INTERNATIONAL STANDARD

ISO/IEC 21411

First edition
2001-08-15

Information technology — Telecommunications and information exchange between systems — Corporate telecommunication networks — Signalling interworking between QSIG and H.323 — Call diversion supplementary services

Technologies de l'information — Télécommunications et échange d'information entre systèmes — Réseaux de télécommunications corporatifs — Signalisation de travail entre QSIG et H.323 — Services supplémentaires de diversion d'appel

Reference number
ISO/IEC 21411:2001(E)

© ISO/IEC 2001

Copyright International Organization for Standardization
Provided by IHS under license with ISO
No reproduction or networking permitted without license from IHS

Not for Resale

PDF disclaimer

This PDF file may contain embedded typefaces. In accordance with Adobe's licensing policy, this file may be printed or viewed but shall not be edited unless the typefaces which are embedded are licensed to and installed on the computer performing the editing. In downloading this file, parties accept therein the responsibility of not infringing Adobe's licensing policy. The ISO Central Secretariat accepts no liability in this area.

Adobe is a trademark of Adobe Systems Incorporated.

Details of the software products used to create this PDF file can be found in the General Info relative to the file; the PDF-creation parameters were optimized for printing. Every care has been taken to ensure that the file is suitable for use by ISO member bodies. In the unlikely event that a problem relating to it is found, please inform the Central Secretariat at the address given below.

© ISO/IEC 2001

All rights reserved. Unless otherwise specified, no part of this publication may be reproduced or utilized in any form or by any means, electronic or mechanical, including photocopying and microfilm, without permission in writing from either ISO at the address below or ISO's member body in the country of the requester.

ISO copyright office
Case postale 56 • CH-1211 Geneva 20
Tel. + 41 22 749 01 11
Fax + 41 22 749 09 47
E-mail copyright@iso.ch
Web www.iso.ch

Printed in Switzerland

--`,,```,,,,````-`-`,,`,,`,`,,`---

© ISO/IEC 2001 – All rights reserved
Copyright International Organization for Standardization
Provided by IHS under license with ISO
No reproduction or networking permitted without license from IHS
Not for Resale

Contents

Foreword		**v**
Introduction		**vi**
1	Scope	**1**
2	Conformance	**1**
3	Normative references	**1**
4	Definitions	**2**
4.1	External definitions	**2**
4.2	Other definitions	**2**
4.2.1	Association D	**2**
4.2.2	Association E	**2**
4.2.3	Association F	**2**
4.2.4	Association G	**2**
4.2.5	Entity A	**2**
4.2.6	Entity B	**2**
4.2.7	Entity B’	**2**
4.2.8	Entity C	**2**
4.2.9	Entity D	**2**
4.2.10	Entity E	**3**
4.2.11	Entity F	**3**
4.2.12	Entity G	**3**
4.2.13	Entity H	**3**
4.2.14	Gateway	**3**
4.2.15	Leg A	**3**
4.2.16	Leg B	**3**
4.2.17	Leg B’	**3**
4.2.18	Leg C	**3**
4.2.19	Rerouting entity	**3**
4.2.20	Scenario A1	**3**
4.2.21	Scenario A2	**3**
4.2.22	Scenario B1	**3**
4.2.23	Scenario B2	**3**
4.2.24	Scenario C1	**3**
4.2.25	Scenario C2	**3**
4.2.26	Scenario D1	**3**
4.2.27	Scenario D2	**3**
4.2.28	Scenario E1	**3**
4.2.29	Scenario E2	**3**
4.2.30	Scenario F1	**3**
4.2.31	Scenario F2	**3**
4.2.32	Scenario G1	**3**
4.2.33	Scenario G2	**3**
5	Acronyms	**4**
6	Service architecture	**4**
6.1	Service architecture for invocation and operation	**4**
6.1.1	ISO/IEC 13873 service architecture	**4**

© ISO/IEC 2001 – All rights reserved

Copyright International Organization for Standardization
Provided by IHS under license with ISO
No reproduction or networking permitted without license from IHS
Not for Resale

6.1.2 H.450.3 service architecture **5**
6.1.3 Scenarios for interworking **5**
6.1.4 Determination of the location of the rerouting entity when interworking **6**

6.2 Service architecture for activation, deactivation and interrogation **6**

6.2.1 ISO/IEC 13873 service architecture **6**
6.2.2 H.450.3 service architecture **7**
6.2.3 Scenarios for interworking **7**

7 Protocol interworking – General requirements **8**

8 Protocol interworking – Messages and APDUs **8**

8.1 Scenario A1 **8**
8.2 Scenario A2 **10**
8.3 Scenario B1 **11**
8.4 Scenario B2 **12**
8.5 Scenario C1 **12**
8.6 Scenario C2 **13**
8.7 Scenario D1 **13**
8.8 Scenario D2 **14**
8.9 Scenario E1 **14**
8.10 Scenario E2 **15**
8.11 Scenario F1 **15**
8.12 Scenario F2 **16**
8.13 Scenario G1 **16**
8.14 Scenario G2 **17**

Annexes

A - Implementation Conformance Statement (ICS) proforma **18**

B - Example message sequence diagrams **28**

© ISO/IEC 2001 – All rights reserved

Copyright International Organization for Standardization
Provided by IHS under license with ISO
No reproduction or networking permitted without license from IHS
Not for Resale

Foreword

ISO (the International Organization for Standardization) and IEC (the International Electrotechnical Commission) form the specialized system for worldwide standardization. National bodies that are members of ISO or IEC participate in the development of International Standards through technical committees established by the respective organization to deal with particular fields of technical activity. ISO and IEC technical committees collaborate in fields of mutual interest. Other international organizations, governmental and non-governmental, in liaison with ISO and IEC, also take part in the work.

International Standards are drafted in accordance with the rules given in the ISO/IEC Directives, Part 3.

In the field of information technology, ISO and IEC have established a joint technical committee, ISO/IEC JTC 1. Draft International Standards adopted by the joint technical committee are circulated to national bodies for voting. Publication as an International Standard requires approval by at least 75 % of the national bodies casting a vote.

Attention is drawn to the possibility that some of the elements of this International Standard may be the subject of patent rights. ISO and IEC shall not be held responsible for identifying any or all such patent rights.

International Standard ISO/IEC 21411 was prepared by ECMA (as ECMA-309) and was adopted, under a special “fast-track procedure”, by Joint Technical Committee ISO/IEC JTC 1, *Information technology*, in parallel with its approval by national bodies of ISO and IEC.

Annex A forms a normative part of this International Standard. Annex B is for information only.

© ISO/IEC 2001 – All rights reserved

Copyright International Organization for Standardization
Provided by IHS under license with ISO
No reproduction or networking permitted without license from IHS
Not for Resale

Introduction

This International Standard is one of a series of Standards defining the interworking of services and signalling protocols deployed in Corporate telecommunication Networks (CNs). The series uses telecommunication concepts as developed by ITU-T and conforms to the framework of International Standards on Open Systems Interconnection as defined by ISO/IEC.

This International Standard defines the signalling protocol interworking for call diversion supplementary services between a Private Integrated Services Network (PISN) and a packet-based private telecommunications network based on the Internet Protocol (IP). It is further assumed that the protocol for the PISN part is that defined for the Q reference point (QSIG) and that the protocols for the IP-based network are based on ITU-T Recommendation H.323.

This International Standard is based upon the practical experience of ECMA member companies and the results of their active and continuous participation in the work of ISO/IEC JTC 1, ITU-T, ETSI and other international and national standardization bodies. It represents a pragmatic and widely based consensus.

© ISO/IEC 2001 – All rights reserved

Copyright International Organization for Standardization
Provided by IHS under license with ISO
No reproduction or networking permitted without license from IHS
Not for Resale

Information technology - Telecommunications and information exchange between systems - Corporate telecommunication networks - Signalling interworking between QSIG and H.323 - Call diversion supplementary services

1 Scope

This International Standard specifies signalling interworking between "QSIG" and "H.323" in support of call diversion supplementary services within a Corporate telecommunication Network (CN).

"QSIG" is a signalling protocol that operates at the Q reference point between Private Integrated Services eXchanges (PINX) within a Private Integrated Services Network (PISN). The Q reference point is defined in ISO/IEC 11579-1. A PISN provides circuit-switched basic services and supplementary services to its users. QSIG is specified in other Standards, in particular ISO/IEC 11572 (call control in support of basic services), ISO/IEC 11582 (generic functional protocol for the support of supplementary services) and a number of standards specifying individual supplementary services. ISO/IEC 13873 specifies the QSIG protocol in support of call diversion services.

"H.323" is a set of signalling protocols for the support of voice or multimedia communication within a packet network, in particular a packet network that uses the Internet Protocol (IP) as its network layer protocol (IP network). H.323 signalling protocols operate between endpoints in an IP network, either indirectly via one or more gatekeepers, or directly. An endpoint can be a terminal or a gateway to another network. H.323 is an "umbrella" recommendation referring to various ITU-T recommendations, in particular Recommendations H.225.0 and H.245 (basic communication capabilities) and Recommendation H.450.1 (generic functional protocol for the support of supplementary services). Recommendation H.450.3 specifies the H.323 protocol in support of call diversion services.

NOTE - H.450.3 applies only to the 1998 version of H.323 (also known as H.323 version 2) and to later versions.

In both ISO/IEC 13873 (QSIG) and ITU-Recommendation H.450.3 (H.323), the call diversion supplementary services are Call Forwarding Unconditional (SS-CFU), Call Forwarding Busy (SS-CFB), Call Forwarding No Reply (SS-CFNR) and Call Deflection (SS-CD). These supplementary services apply during call establishment and provide diversion of an incoming call to another destination.

Interworking between QSIG and H.323 permits a call originating at a user of a PISN to terminate at a user of an IP network, or a call originating at a user of an IP network to terminate at a user of a PISN. This International Standard provides the following additional capabilities:

- a call originating from a PISN and destined for a user of an H.323 network to be diverted by the H.323 network to an alternative destination;
- a call originating from an H.323 network and destined for a user of a PISN to be diverted by the PISN to an alternative destination;
- a call destined for a user of a PISN to be diverted to an alternative destination where that alternative destination is in an H.323 network;
- a call destined for a user of an H.323 network to be diverted to an alternative destination where that alternative destination is in a PISN.

This International Standard is applicable to any interworking unit that can act as a gateway between a PISN employing QSIG and an IP network employing H.323.

2 Conformance

In order to conform to this International Standard, a gateway shall satisfy the requirements identified in the Implementation Conformance Statement (ICS) proforma in annex A.

3 Normative references

The following normative documents contain provisions which, through reference in this text, constitute provisions of this International Standard. For dated references, subsequent amendments to, or revisions of, any of these publications do not apply. However, parties to agreements based on this International Standard are encouraged to investigate the possibility of applying the most recent editions of the normative documents indicated below. For undated references, the latest edition of the normative document referred to applies. Members of ISO and IEC maintain registers of currently valid International Standards.

© ISO/IEC 2001 – All rights reserved

Copyright International Organization for Standardization
Provided by IHS under license with ISO
No reproduction or networking permitted without license from IHS Not for Resale

ISO/IEC 11572:2000, *Information technology - Telecommunications and information exchange between systems - Private Integrated Services Network - Circuit mode bearer services - Inter-exchange signalling procedures and protocol*

ISO/IEC 11579-1:1994, *Information technology - Telecommunications and information exchange between systems - Private integrated services network - Part 1: Reference configuration for PISN Exchanges (PINX)*

ISO/IEC 11582:1995, *Information technology - Telecommunications and information exchange between systems - Private Integrated Services Network - Generic functional protocol for the support of supplementary services - Inter-exchange signalling procedures and protocol*

ISO/IEC 13873:1995, *Information technology - Telecommunications and information exchange between systems - Private Integrated Services Network - Inter-exchange signalling protocol - Call diversion supplementary services*

ISO/IEC 21409:2001, *Information technology - Telecommunications and information exchange between systems - Corporate telecommunication networks - Signalling interworking between QSIG and H.323 - Generic functional protocol for the support of supplementary services*

ITU-T Rec. H.225.0:1998 (or later edition), *Call signalling protocols and media stream packetization for packet-based multimedia communication systems*

ITU-T Rec. H.245:1998 (or later edition), *Control protocol for multimedia communication*

ITU-T Rec. H.323:1998 (or later edition), *Packet-based multimedia communications systems*

ITU-T Rec. H.450.1:1998, *Generic functional protocol for the support of supplementary services in H.323*

ITU-T Rec. H.450.3:1998, *Call diversion supplementary service for H.323*

4 Definitions

For the purposes of this International Standard, the following definitions apply.

4.1 External definitions

This International Standard uses the following terms defined in other documents:

- Call (ISO/IEC 21409)
- Corporate telecommunication Network (CN) (ISO/IEC 21409)
- Endpoint (ITU-T Rec. H.323)
- Gatekeeper (ITU-T Rec. H.323)
- IP network (ISO/IEC 21409)
- Private Integrated Services Network (PISN) (ISO/IEC 21409)
- Private Integrated services Network eXchange (PINX) (ISO/IEC 11579-1)

Additionally the definitions in ISO/IEC 13873 and ITU-T Recommendation H.450.3 apply as appropriate.

4.2 Other definitions

4.2.1 Association D : Signalling association between entity D and entity G.

4.2.2 Association E : Signalling association between entity E and entity G.

4.2.3 Association F : Signalling association between entity F and entity G.

4.2.4 Association G : Signalling association between entity G and entity H.

4.2.5 Entity A : Signalling entity at the PINX or H.323 endpoint serving the calling user (user A).

4.2.6 Entity B : Signalling entity at the PINX serving the diverting user (user B) or H.323 entity that invokes diversion on behalf of user B.

4.2.7 Entity B' : Signalling entity at the H.323 endpoint serving user B.

4.2.8 Entity C : Signalling entity at the PINX or H.323 endpoint serving the diverted-to-user (user C).

4.2.9 Entity D : Signalling entity at the PINX or H.323 endpoint serving an activating user.

© ISO/IEC 2001 – All rights reserved

Copyright International Organization for Standardization
Provided by IHS under license with ISO
No reproduction or networking permitted without license from IHS
Not for Resale

4.2.10 Entity E : Signalling entity at the PINX or H.323 endpoint serving a deactivating user.

4.2.11 Entity F : Signalling entity at the PINX or H.323 endpoint serving an interrogating user.

4.2.12 Entity G : Signalling entity for activation / deactivation / interrogation at a PINX or H.323 endpoint serving a diverting endpoint.

4.2.13 Entity H : Signalling entity for restriction checking at a PINX or H.323 endpoint serving a diverted-to endpoint.

4.2.14 Gateway : A gateway as defined in H.323 specifically for the purpose of interworking with a network employing QSIG.

4.2.15 Leg A : Call segment that lies between entity A and the rerouting entity.

4.2.16 Leg B : Call segment that lies between the rerouting entity and entity B.

4.2.17 Leg B' : Call segment that lies between entity B and entity B'.

4.2.18 Leg C : Call segment that lies between the rerouting entity and entity C.

4.2.19 Rerouting entity : Signalling entity that initiates the rerouting of a call towards user C and clears the call towards user B.

4.2.20 Scenario A1 : Interworking arrangement in which entity A (PINX A) is in the PISN and the rerouting entity is in the IP network.

4.2.21 Scenario A2 : Interworking arrangement in which entity A (endpoint A) is in the IP network and the rerouting entity is in the PISN.

4.2.22 Scenario B1 : Interworking arrangement in which entity B (PINX B) is in the PISN and the rerouting entity is in the IP network.

4.2.23 Scenario B2 : Interworking arrangement in which entity B (diverting endpoint or its gatekeeper) is in the IP network and the rerouting entity is in the PISN.

4.2.24 Scenario C1 : Interworking arrangement in which entity C (PINX C) is in the PISN and the rerouting entity is in the IP network.

4.2.25 Scenario C2 : Interworking arrangement in which entity C (endpoint C) is in the IP network and the rerouting entity is in the PISN.

4.2.26 Scenario D1 : Interworking arrangement in which entity D (PINX D) is in the PISN and entity G (endpoint G) is in the IP network.

4.2.27 Scenario D2 : Interworking arrangement in which entity D (endpoint D) is in the IP network and entity G (PINX G) is in the PISN.

4.2.28 Scenario E1 : Interworking arrangement in which entity E (PINX E) is in the PISN and entity G (endpoint G) is in the IP network.

4.2.29 Scenario E2 : Interworking arrangement in which entity E (endpoint E) is in the IP network and entity G (PINX G) is in the PISN.

4.2.30 Scenario F1 : Interworking arrangement in which entity F (PINX F) is in the PISN and entity G (endpoint G) is in the IP network**.**

4.2.31 Scenario F2 : Interworking arrangement in which entity F (endpoint F) is in the IP network and entity G (PINX G) is in the PISN.

4.2.32 Scenario G1 : Interworking arrangement in which entity G (PINX G) is in the PISN and entity H (endpoint H) is in the IP network.

4.2.33 Scenario G2 : Interworking arrangement in which entity G (endpoint G) is in the IP network and entity H (PINX H) is in the PISN.

© ISO/IEC 2001 – All rights reserved

Copyright International Organization for Standardization
Provided by IHS under license with ISO
No reproduction or networking permitted without license from IHS
Not for Resale

5 Acronyms

APDU	Application Protocol Data Unit
CN	Corporate telecommunication Network
ICS	Implementation Conformance Statement
IP	Internet Protocol
PINX	Private Integrated services Network eXchange
PISN	Private Integrated Services Network
SS-CD	Supplementary Service Call Deflection
SS-CFB	Supplementary Service Call Forwarding Busy
SS-CFNR	Supplementary Service Call Forwarding No Reply
SS-CFU	Supplementary Service Call Forwarding Unconditional

6 Service architecture

6.1 Service architecture for invocation and operation

6.1.1 ISO/IEC 13873 service architecture

The QSIG protocol for call diversion invocation and operation is based around four signalling entities or PINX types:

- entity A – the PINX serving the calling user (user A);
- entity B – the PINX serving the diverting user (user B);
- entity C – the PINX serving the diverted-to user (user C);
- rerouting entity – the PINX that initiates the rerouting of the call towards user C and clears the call towards user B.

Where a user is in another network, the role of entity A, entity B or entity C is performed by the other network, the gateway PINX or the two in combination. However, from the QSIG point of view the role is performed by the gateway PINX.

This can be represented diagrammatically as shown in figure 1.

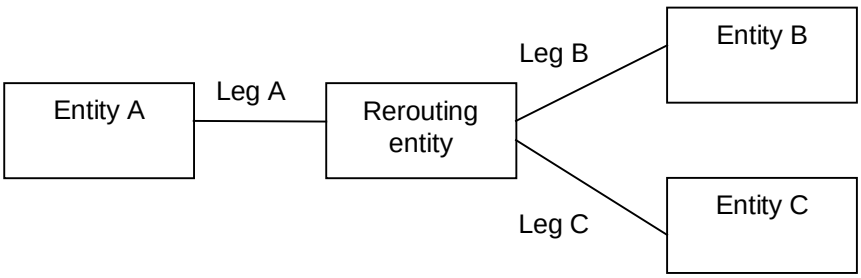

Figure 1 – Call diversion architecture for QSIG

From this it can be seen that there are three segments or “legs” to the call:

- leg A from entity A to the rerouting entity;
- leg B from the rerouting entity to entity B;
- leg C from the rerouting entity to entity C.

The QSIG protocol supports each of these three legs.

The rerouting entity is constrained to be collocated with (in the same PINX as) entity A or entity B (or both if entity A and entity B are collocated). In addition, entity C can be collocated with the rerouting entity (and therefore with entity A and/or entity B). When an entity is collocated with the rerouting entity, the leg of the call concerned is internal to the physical PINX and therefore the QSIG protocol for that leg does not apply.

© ISO/IEC 2001 – All rights reserved

--`,,```,,,,````-`-`,,`,,`,`,,`---
Copyright International Organization for Standardization
Provided by IHS under license with ISO
No reproduction or networking permitted without license from IHS
Not for Resale

6.1.2 H.450.3 service architecture

The architecture shown above for QSIG applies also to H.450.3, except that PINXs are replaced by H.323 entities as follows:

- entity A – the calling endpoint;
- entity B – the entity that invokes diversion on behalf of the diverting user;
- entity B' – the diverting endpoint;
- entity C – the diverted-to endpoint;
- rerouting entity – the entity that initiates the rerouting of the call towards user C and clears the call towards user B.

Where a user is in another network, the role of entity A, entities B and B' or entity C is performed by the other network, the gateway, or the two in combination. However, from the H.450.3 point of view the role is performed by the gateway.

This can be represented diagrammatically as shown in figure 2:

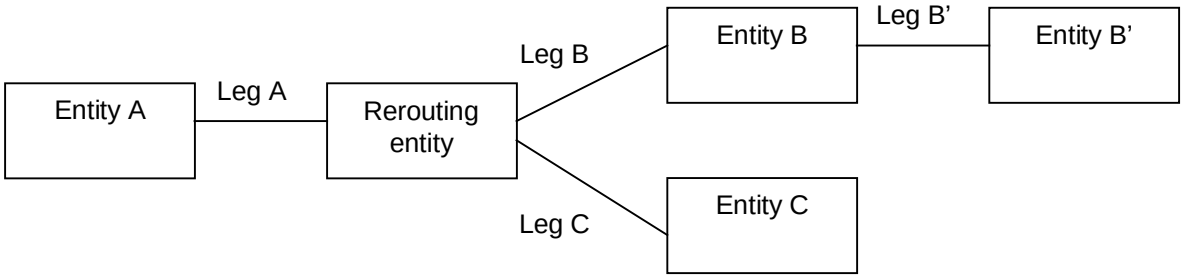

Figure 2 – Call diversion architecture for H.323

From this it can be seen that there are four segments or "legs" to the call:

- leg A from entity A to the rerouting entity;
- leg B from the rerouting entity to entity B;
- leg B' from entity B to entity B';
- leg C from the rerouting entity to entity C.

The H.450.3 protocol supports each of these four legs.

Entity B is either collocated with entity B' at the diverting endpoint or is located separately in a gatekeeper acting on behalf of the diverting endpoint, e.g. for situations where B' is switched off since B' can be a PC.

The rerouting entity can be collocated with entity A or entity B. Alternatively it can be at a separate device such as a gatekeeper or proxy.

6.1.3 Scenarios for interworking

The architectures for QSIG and H.450.3 are very similar. The only difference is the absence of entity B' and leg B' from the QSIG architecture. This is not a fundamental difference, but merely reflects the fact that entity B' and leg B' are outside the scope of QSIG and therefore no QSIG protocol is required for leg B'. Normally leg B' would correspond to the PISN access.

This means that the H.450.3 architecture is applicable to the inter-networking situation between an IP network and a PISN, where one or more of the users involved are served by the IP network and the others are served by the PISN.

In figure 2 interworking between H.450.3 and QSIG could theoretically occur on any of the four legs. However, interworking on leg B' is of less practical use (a network is unlikely to invoke diversion on behalf of a diverting user in another network), and also is not possible because there is no support for leg B' in QSIG. Therefore in practice the possible points of interworking occur on legs A, B and C.

For each of the three possible points of interworking, two scenarios arise, depending on which side of the interworking point the PISN lies. This gives 6 scenarios in total that need to be considered:

- Scenario A1: Entity A (PINX A) in PISN, rerouting entity in IP network;
- Scenario A2: Entity A (endpoint A) in IP network, rerouting entity in PISN;

© ISO/IEC 2001 – All rights reserved

Copyright International Organization for Standardization
Provided by IHS under license with ISO
No reproduction or networking permitted without license from IHS
Not for Resale

- Scenario B1: Entity B (PINX B) in PISN, rerouting entity in IP network;
- Scenario B2: Entity B (diverting endpoint or its gatekeeper) in IP network, rerouting entity in PISN;
- Scenario C1: Entity C (PINX C) in PISN, rerouting entity in IP network;
- Scenario C2: Entity C (endpoint C) in IP network, rerouting entity in PISN.

It is possible for more than one scenario to apply to the same call. For example, if entity A and the rerouting entity are in a PISN and entities B and C are in the same IP network or different IP networks, interworking according to scenario B2 will apply on leg B and interworking according to scenario C2 will apply on leg C.

A point of interworking will be implemented in a gateway, which acts as both an H.323 endpoint from the point of view of the IP network and an end PINX from the point of view of the PISN.

Multiple scenarios can also occur because of multiple (chained) diversions.

6.1.4 Determination of the location of the rerouting entity when interworking

The particular scenario (or scenarios) that applies depends not only on the location of the users concerned but also on the location of the rerouting entity. In each of the scenarios it is possible to locate the rerouting entity within the gateway. However, functionally the rerouting entity is separate from the point of interworking and belongs to user B's network. When this occurs, interworking occurs on leg A (scenario A1 or A2).

The possibility of siting the rerouting entity at the gateway arises when the gateway receives a rerouting request (QSIG or H.450.3 callRerouting invoke APDU) from entity B. Instead of creating a rerouting entity at the gateway, the gateway can choose to pass the rerouting request on into the other network towards entity A. In this case interworking occurs on leg B (scenario B1 or B2).

In either case, interworking can also occur on leg C (scenario C1 or C2) if entity C is not in the same type of network as the rerouting entity.

The gateway's decision whether to provide the rerouting entity is an implementation matter. This can, but need not, take account of the address of user C. The behaviour of the rerouting entity, if provided at the gateway, is outside the scope of this International Standard and is assumed to be in accordance with the requirements of ISO/IEC 13873 (for rerouting requests received from the PISN) or in accordance with the requirements of H.450.3 (for rerouting requests received from the IP network).

6.2 Service architecture for activation, deactivation and interrogation

6.2.1 ISO/IEC 13873 service architecture

The QSIG protocol for call diversion activation, deactivation and interrogation is based around three signalling entities or PINX types:

- entity D – a PINX serving an activating user;
- entity E – a PINX serving a deactivating user;
- entity F – a PINX serving an interrogating user;
- entity G – a PINX serving a diverting user;
- entity H – a PINX serving a diverted-to user.

Where a user is in another network, the role of the entity concerned is performed by the other network, the gateway PINX or the two in combination. However, from the QSIG point of view the role is performed by the gateway PINX.

This can be represented diagrammatically as shown in figure 3.

© ISO/IEC 2001 – All rights reserved

Copyright International Organization for Standardization
Provided by IHS under license with ISO
No reproduction or networking permitted without license from IHS
Not for Resale

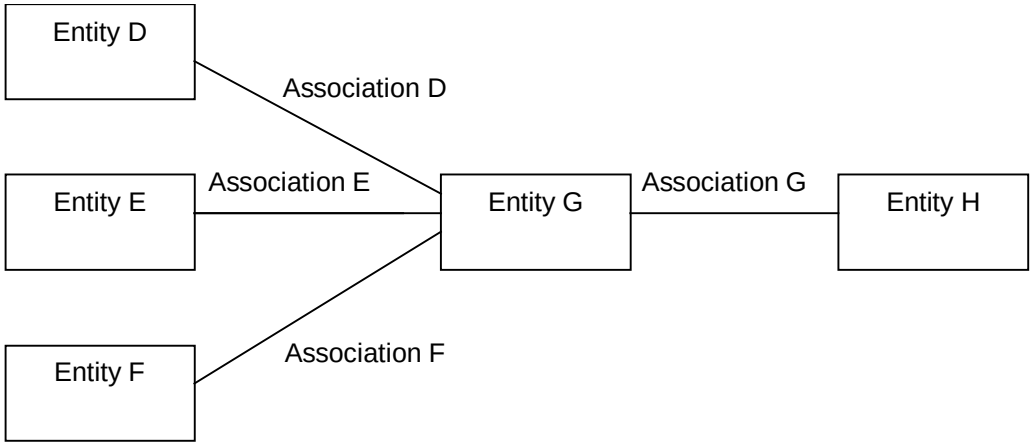

Figure 3 – Call diversion activation / deactivation / interrogation architecture for QSIG

From this it can be seen that there are four associations between entities:

- association D between entity D and entity G;
- association E between entity E and entity G;
- association F between entity F and entity G;
- association G between entity G and entity H.

Associations D, E and F apply to activation, deactivation and interrogation respectively. Association G applies to activation and allows entity G to check with entity H whether there are any restrictions that prevent activation of diversion.

The QSIG protocol supports each of these four associations.

6.2.2 H.450.3 service architecture

The architecture shown above for QSIG applies also to H.450.3, except that PINXs are replaced by H.323 entities as follows:

- entity D – an activating endpoint;
- entity E – a deactivating endpoint;
- entity F – an interrogating endpoint;
- entity G – a diverting endpoint or gatekeeper;
- entity H – a diverted-to endpoint.

Where a user is in another network, the role of the entity concerned is performed by the other network, the gateway, or the two in combination. However, from the H.450.3 point of view the role is performed by the gateway.

As for QSIG, there are four associations: D, E, F and G.

The H.450.3 protocol supports each of these four associations.

6.2.3 Scenarios for interworking

Because the architectures for QSIG and H.450.3 are the same, this architecture is applicable to the inter-networking situation between an IP network and a PISN, where one or more of the users involved are served by the IP network and the others are served by the PISN.

In figure 3, interworking between H.450.3 and QSIG can occur on any of the four associations.

For each of the four possible points of interworking, two scenarios arise, depending on which side of the interworking point the PISN lies. This gives 8 scenarios in total that need to be considered:

- Scenario D1: Entity D (PINX D) in PISN, entity G (endpoint G) in IP network;
- Scenario D2: Entity D (endpoint D) in IP network, entity G (PINX G) in PISN;
- Scenario E1: Entity E (PINX E) in PISN, entity G (endpoint G) in IP network;

© ISO/IEC 2001 – All rights reserved

Copyright International Organization for Standardization
Provided by IHS under license with ISO
No reproduction or networking permitted without license from IHS
Not for Resale

- Scenario E2: Entity E (endpoint E) in IP network, entity G (PINX G) in PISN;
- Scenario F1: Entity F (PINX F) in PISN, entity G (endpoint G) in IP network;
- Scenario F2: Entity F (endpoint F) in IP network, entity G (PINX G) in PISN;
- Scenario G1: Entity G (PINX G) in PISN, entity H (endpoint H) in IP network;
- Scenario G2: Entity G (endpoint G) in IP network, entity H (PINX H) in PISN.

A point of interworking will be implemented in a gateway, which acts as both an H.323 endpoint from the point of view of the IP network and an end PINX from the point of view of the PISN.

7 Protocol interworking – General requirements

Protocol interworking between H.323 and QSIG for call diversion supplementary services shall be in accordance with ISO/IEC 21409, as modified by the requirements of clause 8.

When transmitting an APDU in one protocol as a result of receiving the corresponding APDU in the other protocol, the mapping of elements in the received APDU to corresponding elements in the transmitted APDU shall be in accordance with ISO/IEC 21409, where applicable. Optional elements of one protocol that have no corresponding element in the other protocol shall be discarded if received.

8 Protocol interworking – Messages and APDUs

In the rules specified below for the different scenarios, the following shall apply:

1. If the required action is to transmit a QSIG or H.323 FACILITY message but the call state does not permit a FACILITY message to be sent at that time, the action to be taken is an implementation matter.
2. If the required action is to include an APDU in a transmitted QSIG or H.323 message conditional upon that message being transmitted and that message is not to be transmitted (owing to basic call interworking considerations), the action to be taken is an implementation matter.
3. If the required action is dependent on the call independent signalling connection extending or being able to be extended into the other network and this cannot be achieved, the action to be taken is an implementation matter.

Annex B shows in diagrammatic form some typical message sequences for some of the scenarios identified in this International Standard.

8.1 Scenario A1

A gateway that supports scenario A1 shall behave in accordance with the rules of table 1, by carrying out the required action when a given condition occurs. Each condition applies to the receipt of an H.323 message from a rerouting entity, whether this be located in the gateway or in a separate physical entity in the IP network.

© ISO/IEC 2001 – All rights reserved

Copyright International Organization for Standardization
Provided by IHS under license with ISO
No reproduction or networking permitted without license from IHS
Not for Resale

Table 1 – Message and APDU handling requirements for scenario A1

Rule	Condition	Required action
1	Receipt of an H.323 FACILITY message containing an H.323 divertingLegInformation1 invoke APDU in the backward direction, no H.323 CONNECT message having been received.	Transmit a QSIG FACILITY message containing a QSIG divertingLegInformation1 invoke APDU if the QSIG call state permits.
2	Receipt of an H.323 CONNECT message containing an H.323 divertingLegInformation1 invoke APDU.	If a QSIG CONNECT message is to be transmitted, include in the QSIG CONNECT message a QSIG divertingLegInformation1 invoke APDU.
3	Receipt of an H.323 ALERTING message containing an H.323 divertingLegInformation3 invoke APDU.	If a QSIG ALERTING message is to be transmitted, include in the QSIG ALERTING message a QSIG divertingLegInformation3 invoke APDU.
4	Receipt of an H.323 FACILITY message containing an H.323 divertingLegInformation3 invoke APDU in the backward direction, no H.323 CONNECT message having been received.	Transmit a QSIG FACILITY message containing a QSIG divertingLegInformation3 invoke APDU if the QSIG call state permits.
5	Receipt of an H.323 CONNECT message containing an H.323 divertingLegInformation3 invoke APDU.	If a QSIG CONNECT message is to be transmitted, include in the QSIG CONNECT message a QSIG divertingLegInformation3 invoke APDU.

© ISO/IEC 2001 – All rights reserved

Copyright International Organization for Standardization
Provided by IHS under license with ISO
No reproduction or networking permitted without license from IHS
Not for Resale

8.2 Scenario A2

A gateway that supports scenario A2 shall behave in accordance with the rules of table 2, by carrying out the required action when a given condition occurs. Each condition applies to the receipt of a QSIG message from a rerouting entity, whether this be located in the gateway or in a separate physical entity in the PISN.

Table 2 – Message and APDU handling requirements for scenario A2

Rule	Condition	Required action
1	Receipt of a QSIG FACILITY message containing a QSIG divertingLegInformation1 invoke APDU in the backward direction, no QSIG CONNECT message having been received.	Transmit an H.323 FACILITY message containing an H.323 divertingLegInformation1 invoke APDU if the H.323 call state permits.
2	Receipt of a QSIG CONNECT message containing a QSIG divertingLegInformation1 invoke APDU.	If an H.323 CONNECT message is to be transmitted, include in the H.323 CONNECT message an H.323 divertingLegInformation1 invoke APDU.
3	Receipt of a QSIG ALERTING message containing a QSIG divertingLegInformation3 invoke APDU.	If an H.323 ALERTING message is to be transmitted, include in the H.323 ALERTING message an H.323 divertingLegInformation3 invoke APDU.
4	Receipt of a QSIG FACILITY message containing a QSIG divertingLegInformation3 invoke APDU in the backward direction, no QSIG CONNECT message having been received.	Transmit an H.323 FACILITY message containing an H.323 divertingLegInformation3 invoke APDU if the H.323 call state permits.
5	Receipt of a QSIG CONNECT message containing a QSIG divertingLegInformation3 invoke APDU.	If an H.323 CONNECT message is to be transmitted, include in the H.323 CONNECT message an H.323 divertingLegInformation3 invoke APDU.
6	Receipt of a QSIG NOTIFY message containing notification “call is diverting” (NOTE 1). This can be accompanied by notification “pss1IeNotification” with embedded public ISDN Redirection number information element.	Transmit an H.323 FACILITY message containing an H.323 divertingLegInformation1 invoke APDU if the H.323 call state permits (NOTE 2).
7	Receipt of a QSIG CONNECT message containing no QSIG divertingLegInformation3 invoke APDU, subsequent to transmitting an H.323 FACILITY message containing an H.323 divertingLegInformation1 invoke APDU in accordance with rule 6.	If an H.323 CONNECT message is to be transmitted, include in the H.323 CONNECT message an H.323 divertingLegInformation3 invoke APDU.

NOTE 1 - This can arise as a result of the PISN routing the call on into a public ISDN, where diversion occurs.

NOTE 2 - If no embedded public ISDN Redirection number information element is received, mandatory element nominatedNr in the H.323 divertingLegInformation1 invoke APDU shall be coded to indicate that no address is available.

© ISO/IEC 2001 – All rights reserved

Copyright International Organization for Standardization
Provided by IHS under license with ISO
No reproduction or networking permitted without license from IHS
Not for Resale

8.3 Scenario B1

A gateway that supports scenario B1 shall behave in accordance with the rules of table 3, by carrying out the required action when a given condition occurs. Each condition applies to the receipt of an H.323 message from a rerouting entity, whether this be located in the gateway or in a separate physical entity in the IP network, or the receipt of a QSIG message from entity B.

Table 3 – Message and APDU handling requirements for scenario B1

Rule	Condition	Required action
1	Receipt of a QSIG FACILITY message containing a QSIG callRerouting invoke APDU in the backward direction, no QSIG CONNECT message having been received.	Transmit an H.323 FACILITY message containing an H.323 callRerouting invoke APDU if the H.323 call state permits.
2	Receipt of an H.323 FACILITY message containing an H.323 callRerouting return result APDU in response to an H.323 callRerouting invoke APDU.	Transmit a QSIG FACILITY message containing a QSIG callRerouting return result APDU if the QSIG call state permits.
3	Receipt of an H.323 RELEASE COMPLETE message containing an H.323 callRerouting return result APDU in response to an H.323 callRerouting invoke APDU.	Transmit a QSIG DISCONNECT message containing a QSIG callRerouting return result APDU if the QSIG call state permits.
4	Receipt of an H.323 FACILITY message containing an H.323 callRerouting return error APDU in response to an H.323 callRerouting invoke APDU.	Transmit a QSIG FACILITY message containing a QSIG callRerouting return error APDU if the QSIG call state permits.
5	Receipt of an H.323 RELEASE COMPLETE message containing an H.323 callRerouting return error APDU in response to an H.323 callRerouting invoke APDU.	Transmit a QSIG DISCONNECT message containing a QSIG callRerouting return error APDU if the QSIG call state permits.
6	Receipt of an H.323 FACILITY message containing an H.323 cfnrDivertedLegFailed invoke APDU in the forward direction	Transmit a QSIG FACILITY message containing a QSIG cfnrDivertedLegFailed invoke APDU if the QSIG call state permits.

© ISO/IEC 2001 – All rights reserved

Copyright International Organization for Standardization
Provided by IHS under license with ISO
No reproduction or networking permitted without license from IHS
Not for Resale

8.4 Scenario B2

A gateway that supports scenario B2 shall behave in accordance with the rules of table 4, by carrying out the required action when a given condition occurs. Each condition applies to the receipt of a QSIG message from a rerouting entity, whether this be located in the gateway or in a separate physical entity in the PISN, or receipt of an H.323 message from entity B.

Table 4 – Message and APDU handling requirements for scenario B2

Rule	Condition	Required action
1	Receipt of an H.323 FACILITY message containing an H.323 callRerouting invoke APDU in the backward direction, no H.323 CONNECT message having been received.	Transmit a QSIG FACILITY message containing a QSIG callRerouting invoke APDU if the QSIG call state permits.
2	Receipt of a QSIG FACILITY message containing a QSIG callRerouting return result APDU in response to a QSIG callRerouting invoke APDU.	Transmit an H.323 FACILITY message containing an H.323 callRerouting return result APDU if the H.323 call state permits.
3	Receipt of a QSIG DISCONNECT message containing a QSIG callRerouting return result APDU in response to a QSIG callRerouting invoke APDU.	Transmit an H.323 RELEASE COMPLETE message containing an H.323 callRerouting return result APDU if the H.323 call state permits.
4	Receipt of a QSIG FACILITY message containing a QSIG callRerouting return error APDU in response to a QSIG callRerouting invoke APDU.	Transmit an H.323 FACILITY message containing an H.323 callRerouting return error APDU if the H.323 call state permits.
4	Receipt of a QSIG DISCONNECT message containing a QSIG callRerouting return error APDU in response to a QSIG callRerouting invoke APDU.	Transmit an H.323 RELEASE COMPLETE message containing an H.323 callRerouting return error APDU if the H.323 call state permits.
6	Receipt of a QSIG FACILITY message containing a QSIG cfnrDivertedLegFailed invoke APDU in the forward direction.	Transmit an H.323 FACILITY message containing an H.323 cfnrDivertedLegFailed invoke APDU if the H.323 call state permits.

8.5 Scenario C1

A gateway that supports scenario C1 shall behave in accordance with the rules of table 5, by carrying out the required action when a given condition occurs. Each condition applies to the receipt of an H.323 message from a rerouting entity, whether this be located in the gateway or in a separate physical entity in the IP network, or receipt of a QSIG message from entity C.

Table 5 – Message and APDU handling requirements for scenario C1

Rule	Condition	Required action
1	Receipt of an H.323 SETUP message containing an H.323 divertingLegInformation2 invoke APDU.	If a QSIG SETUP message is to be transmitted, include in the QSIG SETUP message a QSIG divertingLegInformation2 invoke APDU.
2	Receipt of a QSIG ALERTING message containing a QSIG divertingLegInformation3 invoke APDU.	If an H.323 ALERTING message is to be transmitted, include in the H.323 ALERTING message an H.323 divertingLegInformation3 invoke APDU.
3	Receipt of a QSIG FACILITY message containing a QSIG divertingLegInformation3 invoke APDU in the backward direction, no QSIG CONNECT message having been received.	Transmit an H.323 FACILITY message containing an H.323 divertingLegInformation3 invoke APDU if the H.323 call state permits.
4	Receipt of a QSIG CONNECT message containing a QSIG divertingLegInformation3 invoke APDU.	If an H.323 CONNECT message is to be transmitted, include in the H.323 CONNECT message an H.323 divertingLegInformation3 invoke APDU.

© ISO/IEC 2001 – All rights reserved

Copyright International Organization for Standardization
Provided by IHS under license with ISO
No reproduction or networking permitted without license from IHS Not for Resale

8.6 Scenario C2

A gateway that supports scenario C2 shall behave in accordance with the rules of table 6, by carrying out the required action when a given condition occurs. Each condition applies to the receipt of a QSIG message from a rerouting entity, whether this be located in the gateway or in a separate physical entity in the PISN, or the receipt of an H.323 message from entity C.

Table 6 – Message and APDU handling requirements for scenario C2

Rule	Condition	Required action
1	Receipt of a QSIG SETUP message containing a QSIG divertingLegInformation2 invoke APDU.	If an H.323 SETUP message is to be transmitted, include in the H.323 SETUP message an H.323 divertingLegInformation2 invoke APDU.
2	Receipt of an H.323 ALERTING message containing an H.323 divertingLegInformation3 invoke APDU.	If a QSIG ALERTING message is to be transmitted, include in the QSIG ALERTING message a QSIG divertingLegInformation3 invoke APDU.
3	Receipt of an H.323 FACILITY message containing an H.323 divertingLegInformation3 invoke APDU in the backward direction, no QSIG CONNECT message having been received.	Transmit a QSIG FACILITY message containing a QSIG divertingLegInformation3 invoke APDU if the QSIG call state permits.
4	Receipt of an H.323 CONNECT message containing an H.323 divertingLegInformation3 invoke APDU.	If a QSIG CONNECT message is to be transmitted, include in the QSIG CONNECT message a QSIG divertingLegInformation3 invoke APDU.

8.7 Scenario D1

A gateway that supports scenario D1 shall behave in accordance with the rules of table 7, by carrying out the required action when a given condition occurs. Each condition applies to the receipt of a QSIG message from entity D or an H.323 message from entity G.

Table 7 – Message and APDU handling requirements for scenario D1

Rule	Condition	Required action
1	Receipt of a QSIG activateDiversionQ invoke APDU carried on a call independent signalling connection.	If the call independent signalling connection extends or is able to be extended into the IP network, transmit an H.323 activateDiversionQ invoke APDU.
2	Receipt of an H.323 activateDiversionQ return result APDU carried on a call independent signalling connection in response to an H.323 activateDiversionQ invoke APDU.	Transmit a QSIG activateDiversionQ return result APDU.
3	Receipt of an H.323 activateDiversionQ return error APDU carried on a call independent signalling connection in response to an H.323 activateDiversionQ invoke APDU.	Transmit a QSIG activateDiversionQ return error APDU.

© ISO/IEC 2001 – All rights reserved

--`,,```,,,,````-`-`,,`,,`,`,,`---
Copyright International Organization for Standardization
Provided by IHS under license with ISO
No reproduction or networking permitted without license from IHS
Not for Resale

8.8 Scenario D2

A gateway that supports scenario D2 shall behave in accordance with the rules of table 8, by carrying out the required action when a given condition occurs. Each condition applies to the receipt of an H.323 message from entity D or a QSIG message from entity G.

Table 8 – Message and APDU handling requirements for scenario D2

Rule	Condition	Required action
1	Receipt of an H.323 activateDiversionQ invoke APDU carried on a call independent signalling connection.	If the call independent signalling connection extends or is able to be extended into the PISN, transmit a QSIG activateDiversionQ invoke APDU.
2	Receipt of a QSIG activateDiversionQ return result APDU carried on a call independent signalling connection in response to a QSIG activateDiversionQ invoke APDU.	Transmit an H.323 activateDiversionQ return result APDU.
3	Receipt of a QSIG activateDiversionQ return error APDU carried on a call independent signalling connection in response to a QSIG activateDiversionQ invoke APDU.	Transmit an H.323 activateDiversionQ return error APDU.

8.9 Scenario E1

A gateway that supports scenario E1 shall behave in accordance with the rules of table 9, by carrying out the required action when a given condition occurs. Each condition applies to the receipt of a QSIG message from entity E or an H.323 message from entity G.

Table 9 – Message and APDU handling requirements for scenario E1

Rule	Condition	Required action
1	Receipt of a QSIG deactivateDiversionQ invoke APDU carried on a call independent signalling connection.	If the call independent signalling connection extends or is able to be extended into the IP network, transmit an H.323 deactivateDiversionQ invoke APDU.
2	Receipt of an H.323 deactivateDiversionQ return result APDU carried on a call independent signalling connection in response to an H.323 deactivateDiversionQ invoke APDU.	Transmit a QSIG deactivateDiversionQ return result APDU.
3	Receipt of an H.323 deactivateDiversionQ return error APDU carried on a call independent signalling connection in response to an H.323 deactivateDiversionQ invoke APDU.	Transmit a QSIG deactivateDiversionQ return error APDU.

© ISO/IEC 2001 – All rights reserved

--`,,```,,,,````-`-`,,`,,`,`,,`---

Copyright International Organization for Standardization
Provided by IHS under license with ISO
No reproduction or networking permitted without license from IHS
Not for Resale

8.10 Scenario E2

A gateway that supports scenario E2 shall behave in accordance with the rules of table 10, by carrying out the required action when a given condition occurs. Each condition applies to the receipt of an H.323 message from entity E or a QSIG message from entity G.

Table 10 – Message and APDU handling requirements for scenario E2

Rule	Condition	Required action
1	Receipt of an H.323 deactivateDiversionQ invoke APDU carried on a call independent signalling connection	If the call independent signalling connection extends or is able to be extended into the PISN, transmit a QSIG deactivateDiversionQ invoke APDU.
2	Receipt of a QSIG deactivateDiversionQ return result APDU carried on a call independent signalling connection in response to a QSIG deactivateDiversionQ invoke APDU.	Transmit an H.323 deactivateDiversionQ return result APDU.
3	Receipt of a QSIG deactivateDiversionQ return error APDU carried on a call independent signalling connection in response to a QSIG deactivateDiversionQ invoke APDU.	Transmit an H.323 deactivateDiversionQ return error APDU.

8.11 Scenario F1

A gateway that supports scenario F1 shall behave in accordance with the rules of table 11, by carrying out the required action when a given condition occurs. Each condition applies to the receipt of a QSIG message from entity F or an H.323 message from entity G.

Table 11 – Message and APDU handling requirements for scenario F1

Rule	Condition	Required action
1	Receipt of a QSIG interrogateDiversionQ invoke APDU carried on a call independent signalling connection.	If the call independent signalling connection extends or is able to be extended into the IP network, transmit an H.323 interrogateDiversionQ invoke APDU.
2	Receipt of an H.323 interrogateDiversionQ return result APDU carried on a call independent signalling connection in response to an H.323 interrogateDiversionQ invoke APDU.	Transmit a QSIG interrogateDiversionQ return result APDU.
3	Receipt of an H.323 interrogateDiversionQ return error APDU carried on a call independent signalling connection in response to an H.323 interrogateDiversionQ invoke APDU.	Transmit a QSIG interrogateDiversionQ return error APDU.

© ISO/IEC 2001 – All rights reserved

Copyright International Organization for Standardization
Provided by IHS under license with ISO
No reproduction or networking permitted without license from IHS
Not for Resale

8.12 Scenario F2

A gateway that supports scenario F2 shall behave in accordance with the rules of table 12, by carrying out the required action when a given condition occurs. Each condition applies to the receipt of an H.323 message from entity F or a QSIG message from entity G.

Table 12 – Message and APDU handling requirements for scenario F2

Rule	Condition	Required action
1	Receipt of an H.323 interrogateDiversionQ invoke APDU carried on a call independent signalling connection.	If the call independent signalling connection extends or is able to be extended into the PISN, transmit a QSIG interrogateDiversionQ invoke APDU.
2	Receipt of a QSIG interrogateDiversionQ return result APDU carried on a call independent signalling connection in response to a QSIG interrogateDiversionQ invoke APDU.	Transmit an H.323 interrogateDiversionQ return result APDU.
3	Receipt of a QSIG interrogateDiversionQ return error APDU carried on a call independent signalling connection in response to a QSIG interrogateDiversionQ invoke APDU.	Transmit an H.323 interrogateDiversionQ return error APDU.

8.13 Scenario G1

A gateway that supports scenario G1 shall behave in accordance with the rules of table 13, by carrying out the required action when a given condition occurs. Each condition applies to the receipt of a QSIG message from entity G or an H.323 message from entity H.

Table 13 – Message and APDU handling requirements for scenario G1

Rule	Condition	Required action
1	Receipt of a QSIG checkRestriction invoke APDU carried on a call independent signalling connection.	If the call independent signalling connection extends or is able to be extended into the IP network, transmit an H.323 checkRestriction invoke APDU.
2	Receipt of an H.323 checkRestriction return result APDU carried on a call independent signalling connection in response to an H.323 checkRestriction invoke APDU.	Transmit a QSIG checkRestriction return result APDU.
3	Receipt of an H.323 checkRestriction return error APDU carried on a call independent signalling connection in response to an H.323 checkRestriction invoke APDU.	Transmit a QSIG checkRestriction return error APDU.

© ISO/IEC 2001 – All rights reserved

Copyright International Organization for Standardization
Provided by IHS under license with ISO
No reproduction or networking permitted without license from IHS
Not for Resale

8.14 Scenario G2

A gateway that supports scenario G2 shall behave in accordance with the rules of table 14, by carrying out the required action when a given condition occurs. Each condition applies to the receipt of an H.323 message from entity G or a QSIG message from entity H.

Table 14 – Message and APDU handling requirements for scenario G2

Rule	Condition	Required action
1	Receipt of an H.323 checkRestriction invoke APDU carried on a call independent signalling connection.	If the call independent signalling connection extends or is able to be extended into the PISN, transmit a QSIG checkRestriction invoke APDU.
2	Receipt of a QSIG checkRestriction return result APDU carried on a call independent signalling connection in response to a QSIG checkRestriction invoke APDU.	Transmit an H.323 checkRestriction return result APDU.
3	Receipt of a QSIG checkRestriction return error APDU carried on a call independent signalling connection in response to a QSIG checkRestriction invoke APDU.	Transmit an H.323 checkRestriction return error APDU.

© ISO/IEC 2001 – All rights reserved

Copyright International Organization for Standardization
Provided by IHS under license with ISO
No reproduction or networking permitted without license from IHS
Not for Resale

Annex A

(normative)

Implementation Conformance Statement (ICS) proforma

A.1 Introduction

A.1.1 Purpose of an ICS proforma

The supplier of an implementation which is claimed to conform to this International Standard shall complete the following Implementation Conformance Statement (ICS) proforma.

A completed ICS proforma is the ICS for the implementation in question. The ICS is a statement of which capabilities and options have been implemented for a given specification.

The ICS can have a number of uses, including use:

– by the implementor, as a check list for implementations to reduce the risk of unintended non-conformance, e.g. through oversight;

– by the supplier and acquirer, or potential acquirer, of the implementation, as a detailed indication of the capabilities of the implementation, stated relative to the common basis for understanding provided by the Standard's ICS proforma;

– by the user or potential user of the implementation, as a basis for initially checking the possibility of interworking with another implementation - while interworking can never be guaranteed, failure to interwork can often be predicted from incompatible ICS;

– by a tester, as the basis for selecting appropriate tests against which to assess the claim for conformance of the implementation.

A.2 Instructions for completing the ICS proforma

A.2.1 General structure of the ICS proforma

The ICS proforma is a fixed format questionnaire divided into sub-clauses each containing a group of individual items. Each item is identified by an item reference, the description of the item (question to be answered), and the reference(s) to the clause(s) that specifies (specify) the item in the main body of this International Standard.

The "Conditions for Status" column contains a specification, if appropriate, of the predicate upon which a conditional status is based. The indication of an item reference in this column indicates a simple-predicate condition (support of this item is dependent on the support marked for the referenced item).

The “Status” column indicates whether an item is applicable and if so whether support is mandatory or optional. The following terms are used:

I — irrelevant or out-of-scope - this capability is outside the scope of the standard to which this ICS proforma applies and is not subject to conformance testing in this context;

M — mandatory (the capability is required for conformance to the standard);

N/A — not applicable - in the given context, it is impossible to use the capability; no answer in the support column is required;

O — optional (the capability is not required for conformance to the standard, but if the capability is implemented it is required to conform to the specification in this International Standard);

© ISO/IEC 2001 – All rights reserved

Copyright International Organization for Standardization
Provided by IHS under license with ISO
No reproduction or networking permitted without license from IHS
Not for Resale

O.<n> qualified optional - in this case, <n> is an integer that identifies a unique group of related optional items; if no additional qualification is indicated, the support of at least one of the optional items is required for conformance to this International Standard; otherwise, the qualification and logic of the selection among the optional items is defined below the table explicitly;

X excluded or prohibited - there is a requirement not to use this capability in a given context.

Answers to the questionnaire items are to be provided in the “Support” column, by simply marking an answer to indicate a restricted choice (Yes, No or N/A). In specific cases, the indication of explicit values may be requested. Where a support column box is left blank, no answer is required.

If a "prerequisite line" (see A.2.4 below) is used after a subclause heading or table title, and its predicate is false, no answer is required for the whole subclause or table, respectively.

A.2.2 Additional Information

Items of Additional Information allow a supplier to provide further information intended to assist the interpretation of the ICS. It is not intended or expected that a large quantity will be supplied, and an ICS can be considered complete without any such information. Examples might be an outline of the ways in which a (single) implementation can be set up to operate in a variety of environments and configurations.

References to items of Additional Information may be entered next to any answer in the questionnaire, and may be included in items of Exception Information.

A.2.3 Exception Information

It may occasionally happen that a supplier will wish to answer an item with mandatory or prohibited status (after any conditions have been applied) in a way that conflicts with the indicated requirement. No pre-printed answer will be found in the Support column for this. Instead, the supplier is required to write into the support column an x.<i> reference to an item of Exception Information, and to provide the appropriate rationale in the Exception item itself.

An implementation for which an Exception item is required in this way does not conform to this International Standard. A possible reason for the situation described above is that a defect in the standard has been reported, a correction for which is expected to change the requirement not met by the implementation.

A.2.4 Further indications of the ICS proforma tables

In addition to the columns of a table, the following information may be indicated:

"Prerequisite line"

A prerequisite line after a subclause heading or table title indicates that the whole subclause or the whole table is not required to be completed if the predicate is false.

"Qualification"

At the end of a table, a detailed qualification for a group of optional items may be indicated, as specified in the description of the status "qualified optional" in subclause in A.2.1.

"Comments"

This box at the end of a table allows a supplier to enter any comments to that table. Comments may also be provided separately (without using this box).

© ISO/IEC 2001 – All rights reserved

--`,,```,,,,````-`-`,,`,,`,`,,`---

Copyright International Organization for Standardization
Provided by IHS under license with ISO
No reproduction or networking permitted without license from IHS

Not for Resale

A.3 Identification of the Implementation

A.3.1 Implementation Identification

Supplier (Note 1)	
Contact point for queries about the ICS (Note 1)	
Implementation Name(s) and Version(s) (Note 1, Note 2)	
Other information necessary for full identification - e.g., name(s) and version(s) for machines and/or operating systems; System name(s)	

NOTE 1 - Only the first three items are required for all implementations; other information may be completed as appropriate in meeting the requirement for full identification.

NOTE 2 - The terms Name and Version should be interpreted appropriately to correspond with a suppliers terminology (e.g. Type, Series, Model).

A.3.2 Specification for which this ICS applies

Title	Corporate telecommunication networks – Signalling interworking between QSIG and H.323 – Generic functional protocol for the support of supplementary services
Version	1.0
Corrigenda Implemented (if applicable)	
Addenda Implemented (if applicable)	
Amendments Implemented (if applicable)	
Have any exception items been required ?	No[ ]Yes[ ] (The answer Yes means that the implementation does not conform to this International Standard) (Note)
Date of Statement	
NOTE: In this case, an explanation shall be given of the nature of non-conformance either below or on a separate sheet of paper. Nature of non-conformance (if applicable):	

© ISO/IEC 2001 – All rights reserved

Copyright International Organization for Standardization
Provided by IHS under license with ISO
No reproduction or networking permitted without license from IHS
Not for Resale

A.4 Major capabilities

Table A.1 - Major capabilities

Item	Question: Does the implementation...	Conditions for status	Status	Reference	Support
MC 1	support rerouting entity functionality for handling rerouting requests received from the PISN		O	6.1.4	[ ]Yes [ ]No
MC 2	support rerouting entity functionality for handling rerouting requests received from the IP network		O	6.1.4	[ ]Yes [ ]No
MC 3	support scenario A1		M	6.1.3	[ ]Yes
MC 4	support scenario A2		M	6.1.3	[ ]Yes
MC 5	support scenario B1	MC1 NOT MC1	O M	6.1.3	[ ]Yes [ ]No [ ]Yes
MC 6	support scenario B2	MC2 NOT MC2	O M	6.1.3	[ ]Yes [ ]No [ ]Yes
MC 7	support scenario C1		M	6.1.3	[ ]Yes
MC 8	support scenario C2		M	6.1.3	[ ]Yes
MC9	support scenarios D1 and D2 (remote activation)		O	6.2.3	[ ]Yes [ ]No
MC10	support scenarios E1 and E2 (remote deactivation)		O	6.2.3	[ ]Yes [ ]No
MC11	support scenarios F1 and F2 (remote interrogation)		O	6.2.3	[ ]Yes [ ]No
MC12	support scenarios G1 and G2 (remote restriction checking for activation)		O	6.2.3	[ ]Yes [ ]No
Comments:					

A.5 General requirements

Table A.2 - General requirements for protocol interworking

Item	Question: Does the implementation...	Conditions for status	Status	Reference	Support
GR1	perform protocol interworking in accordance with ISO/IEC 21409		M	7	[ ]Yes
Comments:					

© ISO/IEC 2001 – All rights reserved

Copyright International Organization for Standardization
Provided by IHS under license with ISO
No reproduction or networking permitted without license from IHS
Not for Resale

A.6 Message and APDU handling

A.6.1 Message and APDU handling for scenario A1

Table A.3 - Message and APDU handling for scenario A1

Item	Question: Does the implementation...	Conditions for status	Status	Reference	Support
MA1 1	behave in accordance with rule 1 for scenario A1		M	8.1	[ ]Yes
MA1 2	behave in accordance with rule 2 for scenario A1		M	8.1	[ ]Yes
MA1 3	behave in accordance with rule 3 for scenario A1		M	8.1	[ ]Yes
MA1 4	behave in accordance with rule 4 for scenario A1		M	8.1	[ ]Yes
MA1 5	behave in accordance with rule 5 for scenario A1		M	8.1	[ ]Yes
Comments:					

A.6.2 Message and APDU handling for scenario A2

Table A.4 - Message and APDU handling for scenario A2

Item	Question: Does the implementation...	Conditions for status	Status	Reference	Support
MA2 1	behave in accordance with rule 1 for scenario A2		M	8.2	[ ]Yes
MA2 2	behave in accordance with rule 2 for scenario A2		M	8.2	[ ]Yes
MA2 3	behave in accordance with rule 3 for scenario A2		M	8.2	[ ]Yes
MA2 4	behave in accordance with rule 4 for scenario A2		M	8.2	[ ]Yes
MA2 5	behave in accordance with rule 5 for scenario A2		M	8.2	[ ]Yes
MA2 6	behave in accordance with rule 6 for scenario A2		M	8.2	[ ]Yes
MA2 7	behave in accordance with rule 7 for scenario A2		M	8.2	[ ]Yes
MA2 8	behave in accordance with rule 8 for scenario A2		M	8.2	[ ]Yes
Comments:					

© ISO/IEC 2001 – All rights reserved

Copyright International Organization for Standardization
Provided by IHS under license with ISO
No reproduction or networking permitted without license from IHS
Not for Resale

A.6.3 Message and APDU handling for scenario B1

Table A.5 - Message and APDU handling for scenario B1

Item	Question: Does the implementation...	Conditions for status	Status	Reference	Support
MB1 1	behave in accordance with rule 1 for scenario B1	MC5	M	8.3	[ ]Yes
MB1 2	behave in accordance with rule 2 for scenario B1	MC5	M	8.3	[ ]Yes
MB1 3	behave in accordance with rule 3 for scenario B1	MC5	M	8.3	[ ]Yes
MB1 4	behave in accordance with rule 4 for scenario B1	MC5	M	8.3	[ ]Yes
Comments:					

A.6.4 Message and APDU handling for scenario B2

Table A.6 - Message and APDU handling for scenario B2

Item	Question: Does the implementation...	Conditions for status	Status	Reference	Support
MB2 1	behave in accordance with rule 1 for scenario B2	MC6	M	8.4	[ ]Yes
MB2 2	behave in accordance with rule 2 for scenario B2	MC6	M	8.4	[ ]Yes
MB2 3	behave in accordance with rule 3 for scenario B2	MC6	M	8.4	[ ]Yes
MB2 4	behave in accordance with rule 4 for scenario B2	MC6	M	8.4	[ ]Yes
Comments:					

© ISO/IEC 2001 – All rights reserved

Copyright International Organization for Standardization
Provided by IHS under license with ISO
No reproduction or networking permitted without license from IHS
Not for Resale

A.6.5 Message and APDU handling for scenario C1

Table A.7 - Message and APDU handling for scenario C1

Item	Question: Does the implementation...	Conditions for status	Status	Reference	Support
MC1 1	behave in accordance with rule 1 for scenario C1		M	8.5	[ ]Yes
MC1 2	behave in accordance with rule 2 for scenario C1		M	8.5	[ ]Yes
MC1 3	behave in accordance with rule 3 for scenario C1		M	8.5	[ ]Yes
MC1 4	behave in accordance with rule 4 for scenario C1		M	8.5	[ ]Yes
Comments:					

A.6.6 Message and APDU handling for scenario C2

Table A.8 - Message and APDU handling for scenario C2

Item	Question: Does the implementation...	Conditions for status	Status	Reference	Support
MC2 1	behave in accordance with rule 1 for scenario C2		M	8.6	[ ]Yes
MC2 2	behave in accordance with rule 2 for scenario C2		M	8.6	[ ]Yes
MC2 3	behave in accordance with rule 3 for scenario C2		M	8.6	[ ]Yes
MC2 4	behave in accordance with rule 4 for scenario C2		M	8.6	[ ]Yes
Comments:					

© ISO/IEC 2001 – All rights reserved

Copyright International Organization for Standardization
Provided by IHS under license with ISO
No reproduction or networking permitted without license from IHS
Not for Resale

A.6.7 Message and APDU handling for scenario D1

Table A.9 - Message and APDU handling for scenario D1

Item	Question: Does the implementation...	Conditions for status	Status	Reference	Support
MD1 1	behave in accordance with rule 1 for scenario D1	MC9	M	8.7	[ ]Yes
MD1 2	behave in accordance with rule 2 for scenario D1	MC9	M	8.7	[ ]Yes
MD1 3	behave in accordance with rule 3 for scenario D1	MC9	M	8.7	[ ]Yes
Comments:					

A.6.8 Message and APDU handling for scenario D2

Table A.10 - Message and APDU handling for scenario D2

Item	Question: Does the implementation...	Conditions for status	Status	Reference	Support
MD2 1	behave in accordance with rule 1 for scenario D2	MC9	M	8.8	[ ]Yes
MD2 2	behave in accordance with rule 2 for scenario D2	MC9	M	8.8	[ ]Yes
MD2 3	behave in accordance with rule 3 for scenario D2	MC9	M	8.8	[ ]Yes
Comments:					

A.6.9 Message and APDU handling for scenario E1

Table A.11 - Message and APDU handling for scenario E1

Item	Question: Does the implementation...	Conditions for status	Status	Reference	Support
ME1 1	behave in accordance with rule 1 for scenario E1	MC10	M	8.9	[ ]Yes
ME1 2	behave in accordance with rule 2 for scenario E1	MC10	M	8.9	[ ]Yes
ME1 3	behave in accordance with rule 3 for scenario E1	MC10	M	8.9	[ ]Yes
Comments:					

© ISO/IEC 2001 – All rights reserved

Copyright International Organization for Standardization
Provided by IHS under license with ISO
No reproduction or networking permitted without license from IHS
Not for Resale

A.6.10 Message and APDU handling for scenario E2

Table A.12 - Message and APDU handling for scenario E2

Item	Question: Does the implementation...	Conditions for status	Status	Reference	Support
ME2 1	behave in accordance with rule 1 for scenario E2	MC10	M	8.10	[ ]Yes
ME2 2	behave in accordance with rule 2 for scenario E2	MC10	M	8.10	[ ]Yes
ME2 3	behave in accordance with rule 3 for scenario E2	MC10	M	8.10	[ ]Yes
Comments:					

A.6.11 Message and APDU handling for scenario F1

Table A.13 - Message and APDU handling for scenario F1

Item	Question: Does the implementation...	Conditions for status	Status	Reference	Support
MF1 1	behave in accordance with rule 1 for scenario F1	MC11	M	8.11	[ ]Yes
MF1 2	behave in accordance with rule 2 for scenario F1	MC11	M	8.11	[ ]Yes
MF1 3	behave in accordance with rule 3 for scenario F1	MC11	M	8.11	[ ]Yes
Comments:					

A.6.12 Message and APDU handling for scenario F2

Table A.14 - Message and APDU handling for scenario F2

Item	Question: Does the implementation...	Conditions for status	Status	Reference	Support
MF2 1	behave in accordance with rule 1 for scenario F2	MC11	M	8.12	[ ]Yes
MF2 2	behave in accordance with rule 2 for scenario F2	MC11	M	8.12	[ ]Yes
MF2 3	behave in accordance with rule 3 for scenario F2	MC11	M	8.12	[ ]Yes
Comments:					

© ISO/IEC 2001 – All rights reserved

Copyright International Organization for Standardization
Provided by IHS under license with ISO
No reproduction or networking permitted without license from IHS
Not for Resale

A.6.13 Message and APDU handling for scenario G1

Table A.15 - Message and APDU handling for scenario G1

Item	Question: Does the implementation...	Conditions for status	Status	Reference	Support
MG1 1	behave in accordance with rule 1 for scenario G1	MC12	M	8.13	[ ]Yes
MG1 2	behave in accordance with rule 2 for scenario G1	MC12	M	8.13	[ ]Yes
MG1 3	behave in accordance with rule 3 for scenario G1	MC12	M	8.13	[ ]Yes
Comments:					

A.6.14 Message and APDU handling for scenario G2

Table A.16 - Message and APDU handling for scenario G2

Item	Question: Does the implementation...	Conditions for status	Status	Reference	Support
MG2 1	behave in accordance with rule 1 for scenario G2	MC12	M	8.14	[ ]Yes
MG2 2	behave in accordance with rule 2 for scenario G2	MC12	M	8.14	[ ]Yes
MG2 3	behave in accordance with rule 3 for scenario G2	MC12	M	8.14	[ ]Yes
Comments:					

© ISO/IEC 2001 – All rights reserved

Copyright International Organization for Standardization
Provided by IHS under license with ISO
No reproduction or networking permitted without license from IHS
Not for Resale

Annex B

(informative)

Example message sequence diagrams

This annex contains some examples of typical message sequences for some of the scenarios identified in this International Standard. Although the examples shown are typical, other valid message sequences are possible.

In the figures, the arrows indicate the direction of messages. For each message, only the message name and the contained APDU (if applicable) are shown. Other message contents are not shown, in particular for unsuccessful attempts at call diversion. The following abbreviations are used:

.inv invoke APDU

.res return result APDU

B.1 Scenario A1

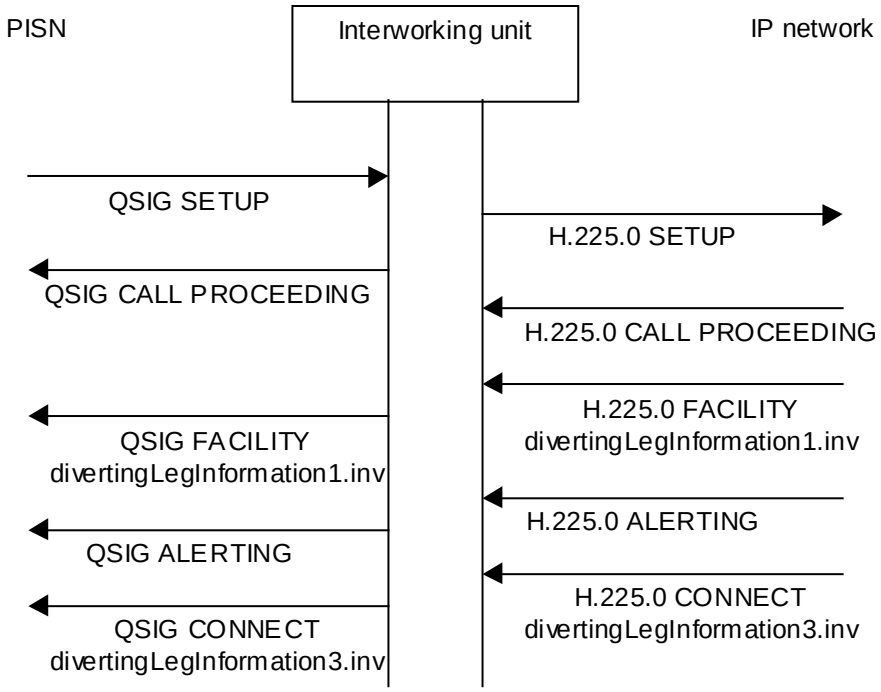

Figure B.1 – Example of scenario A1 (call forwarding unconditional or call forwarding busy)

© ISO/IEC 2001 – All rights reserved

Copyright International Organization for Standardization
Provided by IHS under license with ISO
No reproduction or networking permitted without license from IHS
Not for Resale

B.2 Scenario A2

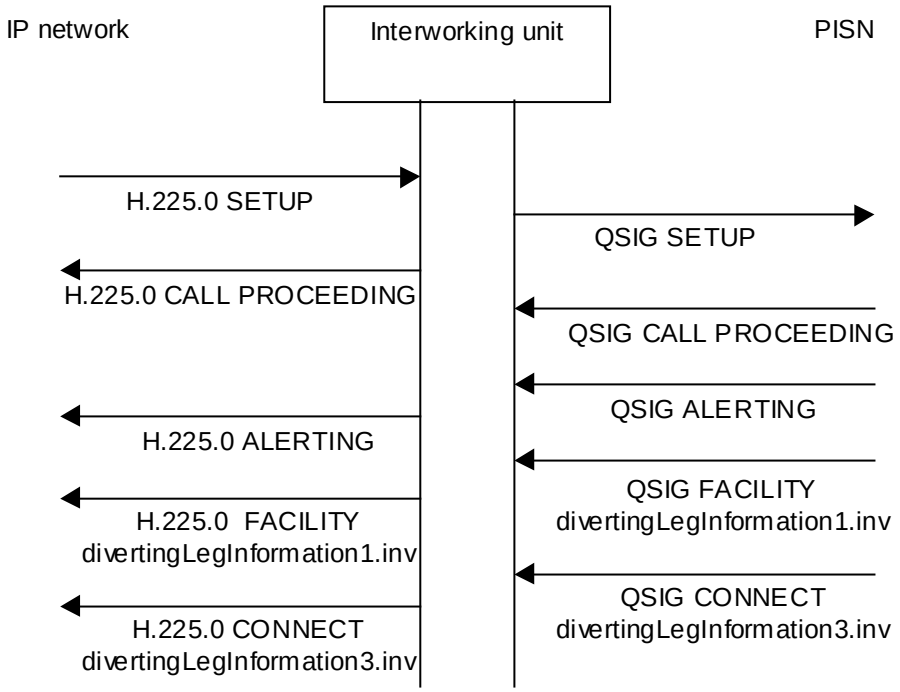

Figure B.2 – Example of scenario A2 (call forwarding no reply)

© ISO/IEC 2001 – All rights reserved

Copyright International Organization for Standardization
Provided by IHS under license with ISO
No reproduction or networking permitted without license from IHS
Not for Resale

B.3 Scenario B1

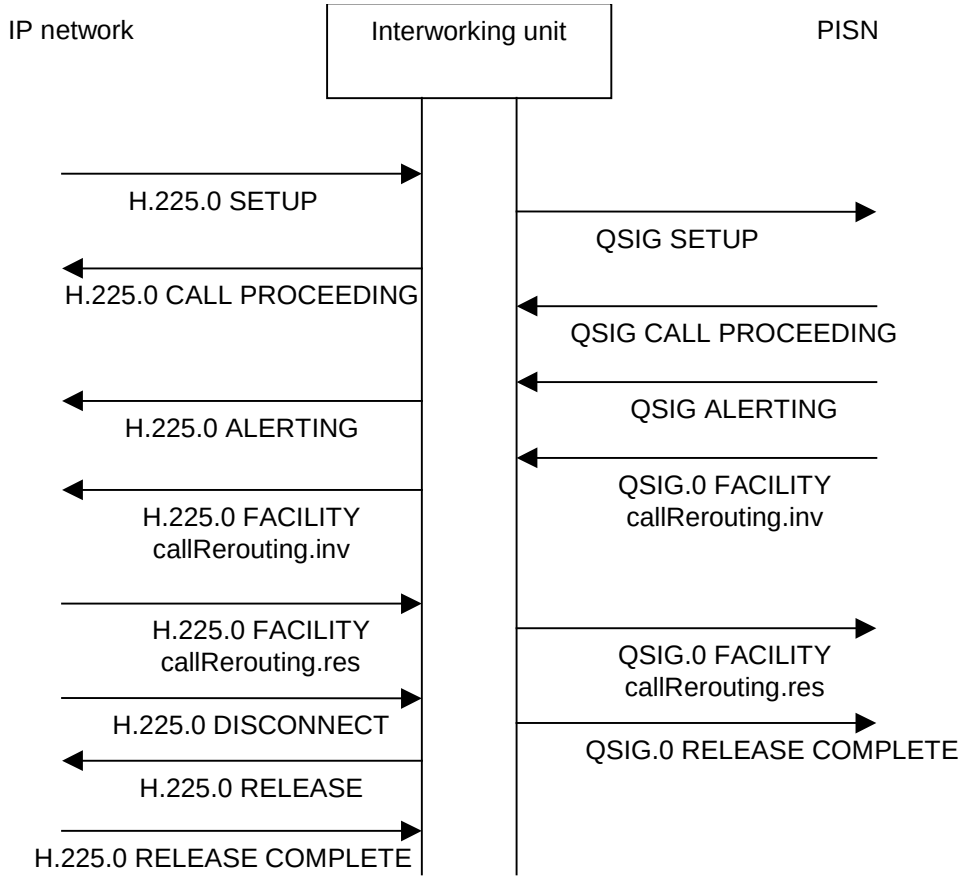

Figure B.3 – Example of scenario B1 (call forwarding no reply)

© ISO/IEC 2001 – All rights reserved

--`,,```,,,,````-`-`,,`,,`,`,,`---

Copyright International Organization for Standardization
Provided by IHS under license with ISO
No reproduction or networking permitted without license from IHS
Not for Resale

B.4 Scenario B2

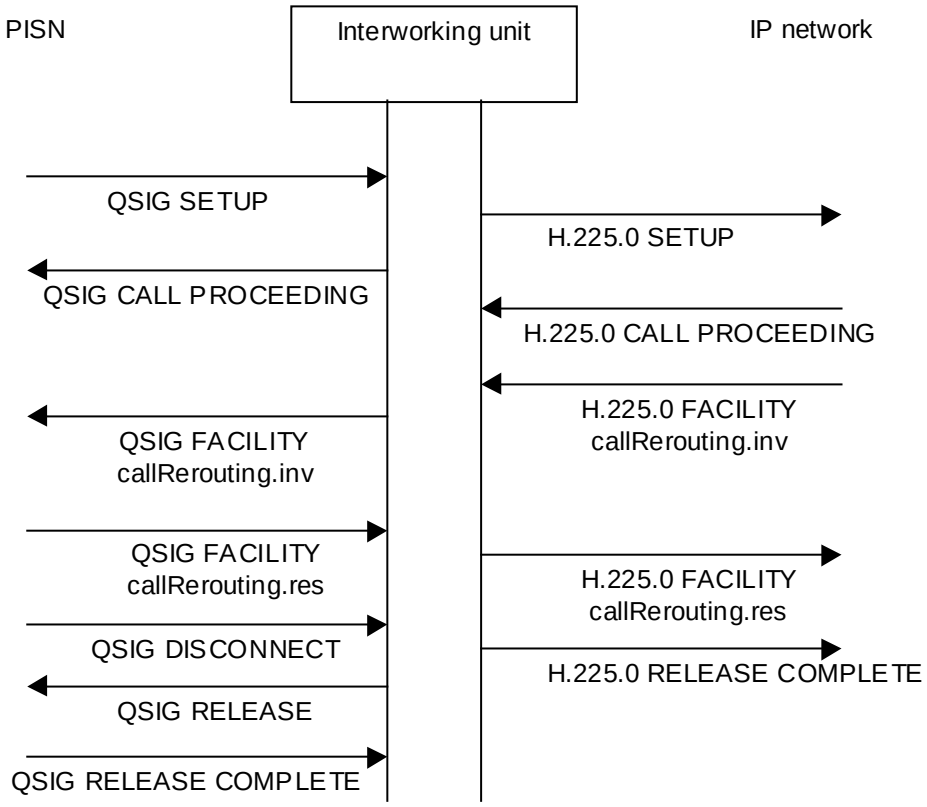

Figure B.4 – Example of scenario B2 (call forwarding unconditional or call forwarding busy)

B.5 Scenario C1

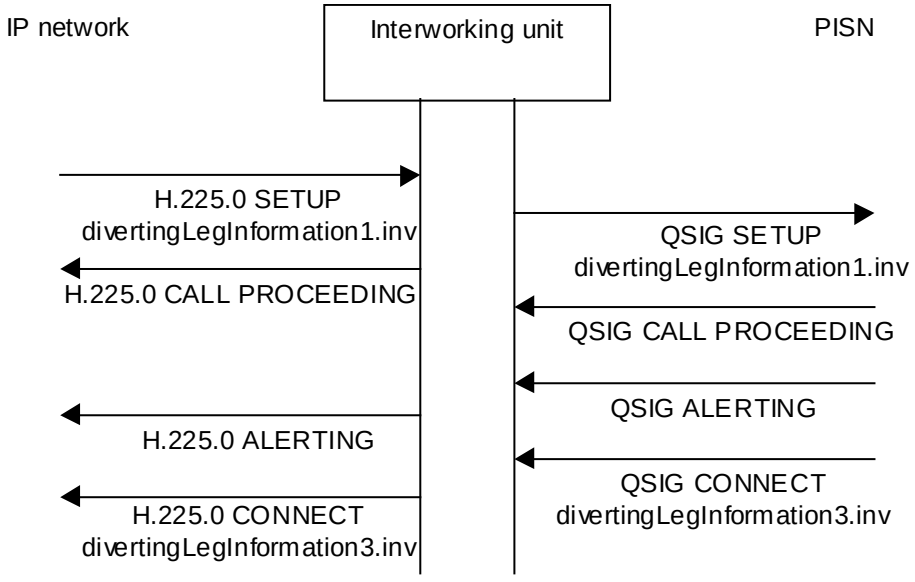

Figure B.5 – Example of scenario C1

© ISO/IEC 2001 – All rights reserved

Copyright International Organization for Standardization
Provided by IHS under license with ISO
No reproduction or networking permitted without license from IHS
Not for Resale

B.6 Scenario C2

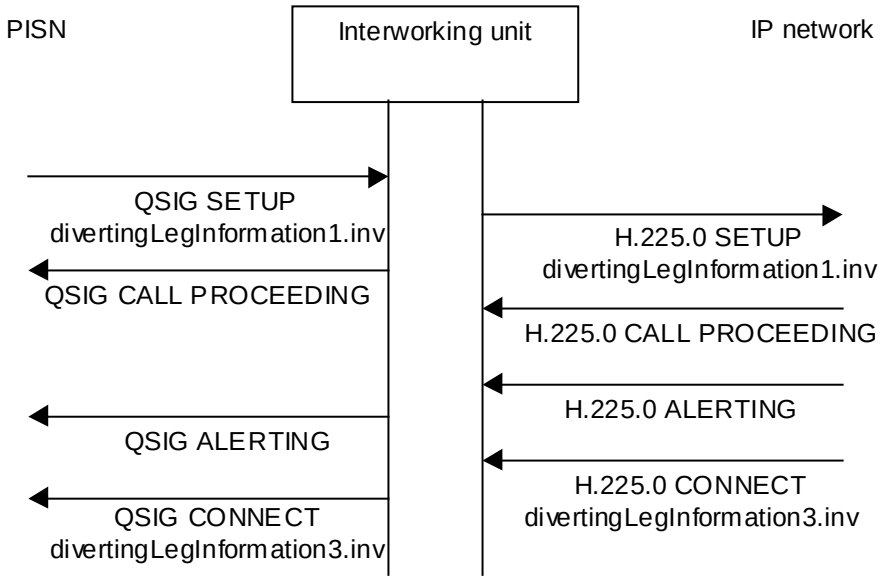

Figure B.6 – Example of scenario C2

© ISO/IEC 2001 – All rights reserved

Copyright International Organization for Standardization
Provided by IHS under license with ISO
No reproduction or networking permitted without license from IHS
Not for Resale

ICS 33.040.35

Price based on 32 pages

© ISO/IEC 2001 – All rights reserved

Copyright International Organization for Standardization
Provided by IHS under license with ISO
No reproduction or networking permitted without license from IHS

Not for Resale