INTERNATIONAL STANDARD

ISO/IEC 21410

First edition
2001-08-15

Information technology — Telecommunications and information exchange between systems — Corporate telecommunication networks — Signalling interworking between QSIG and H.323 — Call transfer supplementary services

Technologies de l'information — Télécommunications et échange d'information entre systèmes — Réseaux de télécommunications corporatifs — Signalisation de travail entre QSIG et H.323 — Services supplémentaires de transfert d'appel

Reference number
ISO/IEC 21410:2001(E)

© ISO/IEC 2001

Copyright International Organization for Standardization
Provided by IHS under license with ISO
No reproduction or networking permitted without license from IHS

Not for Resale

PDF disclaimer

This PDF file may contain embedded typefaces. In accordance with Adobe's licensing policy, this file may be printed or viewed but shall not be edited unless the typefaces which are embedded are licensed to and installed on the computer performing the editing. In downloading this file, parties accept therein the responsibility of not infringing Adobe's licensing policy. The ISO Central Secretariat accepts no liability in this area.

Adobe is a trademark of Adobe Systems Incorporated.

Details of the software products used to create this PDF file can be found in the General Info relative to the file; the PDF-creation parameters were optimized for printing. Every care has been taken to ensure that the file is suitable for use by ISO member bodies. In the unlikely event that a problem relating to it is found, please inform the Central Secretariat at the address given below.

© ISO/IEC 2001

All rights reserved. Unless otherwise specified, no part of this publication may be reproduced or utilized in any form or by any means, electronic or mechanical, including photocopying and microfilm, without permission in writing from either ISO at the address below or ISO's member body in the country of the requester.

ISO copyright office
Case postale 56 • CH-1211 Geneva 20
Tel. + 41 22 749 01 11
Fax + 41 22 749 09 47
E-mail copyright@iso.ch
Web www.iso.ch

Printed in Switzerland

© ISO/IEC 2001 – All rights reserved
Copyright International Organization for Standardization
Provided by IHS under license with ISO
No reproduction or networking permitted without license from IHS
Not for Resale

Contents

Foreword v

Introduction vi

1 Scope 1

2 Conformance 2

3 Normative references 2

4 Definitions 2

4.1 External definitions 2
4.2 Other definitions 3

4.2.1 Entity A 3
4.2.2 Entity A* 3
4.2.3 Entity B 3
4.2.4 Entity B* 3
4.2.5 Entity B’ 3
4.2.6 Entity C 3
4.2.7 Entity C* 3
4.2.8 Entity C’ 3
4.2.9 Gateway 3
4.2.10 Leg AB 3
4.2.11 Leg AB* 3
4.2.12 Leg AC 3
4.2.13 Leg BC 3
4.2.14 Leg BC* 3
4.2.15 Leg B 3
4.2.16 Leg B* 3
4.2.17 Leg C 3
4.2.18 Scenario AB1 3
4.2.19 Scenario AB*1 3
4.2.20 Scenario AB2 3
4.2.21 Scenario AB*2 3
4.2.22 Scenario AC1 3
4.2.23 Scenario AC2 3
4.2.24 Scenario BC1 3
4.2.25 Scenario BC*1 3
4.2.26 Scenario BC2 3
4.2.27 Scenario BC*2 3
4.2.28 Scenario B1 3
4.2.29 Scenario B*1 4
4.2.30 Scenario B2 4
4.2.31 Scenario B*2 4
4.2.32 Scenario C1 4
4.2.33 Scenario C2 4

5 Acronyms 4

6 Service architecture 4

6.1 Service architecture for invocation and operation 4

6.1.1 QSIG service architecture 4

© ISO/IEC 2001 – All rights reserved

Copyright International Organization for Standardization
Provided by IHS under license with ISO
No reproduction or networking permitted without license from IHS Not for Resale

6.1.2 H.450.2 service architecture **7**
6.1.3 Scenarios for interworking **10**
6.1.4 Determination of the location of entities when interworking **11**

6.2 Service architecture for activation, deactivation and interrogation **17**

6.2.1 QSIG service architecture **17**
6.2.2 H.450.2 service architecture **17**
6.2.3 Scenarios for interworking **17**

7 Protocol interworking – General requirements **17**

8 Protocol interworking – Messages and APDUs **17**

8.1 Scenario AB1 **17**
8.2 Scenario AB2 **18**
8.3 Scenario AC1 **18**
8.4 Scenario AC2 **19**
8.5 Scenario BC1 **20**
8.6 Scenario BC2 **21**
8.7 Scenario B1 **22**
8.8 Scenario B2 **23**
8.9 Scenario C1 **24**
8.10 Scenario C2 **25**
8.11 Scenario AB*1 **25**
8.12 Scenario AB*2 **26**
8.13 Scenario BC*1 **27**
8.14 Scenario BC*2 **28**
8.15 Scenario B*1 **29**
8.16 Scenario B*2 **30**

9 Protocol interworking – Content of APDUs **30**

9.1 APDU content mapping from QSIG to H.323 **30**

9.1.1 QSIG ssctInitiate invoke APDU mapping to H.323 callTransferInitiate invoke APDU **30**
9.1.2 QSIG ssctSetup invoke APDU mapping to H.323 callTransferSetup invoke APDU **31**

9.2 APDU content mapping from H.323 to QSIG **31**

9.2.1 H.323 callTransferInitiate invoke APDU mapping to QSIG ssctInitiate invoke APDU **31**
9.2.2 H.323 callTransferSetup invoke APDU mapping to QSIG ssctSetup invoke APDU **31**

Annexes

A - Implementation Conformance Statement (ICS) proforma **32**

B - Example message sequence diagrams **46**

© ISO/IEC 2001 – All rights reserved

Copyright International Organization for Standardization
Provided by IHS under license with ISO
No reproduction or networking permitted without license from IHS
Not for Resale

Foreword

ISO (the International Organization for Standardization) and IEC (the International Electrotechnical Commission) form the specialized system for worldwide standardization. National bodies that are members of ISO or IEC participate in the development of International Standards through technical committees established by the respective organization to deal with particular fields of technical activity. ISO and IEC technical committees collaborate in fields of mutual interest. Other international organizations, governmental and non-governmental, in liaison with ISO and IEC, also take part in the work.

International Standards are drafted in accordance with the rules given in the ISO/IEC Directives, Part 3.

In the field of information technology, ISO and IEC have established a joint technical committee, ISO/IEC JTC 1. Draft International Standards adopted by the joint technical committee are circulated to national bodies for voting. Publication as an International Standard requires approval by at least 75 % of the national bodies casting a vote.

Attention is drawn to the possibility that some of the elements of this International Standard may be the subject of patent rights. ISO and IEC shall not be held responsible for identifying any or all such patent rights.

International Standard ISO/IEC 21410 was prepared by ECMA (as ECMA-308) and was adopted, under a special “fast-track procedure”, by Joint Technical Committee ISO/IEC JTC 1, *Information technology*, in parallel with its approval by national bodies of ISO and IEC.

Annex A forms a normative part of this International Standard. Annex B is for information only.

© ISO/IEC 2001 – All rights reserved

Copyright International Organization for Standardization
Provided by IHS under license with ISO
No reproduction or networking permitted without license from IHS
Not for Resale

Introduction

This International Standard is one of a series of Standards defining the interworking of services and signalling protocols deployed in Corporate telecommunication Networks (CNs). The series uses telecommunication concepts as developed by ITU-T and conforms to the framework of International Standards on Open Systems Interconnection as defined by ISO/IEC.

This International Standard defines the signalling protocol interworking for call transfer supplementary services between a Private Integrated Services Network (PISN) and a packet-based private telecommunications network based on the Internet Protocol (IP). It is further assumed that the protocol for the PISN part is that defined for the Q reference point (QSIG) and that the protocols for the IP-based network are based on ITU-T Recommendation H.323.

This International Standard is based upon the practical experience of ECMA member companies and the results of their active and continuous participation in the work of ISO/IEC JTC 1, ITU-T, ETSI and other international and national standardization bodies. It represents a pragmatic and widely based consensus.

© ISO/IEC 2001 – All rights reserved

Copyright International Organization for Standardization
Provided by IHS under license with ISO
No reproduction or networking permitted without license from IHS
Not for Resale

Information technology - Telecommunications and information exchange between systems - Corporate telecommunication networks - Signalling interworking between QSIG and H.323 - Call transfer supplementary services

1 Scope

This International Standard specifies signalling interworking between “QSIG” and “H.323” in support of the call transfer supplementary services within a Corporate telecommunication Network (CN).

“QSIG” is a signalling protocol that operates at the Q reference point between Private Integrated Services eXchanges (PINX) within a Private Integrated Services Network (PISN). The Q reference point is defined in ISO/IEC 11579-1. A PISN provides circuit-switched basic services and supplementary services to its users. QSIG is specified in other Standards, in particular ISO/IEC 11572 (call control in support of basic services), ISO/IEC 11582 (generic functional protocol for the support of supplementary services) and a number of standards specifying individual supplementary services. ISO/IEC 13869 specifies the QSIG protocol in support of call transfer by consultation and ISO/IEC 19460 specifies the QSIG protocol in support of single step call transfer.

“H.323” is a set of signalling protocols for the support of voice or multimedia communication within a packet network, in particular a packet network that uses the Internet Protocol (IP) as its network layer protocol (IP network). H.323 signalling protocols operate between endpoints in an IP network, either indirectly via one or more gatekeepers, or directly. An endpoint can be a terminal or a gateway to another network. H.323 is an “umbrella” recommendation referring to various ITU-T recommendations, in particular Recommendations H.225.0 and H.245 (basic communication capabilities) and Recommendation H.450.1 (generic functional protocol for the support of supplementary services). Recommendation H.450.2 specifies the H.323 protocol in support of call transfer.

NOTE - H.450.2 applies only to the 1998 version of H.323 (also known as H.323 version 2) and to later versions.

Call transfer by consultation, as supported by ISO/IEC 13869, is a supplementary service that enables a user (user A) to transform two of that user's calls (at least one of which must be answered) into a new call between the two other users in the two calls (users B and C).

Single step call transfer, as supported by ISO/IEC 19460, is a supplementary service that enables a user (user A) to transform an existing call between user A and user B into a new call between user B and user C without user A needing to establish a call with user C prior to transfer.

Call transfer, as supported by H.450.2, is a supplementary service that enables the served user (user A) to transform an existing call with a second user (user B) into a new call between user B and a third user (user C) selected by user A. User A may or may not have a call established with user C prior to call transfer. If a call is already established between user A and user C, this is known as transfer by consultation and is equivalent to call transfer as supported by ISO/IEC 13869. If a call is not already established between user A and user C, this is known as single step call transfer and is equivalent to call transfer as supported by ISO/IEC 19460.

Interworking between QSIG and H.323 permits a call originating at a user of a PISN to terminate at a user of an IP network, or a call originating at a user of an IP network to terminate at a user of a PISN. This International Standard provides the following additional capabilities:

- a PISN user with two calls established, at least one of which being to or from a user in an IP network, to be able to transform those two calls into a new call between the other two users involved;
- a PISN user with a call established to or from a user in an IP network to be able to transform that call into a new call between the IP network user and a third user selected by the PISN user, that third user being either in the IP network or in the PISN;
- a PISN user with a call established to a second PISN user to be able to transfer that call into a new call between the second user and a third user selected by the first user, that third user being in an IP network;
- an IP network user with two calls established, at least one of which being to or from a user in a PISN, to be able to transform those two calls into a new call between the other two users involved;
- an IP network user with a call established to or from a user in a PISN to be able to transform that call into a new call between the PISN user and a third user selected by the IP network user, that third user being either in the IP network or in the PISN; and

© ISO/IEC 2001 – All rights reserved

Copyright International Organization for Standardization
Provided by IHS under license with ISO
No reproduction or networking permitted without license from IHS Not for Resale

- an IP network user with a call established to a second user in the IP network to be able to transfer that call into a new call between the second user and a third user selected by the first user, that third user being in a PISN.

This International Standard is applicable to any interworking unit that can act as a gateway between a PISN employing QSIG and an IP network employing H.323.

2 Conformance

In order to conform to this International Standard, a gateway shall satisfy the requirements identified in the Implementation Conformance Statement (ICS) proforma in annex A.

3 Normative references

The following normative documents contain provisions which, through reference in this text, constitute provisions of this International Standard. For dated references, subsequent amendments to, or revisions of, any of these publications do not apply. However, parties to agreements based on this International Standard are encouraged to investigate the possibility of applying the most recent editions of the normative documents indicated below. For undated references, the latest edition of the normative document referred to applies. Members of ISO and IEC maintain registers of currently valid International Standards.

ISO/IEC 11572:2000, *Information technology - Telecommunications and information exchange between systems - Private Integrated Services Network - Circuit mode bearer services - Inter-exchange signalling procedures and protocol*

ISO/IEC 11579-1:1994, *Information technology - Telecommunications and information exchange between systems - Private integrated services network - Part 1: Reference configuration for PISN Exchanges (PINX)*

ISO/IEC 11582:1995, *Information technology - Telecommunications and information exchange between systems - Private Integrated Services Network - Generic functional protocol for the support of supplementary services - Inter-exchange signalling procedures and protocol*

ISO/IEC 13869:1995, *Information technology - Telecommunications and information exchange between systems - Private Integrated Services Network - Inter-exchange signalling protocol - Call transfer supplementary service*

ISO/IEC 19460:2001, *Information technology - Telecommunications and information exchange between systems - Private Integrated Services Network - Inter-exchange signalling protocol - Single Step Call Transfer Supplementary Service*

ISO/IEC 21409:2001, *Information technology - Telecommunications and information exchange between systems - Corporate telecommunication networks - Signalling interworking between QSIG and H.323 - Generic functional protocol for the support of supplementary services*

ITU-T Rec. H.225.0:1998 (or later edition), *Call signalling protocols and media stream packetization for packet-based multimedia communication systems*

ITU-T Rec. H.245:1998 (or later edition), *Control protocol for multimedia communication*

ITU-T Rec. H.323:1998 (or later edition), *Packet-based multimedia communications systems*

ITU-T Rec. H.450.1:1998, *Generic functional protocol for the support of supplementary services in H.323*

ITU-T Rec. H.450.2:1998, *Call transfer supplementary service for H.323*

4 Definitions

For the purposes of this International Standard, the following definitions apply.

4.1 External definitions

This International Standard uses the following terms defined in other documents:

- Call (ISO/IEC 21409)
- Corporate telecommunication Network (CN) (ISO/IEC 21409)
- Endpoint (ITU-T Rec. H.323)
- IP network (ISO/IEC 21409)
- Gatekeeper (ITU-T Rec. H.323)
- Private Integrated Services Network (PISN) (ISO/IEC 21409)

© ISO/IEC 2001 – All rights reserved

Copyright International Organization for Standardization
Provided by IHS under license with ISO
No reproduction or networking permitted without license from IHS
Not for Resale

– Private Integrated services Network eXchange (PINX) (ISO/IEC 11579-1)

Additionally the definitions in ISO/IEC 13869, ISO/IEC 19460 and ITU-T Recommendation H.450.2 apply as appropriate.

4.2 Other definitions

4.2.1 Entity A : In call transfer by consultation, the signalling entity at the PINX or H.323 endpoint serving the transferring user (user A).

4.2.2 Entity A* : In single step call transfer, the signalling entity at the PINX or H.323 endpoint serving the transferring user (user A).

4.2.3 Entity B : In call transfer by consultation, the signalling entity in the PISN or IP network associated with the call between the transferring user (user A) and the transferred user (user B).

4.2.4 Entity B* : In single step call transfer, the signalling entity in the PISN or IP network associated with the call between the transferring user (user A) and the transferred user (user B).

4.2.5 Entity B' : Signalling entity at the PINX or the H.323 endpoint serving the transferred user (user B).

4.2.6 Entity C : In call transfer by consultation, the signalling entity in the PISN or IP network associated with the call between the transferring user (user A) and the transferred-to-user (user C).

4.2.7 Entity C* : In single step call transfer, the signalling entity in the PISN or IP network associated with the call between the transferred user (user B) and the transferred-to-user (user C).

4.2.8 Entity C' : Signalling entity at the PINX or H.323 endpoint serving the transferred-to-user (user C).

4.2.9 Gateway : A gateway as defined in H.323 specifically for the purpose of interworking with a network employing QSIG.

4.2.10 Leg AB : In call transfer by consultation, the call segment that lies between entity A and entity B.

4.2.11 Leg AB* : In single step call transfer, the call segment that lies between entity A* and entity B*.

4.2.12 Leg AC : In call transfer by consultation, the call segment that lies between entity A and entity C.

4.2.13 Leg BC : In call transfer by consultation, the call segment that lies between entity B and entity C.

4.2.14 Leg BC* : In single step call transfer, the call segment that lies between entity B* and entity C*.

4.2.15 Leg B : In call transfer by consultation, the call segment that lies between the entity B and entity B'.

4.2.16 Leg B* : In single step call transfer, the call segment that lies between entity B* and entity B'.

4.2.17 Leg C : In call transfer by consultation, the call segment that lies between entity C and entity C'.

4.2.18 Scenario AB1 : Interworking arrangement in which entity A (PINX A) is in the PISN and entity B is in the IP network.

4.2.19 Scenario AB*1 : Interworking arrangement in which entity A* (PINX A) is in the PISN and entity B* is in the IP network.

4.2.20 Scenario AB2 : Interworking arrangement in which entity A (endpoint A) is in the IP network and entity B is in the PISN.

4.2.21 Scenario AB*2 : Interworking arrangement in which entity A* (endpoint A) is in the IP network and entity B* is in the PISN.

4.2.22 Scenario AC1 : Interworking arrangement in which entity A (PINX A) is in the PISN and entity C is in the IP network.

4.2.23 Scenario AC2 : Interworking arrangement in which entity A (endpoint A) is in the IP network and entity C is in the PISN.

4.2.24 Scenario BC1 : Interworking arrangement in which entity B (PINX B) is in the PISN and entity C is in the IP network.

4.2.25 Scenario BC*1 : Interworking arrangement in which entity B* (PINX B) is in the PISN and entity C* is in the IP network.

4.2.26 Scenario BC2 : Interworking arrangement in which entity B is in the IP network and entity C is in the PISN.

4.2.27 Scenario BC*2 : Interworking arrangement in which entity B* is in the IP network and entity C* is in the PISN.

4.2.28 Scenario B1 : Interworking arrangement in which entity B (PINX B) is in the PISN and entity B' is in the IP network.

© ISO/IEC 2001 – All rights reserved

Copyright International Organization for Standardization
Provided by IHS under license with ISO
No reproduction or networking permitted without license from IHS Not for Resale

4.2.29 Scenario B*1 : Interworking arrangement in which entity B* (PINX B) is in the PISN and entity B' is in the IP network.

4.2.30 Scenario B2 : Interworking arrangement in which entity B (diverting endpoint or its gatekeeper) is in the IP network and entity B' is in the PISN.

4.2.31 Scenario B*2 : Interworking arrangement in which entity B* (diverting endpoint or its gatekeeper) is in the IP network and entity B' is in the PISN.

4.2.32 Scenario C1 : Interworking arrangement in which entity C (PINX C) is in the PISN and entity C' is in the IP network.

4.2.33 Scenario C2 : Interworking arrangement in which entity C (endpoint C) is in the IP network and entity C' is in the PISN.

5 Acronyms

APDU	Application Protocol Data Unit
CN	Corporate telecommunication Network
ICS	Implementation Conformance Statement
IP	Internet Protocol
PINX	Private Integrated services Network eXchange
PISN	Private Integrated Services Network
SS-CT	Supplementary Service Call Transfer
SS-SSCT	Supplementary Service Single Step Call Transfer

6 Service architecture

6.1 Service architecture for invocation and operation

6.1.1 QSIG service architecture

QSIG supports two different call transfer services:

- transfer by consultation (ISO/IEC 13869); and
- single step call transfer (ISO/IEC 19460).

6.1.1.1 ISO/IEC 13869 service architecture - transfer by consultation

ISO/IEC 13869 supports a call transfer service that starts from a situation where user A has two calls (typically one of which is on hold). Transfer from this situation can be performed in two ways: by join (at the PINX serving user A) or by rerouteing.

A single model can be derived to accommodate both scenarios. The model involves five signalling entities as follows:

- entity A – acts on behalf of user A and co-ordinates the transfer;
- entity B – initiates the re-routed connection from the first transferred user (user B) to the other transferred user (user C);
- entity B' – acts on behalf of user B;
- entity C – terminates the re-routed connection from user B to user C and completes the join; and
- entity C' – acts on behalf of user C.

--`,,```,,,,````-`-`,,`,,`,`,,`---

© ISO/IEC 2001 – All rights reserved

Copyright International Organization for Standardization
Provided by IHS under license with ISO
No reproduction or networking permitted without license from IHS

Not for Resale

This can be represented diagrammatically as shown in figure 1.

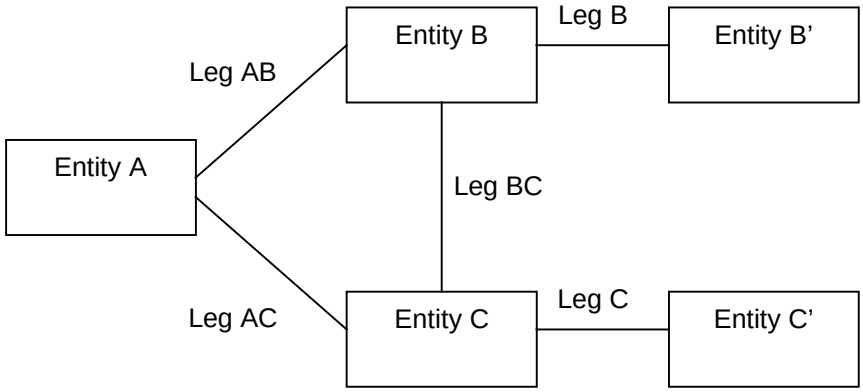

Figure 1 – Generalised call transfer model for QSIG transfer by consultation

From this it can be seen that there are five segments or "legs" to the call:

- leg AB between entity A and entity B;
- leg AC between entity A and entity C;
- leg BC between entity B and entity C;
- leg B between entity B and entity B'; and
- leg C between entity C and entity C'.

The protocol defined in ISO/IEC 13869 supports each of these five legs.

For both transfer by join and transfer by rerouteing, entities A, B' and C' are located at the PINX serving user A, user B and user C respectively.

For call transfer by join, entities B and C are collocated with entity A in the PINX serving user A. This means that legs AB, AC and BC are all internal to that PINX, and therefore the QSIG protocols for these legs do not apply. Only the QSIG protocols for legs B and C apply. This is shown in figure 2.

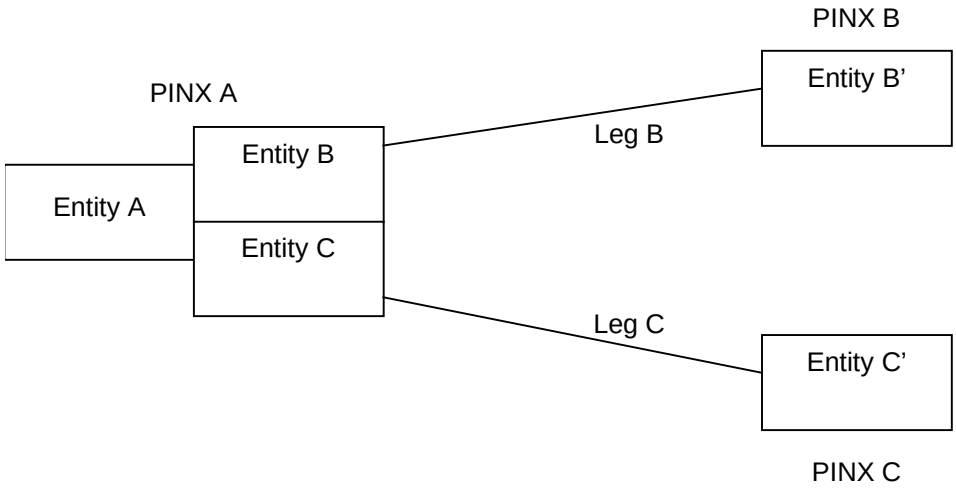

Figure 2 – Call transfer by join model for QSIG

For call transfer by rerouteing, entity B is collocated with entity B' in the PINX serving user B, and entity C is collocated with entity C' in the PINX serving user C. This means that legs B and C are internal to the respective PINXs, and therefore the QSIG protocols for these legs do not apply. Only the QSIG protocols for legs AB, AC and BC apply. This is shown in figure 3.

© ISO/IEC 2001 – All rights reserved

Copyright International Organization for Standardization
Provided by IHS under license with ISO
No reproduction or networking permitted without license from IHS
Not for Resale

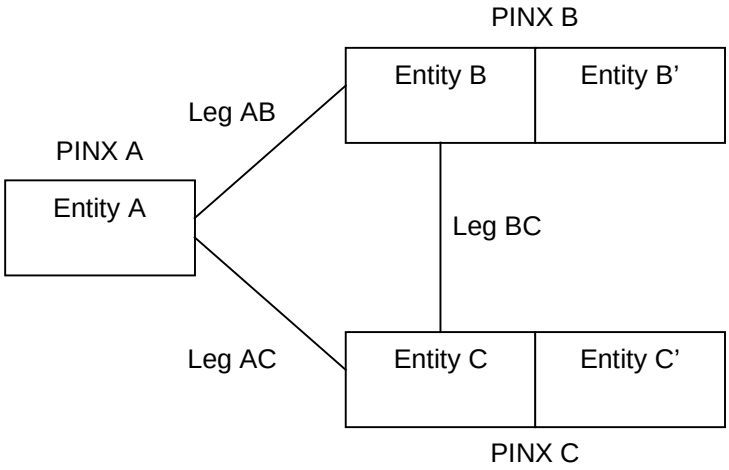

Figure 3 – Call transfer by rerouteing model for QSIG

In both cases (transfer by join and transfer by re-routeing), where a user is in another network, the role of entity A, entity B' or entity C' is performed by the other network, the gateway PINX or the two in combination. However, from the QSIG point of view the role is performed by the gateway PINX.

6.1.1.2 ISO/IEC 19460 service architecture – single step call transfer

ISO/IEC 19460 supports a call transfer service that starts from a situation where user A has an active call with user B and the call is to be transferred to user C in the case where A does not already have a call to user C.

If user A does not provide sufficient information to enable a call to be established to user C, user B may provide additional information to identify user C and enable the call to be established.

The generalised model for Single Step call Transfer is as shown in figure 4.

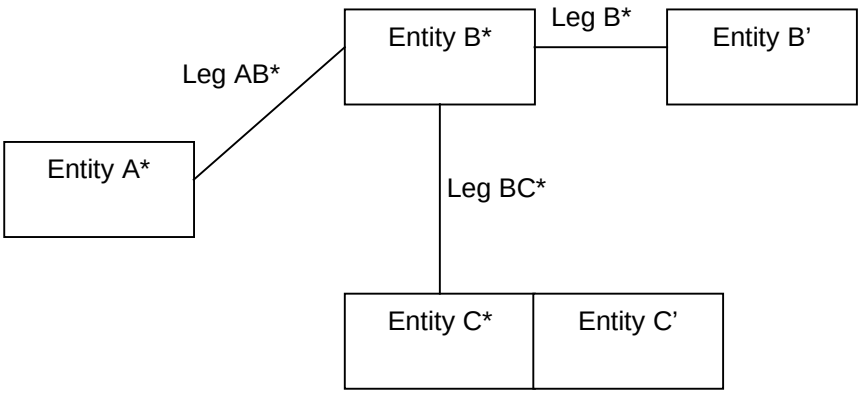

Figure 4 – Generalised model for QSIG Single Step Call Transfer

Compared with the general model for transfer by consultation, the following differences exist:

- entity A* replaces entity A (although it has some common functionality);
- entity B* replaces entity B (although it has some common functionality);
- entity C* replaces entity C;
- leg AB* replaces leg AB (but differs only slightly);
- leg BC* replaces leg BC (but differs only slightly);
- leg B* replaces Leg B (but differs only slightly); and
- leg AC does not exist.

© ISO/IEC 2001 – All rights reserved

Copyright International Organization for Standardization
Provided by IHS under license with ISO
No reproduction or networking permitted without license from IHS
Not for Resale

Entities A*, B' and C' are located at the PINX serving user A, user B and user C respectively.

Entity B* may be located at any PINX between entity A* and Entity B'.

Entity C* is always collocated with entity C' in the PINX serving user C. This means that the leg between entity C* and entity C' is internal to the PINX, and therefore the QSIG protocol for this leg does not apply. Only the protocols defined in ISO/IEC 19460 for legs AB*, BC* and B* apply.

Where a user is in another network, the role of entity A*, entity B' or the combined entities C*/C' is performed by the other network, the gateway PINX or the two in combination. However, from the QSIG point of view the role is performed by the gateway PINX.

6.1.2 H.450.2 service architecture

H.450.2 supports two different call transfer services:

- transfer by consultation (similar to the service supported by ISO/IEC 13869); and
- single step call transfer (similar to the service supported by ISO/IEC 19460).

6.1.2.1 Transfer by consultation

The model shown in figure 1 for QSIG call transfer by consultation applies also to H.450.2. Various scenarios arise, depending on gatekeeper involvement. A gatekeeper can act on behalf of user B and/or a gatekeeper can act on behalf of user C.

If no gatekeepers are involved in the call transfer service, entity A is located at user A's endpoint, entities B and B' are located at user B's endpoint, and entities C and C' are located at user C's endpoint. Legs AB, AC and BC are supported by H.450.2 signalling. This is shown in figure 5.

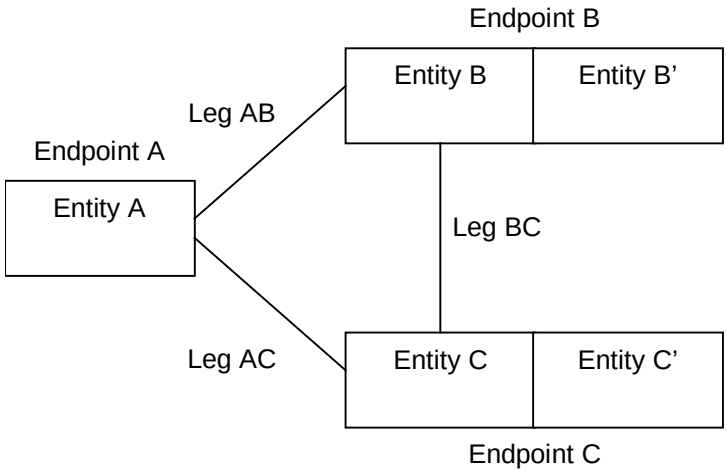

Figure 5 – H.450.2 call transfer by consultation model – no gatekeepers involved

If a gatekeeper is involved in call transfer on behalf of user B and another gatekeeper is involved on behalf of user C, entities B and C are located in the respective gatekeepers and legs AB, AC, CB, B and C are all supported by H.450.2 signalling. This is shown in figure 6.

© ISO/IEC 2001 – All rights reserved

Copyright International Organization for Standardization
Provided by IHS under license with ISO
No reproduction or networking permitted without license from IHS
Not for Resale

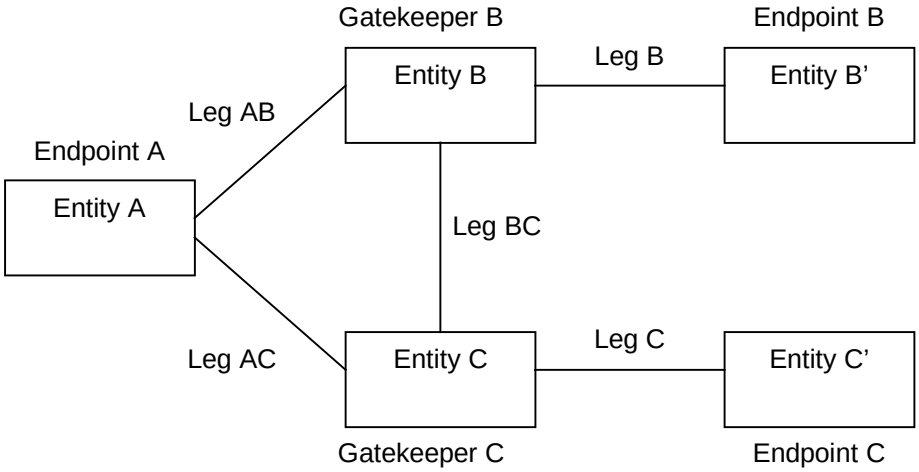

Figure 6 – H.450.2 call transfer by consultation model – gatekeepers involved on behalf of endpoint B and endpoint C

Models for the cases where only entity B or only entity C is located at a gatekeeper can easily be derived.

If the same gatekeeper acts on behalf of user B and user C, the model in figure 7 applies. In this case leg BC is internal to the gatekeeper and H.450.2 signalling does not apply.

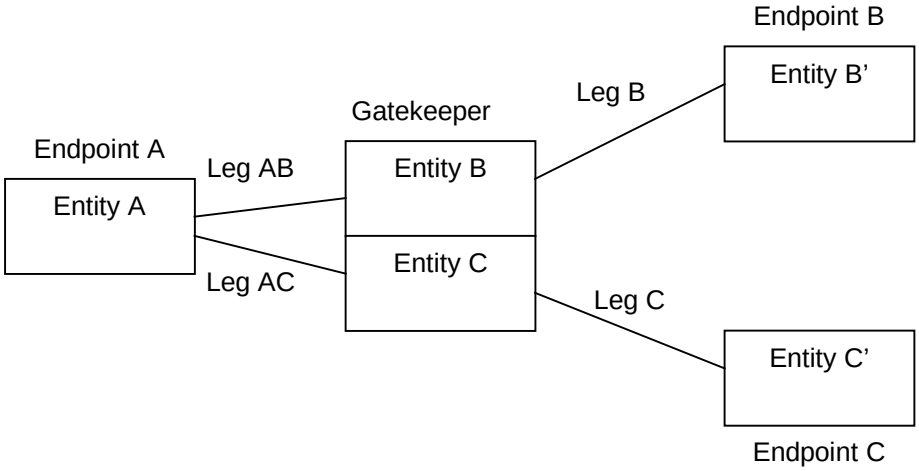

Figure 7 – H.450.2 call transfer by consultation model – single gatekeeper involved on behalf of endpoint B and endpoint C

Where a user is in another network, the role of entity A, entities B and B' or entities C and C' is performed by the other network, the gateway, or the two in combination. However, from the H.450.2 point of view the role is performed by the gateway.

NOTE - The equivalent of QSIG transfer by join does not exist with H.450.2. Legs AB and AC exist in all scenarios (although leg BC can be hidden inside a gatekeeper).

6.1.2.2 Single step call transfer

For single step call transfer, the general model is as shown in figure 4.

Unlike the QSIG single step call transfer supplementary service (see 6.1.1.2), the H.450.2 single step call transfer supplementary service does not enable user B to provide additional information to identify user C if user A did not provide sufficient information to enable a call to be established to user C.

Various scenarios arise, depending on gatekeeper involvement. A gatekeeper can act on behalf of user B and/or a gatekeeper can act on behalf of user C. This has impact on the exposure of legs B* and C*, as for transfer by consultation.

© ISO/IEC 2001 – All rights reserved

Copyright International Organization for Standardization
Provided by IHS under license with ISO
No reproduction or networking permitted without license from IHS
Not for Resale

If no gatekeepers are involved in single step call transfer, entity A* is located at user A's endpoint, entities B* and B' are located at user B's endpoint, and entities C* and C' are located at user C's endpoint. Legs AB*, and BC* are supported by H.450.2 signalling. This is shown in figure 8.

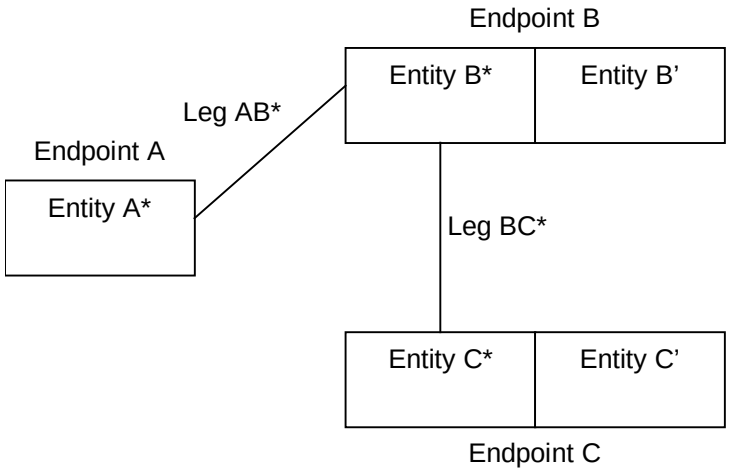

Figure 8 – H.450.2 single step call transfer model– no gatekeepers involved

If a gatekeeper is involved in single step call transfer on behalf of user B and another gatekeeper is involved on behalf of user C, entities B* and C*/C' are located in the respective gatekeepers and legs AB*, BC*, and B* are all supported by H.450.2 signalling. This is shown in figure 9.

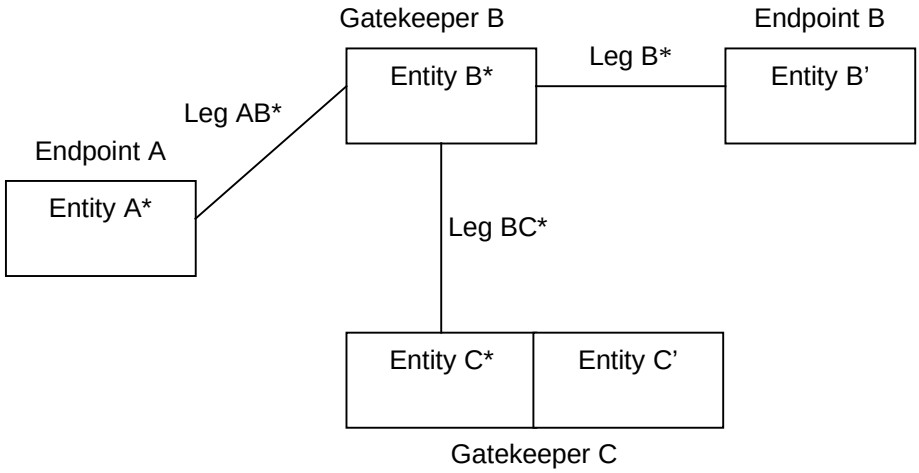

Figure 9 – H.450.2 single step call transfer model – gatekeepers involved on behalf of endpoint B and endpoint C

Models for the cases where only entity B or only entity C is located at a gatekeeper can easily be derived.

If the same gatekeeper acts on behalf of user B and user C, the model in figure 10 applies. In this case leg BC* is internal to the gatekeeper and H.450.2 signalling does not apply.

© ISO/IEC 2001 – All rights reserved
--`,,```,,,,````-`-`,,`,,`,`,,`---

Copyright International Organization for Standardization
Provided by IHS under license with ISO
No reproduction or networking permitted without license from IHS
Not for Resale

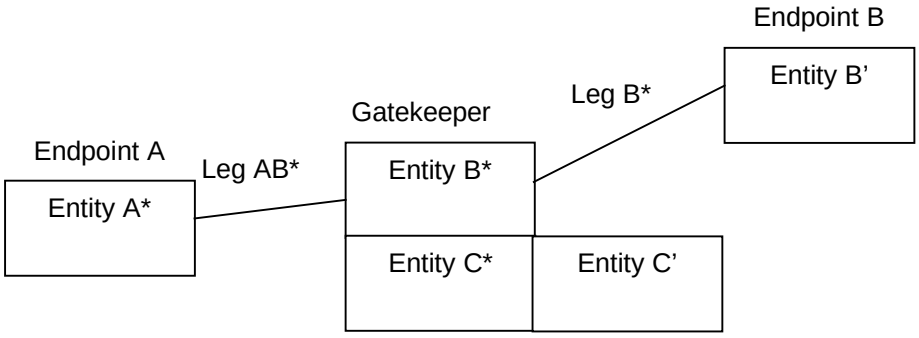

Figure 10 – H.450.2 single step call transfer model – single gatekeeper involved on behalf of endpoint B and endpoint C

In all of these cases of single step call transfer, where a user is in another network, the role of entity A*, entities B* and B' or entities C* and C' is performed by the other network, the gateway, or the two in combination. However, from the H.450.2 point of view the role is performed by the gateway.

6.1.3 Scenarios for interworking

6.1.3.1 Transfer by consultation

The models for QSIG and H.450.2 are very similar. This means that the same model is applicable to the inter-networking situation between an IP network and a PISN, where one or more of the users involved are served by the IP network and the others are served by the PISN.

Entities A, B' and C' are always located in the network of the user concerned, but there is some flexibility in the location of entities B and C. Interworking between H.450.2 and QSIG can occur on any of the five legs. For each of the five possible points of interworking, two scenarios arise, depending on which side of the interworking point the PISN lies. This gives 10 scenarios in total that need to be considered:

- Scenario AB1: Entity A (PINX A) in PISN, entity B (gatekeeper B or endpoint B) in IP network;
- Scenario AB2: Entity A (endpoint A) in IP network, entity B (PINX B) in PISN;
- Scenario AC1: Entity A (PINX A) in PISN, entity C (gatekeeper C or endpoint C) in IP network;
- Scenario AC2: Entity A (endpoint A) in IP network, entity C (PINX C) in PISN;
- Scenario BC1: Entity B (PINX B) in PISN, entity C (gatekeeper C or endpoint C) in IP network;
- Scenario BC2: Entity B (gatekeeper B or endpoint B) in IP network, entity C (PINX C) in PISN;
- Scenario B1: Entity B (PINX B) in PISN, entity B' (endpoint B) in IP network;
- Scenario B2: Entity B (gatekeeper B or endpoint B) in IP network, entity B' (PINX B) in PISN;
- Scenario C1: Entity C (PINX C) in PISN, entity C' (endpoint C) in IP network; and
- Scenario C2: Entity C (gatekeeper C or endpoint C) in IP network, entity C' (PINX C) in PISN.

With scenarios AB1, AB2, AC1, AC2, BC1 and BC2, the PISN is involved in transfer by rerouteing. Since this is only an optional part of ISO/IEC 13869, these scenarios will not always be available.

It is possible for more than one scenario to apply to the same call. In particular, because of the triangular situation, scenarios AB1, AB2, AC1, AC2, BC1 and BC2 will always occur in pairs, e.g., scenarios AB1 and AC1 if entity A is in the PISN and entities B and C are in the IP network.

A point of interworking will be implemented in a gateway, which acts as both an H.323 endpoint from the point of view of the IP network and an end PINX from the point of view of the PISN. Call transfer entities can be located in the gateway but are logically separate from the point of interworking. For example, if user B is in the PISN and users A and C are in the IP network, entity B could be located in the gateway on the IP network side of the interworking point, with entity B' in the PISN (PINX B). Logically interworking would still be taking place on leg B.

© ISO/IEC 2001 – All rights reserved

Copyright International Organization for Standardization
Provided by IHS under license with ISO
No reproduction or networking permitted without license from IHS
Not for Resale

6.1.3.2 Single step call transfer

The models for QSIG and H.450.2 are very similar. This means that the same model is applicable to the inter-networking situation between an IP network and a PISN, where one or more of the users involved are served by the IP network and the others are served by the PISN.

Entities A*, B' C* and C' are always located in the network of the user concerned, but there is some flexibility in the location of entity B*. Interworking between H.450.2 and QSIG can occur on any of legs AB*, BC* and B*. For each of the three points of interworking, two scenarios arise, depending on which side of the interworking point the PISN lies. This gives six scenarios in total that need to be considered:

- Scenario AB*1: Entity A* (PINX A) in PISN, entity B* (gatekeeper B* or endpoint B*) in IP network;
- Scenario AB*2: Entity A* (endpoint A) in IP network, entity B* (PINX B) in PISN;
- Scenario BC*1: Entity B* (PINX B) in PISN, entity C* (gatekeeper C* or endpoint C*) in IP network;
- Scenario BC*2: Entity B* (gatekeeper B* or endpoint B*) in IP network, combined entities C*/C' (PINX C) in PISN;
- Scenario B*1: Entity B* (PINX B) in PISN, entity B' (endpoint B) in IP network;
- Scenario B*2: Entity B* (gatekeeper B* or endpoint B*) in IP network, entity B' (PINX B) in PISN.

It is possible for more than one scenario to apply to the same call e.g., scenarios BC*1 and B*1 if entity B* is in the PISN and entities B' and C* are in the IP network.

A point of interworking will be implemented in a gateway, which acts as both an H.323 endpoint from the point of view of the IP network and an end PINX from the point of view of the PISN. Single step call transfer entities can be located in the gateway but are logically separate from the point of interworking. For example, if user B is in the PISN and users A and C are in the IP network, entity B* could be located in the gateway on the IP network side of the interworking point, with entity B' in the PISN (PINX B). Logically interworking would still be taking place on leg B*.

6.1.4 Determination of the location of entities when interworking

6.1.4.1 Transfer by consultation

Entities A, B' and C' are always located in the network of the user concerned. The locations of entities B and C are determined as follows.

If user A and therefore entity A are in the QSIG network at PINX A and PINX A implements only transfer by join or chooses to perform transfer by join, entities B and C will be located at PINX A. Interworking will occur on leg B and/or leg C, depending on the location of users B and C. This is shown in figure 11.

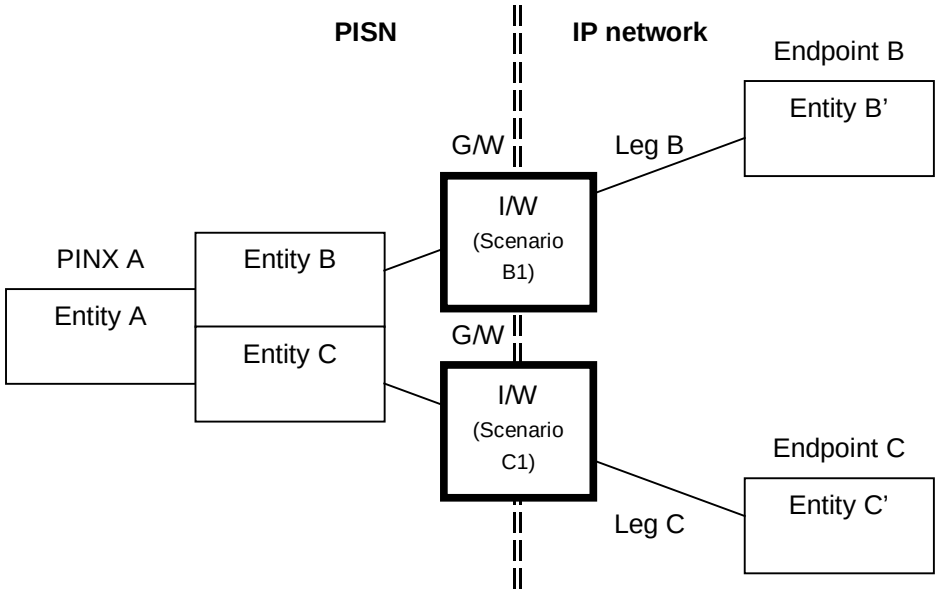

Figure 11 – Interworking – transfer by join in a PISN

© ISO/IEC 2001 – All rights reserved

Copyright International Organization for Standardization
Provided by IHS under license with ISO
No reproduction or networking permitted without license from IHS
Not for Resale

If user A and therefore entity A are in the QSIG network at PINX A and PINX A performs transfer by rerouteing, if user B is in the IP network the gateway between user A's network and user B's network can choose, on receipt of a transfer request from PINX A, whether to provide entity B (in which case interworking occurs on leg B) or to instruct the IP network to provide entity B (in which case interworking occurs on leg AB).

Similarly, if user C is in the IP network the gateway between user A's network and user B's network can choose, on receipt of a transfer identify request from PINX A, whether to provide entity C (in which case interworking occurs on leg C) or to instruct the IP network to provide entity C (in which case interworking occurs on leg AC).

Figure 12 and figure 13 show the two cases where the two gateways make the same decision. If the two gateways make different decisions, interworking will also occur on leg BC. The case where entity B is in the PISN and entity C is in the IP network is shown in figure 14. The reverse case is not shown.

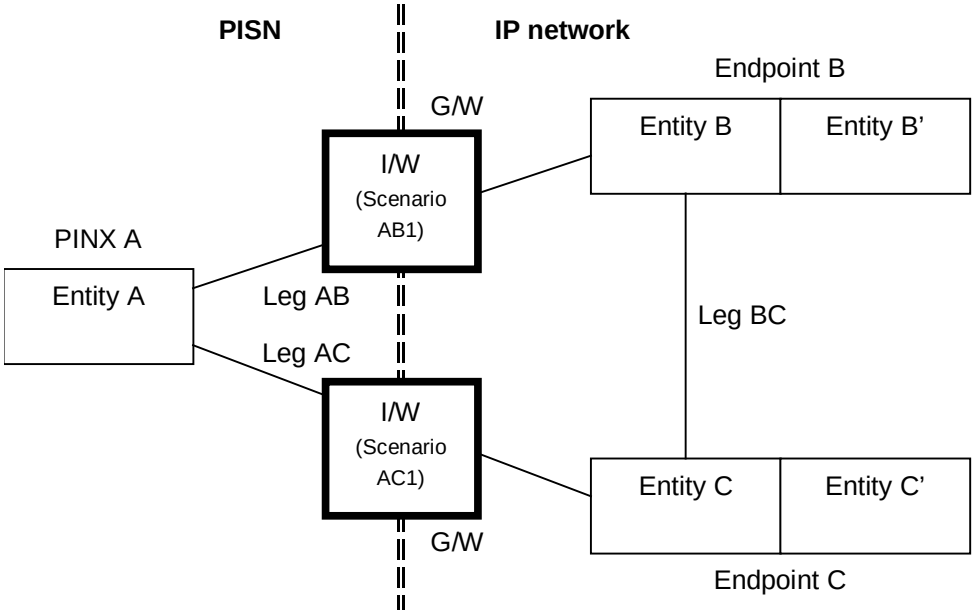

Figure 12 – Interworking – transfer by rerouteing between PINX A and endpoints B and C in the IP network

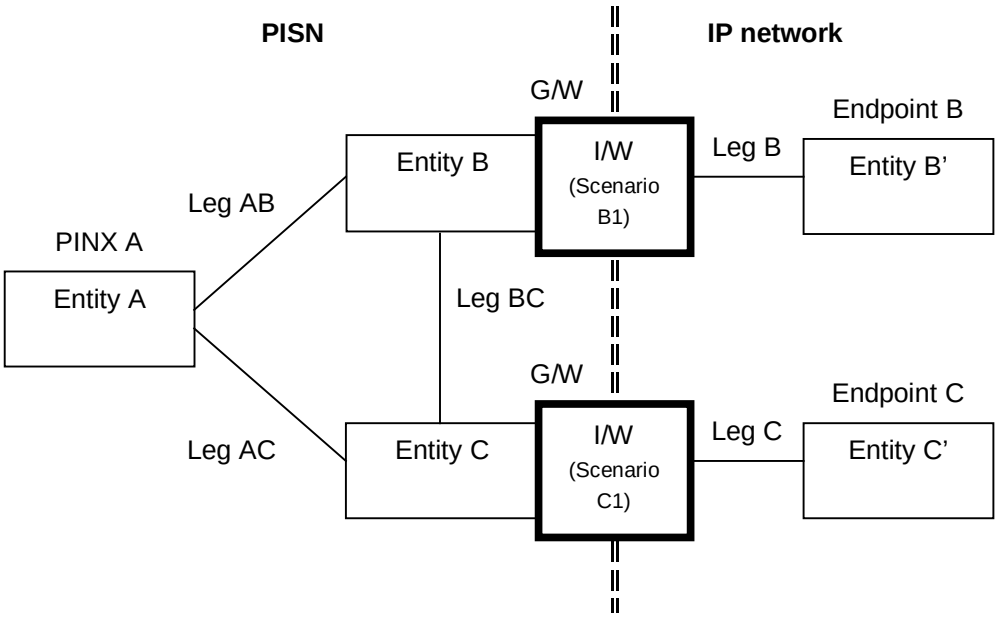

Figure 13 – Interworking – transfer by rerouteing between PINX A and two gateways

© ISO/IEC 2001 – All rights reserved

Copyright International Organization for Standardization
Provided by IHS under license with ISO
No reproduction or networking permitted without license from IHS
Not for Resale

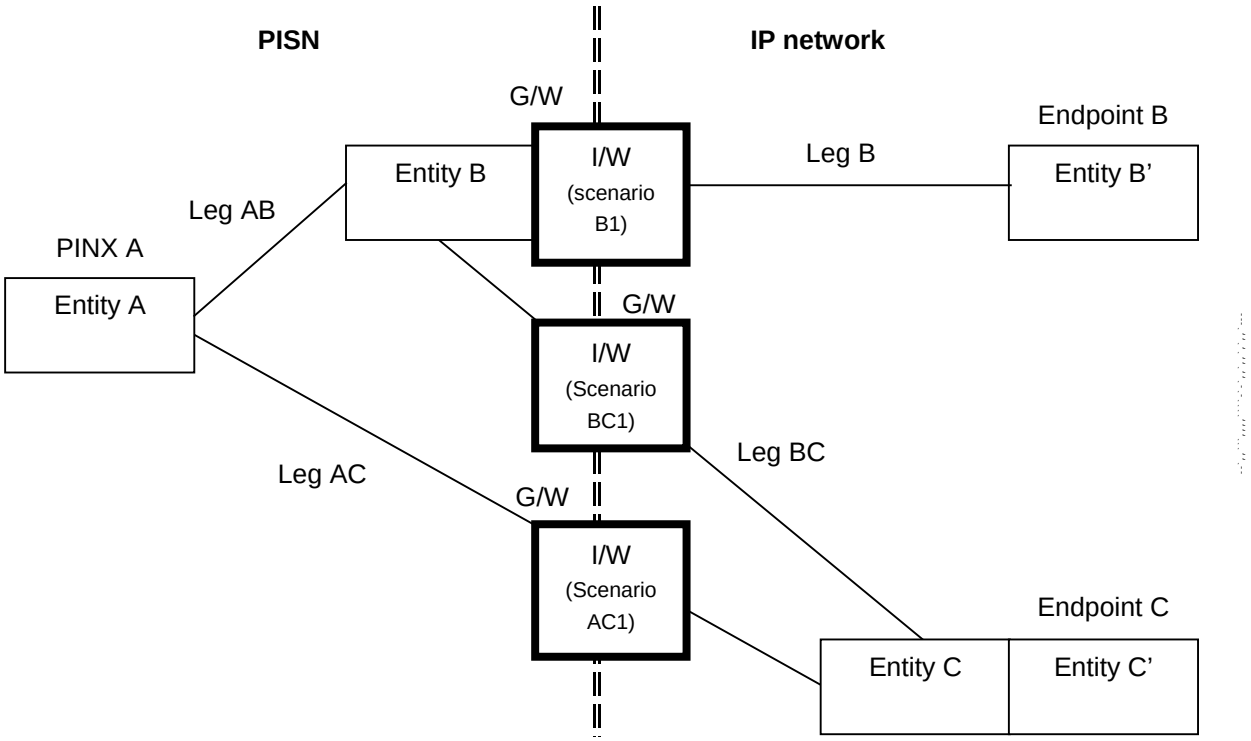

Figure 14 – Interworking – transfer by rerouteing –between PINX A, entity B in a gateway and entity C in the IP network

If user A and therefore entity A are in the IP network at endpoint A, if user B is in the PISN the gateway between user A's network and user B's network can choose, on receipt of a transfer request from endpoint A, whether to provide entity B (in which case interworking occurs on leg B) or to instruct the PISN to provide entity B (in which case interworking occurs on leg AB). The latter requires support for transfer by rerouteing in the PISN.

Similarly, if user C is in the PISN the gateway between user A's network and user C's network can choose, on receipt of a transfer identify request from endpoint A, whether to provide entity C (in which case interworking occurs on leg C) or to instruct the PISN to provide entity C (in which case interworking occurs on leg AC). The latter requires support for transfer by rerouteing in the PISN. If the two gateways make different decisions, interworking will also occur on leg BC.

Figure 15 and figure 16 show the two cases where the two gateways make the same decision. If the two gateways make different decisions (not shown), interworking will also occur on leg BC.

© ISO/IEC 2001 – All rights reserved

Copyright International Organization for Standardization
Provided by IHS under license with ISO
No reproduction or networking permitted without license from IHS
Not for Resale

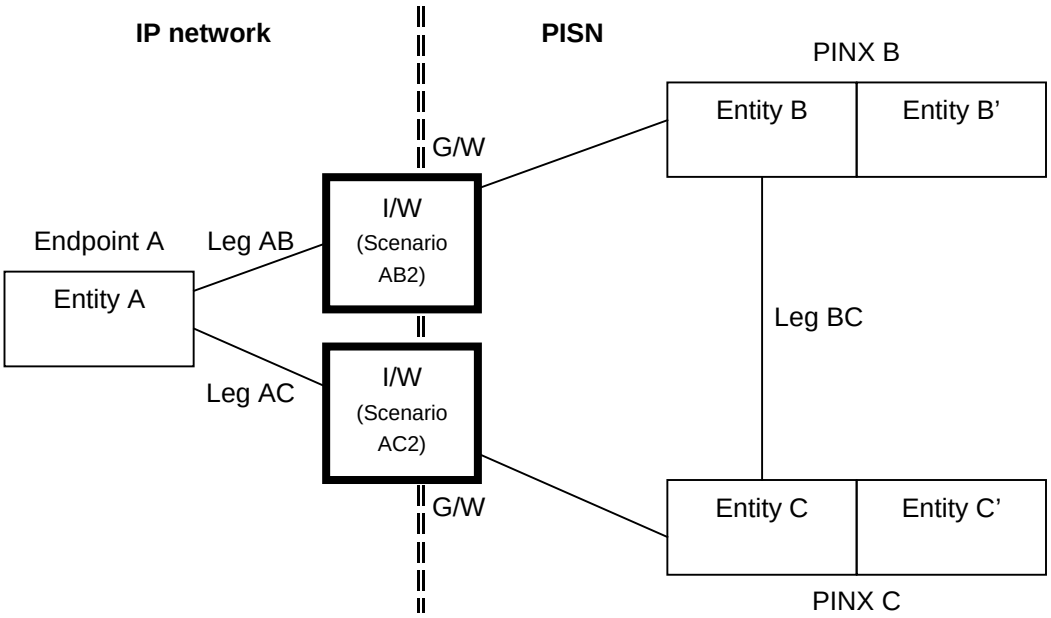

Figure 15 – Interworking – transfer by rerouteing between endpoint A in the IP network and PINXs B and C

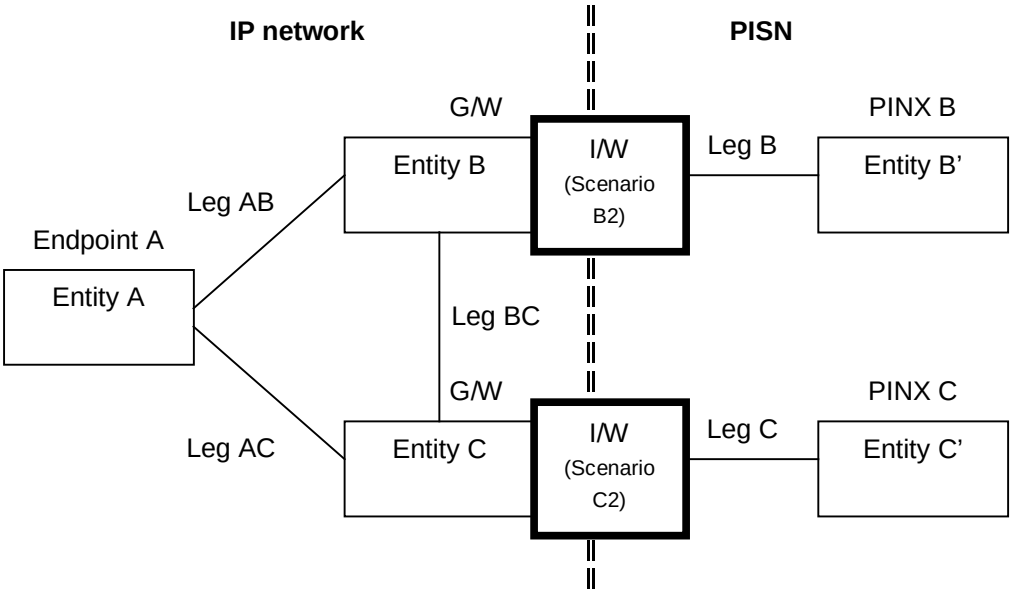

Figure 16 – Interworking – transfer by rerouteing between endpoint A in the IP network and two gateways

In cases where a gateway can choose whether to provide entity B or entity C functionality, the gateway's decision is an implementation matter. This can, but need not, take account of the user C or user B respectively. The behaviour of entity B or entity C, if provided at the gateway, is outside the scope of this International Standard and is assumed to be in accordance with the requirements of ISO/IEC 13869 (when entity A is in the PISN) or in accordance with the requirements of H.450.2 (when entity A is in the IP network).

© ISO/IEC 2001 – All rights reserved

Copyright International Organization for Standardization
Provided by IHS under license with ISO
No reproduction or networking permitted without license from IHS
Not for Resale

6.1.4.2 Single step call transfer

Entities A*, B' C* and C' are always located in the network of the user concerned. The location of entity B* is determined as follows.

If user A and therefore entity A* are in the QSIG network at PINX A entity B* may be located at PINX A. Interworking will occur on leg B* and/or leg BC*, depending on the location of users B and C.

If user B is in the IP network, the gateway between user A's network and user B's network can choose, on receipt of a transfer request from PINX A, whether to provide entity B* (in which case interworking occurs on leg B*) or to instruct the IP network to provide entity B* (in which case interworking occurs on leg AB*).

Figure 17 shows the case where entity B* is provided by the gateway. Figure 18 shows the case where entity B* is provided by the IP network.

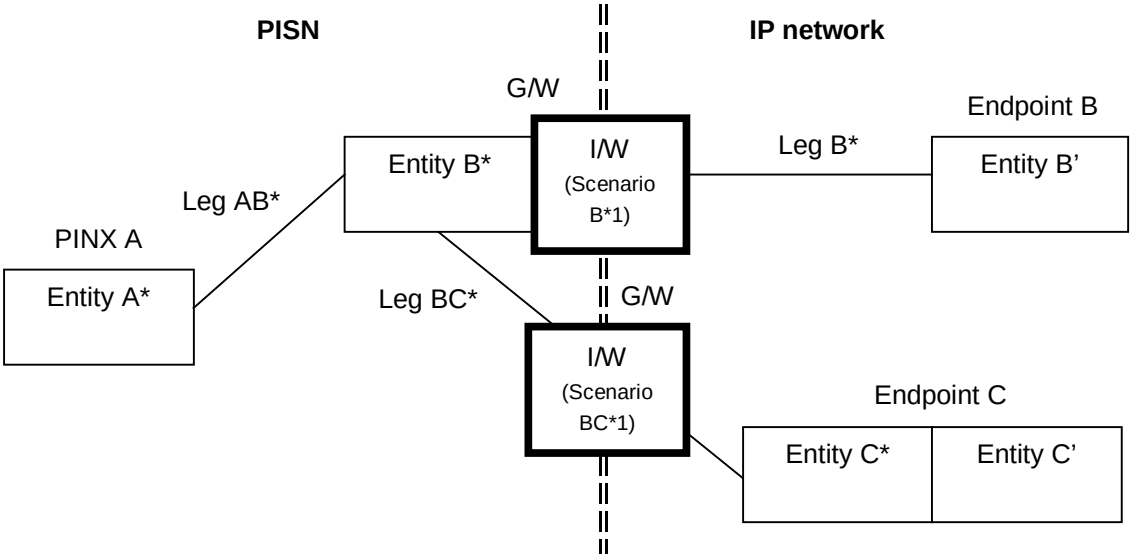

Figure 17 – Interworking – single step call transfer in a PISN

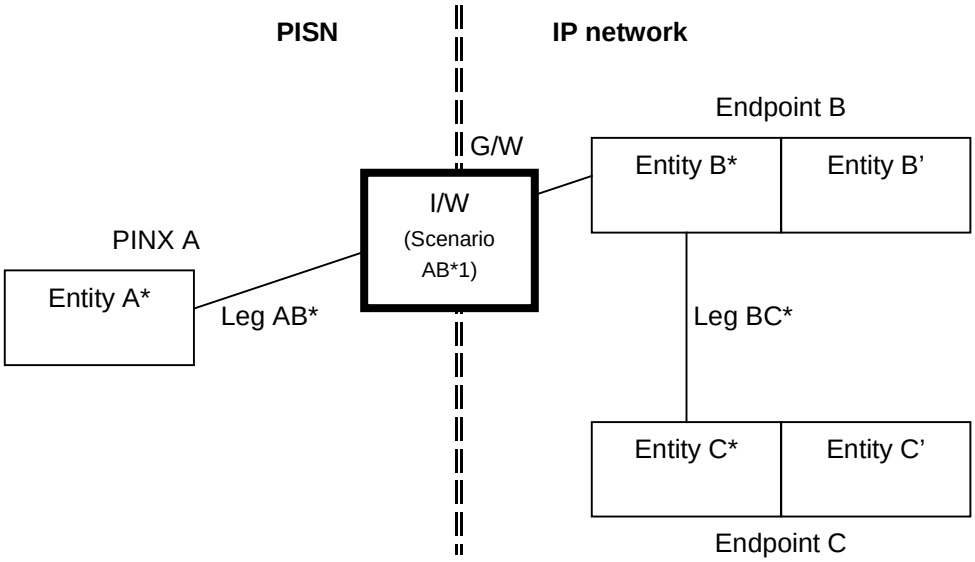

Figure 18 – Interworking – single step call transfer between PINX A and endpoints B and C in the IP network

Also, in the case where entity B* is provided by the IP network and user C is in the PISN, interworking will also occur on leg BC*. This case is not shown.

© ISO/IEC 2001 – All rights reserved

Copyright International Organization for Standardization
Provided by IHS under license with ISO
No reproduction or networking permitted without license from IHS
Not for Resale

If user A and therefore entity A* are in the IP network at endpoint A, if user B is in the PISN the gateway between user A's network and user B's network can choose, on receipt of a transfer request from endpoint A, whether to provide entity B* (in which case interworking occurs on leg B*) or to instruct the PISN to provide entity B* (in which case interworking occurs on leg AB*). These are shown in figure 19 and figure 20.

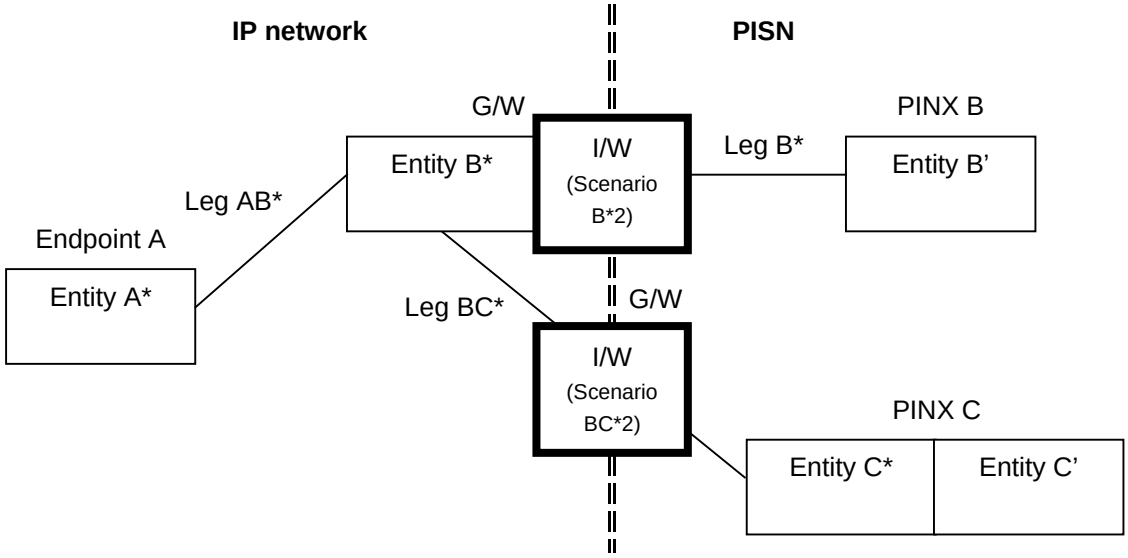

Figure 19 – Interworking – single step call transfer between endpoint A in the IP network and two gateways

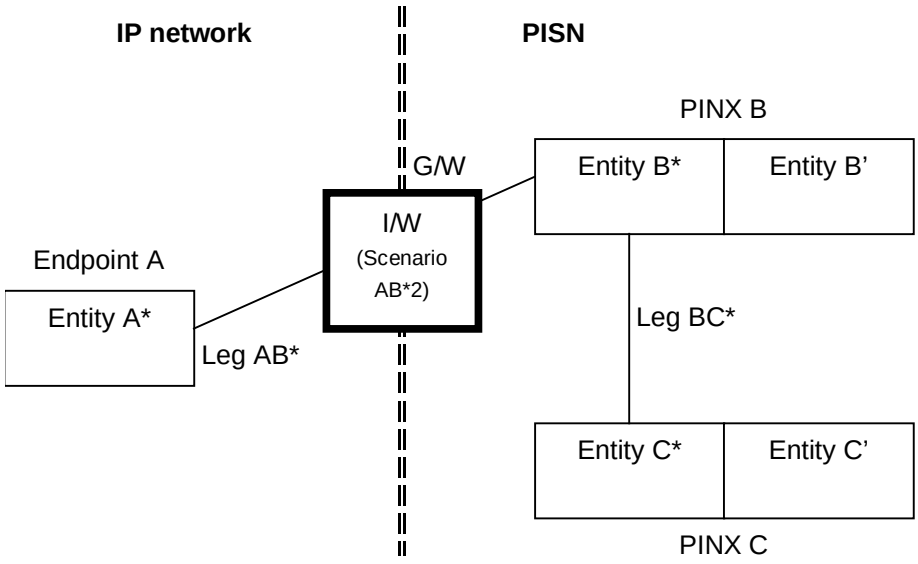

Figure 20 – Interworking – single step call transfer between endpoint A in the IP network and PINXs B and C

Also, in the case where entity B* is provided by the PISN and user C is in the IP network, interworking will also occur on leg BC*. This case is not shown.

In cases where a gateway can choose whether to provide entity B* functionality, the gateway's decision is an implementation matter. This can, but need not, take account of the location of user C. The behaviour of entity B*, if provided at the gateway, is outside the scope of this International Standard and is assumed to be in accordance with the requirements of ISO/IEC 19460 (when entity A* is in the PISN) or in accordance with the requirements of H.450.2 (when entity A* is in the IP network).

© ISO/IEC 2001 – All rights reserved

--`,,```,,,,````-`-`,,`,,`,`,,`---

Copyright International Organization for Standardization
Provided by IHS under license with ISO
No reproduction or networking permitted without license from IHS
Not for Resale

6.2 Service architecture for activation, deactivation and interrogation

6.2.1 QSIG service architecture

6.2.1.1 ISO/IEC 13869 service architecture

Not applicable.

6.2.1.2 ISO/IEC 19460 service architecture

Not applicable.

6.2.2 H.450.2 service architecture

Not applicable.

6.2.3 Scenarios for interworking

Not applicable.

7 Protocol interworking – General requirements

Protocol interworking between H.323 and QSIG for call transfer supplementary services shall be in accordance with ISO/IEC 21409, as modified by the requirements of clauses 8 and 9 below.

When transmitting an APDU in one protocol as a result of receiving the corresponding APDU in the other protocol, the mapping of elements in the received APDU to corresponding elements in the transmitted APDU shall be in accordance with ISO/IEC 21409.

8 Protocol interworking – Messages and APDUs

In the rules specified below for the different scenarios, the following shall apply:

1. If the required action is to transmit a QSIG or H.323 FACILITY message but the call state does not permit a FACILITY message to be sent at that time, the action to be taken is an implementation matter.
2. If the required action is to include an APDU in a transmitted QSIG or H.323 message conditional upon that message being transmitted and that message is not to be transmitted (owing to basic call interworking considerations), the action to be taken is an implementation matter.

Annex B shows in diagrammatic form some typical message sequences for some of the scenarios identified in this International Standard.

8.1 Scenario AB1

A gateway that supports scenario AB1 shall behave in accordance with the rules of table 1, by carrying out the required action when a given condition occurs. Each condition applies to the receipt of a QSIG message from entity A, or receipt of an H.323 message from entity B.

Table 1 – Message and APDU handling requirements for scenario AB1

Rule	Condition	Required action
1	Receipt of a QSIG FACILITY message containing a QSIG callTransferInitiate invoke APDU while the QSIG call is in the active state.	Transmit an H.323 FACILITY message containing an H.323 callTransferInitiate invoke APDU if the H.323 call state permits.
2	Receipt of an H.323 RELEASE COMPLETE message containing an H.323 callTransferInitiate return result APDU in response to an H.323 callTransferInitiate invoke APDU.	If a QSIG DISCONNECT message is to be transmitted, include in the QSIG DISCONNECT message a QSIG callTransferInitiate return result APDU.
3	Receipt of an H.323 FACILITY message containing an H.323 callTransferInitiate return error APDU in response to an H.323 callTransferInitiate invoke APDU.	Transmit a QSIG FACILITY message containing a QSIG callTransferInitiate return error APDU if the QSIG call state permits.

© ISO/IEC 2001 – All rights reserved

Copyright International Organization for Standardization
Provided by IHS under license with ISO
No reproduction or networking permitted without license from IHS
Not for Resale

8.2 Scenario AB2

A gateway that supports scenario AB2 shall behave in accordance with the rules of table 2, by carrying out the required action when a given condition occurs. Each condition applies to the receipt of an H.323 message from entity A, or receipt of a QSIG message from entity B.

Table 2 – Message and APDU handling requirements for scenario AB2

Rule	Condition	Required action
1	Receipt of an H.323 FACILITY message containing an H.323 callTransferInitiate invoke APDU while the H.323 call is in the active state.	If the callIdentity element in the H.323 callTransferInitiate invoke APDU is not empty, transmit a QSIG FACILITY message containing a QSIG callTransferInitiate invoke APDU if the QSIG call state permits. If the callIdentity element in the H.323 callTransferInitiate invoke APDU is empty, refer to the rules in 8.12, or reject the request if single step call transfer is not supported.
2	Receipt of a QSIG DISCONNECT message containing a QSIG callTransferInitiate return result APDU in response to a QSIG callTransferInitiate invoke APDU.	If an H.323 RELEASE COMPLETE message is to be transmitted, include in the H.323 RELEASE COMPLETE message an H.323 callTransferInitiate return result APDU.
3	Receipt of a QSIG FACILITY message containing a QSIG callTransferInitiate return error APDU in response to a QSIG callTransferInitiate invoke APDU.	Transmit an H.323 FACILITY message containing an H.323 callTransferInitiate return error APDU if the H.323 call state permits.

8.3 Scenario AC1

A gateway that supports scenario AC1 shall behave in accordance with the rules of table 3, by carrying out the required action when a given condition occurs. Each condition applies to the receipt of a QSIG message from entity A, or receipt of an H.323 message from entity C.

Table 3 – Message and APDU handling requirements for scenario AC1

Rule	Condition	Required action
1	Receipt of a QSIG FACILITY message containing a QSIG callTransferIdentify invoke APDU while the QSIG call is either in the call received state or in the active state.	Transmit an H.323 FACILITY message containing an H.323 callTransferIdentify invoke APDU if the H.323 call state permits.
2	Receipt of an H.323 FACILITY message containing an H.323 callTransferIdentify return result APDU in response to an H.323 callTransferIdentify invoke APDU.	Transmit a QSIG FACILITY message containing a QSIG callTransferIdentify return result APDU if the QSIG call state permits.
3	Receipt of a QSIG FACILITY message containing a QSIG callTransferAbandon invoke APDU.	Transmit an H.323 FACILITY message containing an H.323 callTransferAbandon invoke APDU if the H.323 call state permits.
4	Receipt of an H.323 FACILITY message containing an H.323 callTransferIdentify return error APDU in response to an H.323 callTransferIdentify invoke APDU.	Transmit a QSIG FACILITY message containing a QSIG callTransferIdentify return error APDU if the QSIG call state permits.

© ISO/IEC 2001 – All rights reserved

Copyright International Organization for Standardization
Provided by IHS under license with ISO
No reproduction or networking permitted without license from IHS
Not for Resale

8.4 Scenario AC2

A gateway that supports scenario AC2 shall behave in accordance with the rules of table 4, by carrying out the required action when a given condition occurs. Each condition applies to the receipt of an H.323 message from entity A, or receipt of a QSIG message from entity C.

Table 4 – Message and APDU handling requirements for scenario AC2

Rule	Condition	Required action
1	Receipt of an H.323 FACILITY message containing an H.323 callTransferIdentify invoke APDU while the H.323 call is either in the call received state or in the active state.	Transmit a QSIG FACILITY message containing a QSIG callTransferIdentify invoke APDU if the QSIG call state permits.
2	Receipt of a QSIG FACILITY message containing a QSIG callTransferIdentify return result APDU in response to a QSIG callTransferIdentify invoke APDU.	Transmit an H.323 FACILITY message containing an H.323 callTransferIdentify return result APDU if the H.323 call state permits.
3	Receipt of an H.323 FACILITY message containing an H.323 callTransferAbandon invoke APDU.	Transmit a QSIG FACILITY message containing a QSIG callTransferAbandon invoke APDU if the QSIG call state permits.
4	Receipt of a QSIG FACILITY message containing a QSIG callTransferIdentify return error APDU in response to a QSIG callTransferIdentify invoke APDU.	Transmit an H.323 FACILITY message containing an H.323 callTransferIdentify return error APDU if the H.323 call state permits.

© ISO/IEC 2001 – All rights reserved

Copyright International Organization for Standardization
Provided by IHS under license with ISO
No reproduction or networking permitted without license from IHS
Not for Resale

8.5 Scenario BC1

A gateway that supports scenario BC1 shall behave in accordance with the rules of table 5, by carrying out the required action when a given condition occurs. Each condition applies to the receipt of a QSIG message from entity B, or receipt of an H.323 message from entity C.

Table 5 – Message and APDU handling requirements for scenario BC1

Rule	Condition	Required action
1	Receipt of a QSIG SETUP message containing a QSIG callTransferSetup invoke APDU.	If an H.323 SETUP message is to be transmitted, include in the H.323 SETUP message an H.323 callTransferSetup invoke APDU. If the QSIG SETUP message also contains a QSIG callTransferUpdate invoke APDU, include an H.323 callTransferUpdate invoke APDU in the H.323 SETUP message.
2	Receipt of an H.323 ALERTING message containing an H.323 callTransferSetup return result APDU in response to an H.323 callTransferSetup invoke APDU.	If a QSIG ALERTING message is to be transmitted, include in the QSIG ALERTING message a QSIG callTransferSetup return result APDU. If the H.323 ALERTING message also contains an H.323 callTransferUpdate invoke APDU, include a QSIG callTransferUpdate invoke APDU in the QSIG ALERTING message.
3	Receipt of an H.323 CONNECT message containing an H.323 callTransferSetup return result APDU in response to an H.323 callTransferSetup invoke APDU.	If a QSIG CONNECT message is to be transmitted, include in the QSIG CONNECT message a QSIG callTransferSetup return result APDU. If the H.323 CONNECT message also contains an H.323 callTransferUpdate invoke APDU, include a QSIG callTransferUpdate invoke APDU in the QSIG CONNECT message.
4	Receipt of a QSIG FACILITY message containing a QSIG subaddressTransfer invoke APDU.	Transmit an H.323 FACILITY message containing an H.323 subaddressTransfer invoke APDU if the H.323 call state permits.
5	Receipt of an H.323 FACILITY message containing an H.323 subaddressTransfer invoke APDU.	Transmit a QSIG FACILITY message containing a QSIG subaddressTransfer invoke APDU if the QSIG call state permits.
6	Receipt of an H.323 RELEASE COMPLETE message containing an H.323 callTransferSetup return error APDU in response to an H.323 callTransferSetup invoke APDU.	If a QSIG DISCONNECT message is to be transmitted, include in the QSIG DISCONNECT message a QSIG callTransferSetup return error APDU.

© ISO/IEC 2001 – All rights reserved

--`,,```,,,,````-`-`,,`,,`,`,,`---

Copyright International Organization for Standardization
Provided by IHS under license with ISO
No reproduction or networking permitted without license from IHS
Not for Resale

8.6 Scenario BC2

A gateway that supports scenario BC2 shall behave in accordance with the rules of table 6, by carrying out the required action when a given condition occurs. Each condition applies to the receipt of an H.323 message from entity B, or receipt of a QSIG message from entity C.

Table 6 – Message and APDU handling requirements for scenario BC2

Rule	Condition	Required action
1	Receipt of an H.323 SETUP message containing an H.323 callTransferSetup invoke APDU.	If the callIdentity element in the H.323 callTransferSetup invoke APDU is not empty, then if a QSIG SETUP message is to be transmitted, include in the QSIG SETUP message a QSIG callTransferSetup invoke APDU. If the H.323 SETUP message also contains an H.323 callTransferUpdate invoke APDU, include a QSIG callTransferUpdate invoke APDU in the QSIG SETUP message. If the callIdentity element in the H.323 callTransferSetup invoke APDU is empty, refer to the rules in 8.14, or reject the request if single step call transfer is not supported.
2	Receipt of a QSIG ALERTING message containing a QSIG callTransferSetup return result APDU in response to a QSIG callTransferSetup invoke APDU.	If an H.323 ALERTING message is to be transmitted, include in the H.323 ALERTING message an H.323 callTransferSetup return result APDU. If the QSIG ALERTING message also contains a QSIG callTransferUpdate invoke APDU, include an H.323 callTransferUpdate invoke APDU in the H.323 ALERTING message.
3	Receipt of a QSIG CONNECT message containing a QSIG callTransferSetup return result APDU in response to a QSIG callTransferSetup invoke APDU.	If an H.323 CONNECT message is to be transmitted, include in the H.323 CONNECT message an H.323 callTransferSetup return result APDU. If the QSIG CONNECT message also contains a QSIG callTransferUpdate invoke APDU, include an H.323 callTransferUpdate invoke APDU in the H.323 CONNECT message.
4	Receipt of a QSIG FACILITY message containing a QSIG subaddressTransfer invoke APDU.	Transmit an H.323 FACILITY message containing an H.323 subaddressTransfer invoke APDU if the H.323 call state permits.
5	Receipt of an H.323 FACILITY message containing an H.323 subaddressTransfer invoke APDU.	Transmit a QSIG FACILITY message containing a QSIG subaddressTransfer invoke APDU if the QSIG call state permits.
6	Receipt of a QSIG call clearing message containing a QSIG callTransferSetup return error APDU in response to a QSIG callTransferSetup invoke APDU.	If an H.323 RELEASE COMPLETE message is to be transmitted, include in the H.323 RELEASE COMPLETE message an H.323 callTransferSetup return error APDU.

© ISO/IEC 2001 – All rights reserved

Copyright International Organization for Standardization
Provided by IHS under license with ISO
No reproduction or networking permitted without license from IHS
Not for Resale

8.7 Scenario B1

A gateway that supports scenario B1 shall behave in accordance with the rules of table 7, by carrying out the required action when a given condition occurs. Each condition applies to the receipt of a QSIG message from entity B, or receipt of an H.323 message from entity B'.

Table 7 – Message and APDU handling requirements for scenario B1

Rule	Condition	Required action
1	Receipt of a QSIG FACILITY message containing a QSIG callTransferComplete invoke APDU.	Transmit an H.323 FACILITY message containing an H.323 callTransferComplete invoke APDU if the H.323 call state permits. If the QSIG FACILITY message also contains a QSIG callTransferUpdate APDU, then include an H.323 callTransferUpdate invoke APDU in the H.323 FACILITY message.
2	Receipt of a QSIG FACILITY message containing a QSIG callTransferUpdate invoke APDU.	Transmit an H.323 FACILITY message containing an H.323 callTransferUpdate invoke APDU if the H.323 call state permits.
3	Receipt of an H.323 FACILITY message containing an H.323 callTransferUpdate invoke APDU.	Transmit a QSIG FACILITY message containing a QSIG callTransferUpdate invoke APDU if the QSIG call state permits.
4	Receipt of a QSIG FACILITY message containing a QSIG subaddressTransfer invoke APDU.	Transmit an H.323 FACILITY message containing an H.323 subaddressTransfer invoke APDU if the H.323 call state permits.
5	Receipt of an H.323 FACILITY message containing an H.323 subaddressTransfer invoke APDU.	Transmit a QSIG FACILITY message containing a QSIG subaddressTransfer invoke APDU if the QSIG call state permits.
6	Receipt of a QSIG FACILITY message containing a QSIG callTransferActive invoke APDU.	Transmit an H.323 FACILITY message containing an H.323 callTransferActive invoke APDU if the H.323 call state permits.

© ISO/IEC 2001 – All rights reserved

Copyright International Organization for Standardization
Provided by IHS under license with ISO
No reproduction or networking permitted without license from IHS
Not for Resale

8.8 Scenario B2

A gateway that supports scenario B2 shall behave in accordance with the rules of table 8, by carrying out the required action when a given condition occurs. Each condition applies to the receipt of a QSIG message from entity B', or receipt of an H.323 message from entity B.

Table 8 – Message and APDU handling requirements for scenario B2

Rule	Condition	Required action
1	Receipt of an H.323 FACILITY message containing an H.323 callTransferComplete invoke APDU.	Transmit a QSIG FACILITY message containing a QSIG callTransferComplete invoke APDU if the QSIG call state permits. If the H.323 FACILITY message also contains an H.323 callTransferUpdate APDU, then include a QSIG callTransferUpdate invoke APDU in the QSIG FACILITY message.
2	Receipt of a QSIG FACILITY message containing a QSIG callTransferUpdate invoke APDU.	Transmit an H.323 FACILITY message containing an H.323 callTransferUpdate invoke APDU if the H.323 call state permits.
3	Receipt of an H.323 FACILITY message containing an H.323 callTransferUpdate invoke APDU.	Transmit a QSIG FACILITY message containing a QSIG callTransferUpdate invoke APDU if the QSIG call state permits.
4	Receipt of a QSIG FACILITY message containing a QSIG subaddressTransfer invoke APDU.	Transmit an H.323 FACILITY message containing an H.323 subaddressTransfer invoke APDU if the H.323 call state permits.
5	Receipt of an H.323 FACILITY message containing an H.323 subaddressTransfer invoke APDU.	Transmit a QSIG FACILITY message containing a QSIG subaddressTransfer invoke APDU if the QSIG call state permits.
6	Receipt of an H.323 FACILITY message containing an H.323 callTransferActive invoke APDU.	Transmit a QSIG FACILITY message containing a QSIG callTransferActive invoke APDU if the H.323 call state permits.

© ISO/IEC 2001 – All rights reserved

--`,,```,,,,````-`-`,,`,,`,`,,`---

Copyright International Organization for Standardization
Provided by IHS under license with ISO
No reproduction or networking permitted without license from IHS
Not for Resale

8.9 Scenario C1

A gateway that supports scenario C1 shall behave in accordance with the rules of table 9, by carrying out the required action when a given condition occurs. Each condition applies to the receipt of a QSIG message from entity C, or receipt of an H.323 message from entity C'.

Table 9 – Message and APDU handling requirements for scenario C1

Rule	Condition	Required action
1	Receipt of a QSIG FACILITY message containing a QSIG callTransferComplete invoke APDU.	Transmit an H.323 FACILITY message containing an H.323 callTransferComplete invoke APDU if the H.323 call state permits. If the QSIG FACILITY message also contains a QSIG callTransferUpdate APDU, then include an H.323 callTransferUpdate invoke APDU in the H.323 FACILITY message.
2	Receipt of a QSIG FACILITY message containing a QSIG callTransferUpdate invoke APDU.	Transmit an H.323 FACILITY message containing an H.323 callTransferUpdate invoke APDU if the H.323 call state permits.
3	Receipt of an H.323 FACILITY message containing an H.323 callTransferUpdate invoke APDU.	Transmit a QSIG FACILITY message containing a QSIG callTransferUpdate invoke APDU if the QSIG call state permits.
4	Receipt of a QSIG FACILITY message containing a QSIG subaddressTransfer invoke APDU.	Transmit an H.323 FACILITY message containing an H.323 subaddressTransfer invoke APDU if the H.323 call state permits.
5	Receipt of an H.323 FACILITY message containing an H.323 subaddressTransfer invoke APDU.	Transmit a QSIG FACILITY message containing a QSIG subaddressTransfer invoke APDU if the QSIG call state permits.

© ISO/IEC 2001 – All rights reserved

Copyright International Organization for Standardization
Provided by IHS under license with ISO
No reproduction or networking permitted without license from IHS
Not for Resale

8.10 Scenario C2

A gateway that supports scenario C2 shall behave in accordance with the rules of table 10, by carrying out the required action when a given condition occurs. Each condition applies to the receipt of a QSIG message from entity C', or receipt of an H.323 message from entity C.

Table 10 – Message and APDU handling requirements for scenario C2

Rule	Condition	Required action
1	Receipt of an H.323 FACILITY message containing an H.323 callTransferComplete invoke APDU.	Transmit a QSIG FACILITY message containing a QSIG callTransferComplete invoke APDU if the QSIG call state permits. If the H.323 FACILITY message also contains an H.323 callTransferUpdate APDU, then include a QSIG callTransferUpdate invoke APDU in the QSIG FACILITY message.
2	Receipt of a QSIG FACILITY message containing a QSIG callTransferUpdate invoke APDU.	Transmit an H.323 FACILITY message containing an H.323 callTransferUpdate invoke APDU if the H.323 call state permits.
3	Receipt of an H.323 FACILITY message containing an H.323 callTransferUpdate invoke APDU.	Transmit a QSIG FACILITY message containing a QSIG callTransferUpdate invoke APDU if the QSIG call state permits.
4	Receipt of a QSIG FACILITY message containing a QSIG subaddressTransfer invoke APDU.	Transmit an H.323 FACILITY message containing an H.323 subaddressTransfer invoke APDU if the H.323 call state permits.
5	Receipt of an H.323 FACILITY message containing an H.323 subaddressTransfer invoke APDU.	Transmit a QSIG FACILITY message containing a QSIG subaddressTransfer invoke APDU if the QSIG call state permits.

8.11 Scenario AB*1

A gateway that supports scenario AB*1 shall behave in accordance with the rules of table 11, by carrying out the required action when a given condition occurs. Each condition applies to the receipt of a QSIG message from entity A*, or receipt of an H.323 message from entity B*.

Table 11 – Message and APDU handling requirements for scenario AB*1

Rule	Condition	Required action
1	Receipt of a QSIG FACILITY message containing a QSIG ssctInitiate invoke APDU while the QSIG call is in the active state.	Transmit an H.323 FACILITY message containing an H.323 callTransferInitiate invoke APDU if the H.323 call state permits.
2	Receipt of an H.323 RELEASE COMPLETE message containing an H.323 callTransferInitiate return result APDU in response to an H.323 callTransferInitiate invoke APDU.	If a QSIG DISCONNECT message is to be transmitted, include in the QSIG DISCONNECT message a QSIG ssctInitiate return result APDU.
3	Receipt of an H.323 FACILITY message containing an H.323 callTransferInitiate return error APDU in response to an H.323 callTransferInitiate invoke APDU.	Transmit a QSIG FACILITY message containing a QSIG ssctInitiate return error APDU if the QSIG call state permits.

© ISO/IEC 2001 – All rights reserved

Copyright International Organization for Standardization
Provided by IHS under license with ISO
No reproduction or networking permitted without license from IHS
Not for Resale

8.12 Scenario AB*2

A gateway that supports scenario AB*2 shall behave in accordance with the rules of table 12, by carrying out the required action when a given condition occurs. Each condition applies to the receipt of an H.323 message from entity A*, or receipt of a QSIG message from entity B*.

Table 12 – Message and APDU handling requirements for scenario AB*2

Rule	Condition	Required action
1	Receipt of an H.323 FACILITY message containing an H.323 callTransferInitiate invoke APDU while the H.323 call is in the active state.	If the callIdentity element in the H.323 callTransferInitiate invoke APDU is empty, transmit a QSIG FACILITY message containing a QSIG ssctInitiate invoke APDU if the QSIG call state permits. If callIdentity element in the H.323 callTransferInitiate invoke APDU is not empty, refer to the rules in 8.2, or reject the request if call transfer by consultation is not supported.
2	Receipt of a QSIG DISCONNECT message containing a QSIG ssctInitiate return result APDU in response to a QSIG ssctInitiate invoke APDU.	If an H.323 RELEASE COMPLETE message is to be transmitted, include in the H.323 RELEASE COMPLETE message an H.323 callTransferInitiate return result APDU.
3	Receipt of a QSIG FACILITY message containing a QSIG ssctInitiate return error APDU in response to a QSIG ssctInitiate invoke APDU.	Transmit an H.323 FACILITY message containing an H.323 callTransferInitiate return error APDU if the H.323 call state permits.

© ISO/IEC 2001 – All rights reserved

Copyright International Organization for Standardization
Provided by IHS under license with ISO
No reproduction or networking permitted without license from IHS
Not for Resale

8.13 Scenario BC*1

A gateway that supports scenario BC*1 shall behave in accordance with the rules of table 13, by carrying out the required action when a given condition occurs. Each condition applies to the receipt of a QSIG message from entity B*, or receipt of an H.323 message from entity C*.

Table 13 – Message and APDU handling requirements for scenario BC*1

Rule	Condition	Required action
1	Receipt of a QSIG SETUP message containing a QSIG ssctSetup invoke APDU.	If an H.323 SETUP message is to be transmitted, include in the H.323 SETUP message an H.323 callTransferSetup invoke APDU.
2	Receipt of an H.323 ALERTING message containing an H.323 callTransferSetup return result APDU in response to an H.323 callTransferSetup invoke APDU.	Discard the H.323 callTransferSetup return result APDU. . If the H.323 ALERTING message contains an H.323 callTransferUpdate invoke APDU, then if a QSIG ALERTING message is to be transmitted, include in the QSIG ALERTING message a QSIG callTransferUpdate invoke APDU.
3	Receipt of an H.323 CONNECT message containing an H.323 callTransferSetup return result APDU in response to an H.323 callTransferSetup invoke APDU.	Discard the H.323 callTransferSetup return result APDU. If the H.323 CONNECT message contains an H.323 callTransferUpdate invoke APDU, then if a QSIG CONNECT message is to be transmitted, include in the QSIG CONNECT message a QSIG callTransferUpdate invoke APDU.
4	Receipt of a QSIG FACILITY message containing a QSIG subaddressTransfer invoke APDU.	Transmit an H.323 FACILITY message containing an H.323 subaddressTransfer invoke APDU if the H.323 call state permits.
5	Receipt of an H.323 FACILITY message containing an H.323 subaddressTransfer invoke APDU.	Transmit a QSIG FACILITY message containing a QSIG subaddressTransfer invoke APDU if the QSIG call state permits.
6	Receipt of an H.323 RELEASE COMPLETE message containing an H.323 callTransferSetup return error APDU in response to an H.323 callTransferSetup invoke APDU.	Discard the H.323 callTransferSetup return error APDU..

© ISO/IEC 2001 – All rights reserved

Copyright International Organization for Standardization
Provided by IHS under license with ISO
No reproduction or networking permitted without license from IHS
Not for Resale

8.14 Scenario BC*2

A gateway that supports scenario BC*2 shall behave in accordance with the rules of table 14, by carrying out the required action when a given condition occurs. Each condition applies to the receipt of an H.323 message from entity B*, or receipt of a QSIG message from entity C*.

Table 14 – Message and APDU handling requirements for scenario BC*2

Rule	Condition	Required action
1	Receipt of an H.323 SETUP message containing an H.323 callTransferSetup invoke APDU.	If the callIdentity element in the H.323 callTransferSetup invoke APDU is empty, then if a QSIG SETUP message is to be transmitted, include in the QSIG SETUP message a QSIG ssctSetup invoke APDU. If callIdentity element in the H.323 callTransferSetup invoke APDU is not empty, refer to the rules in 8.6, or reject the request if call transfer by consultation is not supported.
2	Receipt of a QSIG ALERTING message in response to a QSIG ssctSetup invoke APDU.	If an H.323 ALERTING message is to be transmitted, include in the H.323 ALERTING message an H.323 callTransferSetup return result APDU. If the QSIG ALERTING message contains a QSIG callTransferUpdate invoke APDU, include an H.323 callTransferUpdate invoke APDU in the H.323 ALERTING message.
3	Receipt of a QSIG CONNECT message in response to a QSIG ssctSetup invoke APDU.	If an H.323 CONNECT message is to be transmitted and an H.323 callTransferSetup return result APDU has not already been included in an H.323 ALERTING message, then include in the H.323 CONNECT message an H.323 callTransferSetup return result APDU. If the QSIG CONNECT message contains a QSIG callTransferUpdate invoke APDU, include an H.323 callTransferUpdate invoke APDU in the H.323 CONNECT message.
4	Receipt of a QSIG FACILITY message containing a QSIG subaddressTransfer invoke APDU.	Transmit an H.323 FACILITY message containing an H.323 subaddressTransfer invoke APDU if the H.323 call state permits.
5	Receipt of an H.323 FACILITY message containing an H.323 subaddressTransfer invoke APDU.	Transmit a QSIG FACILITY message containing a QSIG subaddressTransfer invoke APDU if the QSIG call state permits.
6	Receipt of a QSIG call clearing message in response to a QSIG ssctSetup invoke APDU.	If an H.323 RELEASE COMPLETE message is to be transmitted, include in the H.323 RELEASE COMPLETE message an H.323 callTransferSetup return error APDU.

© ISO/IEC 2001 – All rights reserved

Copyright International Organization for Standardization
Provided by IHS under license with ISO
No reproduction or networking permitted without license from IHS
Not for Resale

8.15 Scenario B*1

A gateway that supports scenario B*1 shall behave in accordance with the rules of table 15, by carrying out the required action when a given condition occurs. Each condition applies to the receipt of a QSIG message from entity B*, or receipt of an H.323 message from entity B'.

Table 15 – Message and APDU handling requirements for scenario B*1

Rule	Condition	Required action
1	Receipt of a QSIG FACILITY message containing a QSIG callTransferComplete invoke APDU.	Transmit an H.323 FACILITY message containing an H.323 callTransferComplete invoke APDU if the H.323 call state permits. If the QSIG FACILITY message also contains a QSIG callTransferUpdate APDU, then include an H.323 callTransferUpdate invoke APDU in the H.323 FACILITY message.
2	Receipt of a QSIG FACILITY message containing a QSIG ssctPostDial invoke APDU.	Discard the QSIG ssctPostDial invoke APDU. If further APDUs are present, then subject to rules 3, 5 and 7, transmit an H.323 FACILITY message if the H.323 call state permits.
3	Receipt of a QSIG FACILITY message containing a QSIG callTransferUpdate invoke APDU.	Transmit an H.323 FACILITY message containing an H.323 callTransferUpdate invoke APDU if the H.323 call state permits.
4	Receipt of an H.323 FACILITY message containing an H.323 callTransferUpdate invoke APDU.	Transmit a QSIG FACILITY message containing a QSIG callTransferUpdate invoke APDU if the QSIG call state permits.
5	Receipt of a QSIG FACILITY message containing a QSIG subaddressTransfer invoke APDU.	Transmit an H.323 FACILITY message containing an H.323 subaddressTransfer invoke APDU if the H.323 call state permits.
6	Receipt of an H.323 FACILITY message containing an H.323 subaddressTransfer invoke APDU.	Transmit a QSIG FACILITY message containing a QSIG subaddressTransfer invoke APDU if the QSIG call state permits.
7	Receipt of a QSIG FACILITY message containing a QSIG callTransferActive invoke APDU.	Transmit an H.323 FACILITY message containing an H.323 callTransferActive invoke APDU if the H.323 call state permits.

© ISO/IEC 2001 – All rights reserved

Copyright International Organization for Standardization
Provided by IHS under license with ISO
No reproduction or networking permitted without license from IHS
Not for Resale

8.16 Scenario B*2

A gateway that supports scenario B*2 shall behave in accordance with the rules of table 16, by carrying out the required action when a given condition occurs. Each condition applies to the receipt of a QSIG message from entity B*, or receipt of an H.323 message from entity B'.

Table 16 – Message and APDU handling requirements for scenario B*2

Rule	Condition	Required action
1	Receipt of an H.323 FACILITY message containing an H.323 callTransferComplete invoke APDU.	Transmit a QSIG FACILITY message containing a QSIG callTransferComplete invoke APDU if the QSIG call state permits. If the H.323 FACILITY message also contains an H.323 callTransferUpdate APDU, then include a QSIG callTransferUpdate invoke APDU in the QSIG FACILITY message.
2	Receipt of a QSIG FACILITY message containing a QSIG callTransferUpdate invoke APDU.	Transmit an H.323 FACILITY message containing an H.323 callTransferUpdate invoke APDU if the H.323 call state permits.
3	Receipt of an H.323 FACILITY message containing an H.323 callTransferUpdate invoke APDU.	Transmit a QSIG FACILITY message containing a QSIG callTransferUpdate invoke APDU if the QSIG call state permits.
4	Receipt of a QSIG FACILITY message containing a QSIG subaddressTransfer invoke APDU.	Transmit an H.323 FACILITY message containing an H.323 subaddressTransfer invoke APDU if the H.323 call state permits.
5	Receipt of an H.323 FACILITY message containing an H.323 subaddressTransfer invoke APDU.	Transmit a QSIG FACILITY message containing a QSIG subaddressTransfer invoke APDU if the QSIG call state permits.
6	Receipt of an H.323 FACILITY message containing an H.323 callTransferActive invoke APDU.	Transmit a QSIG FACILITY message containing a QSIG callTransferActive invoke APDU if the H.323 call state permits.

9 Protocol interworking – Content of APDUs

This clause contains the requirements for the mapping of elements that are not covered by the general requirements in clause 7.

Rules are provided only for elements that are mandatory in at least one of the protocols. Optional elements may be discarded if received.

9.1 APDU content mapping from QSIG to H.323

9.1.1 QSIG ssctInitiate invoke APDU mapping to H.323 callTransferInitiate invoke APDU

A gateway that supports scenario AB*1, when transmitting an H.323 callTransferInitiate invoke APDU as a result of receiving a QSIG ssctInitiate invoke APDU, shall map elements in accordance with table 17.

Table 17 – QSIG ssctInitiate invoke APDU mapping to H.323 callTransferInitiate invoke APDU

QSIG element name "(M)" denotes mandatory element	H.323 element name "(M)" denotes mandatory element	Mapping requirement
N/A	callIdentity (M)	Encode as empty (size 0) to denote invocation of single step call transfer.
transferredAddress (M)	N/A	Discard.
awaitConnect (M)	N/A	Discard.

© ISO/IEC 2001 – All rights reserved

--`,,```,,,,````-`-`,,`,,`,`,,`---

Copyright International Organization for Standardization
Provided by IHS under license with ISO
No reproduction or networking permitted without license from IHS
Not for Resale

9.1.2 QSIG ssctSetup invoke APDU mapping to H.323 callTransferSetup invoke APDU

A gateway that supports scenario BC*1, when transmitting an H.323 callTransferSetup invoke APDU as a result of receiving a QSIG ssctSetup invoke APDU, shall map elements in accordance with table 18.

Table 18 – QSIG ssctSetup invoke APDU mapping to H.323 callTransferSetup invoke APDU

QSIG element name "(M)" denotes mandatory element	H.323 element name "(M)" denotes mandatory element	Mapping requirement
N/A	callIdentity (M)	Encode as empty (size 0).

9.2 APDU content mapping from H.323 to QSIG

9.2.1 H.323 callTransferInitiate invoke APDU mapping to QSIG ssctInitiate invoke APDU

A gateway that supports scenario AB*2, when transmitting a QSIG ssctInitiate invoke APDU as a result of receiving an H.323 callTransferInitiate invoke APDU, shall map elements in accordance with table 19.

Table 19 – H.323 callTransferInitiate invoke APDU mapping to QSIG ssctInitiate invoke APDU

H.323 element name "(M)" denotes mandatory element	QSIG element name "(M)" denotes mandatory element	Mapping requirement
callIdentity (M)	N/A	Discard.
N/A	transferredAddress (M)	The availability of the information to be included in this element will depend on implementation. Include the information if available or include the indication "notAvailableDueToInterworking" if the information is not available.
N/A	awaitConnect	Encode with the value set to FALSE, i.e. release the original call on receipt of the ALERTING message.

9.2.2 H.323 callTransferSetup invoke APDU mapping to QSIG ssctSetup invoke APDU

A gateway that supports scenario BC*2, when transmitting a QSIG ssctSetup invoke APDU as a result of receiving an H.323 callTransferSetup invoke APDU, shall map elements in accordance with table 20.

Table 20 – H.323 callTransferSetup invoke APDU mapping to QSIG ssctSetup invoke APDU

H.323 element name "(M)" denotes mandatory element	QSIG element name "(M)" denotes mandatory element	Mapping requirement
callIdentity (M)	N/A	Discard.

© ISO/IEC 2001 – All rights reserved

Copyright International Organization for Standardization
Provided by IHS under license with ISO
No reproduction or networking permitted without license from IHS
Not for Resale

Annex A

(normative)

Implementation Conformance Statement (ICS) proforma

A.1 Introduction

The supplier of an implementation which is claimed to conform to this International Standard shall complete the following Implementation Conformance Statement (ICS) proforma.

A completed ICS proforma is the ICS for the implementation in question. The ICS is a statement of which capabilities and options have been implemented for a given specification.

The ICS can have a number of uses, including use:

- by the implementor, as a check list for implementations to reduce the risk of unintended non-conformance, e.g. through oversight;
- by the supplier and acquirer, or potential acquirer, of the implementation, as a detailed indication of the capabilities of the implementation, stated relative to the common basis for understanding provided by the Standard's ICS proforma;
- by the user or potential user of the implementation, as a basis for initially checking the possibility of interworking with another implementation - while interworking can never be guaranteed, failure to interwork can often be predicted from incompatible ICS;
- by a tester, as the basis for selecting appropriate tests against which to assess the claim for conformance of the implementation.

A.2 Instructions for completing the ICS proforma

A.2.1 General structure of the ICS proforma

The ICS proforma is a fixed format questionnaire divided into sub-clauses each containing a group of individual items. Each item is identified by an item reference, the description of the item (question to be answered), and the reference(s) to the clause(s) that specifies (specify) the item in the main body of this International Standard.

The "Conditions for Status" column contains a specification, if appropriate, of the predicate upon which a conditional status is based. The indication of an item reference in this column indicates a simple-predicate condition (support of this item is dependent on the support marked for the referenced item).

The “Status” column indicates whether an item is applicable and if so whether support is mandatory or optional. The following terms are used:

I irrelevant or out-of-scope - this capability is outside the scope of the standard to which this ICS proforma applies and is not subject to conformance testing in this context;

M mandatory (the capability is required for conformance to the standard);

N/A not applicable - in the given context, it is impossible to use the capability; no answer in the support column is required;

O optional (the capability is not required for conformance to the standard, but if the capability is implemented it is required to conform to the specification in this International Standard);

O.<n> qualified optional - in this case, <n> is an integer that identifies a unique group of related optional items; if no additional qualification is indicated, the support of at least one of the optional items is required for conformance to this International Standard; otherwise, the qualification and logic of the selection among the optional items is defined below the table explicitly;

X excluded or prohibited - there is a requirement not to use this capability in a given context.

© ISO/IEC 2001 – All rights reserved

Copyright International Organization for Standardization
Provided by IHS under license with ISO
No reproduction or networking permitted without license from IHS Not for Resale

Answers to the questionnaire items are to be provided in the “Support” column, by simply marking an answer to indicate a restricted choice (Yes, No or N/A). In specific cases, the indication of explicit values may be requested. Where a support column box is left blank, no answer is required.

If a "prerequisite line" (see A.2.4 below) is used after a subclause heading or table title, and its predicate is false, no answer is required for the whole subclause or table, respectively.

A.2.2 Additional Information

Items of Additional Information allow a supplier to provide further information intended to assist the interpretation of the ICS. It is not intended or expected that a large quantity will be supplied, and an ICS can be considered complete without any such information. Examples might be an outline of the ways in which a (single) implementation can be set up to operate in a variety of environments and configurations.

References to items of Additional Information may be entered next to any answer in the questionnaire, and may be included in items of Exception Information.

A.2.3 Exception Information

It may occasionally happen that a supplier will wish to answer an item with mandatory or prohibited status (after any conditions have been applied) in a way that conflicts with the indicated requirement. No pre-printed answer will be found in the Support column for this. Instead, the supplier is required to write into the support column an x.<i> reference to an item of Exception Information, and to provide the appropriate rationale in the Exception item itself.

An implementation for which an Exception item is required in this way does not conform to this International Standard. A possible reason for the situation described above is that a defect in the standard has been reported, a correction for which is expected to change the requirement not met by the implementation.

A.2.4 Further indications of the ICS proforma tables

In addition to the columns of a table, the following information may be indicated:

"Prerequisite line"

A prerequisite line after a subclause heading or table title indicates that the whole subclause or the whole table is not required to be completed if the predicate is false.

"Qualification"

At the end of a table, a detailed qualification for a group of optional items may be indicated, as specified in the description of the status "qualified optional" in A.2.1.

"Comments"

This box at the end of a table allows a supplier to enter any comments to that table. Comments may also be provided separately (without using this box).

© ISO/IEC 2001 – All rights reserved

-`,,```,,,,````-`-`,,`,,`,`,,`---
Copyright International Organization for Standardization
Provided by IHS under license with ISO
No reproduction or networking permitted without license from IHS
Not for Resale

A.3 Identification of the Implementation

A.3.1 Implementation Identification

Supplier (Note 1)	
Contact point for queries about the ICS (Note 1)	
Implementation Name(s) and Version(s) (Note 1, Note 2)	
Other information necessary for full identification - e.g., name(s) and version(s) for machines and/or operating systems; System name(s)	

NOTE 1 - Only the first three items are required for all implementations; other information may be completed as appropriate in meeting the requirement for full identification.

NOTE 2 - The terms Name and Version should be interpreted appropriately to correspond with a suppliers terminology (e.g. Type, Series, Model).

A.3.2 Specification for which this ICS applies

Title	Corporate telecommunication networks – Signalling interworking between QSIG and H.323 – Generic functional protocol for the support of supplementary services
Version	1.0
Corrigenda Implemented (if applicable)	
Addenda Implemented (if applicable)	
Amendments Implemented (if applicable)	
Have any exception items been required ?	No[ ]Yes[ ] (The answer Yes means that the implementation does not conform to this International Standard) (Note)
Date of Statement	
NOTE: In this case, an explanation shall be given of the nature of non-conformance either below or on a separate sheet of paper. Nature of non-conformance (if applicable):	

--`,,```,,,,````-`-`,,`,,`,`,,`---
© ISO/IEC 2001 – All rights reserved

Copyright International Organization for Standardization
Provided by IHS under license with ISO
No reproduction or networking permitted without license from IHS
Not for Resale

A.4 Major capabilities

Table A.1 - Major capabilities

Item	Question: Does the implementation...	Conditions for status	Status	Reference	Support
MC1	support transfer by consultation		O.1		[ ]Yes [ ]No
MC2	support single step call transfer		O.1		[ ]Yes [ ]No
MC3	support QSIG transfer by join	MC1	M	ISO/IEC 13869	[ ]Yes
MC4	support QSIG transfer by rerouteing	MC1	O	ISO/IEC 13869	[ ]Yes [ ]No
MC5	support QSIG single step call transfer	MC2	M	ISO/IEC 19460–	[ ]Yes
MC6	support H.450.2 transfer by consultation	MC1	M	H.450.2	[ ]Yes
MC7	support H.450.2 Single Step call transfer	MC2	M	H.450.2	[ ]Yes
MC8	support provision of entity B for handling transfer by rerouteing requests received from the PISN	MC4	O	6.1.4.1	[ ]Yes [ ]No
MC9	support provision of entity C for handling transfer by rerouteing identify requests from the PISN	MC4	O	6.1.4.1	[ ]Yes [ ]No
MC10	support provision of entity B for handling transfer by consultation requests received from the IP network	MC6 AND MC4 MC6 AND NOT MC4	O M	6.1.4.1	[ ]Yes [ ]No [ ]Yes
MC11	support provision of entity C for handling transfer by consultation requests received from the IP network	MC6 AND MC4 MC6 AND NOT MC4	O M	6.1.4.1	[ ]Yes [ ]No [ ]Yes
MC12	support provision of entity B* for handling single step call transfer requests received from the PISN	MC2	O	6.1.4.2	[ ]Yes [ ]No
MC13	support provision of entity C* for handling single step call transfer requests from the PISN	MC2	O	6.1.4.2	[ ]Yes [ ]No
MC14	support provision of entity B* for handling single step call transfer requests received from the IP network	MC2	O	6.1.4.2	[ ]Yes [ ]No
MC15	support provision of entity C* for handling single step call transfer call establishment requests received from the IP network	MC2	O	6.1.4.2	[ ]Yes [ ]No
MC16	support scenario AB1	MC4 AND MC8 MC4 AND NOT MC8	O M	6.1.3.1	[ ]Yes [ ]No [ ]Yes

© ISO/IEC 2001 – All rights reserved

Copyright International Organization for Standardization
Provided by IHS under license with ISO
No reproduction or networking permitted without license from IHS
Not for Resale

Item	Question: Does the implementation...	Conditions for status	Status	Reference	Support
MC17	support scenario AB2	MC4 AND MC10 MC4 AND NOT MC10	O M	6.1.3.1	[ ]Yes [ ]No [ ]Yes
MC18	support scenario AC1	MC4 AND MC9 MC4 AND NOT MC9	O M	6.1.3.1	[ ]Yes [ ]No [ ]Yes
MC19	support scenario AC2	MC4 AND MC11 MC4 AND NOT MC11	O M	6.1.3.1	[ ]Yes [ ]No [ ]Yes
MC20	support scenario BC1	MC4	M	6.1.3.1	[ ]Yes
MC21	support scenario BC2	MC4	M	6.1.3.1	[ ]Yes
MC22	support scenario B1	MC1	M	6.1.3.1	[ ]Yes
MC23	support scenario B2	MC1	M	6.1.3.1	[ ]Yes
MC24	support scenario C1	MC1	M	6.1.3.1	[ ]Yes
MC25	support scenario C2	MC1	M	6.1.3.1	[ ]Yes
MC26	support scenario AB*1	MC2 AND MC12 MC2 AND NOT MC12	O M	6.1.3.2	[ ]Yes [ ]No [ ]Yes
MC27	support scenario AB*2	MC2 AND MC14 MC2 AND NOT MC14	O M	6.1.3.2	[ ]Yes [ ]No [ ]Yes
MC28	support scenario BC*1	MC2 AND MC13 MC2 AND NOT MC13	O M	6.1.3.2	[ ]Yes [ ]No [ ]Yes
MC29	support scenario BC*2	MC2 AND MC15 MC2 AND NOT MC15	O M	6.1.3.2	[ ]Yes [ ]No [ ]Yes
MC30	support scenario B*1	MC2	M	6.1.3.2	[ ]Yes
MC31	support scenario B*2	MC2	M	6.1.3.2	[ ]Yes
Comments:					

A.5 General requirements

Table A.2 - General requirements for protocol interworking

Item	Question: Does the implementation...	Conditions for status	Status	Reference	Support
GR1	perform protocol interworking in accordance with ISO/IEC 21409		M	7	[ ]Yes
Comments:					

© ISO/IEC 2001 – All rights reserved

Copyright International Organization for Standardization
Provided by IHS under license with ISO
No reproduction or networking permitted without license from IHS
Not for Resale

A.6 Message and APDU handling

A.6.1 Message and APDU handling for scenario AB1

Table A.3 - Message and APDU handling for scenario AB1

Item	Question: Does the implementation...	Conditions for status	Status	Reference	Support
MAB1 1	behave in accordance with rule 1 for scenario AB1	MC16	M	8.1	[ ]Yes
MAB1 2	behave in accordance with rule 2 for scenario AB1	MC16	M	8.1	[ ]Yes
MAB1 3	behave in accordance with rule 3 for scenario AB1	MC16	M	8.1	[ ]Yes
Comments:					

A.6.2 Message and APDU handling for scenario AB2

Table A.4 - Message and APDU handling for scenario AB2

Item	Question: Does the implementation...	Conditions for status	Status	Reference	Support
MAB2 1	behave in accordance with rule 1 for scenario AB2	MC17	M	8.2	[ ]Yes
MAB2 2	behave in accordance with rule 2 for scenario AB2	MC17	M	8.2	[ ]Yes
MAB2 3	behave in accordance with rule 3 for scenario AB2	MC17	M	8.2	[ ]Yes
Comments:					

© ISO/IEC 2001 – All rights reserved

Copyright International Organization for Standardization
Provided by IHS under license with ISO
No reproduction or networking permitted without license from IHS
Not for Resale

A.6.3 Message and APDU handling for scenario AC1

Table A.5 - Message and APDU handling for scenario AC1

Item	Question: Does the implementation...	Conditions for status	Status	Reference	Support
MAC1 1	behave in accordance with rule 1 for scenario AC1	MC18	M	8.3	[ ]Yes
MAC1 2	behave in accordance with rule 2 for scenario AC1	MC18	M	8.3	[ ]Yes
MAC1 3	behave in accordance with rule 3 for scenario AC1	MC18	M	8.3	[ ]Yes
MAC1 4	behave in accordance with rule 4 for scenario AC1	MC18	M	8.3	[ ]Yes
Comments:					

A.6.4 Message and APDU handling for scenario AC2

Table A.6 - Message and APDU handling for scenario AC2

Item	Question: Does the implementation...	Conditions for status	Status	Reference	Support
MAC2 1	behave in accordance with rule 1 for scenario AC2	MC19	M	8.4	[ ]Yes
MAC2 2	behave in accordance with rule 2 for scenario AC2	MC19	M	8.4	[ ]Yes
MAC2 3	behave in accordance with rule 3 for scenario AC2	MC19	M	8.4	[ ]Yes
MAC2 4	behave in accordance with rule 4 for scenario AC2	MC19	M	8.4	[ ]Yes
Comments:					

© ISO/IEC 2001 – All rights reserved

Copyright International Organization for Standardization
Provided by IHS under license with ISO
No reproduction or networking permitted without license from IHS
Not for Resale

A.6.5 Message and APDU handling for scenario BC1

Table A.7 - Message and APDU handling for scenario BC1

Item	Question: Does the implementation...	Conditions for status	Status	Reference	Support
MBC1 1	behave in accordance with rule 1 for scenario BC1	MC20	M	8.5	[ ]Yes
MBC1 2	behave in accordance with rule 2 for scenario BC1	MC20	M	8.5	[ ]Yes
MBC1 3	behave in accordance with rule 3 for scenario BC1	MC20	M	8.5	[ ]Yes
MBC1 4	behave in accordance with rule 4 for scenario BC1	MC20	M	8.5	[ ]Yes
MBC1 5	behave in accordance with rule 5 for scenario BC1	MC20	M	8.5	[ ]Yes
MBC1 6	Behave in accordance with rule 6 for scenario BC1	MC20	M	8.4	[ ]Yes
Comments:					

A.6.6 Message and APDU handling for scenario BC2

Table A.8 - Message and APDU handling for scenario BC2

Item	Question: Does the implementation...	Conditions for status	Status	Reference	Support
MBC2 1	behave in accordance with rule 1 for scenario BC2	MC21	M	8.6	[ ]Yes
MBC2 2	behave in accordance with rule 2 for scenario BC2	MC21	M	8.6	[ ]Yes
MBC2 3	behave in accordance with rule 3 for scenario BC2	MC21	M	8.6	[ ]Yes
MBC2 4	behave in accordance with rule 4 for scenario BC2	MC21	M	8.6	[ ]Yes
MBC2 5	behave in accordance with rule 5 for scenario BC2	MC21	M	8.6	[ ]Yes
MBC2 6	behave in accordance with rule 6 for scenario BC2	MC21	M	8.6	[ ]Yes
Comments:					

© ISO/IEC 2001 – All rights reserved

Copyright International Organization for Standardization
Provided by IHS under license with ISO
No reproduction or networking permitted without license from IHS
Not for Resale

A.6.7 Message and APDU handling for scenario B1

Table A.9 - Message and APDU handling for scenario B1

Item	Question: Does the implementation...	Conditions for status	Status	Reference	Support
MB1 1	behave in accordance with rule 1 for scenario B1	MC22	M	8.7	[ ]Yes
MB1 2	behave in accordance with rule 2 for scenario B1	MC22	M	8.7	[ ]Yes
MB1 3	behave in accordance with rule 3 for scenario B1	MC22	M	8.7	[ ]Yes
MB1 4	behave in accordance with rule 4 for scenario B1	MC22	M	8.7	[ ]Yes
MB1 5	behave in accordance with rule 5 for scenario B1	MC22	M	8.7	[ ]Yes
MB1 6	behave in accordance with rule 6 for scenario B1	MC22	M	8.7	[ ]Yes
Comments:					

A.6.8 Message and APDU handling for scenario B2

Table A.10 - Message and APDU handling for scenario B2

Item	Question: Does the implementation...	Conditions for status	Status	Reference	Support
MB2 1	behave in accordance with rule 1 for scenario B2	MC23	M	8.8	[ ]Yes
MB2 2	behave in accordance with rule 2 for scenario B2	MC23	M	8.8	[ ]Yes
MB2 3	behave in accordance with rule 3 for scenario B2	MC23	M	8.8	[ ]Yes
MB2 4	behave in accordance with rule 4 for scenario B2	MC23	M	8.8	[ ]Yes
MB2 5	behave in accordance with rule 5 for scenario B2	MC23	M	8.8	[ ]Yes
MB2 6	behave in accordance with rule 6 for scenario B2	MC23	M	8.8	[ ]Yes
Comments:					

© ISO/IEC 2001 – All rights reserved

Copyright International Organization for Standardization
Provided by IHS under license with ISO
No reproduction or networking permitted without license from IHS
Not for Resale

A.6.9 Message and APDU handling for scenario C1

Table A.11 - Message and APDU handling for scenario C1

Item	Question: Does the implementation...	Conditions for status	Status	Reference	Support
MC1 1	behave in accordance with rule 1 for scenario C1	MC24	M	8.9	[ ]Yes
MC1 2	behave in accordance with rule 2 for scenario C1	MC24	M	8.9	[ ]Yes
MC1 3	behave in accordance with rule 3 for scenario C1	MC24	M	8.9	[ ]Yes
MC1 4	behave in accordance with rule 4 for scenario C1	MC24	M	8.9	[ ]Yes
MC1 5	behave in accordance with rule 5 for scenario C1	MC24	M	8.9	[ ]Yes
Comments:					

A.6.10 Message and APDU handling for scenario C2

Table A.12 - Message and APDU handling for scenario C2

Item	Question: Does the implementation...	Conditions for status	Status	Reference	Support
MC2 1	behave in accordance with rule 1 for scenario C2	MC25	M	8.10	[ ]Yes
MC2 2	behave in accordance with rule 2 for scenario C2	MC25	M	8.10	[ ]Yes
MC2 3	behave in accordance with rule 3 for scenario C2	MC25	M	8.10	[ ]Yes
MC2 4	behave in accordance with rule 4 for scenario C2	MC25	M	8.10	[ ]Yes
MC2 5	behave in accordance with rule 5 for scenario C2	MC25	M	8.10	[ ]Yes
Comments:					

© ISO/IEC 2001 – All rights reserved

Copyright International Organization for Standardization
Provided by IHS under license with ISO
No reproduction or networking permitted without license from IHS
Not for Resale

A.6.11 Message and APDU handling for scenario AB*1

Table A.13 - Message and APDU handling for scenario AB*1

Item	Question: Does the implementation...	Conditions for status	Status	Reference	Support
MAB*1 1	behave in accordance with rule 1 for scenario AB*1	MC26	M	8.11	[ ]Yes
MAB*1 2	behave in accordance with rule 2 for scenario AB*1	MC26	M	8.11	[ ]Yes
MAB*1 3	behave in accordance with rule 3 for scenario AB*1	MC26	M	8.11	[ ]Yes
Comments:					

A.6.12 Message and APDU handling for scenario AB*2

Table A.14 - Message and APDU handling for scenario AB*2

Item	Question: Does the implementation...	Conditions for status	Status	Reference	Support
MAB*2 1	behave in accordance with rule 1 for scenario AB*2	MC27	M	8.12	[ ]Yes
MAB*2 2	behave in accordance with rule 2 for scenario AB*2	MC27	M	8.12	[ ]Yes
MAB*2 3	behave in accordance with rule 3 for scenario AB*2	MC27	M	8.12	[ ]Yes
Comments:					

© ISO/IEC 2001 – All rights reserved

Copyright International Organization for Standardization
Provided by IHS under license with ISO
No reproduction or networking permitted without license from IHS
Not for Resale

A.6.13 Message and APDU handling for scenario BC*1

Table A.15 - Message and APDU handling for scenario BC*1

Item	Question: Does the implementation...	Conditions for status	Status	Reference	Support
MBC*1 1	behave in accordance with rule 1 for scenario BC*1	MC28	M	8.13	[ ]Yes
MBC*1 2	behave in accordance with rule 2 for scenario BC*1	MC28	M	8.13	[ ]Yes
MBC*1 3	behave in accordance with rule 3 for scenario BC*1	MC28	M	8.13	[ ]Yes
MBC*1 4	behave in accordance with rule 4 for scenario BC*1	MC28	M	8.13	[ ]Yes
MBC*1 5	behave in accordance with rule 5 for scenario BC*1	MC28	M	8.13	[ ]Yes
MBC*1 6	behave in accordance with rule 6 for scenario BC*1	MC28	M	8.13	[ ]Yes
Comments:					

A.6.14 Message and APDU handling for scenario BC*2

Table A.16 - Message and APDU handling for scenario BC*2

Item	Question: Does the implementation...	Conditions for status	Status	Reference	Support
MBC*2 1	behave in accordance with rule 1 for scenario BC*2	MC29	M	8.14	[ ]Yes
MBC*2 2	behave in accordance with rule 2 for scenario BC*2	MC29	M	8.14	[ ]Yes
MBC*2 3	behave in accordance with rule 3 for scenario BC*2	MC29	M	8.14	[ ]Yes
MBC*2 4	behave in accordance with rule 4 for scenario BC*2	MC29	M	8.14	[ ]Yes
MBC*2 5	behave in accordance with rule 5 for scenario BC*2	MC29	M	8.14	[ ]Yes
MBC*2 6	behave in accordance with rule 6 for scenario BC*2	MC29	M	8.14	[ ]Yes
Comments:					

© ISO/IEC 2001 – All rights reserved

--`,,```,,,,````-`-`,,`,,`,`,,`---

Copyright International Organization for Standardization
Provided by IHS under license with ISO
No reproduction or networking permitted without license from IHS

Not for Resale

A.6.15 Message and APDU handling for scenario B*1

Table A.17 - Message and APDU handling for scenario B*1

Item	Question: Does the implementation...	Conditions for status	Status	Reference	Support
MB*1 1	behave in accordance with rule 1 for scenario B*1	MC30	M	8.15	[ ]Yes
MB*1 2	behave in accordance with rule 2 for scenario B*1	MC30	M	8.15	[ ]Yes
MB*1 3	behave in accordance with rule 3 for scenario B*1	MC30	M	8.15	[ ]Yes
MB*1 4	behave in accordance with rule 4 for scenario B*1	MC30	M	8.15	[ ]Yes
MB*1 5	behave in accordance with rule 5 for scenario B*1	MC30	M	8.15	[ ]Yes
MB*1 6	behave in accordance with rule 6 for scenario B*1	MC30	M	8.15	[ ]Yes
MB*1 7	behave in accordance with rule 7 for scenario B*1	MC30	M	8.15	[ ]Yes
Comments:					

A.6.16 Message and APDU handling for scenario B*2

Table A.18 - Message and APDU handling for scenario B*2

Item	Question: Does the implementation...	Conditions for status	Status	Reference	Support
MB*2 1	behave in accordance with rule 1 for scenario B*2	MC31	M	8.16	[ ]Yes
MB*2 2	behave in accordance with rule 2 for scenario B*2	MC31	M	8.16	[ ]Yes
MB*2 3	behave in accordance with rule 3 for scenario B*2	MC31	M	8.16	[ ]Yes
MB*2 4	behave in accordance with rule 4 for scenario B*2	MC31	M	8.16	[ ]Yes
MB*2 5	behave in accordance with rule 5 for scenario B*2	MC31	M	8.16	[ ]Yes
MB*2 6	behave in accordance with rule 6 for scenario B*2	MC31	M	8.16	[ ]Yes
Comments:					

© ISO/IEC 2001 – All rights reserved

Copyright International Organization for Standardization
Provided by IHS under license with ISO
No reproduction or networking permitted without license from IHS
Not for Resale

A.7 APDU content mapping

Table A.19 - APDU content mapping

Item	Question: Does the implementation...	Conditions for status	Status	Reference	Support
MAP1	behave in accordance with mapping from QSIG ssctInitiate invoke APDUs to H.323 callTransferInitiate invoke APDUs	MC26	M	9.1.1	[ ]Yes
MAP2	behave in accordance with mapping from QSIG ssctSetup invoke APDUs to H.323 callTransferSetup invoke APDUs	MC28	M	9.1.2	[ ]Yes
MAP3	behave in accordance with mapping from H.323 callTransferInitiate invoke APDUs to QSIG ssctInitiate invoke APDUs	MC27	M	9.1.3	[ ]Yes
MAP4	behave in accordance with mapping from H.323 callTransferSetup invoke APDUs to QSIG ssctSetup invoke APDUs	MC29	M	9.1.4	[ ]Yes
Comments:					

© ISO/IEC 2001 – All rights reserved

Copyright International Organization for Standardization
Provided by IHS under license with ISO
No reproduction or networking permitted without license from IHS
Not for Resale

Annex B

(informative)

Example message sequence diagrams

This annex contains some examples of typical message sequences for some of the scenarios identified in this International Standard. Although the examples shown are typical, other valid message sequences are possible.

In the figures, the arrows indicate the direction of messages. For each message, only the message name and the contained APDU (if applicable) are shown. Other message contents are not shown, in particular for unsuccessful attempts at call transfer. The following abbreviations are used:

.inv invoke APDU

.res return result APDU

B.1 Scenario AB1 or AB*1

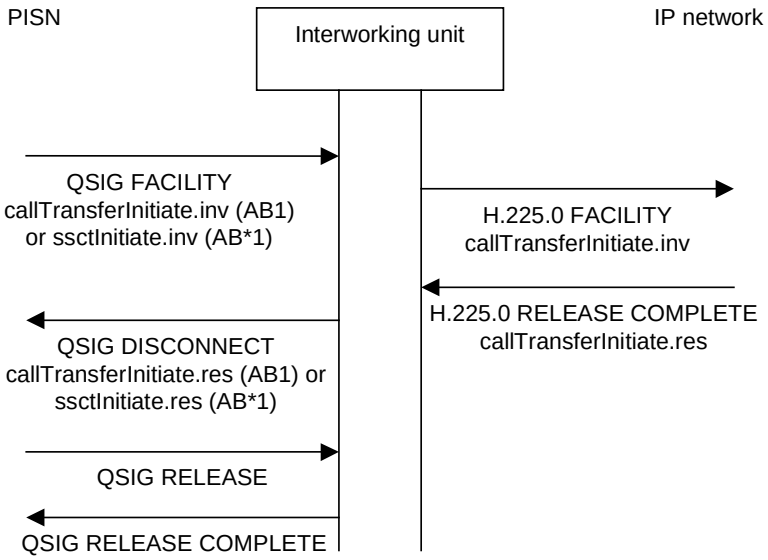

Figure B.1 – Example of scenario AB1 or AB*1

© ISO/IEC 2001 – All rights reserved

Copyright International Organization for Standardization
Provided by IHS under license with ISO
No reproduction or networking permitted without license from IHS
Not for Resale

B.2 Scenario AB2 or AB*2

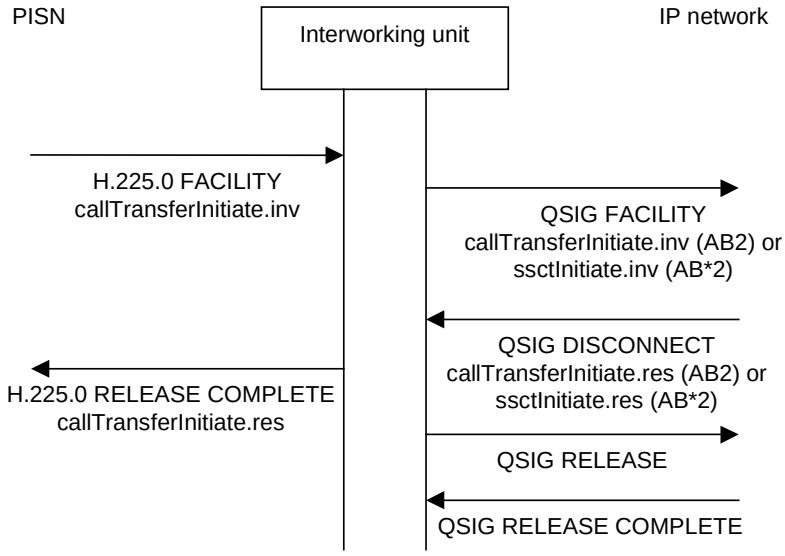

Figure B.2 – Example of scenario AB2 or AB*2

B.3 Scenario AC1

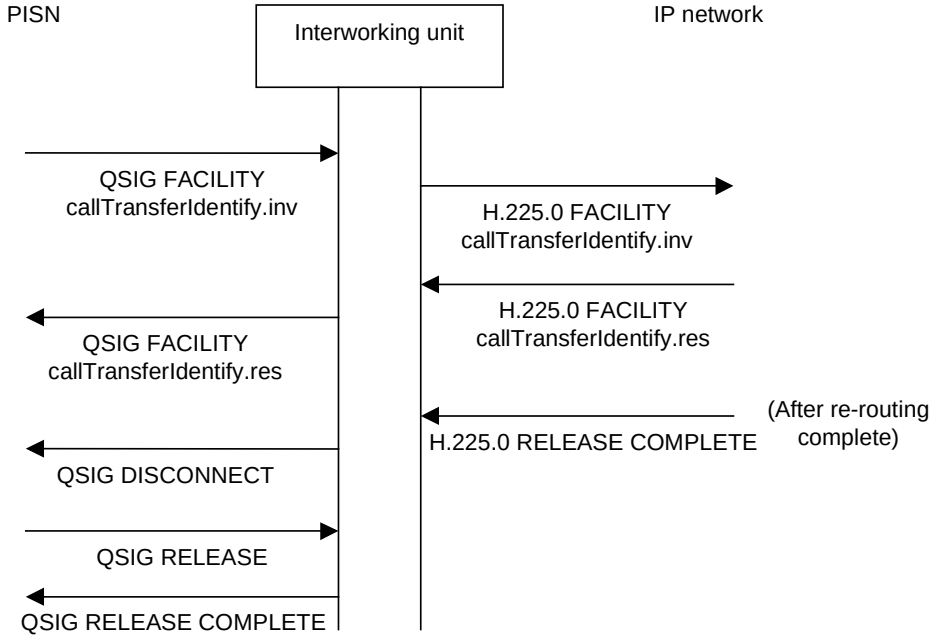

Figure B.3 – Example of scenario AC1

© ISO/IEC 2001 – All rights reserved

Copyright International Organization for Standardization
Provided by IHS under license with ISO
No reproduction or networking permitted without license from IHS
Not for Resale

B.4 Scenario AC2

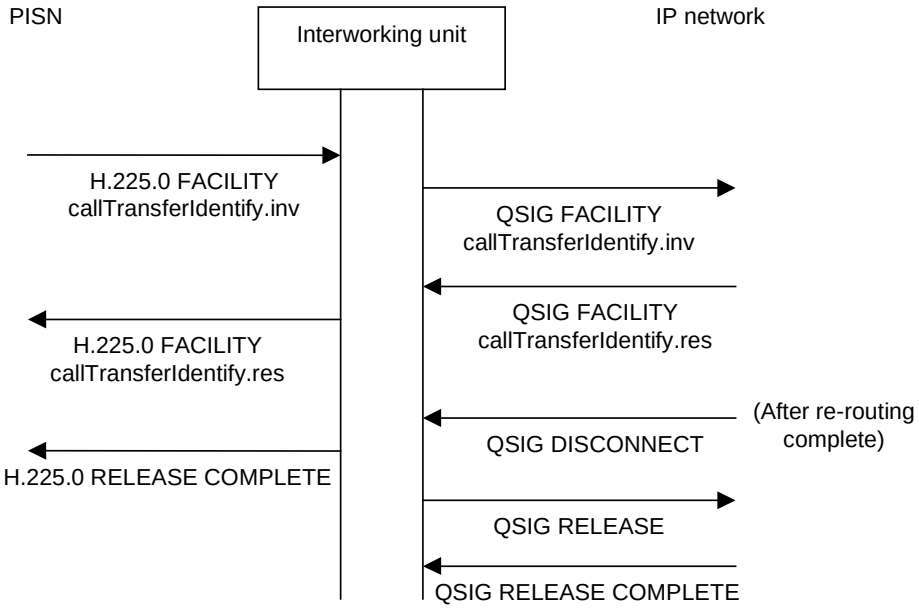

Figure B.4 – Example of scenario AC2

B.5 Scenario BC1 or BC*1

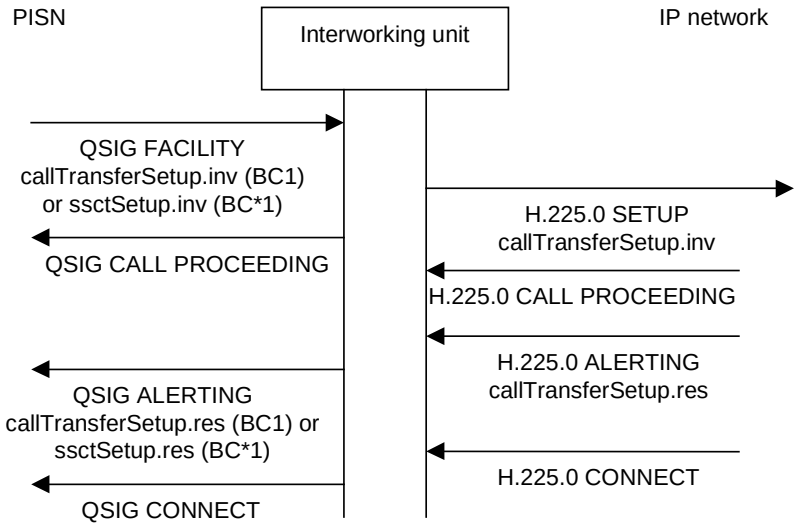

Figure B.5 – Example of scenario BC1 or BC*1

--`,,```,,,,````-`-`,,`,,`,`,,`---
© ISO/IEC 2001 – All rights reserved
Copyright International Organization for Standardization
Provided by IHS under license with ISO
No reproduction or networking permitted without license from IHS
Not for Resale

B.6 Scenario BC2 or BC*2

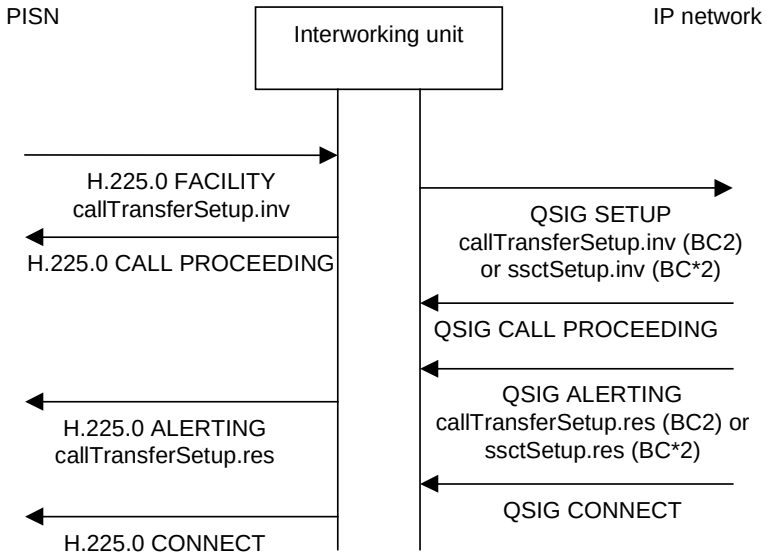

Figure B.6 – Example of scenario BC2 or BC*2

B.7 Scenario B1, C1, B*1 or C*1

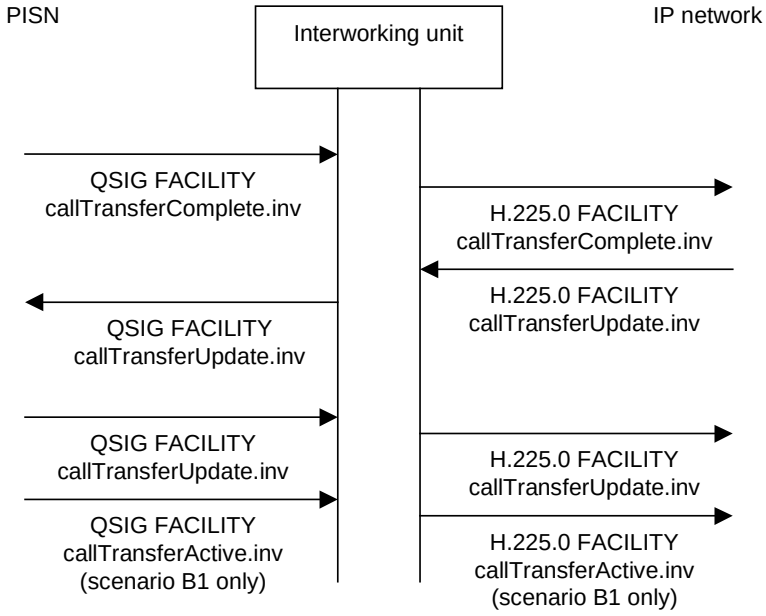

Figure B.7 – Example of scenario B1, C1, B*1 or C*1

© ISO/IEC 2001 – All rights reserved

Copyright International Organization for Standardization
Provided by IHS under license with ISO
No reproduction or networking permitted without license from IHS
Not for Resale

B.8 Scenario B2, C2, B*2 or C*2

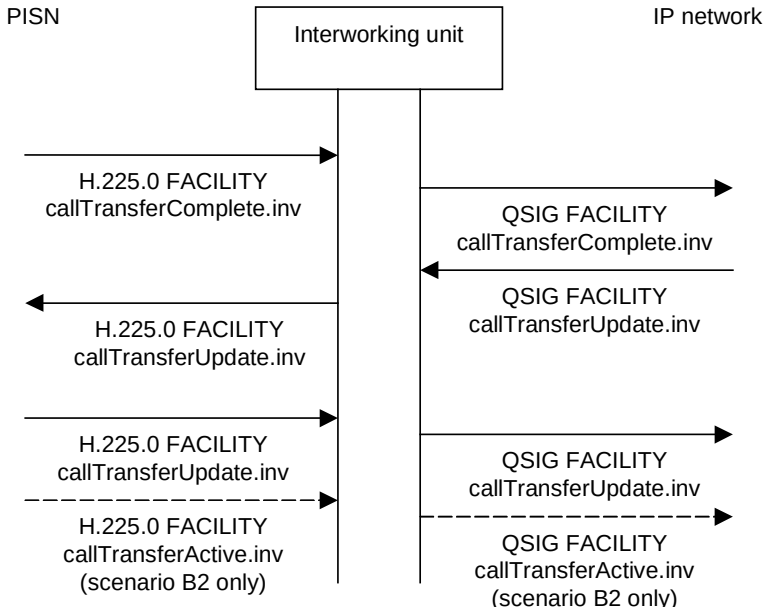

Figure B.8 – Example of scenario B2, C2, B*2 or C*2

© ISO/IEC 2001 – All rights reserved

Copyright International Organization for Standardization
Provided by IHS under license with ISO
No reproduction or networking permitted without license from IHS
Not for Resale

ICS 33.040.35

Price based on 50 pages

© ISO/IEC 2001 – All rights reserved

Copyright International Organization for Standardization
Provided by IHS under license with ISO
No reproduction or networking permitted without license from IHS

Not for Resale