INTERNATIONAL STANDARD

ISO/IEC 21407

First edition
2001-08-15

Information technology — Telecommunications and information exchange between systems — Private Integrated Services Network — Specification, functional model and information flows — Simple dialog supplementary service

Technologies de l'information — Télécommunications et échange d'information entre systèmes — Réseaux privés à intégration de services — Spécifications, modèle fonctionnel et flux d'informations — Service supplémentaire de dialogue simple

Reference number
ISO/IEC 21407:2001(E)

© ISO/IEC 2001

Copyright International Organization for Standardization
Provided by IHS under license with ISO
No reproduction or networking permitted without license from IHS

Not for Resale

PDF disclaimer

This PDF file may contain embedded typefaces. In accordance with Adobe's licensing policy, this file may be printed or viewed but shall not be edited unless the typefaces which are embedded are licensed to and installed on the computer performing the editing. In downloading this file, parties accept therein the responsibility of not infringing Adobe's licensing policy. The ISO Central Secretariat accepts no liability in this area.

Adobe is a trademark of Adobe Systems Incorporated.

Details of the software products used to create this PDF file can be found in the General Info relative to the file; the PDF-creation parameters were optimized for printing. Every care has been taken to ensure that the file is suitable for use by ISO member bodies. In the unlikely event that a problem relating to it is found, please inform the Central Secretariat at the address given below.

© ISO/IEC 2001

All rights reserved. Unless otherwise specified, no part of this publication may be reproduced or utilized in any form or by any means, electronic or mechanical, including photocopying and microfilm, without permission in writing from either ISO at the address below or ISO's member body in the country of the requester.

ISO copyright office
Case postale 56 • CH-1211 Geneva 20
Tel. + 41 22 749 01 11
Fax + 41 22 749 09 47
E-mail copyright@iso.ch
Web www.iso.ch

Printed in Switzerland

Copyright International Organization for Standardization
Provided by IHS under license with ISO
No reproduction or networking permitted without license from IHS

© ISO/IEC 2001 – All rights reserved

Not for Resale

Contents

Foreword		**v**
Introduction		**vi**
1	Scope	**1**
2	Conformance	**1**
3	Normative references	**1**
4	Definitions	**1**
4.1	External definitions	**1**
4.2	Other definitions	**2**
4.2.1	Client User	**2**
4.2.2	Display information	**2**
4.2.3	Keypad information	**2**
4.2.4	Server User	**2**
5	List of acronyms	**2**
6	SS-SD stage 1 specification	**2**
6.1	Description	**2**
6.1.1	General description	**2**
6.1.2	Qualifications on applicability to telecommunication services	**2**
6.2	Procedures	**2**
6.2.1	Provision / withdrawal	**2**
6.2.2	Normal procedures	**3**
6.2.3	Exceptional procedures	**3**
6.3	Interactions with other Supplementary Services / Additional Network Features	**3**
6.3.1	Calling Line Identification Presentation (SS-CLIP)	**3**
6.3.2	Connected Line Identification Presentation (SS-COLP)	**3**
6.3.3	Calling/Connected Line Identification Restriction (SS-CLIR)	**3**
6.3.4	Calling Name Identification Presentation (SS-CNIP)	**3**
6.3.5	Calling Name Identification Presentation (SS-CNIR)	**3**
6.3.6	Connected Name Identification Presentation (SS-CONP)	**3**
6.3.7	Completion of Call to Busy Subscriber (SS-CCBS)	**3**
6.3.8	Completion of Call on No Reply (SS-CCNR)	**4**
6.3.9	Call Transfer (SS-CT)	**4**
6.3.10	Call Forwarding Unconditional (SS-CFU)	**4**
6.3.11	Call Forwarding Busy (SS-CFB)	**4**
6.3.12	Call Forwarding No Reply (SS-CFNR)	**4**
6.3.13	Call Deflection (SS-CD)	**4**
6.3.14	Path Replacement (ANF-PR)	**4**
6.3.15	Call Offer (SS-CO)	**4**
6.3.16	Call Intrusion (SS-CI)	**4**
6.3.17	Do not Disturb (SS-DND)	**4**
6.3.18	Do not Disturb Override (SS-DNDO)	**4**
6.3.19	Advice of Charge (SS-AOC)	**4**
6.3.20	Recall (SS-RE)	**4**
6.3.21	Call Interception (ANF-CINT)	**4**
6.3.22	Transit Counter (ANF-TC)	**4**
6.3.23	Route Restriction Class (ANF-RRC)	**4**

© ISO/IEC 2001 – All rights reserved

--`,,```,,,,````-`-`,,`,,`,`,,`---
Copyright International Organization for Standardization
Provided by IHS under license with ISO
No reproduction or networking permitted without license from IHS
Not for Resale

6.3.24 Message Waiting Indication (SS-MWI) **4**
6.3.25 Wireless Terminal Location Registration (SS-WTLR) **4**
6.3.26 Wireless Terminal Incoming Call (ANF-WTMI) **4**
6.3.27 Wireless Terminal Outgoing Call (ANF-WTMO) **4**
6.3.28 Wireless Terminal Authentication of a CTM User (SS-WTAT) **4**
6.3.29 Wireless Terminal Authentication of the PISN (SS-WTAN) **5**
6.3.30 Private User Mobility Incoming Call (ANF-PUMI) **5**
6.3.31 Private User Mobility Outgoing Call (ANF-PUMO) **5**
6.3.32 Private User Mobility Registration (SS-PUMR) **5**
6.3.33 Common Information (ANF-CMN) **5**
6.3.34 Call Priority Interruption (Protection) (SS-CPI(P)) **5**
6.3.35 Single Step Call Transfer (SS-SSCT) **5**

6.4 Interworking considerations **5**
6.5 Overall SDL **5**

7 SS-SD stage 2 specification **7**
7.1 Functional model **7**

7.1.1 Functional model description **7**
7.1.2 Description of Functional Entities **7**
7.1.3 Relationship of functional model to Basic Call functional model **8**

7.2 Information flows **8**

7.2.1 Definition of information flows **8**
7.2.2 Relationship of information flows to Basic Call information flows **10**
7.2.3 Examples of information flow sequences **10**

7.3 Functional Entity actions **11**

7.3.1 Functional Entity actions of FE1 **11**
7.3.2 Functional Entity actions of FE2 **11**
7.3.3 Functional Entity actions of FE3 **11**
7.3.4 Functional Entity actions of FE4 **11**

7.4 Functional Entity behaviour **11**

7.4.1 Behaviour of FE1 **11**
7.4.2 Behaviour of FE2 **13**
7.4.3 Behaviour of FE3 **14**
7.4.4 Behaviour of FE4 **15**

7.5 Allocation of Functional Entities to physical equipment **16**
7.6 Interworking considerations **16**

 -`,,```,,,,````-`-`,,`,,`,`,,`---

© ISO/IEC 2001 – All rights reserved

Copyright International Organization for Standardization
Provided by IHS under license with ISO
No reproduction or networking permitted without license from IHS

Not for Resale

Foreword

ISO (the International Organization for Standardization) and IEC (the International Electrotechnical Commission) form the specialized system for worldwide standardization. National bodies that are members of ISO or IEC participate in the development of International Standards through technical committees established by the respective organization to deal with particular fields of technical activity. ISO and IEC technical committees collaborate in fields of mutual interest. Other international organizations, governmental and non-governmental, in liaison with ISO and IEC, also take part in the work.

International Standards are drafted in accordance with the rules given in the ISO/IEC Directives, Part 3.

In the field of information technology, ISO and IEC have established a joint technical committee, ISO/IEC JTC 1. Draft International Standards adopted by the joint technical committee are circulated to national bodies for voting. Publication as an International Standard requires approval by at least 75 % of the national bodies casting a vote.

Attention is drawn to the possibility that some of the elements of this International Standard may be the subject of patent rights. ISO and IEC shall not be held responsible for identifying any or all such patent rights.

International Standard ISO/IEC 21407 was prepared by ECMA (as ECMA-310) and was adopted, under a special “fast-track procedure”, by Joint Technical Committee ISO/IEC JTC 1, *Information technology*, in parallel with its approval by national bodies of ISO and IEC.

© ISO/IEC 2001 – All rights reserved

Copyright International Organization for Standardization
Provided by IHS under license with ISO
No reproduction or networking permitted without license from IHS
Not for Resale

Introduction

This International Standard is one of a series of Standards defining services and signalling procedures applicable to Private Integrated Services Networks (PISNs). The series uses ISDN concepts as developed by ITU-T and conforms to the framework of International Standards for Open Systems Interconnection as defined by ISO/IEC.

This International Standard specifies the Simple Dialog (SD) supplementary service.

This International Standard is based upon the practical experience of ECMA member companies and the results of their active and continuous participation in the work of ISO/IEC JTC 1, ITU-T, ETSI and other international and national standardization bodies. It represents a pragmatic and widely based consensus. There is currently no equivalent service specified by ITU-T or ETSI for public ISDN.

© ISO/IEC 2001 – All rights reserved

Copyright International Organization for Standardization
Provided by IHS under license with ISO
No reproduction or networking permitted without license from IHS
Not for Resale

Information technology — Telecommunications and information exchange between systems — Private Integrated Services Network — Specification, functional model and information flows — Simple dialog supplementary service

1 Scope

This International Standard specifies the supplementary service Simple Dialog (SS-SD), which is applicable to various basic services supported by Private Integrated Services Networks (PISNs). Basic services are specified in ISO/IEC 11574.

Supplementary service SD enables a user to communicate with another user or application by the exchange of keypad and display information transparently over a PISN.

Service specifications are produced in three stages, according to the method described in ETS 300 387. This International Standard contains the stage 1 and stage 2 specifications of SS-SD. The stage 1 specification (clause 6) specifies the supplementary service as seen by users of PISNs. The stage 2 specification (clause 7) specifies the functional entities involved in the supplementary service and the information flows between them.

2 Conformance

In order to conform to this International Standard, a stage 3 standard shall specify signalling protocols and equipment behaviour that are capable of being used in a PISN which supports the supplementary service specified in this International Standard. This means that, to claim conformance, a stage 3 standard is required to be adequate for the support of those aspects of clause 6 (stage 1) and clause 7 (stage 2) which are relevant to the interface or equipment to which the stage 3 standard applies.

3 Normative references

The following normative documents contain provisions which, through reference in this text, constitute provisions of this International Standard. For dated references, subsequent amendments to, or revisions of, any of these publications do not apply. However, parties to agreements based on this International Standard are encouraged to investigate the possibility of applying the most recent editions of the normative documents indicated below. For undated references, the latest edition of the normative document referred to applies. Members of ISO and IEC maintain registers of currently valid International Standards.

ISO/IEC 11574:2000, *Information technology - Telecommunications and information exchange between systems - Private Integrated Services Network - Circuit-mode 64 kbit/s bearer services - Service description, functional capabilities and information flows*

ISO/IEC 11579-1:1994, *Information technology - Telecommunications and information exchange between systems - Private integrated services network - Part 1: Reference configuration for PISN Exchanges (PINX)*

ETS 300 387:1994, *Private Telecommunication Network (PTN); Method for the specification of basic and supplementary services*

ITU-T Rec. I.112:1993, *Vocabulary of terms for ISDNs*

ITU-T Rec. I.210:1993, *Principles of telecommunication services supported by an ISDN and the means to describe them*

ITU-T Rec. Z.100:1999, *Specification and description language (SDL)*

4 Definitions

For the purposes of this International Standard, the following definitions apply:

4.1 External definitions

This International Standard uses the following terms defined in other documents:

— Basic Service (ITU-T Rec. I.210)

— Private Integrated Services Network Exchange (PINX) (ISO/IEC 11579-1)

© ISO/IEC 2001 – All rights reserved
Copyright International Organization for Standardization
Provided by IHS under license with ISO
No reproduction or networking permitted without license from IHS
Not for Resale

— Private Integrated Services Network (PISN) (ISO/IEC 11579-1)

— Service (ITU-T Rec. I.112)

— ignalling (ITU-T Rec. I.112)

— Supplementary Service (ITU-T Rec. I.210)

— User (ISO/IEC 11574)

This International Standard refers to the following basic call Functional Entities (FE) defined in ISO/IEC 11574:

— Call Control (CC)

— Call Control Agent (CCA)

This International Standard refers to the following basic call inter-FE relationship defined in ISO/IEC 11574:

— r1

— r2

— r3

4.2 Other definitions

4.2.1 Client User : A user who is able to receive display information and send keypad information.

4.2.2 Display information : A character string which can be displayed on a Client User's terminal display.

4.2.3 Keypad information : Information representing the Client User's key presses on the terminal keypad.

4.2.4 Server User : A user who is able to send display and receive keypad information. A Server User can be a user as defined in ISO/IEC 11574 but also a Telecommunication Application or a Server which is directly connected to the PISN.

5 List of acronyms

ANF	Additional Network Feature
FE	Functional Entity
ISDN	Integrated Services Digital Network
PINX	Private Integrated Service Network Exchange
PISN	Private Integrated Services Network
SDL	Specification and Description Language
SS	Supplementary Service
SS-SD	Supplementary Service Simple Dialog
TE	Terminal Equipment

6 SS-SD stage 1 specification

6.1 Description

6.1.1 General description

SS-SD enables two users to communicate via the exchange of display and keypad information. The Server User is the user who exclusively sends the display information whereas the user who receives that information and who is able to answer the Server User with keypad information is called the Client User.

SS-SD shall be exclusively used to convey display information and key press events.

6.1.2 Qualifications on applicability to telecommunication services

This supplementary service can be used with a basic telecommunication service or independently of it.

6.2 Procedures

6.2.1 Provision / withdrawal

SS-SD shall be generally available to all PISN users.

Copyright International Organization for Standardization
Provided by IHS under license with ISO
No reproduction or networking permitted without license from IHS
Not for Resale
© ISO/IEC 2001 – All rights reserved

6.2.2 Normal procedures

6.2.2.1 Activation, deactivation and interrogation

Not applicable.

6.2.2.2 Invocation and operation

The supplementary service Simple Dialog (SS-SD) shall be invoked between a Server User and a Client User for the exchange of display messages and key press events. For that purpose an existing call or signalling connection shall be used. If no such connection exists, and no call has to be established, a call independent signalling connection shall be established on request of either user for that purpose. The user who initiated the call independent signalling for this reason is responsible for clearing this connection.

SS-SD is invoked by the Server User upon sending display information to the connected Client User. The sent display information shall be shown on the Client User's display.

SS-SD is invoked by the Client User upon request to send keypad information to a Server User. After that request the Client User can send key press events to the Server User. After an additional request from the Client User, no further key press events shall be conveyed to the Server User. The duration of the session is up to the service.

NOTE 1 - The actions for request which have to be done by a Client User to use SS-SD (e.g. to press a specific button on Client User's TE) is out of the scope of this International Standard.

The role of the Server and Client User is fixed during the lifetime of the communication.

NOTE 2 - Any additional inband signalling (e.g. tones and announcements) is outside the scope of this International Standard.

6.2.3 Exceptional procedures

6.2.3.1 Activation, deactivation and interrogation

Not applicable.

6.2.3.2 Invocation and operation

For the case that the display information cannot be presented to the Client User, the Server User shall be informed by an appropriate indication.

Due to local display management reasons, the information sent from the Server User may not immediately be shown to the Client User upon receipt. This can be the case due to other Supplementary Services / ANFs operations needing display access or Client User activities.

If the Server User rejects the keypad information, the fall back action taken by the Client User shall be the generation and sending of DTMF Tones.

6.3 Interactions with other Supplementary Services / Additional Network Features

Interactions with other supplementary services and ANFs for which PISN standards were available at the time of publication of this International Standard are specified below.

6.3.1 Calling Line Identification Presentation (SS-CLIP)

No interaction.

6.3.2 Connected Line Identification Presentation (SS-COLP)

No interaction.

6.3.3 Calling/Connected Line Identification Restriction (SS-CLIR)

No interaction.

6.3.4 Calling Name Identification Presentation (SS-CNIP)

No interaction.

6.3.5 Calling Name Identification Presentation (SS-CNIR)

No interaction.

6.3.6 Connected Name Identification Presentation (SS-CONP)

No interaction.

6.3.7 Completion of Call to Busy Subscriber (SS-CCBS)

No interaction.

© ISO/IEC 2001 - All rights reserved

Copyright International Organization for Standardization
Provided by IHS under license with ISO
No reproduction or networking permitted without license from IHS
Not for Resale

6.3.8 Completion of Call on No Reply (SS-CCNR)

No interaction.

6.3.9 Call Transfer (SS-CT)

No interaction.

6.3.10 Call Forwarding Unconditional (SS-CFU)

No interaction.

6.3.11 Call Forwarding Busy (SS-CFB)

No interaction.

6.3.12 Call Forwarding No Reply (SS-CFNR)

No interaction.

6.3.13 Call Deflection (SS-CD)

No interaction.

6.3.14 Path Replacement (ANF-PR)

No interaction.

6.3.15 Call Offer (SS-CO)

No interaction.

6.3.16 Call Intrusion (SS-CI)

No interaction.

6.3.17 Do not Disturb (SS-DND)

No interaction.

6.3.18 Do not Disturb Override (SS-DNDO)

No interaction.

6.3.19 Advice of Charge (SS-AOC)

No interaction.

6.3.20 Recall (SS-RE)

No interaction.

6.3.21 Call Interception (ANF-CINT)

No interaction.

6.3.22 Transit Counter (ANF-TC)

No interaction.

6.3.23 Route Restriction Class (ANF-RRC)

No interaction.

6.3.24 Message Waiting Indication (SS-MWI)

No interaction.

6.3.25 Wireless Terminal Location Registration (SS-WTLR)

No interaction.

6.3.26 Wireless Terminal Incoming Call (ANF-WTMI)

No interaction.

6.3.27 Wireless Terminal Outgoing Call (ANF-WTMO)

No interaction.

6.3.28 Wireless Terminal Authentication of a CTM User (SS-WTAT)

No interaction

Copyright International Organization for Standardization
Provided by IHS under license with ISO
No reproduction or networking permitted without license from IHS
Not for Resale
© ISO/IEC 2001 – All rights reserved

6.3.29 Wireless Terminal Authentication of the PISN (SS-WTAN)

No interaction.

6.3.30 Private User Mobility Incoming Call (ANF-PUMI)

No interaction.

6.3.31 Private User Mobility Outgoing Call (ANF-PUMO)

No interaction.

6.3.32 Private User Mobility Registration (SS-PUMR)

No interaction.

6.3.33 Common Information (ANF-CMN)

No interaction.

6.3.34 Call Priority Interruption (Protection) (SS-CPI(P))

No interaction.

6.3.35 Single Step Call Transfer (SS-SSCT)

No interaction.

6.4 Interworking considerations

When interworking with another network which supports an equivalent feature, it may be possible to cooperate with the other network in order to provide SS-SD.

6.5 Overall SDL

Figure 1 contains the dynamic description of SS-SD using the Specification and Description Language (SDL) defined in ITU-T Rec. Z.100 (1993). The SDL process represents the behaviour of the network in providing SS-SD.

Input signals from the left and output signals to the right represent primitives from the Client User to the Server User.

Input signals from the right and output signals to the left represent primitives from the Server User to the Client User.

© ISO/IEC 2001 – All rights reserved
Copyright International Organization for Standardization
Provided by IHS under license with ISO
No reproduction or networking permitted without license from IHS
Not for Resale

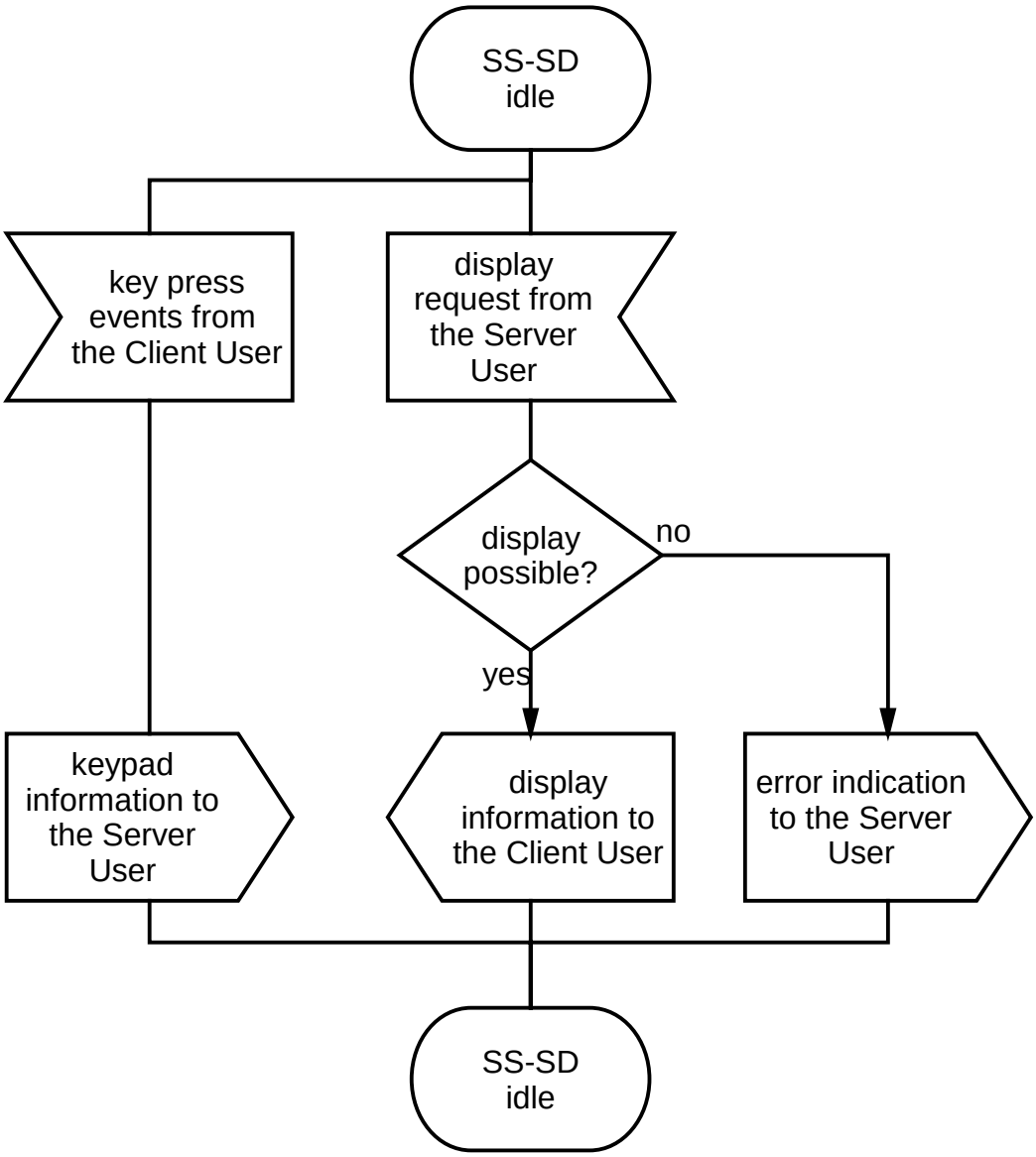

Figure 1 — SS-SD Overall SDL

Copyright International Organization for Standardization
Provided by IHS under license with ISO
No reproduction or networking permitted without license from IHS
Not for Resale
© ISO/IEC 2001 – All rights reserved

7 SS-SD stage 2 specification

7.1 Functional model

7.1.1 Functional model description

The functional model shall comprise the following Functional Entities (FEs):

FE1 Client User agent;

FE2 Client User's control entity;

FE3 Server User's control entity;

FE4 Server User agent.

The following relationships shall exist between these FEs:

ra between FE1 and FE2;

rb between FE2 and FE3;

rc between FE3 and FE4.

Figure 2 shows these FEs and these relationships.

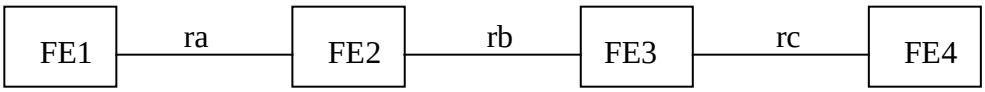

Figure 2 — Functional model for SS-SD

7.1.2 Description of Functional Entities

7.1.2.1 Client User agent, FE1

This Functional Entity:

- sends key press events, caused by the Client User, to FE2;
- receives properly formatted display pattern from FE2 and stimulates the display to the Client User;
- rejects display to FE2 if display pattern cannot be processed.

7.1.2.2 Client User control entity, FE2

This Functional Entity:

- receives display information from FE3;
- formats the received display information in a way suitable for and sends this display pattern to FE1;
- receives key press events from FE1;
- sends keypad information to FE3;
- rejects display to FE3 if display information cannot be processed or was rejected by FE1.

7.1.2.3 Server User control entity, FE3

This Functional Entity:

- receives display information from FE4;
- formats the received display information and sends it to FE2;
- receives keypad information from FE2;
- sends keypad information to FE4;
- sends display reject to FE4 upon receipt of a display reject from FE2.

© ISO/IEC 2001 – All rights reserved
Copyright International Organization for Standardization
Provided by IHS under license with ISO
No reproduction or networking permitted without license from IHS
Not for Resale

7.1.2.4 Server User agent entity, FE4

This Functional Entity:

- sends display information to FE3 on request from the Server User;
- receives keypad information from FE3 and provides them to the Server User;
- provides information to the Server User about failed display upon receipt of a display reject from FE2.

7.1.3 Relationship of functional model to Basic Call functional model

SS-SD can be used in conjunction with a Basic Call or independent of a Basic Call. For the call related case Figure 3 shows an example for the relationship with basic call model.

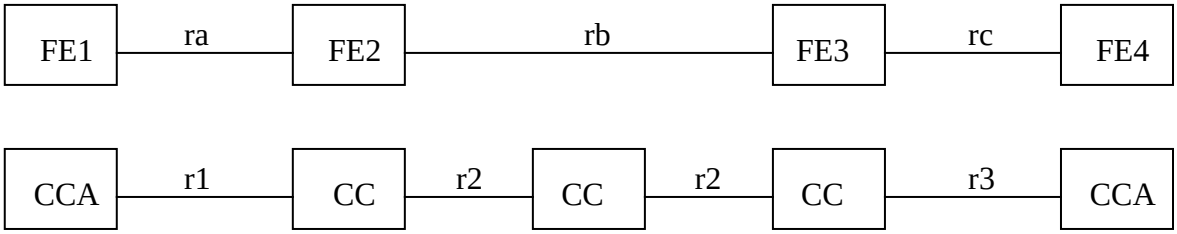

Figure 3 — Example relationship between SS-SD and basic call

7.2 Information flows

7.2.1 Definition of information flows

In the tables listing the elements in information flows, the column headed "Request" indicates which of these elements are mandatory (M) and which are optional (O) in a request/indication information flow.

7.2.1.1 ra_Keypad

ra_Keypad is an unconfirmed information flow across ra from FE1 to FE2 used to carry transparently key press events.

Table 1 lists the elements within the ra_Keypad information flow.

Table 1 — Content of ra_Keypad

Element	Request
Client User key press event	M

7.2.1.2 rb_Keypad

rb_Keypad is an unconfirmed information flow across rb from FE2 to FE3.

Table 2 lists the elements within the rb_Keypad information flow.

Table 2 — Content of rb_Keypad

Element	Request
keypad information	M

--`,,```,,,,````-`-`,,`,,`,`,,`---

Copyright International Organization for Standardization
Provided by IHS under license with ISO
No reproduction or networking permitted without license from IHS

© ISO/IEC 2001 – All rights reserved

Not for Resale

7.2.1.3 rc_Keypad

rc_Keypad is an unconfirmed information flow across rc from FE3 to FE4.

Table 3 lists the elements within the rc_Keypad information flow.

Table 3 — Content of rc_Keypad

Element	Request
keypad information	M

7.2.1.4 ra_Display

ra_Display is an unconfirmed information flow across ra from FE2 to FE1.

Table 4 lists the elements within the ra_Display information flow.

Table 4 — Content of ra_Display

Element	Request
display pattern	M

7.2.1.5 rb_Display

rb_Display is an unconfirmed information flow across rb from FE3 to FE2.

Table 5 lists the elements within the rb_Display information flow.

Table 5 — Content of rb_Display

Element	Request
display information	M

7.2.1.6 rc_Display

rc_Display is an unconfirmed information flow across rc from FE4 to FE3.

Table 6 lists the elements within the rc_Display information flow.

Table 6 — Content of rc_Display

Element	Request
display information	M

7.2.1.7 Display_reject

Display_reject is an unconfirmed information flow sent to FE4 across rc or rb or ra.

Table 7 lists the elements within the Display_reject information flow.

Table 7 — Content of Display_reject

Element	Request
display_reject_reason	M

© ISO/IEC 2001 – All rights reserved
Copyright International Organization for Standardization
Provided by IHS under license with ISO
No reproduction or networking permitted without license from IHS
Not for Resale

7.2.2 Relationship of information flows to Basic Call information flows

ra_Keypad, rb_Keypad, rc_Keypad, ra_Display, rb_Display, rc_Display and Display_reject may be sent together with basic call information flows or independently of them.

7.2.3 Examples of information flow sequences

A stage 3 standard for SS-SD shall provide signalling procedures in support of the information flow sequences specified in the figures. In addition, signalling procedures should be provided to cover other sequences arising from error situations, interactions with Basic Call, interactions with other supplementary services, different topologies, etc.

Within a column representing an SS-SD Functional Entity, the numbers refer to Functional Entity actions listed in 7.3.

7.2.3.1 Normal operation of SS-SD

Figure 4 shows in generic form the information flow sequence for normal operation of SS-SD.

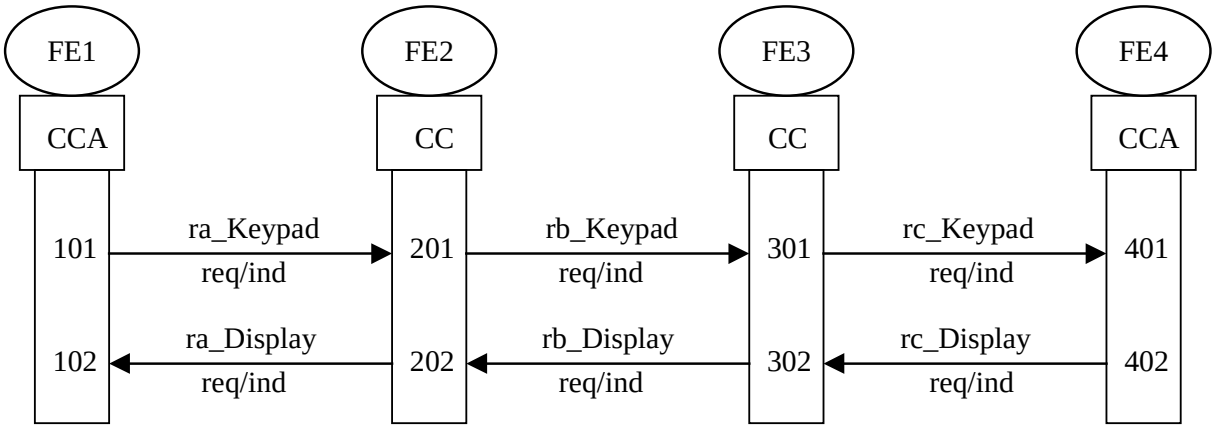

Figure 4 — Information flow sequence for normal operation of SS-SD

7.2.3.1 Exceptional operation of SS-SD

Figure 5 shows in generic form the information flow sequence for exceptional operation of SS-SD.

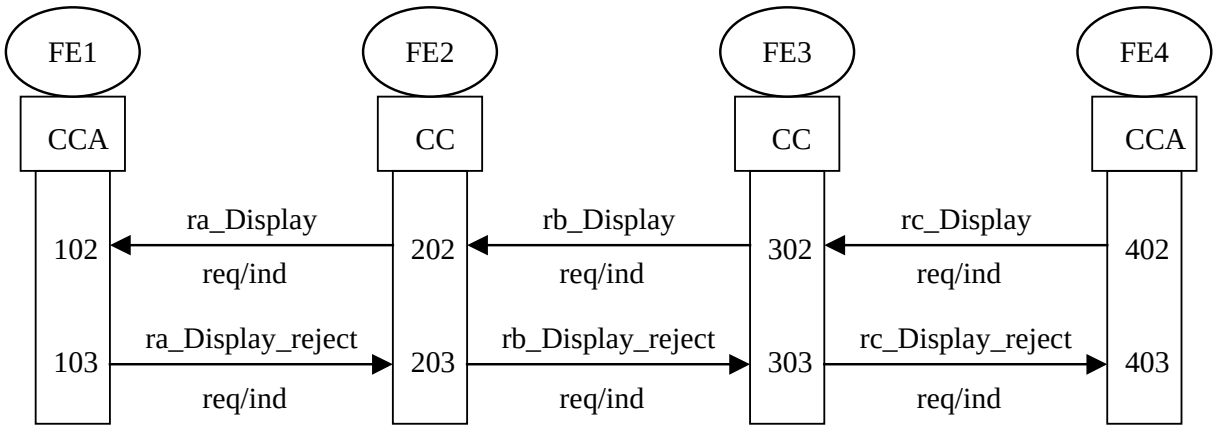

Figure 5 — Information flow sequence for exceptional operation of SS-SD

Copyright International Organization for Standardization
Provided by IHS under license with ISO
No reproduction or networking permitted without license from IHS
Not for Resale
© ISO/IEC 2001 – All rights reserved

7.3 Functional Entity actions

7.3.1 Functional Entity actions of FE1

101 Send ra_Keypad req/ind to FE2 conveying the key press events of the Client User.

102 Receives ra_Display req/ind from FE2 with the display pattern for Client User's display.

103 Recognizes an error and send ra_Display_reject req/ind to FE2.

7.3.2 Functional Entity actions of FE2

201 Receives ra_Keypad req/ind from FE1 and send rb_Keypad req/ind to FE3.

202 Receives rb_Display req/ind from FE3 and send ra_Display req/ind to FE1.

203 Recognizes an error or receives a ra_Display_reject req/ind from FE1 and sends rb_Display_reject req/ind to FE3.

7.3.3 Functional Entity actions of FE3

301 Receives rb_Keypad req/ind from FE2 and send rc_Keypad req/ind to FE4.

302 Receives rc_Display req/ind from FE4 and send rb_Display to FE2.

303 Recognizes an error or receives a rb_Display_reject req/ind from FE2 and send rc_Display_reject req/ind to FE4.

7.3.4 Functional Entity actions of FE4

401 Receives rc_Keypad req / ind from FE3.

402 Sends rc_Display ind / req to FE3.

403 Receives rc_Display_reject req/ind from FE3.

7.4 Functional Entity behaviour

The FE behaviours shown below are intended to illustrate typical FE behaviour in terms of information flows sent and received. The behaviour of each FE is shown using the Specification and Description Language (SDL) defined in ITU-T Rec. Z.100 (1993).

7.4.1 Behaviour of FE1

Figure 6 shows the normal behaviour of FE1. Output signals to the left and input signals from the left represent information flows to and from the Client User. Output signals to the right and input signals from the right represent primitives from and to FE2.

--`,,```,,,,````-`-`,,`,,`,`,,`---

© ISO/IEC 2001 – All rights reserved
Copyright International Organization for Standardization
Provided by IHS under license with ISO
No reproduction or networking permitted without license from IHS
Not for Resale

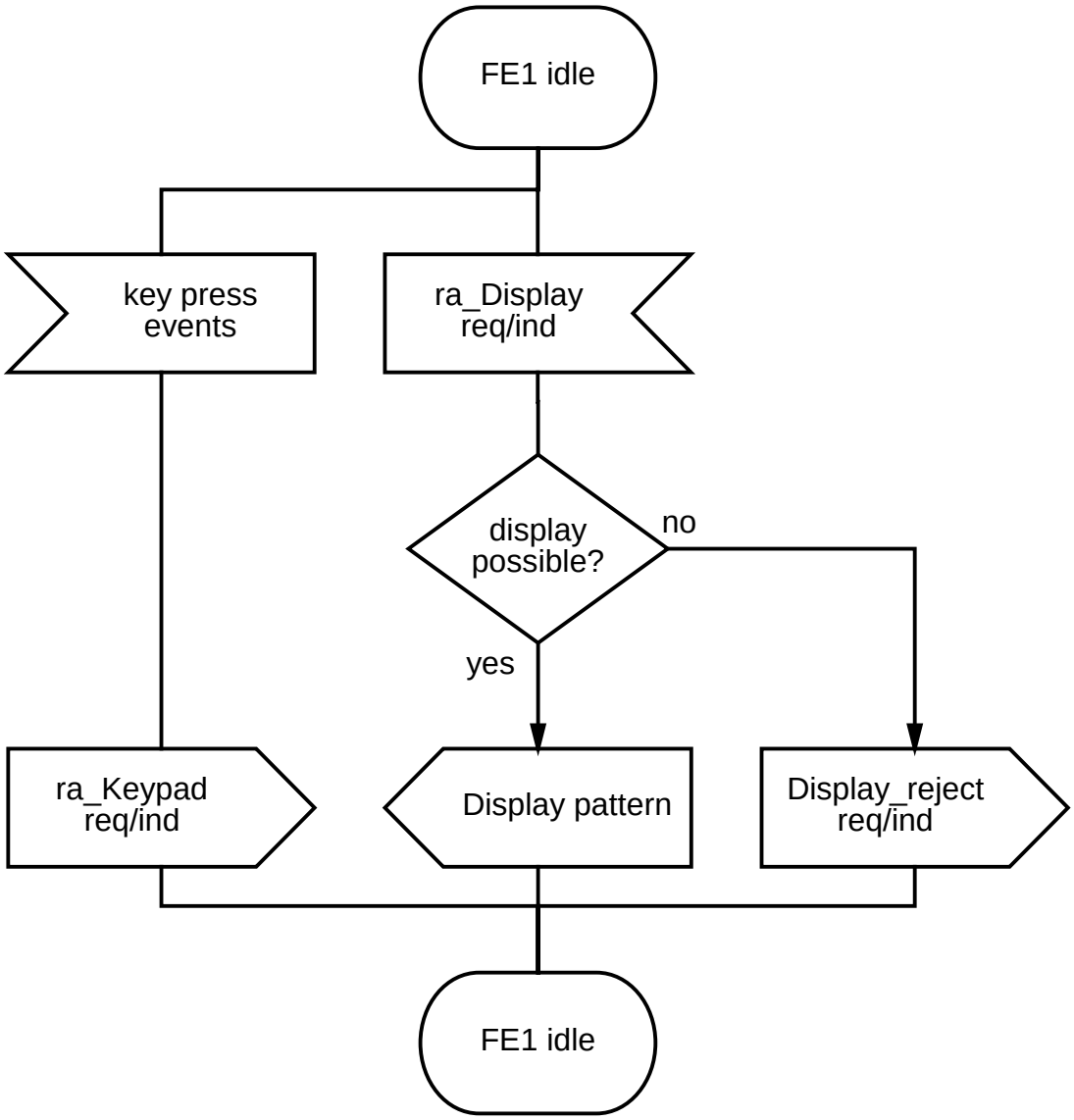

Figure 6 — SS-SD, SDL for Functional Entity FE1

Copyright International Organization for Standardization
Provided by IHS under license with ISO
No reproduction or networking permitted without license from IHS
Not for Resale
© ISO/IEC 2001 – All rights reserved

7.4.2 Behaviour of FE2

Figure 7 shows the normal behaviour of FE2. Output signals to the left and input signals from the left represent information flows to and from the FE1. Output signals to the right and input signals from the right represent information flows from and to FE3.

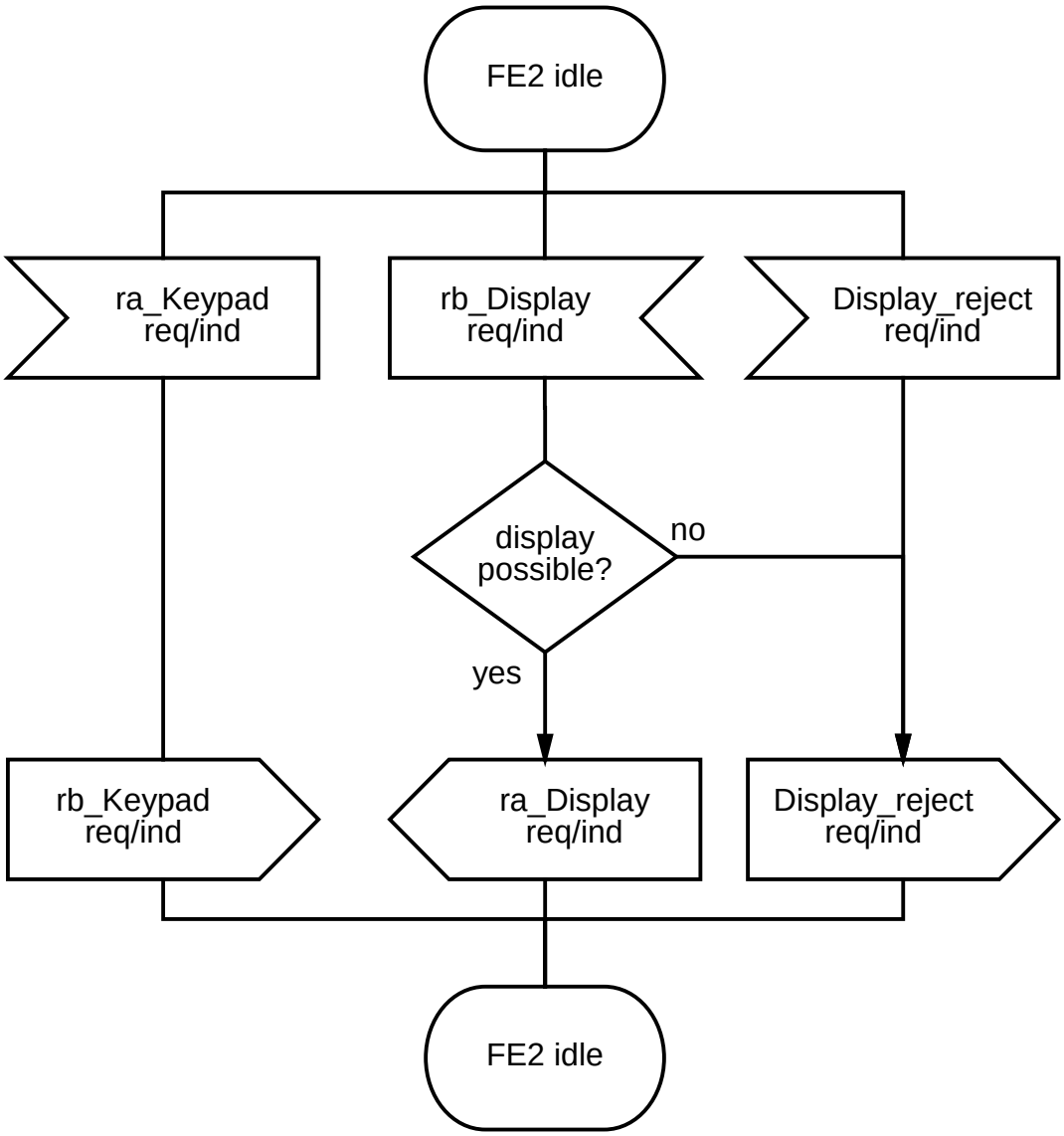

Figure 7 — SS-SD, SDL for Functional Entity FE2

© ISO/IEC 2001 – All rights reserved
Copyright International Organization for Standardization
Provided by IHS under license with ISO
No reproduction or networking permitted without license from IHS
Not for Resale

7.4.3 Behaviour of FE3

Figure 8 shows the normal behaviour of FE3. Output signals to the left and input signals from the left represent information flows to and from the FE2. Output signals to the right and input signals from the right represent primitives from and to FE4.

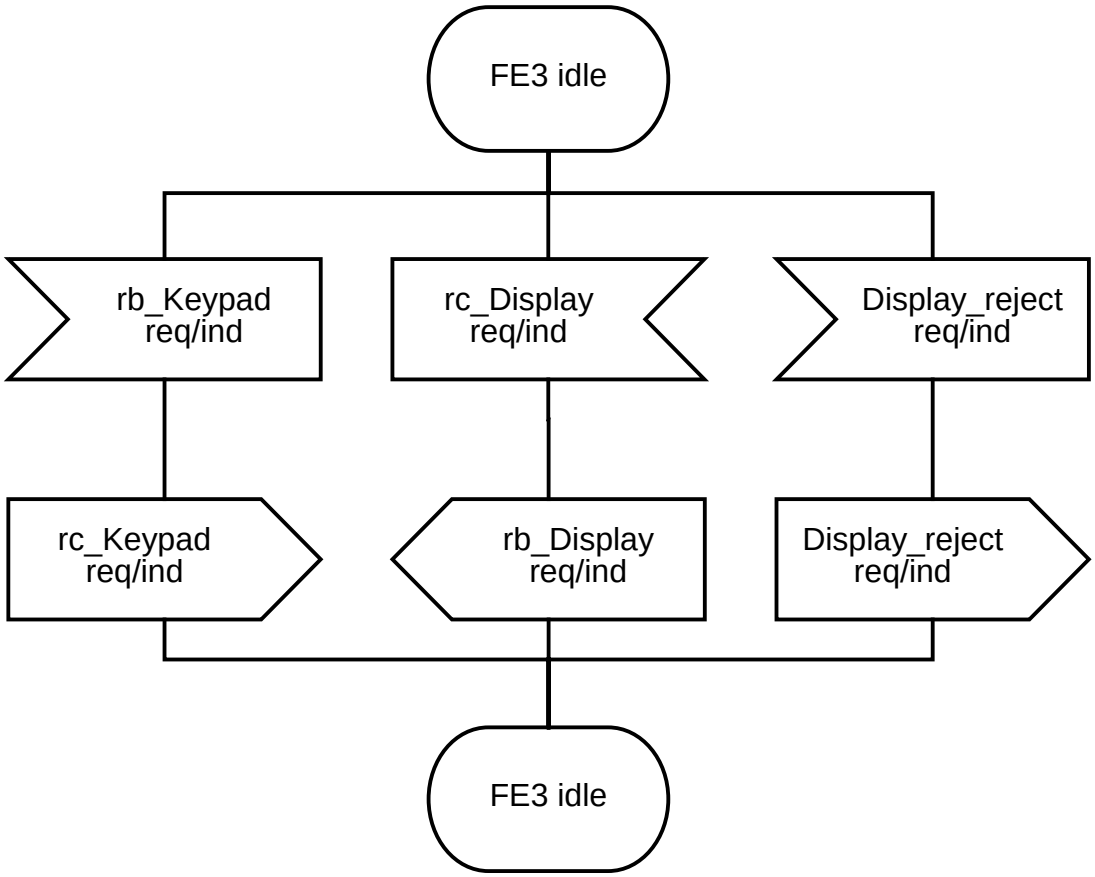

Figure 8 — SS-SD, SDL for Functional Entity FE3

Copyright International Organization for Standardization
Provided by IHS under license with ISO
No reproduction or networking permitted without license from IHS
Not for Resale
© ISO/IEC 2001 – All rights reserved

7.4.4 Behaviour of FE4

Figure 9 shows the normal behaviour of FE4. Output signals to the left and input signals from the left represent information flows to and from the FE3. Output signals to the right and input signals from the right represent primitives from and to the Server User.

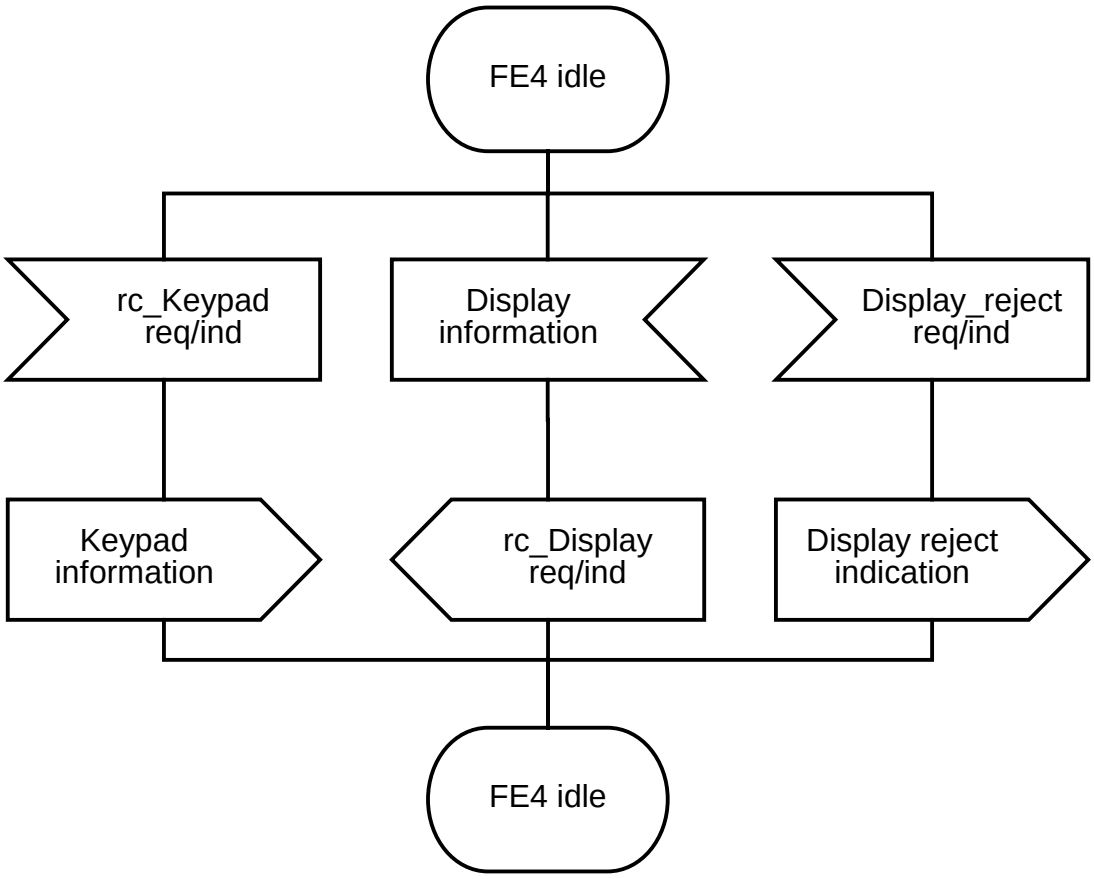

Figure 9 — SS-SD, SDL for Functional Entity FE4

© ISO/IEC 2001 – All rights reserved
Copyright International Organization for Standardization
Provided by IHS under license with ISO
No reproduction or networking permitted without license from IHS
Not for Resale

7.5 Allocation of Functional Entities to physical equipment

The allocation of FEs to physical locations as shown in table 8 shall apply.

Table 8 — Scenarios for the allocation of FEs to physical equipment

	FE1	FE2	FE3	FE4
Scenario 1	Client User's TE	Client User's PINX	Server User's PINX	Server User's TE

7.6 Interworking considerations

The allocation of FEs to physical locations in the case of interworking with other networks that support a compatible service, as shown in table 9, shall apply.

Table 9 — Scenarios for the allocation of FEs to physical equipment in the case of interworking with other networks

	FE1	FE2	FE3	FE4
Scenario 2	Other network	Other network	Server User's PINX	Server User's TE
Scenario 3	Client User's TE	Client User's PINX	Other network	Other network

Copyright International Organization for Standardization
Provided by IHS under license with ISO
No reproduction or networking permitted without license from IHS
Not for Resale
© ISO/IEC 2001 – All rights reserved

ICS 33.040.35

Price based on 16 pages

© ISO/IEC 2001 – All rights reserved

Copyright International Organization for Standardization
Provided by IHS under license with ISO
No reproduction or networking permitted without license from IHS

Not for Resale