INTERNATIONAL STANDARD

ISO/IEC 21118

First edition
2005-08-15

Information to be included in specification sheets — Data projectors

Information à inclure dans les feuilles de spécifications — Projecteurs de données

Reference number
ISO/IEC 21118:2005(E)

© ISO/IEC 2005

Copyright International Organization for Standardization
Reproduced by IHS under license with ISO
No reproduction or networking permitted without license from IHS

Not for Resale

PDF disclaimer

This PDF file may contain embedded typefaces. In accordance with Adobe's licensing policy, this file may be printed or viewed but shall not be edited unless the typefaces which are embedded are licensed to and installed on the computer performing the editing. In downloading this file, parties accept therein the responsibility of not infringing Adobe's licensing policy. The ISO Central Secretariat accepts no liability in this area.

Adobe is a trademark of Adobe Systems Incorporated.

Details of the software products used to create this PDF file can be found in the General Info relative to the file; the PDF-creation parameters were optimized for printing. Every care has been taken to ensure that the file is suitable for use by ISO member bodies. In the unlikely event that a problem relating to it is found, please inform the Central Secretariat at the address given below.

© ISO/IEC 2005

All rights reserved. Unless otherwise specified, no part of this publication may be reproduced or utilized in any form or by any means, electronic or mechanical, including photocopying and microfilm, without permission in writing from either ISO at the address below or ISO's member body in the country of the requester.

ISO copyright office
Case postale 56 • CH-1211 Geneva 20
Tel. + 41 22 749 01 11
Fax + 41 22 749 09 47
E-mail copyright@iso.org
Web www.iso.org

Published in Switzerland

Copyright International Organization for Standardization
Reproduced by IHS under license with ISO
No reproduction or networking permitted without license from IHS

© ISO/IEC 2005 – All rights reserved

Not for Resale

Contents

Page

Foreword iv
1 Scope 1
2 Terms and definitions 1
3 Measuring methods and conditions 2
4 Items in specification sheets 2
Annex A (normative) **Specification sheets** 6
Annex B (informative) **Measuring methods and conditions** 10
Bibliography 15

© ISO/IEC 2005 – All rights reserved

Copyright International Organization for Standardization
Reproduced by IHS under license with ISO
No reproduction or networking permitted without license from IHS
Not for Resale

Foreword

ISO (the International Organization for Standardization) and IEC (the International Electrotechnical Commission) form the specialized system for worldwide standardization. National bodies that are members of ISO or IEC participate in the development of International Standards through technical committees established by the respective organization to deal with particular fields of technical activity. ISO and IEC technical committees collaborate in fields of mutual interest. Other international organizations, governmental and non-governmental, in liaison with ISO and IEC, also take part in the work. In the field of information technology, ISO and IEC have established a joint technical committee, ISO/IEC JTC 1.

International Standards are drafted in accordance with the rules given in the ISO/IEC Directives, Part 2.

The main task of the joint technical committee is to prepare International Standards. Draft International Standards adopted by the joint technical committee are circulated to national bodies for voting. Publication as an International Standard requires approval by at least 75 % of the national bodies casting a vote.

Attention is drawn to the possibility that some of the elements of this document may be the subject of patent rights. ISO and IEC shall not be held responsible for identifying any or all such patent rights.

ISO/IEC 21118 was prepared by Joint Technical Committee ISO/IEC JTC 1, *Information technology*, Subcommittee SC 28, *Office equipment*.

© ISO/IEC 2005 – All rights reserved
Copyright International Organization for Standardization
Reproduced by IHS under license with ISO
No reproduction or networking permitted without license from IHS
Not for Resale

Information to be included in specification sheets — Data projectors

1 Scope

This International Standard is applicable for information to be included in specification sheets about front projection type, fixed resolution and light valve system, and data projectors having a computer signal input port capable of projecting the image outputs from a computer, VCR or other devices.

NOTE 1 It also covers Data projectors that have a video signal input port as well as a computer signal input port.

NOTE 2 It is not applicable to units with a rear projection system or with a video input terminal alone.

2 Terms and definitions

For the purposes of this document, the following terms and definitions apply.

2.1
light valve
a system which creates an optical image by electrical means using light from a separate source

2.2
telephoto end
the maximum focal length position of the zoom lens

2.3
wide-angle end
the minimum focal length position of the zoom lens

2.4
resize
process which converts an input image signal from one resolution and dot number to an image with a different resolution or dot number

2.5
lens shift
a specific function which enables changing the location of the image on the projection screen by moving the lens vertically (up/down) and/or horizontally (left/right) without moving the projector itself

2.6
image position(a measure of the affect of lens shift)
the reference point is defined as the point on the projection screen that is intersected by the physical axis of the projection lens

up image position = (Distance between top edge and reference point)

down image position = (Distance between bottom edge and reference point)

left image position = (Distance between left edge and reference point)

right image position = (Distance between right edge and reference point)

© ISO/IEC 2005 – All rights reserved

Copyright International Organization for Standardization
Reproduced by IHS under license with ISO
No reproduction or networking permitted without license from IHS
Not for Resale

when image position is variable by lens shift feature, maximum and minimum positions should be specified

example specification of image positions for a data projector with lens shift:

up/down 1:10 to 10:1, right /left 1:3 to 3:1

this means that the up image position with maximum lens shift upward is 10 times the up image position with no lens shift

similarly the down image position with maximum lens shift downward is 10 times the down image position with no lens shift

likewise, the right image position with maximum lens shift right is 3 times the right image position with no lens shift

likewise, the left image position with maximum lens shift is 3 times the left image position with no lens shift

note that if there is no lens shift in the horizontal direction right/left 1:1 would be the value given for right/left image position.

2.7
front projection system
a projection system (of a projector) focuses an image onto a screen by projected light. The image from a light-reflecting screen is viewed from the projector side of the screen

2.8
rear projection system
a projection system (of a projector) focuses an image onto a screen by projected light

NOTE The image is viewed from the opposite side of the light transmitting screen.

3 Measuring methods and conditions

Annex B (informative) shows measuring methods and conditions for the performance specification items in Table 1.

4 Items in specification sheets

Item, item specification and specification examples are shown in Table 1. They are fundamental properties, which must be included in the specification sheets.

The lower-limit values of the projector must maintain 80% of the values in specification sheets for the brightness, contrast ratio and light output uniformity.

The specification sheets must have a statement, which says that they are made in accordance with this standard.

They must use the same number as Table 1 exactly.

Items may be omitted if the projector has no function for it. When an item is omitted, numbers of the following items may not be changed.

An example specification sheet is shown in Annex A (normative).

NOTE When items and values are extracted from specification sheets, they can be listed in any order and their number may not be specified.

© ISO/IEC 2005 – All rights reserved
Copyright International Organization for Standardization
Reproduced by IHS under license with ISO
No reproduction or networking permitted without license from IHS
Not for Resale

Table 1 — Performance specification item

No.	Item	Item specification	Specification example
1	Product number, type name, or model number	The product name, type name, model numbers, or product numbers must be entered.	
2	Display system	The light valve type must be indicated.	a) LCD, micro mirror, other b) transmitting, reflecting c) single panel, 3 panel, other
3	Optical system	The optics for colour separation and convergence must be indicated.	a) Dichroic mirror separation-prism convergence system b) Time sharing separation/ convergence system c) other
4	Display device		
4.1	Size of effective display area	Size, number of panels and aspect ratio must be indicated.	1,3" × 3, aspect ratio 4:3
4.2	Number of pixels	The numbers of pixels per sheet, numbers of sheets, and total numbers of pixels must be indicated.	480 000 pixels (800 × 600) × 3 sheets, 1 440 000 pixels in total
4.3	Other	Features of display device must be indicated.	without micro lens
5	Projection lens		
5.1	Zoom	Zoom magnifications must be indicated.	Power zoom (1× to 1,4×)
5.2	Focus	Method of focus adjustment must be indicated.	Manual, or powered
5.3	Lens shift	Image position for maximum and minimum lens shift (if any) must be specified	Up/down 1:10 to 10:1, right /left 1:3 to 3:1 (in case of variable lens shift in both horizontal and vertical directions) Up/down 10:1 right/left 1:1 (in case of no right/left lens shift)
5.4	Focal length (mm) Aperture	Focal length and Aperture must be indicated.	*f* = 52 mm – 73 mm f/2,5 –2,9
6	Light source	The light source lamp type (name), wattage, and quantity must be indicated. Lamp number can be omitted if only one lamp is used.	300 W metal halide lamp
7	Screen size [Projection distance]	The minimum and maximum sizes of the projected image must be indicated. The associated projection distance must also be indicated. Telephoto end is for minimum size and wide-angle end for maximum size must be given for a zoom lens.	Image size 0,4 m × 0,3 m minimum to 2 m × 1,5 m maximum for projection distance 0,8 m minimum to 4 m maximum
8	Number of colours	The maximum number of reproducible colours must be indicated.	Full-colour reproduction (16 700 000 colours)
9	Light output	The light output on a projected screen must be measured and indicated.	Average value of production units must be indicated. 800 lm (see Annex B, B.2.2)
10	Contrast ratio (full white/full black)	The ratio of illuminance between the white and black areas of images must be indicated.	Average value of production units must be indicated. 200:1 (full white/full black) (see Annex B, B.2.3)
11	Light output uniformity	The ratio between the center luminance and 4-peripheral-point average luminance of a full-white image must be indicated.	Average value of production units must be indicated. 85 % (see Annex B, B.2.4)

© ISO/IEC 2005 – All rights reserved

Copyright International Organization for Standardization
Reproduced by IHS under license with ISO
No reproduction or networking permitted without license from IHS
Not for Resale

Table 1 (*continued*)

No.	Item	Item specification	Specification example
12	Audio output	The output power must be indicated. Either stereo or monaural must be indicated as well.	10 W + 10 W stereo (see Annex B, B.3)
13	Speaker	The diameter and quantity must be indicated.	∅5 cm × 2
14	Displayable scanning frequency		
14.1	Horizontal	The range of displayable horizontal frequencies must be indicated.	15 kHz to 100 kHz
14.2	Vertical	The range of displayable vertical frequencies must be indicated.	50 Hz to 120 Hz
15	Display resolution		
15.1	For computer signal input	The maximum display resolution for computer input must be indicated. Notational convention method must be indicated as well. When display resolution is beyond the panel native resolution, it also must be indicated. The displayable video signal type (system) and resolution must be indicated. If there are two or more signal types (systems), all of them may be specified.	Maximum display resolution 1024 dots × 768 dots (resizing) Panel display resolution 800 dots × 600 dots
15.2	For video signal input	If there are two or more signal types (systems), all of them may be specified.	NTSC: 550 TV lines, (S-video input) PAL/SECAM: 350 TV lines (see Annex B, B.4)
16	Computer signal input/output	The signal type, connector type and number of connectors must be indicated. Any order of entries and contents are acceptable. If the terminal has several functions, this may be entered as a remark.	RGB input: 2 lines RGB output: 1 line RGB input port (mini-D-sub 15-pin) RGB output port (mini-D-sub 15-pin) Audio input port (RCA pin L/R)
17	Video signal input/output	The signal type, connector type, and number of connectors must be indicated. Any order of entries and contents are acceptable. If the terminal has several functions, this may be entered as a remark.	Video/S-video input: 1 line Video input port (RCA pin) S-video port (mini-DIN 4-pin) Audio input port (RCA pin L/R)
18	Control signal input/output	The control signal input/output port and other relevant descriptions must be given. Any order of entries and contents are acceptable.	RS-232C and mouse input ports
19	Acoustic Noise	If the noise values other than the maximum value is entered, its working condition must be indicated.	Noise measurements must be made by ISO 9296 [1]. 35dB(A weighted) At eco mode, 30dB(A weighted) (see Annex B, B.5.2)
20	Operating temperature (operating humidity)	The temperatures (relative humidity) at which the product normally operates must be indicated. The humidity need not always be indicated.	5 °C to 35 °C (20 % to 70 %)
21	Power requirements	The rated voltage and frequency must be indicated.	AC100V, 50/60Hz
22	Power consumption	The maximum power consumption must be indicated in watts. Information about standby and power-saving modes can optionally be entered.	380 W (see Annex B, B.6)

Copyright International Organization for Standardization
Reproduced by IHS under license with ISO
No reproduction or networking permitted without license from IHS
Not for Resale
© ISO/IEC 2005 – All rights reserved

Table 1 (*continued*)

No.	Item	Item specification	Specification example
23	Outside dimensions	The outside dimensions (width, height, and depth) of the product must be indicated in millimeters. The width, height, and depth may be indicated in any order. If there are any exceptions, they must be specified within parentheses.	W 300 mm × H 150 mm × D 400 mm (without protrusions)
24	Weight	The weight of the product must be indicated in kilograms. If there are any exceptions, they must be specified within parentheses.	15 kg (detachable remote controller included)
25	Accessories	The names and quantities of the accessories supplied together with the product must be indicated.	Remote controller, lens cap, RGB cable, mouse cable, power cable, and instruction manual
26	Other functions	Features and special functions other than those indicated from 1 to 25 must be indicated.	

© ISO/IEC 2005 – All rights reserved

Copyright International Organization for Standardization
Reproduced by IHS under license with ISO
No reproduction or networking permitted without license from IHS
Not for Resale

Annex A
(normative)

Specification sheets

Annex A provides for information to be included in specification sheets.

This specification sheets are made according to ISO 21118.

1 Product number, type name, or model number

Product number: _____ Type name: _____

2 Display system

a) ☐ Liquid crystal ☐ Micro-mirror ☐ Other ( )

b) ☐ Transparent ☐ Reflective

c) ☐ Single display element ☐ Three display elements ☐ Other ( )

3 Optical system

a) ☐ Dichroic mirror separation/ prism convergence

b) ☐ Colour wheel

c) ☐ Other ( )

4 Display device

a) Size: _____ type Aspect ratio: _____: _____

b) Number of pixels: _____ pixels (_____ × _____) × __ sheets

Total number of pixels: _____ pixels

c) Other additional items: _____

_____

5 Projection lens

a) Zoom ☐ Motor ☐ Manual Zoom ratio _____ : 1

b) Focus ☐ Motor ☐ Manual

c) Lens shift ☐ Fixed shift amount _____

☐ Variable shift amount (up/down) _____

☐ Motor ☐ Manual

shift amount (left/right) _____

☐ Motor ☐ Manual

d) Focal length f= ___ mm - ___ mm

e) Aperture f/ ___ - ___

Copyright International Organization for Standardization
Reproduced by IHS under license with ISO
No reproduction or networking permitted without license from IHS
Not for Resale
© ISO/IEC 2005 – All rights reserved

6 Light source

a) Lamp type/name _____

b) Lamp power _____W

c) Number of lamps _____piece(s)

7 Screen size

a) Minimum screen size _____ type Throw distance _____ m

b) Maximum screen size _____ type Throw distance _____ m

Specification sheets

8 Number of colours _____

9 Light output _____1m

10 Contrast ratio _____(full white/full black)

11 Light output uniformity _____%

12 Audio output ☐ Monaural ☐ Stereo ☐ Other ( )

Output _____W + _____W

13 Speaker Diameter _____cm

Number of speaker _____piece

14 Displayable scanning frequency

Horizontal _____kHz to _____kHz

Vertical _____Hz to _____Hz

15 Display resolution

15-1 Computer signal input

Maximum input resolution _____dot X _____dot

Convention method

Panel native resolution _____dot X _____dot

15-2 Video signal input

Displayable signal ☐ NTSC ☐ PAL ☐ SECAM ☐ Other (1080i, 720p, 480p)

☐ PAL-M ☐ PAL-N ☐ M-NTSC

Resolution _____ TV lines ☐ NTSC ☐ PAL ☐ SECAM ☐ Other ( )

☐ Composite input ☐ S input ☐ Other ( )

--`,,```,-`-`,,`,,`,`,,`---

© ISO/IEC 2005 – All rights reserved

Copyright International Organization for Standardization
Reproduced by IHS under license with ISO
No reproduction or networking permitted without license from IHS

Not for Resale

16 Computer signal input/output

	Signal type	Connector type	Number of connectors	Remark
Computer signal input	_____	_____	_____	_____
	_____	_____	_____	_____
	_____	_____	_____	_____
	Audio input	_____	_____	_____
Computer signal output	_____	_____	_____	_____
	_____	_____	_____	_____
	_____	_____	_____	_____
	Audio output	_____	_____	_____

Specification sheets

17 Video signal input/output

	Signal type	Connector type	Number of connectors	Remark
Video signal input	_____	_____	_____	_____
	_____	_____	_____	_____
	_____	_____	_____	_____
	Audio input	_____	_____	_____
Video signal output	_____	_____	_____	_____
	_____	_____	_____	_____
	_____	_____	_____	_____
	Audio output	_____	_____	_____

18 Control signal input/output

_____

_____

19 Acoustic Noise

Noise level _____ dB (A-characteristics)

_____ dB (A-characteristics) (Operation status _____)

20 Operating temperature (Operating humidity)

Operating temperature range _____°C to _____°C (Operating humidity range ___ % to _____ %)

21 Power requirement

AC _____ V, __/__ Hz

Copyright International Organization for Standardization
Reproduced by IHS under license with ISO
No reproduction or networking permitted without license from IHS
Not for Resale
© ISO/IEC 2005 – All rights reserved

22 Power consumption

Maximum power consumption _____ W (in rated input voltage)

Standby _____ W

23 Outside dimensions

W _____ mm × H _____ mm × D _____ mm ( )

24 Weight

_____ kg ( )

25 Accessories

_____

_____

26 Other functions

_____

© ISO/IEC 2005 – All rights reserved
Copyright International Organization for Standardization
Reproduced by IHS under license with ISO
No reproduction or networking permitted without license from IHS
Not for Resale

Annex B
(informative)

Measuring methods and conditions

B.0 Introduction

This Annex shows Measuring Methods and Conditions for the items in the specification sheets that are not a part of the regulations. All of experiments and measurements must be made under the following conditions unless otherwise specified.

B.1 Ambient conditions

— Temperature: 18 °C to 28 °C

— Relative humidity: not specified

— Input voltage: the rated voltage

— Frequency of input voltage: the rated frequency

— Environmental light: It is recommended that the brightness of the measurement room be not higher than 5 lx.

The measured value must be corrected by subtracting the environmental light value.

— Barometric pressure: 86 kPa to 106 kPa

In cases where there is only one rated input voltage available, variation of the input voltage must not exceed ± 5 % of the rated voltage. If the rated voltage is allowed to vary within a certain range, the central value in the range must be used as the input power voltage, and the voltage variation must not exceed ± 5 % of the input voltage. If the central value is not used as the input voltage, the voltage used for measurements must be recorded.

B.2 Brightness, contrast ratio, and light output uniformity measuring procedures and measuring conditions

B.2.1 Projector adjustment and other conditions

B.2.1.1 Lens setup

Zoom must be set at the wide-angle end if optical zoom function exists. Focus adjustments must be made using appropriate patterns generated from an internal or external pattern generator until the sharpest patterns are produced over the whole projection image area. The image position for this test is not specified but the image position used should be given in the record.

B.2.1.2 Brightness, contrast and colour temperature

Brightness (black level) and contrast (video gain) adjustments must be made in such a manner that all the eight greyscale steps of the greyscale test pattern specified by IEC 61947-1:2002[2] are visible as shown in

© ISO/IEC 2005 – All rights reserved
Copyright International Organization for Standardization
Reproduced by IHS under license with ISO
No reproduction or networking permitted without license from IHS
Not for Resale

Figure B.1. The colour temperature is not stipulated in this document; however, the colour temperature employed for measurements must be recorded as CIE (u',v') values.

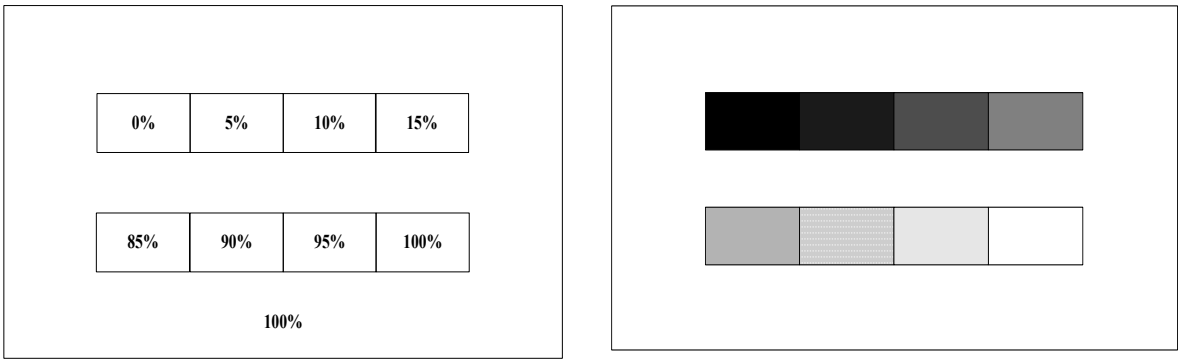

Figure B.1 — Greyscale test pattern

B.2.1.3 Effective pixels area

Regardless of the projected image area, the measurement must always be conducted by using full screen (use all of the effective pixels) image.

B.2.1.4 Measurement signals

RGB output signals from a personal computer must be used for measurements. A 100 % full-white pattern and a 0 % full-black pattern must be used. The analog signal level of the 100 % full-white pattern must be 0,7 V $\pm$ 1 % when terminated with a terminating resistance of 75 Ω ($\pm$ 1 %) at the signal source output.

B.2.1.5 Measuring procedure

Measurements must be made using a 1,02 m to 1,78 m white screen that is free of optical keystone distortion.

B.2.1.6 Light meter

A spectral luminous efficiency corrected, cosine-corrected light meter must be positioned in parallel with the screen and used for making measurements.

B.2.1.7 Other

To assure the use of virgin lamps, projectors must be measured immediately after production. Projectors must be operated until their brightness stabilizes, and then promptly measured.

In cases where there are two or more personal computer RGB inputs available, whichever of them provides the better or best measurement must be selected.

B.2.2 Brightness measuring procedure

The illuminance meter must be placed on the focal plane to measure the illuminance. As shown in Figure B.2, screen illuminance level measurements must be taken at 9 points (each in the center of one of the nine zones) in a 100% full-white pattern image. The measurement field shall be at least 3 pixels by 3 pixels. The average of the nine readings in lux (lumens per square metre) shall be multiplied by the number of square metres covered by the image at the plane of the meter readings.

© ISO/IEC 2005 – All rights reserved

Copyright International Organization for Standardization
Reproduced by IHS under license with ISO
No reproduction or networking permitted without license from IHS
Not for Resale

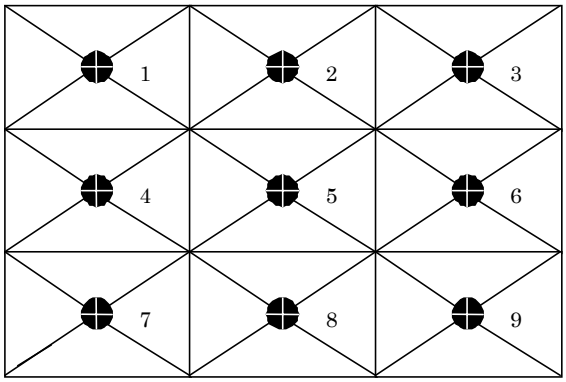

Figure B.2 — 9 point measuring grid

B.2.3 Contrast ratio measuring procedure

The illuminance meter must be placed on the focal plane to measure the illuminance. As shown in Figure B.2, screen illuminance level measurements must be taken at 9 points in a 100 % full-white pattern image. Further, screen illuminance level measurements must be taken at 9 points in a 0 % full-black pattern image, as indicated in Figure B.2. The measurement field shall be at least 3 pixels by 3 pixels. The contrast ratio must be expressed as the ratio of the average of 9-point full-white pattern measurements (in lux) to the average of 9-point full-black pattern measurements (in lux).

B.2.4 Light output uniformity measuring procedure

An illuminance meter must be positioned in the focal plane to measure the illuminance. As shown in Figure B.2.2, screen illuminance level measurements must be taken at the center of each of the five zones: 1, 3, 5, 7, and 9 within a 100 % full white pattern image. The measurement field shall be at least 3 pixels by 3 pixels. The measurements (in lux) taken at the centers of four zones, 1, 3, 7, and 9, must be averaged. The deviation of the resultant average value from the measurement (in lux) made at the center of zone 5 must be expressed as a percentage, which indicates the light output uniformity.

B.3 Measuring methods and conditions for audio output

The rating output power specified in the Clause 3 (Audio output power) of IEC 60107-2 [3] must be employed.

B.4 Measuring methods and conditions for display resolution at video signal input

The measuring method specified in 7.1.9 (resolution measuring method) of IEC 60107-1[4] must be employed.

B.5 Measuring methods and conditions for acoustic noise

B.5.1 Environment condition for acoustic noise measurement

B.5.1.1 Measuring space and measuring condition

The measurement must be made at measuring space and conditions shown in 7 (Method for determining sound power levels of equipment under essentially free-field conditions over a reflecting plane) of ISO 7779[5].

© ISO/IEC 2005 – All rights reserved
Copyright International Organization for Standardization
Reproduced by IHS under license with ISO
No reproduction or networking permitted without license from IHS
Not for Resale

B.5.1.2 Background acoustic noise

The level of background acoustic noise must meet the requirement in 6.7.3 (Corrections for background acoustic noise) of ISO 7779[5].

B.5.2 Measuring methods and conditions for acoustic noise

B.5.2.1 Projector adjustment and other conditions for acoustic noise measurements

a) Warm-up time

Prior to measurements, the projector must be operated for a period of time sufficient to allow its temperature to stabilize. If the time required for stabilization is unknown, the projector must be operated for 30 minutes or longer.

b) Measuring instruments

Measuring instruments specified in 6.4 (Instrumentation) of ISO7779[5] must be employed.

B.5.2.2 Acoustic noise measuring procedure

Measurement positions must be 1 m ± 0,03 m apart horizontally from the centers of the front, rear, left, and right side of the projector and 1,5 m ± 0,03 m above the floor. The microphone must be positioned 30° below horizontal. The projector must be placed at the center of a measuring table that complies with the requirements stated in ISO 7779[5] Annex A (see Figure B.3). Measurements must be taken at four places (front, rear, left, and right). A-weighted sound pressure level measurements must be made in both the idling and operating modes. If two or more operating modes exist, the measurements made in all such modes must be recorded. While measurements are being made, no operation must be performed on the equipment.

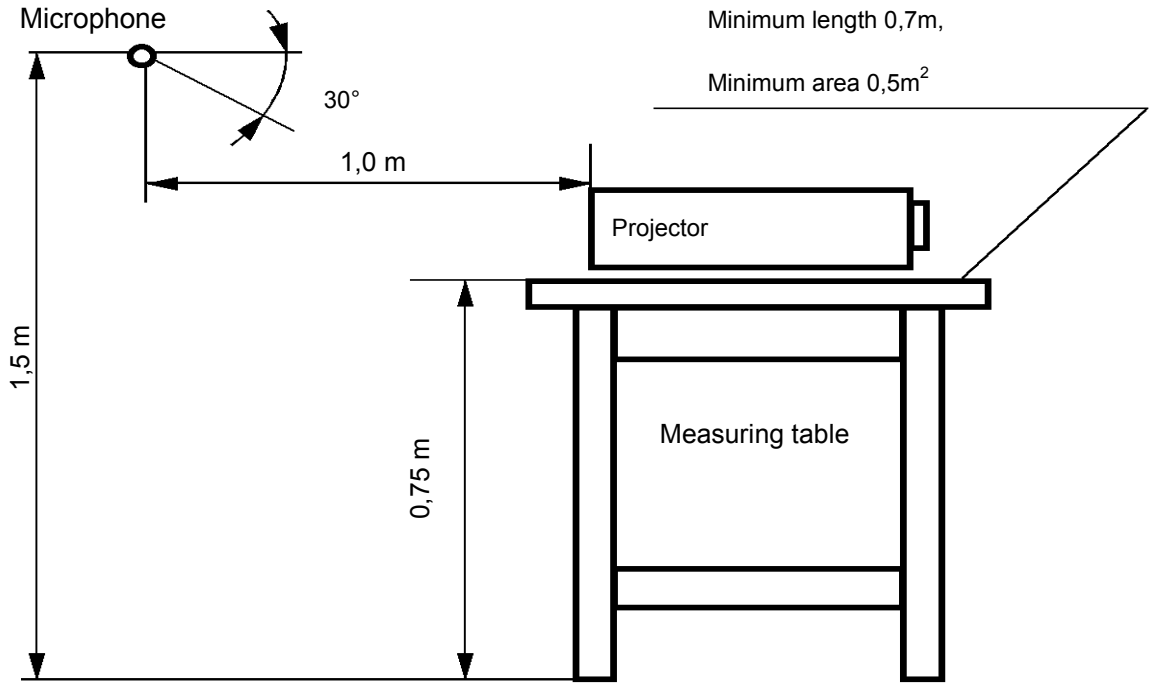

Figure B.3 — Acoustic Noise measuring procedure

© ISO/IEC 2005 All rights reserved

Copyright International Organization for Standardization
Reproduced by IHS under license with ISO
No reproduction or networking permitted without license from IHS
Not for Resale

B.5.2.3 Acoustic Noise level (calculation method)

By calculating the average value from the following formula for measurements obtained in the idling mode and all the operating modes, the greatest value must be used as the acoustic noise level.

$$L_{\mathrm{p}} = 10 \log \left[\frac{1}{4} \left(10^{0,1L_1} + 10^{0,1L_2} + 10^{0,1L_3} + 10^{0,1L_4} \right) \right]$$

where

L_{p} is acoustic noise level;

L_1 is measurements at the front, rear, left, and right sides where corrections for background acoustic noise are made;

L_2 is measurements at the front, rear, left, and right sides where corrections for background acoustic noise are made;

L_3 is measurements at the front, rear, left, and right sides where corrections for background acoustic noise are made;

L_4 is measurements at the front, rear, left, and right sides where corrections for background acoustic noise are made.

B.6 Power consumption

The power consumption at the rated input voltage shall be measured and the highest value recorded.

© ISO/IEC 2005 – All rights reserved
Copyright International Organization for Standardization
Reproduced by IHS under license with ISO
No reproduction or networking permitted without license from IHS
Not for Resale

Bibliography

[1] ISO 9296, *Acoustics — Declared noise emission values of computer and business equipment*

[2] IEC 61947-1:2002, *Electronic projection — Measurement and documentation of key performance*

[3] IEC 60107-2, *Methods of measurement on receivers for television broadcast transmissions — Part 2: Audio channels — General methods for monophonic channels*

[4] IEC 60107-1, *Methods of measurement on receivers for television broadcast transmissions — Part 1: General considerations — Measurements at radio and video frequencies*

[5] ISO 7779, *Acoustics — Measurement of airborne noise emitted by information technology and telecommunications equipment*

© ISO/IEC 2005 – All rights reserved

Copyright International Organization for Standardization
Reproduced by IHS under license with ISO
No reproduction or networking permitted without license from IHS
Not for Resale

ICS 35.260

Price based on 15 pages

© ISO/IEC 2005 – All rights reserved
Copyright International Organization for Standardization
Reproduced by IHS under license with ISO
No reproduction or networking permitted without license from IHS
Not for Resale