ISO 2110 89 ■ 4851903 0109844 7 ■

INTERNATIONAL STANDARD

ISO 2110

Third edition
1989-10-01

AMENDMENT 1
1991-09-15

Information technology — Data communication — 25-pole DTE/DCE interface connector and contact number assignments

AMENDMENT 1: Interface connector and contact assignments for a DTE/DCE interface for data signalling rates above 20 000 bit/s

Technologies de l'information — Communication de données — Connecteur d'interface ETTD/ETCD à 25 pôles et affectation des numéros de contacts

AMENDEMENT 1: Connecteur d'interface et affectation des numéros de contacts à l'interface ETTD/ETCD pour un débit binaire supérieur à 20 kbit/s

Reference number
ISO 2110 : 1989/Amd.1 : 1991 (E)

Copyright International Organization for Standardization
Provided by IHS under license with ISO
No reproduction or networking permitted without license from IHS

Not for Resale

Foreword

ISO (the International Organization for Standardization) and IEC (the International Electrotechnical Commission) form the specialized system for worldwide standardization. National bodies that are members of ISO or IEC participate in the development of International Standards through technical committees established by the respective organization to deal with particular fields of technical activity. ISO and IEC technical committees collaborate in fields of mutual interest. Other international organizations, governmental and non-governmental, in liaison with ISO and IEC, also take part in the work.

In the field of information technology, ISO and IEC have established a joint technical committee, ISO/IEC JTC 1. Draft International Standards adopted by the joint technical committee are circulated to national bodies for voting. Publication as an International Standard requires approval by at least 75 % of the national bodies casting a vote.

Amendment 1 to International Standard ISO 2110 : 1989 was prepared by Joint Technical Committee ISO/IEC JTC 1, *Information technology.*

Annex B of this Amendment is for information only.

© ISO/IEC 1991
All rights reserved. No part of this publication may be reproduced or utilized in any form or by any means, electronic or mechanical, including photocopying and microfilm, without permission in writing from the publisher.

ISO/IEC Copyright Office • Case postale 56 • CH-1211 Genève 20 • Switzerland
Printed in Switzerland

Copyright International Organization for Standardization
Provided by IHS under license with ISO
No reproduction or networking permitted without license from IHS
Not for Resale

Information technology — Data communication — 25-pole DTE/DCE interface connector and contact number assignments

AMENDMENT 1: Interface connector and contact assignments for a DTE/DCE interface for data signalling rates above 20 000 bit/s

Page 1

Clause 1

Add the following:

"In the case where operation exceeding 20 000 bit/s is required, the electrical characteristics shall be in accordance with CCITT Recommendation V.10 and CCITT Recommendation V.11."

Clause 2

Insert the following after "CCITT Recommendation S.16 : 1989":

"CCITT Recommendation V.10 : 1988, *Electrical characteristics for unbalanced double-circuit interchange circuits for general use with integrated circuit equipment in the field of data communications.*

CCITT Recommendation V.11 : 1988, *Electrical characteristics for balanced double-circuit interchange circuits for general use with integrated circuit equipment in the field of data communications.*"

Pages 4 and 5

Table 1

Add the following column and add the following notes:

	M Operation above 20 000 bit/s[13]
1	[1]
2	103-A
3	104-A
4	105-A/133-A
5	106-A
6	107[15]
7	102-A
8	109-A
9	115-B
10	109-B
11	113-B
12	114-B
13	106-B
14	103-B
15	114-A
16	104-B
17	115-A
18	141[15]
19	105-B/133-B
20	108[15]
21	140[15]
22	125[15]
23	102-B
24	113-A
25	142
Electrical characteristics	V.11/V.10[14]

13 Reference to the appropriate V. Series Recommendation(s) to be added when CCITT specifies the use of these electrical characteristics in the said Recommendations.

14 Equipment designers shall take note of the fact that the predominant use of this connector is in devices using electrical characteristics conforming to CCITT Recommendation V.28. Therefore, equipment using V.10/V.11 electrical characteristics must be designed so that it can withstand the higher voltages normally associated with V.28 electrical characteristics because of the possibility of incorrect interconnection with these devices.

15 V.10 electrical characteristics.

Copyright International Organization for Standardization
Provided by IHS under license with ISO
No reproduction or networking permitted without license from IHS
Not for Resale

Page 6

Table 2

Add the following:

Circuit number	Description
133	Ready for receiving

Page 14

Annex B (new)

Add the following:

Annex B

(informative)

Interoperation with adapters

B.1 CCITT Recommendation V.36 and CCITT Recommendation V.37

Interoperation is possible between equipment using this International Standard, table 1, column M, and existing equipment designed to support wideband modems as specified in CCITT Recommendation V.36 and CCITT Recommendation V.37.

Table B.1 illustrates the contact assignments for ISO 4902 with a cross reference to the corresponding CCITT Recommendation V.24 circuit assignments for the above column. It should be noted that Circuits 107 and 108 have an "A" and "B" assignment (use CCITT V.11 electrical characteristics) in ISO 4902, whereas they have a single assignment (use CCITT V.10 electrical characteristics) in ISO 2110, column M. Therefore, they require the use of an active interconnect circuit, similar to that shown in figure B.1, on circuits where a V.11 driver is being used with a V.10 receiver.

B.2 CCITT Recommendation V.35

Although CCITT Recommendation V.35 is no longer recommended for use by CCITT, interoperation between ISO 2110, column M, and this equipment is possible. The use of an active circuit (similar to that shown in figure B.1) is recommended for the case where a V.11 driver is connected to a V.35 unbalanced (V.28) receiver.

Table B.1 illustrates the contact assignments for ISO 2593 (associated with CCITT Recommendation V.35) and the corresponding contacts for ISO 2110, column M operation, specifying the type of interconnecting device to be used.

Table B.1 — Interconnection of ISO 2110, column M, with ISO 4902 and ISO 2593

	ISO 2110 column M	ISO 4902, CCITT V.36/V.37	ISO 2593, CCITT V.35
Circuit	Contact	Contact	Contact
	2)		
103-A	2	4	P
104-A	3	6	R
105-A	4	7	C[1]
106-A	5	9	D[1]
107	6	11, 29[1]	E
102-A	7	19	B
109-A	8	13	F[1]
115-B	9	26	X
109-B	10	31	F[1]
113-B	11	35	W
114-B	12	23	AA
106-B	13	27	D[1]
103-B	14	22	S
114-A	15	5	Y
104-B	16	24	T
115-A	17	8	V
141	18	10	L
105-B	19	25	C[1]
108	20	12, 30[1]	H
140	21	14	N
125	22	15	J
102-B	23	20	B
113-A	24	17	U
142	25	18	NN[1]

1) May require active interconnect circuit.

2) See table 1, note 1.

Copyright International Organization for Standardization
Provided by IHS under license with ISO
No reproduction or networking permitted without license from IHS
Not for Resale

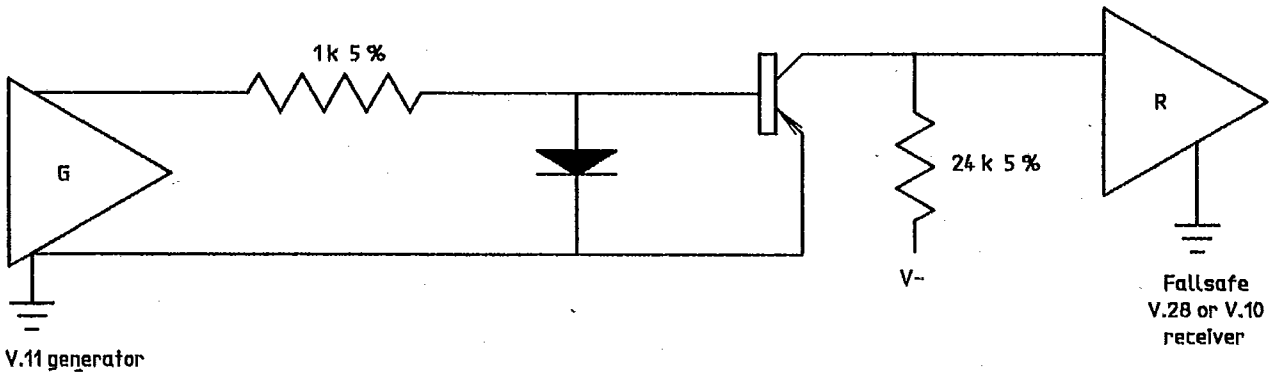

Figure B.1 — Active interconnect circuit

Copyright International Organization for Standardization
Provided by IHS under license with ISO
No reproduction or networking permitted without license from IHS
Not for Resale

ISO 2110 : 1989/Amd.1 : 1991 (E)

UDC 681.327.8 : 621.316.541

Descriptors: data processing, data transmission, network interconnection, data communication equipment, connecting equipment, electric connectors, multi-contact connectors, connector pins, specifications, dimensions, layout, numbering.

Price based on 3 pages

Copyright International Organization for Standardization
Provided by IHS under license with ISO
No reproduction or networking permitted without license from IHS

Not for Resale

ISO 2110 89 ■ 4851903 0091780 3 ■

Q-60-02

INTERNATIONAL STANDARD

ISO 2110

Third edition
1989-10-01

Information technology — Data communication — 25-pole DTE/DCE interface connector and contact number assignments

Technologies de l'information — Communication de données — Connecteur d'interface ETTD/ETCD à 25 pôles et affectation des numéros de contact

Reference number
ISO 2110 : 1989 (E)

Copyright International Organization for Standardization
Provided by IHS under license with ISO
No reproduction or networking permitted without license from IHS

Not for Resale

Foreword

ISO (the International Organization for Standardization) is a worldwide federation of national standards bodies (ISO member bodies). The work of preparing International Standards is normally carried out through ISO technical committees. Each member body interested in a subject for which a technical committee has been established has the right to be represented on that committee. International organizations, governmental and non-governmental, in liaison with ISO, also take part in the work. ISO collaborates closely with the International Electrotechnical Commission (IEC) on all matters of electrotechnical standardization.

Draft International Standards adopted by the technical committees are circulated to the member bodies for approval before their acceptance as International Standards by the ISO Council. They are approved in accordance with ISO procedures requiring at least 75 % approval by the member bodies voting.

International Standard ISO 2110 was prepared by Technical Committee ISO/TC 97, *Information processing systems.*

This third edition cancels and replaces the second edition (ISO 2110 : 1980), of which it constitutes a minor revision: certain terms have been aligned with the terms and definitions used by IEC.

Annex A of this International Standard is for information only.

© ISO 1989
All rights reserved. No part of this publication may be reproduced or utilized in any form or by any means, electronic or mechanical, including photocopying and microfilm, without permission in writing from the publisher.

International Organization for Standardization
Case postale 56 • CH-1211 Genève 20 • Switzerland
Printed in Switzerland

Copyright International Organization for Standardization
Provided by IHS under license with ISO
No reproduction or networking permitted without license from IHS
Not for Resale

Information technology — Data communication — 25-pole DTE/DCE interface connector and contact number assignments

1 Scope

This International Standard specifies the 25-pole connector and the assignment of contact numbers at the interface between data terminal equipment (DTE) and data circuit-terminating equipment (DCE) or parallel automatic calling equipment (ACE). It is applicable to voice band modems, public data network (PDN) facilities, telegraph signal converters, and automatic calling equipment where CCITT [1] Recommendations V.24 and V.28 are applicable.

In the case of the PDN attachment through the X.20 interface, the functions of the interchange circuits are in accordance with CCITT Recommendation X.24.

In the case of the V.20 type outstation interface, the electrical characteristics are in accordance with CCITT Recommendation V.31 or V.31 bis.

International Standard ISO/IEC 2110 additionally provides the dimensions of the connector housing, as well as the recommended means of providing a locking device (latching block) and connector shielding.

2 Normative references

The following standards contain provisions which, through reference in this text, constitute provisions of this International Standard. At the time of publication, the editions indicated were valid. All standards are subject to revision, and parties to agreements based on this International Standard are encouraged to investigate the possibility of applying the most recent editions of the standards indicated below. Members of IEC and ISO maintain registers of currently valid International Standards.

ISO 261 : 1973, *ISO general purpose metric screw threads — General plan.*

ISO 8480 : 1987, *Information processing — Data communication — DTE/DCE interface back-up control operation using the 25-pole connector.*

CCITT Recommendation S.16 : 1989, *Connection to the telex network of an automatic terminal using a V.24 [1] DCE/DTE interface.*

CCITT Recommendation V.19 : 1989, *Modems for parallel data transmission using telephone signalling frequencies.*

CCITT Recommendation V.20 : 1989, *Parallel data transmission modems standardized for universal use in the general switched telephone network.*

CCITT Recommendation V.21 : 1989, *300 bits per second duplex modem standardized for use in the general switched telephone network.*

CCITT Recommendation V.22 : 1989, *1 200 bits per second duplex modem standardized for use on the general switched telephone network and on point-to-point 2-wire leased telephone-type circuits.*

CCITT Recommendation V.22 bis : 1989, *2 400 bits per second duplex modem using the frequency division technique standardized for use on the general switched telephone network and on point-to-point 2-wire leased telephone-type circuits.*

CCITT Recommendation V.23 : 1989, *600/1 200-baud modem standardized for use in the general switched telephone network.*

CCITT Recommendation V.24 : 1989, *List of definitions for interchange circuits between data terminal equipment and data circuit-terminating equipment.*

CCITT Recommendation V.25 : 1989, *Automatic answering equipment and/or parallel automatic calling equipment on the general switched telephone network including disabling of echo control devices for both manually and automatically established calls.*

CCITT Recommendation V.25 bis : 1989, *Automatic calling and/or answering equipment on the general switched telephone network (GSTN) using the 100-series interchange circuits.*

CCITT Recommendation V.26 : 1989, *2 400 bits per second modem standardized for use on 4-wire leased telephone-type circuits.*

1) International Telegraph and Telephone Consultative Committee.

Copyright International Organization for Standardization
Provided by IHS under license with ISO
No reproduction or networking permitted without license from IHS
Not for Resale

CCITT Recommendation V.26 bis : 1989, *2 400/1 200 bits per second modem standardized for use in the general switched telephone network.*

CCITT Recommendation V.26 ter : 1989, *2 400 bits per second duplex modem using the echo cancellation technique standardized for use on the general switched telephone network and on point-to-point 2-wire leased telephone-type circuits.*

CCITT Recommendation V.27 : 1989, *4 800 bits per second modem with manual equalizer standardized for use on leased telephone-type circuits.*

CCITT Recommendation V.27 bis : 1989, *4 800/2 400 bits per second modem with automatic equalizer standardized for use on leased telephone-type circuits.*

CCITT Recommendation V.27 ter : 1989, *4 800/2 400 bits per second modem standardized for use in the general switched telephone network.*

CCITT Recommendation V.28 : 1989, *Electrical characteristics for unbalanced double-current interchange circuits.*

CCITT Recommendation V.29 : 1989, *9 600 bits per second modem standardized for use on point-to-point 4-wire leased telephone-type circuits.*

CCITT Recommendation V.31 : 1989, *Electrical characteristics for single-current interchange circuits controlled by contact closure.*

CCITT Recommendation V.31 bis : 1989, *Electrical characteristics for single-current interchange circuits using optocouplers.*

CCITT Recommendation V.32 : 1989, *A family of two-wire, duplex modems operating at data signalling rates of up to 9 600 bit/s for use on the general switched telephone network and on leased telephone-type circuits.*

CCITT Recommendation V.33 : 1989, *14 400 bits per second modem standardized for use on point-on-point 4-wire leased telephone-type circuits.*

CCITT Recommendation X.20 : 1989, *Interface between data terminal equipment (DTE) and data circuit-terminating equipment (DCE) for start-stop transmission services on public data networks.*

CCITT Recommendation X.20 bis : 1989, *Use on public data networks of data terminal equipment (DTE) which is designed for interfacing to asynchronous duplex V-series modems.*

CCITT Recommendation X.21 bis : 1989, *Use on public data networks of data terminal equipment (DTE) which is designed for interfacing to synchronous V-series modems.*

CCITT Recommendation X.24 : 1989, *List of definitions for interchange circuits between data terminal equipment (DTE) and data circuit-terminating equipment (DCE) on public data networks.*

IEC Publication 50(581) : 1978, *International Electrotechnical Vocabulary — Chapter 581: Electromechanical components for electronic equipment.*

IEC Publication 807-2 : 1985, *Rectangular connectors for frequencies below 3 MHz — Part 2: Detail specification for a range of connectors with round contacts — Fixed solder contact types.*

3 Definitions

The following definitions have been taken from IEC Publication 50(581) : 1978.

3.1 cable adaptor: A part of a connector or an accessory consisting of a rigid housing for attachment to the connector body. It may incorporate provision for a cable clamp or seal for terminating screens and provide shielding from electrical interference. It may be straight or angled.

3.2 connector housing: A part of a connector into which the insert and contacts are assembled.

3.3 contact arrangement: The number, spacing and configuration of contacts in a component.

3.4 female contact: A contact intended to make electrical engagement on its inner surface and which will accept entry of a male contact.

3.5 intermateable connectors: Two connectors are intermateable when they are capable of being connected electrically and mechanically but without regard to their performance and intermountability.

3.6 locking device: A feature incorporated in certain components to provide mechanical retention of their mating parts.

3.7 male contact: A contact intended to make electrical engagement on its outer surface and which will enter a female contact.

3.8 (n-pole-)connector: A component which terminates conductors for the purpose of providing connection and disconnection to a suitable mating component.

4 Connector

A 25-pole connector shall be provided for the DTE/DCE interface. A separate 25-pole connector shall be provided for the parallel automatic calling equipment interface if the facility in accordance with CCITT Recommendation V.25 is used.

Figures 1 to 6 illustrate the 25-pole connector. Only those dimensions that are essential for mating are shown.

Figure 1 illustrates the DTE connector which has 25 male contacts in a connector housing. Figure 2 Illustrates the DCE connector which has 25 female contacts in a connector housing. The connector housing on the DCE connector is dimensioned to fit inside the connector housing on the DTE connector (see figures 1 and 2). Contact numbering is specified in figures 1 and 2. Figure 3 illustrates the dimensions for the contact

Copyright International Organization for Standardization
Provided by IHS under license with ISO
No reproduction or networking permitted without license from IHS

Not for Resale

spacing. Figures 4 and 5 illustrate the dimensions for the male and female contacts respectively.

The DCE connector may be equipped with a locking device consisting of two latching blocks as specified in figure 6. Due to the fact that the latching blocks have threaded holes which can act as nuts, the DTE connector may be equipped either with lever devices for latching to the latching blocks on the DCE connector or with screws that fit into the threaded holes in the latching blocks.

Latching blocks shall use either the 4-40 UNC thread or, if required by national regulations or mutual user agreement, M3 as specified in figure 6.

When procuring equipment internationally which will use this 25-pole connector, the user shall specify the thread type in accordance with national requirements.

Sufficient connector dimensions are provided in this International Standard to ensure intermateable connectors. They are consistent with the detailed connector specification in IEC Publication 807-2.

In annex A, diagrams for finger clearance areas are given to provide guidance for equipment designers. Figure A.1 shows the maximum DTE connector outline including all means for lactching to the latching blocks. Figure A.2 shows the minimum DCE connector spacing when multiple interface arrangements are used.

5 Assignment of contact numbers

The assignment of contact numbers is given in table 1.

The list of the interchange circuits is given in table 2. Their provision and use shall be in conformity with the CCITT Recommendations, referred to in the headings of table 1.

6 Connector shielding

Connector shielding is optional. If it is used, for example due to national regulations, etc., it shall be accomplished by the use of metallic connector housings on both the DTE connector and the DCE connector.

Copyright International Organization for Standardization
Provided by IHS under license with ISO
No reproduction or networking permitted without license from IHS

Not for Resale

Copyright International Organization for Standardization
Provided by IHS under license with ISO
No reproduction or networking permitted without license from IHS
Not for Resale

ISO 2110 89 ■ 4851903 0091785 2 ■

Table 1 — Assignment of contact numbers

Contact number	Interchange circuit numbers and remarks												
	Voice band serial modems[11]				Public data network			Telegraph	Voice band parallel modems				Automatic calling[10]
	A V.21, V.22, V.22 bis, V.26 ter, V.32, V.33	B V.23[12]	C1[8] V.26, V.26 bis, V.27, V.27 bis, V.27 ter, V.29	C2[9] V.26, V.26 bis, V.27, V.27 bis, V.27 ter	D X.20 bis	E X.21 bis	F X.20[7]	G Telex Other	H V.19, V.20(A) Instation	I V.20(A) Outstation	J V.20(B) Instation	K V.20(B) Outstation	L V.25 S.16
1	[1]	[1]	[1]	[1]	[1]	[1]	[1]	[1]	[1]	[1]	[1]	[1]	[1]
2	103	103	103	103	103	103	T	103	[5]	192-A	[5]	119-A	211
3	104	104	104	104	104	104	R	104	A1[3]	A1[4]	A1[3]	A1[4]	205
4	105	105	105	105	F	105	F	N	A2[3]	A2[4]	A2[3]	A2[4]	202
5	106	106	106	106	106	106	F	106	A3[3]	A3[4]	A3[3]	A3[4]	210
6	107	107	107	107	107	107	F	107	A4[3]	B1[4]	A4[3]	B1[4]	213
7	102	102	102	102	102	102	G	102	131	B2[4]	131	B2[4]	201
8	109	109	109	109	109	109	F	109	109	B3[4]	109	B3[4]	F
9	N	N	N	N	N	N	N	N	C1[3]	C1[4]	C1[3]	C1[4]	N
10	N	N	N	N	N	N	N	N	C2[3]	C2[4]	C2[3]	C2[4]	N
11	126	N	N	N	F	N	N	N	C3[3]	C3[4]	C3[3]	C3[4]	F
12	112	122	F	122	F	F	N	F	C4[3]	192-B	C4[3]	119-B	F
13	F	121	F	121	F	F	N	F	B1[3]	[4]	B1[3]	[4]	204
14	F	118	F	118	F	F	N	F	B2[3]	125-A	B2[3]	125-A	206
15	114	[2]	114	114	F	114	N	F	B3[3]	125-B	B3[3]	125-B	207
16	F	119	F	119	F	F	N	F	B4[3]	105-A	B4[3]	105-A	208
17	115	[2]	115	115	F	115	N	F	191-A	105-B	118	105-B	209
18	141	141	141	141	141	141	F	132	191-B	129-A	121	129-A	F
19	F	120	F	120	F	F	F	F	130	129-B	120	129-B	F
20	108*	108*	108*	108*	108*	108*	F	108/2	105	119-A	105	122-A	F
21	140	140	140	140	140	140	F	F	125	119-B	125	122-B	F
22	125	125	125	125	125	125	F	125	108*	107-A	108*	107-A	203
23	111	111	111	111	N	N	F	N	107	107-B	107	107-B	N
24	113	N	113	113	N	F	F	N	102	108-A	102	108-A	N
25	142	142	142	142	142	142	F	F	124	108-B	124	108-B	F
Electrical characteristics	V.28	V.28	V.28	V.28	V.28	V.28	V.28	V.28	V.28[6]	V.31[6]	V.28	V.31 bis	V.28

Copyright International Organization for Standardization
Provided by IHS under license with ISO
No reproduction or networking permitted without license from IHS

Legend: N — Contact permanently reserved for national use.

F — Contact reserved for future international standardization and should not be used for national use.

* — Circuit 108/1 or circuit 108/2.

NOTES

1 Contact 1 is assigned for connecting the shields between tandem sections of shielded interface cable. The shield may be connected either to protective ground or to signal ground at either the DTE or DCE or both in accordance with national regulations.

Signal ground may be further connected to protective ground in accordance with national safety regulations. Caution should be exercised to avoid establishment of ground loops carrying high currents.

2 Where signal element timing is provided in the DCE, contact 15 will be used for circuit 114, and contact 17 will be used for circuit 115.

3 Received data circuits 104 are designated A1 to A4, B1 to B4, and C1 to C4 corresponding to their relevant frequency.

4 Transmitted data circuits 103 are designated A1 to A3, B1 to B3, and C1 to C3 corresponding to their relevant frequency, and all use contact 13 as the common return according to V.31.

5 Contact 2 is reserved for national use. Where circuit 110 is provided in the DCE, it will use contact 2.

6 The electrical characteristics of circuits 191 and 192 are subject to specification within V.19 and V.20.

7 The functions of the interchange circuits are in accordance with X.24. This column refers only to X.20 type DTE with V.28 electrical characteristics since it may interconnect with an X.20/V.10 DCE.

8 Column C1 is for synchronous modems without a backward channel.

9 Column C2 is for synchronous modems with a backward channel.

10 This colums does not apply to V.25 bis because in this case the information for call establishment is carried on circuit 103.

11 Where ISO 8480 is implemented, contact 14 is used for circuit 116/1 or 116/2 and contact 16 is used for circuit 117.

12 In applications (e.g. telematic services) where DCEs designed for asymmetrical duplex operation are used there are station A DCEs having only the transmitter of the data channel and the receiver of the backward channel and station B DCEs having only the receiver of the data channel and the transmitter of the backward channel. In these DCEs it is permissible to strap the interface circuits of the backward channel to the contacts of the data channel:

— in station A DCEs: circuit 119 to contact 3
and circuit 122 to contact 8

— in station B DCEs: circuit 118 to contact 2
and circuit 121 to contact 5

Not for Resale

Table 2 — List of interchange circuits

Circuit number	Description
102	Signal ground or common return
103	Transmitted data
104	Received data
105	Request to send
106	Ready for sending
107	Data set ready
108/1	Connect data set to line
108/2	Data terminal ready
109	Data channel received line signal detector
110	Data signal quality detector
111	Data signalling rate selector (DTE source)
112	Data signalling rate selector (DCE source)
113	Transmitter signal element timing (DTE source)
114	Transmitter signal element timing (DCE source)
115	Receiver signal element timing (DCE source)
116/1	Back-up switching in direct mode
116/2	Back-up switching in authorized mode
117	Standby indicator
118	Transmitted backward channel data
119	Received backward channel data
120	Transmit backward channel line signal
121	Backward channel ready
122	Backward channel received line signal detector
124	Select frequency groups
125	Calling indicator
126	Select transmit frequency
129	Request to receive
130	Transmit backward tone
131	Received character timing
132	Return to non-data mode
140	Loopback/Maintenance test
141	Local loopback
142	Test indicator
191	Transmitted voice answer
192	Received voice answer
201	Signal ground or common return
202	Call request
203	Data line occupied
204	Distant station connected
205	Abandon call
206	Digit signal (2^0)
207	Digit signal (2^1)
208	Digit signal (2^2)
209	Digit signal (2^3)
210	Present next digit
211	Digit present
213	Power indication
G	Signal ground or common return
T	Transmit
R	Receive

Copyright International Organization for Standardization
Provided by IHS under license with ISO
No reproduction or networking permitted without license from IHS

Not for Resale

Dimensions in millimetres

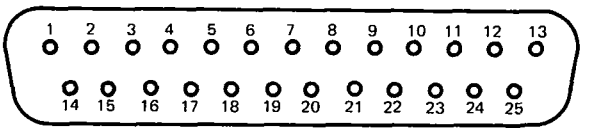

DTE contact arrangement viewed
from connector front (DCE side)

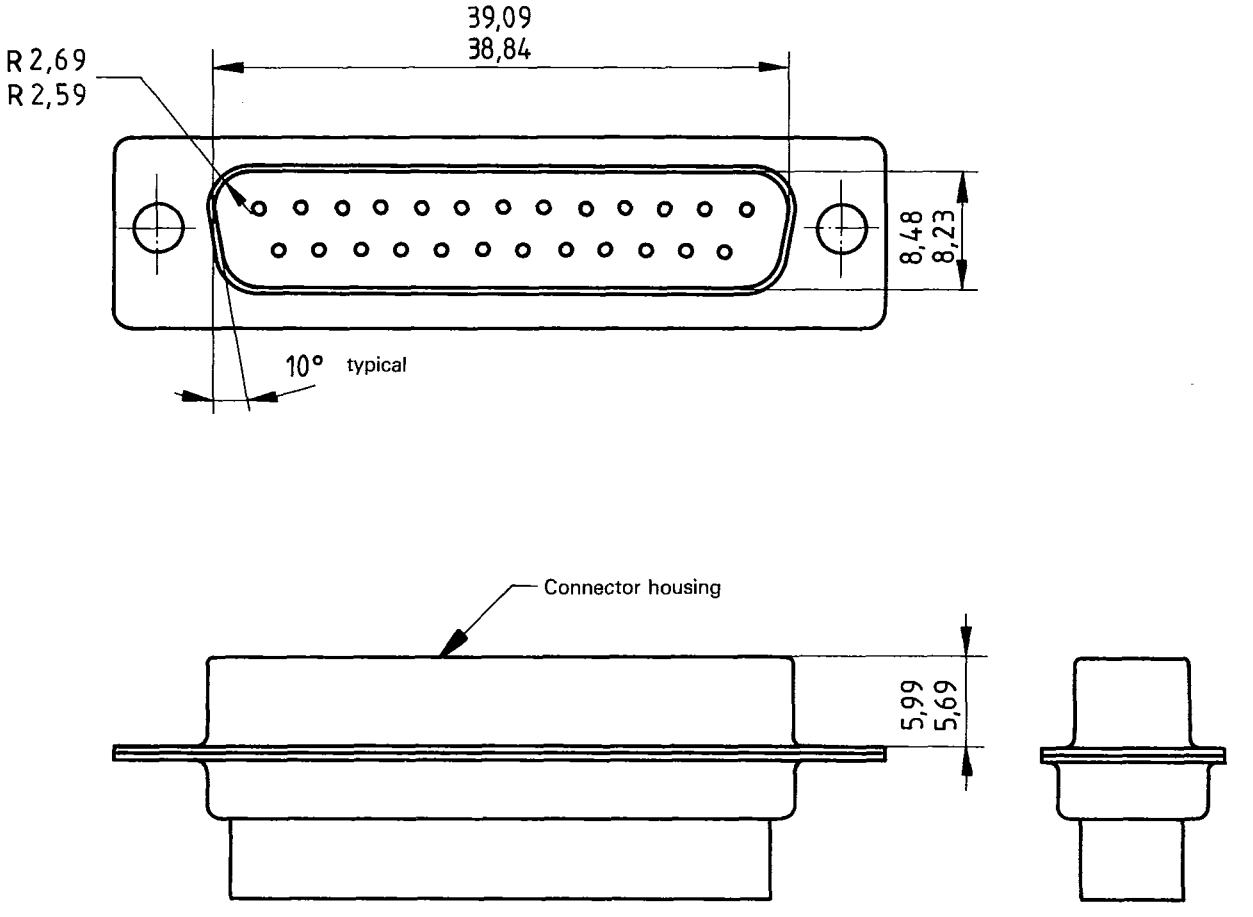

Figure 1 — DTE connector

Copyright International Organization for Standardization
Provided by IHS under license with ISO
No reproduction or networking permitted without license from IHS
Not for Resale

Dimensions in millimetres

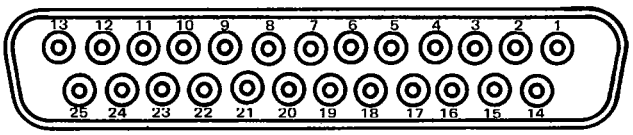

DCE contact arrangement viewed from connector front (DTE side)

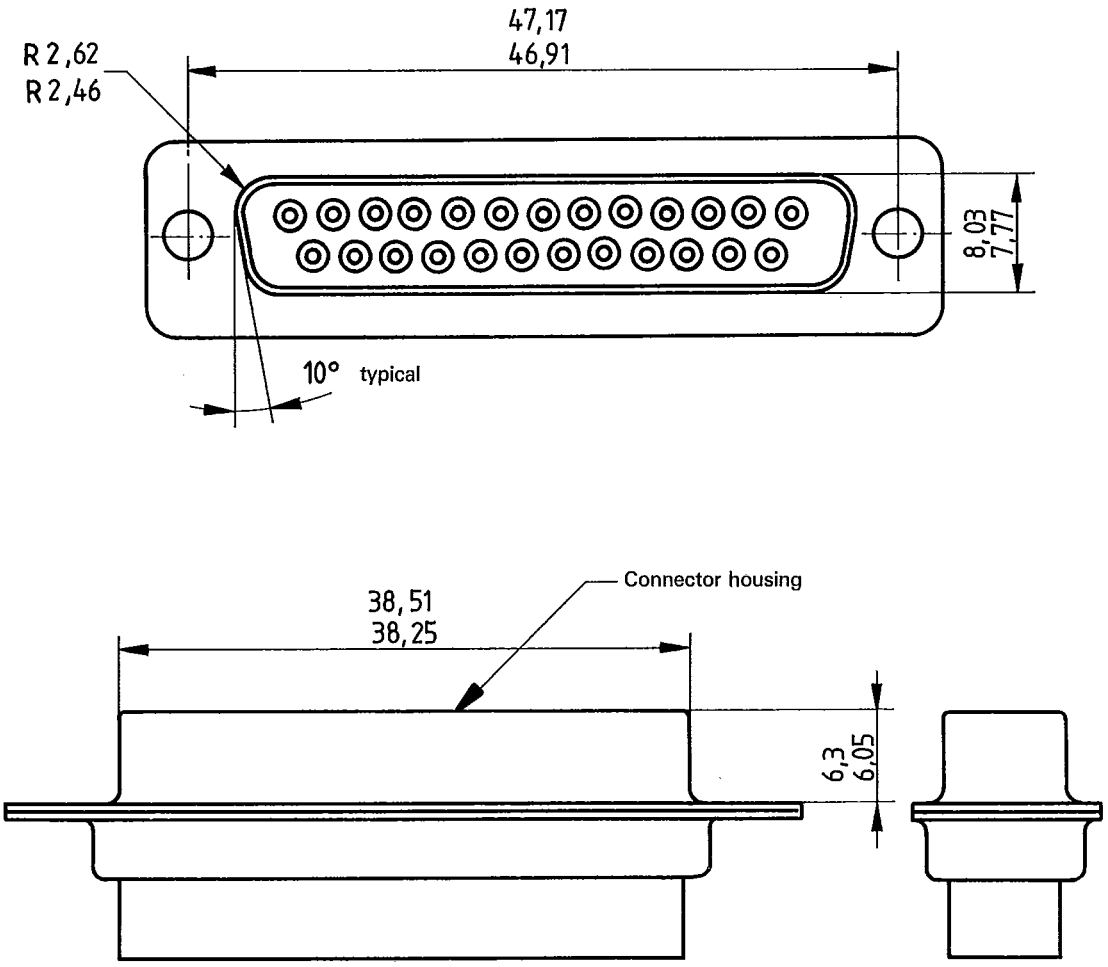

Figure 2 — DCE connector

Copyright International Organization for Standardization
Provided by IHS under license with ISO
No reproduction or networking permitted without license from IHS
Not for Resale

Dimensions in millimetres

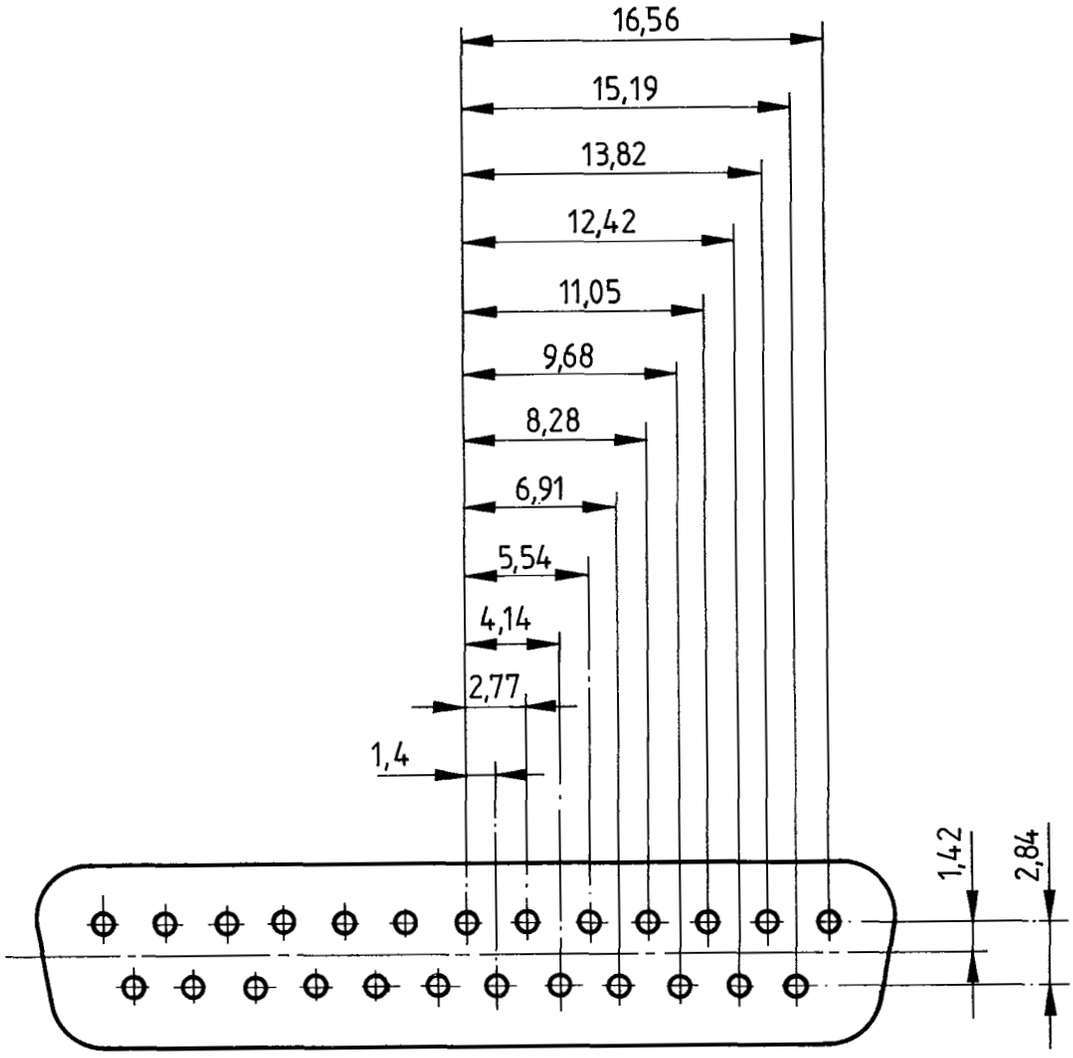

Figure 3 — Contact spacing dimensions

Copyright International Organization for Standardization
Provided by IHS under license with ISO
No reproduction or networking permitted without license from IHS

Not for Resale

Dimensions in millimetres

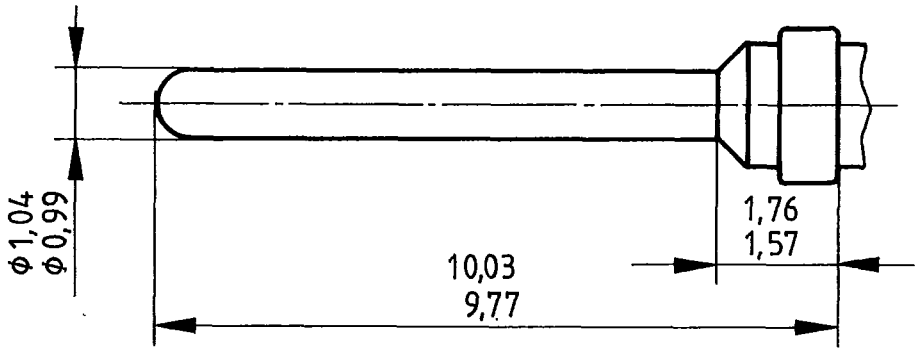

Figure 4 — Male contact

Dimensions in millimetres

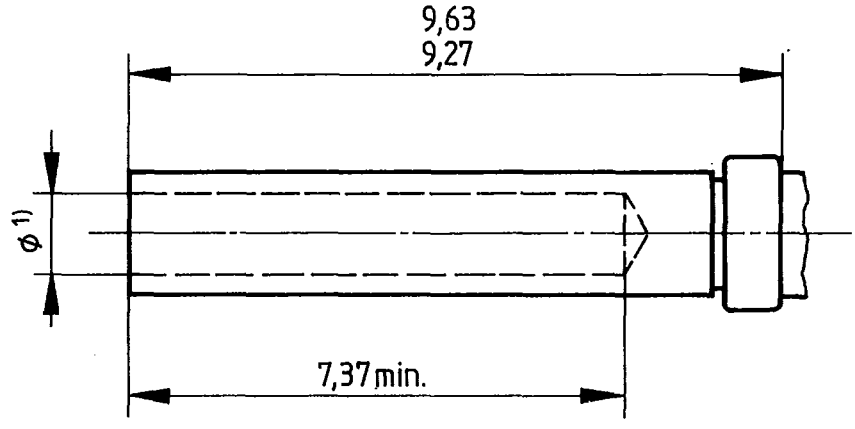

1) When the male contact is mated with the female contact, sufficient force should be applied by the female contact to ensure proper electrical contact.

Figure 5 — Female contact

Copyright International Organization for Standardization
Provided by IHS under license with ISO
No reproduction or networking permitted without license from IHS
Not for Resale

Copyright International Organization for Standardization
Provided by IHS under license with ISO
No reproduction or networking permitted without license from IHS
Not for Resale

Dimensions in millimetres

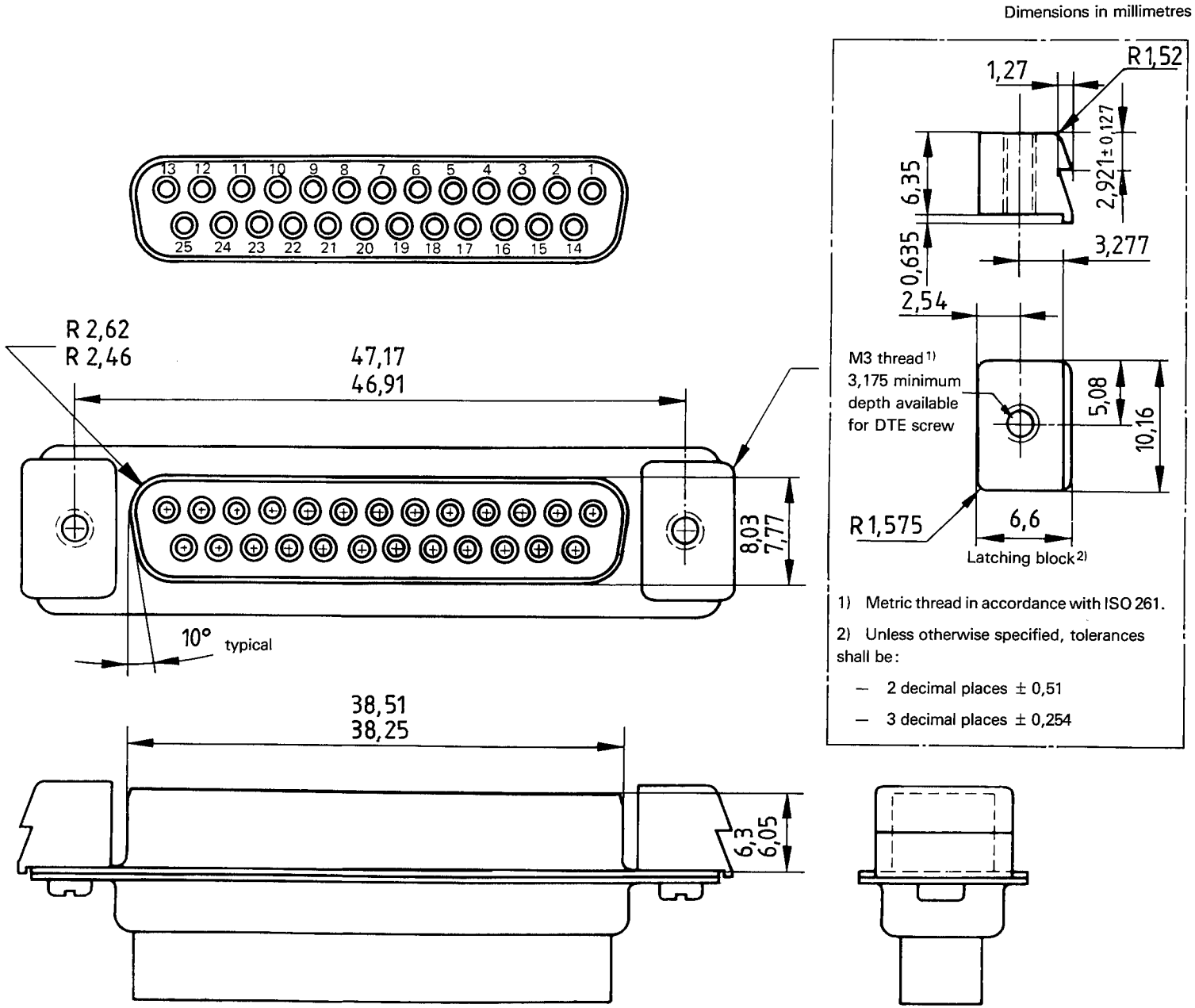

1) Metric thread in accordance with ISO 261.

2) Unless otherwise specified, tolerances shall be:

- 2 decimal places ± 0,51
- 3 decimal places ± 0,254

The information provided in this figure is for designers who use the latching block or metric screws or both.

Figure 6 — DCE connector with latching blocks

Annex A
(informative)

Diagrams for finger clearance

This annex provides guidance on finger clearance for equipment designers.

Figure A.1 shows the maximum DTE connector outline.

Figure A.2 shows the minimum recommended spacing between multiple DCE connectors, taking into account the various locking devices (levers, screws) of DTE connectors.

Dimensions in millimetres

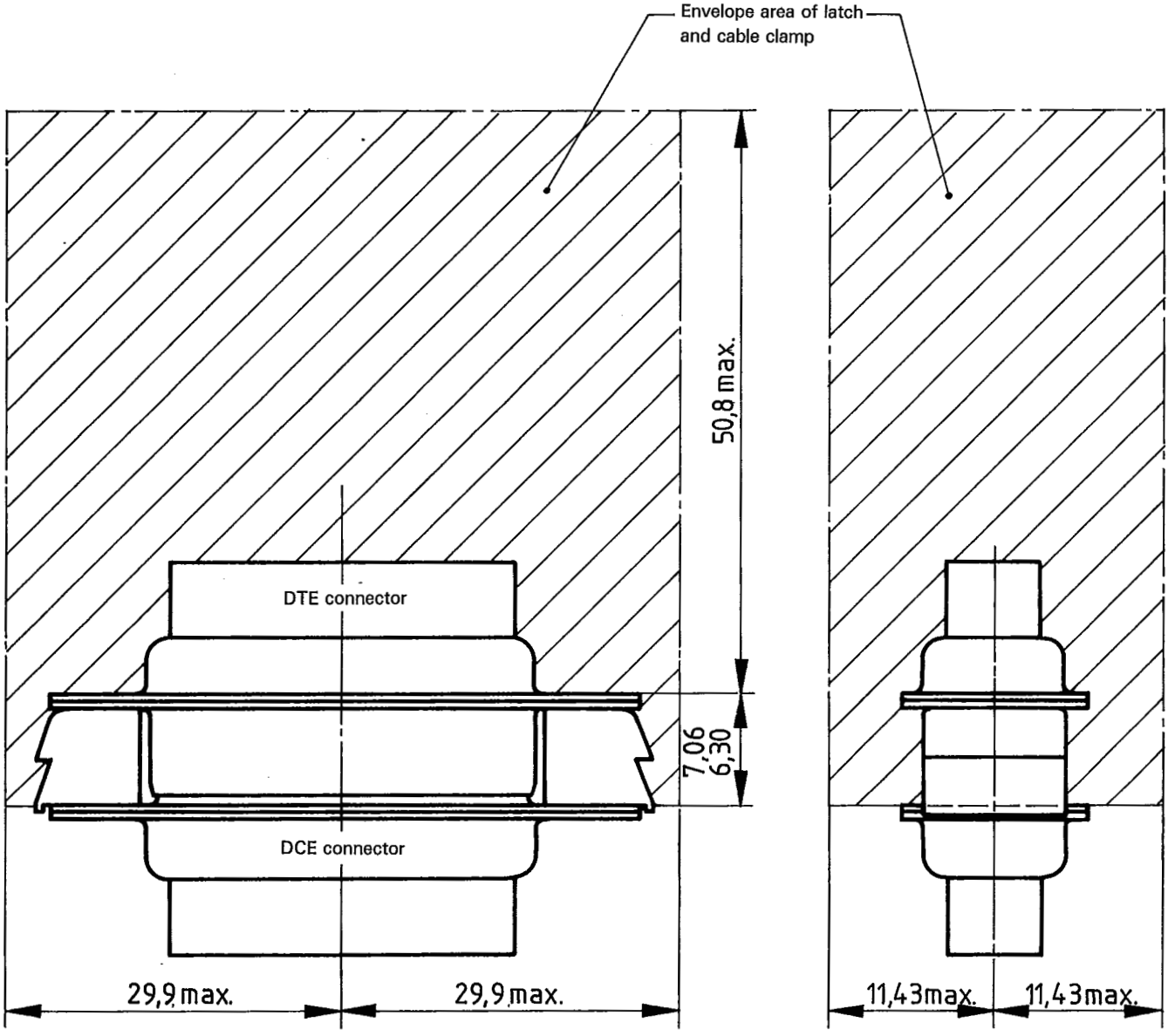

Figure A.1 — Maximum DTE connector outline

Copyright International Organization for Standardization
Provided by IHS under license with ISO
No reproduction or networking permitted without license from IHS
Not for Resale

Dimensions in millimetres

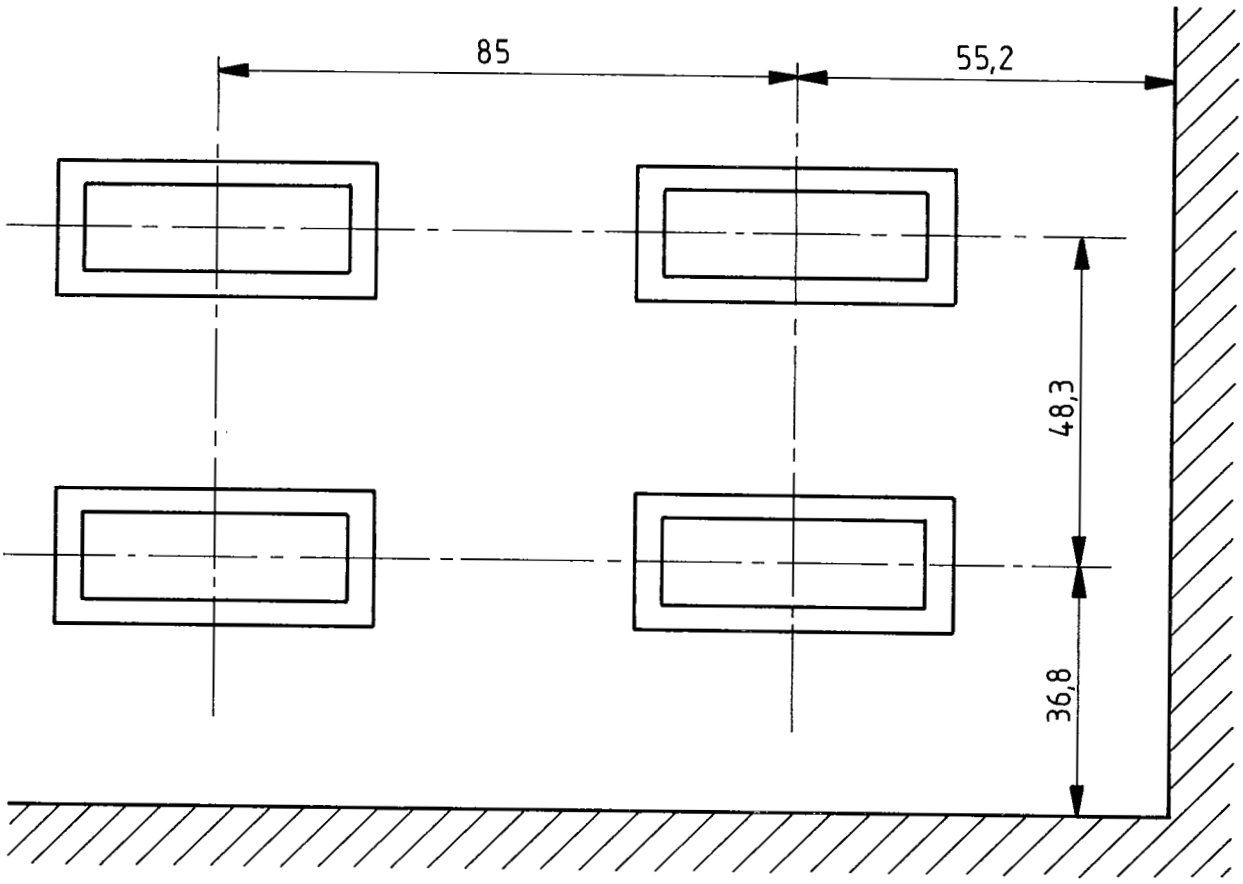

Figure A.2 — Minimum DCE connector spacing

Copyright International Organization for Standardization
Provided by IHS under license with ISO
No reproduction or networking permitted without license from IHS
Not for Resale

UDC 681.327.8 : 621.316.541

Descriptors: data processing, data transmission, network interconnection, data communication equipment, connecting equipment, electric connectors, connector pins, multi-contact connectors, specifications, dimensions, layout, numbering.

Price based on 13 pages

Copyright International Organization for Standardization
Provided by IHS under license with ISO
No reproduction or networking permitted without license from IHS
Not for Resale