INTERNATIONAL STANDARD

ISO/IEC 21000-4

First edition
2006-04-01

Information technology — Multimedia framework (MPEG-21) —

Part 4: Intellectual Property Management and Protection Components

Technologies de l'information — Cadre multimédia (MPEG-21) —

Partie 4: Composants de gestion et de protection de propriété intellectuelle

Reference number
ISO/IEC 21000-4:2006(E)

© ISO/IEC 2006

Copyright International Organization for Standardization
Provided by IHS under license with ISO
No reproduction or networking permitted without license from IHS

Not for Resale

PDF disclaimer

This PDF file may contain embedded typefaces. In accordance with Adobe's licensing policy, this file may be printed or viewed but shall not be edited unless the typefaces which are embedded are licensed to and installed on the computer performing the editing. In downloading this file, parties accept therein the responsibility of not infringing Adobe's licensing policy. The ISO Central Secretariat accepts no liability in this area.

Adobe is a trademark of Adobe Systems Incorporated.

Details of the software products used to create this PDF file can be found in the General Info relative to the file; the PDF-creation parameters were optimized for printing. Every care has been taken to ensure that the file is suitable for use by ISO member bodies. In the unlikely event that a problem relating to it is found, please inform the Central Secretariat at the address given below.

© ISO/IEC 2006

All rights reserved. Unless otherwise specified, no part of this publication may be reproduced or utilized in any form or by any means, electronic or mechanical, including photocopying and microfilm, without permission in writing from either ISO at the address below or ISO's member body in the country of the requester.

ISO copyright office
Case postale 56 • CH-1211 Geneva 20
Tel. + 41 22 749 01 11
Fax + 41 22 749 09 47
E-mail copyright@iso.org
Web www.iso.org

Published in Switzerland

--`,,```,,,,````-`-`,,`,,`,`,,`---

;;
Copyright International Organization for Standardization
Provided by IHS under license with ISO
No reproduction or networking permitted without license from IHS

© ISO/IEC 2006 – All rights reserved

Not for Resale

Contents

Page

Foreword ... vi

Introduction ... viii

1 Scope ... 1

2 Normative references ... 1

3 Terms and definitions, symbols, abbreviated terms ... 2
3.1 Terms and definitions ... 2
3.2 Symbols and abbreviated terms ... 3

4 IPMP Components Overview ... 4
4.1 Organization of the specification ... 4
4.2 Overview of IPMP Components ... 4
4.3 Relationship between IPMP Components and other parts of ISO/IEC 21000 ... 5
4.3.1 Introduction ... 5
4.3.2 Relationship between IPMP Components and ISO/IEC 21000-2 Digital Item Declaration ... 5
4.3.3 Relationship between IPMP Components and ISO/IEC 21000-3 Digital Item Identification ... 5
4.3.4 Relationship between IPMP Components and ISO/IEC 21000-5 Rights Expression Language ... 5
4.3.5 Relationship between IPMP Components and ISO/IEC 21000-7 Digital Item Adaptation ... 6
4.4 Namespaces and conventions ... 6
4.4.1 Namespaces ... 6
4.4.2 Namespace conventions ... 6

5 IPMP Digital Item Declaration Language Overview ... 6
5.1 Introduction ... 6
5.2 Schema wrapper ... 7

6 IPMP Digital Item Declaration Representation ... 7
6.1 Introduction ... 7
6.2 IPMP DIDL elements for the DID model ... 8
6.2.1 ipmpdidl:Container ... 9
6.2.2 ipmpdidl:Item ... 10
6.2.3 ipmpdidl:Descriptor ... 10
6.2.4 ipmpdidl:Statement ... 11
6.2.5 ipmpdidl:Component ... 12
6.2.6 ipmpdidl:Anchor ... 12
6.2.7 ipmpdidl:Fragment ... 13
6.2.8 ipmpdidl:Condition ... 14
6.2.9 ipmpdidl:Choice ... 14
6.2.10 ipmpdidl:Selection ... 15
6.2.11 ipmpdidl:Resource ... 16
6.2.12 ipmpdidl:Annotation ... 16
6.2.13 ipmpdidl:Assertion ... 17
6.3 IPMP DIDL Elements particular to the IPMP DIDL Representation ... 18
6.3.1 ipmpdidl:ProtectedAsset ... 18
6.3.2 ipmpdidl:Identifier ... 19
6.3.3 ipmpdidl:Info ... 20
6.3.4 ipmpdidl:ContentInfo ... 20
6.3.5 ipmpdidl:Contents ... 20

7 IPMP Information Descriptor ... 21
7.1 Introduction ... 21
7.2 Schema wrapper ... 22

--`,,```,,,,````-`-`,,`,,`,`,,`---

© ISO/IEC 2006 – All rights reserved

Copyright International Organization for Standardization
Provided by IHS under license with ISO
No reproduction or networking permitted without license from IHS
Not for Resale

7.3 IPMPInfoDescriptor 22
7.3.1 Introduction 22
7.3.2 Syntax 22
7.3.3 Semantics 23
7.3.4 Example 23
7.4 Tool 23
7.4.1 Introduction 23
7.4.2 Syntax 23
7.4.3 Semantics 24
7.4.4 ToolBaseDescription 24
7.4.5 ToolRef 32
7.4.6 InitializationSettings 33
7.4.7 RightsDescriptor 34
7.4.8 Signature 36
7.4.9 Example 37
7.5 RightsDescriptor 37
7.5.1 Syntax 37
7.5.2 Semantics 37
7.6 Signature 37
7.6.1 Syntax 37
7.6.2 Semantics 37

8 IPMP General Information Descriptor 37
8.1 Introduction 37
8.2 Schema wrapper 38
8.3 IPMPGeneralInfoDescriptor 38
8.3.1 Syntax 39
8.3.2 Semantics 39
8.3.3 Example 39
8.4 ToolList 39
8.4.1 Introduction 39
8.4.2 Syntax 40
8.4.3 Semantics 40
8.4.4 ToolDescription 40
8.4.5 Signature 45
8.4.6 Example 45
8.5 LicenseCollection 46
8.5.1 Syntax 46
8.5.2 Semantics 46
8.5.3 RightsDescriptor 46
8.5.4 Example 46
8.6 Signature 47
8.6.1 Syntax 47
8.6.2 Semantics 47

Annex A (informative) IPMP DIDL Schema 48

Annex B (informative) IPMP Information Schema 51

Annex C (informative) IPMP General Information Schema 54

Annex D (informative) Processing IPMP DIDL Elements 55

Annex E (informative) Examples of IPMP DIDL Elements with IPMP Information 58
E.1 Example 1: Protecting an Item 58
E.2 Example 2: Protecting several Items in the same DIDL 59

Annex F (normative) List of Registration Authorities 61
F.1 Registered Data 61
F.2 Procedure for the request of Registered Data 61
F.3 Responsibilities of the Registration Authority 61
F.4 Contact information for the Registration Authority 62
F.5 Responsibilities of Parties Requesting Registered Data 62

© ISO/IEC 2006 – All rights reserved
Copyright International Organization for Standardization
Provided by IHS under license with ISO
No reproduction or networking permitted without license from IHS
Not for Resale

F.6 Appeal Procedure for Denied Applications 62
F.7 Registration Application Form 62
F.7.1 Contact Information of organization requesting a RID 62
F.7.2 Request for specific registered data 63
F.7.3 Short description of the Registered Data that is in use and date system was implemented 63
F.7.4 Statement of an intention to apply the assigned Registered Data 63
F.7.5 Date of intended implementation of the Registered Data 63
F.7.6 Authorized representative 63
F.7.7 For official use of the Registration Authority 64

Annex G (informative) **Example for protect resource fragment 65**

Annex H (informative) **IPMP Tool Updating Mechanism 67**

Bibliography 70

© ISO/IEC 2006 – All rights reserved

Copyright International Organization for Standardization
Provided by IHS under license with ISO
No reproduction or networking permitted without license from IHS
Not for Resale

Foreword

ISO (the International Organization for Standardization) and IEC (the International Electrotechnical Commission) form the specialized system for worldwide standardization. National bodies that are members of ISO or IEC participate in the development of International Standards through technical committees established by the respective organization to deal with particular fields of technical activity. ISO and IEC technical committees collaborate in fields of mutual interest. Other international organizations, governmental and non-governmental, in liaison with ISO and IEC, also take part in the work. In the field of information technology, ISO and IEC have established a joint technical committee, ISO/IEC JTC 1.

International Standards are drafted in accordance with the rules given in the ISO/IEC Directives, Part 2.

The main task of the joint technical committee is to prepare International Standards. Draft International Standards adopted by the joint technical committee are circulated to national bodies for voting. Publication as an International Standard requires approval by at least 75 % of the national bodies casting a vote.

Attention is drawn to the possibility that some of the elements of this document may be the subject of patent rights. ISO and IEC shall not be held responsible for identifying any or all such patent rights.

ISO/IEC 21000-4 was prepared by Joint Technical Committee ISO/IEC JTC 1, *Information technology*, Subcommittee SC 29, *Coding of audio, picture, multimedia and hypermedia information*.

ISO/IEC 21000 consists of the following parts, under the general title *Information technology — Multimedia framework (MPEG-21)*:

— *Part 1: Vision, Technologies and Strategy* [Technical Report]

— *Part 2: Digital Item Declaration*

— *Part 3: Digital Item Identification*

— *Part 4: Intellectual Property Management and Protection Components*

— *Part 5: Rights Expression Language*

— *Part 6: Rights Data Dictionary*

— *Part 7: Digital Item Adaptation*

— *Part 8: Reference Software*

— *Part 9: File Format*

— *Part 10: Digital Item Processing*

— *Part 11: Evaluation Tools for Persistent Association Technologies* [Technical Report]

— *Part 12: Test Bed for MPEG-21 Resource Delivery* [Technical Report]

— *Part 15: Event Reporting*

— *Part 16: Binary Format*

— *Part 17: Fragment Identification of MPEG Resources*

© ISO/IEC 2006 – All rights reserved
Copyright International Organization for Standardization
Provided by IHS under license with ISO
No reproduction or networking permitted without license from IHS
Not for Resale

The following parts are under preparation:

— *Part 14: Conformance Testing*

— *Part 18: Digital Item Streaming*

© ISO/IEC 2006 – All rights reserved

Copyright International Organization for Standardization
Provided by IHS under license with ISO
No reproduction or networking permitted without license from IHS
Not for Resale

Introduction

The appetite of end users for content and the accessibility of information is growing at an incredible pace. Access devices with a wide range of terminal and network capabilities are becoming an integral part of end users' lives; furthermore, these devices are used in different locations and environments. As yet, users are not sufficiently empowered with the necessary tools to deal efficiently with the intricacies of this new multimedia usage environment.

The enabling of "ease of use" is becoming increasingly important as individuals produce more and more digital media for personal use and for sharing among family and friends (as is evidenced by the large number of amateur music, photo and media sharing web sites). These amateur "content providers" have many of the same concerns as commercial content providers, including management of content, re-purposing of content based on consumer/device capabilities, protection of rights, protection from unauthorized access/modification, privacy protection for providers and consumers, etc.

Such developments provide new models for distributing and trading digital content electronically in addition to existing business models for trading physical goods. Such new business models mean that the boundaries between the delivery of audio sound (music and spoken word), accompanying artwork (graphics), text (lyrics), video (visual) and synthetic spaces will become increasingly blurred. Indeed, it is becoming more and more difficult to identify the different intellectual property rights that are associated with multimedia content. New solutions are required to manage the access and delivery process of these different content types in an integrated and harmonized way, entirely transparent to the user of multimedia services.

With this motivation, the ISO/IEC 21000 MPEG-21 Multimedia Framework aims to enable the transparent and augmented use of multimedia resources across a wide range of networks and devices. This fourth part of ISO/IEC 21000 aims to address the need for effective management and protection of intellectual property in the Multimedia Framework over heterogeneous access and delivery infrastructures. It specifies components for Intellectual Property Management and Protection (IPMP) applied to Digital Items (see ISO/IEC 21000-2) to facilitate the exchange of governed content between peers.

© ISO/IEC 2006 – All rights reserved
Copyright International Organization for Standardization
Provided by IHS under license with ISO
No reproduction or networking permitted without license from IHS
Not for Resale

Information technology — Multimedia framework (MPEG-21) —

Part 4:
Intellectual Property Management and Protection Components

1 Scope

This part of ISO/IEC 21000 specifies how to include IPMP information and protected parts of Digital Items in a DIDL document. It purposely does not specify protection measures, keys, key management, trust management, encryption algorithms, certification infrastructures or other components that would also be needed as part of a complete IPMP solution.

The IPMP DIDL encapsulates and protects a part of the hierarchy of a Digital Item, and associates appropriate identification and protection information with it. The description of IPMP governance and tools is required to satisfy IPMP for a Digital Item or its parts to be accessed.

2 Normative references

The following referenced documents are indispensable for the application of this document. For dated references, only the edition cited applies. For undated references, the latest edition of the referenced document (including any amendments) applies.

ISO/IEC 21000 (all parts), *Information technology — Multimedia framework (MPEG-21)*

W3C REC-xml-20040204, *Extensible Markup Language (XML) 1.0 (Third Edition)*, W3C Recommendation 4 February 2004, available at <http://www.w3.org/TR/2004/REC-xml-20040204>.

W3C REC-xmlschema-1-20041028, *XML Schema Part 1: Structures Second Edition*, W3C Recommendation 28 October 2004

W3C REC-xmlschema-2-20041028, *XML Schema Part 2: Datatypes Second Edition*, W3C Recommendation 28 October 2004

Canonical XML Version 1.0, W3C Recommendation, 15 March 2001

IETF RFC 3986, Uniform Resource Identifiers (URI): Generic Syntax, January 2005

IETF RFC 2616, *Hypertext Transfer Protocol — HTTP/1.1*, IETF Request for Comments: 2616, June 1999

XMLDSIG, XML-Signature Syntax and Processing, W3C Recommendation, 12 February 2002, available at <http://www.w3.org/TR/2002/REC-xmldsig-core-20020212>.

© ISO/IEC 2006 – All rights reserved

Copyright International Organization for Standardization
Provided by IHS under license with ISO
No reproduction or networking permitted without license from IHS
Not for Resale

3 Terms and definitions, symbols, abbreviated terms

3.1 Terms and definitions

For the purposes of this part of ISO/IEC 21000, the following terms and definitions apply.

3.1.1
contents
part of the hierarchy of a Digital Item, which may be an embedded resource or a section of the DIDL structure itself, which may be governed and subject to protection

3.1.2
protection
technical measures for the preservation of confidentiality, integrity and/or availability

3.1.3
governance
specification of and compliance with constraints imposed by a user on creation, distribution, processing and other actions on Digital Items (including its parts: DID, resources and metadata)

3.1.4
representation
specification of normative syntax and semantics of XML elements and attributes representing the entities of the DID Model, providing for the expression of a Digital Item in XML

3.1.5
peer
device or application that compliantly process SPS a Digital Item

[ISO/IEC 21000-1:2004]

NOTE A peer is a device or application that compliantly processes a Digital Item.

3.1.6
license rights expression
expression that is created by principals to conditionally or unconditionally permit the same or other principals to perform rights upon resources

[ISO/IEC 21000-5:2004]

3.1.7
principal
system entity defined by an r: principal

[ISO/IEC 21000-5:2004]

3.1.8
conditionally
in a manner subject to a condition

[ISO/IEC 21000-5:2004]

3.1.9
unconditionally
unconditionally as defined in ISO/IEC 21000-5 in a manner not subject to a condition

[ISO/IEC 21000-5:2004]

© ISO/IEC 2006 – All rights reserved
Copyright International Organization for Standardization
Provided by IHS under license with ISO
No reproduction or networking permitted without license from IHS
Not for Resale

3.1.10
clear
in an unprotected form (see 3.1.13)

3.1.11
governed
subject to governance (see 3.1.3)

3.1.12
protected
subject to protection (see 3.1.2)

3.1.13
ungoverned
not subject to governance (see 3.1.3)

3.1.14
unprotect
the authorized removal of protection (see 3.1.2)

3.1.15
unprotected
not subject to protection (see 3.1.2)

3.2 Symbols and abbreviated terms

For the purposes of this part of ISO/IEC 21000, the following symbols and abbreviated terms apply.

3.2.1
DI
Digital Item

3.2.2
DID
Digital Item Declaration [ISO/IEC 21000-2]

3.2.3
DIDL
Digital Item Declaration Language [ISO/IEC 21000-2]

3.2.4
DII
Digital Item Identification [ISO/IEC 21000-3]

3.2.5
IPMP
Intellectual Property Management and Protection

3.2.6
MPEG
Moving Picture Experts Group

3.2.7
MIME
Multipurpose Internet Mail Extensions

3.2.8
RDD
Rights Data Dictionary [ISO/IEC 21000-6]

© ISO/IEC 2006 – All rights reserved

Copyright International Organization for Standardization
Provided by IHS under license with ISO
No reproduction or networking permitted without license from IHS
Not for Resale

3.2.9
REL
Rights Expression Language [ISO/IEC 21000-5]

3.2.10
URI
Uniform Resource Identifier [IETF RFC 3986]

3.2.11
URL
Uniform Resource Locator [IETF RFC 3986]

3.2.12
XML
Extensible Markup Language [W3C REC-xml-20040204]

4 IPMP Components Overview

4.1 Organization of the specification

This part of ISO/IEC 21000 describes the IPMP Components of the ISO/IEC 21000 standard. In sequence, each component is described by the following subclauses:

— Syntax: Normative XML specification of the tool.

— Semantic: Normative definition of the semantics of all the components of the corresponding tool.

— Informative examples: Optionally, an informative subclause giving examples of description.

4.2 Overview of IPMP Components

The aim of ISO/IEC 21000-4 Intellectual Property Management and Protection (IPMP) Components is to allow controls on the flow and usage of Digital Items throughout their lifecycle.

It exists in two parts:

— IPMP Digital Item Declaration Language, which provides for a protected Representation of the DID model, allowing DID hierarchy which is encrypted, digitally signed or otherwise governed to be included in a DID document in a schematically valid manner.

These are covered in clauses;

- IPMP Digital Item Declaration Language Overview (clause 5),
- IPMP Digital Item Declaration Representation (clause 6), and
- **(informative)**

  Processing IPMP DIDL Elements (Annex D)

of this part of ISO/IEC 21000.

— IPMP Information schemas, defining structures for expressing information relating to the protection of content, including tools, mechanisms and licenses. The IPMP information part specified in ISO/IEC 21000-4 is flexible enough to signal protection information for the digital media which is NOT declared by DIDL model as well.

--`,,```,,,,````-`-`,,`,,`,`,,`---

© ISO/IEC 2006 – All rights reserved
Copyright International Organization for Standardization
Provided by IHS under license with ISO
No reproduction or networking permitted without license from IHS
Not for Resale

These are covered in clauses;

- IPMP Information Descriptor (clause 7), and
- IPMP General Information Descriptor (clause 8)

of this part of ISO/IEC 21000.

4.3 Relationship between IPMP Components and other parts of ISO/IEC 21000

4.3.1 Introduction

The fundamental unit of transfer in the MPEG-21 Multimedia Framework is the Digital Item. The parts of ISO/IEC 21000 deal with different aspects of Digital Items, and together facilitate the complete MPEG-21 Multimedia Framework. It is therefore crucial to understand the relationship between the parts to be able to achieve an interoperable framework. The following subclauses describe the relation between IPMP Components and the other parts of ISO/IEC 21000.

4.3.2 Relationship between IPMP Components and ISO/IEC 21000-2 Digital Item Declaration

The Digital Item Declaration (DID) specification (ISO/IEC 21000-2) defines entities in the DID model, which are used to unambiguously express the structure and content of a Digital Item in the MPEG-21 Multimedia Framework. The Digital Item Declaration Language (DIDL) provides a normative Representation for Digital Items using XML, defined by DIDL elements and attributes which correspond to entities in the DID model.

As a Digital Item expressed in DIDL is a clear XML document, the Contents of a Digital Item represented entirely in DIDL are exposed. IPMP Components provides an alternative normative Representation for parts of Digital Items that require protection through IPMP governance. This Representation is termed the IPMP Digital Item Declaration Language (IPMP DIDL), and defines governed XML elements corresponding to entities in the DID model. Each of these IPMP DIDL elements is intended to link a corresponding DIDL element (which may be encrypted) with information about the governance, so that the Digital Item or part of Digital Item thus represented is used in accordance with the Digital Item author's wishes.

4.3.3 Relationship between IPMP Components and ISO/IEC 21000-3 Digital Item Identification

ISO/IEC 21000-3 (DII) specifies the syntax and semantics of identifiers that can be associated with Digital Items and parts thereof, by inclusion in a specific place within the Digital Item structure. Since the use of IPMP DIDL to govern parts of Digital Item may hide, or prevent access to identifiers located within that hierarchy, IPMP DIDL specifies a location for such DII identifiers to be placed when the IPMP-governed hierarchy itself must be identifiable (for example, from an REL License that references the governed content).

4.3.4 Relationship between IPMP Components and ISO/IEC 21000-5 Rights Expression Language

ISO/IEC 21000-5 (REL) specifies the syntax and semantics of a Rights Expression Language, which expresses the rights a User may have to act on assets, such as Digital Items or parts thereof. One important concept in REL is the License. A License is defined as an expression that is created by Principals to Conditionally or Unconditionally permit the same or other Principals to perform Rights upon resources.

IPMP defines how rights expressions, protected or unprotected, can be unambiguously associated with their target. In particular, rights expressions can be associated to Digital Items in four different ways. They can:

- Be included in a Digital Item
- Be referenced from within a Digital Item
- Be referenced from within a Digital Item via a license service
- Reference the Digital Item from the rights expression

IPMP also defines how to specify the location from which applicable licenses can be retrieved and the method or process for acquiring them.

© ISO/IEC 2006 – All rights reserved

Copyright International Organization for Standardization
Provided by IHS under license with ISO
No reproduction or networking permitted without license from IHS
Not for Resale

4.3.5 Relationship between IPMP Components and ISO/IEC 21000-7 Digital Item Adaptation

The Digital Item Adaptation specification (ISO/IEC 21000-7) specifies metadata that is used to guide the adaptation of Digital Items and their component resources. While ISO/IEC 21000-5 and ISO/IEC 21000-6 provide tools to permit playing, modifying, and adapting Digital Items and their component resources with coarse control, ISO/IEC 21000-7 provides tools for use with ISO/IEC 21000-5 to enable finer-grained control over the changes that can occur. Since it is the aim of IPMP Components to allow control on the flow and usage of Digital Items throughout their lifecycle, it is important to maintain the integrity of this metadata and ensure that it is not tampered with. Furthermore, ISO/IEC 21000-7 also specifies potentially sensitive metadata that is used to personalize Digital Items for particular Users, including end-user information and preferences. The protection of such metadata contained within a Digital Item is also achieved by the IPMP Components specification.

4.4 Namespaces and conventions

4.4.1 Namespaces

The IPMP DIDL namespace shall be `urn:mpeg:mpeg21:2004:01-IPMPDIDL-NS`. The IPMP Information Descriptor and General Information Descriptor namespace shall be `urn:mpeg:mpeg21:2004:01-IPMPINFO-NS`.

4.4.2 Namespace conventions

Throughout this part of ISO/IEC 21000, Qualified Names are written with a namespace prefix followed by a colon followed by the local part of the Qualified Name.

For clarity, throughout this part of ISO/IEC 21000, consistent namespace prefixes are used. Table 1 gives these prefixes and the corresponding namespace.

Table 1 — Mapping of prefixes to namespaces in examples and text

Prefix	Corresponding namespace
ipmpdidl	urn:mpeg:mpeg21:2004:01-IPMPDIDL-NS
ipmpinfo	urn:mpeg:mpeg21:2004:01-IPMPINFO-NS
didl	urn:mpeg:mpeg21:2002:02-DIDL-NS
didmodel	urn:mpeg:mpeg21:2002:02-DIDMODEL-NS
dii	urn:mpeg:mpeg21:2002:01-DII-NS
r	urn:mpeg:mpeg21:2003:01-REL-R-NS
xsd	http://www.w3.org/2001/XMLSchema
xsi	http://www.w3.org/2001/XMLSchema-instance
dsig	http://www.w3.org/2000/09/xmldsig#

5 IPMP Digital Item Declaration Language Overview

5.1 Introduction

As defined in ISO/IEC 21000-2, Digital Item Declarations are XML 1.0 documents. The reader is assumed to be familiar with the terms and concepts of XML 1.0.

The communication of IPMP governance on a part of the hierarchy of a Digital Item (including the entirety of it) is achieved by the use of IPMP Digital Item Description Language (IPMP DIDL), a Representation of the Digital Item Description (DID) model defined in ISO/IEC 21000-2. The purpose of this clause is to describe the

© ISO/IEC 2006 – All rights reserved
Copyright International Organization for Standardization
Provided by IHS under license with ISO
No reproduction or networking permitted without license from IHS
Not for Resale

syntax and semantics of the W3C XML representation for declaring governed Digital Items. The IPMP DIDL encapsulates and protects a part of the hierarchy of a Digital Item, and associates appropriate identification and protection information with it. The syntax is defined using XML schema (as specified in W3C XMLSCHEMA). For the purposes of this document, the XML schema syntax descriptions are also collectively referred to as IPMP DIDL schema.

IPMP DIDL elements are part of the namespace URI defined as "`urn:mpeg:mpeg21:2004:01-IPMPDIDL-NS`". The "01" represents a serial number that is expected to change as the IPMP DIDL schema evolves along with this part of ISO/IEC 21000.

Note: In this part of ISO/IEC 21000, `ipmpdidl` is used as the namespace prefix associated with the IPMP DIDL namespace.

5.2 Schema wrapper

The syntax of description tools specified in clause 6 is provided as a collection of schema components, consisting notably in type definitions and element declarations. In order to form a valid schema document, these schema components should be gathered in a schema document with the following declaration defining in particular the target namespace and the namespaces prefixes.

```
<?xml version="1.0"?>
<!--=========================================-->
<!--=====Schema for IPMP DIDL Types========-->
<!--=========================================-->
<schema targetNamespace="urn:mpeg:mpeg21:2004:01-IPMPDIDL-NS" elementFormDefault="qualified"
    attributeFormDefault="unqualified" version="0.01" xmlns="http://www.w3.org/2001/XMLSchema"
    xmlns:didmodel="urn:mpeg:mpeg21:2002:02-DIDMODEL-NS" xmlns:ipmpdidl="urn:mpeg:mpeg21:2004:01-
IPMPDIDL-NS">
    <import schemaLocation="didmodel.xsd" namespace="urn:mpeg:mpeg21:2002:02-DIDMODEL-NS"/>
    <import schemaLocation="didl.xsd" namespace="urn:mpeg:mpeg21:2002:02-DIDL-NS"/>
```

Additionally, the following line should be appended to the resulting schema document in order to obtain a well-formed XML document.

```
</schema>
```

6 IPMP Digital Item Declaration Representation

6.1 Introduction

For each entity in the DID model, an IPMP DIDL element is provided as a protected Representation of that entity, derived from the abstract DID model types as defined in the DID model schema in ISO/IEC 21000-2. The relationship between the schemas for IPMP DIDL, DIDL and the DID model is shown below.

© ISO/IEC 2006 – All rights reserved

Copyright International Organization for Standardization
Provided by IHS under license with ISO
No reproduction or networking permitted without license from IHS
Not for Resale

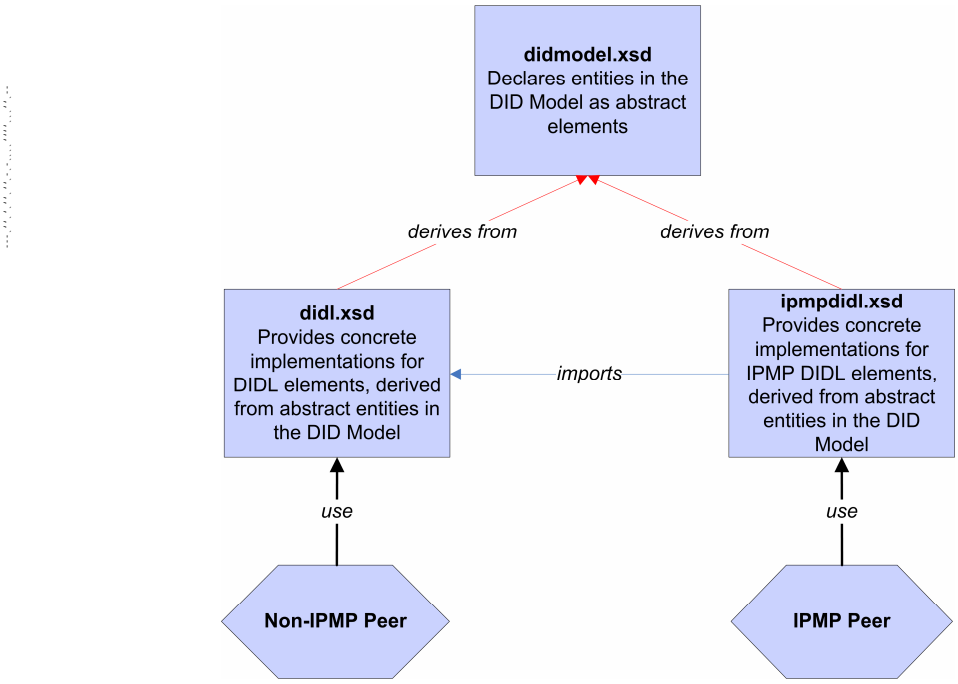

Figure 1 — Schema relationship between DID model, DIDL and IPMP DIDL

As both IPMP DIDL elements and DIDL elements extend abstract types defined for the DID model, they are interchangeable within a Digital Item Declaration. As the IPMP DIDL schema imports the DIDL schema as defined in ISO/IEC 21000-2, all documents conforming to the DIDL schema are also conformant to the IPMP DIDL schema.

6.2 IPMP DIDL elements for the DID model

Each of the IPMP DIDL elements below represents the corresponding entity in the DID model, and corresponds to an element defined in the DIDL Representation as defined in ISO/IEC 21000-2 DID. Each of the following IPMP DIDL elements has the same semantics as its DIDL counterpart.

- <ipmpdidl:Container>
- <ipmpdidl:Item>
- <ipmpdidl:Descriptor>
- <ipmpdidl:Statement>
- <ipmpdidl:Component>
- <ipmpdidl:Anchor>
- <ipmpdidl:Fragment>
- <ipmpdidl:Condition>
- <ipmpdidl:Choice>
- <ipmpdidl:Selection>
- <ipmpdidl:Resource>
- <ipmpdidl:Annotation>
- <ipmpdidl:Assertion>

Each of the IPMP DIDL elements above contains identical structure.

(i) a maximum of one ipmpdidl:Identifier element, into which an appropriate identifier for the protected Representation may be placed
(ii) one ipmpdidl:Info element, into which information about the governance is placed
(iii) a maximum of one ipmpdidl:ContentInfo element, into which information about the governed Contents is placed
(iv) one ipmpdidl:Contents element, into which the governed Contents is placed

Copyright International Organization for Standardization
Provided by IHS under license with ISO
No reproduction or networking permitted without license from IHS
© ISO/IEC 2006 – All rights reserved
Not for Resale

This structure is shown below.

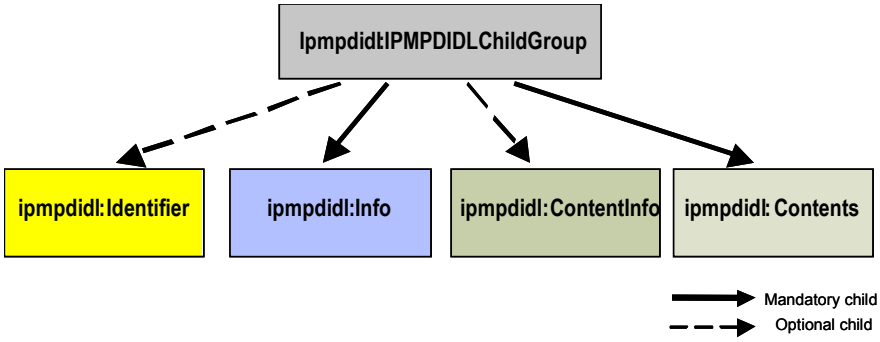

Figure 2 — Structure of IPMP DIDL elements for the DID model

For simplicity, these child elements are grouped into the following XML Schema group and referred to from the definition of each element.

```
<group name="IPMPDIDLChildGroup">
    <sequence>
        <element ref="ipmpdidl:Identifier" minOccurs="0"/>
        <element ref="ipmpdidl:Info"/>
        <element ref="ipmpdidl:ContentInfo" minOccurs="0"/>
        <element ref="ipmpdidl:Contents"/>
    </sequence>
</group>
```

6.2.1 ipmpdidl:Container

6.2.1.1 Syntax

Diagram	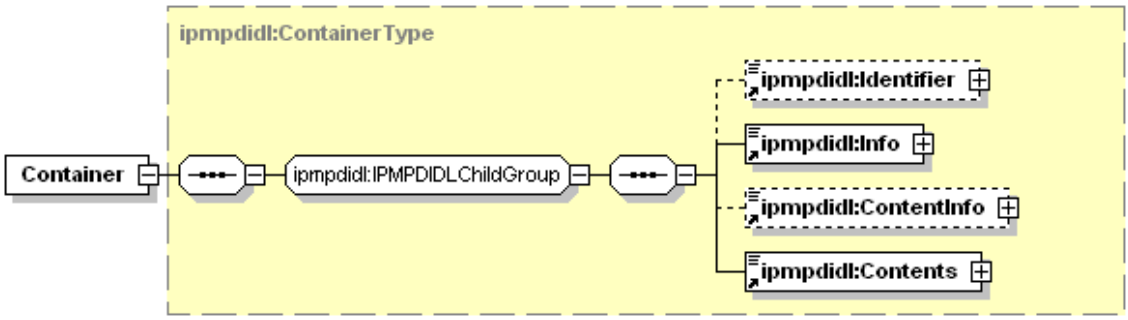
Children	<Identifier> <Info> <ContentInfo> <Contents>
Source	<element name="Container" type="ipmpdidl:ContainerType" substitutionGroup="didmodel:Container"/> <complexType name="ContainerType"> <complexContent> <extension base="didmodel:ContainerType"> <sequence> <group ref="ipmpdidl:IPMPDIDLChildGroup"/> </sequence> </extension> </complexContent> </complexType>

© ISO/IEC 2006 – All rights reserved

Copyright International Organization for Standardization
Provided by IHS under license with ISO
No reproduction or networking permitted without license from IHS
Not for Resale

6.2.1.2 Semantics

The ipmpdidl:Container element is defined to provide for the communication of IPMP governance on a specific Container originally represented in DIDL.

6.2.2 ipmpdidl:Item

6.2.2.1 Syntax

Diagram	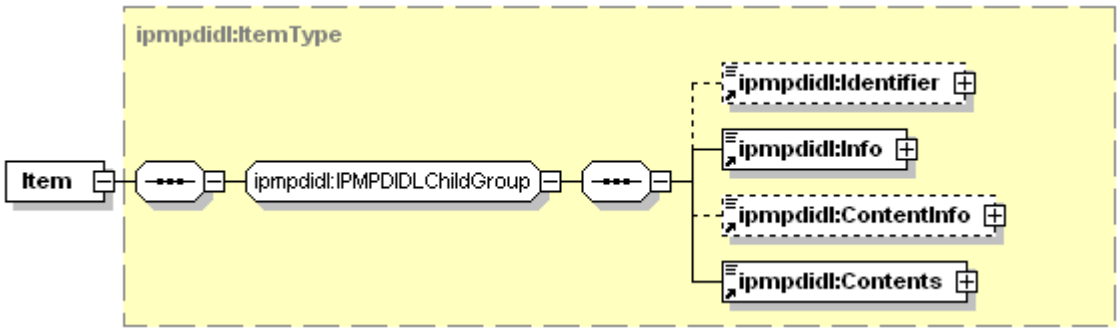
Children	<Identifier> <Info> <ContentInfo> <Contents>
Source	<element name="Item" type="ipmpdidl:ItemType" substitutionGroup="didmodel:Item"/> <complexType name="ItemType"> <complexContent> <extension base="didmodel:ItemType"> <sequence> <group ref="ipmpdidl:IPMPDIDLChildGroup"/> </sequence> </extension> </complexContent> </complexType>

6.2.2.2 Semantics

The ipmpdidl:Item element is defined to provide for the communication of IPMP governance on a specific Item originally represented in DIDL.

6.2.3 ipmpdidl:Descriptor

6.2.3.1 Syntax

Diagram	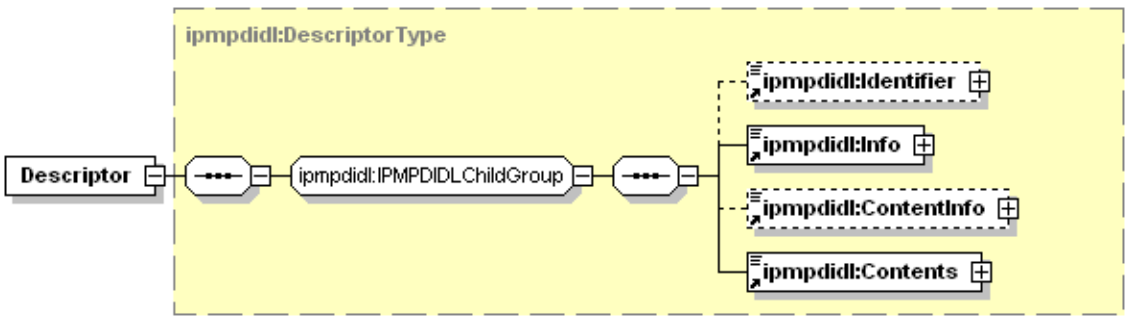
Children	<Identifier> <Info> <ContentInfo> <Contents>
Source	<element name="Descriptor" type="ipmpdidl:DescriptorType" substitutionGroup="didmodel:Descriptor"/> <complexType name="DescriptorType"> <complexContent>

© ISO/IEC 2006 – All rights reserved
Copyright International Organization for Standardization
Provided by IHS under license with ISO
No reproduction or networking permitted without license from IHS
Not for Resale

	<extension base="didmodel:DescriptorType"> <sequence> <group ref="ipmpdidl:IPMPDIDLChildGroup"/> </sequence> </extension> </complexContent> </complexType>

6.2.3.2 Semantics

The ipmpdidl:Descriptor element is defined to provide for the communication of IPMP governance on a specific Descriptor originally represented in DIDL.

6.2.4 ipmpdidl:Statement

6.2.4.1 Syntax

Diagram	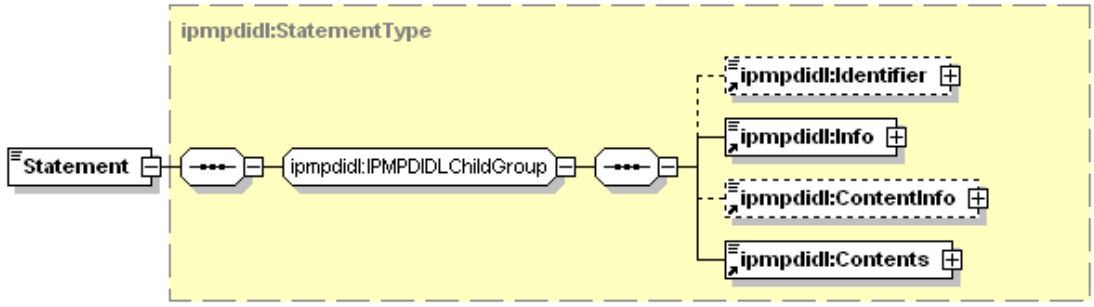
Children	<Identifier> <Info> <ContentInfo> <Contents>
Source	<element name="Statement" type="ipmpdidl:StatementType" substitutionGroup="didmodel:Statement"/> <complexType name="StatementType"> <complexContent> <extension base="didmodel:StatementType"> <sequence> <group ref="ipmpdidl:IPMPDIDLChildGroup"/> </sequence> </extension> </complexContent> </complexType>

6.2.4.2 Semantics

The ipmpdidl:Statement element is defined to provide for the communication of IPMP governance on a specific Statement originally represented in DIDL.

--`,,```,,,,````-`-`,,`,,`,`,,`---

© ISO/IEC 2006 – All rights reserved

Copyright International Organization for Standardization
Provided by IHS under license with ISO
No reproduction or networking permitted without license from IHS
Not for Resale

6.2.5 ipmpdidl:Component

6.2.5.1 Syntax

Diagram	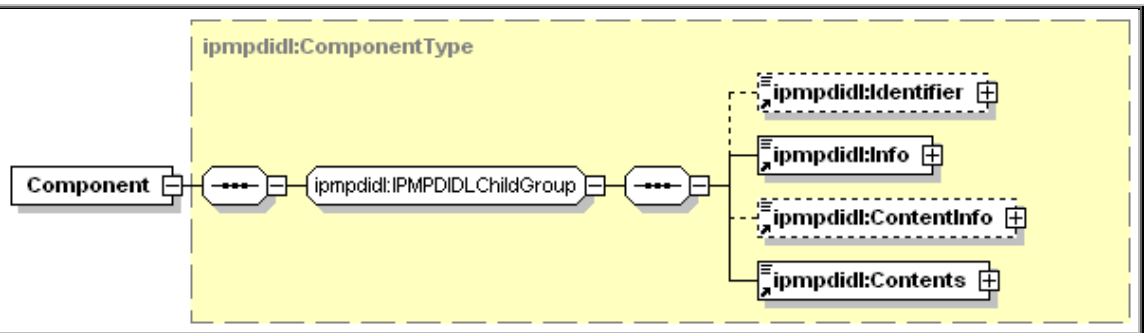
Children	<Identifier> <Info> <ContentInfo> <Contents>
Source	<element name="Component" type="ipmpdidl:ComponentType" substitutionGroup="didmodel:Component"/> <complexType name="ComponentType"> <complexContent> <extension base="didmodel:ComponentType"> <sequence> <group ref="ipmpdidl:IPMPDIDLChildGroup"/> </sequence> </extension> </complexContent> </complexType>

6.2.5.2 Semantics

The ipmpdidl:Component element is defined to provide for the communication of IPMP governance on a specific Component originally represented in DIDL.

6.2.6 ipmpdidl:Anchor

6.2.6.1 Syntax

Diagram	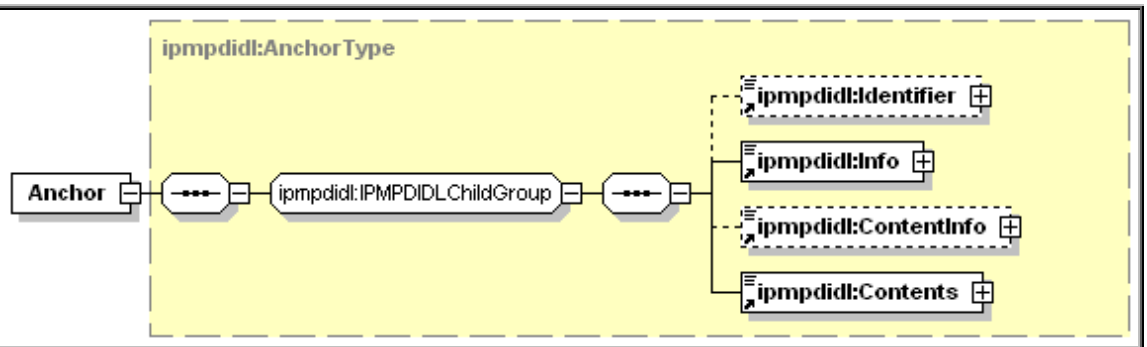
Children	<Identifier> <Info> <ContentInfo> <Contents>
Source	<element name="Anchor" type="ipmpdidl:AnchorType" substitutionGroup="didmodel:Anchor"/> <complexType name="AnchorType"> <complexContent> <extension base="didmodel:AnchorType"> <sequence> <group ref="ipmpdidl:IPMPDIDLChildGroup"/> </sequence>

© ISO/IEC 2006 – All rights reserved
Copyright International Organization for Standardization
Provided by IHS under license with ISO
No reproduction or networking permitted without license from IHS
Not for Resale

	</extension> </complexContent> </complexType>

6.2.6.2 Semantics

The ipmpdidl:Anchor element is defined to provide for the communication of IPMP governance on a specific Anchor originally represented in DIDL.

6.2.7 ipmpdidl:Fragment

6.2.7.1 Syntax

Diagram	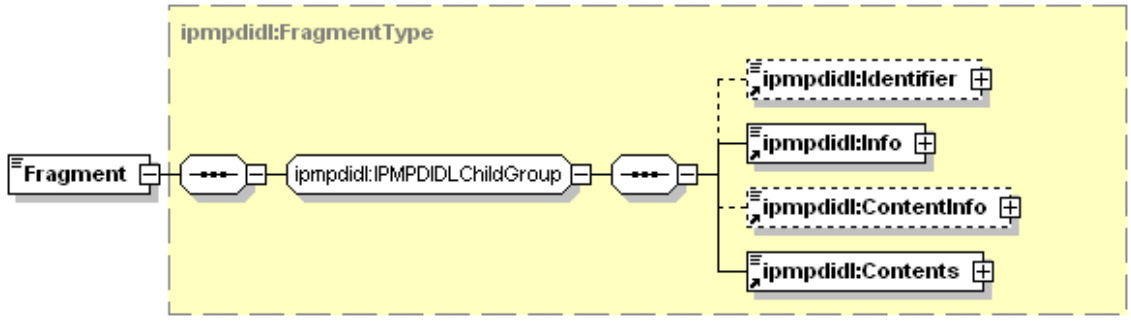
Children	<Identifier> <Info> <ContentInfo> <Contents>
Source	<element name="Fragment" type="ipmpdidl:FragmentType" substitutionGroup="didmodel:Fragment"/> <complexType name="FragmentType"> <complexContent> <extension base="didmodel:FragmentType"> <sequence> <group ref="ipmpdidl:IPMPDIDLChildGroup"/> </sequence> </extension> </complexContent> </complexType>

6.2.7.2 Semantics

The ipmpdidl:Fragment element is defined to provide for the communication of IPMP governance on a specific Fragment originally represented in DIDL. The fragment location where IPMP governance applies is described by the fragmentID attribute of the didlmodel:Fragment. The semantics of the fragmentID attribute is as defined in ISO/IEC 21000-17. The example of using ipmpdidl:Fragment is shown in Annex G.

© ISO/IEC 2006 – All rights reserved
Copyright International Organization for Standardization
Provided by IHS under license with ISO
No reproduction or networking permitted without license from IHS
Not for Resale

6.2.8 ipmpdidl:Condition

6.2.8.1 Syntax

Diagram	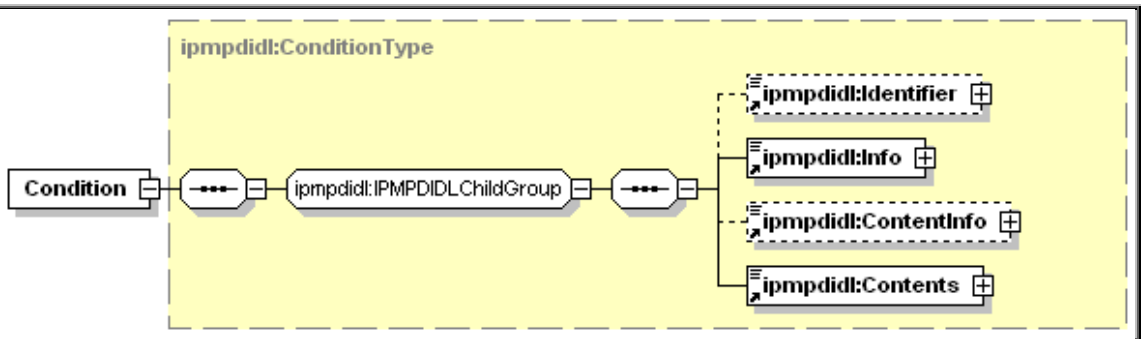
Children	<Identifier> <Info> <ContentInfo> <Contents>
Source	<element name="Condition" type="ipmpdidl:ConditionType" substitutionGroup="didmodel:Condition"/> <complexType name="ConditionType"> <complexContent> <extension base="didmodel:ConditionType"> <sequence> <group ref="ipmpdidl:IPMPDIDLChildGroup"/> </sequence> </extension> </complexContent> </complexType>

6.2.8.2 Semantics

The ipmpdidl:Condition element is defined to provide for the communication of IPMP governance on a specific Condition originally represented in DIDL.

6.2.9 ipmpdidl:Choice

6.2.9.1 Syntax

Diagram	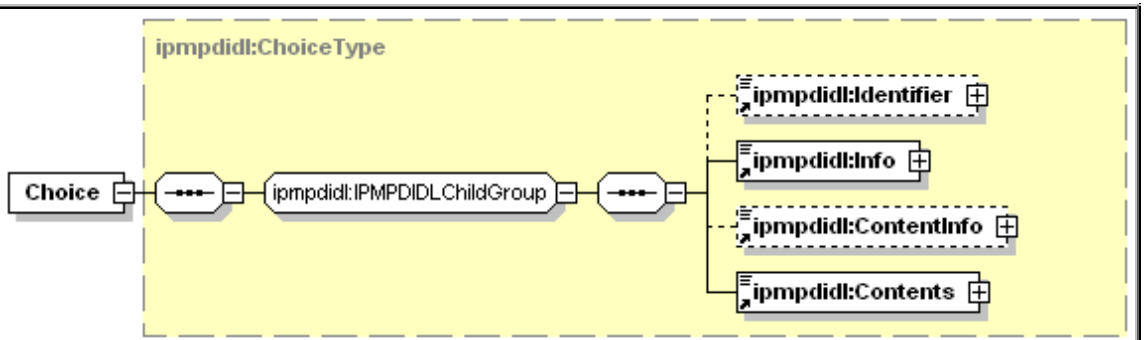
Children	<Identifier> <Info> <ContentInfo> <Contents>
Source	<element name="Choice" type="ipmpdidl:ChoiceType" substitutionGroup="didmodel:Choice"/> <complexType name="ChoiceType"> <complexContent> <extension base="didmodel:ChoiceType"> <sequence> <group ref="ipmpdidl:IPMPDIDLChildGroup"/> </sequence>

© ISO/IEC 2006 – All rights reserved
Copyright International Organization for Standardization
Provided by IHS under license with ISO
No reproduction or networking permitted without license from IHS
Not for Resale

	</extension> </complexContent> </complexType>

6.2.9.2 Semantics

The ipmpdidl:Choice element is defined to provide for the communication of IPMP governance on a specific Choice originally represented in DIDL.

6.2.10 ipmpdidl:Selection

6.2.10.1 Syntax

Diagram	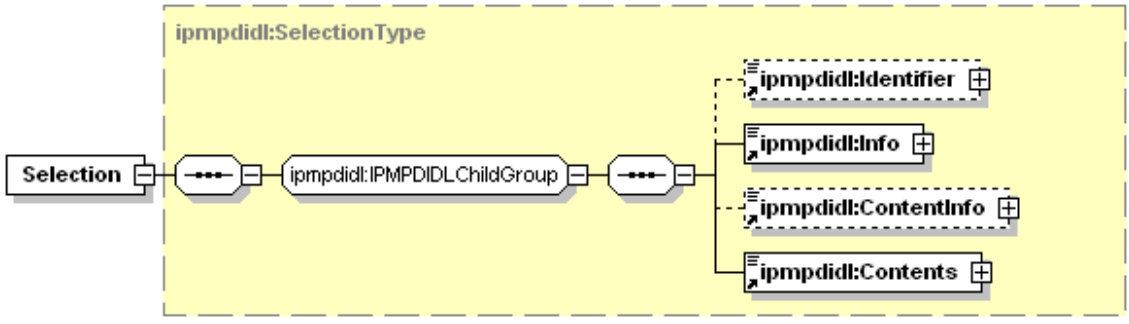
Children	<Identifier> <Info> <ContentInfo> <Contents>
Source	<element name="Selection" type="ipmpdidl:SelectionType" substitutionGroup="didmodel:Selection"/> <complexType name="SelectionType"> <complexContent> <extension base="didmodel:SelectionType"> <sequence> <group ref="ipmpdidl:IPMPDIDLChildGroup"/> </sequence> </extension> </complexContent> </complexType>

6.2.10.2 Semantics

The ipmpdidl:Selection element is defined to provide for the communication of IPMP governance on a specific Selection originally represented in DIDL.

© ISO/IEC 2006 – All rights reserved
Copyright International Organization for Standardization
Provided by IHS under license with ISO
No reproduction or networking permitted without license from IHS
Not for Resale

6.2.11 ipmpdidl:Resource

6.2.11.1 Syntax

Diagram	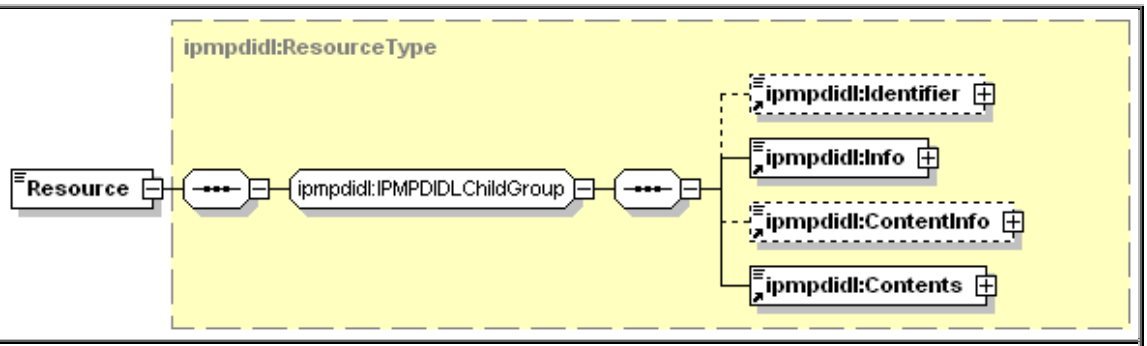
Children	<Identifier> <Info> <ContentInfo> <Contents>
Source	<element name="Resource" type="ipmpdidl:ResourceType" substitutionGroup="didmodel:Resource"/> <complexType name="ResourceType"> <complexContent> <extension base="didmodel:ResourceType"> <sequence> <group ref="ipmpdidl:IPMPDIDLChildGroup"/> </sequence> </extension> </complexContent> </complexType>

6.2.11.2 Semantics

The ipmpdidl:Resource element is defined to provide for the communication of IPMP governance on a specific Resource originally represented in DIDL.

6.2.12 ipmpdidl:Annotation

6.2.12.1 Syntax

Diagram	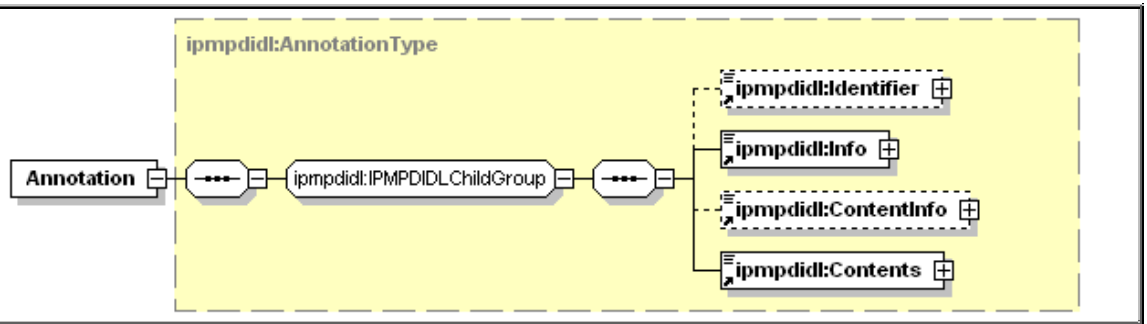
Children	<Identifier> <Info> <ContentInfo> <Contents>
Source	<element name="Annotation" type="ipmpdidl:AnnotationType" substitutionGroup="didmodel:Annotation"/> <complexType name="AnnotationType"> <complexContent> <extension base="didmodel:AnnotationType"> <sequence> <group ref="ipmpdidl:IPMPDIDLChildGroup"/> </sequence> </extension>

© ISO/IEC 2006 – All rights reserved
Copyright International Organization for Standardization
Provided by IHS under license with ISO
No reproduction or networking permitted without license from IHS
Not for Resale

	</complexContent> </complexType>

6.2.12.2 Semantics

The ipmpdidl:Annotation element is defined to provide for the communication of IPMP governance on a specific Annotation originally represented in DIDL.

6.2.13 ipmpdidl:Assertion

6.2.13.1 Syntax

Diagram	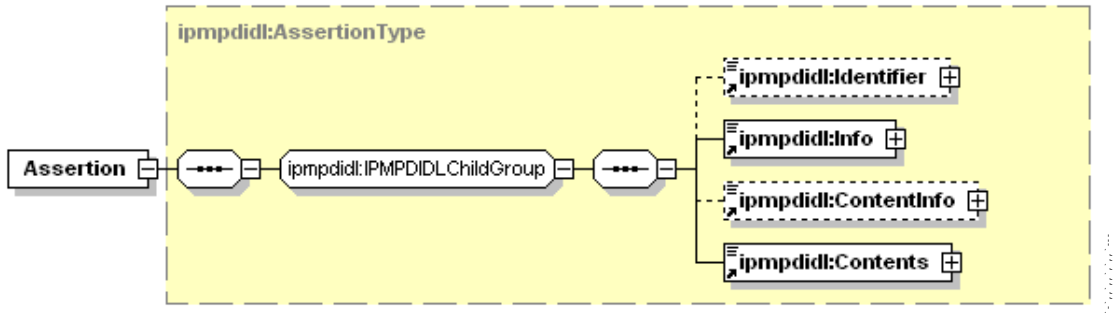
Children	<Identifier> <Info> <ContentInfo> <Contents>
Source	<element name="Assertion" type="ipmpdidl:AssertionType" substitutionGroup="didmodel:Assertion"/> <complexType name="AssertionType"> <complexContent> <extension base="didmodel:AssertionType"> <sequence> <group ref="ipmpdidl:IPMPDIDLChildGroup"/> </sequence> </extension> </complexContent> </complexType>

6.2.13.2 Semantics

The ipmpdidl:Assertion element is defined to provide for the communication of IPMP governance on a specific Assertion originally represented in DIDL.

© ISO/IEC 2006 – All rights reserved
Copyright International Organization for Standardization
Provided by IHS under license with ISO
No reproduction or networking permitted without license from IHS
Not for Resale

6.3 IPMP DIDL Elements particular to the IPMP DIDL Representation

6.3.1 ipmpdidl:ProtectedAsset

6.3.1.1 Syntax

<table>
<tr><td>Diagram</td><td colspan="4"> 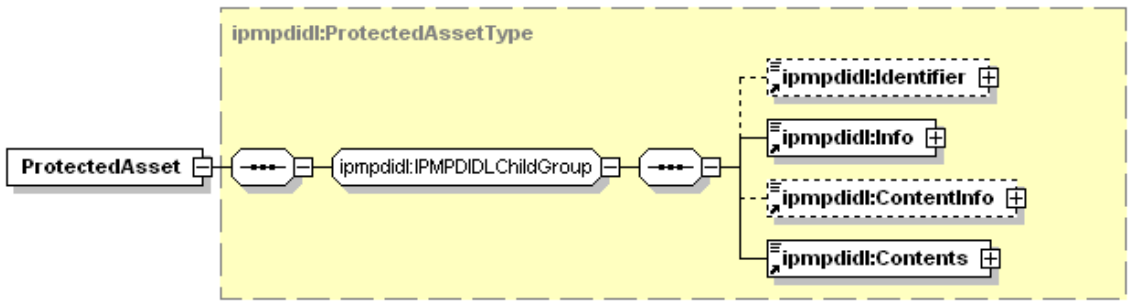
</td></tr>
<tr><td>Children</td><td colspan="4"><Identifier> <Info> <ContentInfo> <Contents></td></tr>
<tr><td rowspan="3">Attributes</td><td>Name</td><td>Type</td><td>Use</td><td>Semantics</td></tr>
<tr><td>mimeType</td><td>String</td><td>Required</td><td>The MIME Type of the protected asset.</td></tr>
<tr><td>contentEncoding</td><td>NMTOKENS</td><td>Optional</td><td>Specifies the content-encoding(s) as defined in IETF RFC 2616. A content-encoding value is used as a modifier to the MIME media-type. When present, its value indicates what additional content-encodings have been applied to the protected asset.</td></tr>
<tr><td>Source</td><td colspan="4"><element name="ProtectedAsset" type="ipmpdidl:ProtectedAssetType"/>
<complexType name="ProtectedAssetType">
<sequence>
<group ref="ipmpdidl:IPMPDIDLChildGroup"/>
</sequence>
<attribute name="mimeType" type="string" use="required"/>
<attribute name="contentEncoding" type="string"/>
</complexType></td></tr>
</table>

6.3.1.2 Semantics

The ipmpdidl:ProtectedAsset element is defined to provide for the communication of IPMP governance on a specific asset – i.e. content referred from or included inline to, didl:Resource. The mimeType attribute defines the mimeType of the protected Contents (asset) when in its unprotected state. The contentEncoding attribute defines a modifier to MIME media-type of the protected Contents (asset) when in its unprotected state.

The ipmpdidl:ProtectedAsset element may be included inline under a parent didl:Resource element. The mimeType of the Resource is “application/mp21-ipmp” to reflect the inclusion of IPMPDIDL structure.

NOTE The parent didl:Resource element represents the ipmpdidl:ProtectedAsset element as a resource. Hence the attributes of the didl:Resource apply to the ipmpdidl:ProtectedAsset element itself. For example the value of "application/mp21-ipmp" for the mimeType attribute of the didl:Resource applies to the ipmpdidl:ProtectedAsset element. Similarly the encoding and contentEncoding attributes of the didl:Resource element apply to the ipmpdidl:ProtectedAsset element itself.

When a metadata description included in a didl:Statement element is considered an asset and protected, the ipmpdidl:ProtectedAsset element may also be included inline under a parent didl:Statement element.

© ISO/IEC 2006 – All rights reserved
Copyright International Organization for Standardization
Provided by IHS under license with ISO
No reproduction or networking permitted without license from IHS
Not for Resale

6.3.1.3 Example

An informative example showing the use of the ipmpdidl:ProtectedAsset element is shown below.

```
<Component>
 <!--Asset protected, referenced externally-->
  <Resource mimeType="application/mp21-ipmp">
   <ipmpdidl:ProtectedAsset mimeType="video/mpeg">
   <ipmpdidl:Info>...</ipmpdidl:Info>
   <ipmpdidl:Contents ref="myserver.com/asset.mpgencoded"/>
   </ipmpdidl:ProtectedAsset>
  </Resource>
 </Component>
```

6.3.2 ipmpdidl:Identifier

6.3.2.1 Syntax

Diagram	
Used by	
Source	<element name="Identifier"> <complexType mixed="true"> <sequence> <any namespace="##any" processContents="lax" minOccurs="0"/> </sequence> </complexType> </element>

6.3.2.2 Semantics

This element acts as a placeholder for an Identifier from an appropriate namespace, to be associated with the protected Representation of the Contents. This Identifier will be referred from other structures referring to the protected contents as the use of the protected Representation makes access to any identifier within the Contents impossible.

NOTE If an application does not understand the identifier then it might not be able to use it. For example, all of the following could be valid examples of ipmpdidl:Identifier elements:

<ipmpdidl:Identifier>1234</ipmpdidl:Identifier>

<ipmpdidl:Identifier>urn:foo:bar:1234</ipmpdidl:Identifier>

<ipmpdidl:Identifier><foo:bar>1234</foo:bar></ipmpdidl:Identifier>

<ipmpdidl:Identifier>some text <foo:bar>1234</foo:bar> more text</ipmpdidl:Identifier>

<ipmpdidl:Identifier><dii:Identifier>urn:foo:bar:12345</dii:Identifier></ipmpdidl:Identifier>

If the value of the ippdidl:Identifier element does not contain an indication of the type of identifier and how to interpret it, then an application might not be able to utilize the value. In the examples in this part of ISO/IEC 21000, the value is specified as a DII dii:Identifier element, hence the application understands this is a DII identifier that can be conveyed in a DIDL Descriptor.

© ISO/IEC 2006 – All rights reserved

Copyright International Organization for Standardization
Provided by IHS under license with ISO
No reproduction or networking permitted without license from IHS
Not for Resale

6.3.3 ipmpdidl:Info

6.3.3.1 Syntax

Diagram	
Used by	
Source	<element name="Info"> <complexType mixed="true"> <sequence> <any namespace="##any" processContents="lax" minOccurs="0"/> </sequence> </complexType> </element>

6.3.3.2 Semantics

This element acts as a placeholder for IPMP Information from an appropriate namespace, to be associated with the protected Representation of the Contents. This IPMP Information will be used by processes seeking to make the Contents available for consumption.

NOTE The ipmpdidl:Info allows for other non-MPEG ipmp info which could be either text or XML based or mixed. If an application is not able to understand the ipmp info, then it might be unable to process the associated content.

6.3.4 ipmpdidl:ContentInfo

6.3.4.1 Syntax

Diagram	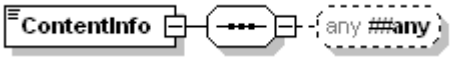
Source	<element name="ContentInfo"> <complexType mixed="true"> <sequence> <any namespace="##any" processContents="lax" minOccurs="0"/> </sequence> </complexType> </element>

6.3.4.2 Semantics

The ipmpdidl:ContentInfo element acts as a placeholder for metadata, to be associated with the protected Contents.

6.3.5 ipmpdidl:Contents

6.3.5.1 Syntax

Diagram				
Attributes	**Name**	**Type**	**Use**	**Semantics**
	Ref	anyURI	Optional	Contains the location from where the Contents can be retrieved

--`,,```,,,,````-`-`,,`,,`,`,,`---

© ISO/IEC 2006 – All rights reserved
Copyright International Organization for Standardization
Provided by IHS under license with ISO
No reproduction or networking permitted without license from IHS
Not for Resale

Source	<element name="Contents"> <complexType mixed="true"> <sequence> <any namespace="##any" processContents="lax" minOccurs="0"/> </sequence> <attribute name="ref" type="anyURI"/> </complexType> </element>

6.3.5.2 Semantics

This element contains Contents which is being protected by the parent IPMP DIDL element. This may be a protected element of the DIDL structure, for example a protected didl:Item or didl:Resource, or (if the parent IPMP DIDL element is ipmpdidl:ProtectedAsset) an asset such as an image or audio file. In any case the Contents shall be either inline or referred (using the ref attribute), but not both. This Contents will generally be obfuscated or protected in some form (e.g. encryption).

7 IPMP Information Descriptor

7.1 Introduction

The description of IPMP governance and tools is required to satisfy intellectual property management and protection for a Digital Item or its parts to be accessed. The purpose of this clause is to describe the syntax and semantics of the W3C XML representation for declaring IPMP information. The root element for IPMP Information Descriptor schema is “IPMPInfoDescriptor”, which contains a range of information related to IPMP governance and tools. The syntax is defined using XML schema (as specified in W3C XMLSCHEMA). For the purposes of this document, the XML schema syntax descriptions are also collectively referred to as IPMP Information schema.

Among them there are

— IPMP Tool information (subclause 7.4), which includes ToolDescription directly described within the descriptor or through reference and initialization settings for such tool,

— different level Rights description of governance of the usage for IPMP Tool or content (subclause 7.5), and

— the associated digital signature (subclause 7.6). The syntax for “Signature” is the same throughout this part of ISO/IEC 21000 and is defined in its first appearance (subclause 7.4.4.5.4.1).

When used for DIDL protection, the IPMPInfoDescriptor shall be used within IPMP DIDL elements as a child element of an ipmpdidl:Info element. The IPMPInfoDescriptor may also be used for signalling protection information for non-DIDL multimedia declaration.

The elements representing the information that may be contained in the IPMP Information Descriptor are specified by the following subclauses.

The elements defined in the IPMPInfoDescriptor XML Schema are part of the namespace URI defined as “`urn:mpeg:mpeg21:2004:01-IPMPINFO-NS`”. The “01” represents a serial number that is expected to change as the IPMPInfoDescriptor schema evolves along with this part of ISO/IEC 21000.

Throughout this clause consistent namespace prefixes are used. The prefix used by the elements defined in this part of ISO/IEC 21000 related to the namespace URI “`urn:mpeg:mpeg21:2004:01-IPMPINFO-NS`” is “ipmpinfo:”.

© ISO/IEC 2006 – All rights reserved

Copyright International Organization for Standardization
Provided by IHS under license with ISO
No reproduction or networking permitted without license from IHS
Not for Resale

Example:

```
<ipmpinfo:IPMPInfoDescriptor xmlns:ipmpinfo=”urn:mpeg:mpeg21:2004:01-IPMPINFO-NS”>
……..
<ipmpinfo:IPMPInfoDescriptor>
```

NOTE The use of this prefix is not normative, other prefixes can be used for the namespace URI “urn:mpeg:mpeg21:2004:01-IPMPINFO-NS”.

7.2 Schema wrapper

The syntax of description tools specified in this subclause is provided as a collection of schema components, consisting notably in type definitions and element declarations. In order to form a valid schema document, these schema components should be gathered in a schema document with the following declaration defining in particular the target namespace and the namespaces prefixes.

```
<?xml version="1.0"?>
<schema targetNamespace="urn:mpeg:mpeg21:2004:01-IPMPINFO-NS"
xmlns="http://www.w3.org/2001/XMLSchema" xmlns:ipmpinfo="urn:mpeg:mpeg21:2004:01-IPMPINFO-NS"
xmlns:dii="urn:mpeg:mpeg21:2002:01-DII-NS" xmlns:r="urn:mpeg:mpeg21:2003:01-REL-R-NS"
xmlns:dsig="http://www.w3.org/2000/09/xmldsig#" elementFormDefault="qualified"
attributeFormDefault="unqualified" version="0.01">
    <import namespace="http://www.w3.org/2000/09/xmldsig#"
schemaLocation="http://www.w3.org/TR/2002/REC-xmldsig-core-20020212/xmldsig-core-schema.xsd"/>
    <import namespace="urn:mpeg:mpeg21:2003:01-REL-R-NS" schemaLocation="rel-r.xsd"/>
    <import namespace="urn:mpeg:mpeg21:2002:01-DII-NS" schemaLocation="dii.xsd"/>
```

Additionally, the following line should be appended to the resulting schema document in order to obtain a well-formed XML document.

```
  </schema>
```

7.3 IPMPInfoDescriptor

7.3.1 Introduction

This subclause specifies the IPMP information to process its associated Contents.

7.3.2 Syntax

Diagram	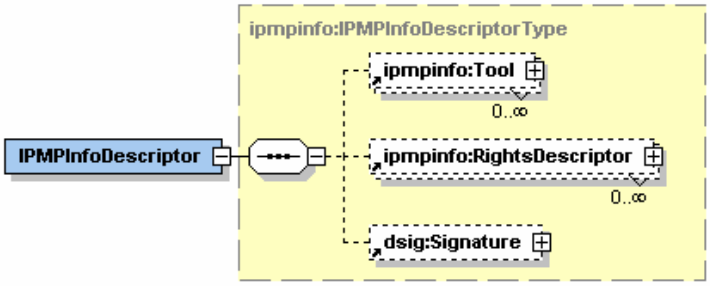
Children	<Tool> <RightsDescriptor> <Signature>
Source	<element name="IPMPInfoDescriptor" type="ipmpinfo:IPMPInfoDescriptorType"/> <complexType name="IPMPInfoDescriptorType"> <sequence> <element ref="ipmpinfo:Tool" minOccurs="0" maxOccurs="unbounded"/> <element ref="ipmpinfo:RightsDescriptor" minOccurs="0" maxOccurs="unbounded"/> <element ref="dsig:Signature" minOccurs="0"/> </sequence> </complexType>

© ISO/IEC 2006 – All rights reserved
Copyright International Organization for Standardization
Provided by IHS under license with ISO
No reproduction or networking permitted without license from IHS
Not for Resale

7.3.3 Semantics

The ipmpinfo:IPMPInfoDescriptor element is the container for the required IPMP information to process its associated Contents.

7.3.4 Example

The ipmpinfo:IPMPInfoDescriptor element contains information related to the IPMP Tools that protect the associated Contents and to the licenses that govern them. This example shows how the required IPMP information can be associated with the Content to protect and govern the Content. In this case the information needed is the description of the IPMP Tool and the license that governs this content.

```
<ipmpinfo:IPMPInfoDescriptor>
    <ipmpinfo:Tool>
        <ipmpinfo:ToolRef localidref="Tool1"/>
        <ipmpinfo:InitializationSettings>
            <ipmpinfo:InitializationData> ... </ipmpinfo:InitializationData>
        </ipmpinfo:InitializationSettings>
    </ipmpinfo:Tool>
    <ipmpinfo:RightsDescriptor>
        <ipmpinfo:License>
            <r:license> ... </r:license>
        </ipmpinfo:License>
    </ipmpinfo:RightsDescriptor>
    <dsig:Signature> ... </dsig:Signature>
</ipmpinfo:IPMPInfoDescriptor>
```

7.4 Tool

7.4.1 Introduction

The ipmpinfo:Tool element specifies the IPMP tool information required to protect the Digital Item or its parts.

7.4.2 Syntax

Diagram	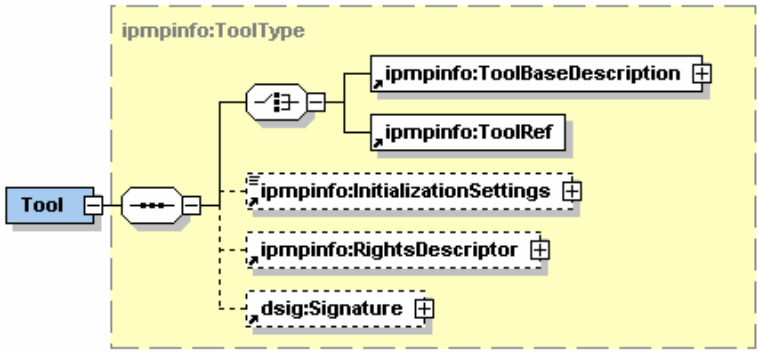			
Children	<ToolBaseDescription> <ToolRef> <InitializationSettings> <RightsDescriptor> <Signature>			
Used by	<IPMPInfoDescriptor>			
Attributes	**Name**	**Type**	**Use**	**Description**

Copyright International Organization for Standardization © ISO/IEC 2006 All rights reserved
Provided by IHS under license with ISO
No reproduction or networking permitted without license from IHS
Not for Resale

	order	positiveInteger	Optional	Describes the order at which the IPMP tool must be executed in relation to other tools associated to the protected content. IPMP tool which has lower order shall be executed first.
Source	<element name="Tool" type="ipmpinfo:ToolType"/> <complexType name="ToolType"> <sequence> <choice minOccurs="0"> <element ref="ipmpinfo:ToolBaseDescription"/> <element ref="ipmpinfo:ToolRef"/> </choice> <element ref="ipmpinfo:InitializationSettings" minOccurs="0"/> <element ref="ipmpinfo:RightsDescriptor" minOccurs="0"/> <element ref="dsig:Signature" minOccurs="0"/> </sequence> <attribute name="order" type="positiveInteger"/> </complexType>			

7.4.3 Semantics

The ipmpinfo:Tool element describes an IPMP tool. IPMP tools are modules that perform (one or more) IPMP functions such as authentication, decryption, watermarking, etc. A given IPMP tool may coordinate other IPMP tools. IPMP Tool has the granularity that it can be a single protection module, for example, a single decryption tool, and can also be a collection of tools, i.e. a complete IPMP system. Tools can be executed in any order if the order attribute is not present. Similarly the tools with the same order number can be executed in any order. If an IPMP tool is being used to protect a resource fragment, the fragment should be identified using the ipmpdidl:fragment element. An example of this is given in Annex G.

7.4.4 ToolBaseDescription

7.4.4.1 Syntax

Diagram	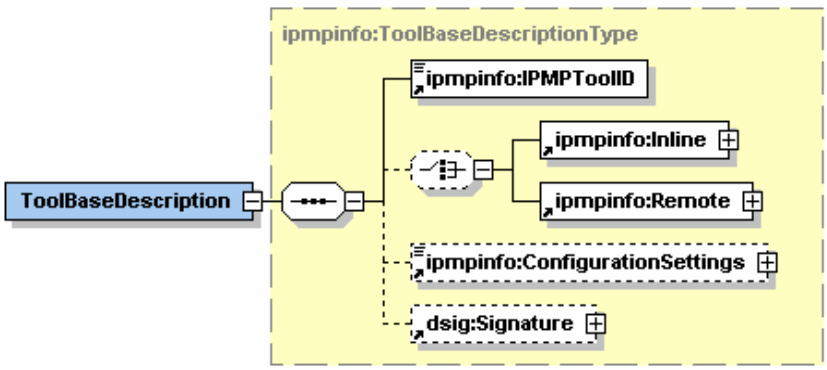
Children	<IPMPToolID> <Inline> <Remote> <ConfigurationSettings> <Signature>
Used by	<Tool>

© ISO/IEC 2006 – All rights reserved
Copyright International Organization for Standardization
Provided by IHS under license with ISO
No reproduction or networking permitted without license from IHS
Not for Resale

Source	<element name="ToolBaseDescription" type="ipmpinfo:ToolBaseDescriptionType"/> <complexType name="ToolBaseDescriptionType"> <sequence> <element ref="ipmpinfo:IPMPToolID"/> <choice minOccurs="0"> <element ref="ipmpinfo:Inline"/> <element ref="ipmpinfo:Remote"/> </choice> <element ref="ipmpinfo:ConfigurationSettings" minOccurs="0"/> <element ref="dsig:Signature" minOccurs="0"/> </sequence> </complexType>

7.4.4.2 Semantics

The ipmpinfo:ToolBaseDescription element explicitly describes the IPMP tool.

7.4.4.3 Example

The ipmpinfo:ToolBaseDescription element describes an IPMP tool. This example shows how the information related to the tool information, such as the universally unique identifier for this tool, the remote location from where this tool can be retrieved and the configuration settings for this tool, can be described using the ipmpinfo:ToolBaseDescription element.

```
<ipmpinfo:ToolBaseDescription>
    <ipmpinfo:IPMPToolID>urn:mpegRA:mpeg21:IPMP:ABC005:77:29</ipmpinfo:IPMPToolID>
    <ipmpinfo:Remote ref="urn:IPMPToolsServer:ToolEnc005-3484"/>
    <ipmpinfo:ConfigurationSettings> .. </ipmpinfo:ConfigurationSettings>
</ipmpinfo:ToolBaseDescription>
```

7.4.4.4 IPMPToolID

7.4.4.4.1 Syntax

Diagram	
Used by	<ToolBaseDescription>
Source	<element name="IPMPToolID" type="anyURI"/>

7.4.4.4.2 Semantics

The ipmpinfo:IPMPToolID element represents the universally unique identifier for an IPMP tool. A registration authority for IPMP Tools that use a unique ID is required. The registration authority may further maintain an association of the download URLs for various implementations of the given tool for various platforms. These platforms will be described to adequate detail using a structured representation. The IPMP ToolID identifies a specific IPMP Tool, unless in the reserved range for parametrically defined tools or alternative tools.

© ISO/IEC 2006 – All rights reserved

Copyright International Organization for Standardization
Provided by IHS under license with ISO
No reproduction or networking permitted without license from IHS
Not for Resale

7.4.4.5 Inline

7.4.4.5.1 Syntax

Diagram	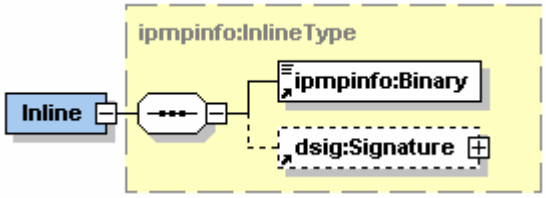
Children	<Binary> <Signature>
Used by	<ToolBaseDescription> <ToolDescription>
Source	<element name="Inline" type="ipmpinfo:InlineType"/> <complexType name="InlineType"> <sequence> <element ref="ipmpinfo:Binary"/> <element ref="dsig:Signature" minOccurs="0"/> <!--Signature for the tool binary --> </sequence> </complexType>

7.4.4.5.2 Semantics

The Inline element is a container to carry the binary of the tool.

7.4.4.5.3 Binary

7.4.4.5.3.1 Syntax

Diagram	
Used by	<Inline>
Source	<element name="Binary" type="base64Binary"/>

7.4.4.5.3.2 Semantics

The ipmpinfo:Binary element contains a Base64-encoded IPMP tool.

A peer should determine how to process this binary tool from the other information contained in IPMPinfo descriptors. These will describe the nature of the tool and how it should be processed.

© ISO/IEC 2006 – All rights reserved
Copyright International Organization for Standardization
Provided by IHS under license with ISO
No reproduction or networking permitted without license from IHS
Not for Resale

7.4.4.5.4 Signature

7.4.4.5.4.1 Syntax

Diagram	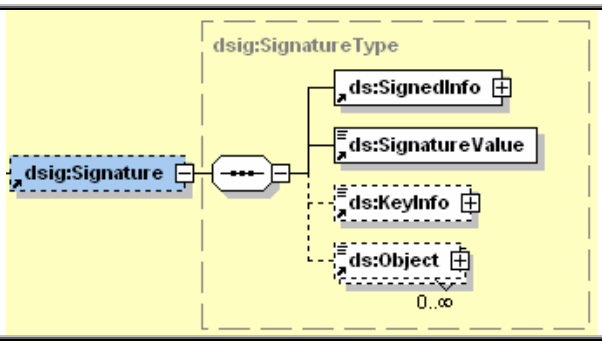
Used by	<Inline>
Source	<element ref="dsig:Signature" minOccurs="0"/>

7.4.4.5.4.2 Semantics

The dsig:Signature element contains the signature for the `Inline` element.

The semantics for all elements under `Signature` should refer to [XMLDSIG].

7.4.4.6 Remote

7.4.4.6.1 Syntax

Diagram				
Used by	<ToolBaseDescription> <ToolDescription>			
Children	<Signature>			
Attributes	**Name**	**Type**	**Use**	**Semantics**
	ref	anyURI	Required	The location where the tool can be retrieved. The reference location can be any URI.
Source	<element name="Remote" type="ipmpinfo:RemoteType"/> <complexType name="RemoteType"> <sequence> <element ref="dsig:Signature"/> </sequence> <attribute name="ref" type="anyURI" use="Required" /> </complexType>			

7.4.4.6.2 Semantics

The ipmpinfo:Remote element contains the remote location from where the tool can be retrieved.

A peer should determine how to process this remote tool resource identified by the value of the `ref` attribute from the other information contained in IPMPinfo descriptors. These will describe the nature of the tool and how it should be processed.

© ISO/IEC 2006 – All rights reserved
Copyright International Organization for Standardization
Provided by IHS under license with ISO
No reproduction or networking permitted without license from IHS
Not for Resale

7.4.4.6.3 Signature

7.4.4.6.3.1 Syntax

Refer to subclause 7.4.4.5.4.1 for the syntax of Signature element.

7.4.4.6.3.2 Semantics

The dsig:Signature element contains the signature for the `Remote` element.

The semantics for all elements under `Signature` should refer to [XMLDSIG].

7.4.4.7 ConfigurationSettings

7.4.4.7.1 Syntax

Diagram	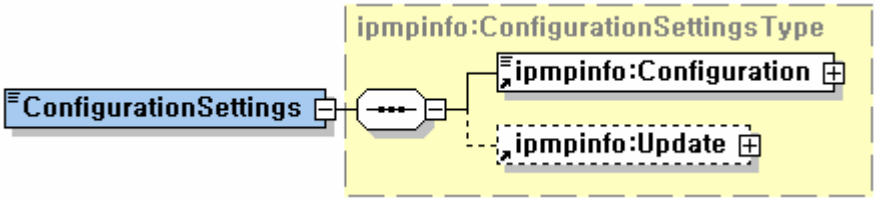
Used by	<ToolBaseDescription> <ToolDescription>
Children	<Configuration> <Update>
Source	<element name="ConfigurationSettings" type="ipmp:ConfigurationSettingsType"/> <complexType name="ConfigurationSettingsType" mixed="true"> <sequence> <element ref="ipmpinfo:Configuration"/> <element ref="ipmpinfo:Update" minOccurs="0"/> </sequence> </complexType>

7.4.4.7.2 Semantics

The ipmpinfo:ConfiguratinSettings element is a container to carry configuration settings for a specific IPMP tool.

7.4.4.7.3 Configuration

7.4.4.7.3.1 Introduction

The ipmpinfo:Configuration element specifies the detailed settings for the IPMP tool configuration.

7.4.4.7.3.2 Syntax

Diagram	
Used by	<ConfigurationSettings>

© ISO/IEC 2006 – All rights reserved
Copyright International Organization for Standardization
Provided by IHS under license with ISO
No reproduction or networking permitted without license from IHS
Not for Resale

Source	<element name="Configuration" type="ipmpinfo:ConfigurationType"/> <complexType name="ConfigurationType" mixed="true"> <sequence> <any namespace="##any" processContents="lax" minOccurs="0"/> </sequence> </complexType>

7.4.4.7.3.3 Semantics

The ipmpinfo:Configuration element describes the detailed settings for the IPMP tool configuration.

7.4.4.7.4 Update

7.4.4.7.4.1 Introduction

The ipmpinfo:Update element specifies the information required to update the IPMP tool.

7.4.4.7.4.2 Syntax

Diagram	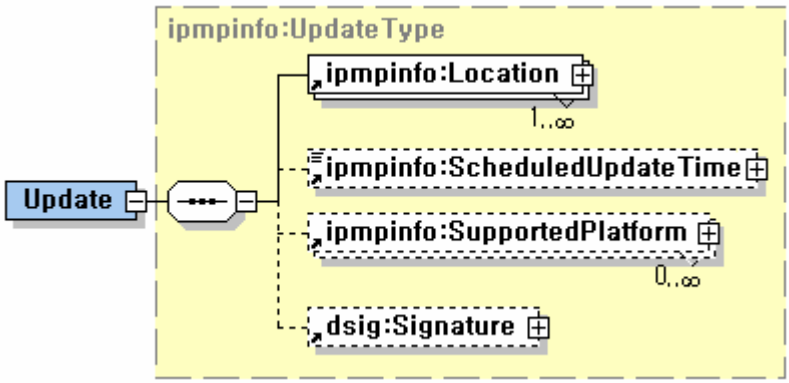
Used by	<ConfigurationSettings>
Children	<Location> <ScheduledUpdateTime> <SupportedPlatform> <Signature>
Source	<element name="Update" type="ipmpinfo:UpdateType"/> <complexType name="UpdateType"> <sequence> <element ref="ipmpinfo:Location" maxOccurs="unbounded"/> <element ref="ipmpinfo:ScheduledUpdateTime" minOccurs="0"/> <element ref="ipmpinfo:SupportedPlatform" minOccurs="0" maxOccurs="unbounded"/> <element ref="dsig:Signature" minOccurs="0"/> </sequence> </complexType>

7.4.4.7.4.3 Semantics

The ipmpinfo:Update element describes the information required to update the IPMP tool.

Note The updating of the IPMP tool should be performed automatically (e.g. scheduled) or manually. When the IPMP tool is updated, the associated tool information in a Peer (after parsed from IPMP information descriptor) also should be updated. In Annex H, informative updating mechanism is provided.

© ISO/IEC 2006 All rights reserved

Copyright International Organization for Standardization
Provided by IHS under license with ISO
No reproduction or networking permitted without license from IHS
Not for Resale

7.4.4.7.4.4 Location

Syntax

Diagram				
Used by	<Update>			
Children	<Signature>			
Attributes	**Name**	**Type**	**Use**	**Semantics**
	ref	anyURI	Required	The location where the tool can be retrieved for its updating. The reference location can be any URI.
Source	<element name="Location" type="ipmpinfo:RemoteType"/>			

Semantics

The ipmpinfo:Location element contains the remote location from where the tool can be retrieved for updating. This location for updating may be different from where the IPMP tool was retrieved or same as the location by the ipmpinfo:Remote element.

7.4.4.7.4.5 ScheduledUpdateTime

Syntax

Diagram				
Used by	<Update>			
Attributes	**Name**	**Type**	**Use**	**Semantics**
	period	duration	Optional	Describes the periodic time for the scheduled updating of the IPMP tool.
Source	<element name="ScheduledUpdateTime" type="ipmpinfo:ScheduledUpdateTimeType"/> <complexType name="ScheduledUpdateTimeType"> <simpleContent> <extension base="dateTime"> <attribute name="periodic" type="duration" use="optional"/> </extension> </simpleContent> </complexType>			

Semantics

The ipmpinfo:ScheduledUpdateTime element describes a time condition that initiates the scheduled updating of the IPMP tool. It can be combined with periodic updating by specifying its period.

Validation Rule:

— If current date has a value later than ipmpinfo:ScheduledUpdateTime element, the IPMP tool update shall be initiated.

© ISO/IEC 2006 – All rights reserved
Copyright International Organization for Standardization
Provided by IHS under license with ISO
No reproduction or networking permitted without license from IHS
Not for Resale

7.4.4.7.4.6 SupportedPlatform

Syntax

Diagram	
Used by	<Update>
Source	<element name="SupportedPlatform" type="ipmpinfo:SupportedPlatformType"/> <complexType name="SupportedPlatformType"> <sequence> <any namespace="##any" processContents="lax" minOccurs="0"/> </sequence> </complexType>

Semantics

The ipmpinfo:SupportedPlatform element describes a updating condition that specifies the required platform properties and capabilities (e.g., hardware, middleware, operating system etc.) that support the tool properly. If the current properties and capabilities of the IPMP Peer do not meet the information described in the ipmpinfo:SupportedPlatform, the updating of the IPMP tool should be initiated.

7.4.4.7.4.7 Signature

Syntax

Refer to subclause 7.4.4.5.4.1 for the syntax of `Signature` element.

Semantics

The dsig:Signature element contains the signature for the ipmpinfo:Update element.

The semantics for all elements under Signature should refer to [XMLDSIG].

7.4.4.7.4.8 Example

This example shows that “scheduled updating” of the IPMP tool begins at January 1, 2005 with a period of 1 day. Also, the IPMP tool can be updated if the IPMP fails to support the terminal platform specification that is described by `mpeg4ipmp` schema.

```
<ipmpinfo:Tool>
    <ipmpinfo:ToolBaseDescription>
        <ipmpinfo:IPMPToolID>urn:mpegRA:mpeg21:IPMP:ABC002:56:79</ipmpinfo:IPMPToolID>
        <ipmpinfo:Remote ref="urn:IPMPToolsServer:ToolPartEnc002-9090-v.1.0"/>
        <ipmpinfo:ConfigurationSettings>
            <ipmpinfo:Configuration>...</ipmpinfo:Configuration>
            <ipmpinfo:Update>
                <ipmpinfo:Location ref="urn:IPMPToolsUpdatingServer1:ToolPartEnc002-9090-
NewVersion"/>
                <ipmpinfo:ScheduledUpdateTime period="P1D">2005-03-07T00:00:00
                </ipmpinfo:ScheduledUpdateTime>
                    <ipmpinfo:SupportedPlatform xmlns:mpeg4ipmp="urn:mpeg:mpeg4:IPMPSchema:2002">
                        <mpeg4ipmp:TerminalID>
```

© ISO/IEC 2006 – All rights reserved

Copyright International Organization for Standardization
Provided by IHS under license with ISO
No reproduction or networking permitted without license from IHS
Not for Resale

```
                        <mpeg4ipmp:TerminalType>
                           <mpeg4ipmp:Vendor>Samsung</mpeg4ipmp:Vendor>
                           <mpeg4ipmp:Model>Sens SP28-D130</mpeg4ipmp:Model>
                        </mpeg4ipmp:TerminalType>
                        <mpeg4ipmp:OperatingSystem>
                           <mpeg4ipmp:Vendor>Microsoft Corporation</mpeg4ipmp:Vendor>
                           <mpeg4ipmp:Model>Windows XP Professional</mpeg4ipmp:Model>
                           <mpeg4ipmp:Version>XP SP2</mpeg4ipmp:Version>
                        </mpeg4ipmp:OperatingSystem>
                        <mpeg4ipmp:CPU>
                           <mpeg4ipmp:Vendor>Intel Corporation</mpeg4ipmp:Vendor>
                           <mpeg4ipmp:Model>Intel® Celeron® M Processor</mpeg4ipmp:Model>
                           <mpeg4ipmp:Speed>100</mpeg4ipmp:Speed>
                        </mpeg4ipmp:CPU>
                        <mpeg4ipmp:Memory>
                           <mpeg4ipmp:Vendor>Samsung</mpeg4ipmp:Vendor>
                           <mpeg4ipmp:Model>DDR2 SDRAM</mpeg4ipmp:Model>
                           <mpeg4ipmp:Size>256</mpeg4ipmp:Size>
                           <mpeg4ipmp:Speed>800</mpeg4ipmp:Speed>
                        </mpeg4ipmp:Memory>
                     </mpeg4ipmp:TerminalID>
                  </ipmpinfo:SupportedPlatform>
               </ipmpinfo:Update>
        </ipmpinfo:ConfigurationSettings>
    </ipmpinfo:ToolBaseDescription>
</ipmpinfo:Tool>
```

7.4.4.8 Signature

7.4.4.8.1 Syntax

Refer to subclause 7.4.4.5.4.1 for the syntax of `Signature` element.

7.4.4.8.2 Semantics

The dsig:Signature element contains the signature for the `ipmpinfo:ToolBaseDescription` element.

The semantics for all elements under `Signature` should refer to [XMLDSIG].

7.4.5 ToolRef

7.4.5.1 Syntax

Diagram	ToolRef			
Used by	<Tool>			
Attributes	**Name**	**Type**	**Use**	**Semantics**
	localidref	IDREF	Required	Describes the reference to the `localID` of the IPMP tool defined in the `ToolList` of `IPMPGeneralInfoDescriptor`.
Source	<element name="ToolRef" type="ipmpinfo:ToolRef"/> <complexType name="ToolRef"> <attribute name="localidref" type="IDREF" use="required"/> </complexType>			

© ISO/IEC 2006 – All rights reserved
Copyright International Organization for Standardization
Provided by IHS under license with ISO
No reproduction or networking permitted without license from IHS
Not for Resale

7.4.5.2 Semantics

The ipmpinfo:ToolRef element provides a reference to the IPMP tool defined in the `ToolList` of `IPMPGeneralInfoDescriptor`.

7.4.6 InitializationSettings

7.4.6.1 Syntax

Diagram	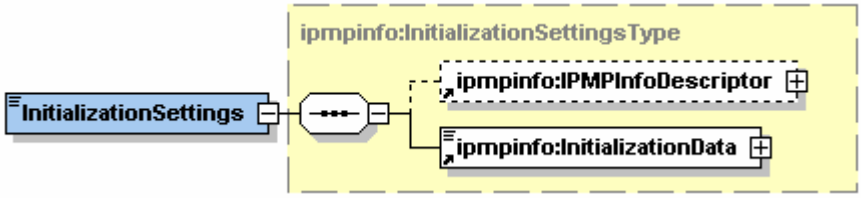
Children	<IPMPInfoDescriptor> <InitializationData>
Used by	<Tool>
Source	<element name="InitializationSettings" type="ipmpinfo:InitializationSettingsType"/> <complexType name="InitializationSettingsType" mixed="true"> <sequence> <element ref="ipmpinfo:IPMPInfoDescriptor" minOccurs="0"/> <element ref="ipmpinfo:InitializationData"/> </sequence> </complexType>

7.4.6.2 Semantics

The ipmpinfo:InitializationSettings element provides a container to carry the detailed settings to initialize the tool.

7.4.6.3 IPMPInfoDescriptor

7.4.6.3.1 Syntax

The syntax for **`IPMPInfoDescriptor`** element should refer to subclause 7.3.2.

7.4.6.3.2 Semantics

The ipmpinfo:IPMPInfoDescriptor element describes the IPMP information related to the protected `InitializationData`.

Validation Rule:

— If an ipmpinfo:IPMPInfoDescriptor element has an ipmpinfo:Tool element with a ipmpinfo:ToolRef child element that has the attribute localidref with a certain value x, then there shall exist within the ipmpinfo:IPMPGeneralInfoDescriptor element an ipmpinfo:ToolList element in the same DIDL document that has an ipmpinfo:ToolDescription element with the attribute localID with value x.

© ISO/IEC 2006 – All rights reserved

Copyright International Organization for Standardization
Provided by IHS under license with ISO
No reproduction or networking permitted without license from IHS
Not for Resale

7.4.6.4 InitializationData

7.4.6.4.1 Syntax

Diagram	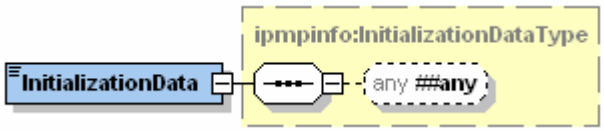
Used by	<InitializationSettings>
Source	<element name="InitializationData" type="ipmpinfo:InitializationDataType"/> <complexType name="InitializationDataType" mixed="true"> <sequence> <any namespace="##any" processContents="lax" minOccurs="0"/> </sequence> </complexType>

7.4.6.4.2 Semantics

The ipmpinfo:InitializationData element describes the detailed settings to initialize the tool.

7.4.7 RightsDescriptor

The ipmpinfo:RightsDescriptor element contains information about the license that governs the IPMP tool. The existence of ipmpinfo:RightsDescriptor under the ipmpinfo:ToolBaseDescription element indicates that there is governance for the usage of the IPMP tool.

The ipmpinfo:RightsDescriptor may contain an ipmpinfo:IPMPInfoDescriptor element and a License, ipmpinfo:LicenseReference or ipmpinfo:LicenseService elements.

The ipmpinfo:IPMPInfoDescriptor element contains the IPMP information related to the protected license(s).

7.4.7.1 Syntax

Diagram	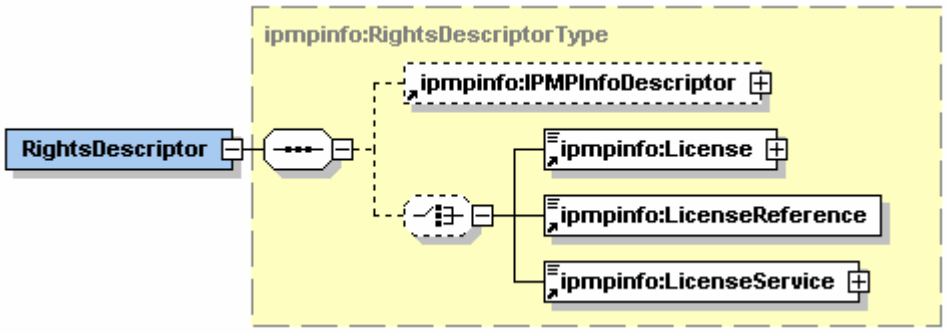
Children	<IPMPInfoDescriptor> <License> <LicenseReference> <LicenseService>
Used by	<IPMPInfoDescriptor> <Tool> <ToolDescription> <LicenseCollection>
Source	<element name="RightsDescriptor" type="ipmpinfo:RightsDescriptorType"/> <complexType name="RightsDescriptorType"> <sequence> <element ref="ipmpinfo:IPMPInfoDescriptor" minOccurs="0"/> <choice minOccurs="0"> <element ref="ipmpinfo:License"/> <element ref="ipmpinfo:LicenseReference"/> <element ref="ipmpinfo: LicenseService"/> </choice> </sequence> </complexType>

© ISO/IEC 2006 – All rights reserved
Copyright International Organization for Standardization
Provided by IHS under license with ISO
No reproduction or networking permitted without license from IHS
Not for Resale

7.4.7.2 Semantics

The ipmpinfo:RightsDescriptor element contains information about the license that governs the IPMP tool information.

7.4.7.3 License

7.4.7.3.1 Syntax

Diagram	
Used by	<RightsDescriptor>
Source	<element name="License" type="ipmpinfo:LicenseType"/> <complexType name="LicenseType" mixed="true"> <sequence> <any namespace="##any" processContents="lax" minOccurs="0" maxOccurs="unbounded"/> </sequence> </complexType>

7.4.7.3.2 Semantics

The ipmpinfo:License element that represents a container to carry license(s).

7.4.7.4 LicenseReference

7.4.7.4.1 Syntax

Diagram				
Used by	<RightsDescriptor>			
Attributes	**Name**	**Type**	**Use**	**Semantics**
	ref	anyURI	Required	Contains the location from where the license(s) can be retrieved
Source	<element name="LicenseReference" type="ipmpinfo:LicenseReferenceType"/> <complexType name="LicenseReferenceType"> <attribute name="ref" type="anyURI" use="required"/> </complexType>			

7.4.7.4.2 Semantics

The ipmpinfo:LicenseReference element represents the remote location from where the license(s) can be retrieved.

The ipmpinfo:LicenseReference element has the attribute ref that contains the location where the license(s) can be retrieved.

© ISO/IEC 2006 – All rights reserved
Copyright International Organization for Standardization
Provided by IHS under license with ISO
No reproduction or networking permitted without license from IHS
Not for Resale

7.4.7.5 LicenseService

7.4.7.5.1 Syntax

Diagram	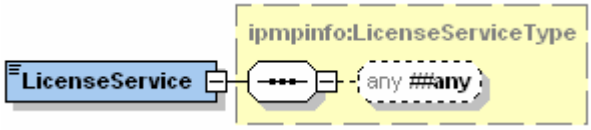
Used by	<RightsDescriptor>
Source	<element name="LicenseService" type="ipmpinfo:LicenseServiceType"/> <complexType name="LicenseServiceType" mixed="true"> <sequence> <any namespace="##any" processContents="lax" minOccurs="0" maxOccurs="unbounded"/> </sequence> </complexType>

7.4.7.5.2 Semantics

The ipmpinfo:LicenseService element contains a reference to a license service, which provides the service for obtaining the corresponding license.

7.4.7.6 Example

The ipmpinfo:RightsDescriptor element contains information about the license that governs an object. This example shows how this element and the ipmpinfo:License element are used to carry rights information.

```
<ipmpinfo:RightsDescriptor>
    <ipmpinfo:License>
        <r:license>
            <r:grant>
              <mx:play/>
              <mx:diReference>
                <mx:identifier>urn:grid:a1-abcde-9630741852-f</mx:identifier>
              </mx:diReference>
            </r:grant>
        </r:license>
    </ipmpinfo:License>
</ipmpinfo:RightsDescriptor>
```

7.4.8 Signature

7.4.8.1 Syntax

The syntax for signature element should refer to subclause 7.4.4.5.4.1.

7.4.8.2 Semantics

The dsig:Signature element contains the signature for the ipmpinfo:Tool element.

The semantics for all elements under Signature should refer to [XMLDSIG].

© ISO/IEC 2006 – All rights reserved
Copyright International Organization for Standardization
Provided by IHS under license with ISO
No reproduction or networking permitted without license from IHS
Not for Resale

7.4.9 Example

The ipmpinfo:Tool element contains information describing IPMP Tools. This example shows how an IPMP Tool can be described.

```
<ipmpinfo:Tool>
    <ipmpinfo:ToolBaseDescription>
        <ipmpinfo:IPMPToolID>urn:mpegRA:mpeg21:IPMP:ABC002:56:79</ipmpinfo:IPMPToolID>
        <ipmpinfo:Remote ref="urn:IPMPToolsServer:ToolPartEnc002-9090"/>
        <ipmpinfo:ConfigurationSettings> ... </ipmpinfo:ConfigurationSettings>
    </ipmpinfo:ToolBaseDescription>
    <ipmpinfo:InitializationSettings>
        <ipmpinfo:InitializationData> ... </ipmpinfo:InitializationData>
    </ipmpinfo:InitializationSettings>
</ipmpinfo:Tool>
```

7.5 RightsDescriptor

7.5.1 Syntax

Refer to subclause 7.4.7.1 for the syntax of RightsDescriptor element.

7.5.2 Semantics

The ipmpinfo:RightsDescriptor element contains information about the license that governs the IPMP information.

7.6 Signature

7.6.1 Syntax

Refer to subclause 7.4.4.5.4.1 for the syntax of Signature element.

7.6.2 Semantics

The dsig:Signature element contains the signature for the ipmpinfo:IPMPInfoDescriptor element.

8 IPMP General Information Descriptor

8.1 Introduction

The purpose of this clause is to describe the syntax and semantics of the W3C XML representation for representing general control and the global governance information about IPMP tools and rights expressions relating to a complete DID. It should be carried at the outmost place of the protected DIDL. If Digital Item is directly declared by the Item of DIDL, the IPMPGeneralInfoDescriptor should be carried under the hierarchy DIDL/Declarations/Descriptor/Statement. If Digital Item is declared by the Item of Container of DIDL, the IPMPGeneralInfoDescriptor should be carried under the hierarchy DIDL/Container/Descriptor/Statement. The syntax is defined using XML schema (as specified in W3C XMLSCHEMA). For the purposes of this document, the XML schema syntax descriptions are also collectively referred to as IPMP Information schema.

When used for DIDL protection, the IPMPGeneralInfoDescriptor shall be contained in a Descriptor of the outermost element excepting the DIDL (or DIDLInfo or Declarations) element of the DIDL document within “Statement” element as a child element of an ipmpdidl:Info element. The IPMPGeneralInfoDescriptor may also be used for signalling protection information for non-DIDL multimedia declaration.

© ISO/IEC 2006 – All rights reserved

Copyright International Organization for Standardization
Provided by IHS under license with ISO
No reproduction or networking permitted without license from IHS
Not for Resale

The IPMPGeneralInfoDescriptor element and its associated elements defined in this clause are used to communicate general information relating to a complete Digital Item. The elements representing the information that may be contained in the IPMP General Information Descriptor are specified by the following subclauses.

The elements defined in the IPMPGeneralInfoDesriptor XML Schema are part of the namespace URI defined as "urn:mpeg:mpeg21:2004:01-IPMPINFO-NS". The "01" represents a serial number that is expected to change as the IPMPGeneralInfoDescriptor schema evolves along with this part of ISO/IEC 21000.

Throughout this clause consistent namespace prefixes are used. The prefix used by the elements defined in this part of ISO/IEC 21000 related to the namespace URI "urn:mpeg:mpeg21:2004:01-IPMPINFO-NS" is "ipmpinfo:".

Example:

```
<ipmpinfo:IPMPGeneralInfoDescriptor xmlns:ipmpinfo="urn:mpeg:mpeg21:2004:01-IPMPINFO-NS">
……
<ipmpinfo:IPMPGeneralInfoDescriptor>
```

NOTE The use of this prefix is not normative, other prefixes can be used for the namespace URI "urn:mpeg:mpeg21:2004:01-IPMPINFO-NS".

8.2 Schema wrapper

The syntax of description tools specified in this subclause is provided as a collection of schema components, consisting notably in type definitions and element declarations. In order to form a valid schema document, these schema components should be gathered in a schema document with the following declaration defining in particular the target namespace and the namespaces prefixes.

```
<?xml version="1.0"?>
<schema targetNamespace="urn:mpeg:mpeg21:2004:01-IPMPINFO-NS"
xmlns="http://www.w3.org/2001/XMLSchema" xmlns:ipmpinfo="urn:mpeg:mpeg21:2004:01-IPMPINFO-NS"
xmlns:dii="urn:mpeg:mpeg21:2002:01-DII-NS" xmlns:r="urn:mpeg:mpeg21:2003:01-REL-R-NS"
xmlns:dsig="http://www.w3.org/2000/09/xmldsig#" elementFormDefault="qualified"
attributeFormDefault="unqualified" version="0.01">
    <import namespace="http://www.w3.org/2000/09/xmldsig#"
schemaLocation="http://www.w3.org/TR/2002/REC-xmldsig-core-20020212/xmldsig-core-schema.xsd"/>
    <import namespace="urn:mpeg:mpeg21:2003:01-REL-R-NS" schemaLocation="rel-r.xsd"/>
    <import namespace="urn:mpeg:mpeg21:2002:01-DII-NS" schemaLocation="dii.xsd"/>
    <import namespace="urn:mpeg:mpeg21:2004:01-IPMPINFO-NS" schemaLocation="ipmpinfo.xsd"/>
```

Additionally, the following line should be appended to the resulting schema document in order to obtain a well-formed XML document.

```
  </schema>
```

8.3 IPMPGeneralInfoDescriptor

The ipmpinfo:IPMPGeneralInfoDescriptor is the root element of an IPMPGeneralDescriptor instance document. The ipmpinfo:IPMPGeneralInfoDescriptor root element may contain a ipmpinfo:ToolList element, ipmpinfo:LicenseCollection element and/or dsig:Signature element.

--`,,```,,,,````-`-`,,`,,`,`,,`---

© ISO/IEC 2006 – All rights reserved
Copyright International Organization for Standardization
Provided by IHS under license with ISO
No reproduction or networking permitted without license from IHS
Not for Resale

8.3.1 Syntax

Diagram	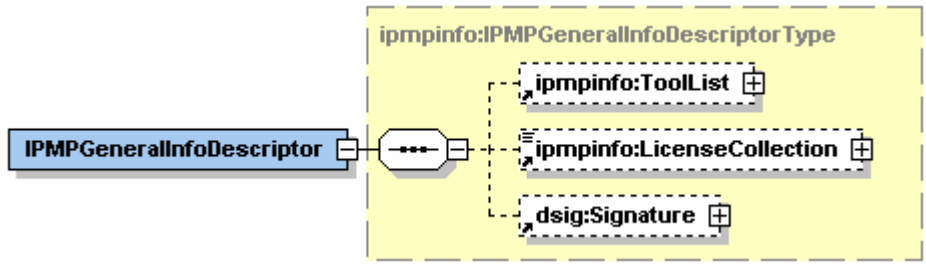
Children	<ToolList> <LicenseCollection> <Signature>
Source	<element name="IPMPGeneralInfoDescriptor" type="ipmpinfo:IPMPGeneralInfoDescriptorType"/> <complexType name="IPMPGeneralInfoDescriptorType"> <sequence> <element ref="ipmpinfo:ToolList" minOccurs="0"/> <element ref="ipmpinfo:LicenseCollection" minOccurs="0"/> <element ref="dsig:Signature" minOccurs="0"/> <!--Signature for the IPMPGeneralInfoDescriptor element and children --> </sequence> </complexType>

8.3.2 Semantics

The ipmpinfo:IPMPGeneralInfoDescriptor element is the container for a list of required IPMP tools and a collection of licenses.

8.3.3 Example

This example shows how the ipmpinfo:IPMPGeneralInfoDescriptor element can be used to carry the information related to the list of required IPMP tools and to the collection of licenses each one of them identifying its own target.

```
<ipmpinfo:IPMPGeneralInfoDescriptor>
    <ipmpinfo:ToolList>
         <ipmpinfo:ToolDescription localID="Tool1"> ... </ipmpinfo:ToolDescription>
         <ipmpinfo:ToolDescription localID="Tool2"> ... </ipmpinfo:ToolDescription>
         <ipmpinfo:ToolDescription localID="Tool3"> ... </ipmpinfo:ToolDescription>
    </ipmpinfo:ToolList>
    <ipmpinfo:LicenseCollection> ... </ ipmpinfo:LicenseCollection>
</ipmpinfo:IPMPGeneralInfoDescriptor>
```

8.4 ToolList

8.4.1 Introduction

The ipmpinfo:ToolList element identifies the IPMP Tools required to process and unprotect the object. It includes a list of IPMP tools.

Validation Rule:

— For a given ipmpinfo:ToolList element, it shall not contain more than one ipmpinfo:ToolDescription element that has attribute localID with the same value.

--`,,```,,,,````-`-`,,`,,`,`,,`---
© ISO/IEC 2006 – All rights reserved
Copyright International Organization for Standardization
Provided by IHS under license with ISO
No reproduction or networking permitted without license from IHS
Not for Resale

8.4.2 Syntax

Diagram	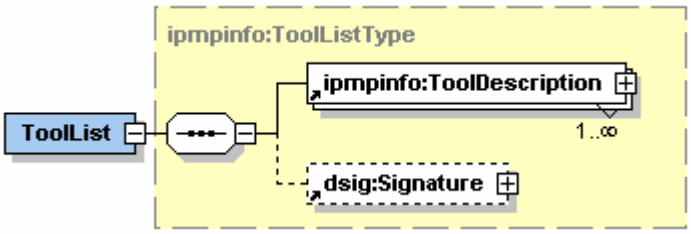
Children	<ToolDescription> <Signature>
Used by	<IPMPGeneralInfoDescriptor>
Source	<element name="ToolList" type="ipmpinfo:ToolListType"/> <complexType name="ToolListType"> <sequence> <element ref="ipmpinfo:ToolDescription" maxOccurs="unbounded"/> <element ref="dsig:Signature" minOccurs="0"/> <!—Signature for the ToolList element and children → </sequence> </complexType>

8.4.3 Semantics

The ipmpinfo:ToolList element describes a list of the necessary tools to access the protected content.

8.4.4 ToolDescription

8.4.4.1 Syntax

Diagram	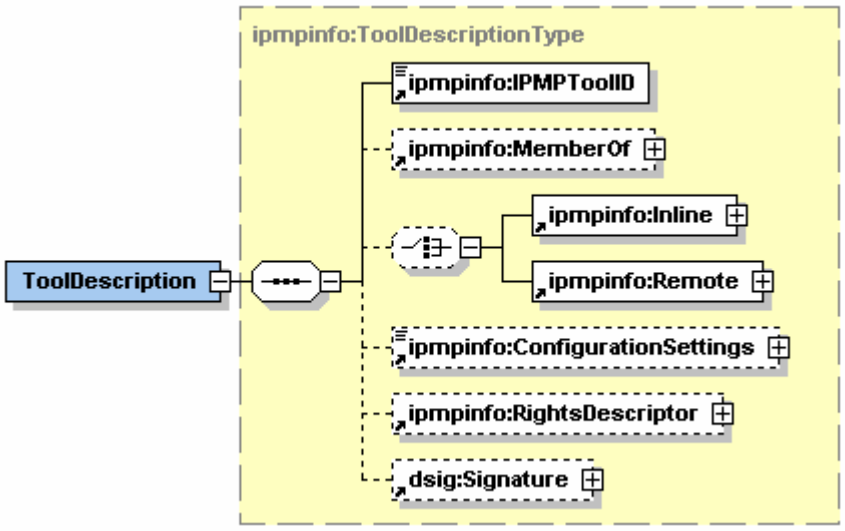			
Children	<IPMPToolID> <MemberOf> <Inline> <Remote> <ConfigurationSettings> <RightsDescriptor> <Signature>			
Used by	<ToolList>			
Attributes	**Name**	**Type**	**Use**	**Semantics**

Copyright International Organization for Standardization
Provided by IHS under license with ISO
No reproduction or networking permitted without license from IHS
© ISO/IEC 2006 – All rights reserved
Not for Resale

	localID	ID	Required	A local identifier for the tool. localID attribute of the ToolDescription element shall be unique among tools in the same ToolList so that it can be uniquely referred from Tool element. In the case of the IPMPGeneralInfoDescriptor should be carried in a Descriptor of the outermost element excepting the DIDL (or DIDLInfo or Declarations) element of the DIDL document. Local IDs must be unique within a Digital Item.
Source	<element name="ToolDescription" type="ipmpinfo:ToolDescriptionType"/> <complexType name="ToolDescriptionType"> <sequence> <element ref="ipmpinfo:IPMPToolID"/> <element ref="ipmpinfo:MemberOf" minOccurs="0"/> <choice minOccurs="0"> <element ref="ipmpinfo:Inline"/> <element ref="ipmpinfo:Remote"/> </choice> <element ref="ipmpinfo:ConfigurationSettings" minOccurs="0"/> <element ref="ipmpinfo:RightsDescriptor" minOccurs="0"/> <element ref="dsig:Signature" minOccurs="0"/> </sequence> <attribute name="localID" type="ID" use="required"/> </complexType>			

8.4.4.2 Semantics

The ipmpinfo:ToolDescription element describes the IPMP tool. One ipmpinfo:ToolDescription defines one tool.

Validation Rule:

— If an ipmpinfo:ToolDescription element has a child ipmpinfo:MemberOf element, then for each ipmpinfo:AlternateGroup element that has the attribute groupID with value x, then there shall exist another ipmpinfo:ToolDescription element with that has a child ipmpinfo:MemberOf element with an ipmpinfo:AlternateGroup with the attribute groupID the same value (x).

8.4.4.3 IPMPToolID

8.4.4.3.1 Syntax

Refer to subclause 7.4.4.4.1 for the syntax of ipmpinfo:IPMPToolID element.

8.4.4.3.2 Semantics

The ipmpinfo:IPMPToolID element represents the universally unique identifier for an IPMP tool.

8.4.4.4 MemberOf

8.4.4.4.1 Syntax

Diagram	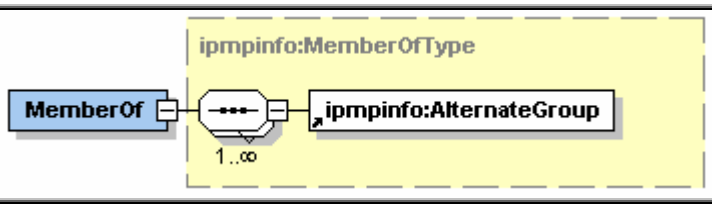
Children	<AlternateGroup>
Used by	<ToolDescription>

© ISO/IEC 2006 – All rights reserved
Copyright International Organization for Standardization
Provided by IHS under license with ISO
No reproduction or networking permitted without license from IHS
Not for Resale

Source	<element name="MemberOf" type="ipmpinfo:MemberOfType"/> <complexType name="MemberOfType"> <sequence maxOccurs="unbounded"> <element ref="ipmpinfo:AlternateGroup"/> </sequence> </complexType>

8.4.4.4.2 Semantics

The ipmpinfoinfo:MemberOf element describes the group (or groups) to which the IPMP tool belongs.

8.4.4.4.3 AlternateGroup

The ipmpinfo:AlternateGroup element identifies the group of tools that serve as alternative for this IPMP tool.

8.4.4.4.3.1 Syntax

Diagram				
Used by	<MemberOf>			
Attributes	**Name**	**Type**	**Use**	**Semantics**
	groupID	positiveInteger	Required	Identifier for the alternative tool group.
Source	<element name="AlternateGroup" type="ipmpinfo:AlternateGroupType"/> <complexType name="AlternateGroupType"> <attribute name="groupID" type="positiveInteger" use="required"/> </complexType>			

8.4.4.4.3.2 Semantics

The ipmpinfo:AlternateGroup element identifies the group in which this tool can be an alternative tool for the other members of the group. Tools whose AlternateGroup's groupID attribute have same value are member of the same alternate group. Hence they can serve as alternatives to each other.

8.4.4.4.3.3 Example

The example below shows a TooList consists of 4 Tools: Tool1, Tool2, Tool3, and Tool4. Tool1 and Tool2 are in the same group (group 1). Tool3 and Tool4 are in the same group (group 2). In the case of Tool1 is not available or cannot be retrieved, Tool2 can be used instead, and vice versa. The same case can be applied to Tool3 and Tool4 as well.

```
<ipmpinfo:ToolList>
    <ipmpinfo:ToolDescription localID="Tool1">
        <ipmpinfo:IPMPToolID>urn:mpegRA:mpeg21:IPMP:ABC002:56:79</ipmpinfo:IPMPToolID>
        <ipmpinfo:Remote ref="urn:IPMPToolsServer:MyEnc002-9090"/>
        <MemberOf>
            <AlternateGroup GroupID="1"/>
        <MemberOf>
    </ipmpinfo:ToolDescription>
    <ipmpinfo:ToolDescription localID="Tool2">
        <ipmpinfo:IPMPToolID>urn:mpegRA:mpeg21:IPMP:ABC003:77:29</ipmpinfo:IPMPToolID>
        <ipmpinfo:Remote ref="urn:IPMPToolsServer:PublicEnc003-3484"/>
        <MemberOf>
            <AlternateGroup GroupID="1"/>
        <MemberOf>
```

--`,,```,,,,````-`-`,,`,,`,`,,`---

© ISO/IEC 2006 – All rights reserved
Copyright International Organization for Standardization
Provided by IHS under license with ISO
No reproduction or networking permitted without license from IHS
Not for Resale

```
    </ipmpinfo:ToolDescription>
    <ipmpinfo:ToolDescription localID="Tool3">
        <ipmpinfo:IPMPToolID>urn:mpegRA:mpeg21:IPMP:ABC004:22:79</ipmpinfo:IPMPToolID>
        <ipmpinfo:Remote ref="urn:IPMPToolsServer:Free-RightIntprt"/>
        <MemberOf>
            <AlternateGroup GroupID="2"/>
        <MemberOf>
    </ipmpinfo:ToolDescription>
    <ipmpinfo:ToolDescription localID="Tool4">
        <ipmpinfo:IPMPToolID>urn:mpegRA:mpeg21:IPMP:ABC005:77:29</ipmpinfo:IPMPToolID>
        <ipmpinfo:Remote ref="urn:IPMPToolsServer:Premium-RightIntprt"/>
        <MemberOf>
            <AlternateGroup GroupID="2"/>
        <MemberOf>
    </ipmpinfo:ToolDescription>
</ipmpinfo:ToolList>
```

The value of groupID attribute does not necessarily be unique since one or more Tools can have the same value (that is the rationale why the data type of groupID is positiveInteger, not ID).

8.4.4.5 Inline

8.4.4.5.1 Syntax

Refer to subclause 7.4.4.5.1 for the syntax of ipmpinfo:Inline element.

8.4.4.5.1.1 Semantics

The Inline element is a container to carry the binary of the tool.

8.4.4.5.2 Binary

8.4.4.5.2.1 Syntax

Refer to subclause 7.4.4.5.3.1 for the syntax of ipmpinfo:Binary element.

8.4.4.5.2.2 Semantics

The ipmpinfo:Binary element contains a Base64-encoded IPMP tool which is carried in IPMP General Information Descriptor.

8.4.4.5.3 Signature

8.4.4.5.3.1 Syntax

Refer to subclause 7.4.4.5.4.1 for the syntax of `Signature` element.

8.4.4.5.3.2 Semantics

The dsig:Signature element contains the signature for the `Inline` element which is carried in IPMP General Information Descriptor.

The semantics for all elements under `Signature` should refer to [XMLDSIG].

© ISO/IEC 2006 – All rights reserved

Copyright International Organization for Standardization
Provided by IHS under license with ISO
No reproduction or networking permitted without license from IHS
Not for Resale

8.4.4.6 Remote

8.4.4.6.1 Syntax

Refer to subclause 7.4.4.6.1 for the syntax of ipmpinfo:Remote element.

8.4.4.6.2 Semantics

The ipmpinfo:Remote element contains the remote location from where the tool can be retrieved.

8.4.4.6.3 Signature

8.4.4.6.3.1 Syntax

Refer to subclause 7.4.4.5.4.1 for the syntax of Signature element.

8.4.4.6.3.2 Semantics

The dsig:Signature element contains the signature for the `Remote` element which is carried in IPMP General Information Descriptor.

The semantics for all elements under Signature should refer to [XMLDSIG].

8.4.4.7 ConfigurationSettings

8.4.4.7.1 Syntax

Refer to subclause 7.4.4.7.1 for the syntax of ipmpinfo:ConfigurationSettings element.

8.4.4.7.2 Semantics

The ipmpinfo:ConfiguratinSettings element is a container to carry detailed configuration settings for a specific IPMP tool.

8.4.4.8 RightsDescriptor

8.4.4.8.1 Introduction

The ipmpinfo:RightsDescriptor element contains information about the license that governs the IPMP tool. The existence of ipmpinfo:RightsDescriptor under the ipmpinfo:ToolDescription element indicates there is governance for the usage of the IPMP tool.

The ipmpinfo:RightsDescriptor may contain an ipmpinfo:IPMPInfoDescriptor element and a License, ipmpinfo:LicenseReference or ipmpinfo: LicenseService elements.

The ipmpinfo:IPMPInfoDescriptor element contains the IPMP information related to the protected license(s). Refer to ipmpinfo:IPMPInfoDescriptor element in subclause 7.3.

8.4.4.8.2 Syntax

Refer to subclause 7.4.7.1 for the syntax of ipmpinfo:RightsDescriptor element.

8.4.4.8.3 Semantics

The ipmpinfo:RightsDescriptor element contains information about the license that governs the IPMP tool.

© ISO/IEC 2006 – All rights reserved
Copyright International Organization for Standardization
Provided by IHS under license with ISO
No reproduction or networking permitted without license from IHS
Not for Resale

8.4.4.9 Signature

8.4.4.9.1 Syntax

Refer to subclause 7.4.4.5.4.1 for the syntax of Signature element.

8.4.4.9.2 Semantics

The dsig:Signature element contains the signature for the ipmpinfo:ToolDescription element.

The semantics for all elements under Signature should refer to [XMLDSIG].

8.4.5 Signature

8.4.5.1 Syntax

Refer to subclause 7.4.4.5.4.1 for the syntax of Signature element.

8.4.5.2 Semantics

The dsig:Signature element contains the signature for the ipmpinfo:ToolList element.

The semantics for all elements under Signature should refer to [XMLDSIG].

8.4.6 Example

The ipmpinfo:ToolList element in the ipmpinfo:IPMPGeneralInfoDescriptor is used to define the list of IPMP tools that the terminal requires to consume the protected content. This example shows how a set of IPMP tools can be defined within the ipmpinfo:ToolList element. In this element the general information to define each one of the IPMP tools is also declared.

```
<ipmpinfo:ToolList>
    <ipmpinfo:ToolDescription localID="Tool1">
        <ipmpinfo:IPMPToolID>urn:mpegRA:mpeg21:IPMP:ABC002:56:79</ipmpinfo:IPMPToolID>
        <ipmpinfo:Remote ref="urn:IPMPToolsServer:ToolPartEnc002-9090"/>
        <ipmpinfo:ConfigurationSettings> ... </ipmpinfo:ConfigurationSettings>
    </ipmpinfo:ToolDescription>
    <ipmpinfo:ToolDescription localID="Tool2">
        <ipmpinfo:IPMPToolID>urn:mpegRA:mpeg21:IPMP:ABC003:77:29</ipmpinfo:IPMPToolID>
        <ipmpinfo:Remote ref="urn:IPMPToolsServer:ToolEnc003-3484"/>
        <ipmpinfo:ConfigurationSettings> ... </ipmpinfo:ConfigurationSettings>
    </ipmpinfo:ToolDescription>
</ipmpinfo:ToolList>
```

--`,,```,,,,````-`-`,,`,,`,`,,`---

© ISO/IEC 2006 – All rights reserved

Copyright International Organization for Standardization
Provided by IHS under license with ISO
No reproduction or networking permitted without license from IHS
Not for Resale

8.5 LicenseCollection

8.5.1 Syntax

Diagram	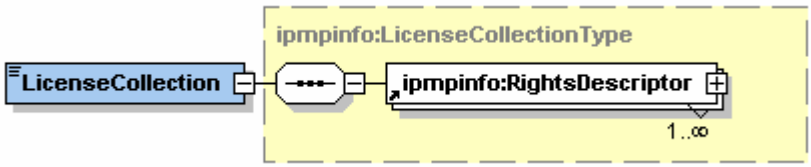
Children	<RightsDescriptor>
Source	<element name="LicenseCollection" type="ipmpinfo:LicenseCollectionType"/> <complexType name="LicenseCollectionType" mixed="true"> <sequence> <element ref="ipmpinfo:RightsDescriptor" maxOccurs="unbounded"/> </sequence> </complexType>

8.5.2 Semantics

The ipmpinfo:LicenseCollection element contains a collection of licenses each of which identifies its own target.

8.5.3 RightsDescriptor

8.5.3.1 Syntax

Refer to subclause 7.4.7.1 for the syntax of ipmpinfo:RightsDescriptor element.

8.5.3.2 Semantics

The ipmpinfo:RightsDescriptor element contains information about the license. If the license is protected, the ipmpinfo:RightsDescriptor element also contains IPMP information related to the protected license.

8.5.4 Example

The ipmpinfo:LicenseCollection element within the ipmpinfo:IPMPGeneralInfoDescriptor contains a collection of licenses that identify the target of their governance. This element can also contain licenses associated with the whole IPMP protected DID. The example shows how a collection of licenses, each of which identifies their target of governance, can be placed within the ipmpinfo:IPMPGeneralInfoDescriptor in an IPMP protected DID.

--`,,```,,,,````-`-`,,`,,`,`,,`---

© ISO/IEC 2006 – All rights reserved
Copyright International Organization for Standardization
Provided by IHS under license with ISO
No reproduction or networking permitted without license from IHS
Not for Resale

```
<ipmpinfo:LicenseCollection>
    <ipmpinfo:RightsDescriptor>
        <ipmpinfo:License>
            <r:license>
                <r:grant>
                  <mx:play/>
                  <mx:diReference>
                    <mx:identifier>urn:grid:a1-abcde-9630741852-f</mx:identifier>
                  </mx:diReference>
                </r:grant>
            </r:license>
        </ipmpinfo:License>
    </ipmpinfo:RightsDescriptor>
    <ipmpinfo:RightsDescriptor>
        <ipmpinfo:License> ... </ipmpinfo:License>
    </ipmpinfo:RightsDescriptor>
</ipmpinfo:LicenseCollection>
```

8.6 Signature

8.6.1 Syntax

Refer to subclause 7.4.4.5.4.1 for the syntax of Signature element.

8.6.2 Semantics

The dsig:Signature element contains the signature for the ipmpinfo:IPMPGeneralInfoDescriptor element. The semantics for all elements under Signature should refer to [XMLDSIG].

© ISO/IEC 2006 – All rights reserved
Copyright International Organization for Standardization
Provided by IHS under license with ISO
No reproduction or networking permitted without license from IHS
Not for Resale

Annex A
(informative)

IPMP DIDL Schema

```
<?xml version="1.0"?>
<!--=======================================-->
<!--=====Schema for IPMP DIDL Types=====-->
<!--=======================================-->
<schema targetNamespace="urn:mpeg:mpeg21:2004:01-IPMPDIDL-NS" elementFormDefault="qualified"
    attributeFormDefault="unqualified" version="0.01" xmlns="http://www.w3.org/2001/XMLSchema"
    xmlns:didmodel="urn:mpeg:mpeg21:2002:02-DIDMODEL-NS" xmlns:ipmpdidl="urn:mpeg:mpeg21:2004:01-
IPMPDIDL-NS">
    <import schemaLocation="didmodel.xsd" namespace="urn:mpeg:mpeg21:2002:02-DIDMODEL-NS"/>
    <import schemaLocation="didl.xsd" namespace="urn:mpeg:mpeg21:2002:02-DIDL-NS"/>
    <!--============================================================
             All element types corresponding to the DID model contain:
            (i)  a maximum of one ipmpdidl:Identifier element, into which an appropriate identifier
for the protected Representation may be placed
            (ii) one ipmpdidl:Info element, into which information about the governance is placed
            (iii) one ipmpdidl:Contents element, into which the governed Contents is placed
    ============================================================-->

    <element name="Container" type="ipmpdidl:ContainerType" substitutionGroup="didmodel:Container"/>
    <complexType name="ContainerType">
        <complexContent>
            <extension base="didmodel:ContainerType">
                <sequence>
                    <group ref="ipmpdidl:IPMPDIDLChildGroup"/>
                </sequence>
            </extension>
        </complexContent>
    </complexType>
    <element name="Item" type="ipmpdidl:ItemType" substitutionGroup="didmodel:Item"/>
    <complexType name="ItemType">
        <complexContent>
            <extension base="didmodel:ItemType">
                <sequence>
                    <group ref="ipmpdidl:IPMPDIDLChildGroup"/>
                </sequence>
            </extension>
        </complexContent>
    </complexType>
    <element name="Descriptor" type="ipmpdidl:DescriptorType"
substitutionGroup="didmodel:Descriptor"/>
    <complexType name="DescriptorType">
        <complexContent>
            <extension base="didmodel:DescriptorType">
                <sequence>
                    <group ref="ipmpdidl:IPMPDIDLChildGroup"/>
                </sequence>
            </extension>
        </complexContent>
    </complexType>
    <element name="Statement" type="ipmpdidl:StatementType" substitutionGroup="didmodel:Statement"/>
    <complexType name="StatementType" mixed="true">
        <complexContent>
            <extension base="didmodel:StatementType">
                <sequence>
                    <group ref="ipmpdidl:IPMPDIDLChildGroup"/>
                </sequence>
            </extension>
        </complexContent>
    </complexType>
    <element name="Component" type="ipmpdidl:ComponentType" substitutionGroup="didmodel:Component"/>
    <complexType name="ComponentType">
        <complexContent>
            <extension base="didmodel:ComponentType">
                <sequence>
                    <group ref="ipmpdidl:IPMPDIDLChildGroup"/>
```


© ISO/IEC 2006 – All rights reserved
Copyright International Organization for Standardization
Provided by IHS under license with ISO
No reproduction or networking permitted without license from IHS
Not for Resale

```
            </sequence>
        </extension>
    </complexContent>
</complexType>
<element name="Anchor" type="ipmpdidl:AnchorType" substitutionGroup="didmodel:Anchor"/>
<complexType name="AnchorType">
    <complexContent>
        <extension base="didmodel:AnchorType">
            <sequence>
                <group ref="ipmpdidl:IPMPDIDLChildGroup"/>
            </sequence>
        </extension>
    </complexContent>
</complexType>
<element name="Fragment" type="ipmpdidl:FragmentType" substitutionGroup="didmodel:Fragment"/>
<complexType name="FragmentType" mixed="true">
    <complexContent>
        <extension base="didmodel:FragmentType">
            <sequence>
                <group ref="ipmpdidl:IPMPDIDLChildGroup"/>
            </sequence>
        </extension>
    </complexContent>
</complexType>
<element name="Condition" type="ipmpdidl:ConditionType" substitutionGroup="didmodel:Condition"/>
<complexType name="ConditionType">
    <complexContent>
        <extension base="didmodel:ConditionType">
            <sequence>
                <group ref="ipmpdidl:IPMPDIDLChildGroup"/>
            </sequence>
        </extension>
    </complexContent>
</complexType>
<element name="Choice" type="ipmpdidl:ChoiceType" substitutionGroup="didmodel:Choice"/>
<complexType name="ChoiceType">
    <complexContent>
        <extension base="didmodel:ChoiceType">
            <sequence>
                <group ref="ipmpdidl:IPMPDIDLChildGroup"/>
            </sequence>
        </extension>
    </complexContent>
</complexType>
<element name="Selection" type="ipmpdidl:SelectionType" substitutionGroup="didmodel:Selection"/>
<complexType name="SelectionType">
    <complexContent>
        <extension base="didmodel:SelectionType">
            <sequence>
                <group ref="ipmpdidl:IPMPDIDLChildGroup"/>
            </sequence>
        </extension>
    </complexContent>
</complexType>
<element name="Resource" type="ipmpdidl:ResourceType" substitutionGroup="didmodel:Resource"/>
<complexType name="ResourceType" mixed="true">
    <complexContent mixed="true">
        <extension base="didmodel:ResourceType">
            <sequence>
                <group ref="ipmpdidl:IPMPDIDLChildGroup"/>
            </sequence>
        </extension>
    </complexContent>
</complexType>
<element name="Annotation" type="ipmpdidl:AnnotationType"
substitutionGroup="didmodel:Annotation"/>
<complexType name="AnnotationType">
    <complexContent>
        <extension base="didmodel:AnnotationType">
            <sequence>
                <group ref="ipmpdidl:IPMPDIDLChildGroup"/>
            </sequence>
        </extension>
    </complexContent>
</complexType>
<element name="Assertion" type="ipmpdidl:AssertionType" substitutionGroup="didmodel:Assertion"/>
```

© ISO/IEC 2006 – All rights reserved

Copyright International Organization for Standardization
Provided by IHS under license with ISO
No reproduction or networking permitted without license from IHS
Not for Resale

```
    <complexType name="AssertionType">
        <complexContent>
            <extension base="didmodel:AssertionType">
                <sequence>
                    <group ref="ipmpdidl:IPMPDIDLChildGroup"/>
                </sequence>
            </extension>
        </complexContent>
    </complexType>
    <!-- elements from here onward are unique to the IPMP DIDL Representation-->
    <group name="IPMPDIDLChildGroup">
        <sequence>
            <element ref="ipmpdidl:Identifier" minOccurs="0"/>
            <element ref="ipmpdidl:Info"/>
            <element ref="ipmpdidl:ContentInfo" minOccurs="0"/>
            <element ref="ipmpdidl:Contents"/>
        </sequence>
    </group>
    <element name="Contents">
        <complexType mixed="true">
            <sequence>
                <any namespace="##any" processContents="lax" minOccurs="0"/>
            </sequence>
            <attribute name="ref" type="anyURI"/>
        </complexType>
    </element>
    <element name="Info">
        <complexType mixed="true">
            <sequence>
                <any namespace="##any" processContents="lax" minOccurs="0"/>
            </sequence>
        </complexType>
    </element>
    <element name="Identifier">
        <complexType mixed="true">
            <sequence>
                <any namespace="##any" processContents="lax" minOccurs="0"/>
            </sequence>
        </complexType>
    </element>
    <element name="ContentInfo">
        <complexType mixed="true">
            <sequence>
                <any namespace="##any" processContents="lax" minOccurs="0"/>
            </sequence>
        </complexType>
    </element>
    <element name="ProtectedAsset" type="ipmpdidl:ProtectedAssetType"/>
    <complexType name="ProtectedAssetType">
        <sequence>
            <group ref="ipmpdidl:IPMPDIDLChildGroup"/>
        </sequence>
        <attribute name="mimeType" type="string" use="required"/>
    </complexType>
</schema>
```


© ISO/IEC 2006 – All rights reserved
Copyright International Organization for Standardization
Provided by IHS under license with ISO
No reproduction or networking permitted without license from IHS
Not for Resale

Annex B
(informative)

IPMP Information Schema

```
<?xml version="1.0"?>
<schema targetNamespace="urn:mpeg:mpeg21:2004:01-IPMPINFO-NS"
xmlns="http://www.w3.org/2001/XMLSchema" xmlns:ipmpinfo="urn:mpeg:mpeg21:2004:01-IPMPINFO-NS"
xmlns:dii="urn:mpeg:mpeg21:2002:01-DII-NS" xmlns:r="urn:mpeg:mpeg21:2003:01-REL-R-NS"
xmlns:dsig="http://www.w3.org/2000/09/xmldsig#" elementFormDefault="qualified"
attributeFormDefault="unqualified" version="0.01">
    <import namespace="http://www.w3.org/2000/09/xmldsig#"
schemaLocation="http://www.w3.org/TR/2002/REC-xmldsig-core-20020212/xmldsig-core-schema.xsd"/>
    <import namespace="urn:mpeg:mpeg21:2003:01-REL-R-NS" schemaLocation="rel-r.xsd"/>
    <import namespace="urn:mpeg:mpeg21:2002:01-DII-NS" schemaLocation="dii.xsd"/>
    <element name="IPMPInfoDescriptor" type="ipmpinfo:IPMPInfoDescriptorType"/>
    <complexType name="IPMPInfoDescriptorType">
        <annotation>
            <documentation>The RightsDescriptor under this element is applied to the associated asset</documentation>
        </annotation>
        <sequence>
            <element ref="ipmpinfo:Tool" minOccurs="0" maxOccurs="unbounded"/>
            <element ref="ipmpinfo:RightsDescriptor" minOccurs="0" maxOccurs="unbounded"/>
            <element ref="dsig:Signature" minOccurs="0"/>
            <!--Rights for the unprotect operation-->
        </sequence>
    </complexType>
    <element name="Tool" type="ipmpinfo:ToolType"/>
    <complexType name="ToolType">
        <sequence>
            <choice>
                <element ref="ipmpinfo:ToolBaseDescription"/>
                <element ref="ipmpinfo:ToolRef"/>
            </choice>
            <element ref="ipmpinfo:InitializationSettings" minOccurs="0"/>
            <element ref="ipmpinfo:RightsDescriptor" minOccurs="0"/>
            <element ref="dsig:Signature" minOccurs="0"/>
        </sequence>
        <attribute name="order" type="positiveInteger"/>
    </complexType>
    <element name="ToolRef" type="ipmpinfo:ToolRef"/>
    <complexType name="ToolRef">
        <attribute name="localidref" type="IDREF" use="required"/>
    </complexType>
    <element name="ToolBaseDescription" type="ipmpinfo:ToolBaseDescriptionType"/>
    <complexType name="ToolBaseDescriptionType">
        <sequence>
            <element ref="ipmpinfo:IPMPToolID"/>
            <choice minOccurs="0">
                <element ref="ipmpinfo:Inline"/>
                <element ref="ipmpinfo:Remote"/>
            </choice>
            <element ref="ipmpinfo:ConfigurationSettings" minOccurs="0"/>
            <element ref="dsig:Signature" minOccurs="0"/>
        </sequence>
    </complexType>
    <element name="IPMPToolID" type="anyURI"/>
    <element name="Inline" type="ipmpinfo:InlineType"/>
    <complexType name="InlineType">
        <sequence>
            <element ref="ipmpinfo:Binary"/>
            <element ref="dsig:Signature" minOccurs="0"/>
        </sequence>
    </complexType>
    <element name="Binary" type="base64Binary"/>
    <element name="Remote" type="ipmpinfo:RemoteType"/>
    <complexType name="RemoteType">
        <sequence>
            <element ref="dsig:Signature" minOccurs="0"/>
        </sequence>
```

© ISO/IEC 2006 – All rights reserved

Copyright International Organization for Standardization
Provided by IHS under license with ISO
No reproduction or networking permitted without license from IHS
Not for Resale

```
    <attribute name="ref" type="anyURI"/>
  </complexType>
  <element name="ConfigurationSettings" type="ipmpinfo:ConfigurationSettingsType"/>
  <complexType name="ConfigurationSettingsType" mixed="true">
    <sequence>
      <element ref="ipmpinfo:Configuration"/>
      <element ref="ipmpinfo:Update" minOccurs="0"/>
    </sequence>
  </complexType>
  <element name="Configuration" type="ipmpinfo:ConfigurationType"/>
  <complexType name="ConfigurationType" mixed="true">
    <sequence>
      <any namespace="##any" processContents="lax" minOccurs="0"/>
    </sequence>
  </complexType>
  <element name="Update" type="ipmpinfo:UpdateType"/>
  <complexType name="UpdateType">
    <sequence>
      <element ref="ipmpinfo:Location" maxOccurs="unbounded"/>
      <element ref="ipmpinfo:ScheduledUpdateTime" minOccurs="0"/>
      <element ref="ipmpinfo:SupportedPlatform" minOccurs="0" maxOccurs="unbounded"/>
      <element ref="dsig:Signature" minOccurs="0"/>
    </sequence>
  </complexType>
  <element name="Location" type="ipmpinfo:RemoteType"/>
  <element name="ScheduledUpdateTime" type="ipmpinfo:ScheduledUpdateTimeType"/>
  <complexType name="ScheduledUpdateTimeType">
    <simpleContent>
      <extension base="dateTime">
        <attribute name="periodic" type="duration" use="optional"/>
      </extension>
    </simpleContent>
  </complexType>
  <element name="SupportedPlatform" type="ipmpinfo:SupportedPlatformType"/>
  <complexType name="SupportedPlatformType">
    <sequence>
      <any namespace="##any" processContents="lax" minOccurs="0"/>
    </sequence>
  </complexType>
  <element name="RightsDescriptor" type="ipmpinfo:RightsDescriptorType"/>
  <complexType name="RightsDescriptorType">
    <sequence>
      <element ref="ipmpinfo:IPMPInfoDescriptor" minOccurs="0"/>
      <choice minOccurs="0">
        <element ref="ipmpinfo:License"/>
        <element ref="ipmpinfo:LicenseReference"/>
        <element ref="ipmpinfo:LicenseService"/>
      </choice>
    </sequence>
  </complexType>
  <element name="License" type="ipmpinfo:LicenseType"/>
  <complexType name="LicenseType" mixed="true">
    <sequence>
      <any namespace="##any" processContents="lax" minOccurs="0"/>
    </sequence>
  </complexType>
  <element name="LicenseService" type="ipmpinfo:LicenseServiceType"/>
  <complexType name="LicenseServiceType" mixed="true">
    <sequence>
      <any namespace="##any" processContents="lax" minOccurs="0"/>
    </sequence>
  </complexType>
  <element name="LicenseReference" type="ipmpinfo:LicenseReferenceType"/>
  <complexType name="LicenseReferenceType">
    <simpleContent>
      <extension base="anyURI"/>
    </simpleContent>
  </complexType>
  <element name="InitializationSettings" type="ipmpinfo:InitializationSettingsType"/>
  <complexType name="InitializationSettingsType" mixed="true">
    <sequence>
      <element ref="ipmpinfo:IPMPInfoDescriptor" minOccurs="0"/>
      <element ref="ipmpinfo:InitializationData"/>
    </sequence>
  </complexType>
  <element name="InitializationData" type="ipmpinfo:InitializationDataType"/>
```


© ISO/IEC 2006 – All rights reserved
Copyright International Organization for Standardization
Provided by IHS under license with ISO
No reproduction or networking permitted without license from IHS
Not for Resale

```
    <complexType name="InitializationDataType" mixed="true">
        <sequence>
            <any namespace="##any" processContents="lax" minOccurs="0"/>
        </sequence>
    </complexType>
</schema>
```

© ISO/IEC 2006 – All rights reserved

Copyright International Organization for Standardization
Provided by IHS under license with ISO
No reproduction or networking permitted without license from IHS
Not for Resale

Annex C
(informative)

IPMP General Information Schema

```
<?xml version="1.0"?>
<schema targetNamespace="urn:mpeg:mpeg21:2004:01-IPMPINFO-NS"
xmlns="http://www.w3.org/2001/XMLSchema" xmlns:ipmpinfo="urn:mpeg:mpeg21:2004:01-IPMPINFO-NS"
xmlns:dii="urn:mpeg:mpeg21:2002:01-DII-NS" xmlns:r="urn:mpeg:mpeg21:2003:01-REL-R-NS"
xmlns:dsig="http://www.w3.org/2000/09/xmldsig#" elementFormDefault="qualified"
attributeFormDefault="unqualified" version="0.01">
    <import namespace="http://www.w3.org/2000/09/xmldsig#"
schemaLocation="http://www.w3.org/TR/2002/REC-xmldsig-core-20020212/xmldsig-core-schema.xsd"/>
    <include schemaLocation="ipmpinfo.xsd"/>
    <import namespace="urn:mpeg:mpeg21:2003:01-REL-R-NS" schemaLocation="rel-r.xsd"/>
    <import namespace="urn:mpeg:mpeg21:2002:01-DII-NS" schemaLocation="dii.xsd"/>
    <element name="IPMPGeneralInfoDescriptor" type="ipmpinfo:IPMPGeneralInfoDescriptorType"/>
    <complexType name="IPMPGeneralInfoDescriptorType">
        <sequence>
            <element ref="ipmpinfo:ToolList" minOccurs="0"/>
            <element ref="ipmpinfo:LicenseCollection" minOccurs="0"/>
            <element ref="dsig:Signature" minOccurs="0"/>
            <!--Signature for the IPMPGeneralInfoDescriptor element and children -->
        </sequence>
    </complexType>
    <element name="ToolList" type="ipmpinfo:ToolListType"/>
    <complexType name="ToolListType">
        <sequence>
            <element ref="ipmpinfo:ToolDescription" maxOccurs="unbounded"/>
            <element ref="dsig:Signature" minOccurs="0"/>
            <!--Signature for the ToolList element and children -->
        </sequence>
    </complexType>
    <element name="ToolDescription" type="ipmpinfo:ToolDescriptionType"/>
    <complexType name="ToolDescriptionType">
        <sequence>
            <element ref="ipmpinfo:IPMPToolID"/>
            <element ref="ipmpinfo:MemberOf" minOccurs="0"/>
            <choice minOccurs="0">
                <element ref="ipmpinfo:Inline"/>
                <element ref="ipmpinfo:Remote"/>
            </choice>
            <element ref="ipmpinfo:ConfigurationSettings" minOccurs="0"/>
            <element ref="ipmpinfo:RightsDescriptor" minOccurs="0"/>
            <element ref="dsig:Signature" minOccurs="0"/>
        </sequence>
        <attribute name="localID" type="ID" use="required"/>
    </complexType>
    <element name="MemberOf" type="ipmpinfo:MemberOfType"/>
    <complexType name="MemberOfType">
        <sequence maxOccurs="unbounded">
            <element ref="ipmpinfo:AlternateGroup"/>
        </sequence>
    </complexType>
    <element name="AlternateGroup" type="ipmpinfo:AlternateGroupType"/>
    <complexType name="AlternateGroupType">
        <attribute name="groupID" type="positiveInteger" use="required"/>
    </complexType>
    <element name="LicenseCollection" type="ipmpinfo:LicenseCollectionType"/>
    <complexType name="LicenseCollectionType" mixed="true">
        <sequence>
            <element ref="ipmpinfo:RightsDescriptor" maxOccurs="unbounded"/>
        </sequence>
    </complexType>
</schema>
```


Copyright International Organization for Standardization
Provided by IHS under license with ISO
No reproduction or networking permitted without license from IHS
© ISO/IEC 2006 – All rights reserved
Not for Resale

Annex D
(informative)

Processing IPMP DIDL Elements

The following clause does **not** constitute a normative part of the standard.

Processing of a governed Digital Item operate within a governed environment that protects the governed IPMP DIDL elements against unauthorised access.

IPMP DIDL elements are processed according to information defined in the ipmpdidl:Info child element.

DIDL structure can be protected by encapsulation in an IPMP DIDL element corresponding to the head element of the DIDL structure.

It is expected that processing will enforce the persistent nature of governance and not provide an ungoverned version of the Digital Item outside the secure environment at any time.

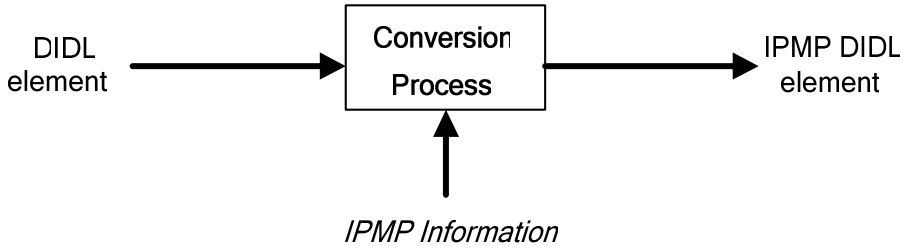

Figure D.1 — IPMP DIDL processing

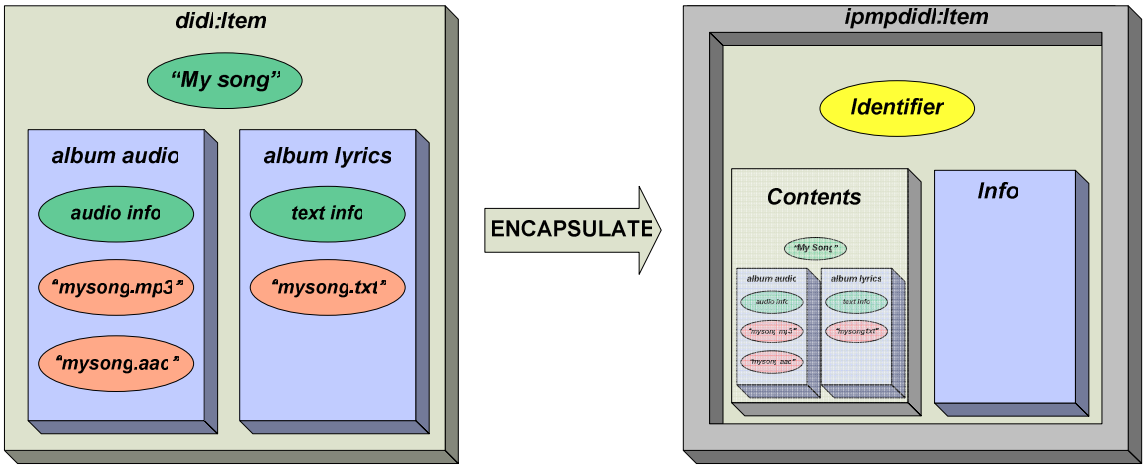

Figure D.2 — IPMP DIDL processing example

© ISO/IEC 2006 All rights reserved
Copyright International Organization for Standardization
Provided by IHS under license with ISO
No reproduction or networking permitted without license from IHS
Not for Resale

This can further be illustrated using an example:

Unprotected DIDL structure

```
<Item>
    <Descriptor>
        <Statement mimeType="text/plain">
            <dii:Identifier>IPMPid0001</dii:Identifier>
        </Statement>
    </Descriptor>
    <Component>
        <Resource ref="myPicture.png" mimeType="image/png"/>
    </Component>
</Item>
```

A DIDL element can be encapsulated in IPMP DIDL by applying, for example, the following processing.

a) Replace the DIDL element with the corresponding IPMP DIDL element. In this example the DIDL Item element is replaced by an IPMP DIDL ipmpdidl:Item element.

b) If the DIDL element has an identifier, encapsulate the identifier in an IPMP DIDL Identifier element. In this example, the DII Identifiier of the DIDL Item is encapsulated in an IPMP DIDL ipmpdidl:Identifier element.

c) If any information is required to retrieve the DIDL element content from the IPMP DIDL Contents element, encapsulate this in an IPMP DIDL Info element. In this example, at this stage the content of the DIDL element is simply encapsulated in an IPMP DIDL Contents element.

d) Encapsulate the content of the DIDL element in an IPMP DIDL Contents element.

Encapsulated in IPMP DIDL

```
<ipmpdidl:Item>
    <ipmpdidl:Identifier>
        <dii:Identifier>IPMPid0001</dii:Identifier>
    </ipmpdidl:Identifier>
    <ipmpdidl:Info>...</ipmpdidl:Info>
    <ipmpdidl:Contents>
        <Item>
            <Descriptor>
                <Statement mimeType="text/plain">
                    <dii:Identifier>IPMPid0001</dii:Identifier>
                </Statement>
            </Descriptor>
            <Component>
                <Resource ref="myPicture.png" mimeType="image/png"/>
            </Component>
        </Item>
    </ipmpdidl:Contents>
</ipmpdidl:Item>
```

The ipmpdidl:Contents may be encrypted, with a tool described in ipmpdidl:Info. The tool information would be encapsulated in the IPMP DIDL Info element at step c) above, and the encryption would occur during step d) above. In this case the structure and Contents of ipmpdidl:Contents will not be visible.

© ISO/IEC 2006 – All rights reserved
Copyright International Organization for Standardization
Provided by IHS under license with ISO
No reproduction or networking permitted without license from IHS
Not for Resale

```
<ipmpdidl:Item>
    <ipmpdidl:Identifier>
        <dii:Identifier>IPMPid0001</dii:Identifier>
    </ipmpdidl:Identifier>
    <ipmpdidl:Info>...</ipmpdidl:Info>
    <ipmpdidl:Contents>3E674F632A56BD56...</ipmpdidl:Contents>
</ipmpdidl:Item>
```

When processing an IPMP DIDL element to retrieve the DIDL element, the following is an example of the processing that might take place.

a) Parse the tool information encapsulated in the IPMP DIDL Info element.

b) Obtain an instance of the tool and configure the tool as required.

c) Apply the tool to the content of the IPMP DIDL Contents element. The result should be the original content of the encapsulated DIDL element.

d) Replace the IPMP DIDL element with the corresponding DIDL element containing the content obtained from step c) above.

© ISO/IEC 2006 – All rights reserved

Copyright International Organization for Standardization
Provided by IHS under license with ISO
No reproduction or networking permitted without license from IHS
Not for Resale

Annex E
(informative)

Examples of IPMP DIDL Elements with IPMP Information

E.1 Example 1: Protecting an Item

This example shows how an Item can be protected and governed and how is associated to it the IPMP information, in this case the IPMP Tools to unprotect it and the protected license that governs it.

```
<DIDL xmlns="urn:mpeg:mpeg21:2002:02-DIDL-NS"
      xmlns:dii="urn:mpeg:mpeg21:2002:01-DII-NS"
      xmlns:ipmpdidl="urn:mpeg:mpeg21:2004:01-IPMPDIDL-NS"
      xmlns:ipmpinfo="urn:mpeg:mpeg21:2004:01-IPMPINFO-NS"
      xmlns:r="urn:mpeg:mpeg21:2003:01-REL-R-NS"
      xmlns:enc="http://www.w3.org/2001/04/xmlenc#"
      xmlns:dsig="http://www.w3.org/2000/09/xmldsig#"
      xmlns:xsi="http://www.w3.org/2001/XMLSchema-instance">
  <ipmpdidl:Item>
    <ipmpdidl:Identifier>
      <dii:Identifier>IPMPid0001</dii:Identifier>
    </ipmpdidl:Identifier>
    <ipmpdidl:Info>
      <ipmpinfo:IPMPInfoDescriptor>
        <ipmpinfo:Tool>
          <ipmpinfo:ToolBaseDescription>
            <ipmpinfo:IPMPToolID>urn:mpegRA:mpeg21:IPMP:ABC005:77:29</ipmpinfo:IPMPToolID>
            <ipmpinfo:Remote ref="urn:IPMPToolsServer:ToolEnc005-3484"/>
          </ipmpinfo:ToolBaseDescription>
        </ipmpinfo:Tool>
        <ipmpinfo:Tool>
          <ipmpinfo:ToolBaseDescription>
            <ipmpinfo:IPMPToolID>urn:mpegRA:mpeg21:IPMP:ABC064:55:86</ipmpinfo:IPMPToolID>
            <ipmpinfo:Remote ref="urn:IPMPToolsServer:ToolWat005-6393"/>
          </ipmpinfo:ToolBaseDescription>
        </ipmpinfo:Tool>
        <ipmpinfo:RightsDescriptor>
          <ipmpinfo:License>
            <r:license>
              <r:encryptedLicense Type="http://www.w3.org/2001/04/xmlenc#Content">
                <enc:EncryptionMethod Algorithm="http://www.w3.org/2001/04/xmlenc#3des-cbc"/>
                  <dsig:KeyInfo>
                    <dsig:KeyName>SymmetricKey</dsig:KeyName>
                  </dsig:KeyInfo>
                  <enc:CipherData>
                    <enc:CipherValue>Ktd63SDfkDWEjeSdkj39872A5ToQ...</enc:CipherValue>
                  </enc:CipherData>
                </r:encryptedLicense>
              </r:license>
            </ipmpinfo:License>
          </ipmpinfo:RightsDescriptor>
        </ipmpinfo:IPMPInfoDescriptor>
      </ipmpdidl:Info>
```


© ISO/IEC 2006 – All rights reserved
Copyright International Organization for Standardization
Provided by IHS under license with ISO
No reproduction or networking permitted without license from IHS
Not for Resale

```
    <ipmpdidl:Contents>3E674F632A56BD56...</ipmpdidl:Contents>
  </ipmpdidl:Item>
</DIDL>
```

E.2 Example 2: Protecting several Items in the same DIDL

This example shows how several Items can be protected and governed and how is the IPMP information declared and the associated to them. In this example, first is defined the general IPMP information, the IPMP Tools, and then this information is associated to the correspondent governed Items.

```
<DIDL xmlns="urn:mpeg:mpeg21:2002:02-DIDL-NS"
      xmlns:dii="urn:mpeg:mpeg21:2002:01-DII-NS"
      xmlns:ipmpdidl="urn:mpeg:mpeg21:2004:01-IPMPDIDL-NS"
      xmlns:ipmpinfo="urn:mpeg:mpeg21:2004:01-IPMPINFO-NS"
      xmlns:r="urn:mpeg:mpeg21:2003:01-REL-R-NS"
      xmlns:enc="http://www.w3.org/2001/04/xmlenc#"
      xmlns:dsig="http://www.w3.org/2000/09/xmldsig#"
      xmlns:xsi="http://www.w3.org/2001/XMLSchema-instance">
  <Container>
    <Descriptor>
      <Statement mimeType="text/xml">
        <ipmpinfo:IPMPGeneralInfoDescriptor>
          <ipmpinfo:ToolList>
            <ipmpinfo:ToolDescription localID="1">
              <ipmpinfo:IPMPToolID>urn:mpegRA:mpeg21:IPMP:ABC003:77:29</ipmpinfo:IPMPToolID>
              <ipmpinfo:MemberOf>
                <ipmpinfo:AlternateGroup groupID="50"/>
              </ipmpinfo:MemberOf>
              <ipmpinfo:Remote ref="urn:IPMPToolsServer:ToolEnc003-3484"/>
            </ipmpinfo:ToolDescription>
            <ipmpinfo:ToolDescription localID="Tool2">
              <ipmpinfo:IPMPToolID>urn:mpegRA:mpeg21:IPMP:ABC005:77:29</ipmpinfo:IPMPToolID>
              <ipmpinfo:MemberOf>
                <ipmpinfo:AlternateGroup groupID="51"/>
              </ipmpinfo:MemberOf>
              <ipmpinfo:Remote ref="urn:IPMPToolsServer:ToolEnc005-3484"/>
            </ipmpinfo:ToolDescription>
            <ipmpinfo:ToolDescription localID="Tool3">
              <ipmpinfo:IPMPToolID>urn:mpegRA:mpeg21:IPMP:ABC064:55:86</ipmpinfo:IPMPToolID>
              <ipmpinfo:Remote ref="urn:IPMPToolsServer:ToolWat005-6393"/>
            </ipmpinfo:ToolDescription>
          </ipmpinfo:ToolList>
        </ipmpinfo:IPMPGeneralInfoDescriptor>
      </Statement>
    </Descriptor>
    <ipmpdidl:Item>
      <ipmpdidl:Identifier>
        <dii:Identifier>IPMPid0001</dii:Identifier>
      </ipmpdidl:Identifier>
      <ipmpdidl:Info>
        <ipmpinfo:IPMPInfoDescriptor>
          <ipmpinfo:Tool>
            <ipmpinfo:ToolRef localidref="Tool1"/>
          </ipmpinfo:Tool>
          <ipmpinfo:RightsDescriptor>
            <ipmpinfo:License>
```

© ISO/IEC 2006 – All rights reserved

Copyright International Organization for Standardization
Provided by IHS under license with ISO
No reproduction or networking permitted without license from IHS
Not for Resale

```
            <r:license>
              <r:encryptedLicense Type="http://www.w3.org/2001/04/xmlenc#Content">
                <enc:EncryptionMethod Algorithm="http://www.w3.org/2001/04/xmlenc#3des-cbc"/>
                <dsig:KeyInfo>
                  <dsig:KeyName>OS1SymmetricKey</dsig:KeyName>
                </dsig:KeyInfo>
                <enc:CipherData>
                  <enc:CipherValue>0df9j3rgkljsdfgjidjfFjfFgDJiJERW...</enc:CipherValue>
                </enc:CipherData>
              </r:encryptedLicense>
            </r:license>
          </ipmpinfo:License>
        </ipmpinfo:RightsDescriptor>
      </ipmpinfo:IPMPInfoDescriptor>
    </ipmpdidl:Info>
    <ipmpdidl:Contents>3E674F632A56BD56...</ipmpdidl:Contents>
  </ipmpdidl:Item>
  <ipmpdidl:Item>
    <ipmpdidl:Identifier>
      <dii:Identifier>IPMPid0002</dii:Identifier>
    </ipmpdidl:Identifier>
    <ipmpdidl:Info>
      <ipmpinfo:IPMPInfoDescriptor>
        <ipmpinfo:Tool>
          <ipmpinfo:ToolRef localidref="Tool1"/>
        </ipmpinfo:Tool>
        <ipmpinfo:Tool>
          <ipmpinfo:ToolRef localidref="Tool3"/>
        </ipmpinfo:Tool>
        <ipmpinfo:RightsDescriptor>
          <ipmpinfo:License>
            <r:license>
              <r:encryptedLicense Type="http://www.w3.org/2001/04/xmlenc#Content">
                <enc:EncryptionMethod Algorithm="http://www.w3.org/2001/04/xmlenc#3des-cbc"/>
                <dsig:KeyInfo>
                  <dsig:KeyName>OS2SymmetricKey</dsig:KeyName>
                </dsig:KeyInfo>
                <enc:CipherData>
                  <enc:CipherValue>SDfkDWEje90whg...</enc:CipherValue>
                </enc:CipherData>
              </r:encryptedLicense>
            </r:license>
          </ipmpinfo:License>
        </ipmpinfo:RightsDescriptor>
      </ipmpinfo:IPMPInfoDescriptor>
    </ipmpdidl:Info>
    <ipmpdidl:Contents>A56BD5A63E6654F632...</ipmpdidl:Contents>
  </ipmpdidl:Item>
 </Container>
</DIDL>
```


© ISO/IEC 2006 – All rights reserved
Copyright International Organization for Standardization
Provided by IHS under license with ISO
No reproduction or networking permitted without license from IHS
Not for Resale

Annex F
(normative)

List of Registration Authorities

F.1 Registered Data

This specification requires registration authorities for the following:

1. The IPMP_ToolID for a specific implementation of an IPMP Tool.

NOTE The list of registration authorities is common for MPEG-21 IPMP as well MPEG-2 IPMP specified in ISO/IEC 13818-11 and MPEG-4 IPMP Extension specified in ISO/IEC 14496-13.

F.2 Procedure for the request of Registered Data

Requesters of Registered data shall apply to the Registration Authority. Registration forms shall be available from the Registration Authority. The requester shall provide the information specified in F.3. Companies and organizations are eligible to apply.

F.3 Responsibilities of the Registration Authority

The primary responsibilities of the Registration Authority administrating the registration are outlined in this annex; certain other responsibilities may be found in the JTC 1 Directives. The Registration Authority shall:

a) implement a registration procedure for application for a unique IPMP_ToolID in accordance with the JTC 1 Directives;

b) (a) above is expected to be either jointly registered or individually registered.

c) (a) must be unique amongst each registration request.

d) receive and process the applications for allocation of identifiers from application providers;

e) ascertain which applications received are in accordance with this registration procedure, and to inform the requester within 30 days of receipt of the application of their assigned RID;

f) inform application providers whose request is denied in writing within 30 days of receipt of the application, and to consider resubmissions of the application in a timely manner;

g) maintain an accurate register of the allocated identifiers. Revisions to format specifications shall be accepted and maintained by the Registration Authority;

h) make the contents of this register available upon request to National Bodies of JTC 1 that are members of ISO or IEC, to liaison organizations of ISO or IEC and to any interested party;

i) maintain a data base of Registered Data request forms, granted and denied. Parties seeking technical information on the format of private data which has been registered shall have access to such information which is part of the data base maintained by the Registration Authority;

j) report its activities annually to JTC 1, the ITTF, and the SC 29 Secretariat, or their respective designees;

--`,,```,,,,````-`-`,,`,,`,`,,`---

© ISO/IEC 2006 – All rights reserved

Copyright International Organization for Standardization
Provided by IHS under license with ISO
No reproduction or networking permitted without license from IHS
Not for Resale

F.4 Contact information for the Registration Authority

To Be Determined

F.5 Responsibilities of Parties Requesting Registered Data

The party requesting the registration of data shall:

a) apply using the Form and procedures supplied by the Registration Authority;

b) include a description of the purpose of the registered data, and the required technical details as specified in the application form;

c) provide contact information describing how a complete description can be obtained on a non-discriminatory basis;

d) agree to institute the intended use of the granted registered data within a reasonable time frame; and

e) to maintain a permanent record of the application form and the notification received from the Registration Authority of registered data.

F.6 Appeal Procedure for Denied Applications

The Registration Management Group is formed to have jurisdiction over appeals to denied request for registered data. The RMG shall have a membership who is nominated by P- and L-members of the ISO technical committee responsible for ISO/IEC 21000. It shall have a convenor and secretariat nominated from its members. The Registration Authority is entitled to nominate one non-voting observing member.

The responsibilities of the RMG shall be:

a) to review and act on all appeals within a reasonable time frame;

b) to inform, in writing, organizations which make an appeal for reconsideration of its petition of the RMGs disposition of the matter;

c) to review the annual report of the Registration Authorities summary of activities; and

d) to supply Member Bodies of ISO and National Committees of IEC with information concerning the scope of operation of the Registration Authority.

F.7 Registration Application Form

F.7.1 Contact Information of organization requesting a RID

Organization Name:

Address:

Telephone:

© ISO/IEC 2006 – All rights reserved
Copyright International Organization for Standardization
Provided by IHS under license with ISO
No reproduction or networking permitted without license from IHS
Not for Resale

Fax:

E-mail:

Telex:

F.7.2 Request for specific registered data

NOTE — If the system has already been implemented and is in use, fill in this item and item F.7.3 and skip to F.7.5, otherwise leave this space blank and skip to F.7.3.

F.7.3 Short description of the Registered Data that is in use and date system was implemented

F.7.4 Statement of an intention to apply the assigned Registered Data

F.7.5 Date of intended implementation of the Registered Data

F.7.6 Authorized representative

Name:

Title:

Address:

Email:

Signature _____

© ISO/IEC 2006 – All rights reserved

Copyright International Organization for Standardization
Provided by IHS under license with ISO
No reproduction or networking permitted without license from IHS
Not for Resale

F.7.7 For official use of the Registration Authority

Registration Rejected _____

Reason for rejection of the application:

Registration Granted _____ Registration Value _____

Attachment 1 — Attachment of technical details of the registered data format.

Attachment 2 — Attachment of notification of appeal procedure for rejected applications.

--`,,```,,,,````-`-`,,`,,`,`,,`---

© ISO/IEC 2006 – All rights reserved
Copyright International Organization for Standardization
Provided by IHS under license with ISO
No reproduction or networking permitted without license from IHS
Not for Resale

Annex G
(informative)

Example for protect resource fragment

The text and example below shows the mechanism how IPMP Info be used to protect a resource flexibly, especially when it is used together with IPMP DIDL.

```
<DIDL>
    <Item>
        <Descriptor>
            <Statement mimeType="plainText">
                This is the resource that is protected wholly
            </Statement>
        </Descriptor>
        <Component>
            <ipmpdidl:Resource>
                <ipmpdidl:Info>
                    <ipmpinfo:IPMPInfoDescriptor>
                        <ipmpinfo:Tool>
                            <!--Put the tool here-->
                        </ipmpinfo:Tool>
                    </ipmpinfo:IPMPInfoDescriptor>
                </ipmpdidl:Info>
                <ipmpdidl:Contents>
                    <!-- the resource in base64-->
                </ipmpdidl:Contents>
            </ipmpdidl:Resource>
        </Component>
    </Item>
</DIDL>
```

The example in the table above shows the mechanism to protect a resource wholly. The Resource that is placed within the ipmpdidl:Contents element is protected by the associated ipmpinfo:IPMPInfoDescriptor that is placed within the ipmpdidl:Info element.

The example in the table below shows the mechanism to protect a resource partially. The resource is protected at two different fragment locations: fragment 1 starts at byte 0 with length 3000000 bytes; fragment 2 starts at byte 6000000 with length 1000000.

```
<DIDL>
    <Item>
        <Descriptor>
            <Statement mimeType="plainText">
                This is the resource that is protected partially
            </Statement>
        </Descriptor>
        <Component>
            <Resource><!-- the resource in base64--></Resource>
            <Anchor precedence="200">
                <ipmpdidl:Fragment fragmentId="#offset(0, 3000000)">
                    <ipmpdidl:Info>
                        <ipmpinfo:IPMPInfoDescriptor>
```

--`,,```,,,,````-`-`,,`,,`,`,,`---

© ISO/IEC 2006 – All rights reserved
Copyright International Organization for Standardization
Provided by IHS under license with ISO
No reproduction or networking permitted without license from IHS
Not for Resale

```
                            <ipmpinfo:Tool>
                                <!--Put the tool here-->
                            </ipmpinfo:Tool>
                        </ipmpinfo:IPMPInfoDescriptor>
                    </ipmpdidl:Info>
                </ipmpdidl:Fragment>
            </Anchor>
            <Anchor precedence="200">
                <ipmpdidl:Fragment fragmentId="#offset(6000000, 1000000)">
                    <ipmpdidl:Info>
                        <ipmpinfo:IPMPInfoDescriptor>
                            <ipmpinfo:Tool>
                                <!--Put the tool here-->
                            </ipmpinfo:Tool>
                        </ipmpinfo:IPMPInfoDescriptor>
                    </ipmpdidl:Info>
                </ipmpdidl:Fragment>
            </Anchor>
        </Component>
    </Item>
</DIDL>
```

--`,,```,,,,````-`-`,,`,,`,`,,`---

© ISO/IEC 2006 – All rights reserved
Copyright International Organization for Standardization
Provided by IHS under license with ISO
No reproduction or networking permitted without license from IHS
Not for Resale

Annex H
(informative)

IPMP Tool Updating Mechanism

The text and diagram below show the mechanism of how the IPMP tool is updated in a Peer.

The following is a sequence of the processing that the Peer should perform to initiate the IPMP tool update.

a) Parse IPMP DIDL elements.

b) Parse the Tool information element and the ConfigurationSettings element of the IPMP tool.

c) If the ConfigurationSettings element has the Update element, parse the Update element and register its Location element as a reference to a remote tool server for IPMP tool update.

d) If the ScheduledUpdateTime element is in the Update element, parse the ScheduledUpdateTime element and set the update time (scheduled) condition in the Peer.

e) Check the current time compared with the update time condition setting. If it is required, the Peer initiates the IPMP tool updating.

f) If the SupportedPlatform element is in the Update element, parse the SupportedPlatform element. If the Peer does match the required condition (platform properties and capabilities) that supports the tool properly, the IPMP tool updating is initiated.

Then, the Peer completes the IPMP tool update process by requesting and downloading the tool from the remote tool server as followings:

a) Request the remote tool server to update the IPMP tool in the Peer.

b) Download the requested tool and its associated tool information from the remote tool server.

c) Check the validity of the downloaded tool and tool information.

d) Register the new tool in the Peer

e) Update the tool information of the tool that is newly registered to the Peer

Figure H.1 and Figure H.2 show the mechanism of how the IPMP tool is updated in a Peer. For acquisition of the required tool, the Peer requests the remote tool server a new IPMP tool. Then, the tool server sends the required tool with associated tool information (e.g., tool ID, information of initialization settings and configuration settings etc.) to the Peer.

To complete the IPMP tool update procedure, the Peer parses the new tool information and then compares with the previous tool information. If the downloaded tool is determined as a new one, the new tool and the associated tool information should be registered (updating completed) in the Peer.

--`,,```,,,,````-`-`,,`,,`,`,,`---
© ISO/IEC 2006 – All rights reserved
Copyright International Organization for Standardization
Provided by IHS under license with ISO
No reproduction or networking permitted without license from IHS
Not for Resale

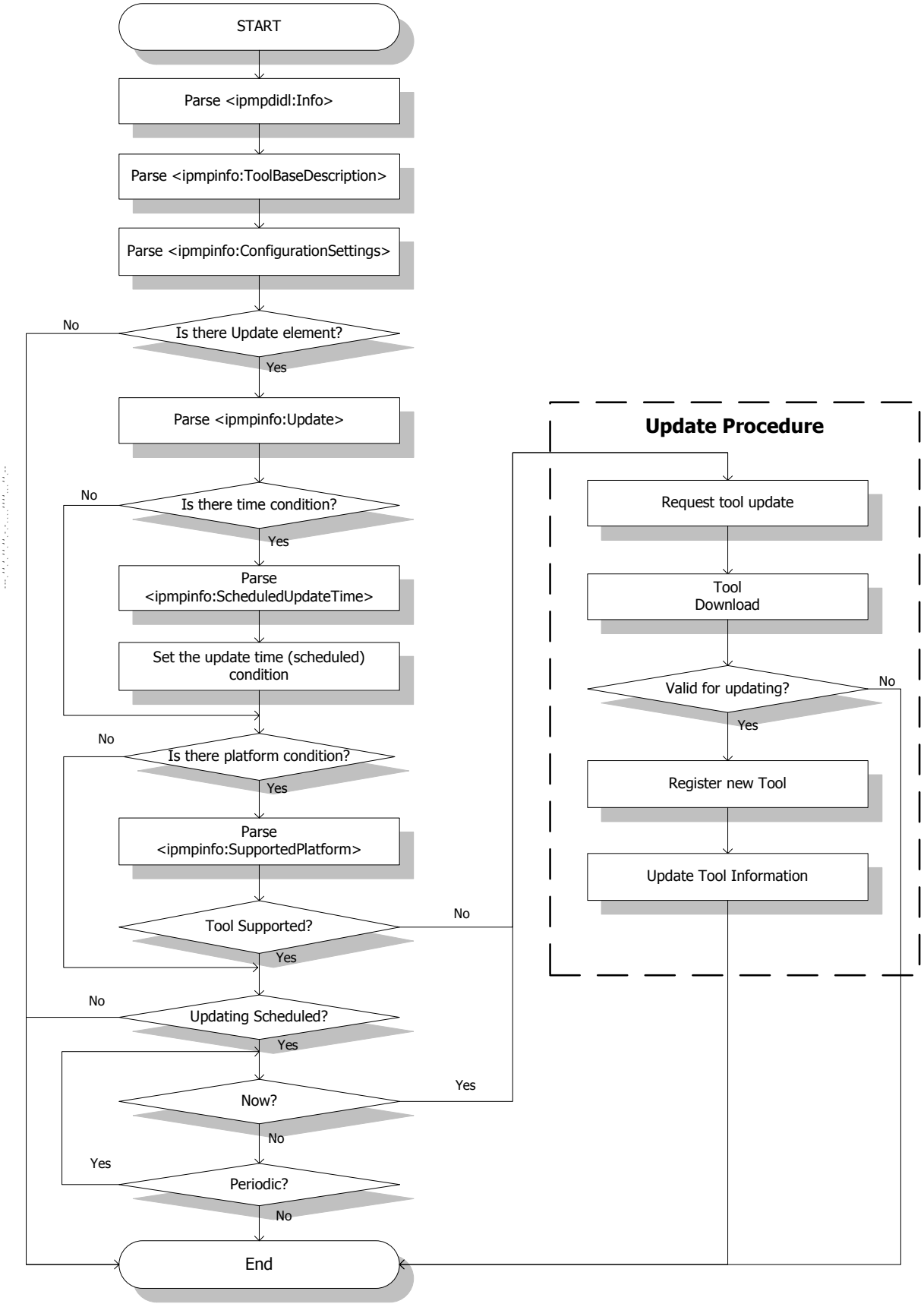

Figure H.1 — The operation sequence of the IPMP tool updating mechanism

© ISO/IEC 2006 – All rights reserved
Copyright International Organization for Standardization
Provided by IHS under license with ISO
No reproduction or networking permitted without license from IHS
Not for Resale

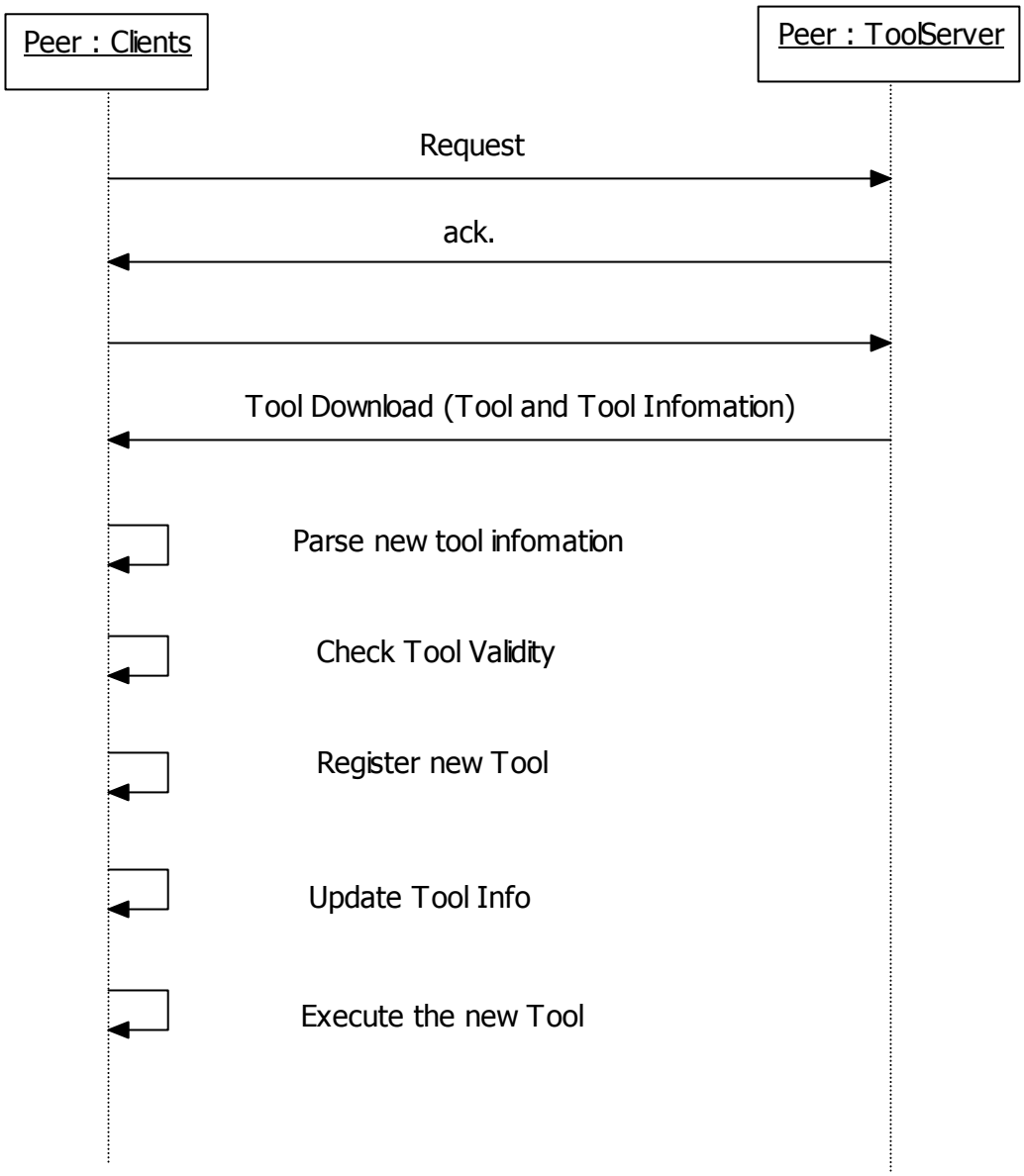

Figure H.2 — Sequence diagram for IPMP tool updating

© ISO/IEC 2006 – All rights reserved
Copyright International Organization for Standardization
Provided by IHS under license with ISO
No reproduction or networking permitted without license from IHS
Not for Resale

Bibliography

[1] ISO/IEC 15444-1, *Information technology — JPEG 2000 image coding system: Core coding system*

[2] *XSL Transformations (XSLT), Version 1.0* W3C Recommendation, November 16th, 1999. Available on W3C site at http://www.w3.org/TR/xslt

[3] *Comparative Analysis of Six XML Schema Languages*, D. LEE, W.W. CHU, ACM SIGMOD Record, Vol. 29, No. 3, September 2000

[4] XML-Schema Part 0: Primer W3C Recommendation, May 2, 2001, Available at http://www.w3.org/TR/xmlschema-0/

[5] XML-Schema Part 1: Structures W3C Recommendation, May 2, 2001, Available at http://www.w3.org/TR/xmlschema-1/

[6] XML-Schema Part 2: Datatypes W3C Recommendation, May 2, 2001, Available at http://www.w3.org/TR/xmlschema-2/

[7] IEEE 754-1985, IEEE Standard for Binary Floating-Point Arithmetic

[8] XML Information Set, W3C Recommendation 24 October 2001 Available at http://www.w3.org/TR/xml-infoset/

[9] XML Base, W3C Recommendation 27 June 2001, Available at http://www.w3.org/TR/xmlbase/

[10] XML Path Language (XPath), Version 1.0 W3C Recommendation 16 November 1999,Available at http://www.w3.org/TR/xpath

[11] Namespaces in XML, W3C Recommendation 14 January 1999, Available at http://www.w3.org/TR/REC-xml-names/

[12] ISO/IEC 14496-13, *Information technology — Coding of audio-visual objects — Part 13: Intellectual Property Management and Protection (IPMP) extensions*

[13] ISO/IEC 13818-11, *Information technology — Generic coding of moving pictures and associated audio information — Part 11: IPMP on MPEG-2 systems*

© ISO/IEC 2006 – All rights reserved
Copyright International Organization for Standardization
Provided by IHS under license with ISO
No reproduction or networking permitted without license from IHS
Not for Resale

Copyright International Organization for Standardization
Provided by IHS under license with ISO
No reproduction or networking permitted without license from IHS
Not for Resale

ICS 35.040

Price based on 70 pages

© ISO/IEC 2006 – All rights reserved
Copyright International Organization for Standardization
Provided by IHS under license with ISO
No reproduction or networking permitted without license from IHS
Not for Resale