INTERNATIONAL STANDARD

ISO/IEC 20115

First edition
2004-05-15

Information technology — Telecommunications and information exchange between systems — Private Integrated Services Network — Use of QSIG for Message Centre Access (MCA) profile standard

Technologies de l'information — Télécommunications et échange d'information entre systèmes — Réseau privé à intégration de services — Emploi de QSIG pour une norme de profil pour accès au centre du message (MCA)

Reference number
ISO/IEC 20115:2004(E)



© ISO/IEC 2004

Copyright International Organization for Standardization
Reproduced by IHS under license with ISO
No reproduction or networking permitted without license from IHS

Not for Resale

PDF disclaimer

This PDF file may contain embedded typefaces. In accordance with Adobe's licensing policy, this file may be printed or viewed but shall not be edited unless the typefaces which are embedded are licensed to and installed on the computer performing the editing. In downloading this file, parties accept therein the responsibility of not infringing Adobe's licensing policy. The ISO Central Secretariat accepts no liability in this area.

Adobe is a trademark of Adobe Systems Incorporated.

Details of the software products used to create this PDF file can be found in the General Info relative to the file; the PDF-creation parameters were optimized for printing. Every care has been taken to ensure that the file is suitable for use by ISO member bodies. In the unlikely event that a problem relating to it is found, please inform the Central Secretariat at the address given below.

© ISO/IEC 2004

All rights reserved. Unless otherwise specified, no part of this publication may be reproduced or utilized in any form or by any means, electronic or mechanical, including photocopying and microfilm, without permission in writing from either ISO at the address below or ISO's member body in the country of the requester.

ISO copyright office
Case postale 56 • CH-1211 Geneva 20
Tel. + 41 22 749 01 11
Fax + 41 22 749 09 47
E-mail copyright@iso.org
Web www.iso.org

Published in Switzerland

Copyright International Organization for Standardization
Reproduced by IHS under license with ISO
No reproduction or networking permitted without license from IHS

© ISO/IEC 2004 – All rights reserved

Not for Resale

Contents

Page

Foreword iv

Introduction v

1 Scope 1

2 Conformance 1

3 Normative references 1

4 Terms and definitions 3
4.1 External definitions 3

5 Acronyms 6

6 Specification framework 7
6.1 General Description 7
6.2 Scenarios 8

7 Profiles 9
7.1 MCA-Profile-1 9
7.2 MCA-Profile-2 11
7.3 MCA-Profile-3 12
7.4 MCA-Profile-4 14

Annex A (normative) **Requirements List (RL)** 16
A.1 General 16
A.2 Relationship between RL and corresponding PICS proformas 16
A.3 Requirement List 17

Annex B (normative) **Profile specific ICS proforma** 40
B.1 General 40
B.2 Instruction for completing the ICS proforma 40
B.3 ICS proforma for Profile 1 42
B.4 ICS proforma for Profile 2 44
B.5 ICS proforma for Profile 3 46
B.6 ICS proforma for Profile 4 49

Annex C (informative) **Example Message Flows** 52
C.1 Example Message Flows for Profile 1 52
C.2 Example Message Flows for Profile 2 55
C.3 Example Message Flows for Profile 3 57
C.4 Example Message Flows for Profile 4 60

© ISO/IEC 2004 All rights reserved

Copyright International Organization for Standardization
Reproduced by IHS under license with ISO
No reproduction or networking permitted without license from IHS
Not for Resale

Foreword

ISO (the International Organization for Standardization) and IEC (the International Electrotechnical Commission) form the specialized system for worldwide standardization. National bodies that are members of ISO or IEC participate in the development of International Standards through technical committees established by the respective organization to deal with particular fields of technical activity. ISO and IEC technical committees collaborate in fields of mutual interest. Other international organizations, governmental and non-governmental, in liaison with ISO and IEC, also take part in the work. In the field of information technology, ISO and IEC have established a joint technical committee, ISO/IEC JTC 1.

International Standards are drafted in accordance with the rules given in the ISO/IEC Directives, Part 2.

The main task of the joint technical committee is to prepare International Standards. Draft International Standards adopted by the joint technical committee are circulated to national bodies for voting. Publication as an International Standard requires approval by at least 75 % of the national bodies casting a vote.

Attention is drawn to the possibility that some of the elements of this document may be the subject of patent rights. ISO and IEC shall not be held responsible for identifying any or all such patent rights.

ISO/IEC 20115 was prepared by ECMA (as ECMA-345) and was adopted, under a special “fast-track procedure”, by Joint Technical Committee ISO/IEC JTC 1, *Information technology*, in parallel with its approval by national bodies of ISO and IEC.

--`,,`,,-`-`,,`,,`,`,,`---

© ISO/IEC 2004 – All rights reserved
Copyright International Organization for Standardization
Reproduced by IHS under license with ISO
No reproduction or networking permitted without license from IHS
Not for Resale

Introduction

This International Standard is one of a series defining services and signalling protocols applicable to Private Integrated Services Networks (PISNs). The series uses ISDN concepts as developed by ITU-T and conforms to the framework of International Standards for Open Systems Interconnection as defined by ISO/IEC.

This International Standard is based upon the practical experience of ECMA member companies and the results of their active and continuous participation in the work of ISO/IEC JTC1, ITU-T, ETSI and other international and regional standardization bodies. It represents a pragmatic and widely based consensus.

© ISO/IEC 2004 All rights reserved

Copyright International Organization for Standardization
Reproduced by IHS under license with ISO
No reproduction or networking permitted without license from IHS
Not for Resale

Copyright International Organization for Standardization
Reproduced by IHS under license with ISO
No reproduction or networking permitted without license from IHS
Not for Resale

Information technology — Telecommunications and information exchange between systems — Private Integrated Services Network — Use of QSIG for Message Centre Access (MCA) profile standard

1 Scope

This Profile Standard specifies the combination of base standards, together with the selection of appropriate options and parameter values, necessary to specify how QSIG/PSS1 can be used for Message Centre Access (MCA) procedures.

This International Standard identifies the necessary or optional employment of particular functions, procedures and services for a

- Calling User to deposit messages for a Served User at a Message Centre,
- Served User to monitor the Served User's Mailbox for new messages,
- Served User to browse through the messages saved in the Served User's Mailbox,
- Served User to retrieve the messages saved in the Served User's Mailbox, and
- Served User to get connected to the Originator of a message or any other destination.

2 Conformance

A system conforms to this International Standard if it correctly performs all the mandatory capabilities defined in one or more of the requirement list (RL) (Annex A) and one or more of the profile specific ICS (Annex B).

NOTE For the purpose of this International Standard capabilities marked as optional in the base standards may be mandatory or excluded.

3 Normative references

The following referenced documents are indispensable for the application of this document. For dated references, only the edition cited applies. For undated references, the latest edition of the referenced document (including any amendments) applies.

ISO/IEC 9646-7:1994, *Information technology — Open Systems Interconnection — Conformance testing methodology and framework — Part 7: Implementation Conformance Statements*

ISO/IEC 11571:1998, *Information technology — Telecommunications and information exchange between systems — Private Integrated Services Networks — Addressing*

ISO/IEC 11572:2000, *Information technology — Telecommunications and information exchange between systems — Private Integrated Services Network — Circuit mode bearer services — Inter-exchange signalling procedures and protocol*

© ISO/IEC 2004 All rights reserved

Copyright International Organization for Standardization
Reproduced by IHS under license with ISO
No reproduction or networking permitted without license from IHS
Not for Resale

ISO/IEC 11574:2000, *Information technology — Telecommunications and information exchange between systems — Private Integrated Services Network — Circuit-mode 64 kbit/s bearer services — Service description, functional capabilities and information flows*

ISO/IEC 11579-1:1994, *Information technology — Telecommunications and information exchange between systems — Private integrated services network — Part 1: Reference configuration for PISN Exchanges (PINX)*

ISO/IEC 11582:2002, *Information technology — Telecommunications and information exchange between systems — Private Integrated Services Network — Generic functional protocol for the support of supplementary services — Inter-exchange signalling procedures and protocol*

ISO/IEC 13865:2003, *Information technology — Telecommunications and information exchange between systems — Private Integrated Services Network — Specification, functional model and information flows — Call Transfer supplementary service*

ISO/IEC 13869:2003, *Information technology — Telecommunications and information exchange between systems — Private Integrated Services Network — Inter-exchange signalling protocol — Call Transfer supplementary service*

ISO/IEC 13872:2003, *Information technology — Telecommunications and information exchange between systems — Private Integrated Services Network — Specification, functional model and information flows — Call Diversion supplementary services*

ISO/IEC 13873:2003, *Information technology — Telecommunications and information exchange between systems — Private Integrated Services Network — Inter-exchange signalling protocol — Call Diversion supplementary services*

ISO/IEC 15505:2003, *Information technology — Telecommunications and information exchange between systems — Private Integrated Services Network — Specification, functional model and information flows — Message Waiting Indication supplementary service*

ISO/IEC 15506:2003, *Information technology — Telecommunications and information exchange between systems — Private Integrated Services Network — Inter-exchange signalling protocol — Message Waiting Indication supplementary service*

ISO/IEC 19459:2001, *Information technology — Telecommunications and information exchange between systems — Private Integrated Services Network — Specification, functional model and information flows — Single Step Call Transfer Supplementary Service*

ISO/IEC 19460:2003, *Information technology — Telecommunications and information exchange between systems — Private Integrated Services Network — Inter-exchange signalling protocol — Single Step Call Transfer supplementary service*

ISO/IEC 20113:2004, *Information technology — Telecommunications and information exchange between systems — Private Integrated Services Network — Specification, functional model and information flows — Make call request supplementary service*

ISO/IEC 20114:2004, *Information technology — Telecommunications and information exchange between systems — Private Integrated Services Network — Inter-exchange signalling protocol — Make call request supplementary service*

ISO/IEC 20116:2004, *Information technology — Telecommunications and information exchange between systems — Private Integrated Services Network — Specification, functional model and information flows — Message centre monitoring and mailbox identification supplementary services*

ISO/IEC 20117:2004, *Information technology — Telecommunications and information exchange between systems — Private Integrated Services Network — Inter-exchange signalling protocol — Message centre monitoring and mailbox identification supplementary services*

© ISO/IEC 2004 – All rights reserved
Copyright International Organization for Standardization
Reproduced by IHS under license with ISO
No reproduction or networking permitted without license from IHS
Not for Resale

ISO/IEC 21407:2001, *Information technology — Telecommunications and information exchange between systems — Private Integrated Services Network — Specification, functional model and information flows — Simple dialog supplementary service*

ISO/IEC 21408:2003, *Information technology — Telecommunications and information exchange between systems — Private Integrated Services Network — Inter-exchange signalling protocol — Simple dialog supplementary service*

4 Terms and definitions

For the purposes of this document, the following terms and definitions apply.

4.1 External definitions

This International Standard uses the following terms defined in other documents:

— Basic Call (ISO/IEC 11582)

— Call (ISO/IEC 11582)

— Call Independent Signalling Connection (ISO/IEC 11582)

— Call Related (ISO/IEC 11582)

— Complete Number (ISO/IEC 11571)

— Compressed Information (ISO/IEC 20116)

— Display information (ISO/IEC 21407)

— Diverted-to PINX (ISO/IEC 13873)

— Keypad information (ISO/IEC 21407)

— Mailbox (ISO/IEC 20116)

— Mailbox Identification (ISO/IEC 20116)

— Make Call Request (ISO/IEC 20113)

— Message Centre (ISO/IEC 20116)

— Message Centre PINX (ISO/IEC 20117)

— Message Type (ISO/IEC 20116)

— Message Status (ISO/IEC 20116)

— MCR Co-operating PINX (ISO/IEC 20114)

— MCR Co-operating User (ISO/IEC 20113)

— MCR Destination PINX (ISO/IEC 20114)

— MCR Destination User (ISO/IEC 20113)

© ISO/IEC 2004 All rights reserved

Copyright International Organization for Standardization
Reproduced by IHS under license with ISO
No reproduction or networking permitted without license from IHS
Not for Resale

- MCR Requesting PINX (ISO/IEC 20114)
- MCR Requesting User (ISO/IEC 20113)
- New Message (ISO/IEC 20116)
- Original Call (ISO/IEC 20113)
- Originator (ISO/IEC 20116)
- Private Integrated Services Network (PISN) (ISO/IEC 11579-1)
- Private Integrated services Network eXchange (PINX) (ISO/IEC 11579-1)
- Requested Call (ISO/IEC 20113)
- Rerouting PINX (ISO/IEC 13873)
- Retrieved Message (ISO/IEC 20116)
- Secondary Call (ISO/IEC 13869)
- Served User (ISO/IEC 13872, ISO/IEC 20116)
- Server User (ISO/IEC 21407)
- Served User PINX (ISO/IEC 13873, ISO/IEC 20117)
- Server User PINX (ISO/IEC 21408)
- Transferred User (ISO/IEC 19459)
- Transferring User (ISO/IEC 13869)
- Telecommunication Service (ISO/IEC 11574)
- User (ISO/IEC 11574)
- User B (ISO/IEC 13865)
- Q reference point (ISO/IEC 11579-1)

4.2
Served User
The Served User as defined in Message Centre Monitoring (ISO/IEC 20116). For MCA, the Served User may also act as Served User in Call Diversion (as defined in ISO/IEC 13872), as a User B in Call Transfer (as defined in ISO/IEC 13865), as a Client User in Simple Dialog (as defined in ISO/IEC 21407), as a Transferred User in Single Step Call Transfer (as defined in ISO/IEC 19459) and as a Co-operating User in Make Call Request (as defined in ISO/IEC 20113).

4.3
Served User PINX
The Served User PINX as defined in ISO/IEC 20117. For MCA, the Served User PINX may also act as Served User PINX or Rerouting PINX for Call Diversion (as defined in ISO/IEC 13872), as a Primary PINX for Call Transfer (as defined in ISO/IEC 13865), as a Client User PINX for Simple Dialog (as defined in ISO/IEC 21408), as a Transferred PINX for Single Step Call Transfer (as defined in ISO/IEC 19460) and as a Co-operating PINX for Make Call Request (as defined in ISO/IEC 20114).

© ISO/IEC 2004 – All rights reserved
Copyright International Organization for Standardization
Reproduced by IHS under license with ISO
No reproduction or networking permitted without license from IHS
Not for Resale

4.4
Message Centre
Depending on the MCA-Profile, either the MCM or the MWI Message Centre.

4.4.1
MCM Message Centre
The Message Centre as defined in ISO/IEC 20116. This definition is used in MCA-Profile-3 and MCA-Profile-4. For MCA, the MCM Message Centre may also act as Diverted-to PINX for Call Diversion (as defined in ISO/IEC 13873), as a Server User PINX for Simple Dialog (as defined in ISO/IEC 21408), a Transferring PINX for Call Transfer (as defined in ISO/IEC 13869), a Transferring PINX for Single Step Call Transfer (as defined in ISO/IEC 19460) and a Requesting PINX for Make Call Request (as defined in ISO/IEC 20114).

4.4.2
MWI Message Centre
The Message Centre as defined in ISO/IEC 15505. This definition is used in MCA-Profile-1 and MCA-Profile-2. For MCA, the MWI Message Centre may also act as Diverted-to PINX for Call Diversion (as defined in ISO/IEC 13873), as a Server User PINX for Simple Dialog (as defined in ISO/IEC 21408), as a Transferring PINX for Call Transfer (as defined in ISO/IEC 13869) and as a Transferring PINX for Single Step Call Transfer (as defined in ISO/IEC 19460).

4.5
MCA-Profile-1
MCA-Profile-1 is a profile, which describes the interoperation of supplementary services for Message Centre Access purposes. Supplementary services involved in MCA-Profile-1 are Call Diversion, Message Waiting Indication and Call Transfer.

4.6
MCA-Profile-2
MCA-Profile-2 is a profile, which describes the interoperation of supplementary services for Message Centre Access purposes. Supplementary services involved in MCA-Profile-2 are Call Diversion, Message Waiting Indication, Call Transfer, Single Step Call Transfer and Simple Dialog.

4.7
MCA-Profile-3
MCA-Profile-3 is a profile, which describes the interoperation of supplementary services for Message Centre Access purposes. Supplementary services involved in MCA-Profile-3 are Call Diversion, Call Transfer, Single Step Call Transfer, Simple Dialog, Message Centre Monitoring and Mailbox Identification.

4.8
MCA-Profile-4
MCA-Profile-4 is a profile, which describes the interoperation of supplementary services for Message Centre Access purposes. Supplementary services involved in MCA-Profile-4 are Call Diversion, Call Transfer, Single Step Call Transfer, Simple Dialog, Message Centre Monitoring, Mailbox Identification and Make Call Request.

4.9
Message Deposit
The part of MCA describing how an Originator can deposit a Message in a Served User's Mailbox at a Message Centre.

4.9.1
Direct Message Deposit
The part of MCA describing how an Originator can deposit a Message in a Served User's Mailbox by directly calling the Message Centre, i.e. without a prior call to the Served User.

4.9.2
Message Deposit after Diversion
The part of MCA describing how an Originator can deposit a Message in a Served User's Mailbox if the Originator gets diverted to the Served User's Mailbox.

--`,,-`-`,,`,,`,`,,`---
© ISO/IEC 2004 All rights reserved
Copyright International Organization for Standardization
Reproduced by IHS under license with ISO
No reproduction or networking permitted without license from IHS
Not for Resale

4.9.3
Message Deposit after Transfer
The part of MCA describing how an Originator can deposit a Message in a Served User's Mailbox if the Originator gets transferred to the Served User's Mailbox.

4.10
Message Centre Monitoring
The part of MCA describing how a Message Centre informs a Served User about the status and status changes of Messages in the Served User's Mailbox.

4.11
Message Browsing
The part of MCA describing how a Served User can contact a Message Centre to get access to the Served User's Mailbox, for example; configuration update, message browsing or message deletion purposes.

4.12
Message Retrieval
The part of MCA describing how a Served User can retrieve Messages from the Served User's Mailbox.

4.13
Message Centre Transfer
The part of MCA describing how a Served User can request the Message Centre to get connected (e.g. transferred) to the Originator of a specific Message or any other destination.

5 Acronyms

APDU	Application Protocol Data Unit
ASN.1	Abstract Syntax Notation One
BC	Basic Call
CF	Supplementary Service Call Diversion
CISC	Call Independent Signalling Connection
CN	Corporate telecommunication Network
CT	Supplementary Service Call Transfer
DTMF	Dual Tone Multiple Frequency
GF	Generic Functional protocol (for the support of supplementary services)
MCA	Message Centre Access
MCM	Supplementary Service Message Centre Monitoring
MCR	Supplementary Service Make Call Request
MID	Supplementary Service Mailbox Identification
MWI	Supplementary Service Message Waiting Indication
NFE	Network Facility Extension
PINX	Private Integrated services Network eXchange

--`,,`,,-`-`,,`,,`,`,,`---

© ISO/IEC 2004 – All rights reserved
Copyright International Organization for Standardization
Reproduced by IHS under license with ISO
No reproduction or networking permitted without license from IHS
Not for Resale

PISN	Private Integrated Services Network
PNP	Private Numbering Plan
QSIG	Q reference point SIGnalling system
RL	Requirements List
SD	Supplementary Service Simple Dialog
SS	Supplementary Service
SSCT	Supplementary Service Single Step Call Transfer

6 Specification framework

6.1 General Description

This International Standard describes the usage and interoperability of basic and supplementary services within a PISN for the purpose of Message Centre Access (MCA).

MCA incorporates functionality for the use of accessing a Message Centre due to the following reasons:

- an Originator deposits a Message in the Mailbox of a Served User (Message Deposit);
- a Message Centre informs a Served User about Messages in the Served User's Mailbox (Message Centre Monitoring);
- a Served User contacts the Message Centre to, for example, update configuration and browse or delete messages (Message Browsing);
- a Served User contacts the Message Centre in order to retrieve messages stored in the Served User's Mailbox (Message Retrieval);
- a Served User contacts the Message Centre to request connection to the Originator of a Message or any other destination (Message Centre Transfer).

To obtain the functionality needed for these procedures, different Supplementary Services were standardised in the past. Some of these Supplementary Services have similar functionality (e.g. Message Waiting Indication and Message Centre Monitoring or Call Transfer and Single Step Call Transfer) that leads to a variety of different combinations of these services. To restrict the variety for interworking purposes and to allow a smooth migration from older services to newer ones, four different profiles were defined for MCA:

- MCA-Profile-1 which makes use of Message Waiting Indication, Call Diversion and Call Transfer;
- MCA-Profile-2 which makes use of Message Waiting Indication, Call Diversion, Simple Dialog, Call Transfer and Single Step Call Transfer;
- MCA-Profile-3 which makes use of Message Centre Monitoring, Mailbox Identification, Call Diversion, Simple Dialog, Call Transfer and Single Step Call Transfer;
- MCA-Profile-4 which makes use of Message Centre Monitoring, Mailbox Identification, Call Diversion, Simple Dialog, Make Call Request, Call Transfer, Single Step Call Transfer.

© ISO/IEC 2004 All rights reserved

Copyright International Organization for Standardization
Reproduced by IHS under license with ISO
No reproduction or networking permitted without license from IHS
Not for Resale

6.2 Scenarios

6.2.1 Message Deposit

6.2.1.1 Direct Message Deposit

An Originating User may directly call a specific Message Centre to deposit a Message of a telecommunication service Message Type within the Mailbox of a specific Served User. Due to information received during call establishment, the Message Centre will connect the Originator to the indicated Mailbox, which then will provide further information either by means of B-Channel announcements or display information.

NOTE The signalling information provided during call establishment may not be sufficient to identify the required Mailbox. In such cases the Message Centre will require more information from the Originator, e.g. the party number of the Served User for whom a Message is to be deposited, in order to identify the mailbox.

After the Originator has deposited the Message, the Message Centre may either offer further services to the Originator or release the connection.

Clearing of the connection is the responsibility of the Originator.

6.2.1.2 Message Deposit after Diversion

The call from an Originator to a Served User may be diverted to the Served User's Mailbox, to allow the Originator to deposit a Message for the Served User.

After the Originator has deposited the Message, the Message Centre may either offer further services to the Originator or release the connection.

Clearing of the connection is the responsibility of the Originator.

6.2.1.3 Message Deposit after Transfer

The call from an Originator may be transferred, e.g. by an attendant using Call Transfer or Single Step Call Transfer, to the Served User's Mailbox to allow the Originator to deposit a Message for the Served User.

After the Originator has deposited the Message, the Message Centre may either offer further services to the Originator or release the connection.

Clearing of the connection is the responsibility of the Originator.

6.2.2 Message Centre Monitoring

A Message Centre shall be able to inform the Served User about changes in the Served User's Mailbox, e.g. after the receipt of a New Message or after a Message has been retrieved.

The procedures needed for this functionality are defined in Message Waiting Indication and Message Centre Monitoring.

6.2.3 Message Browsing

A Message Centre may be able to allow the Served User to browse through the messages in the Served User's mailbox regardless whether the messages are new or already retrieved.

The procedures needed for this functionality are defined in Simple Dialog and Message Centre Monitoring.

NOTE Procedures using DTMF and announcements may be required for certain profiles or if Simple Dialog and Message Centre Monitoring are not implemented.

--`,,`-`-`,,`,,`,`,,`---

© ISO/IEC 2004 – All rights reserved
Copyright International Organization for Standardization
Reproduced by IHS under license with ISO
No reproduction or networking permitted without license from IHS
Not for Resale

6.2.4 Message Retrieval

A Message Centre shall be able to allow the Served User to retrieve messages from the Served User's mailbox.

The procedures needed for this functionality are defined in Simple Dialog, Message Centre Monitoring and Make Call Request.

NOTE Procedures using DTMF and announcements may be required for certain profiles or if Simple Dialog is not implemented.

6.2.5 Message Centre Transfer

A Message Centre may be able to connect the Served User to the Originator of a Message or any other destination.

The procedures related to this functionality are defined in Call Transfer, Single Step Call Transfer and Make Call Request.

7 Profiles

7.1 MCA-Profile-1

7.1.1 Message Deposit

Various message types may be accepted depending on the capabilities of the Message Centre.

7.1.1.1 Direct Message Deposit

Two procedures may be used in order to access the mailbox of the Served User:

1. Direct Access: the Mailbox of the Served User is identified using the Served User's individual Party Number (or a Message Centre Party Number in combination with an individual Subaddress).

   NOTE The individual Party Number may consist of a prefix identifying the Message Centre and the Party Number of the Served User, e.g. if the Message Centre is identified by 1234 and Served User's Party Number is 9876, then a Called Party Number 12349876 may identify the Served User's mailbox at the Message Centre.

2. Indirect Access: the Originator sets up a call related connection to the Message Centre using the Complete Number of the Message Centre. The Message Centre uses announcements and the Calling User identifies the Served User's mailbox by sending DTMF.

After being connected to the Served User's Mailbox the Originator may deposit a message.

The type of message shall be identified by the encoding of the Bearer Capability and High Layer Compatibility Information Elements in the SETUP message. After deposit of a new message the Message Centre PINX shall send a mwiActivate invoke APDU to the Served User PINX according to ISO/IEC 15506.

7.1.1.2 Message Deposit after Diversion

After the Originator's call is diverted to the Message Centre, the Served User shall be identified using either information provided in element divertingNr or, in case of multiple diversion, in element originalCalledNr of the received divertingLegInformation2 invoke APDU. If both elements are present it is up to the implementation and/or administration of the Message Centre which mailbox is appropriate.

© ISO/IEC 2004 All rights reserved

Copyright International Organization for Standardization
Reproduced by IHS under license with ISO
No reproduction or networking permitted without license from IHS
Not for Resale

After being connected to the Served User's Mailbox the Originator may deposit a message. The type of message shall be identified by the encoding of the Bearer Capability and High Layer Compatibility Information Elements in the SETUP message.

After deposit of a new message the Message Centre shall send a mwiActivate invoke APDU to the Served User PINX according to ISO/IEC 15506.

7.1.1.3 Message Deposit after Transfer

In order to transfer the Originator to the Served User's mailbox the Transferring User establishes a Call to the Message Centre. The Served User's mailbox shall be identified using either of the procedures as described in 7.1.1.1. In either case, on receipt of a ctComplete invoke APDU, the Message Centre PINX shall stop any procedures for message deposit and/or announcements related to the call of the Transferring User and shall start new procedures for message deposit and/or give new announcements related to the call of the Originator.

After being connected to the Served User's Mailbox the Originator may deposit a message. The type of message shall be identified by the encoding of the Bearer Capability and High Layer Compatibility Information Elements in the SETUP message.

After deposit of a new message the Message Centre shall send a mwiActivate invoke APDUto the Served User PINX according to ISO/IEC 15506.

7.1.2 Message Centre Monitoring

The Message Centre and the Served User shall use procedures as described ISO/IEC 15506 for Message Centre Monitoring purposes.

7.1.3 Message Browsing

In order to browse through messages the Served User shall establish a Basic Call (as defined in ISO/IEC 11572) with the Message Centre. The Served User may be requested to provide authentication to the Message Centre and shall then send the authentication using DTMF.

The Message Centre shall indicate available messages and browsing options for the Served User by announcements.

For message browsing the Message Centre shall act on DTMF provided by the Served User.

7.1.4 Message Retrieval

The Served User indicates the request for retrieval of a message via DTMF provided by the Served User using the already established Basic Call for Message Browsing.

The Message Centre introduces the retrieved messages of type Basic Service (as defined in ISO/IEC 15506) in an appropriate form into the B-channel. The retrieval of other message types is out of the scope of this International Standard.

NOTE Other messages may be converted in a way appropriate to be introduced into the B-Channel, e.g. email may be announced to the Served User using an email-to-speech service.

7.1.5 Message Centre Transfer

The Served User may indicate the request for transfer to the Originator of a message or any other destination via DTMF provided by the Served User using the already established Basic Call for Message Browsing.

If Address Information of the Originator is available, the Message Centre PINX shall set up the Secondary Call and shall act according to the procedures described in Call Transfer on receipt of an ALERTING or a CONNECT Message from the Originating PINX.

--`,,`-`-`,,`,,`,`,,`---

© ISO/IEC 2004 – All rights reserved
Copyright International Organization for Standardization
Reproduced by IHS under license with ISO
No reproduction or networking permitted without license from IHS
Not for Resale

7.2 MCA-Profile-2

In addition to MCA-Profile-1, Simple Dialog shall be supported by the Message Centre PINX and the Served User PINX. Simple Dialog shall replace the procedures using DTMF and announcements described in 7.1.

A Message Centre PINX and a Served User PINX complying with MCA-Profile-2 shall be capable of using DTMF and announcements as described in 7.1. This provides interoperability, if a Served User PINX complying with MCA-Profile-1 is connected to a Message Centre PINX complying with MCA-Profile-2, or vice versa.

7.2.1 Message Deposit

The same procedures as described in 7.1.1 for Message Deposit in MCA-Profile-1 shall apply. If Simple Dialog is supported by the Originating User PINX, then Simple Dialog shall replace the procedures using DTMF and announcements described in 7.1.

NOTE Interworking between Simple Dialog and DTMF is not required and is outside the scope of this International Standard.

7.2.1.1 Message Deposit after Single-Step Call Transfer

In order to transfer the Originator to the Served User's mailbox the Transferring User shall provide the Complete Number to identify the Served User’s mailbox. This Number is transported in element rerouteingNumber in the ssctInitiate invoke APDU, which is used for the Called Party Number IE in the SETUP message sent to the Message Centre.

After being connected to the Served User's Mailbox the Originator may deposit a message.

After deposit of a new message the Message Centre shall send a mwiActivate invoke APDU to the Served User PINX according to ISO/IEC 15506.

7.2.2 Message Centre Monitoring

The same procedures as described in 7.1.2 for Message Centre Monitoring in MCA-Profile-1 shall apply.

7.2.3 Message Browsing

The same procedures as described in 7.1.3 for Message Browsing in MCA-Profile-1 shall apply to connect the Served User to the Message Centre.

The communication (including authentication) between Message Centre and Served User shall use Simple Dialog on the call reference of the call between Message Centre and Served User, if both Served User PINX and Message Centre PINX support MCA-Profile-2.

Optionally, the Message Centre may assist the Served User using announcements. If either the Message Centre PINX or the Served User PINX supports only MCA-Profile-1 and does not support Simple Dialog, then the PINX supporting MCA-Profile-2 shall fall back to procedures described in 7.1.3.

NOTE Using DTMF and announcements may also be required if the Served User accesses the Served User's mailbox from the Public Network.

7.2.4 Message Retrieval

The Served User PINX shall indicate the request for retrieval of a message by sending an appropriate keypad invoke APDU to the Message Centre PINX. The Message Centre delivers the retrieved message using the Basic Call already established for Message Browsing.

© ISO/IEC 2004 All rights reserved

Copyright International Organization for Standardization
Reproduced by IHS under license with ISO
No reproduction or networking permitted without license from IHS
Not for Resale

The Message Centre introduces the retrieved messages of type Basic Service (as defined in ISO/IEC 15506) in an appropriate form into the B-channel. The retrieval of other message types is outside the scope of this International Standard.

NOTE Other messages may be converted in a way appropriate to be introduced into the B-Channel, e.g. email may be announced to the Served User using an email-to-speech service.

If either the Message Centre PINX or the Served User PINX supports only MCA-Profile-1 and does not support Simple Dialog, then the PINX supporting MCA-Profile-2 shall fall back to procedures as described in 7.1.4.

7.2.5 Message Centre Transfer

7.2.5.1 Message Centre Transfer using Single Step Call Transfer

After browsing through the Served User's mailbox the Served User may indicate the request for transfer to the Originator of a message or any other destination via Simple Dialog using the already established call for Message Browsing.

If Address Information of the Originator is available, the Message Centre PINX shall send a ssctInitiate invoke APDU transporting the Party Number of the Originator of the Message in element rerouteingNumber towards the Served User PINX. On receipt of a ssctInitiate.rej APDU from the Served User PINX the Message Centre PINX shall fall back to Call Transfer procedures as described in 7.2.5.2.

7.2.5.2 Message Centre Transfer using Call Transfer

The same procedures as described in 7.1.5 for Message Centre Transfer in MCA-Profile-1 shall apply, except that the communication between Message Centre and Served User shall use Simple Dialog, if both, Served User PINX and Message Centre PINX support Profile 2.

If either the Message Centre PINX or the Served User PINX support only Profile 1, then the PINX supporting Profile 2 shall use fall back to procedures as described in 7.1.5.

7.3 MCA-Profile-3

Message Waiting Indication shall be replaced by Message Centre Monitoring (ISO/IEC 20117) in MCA-Profile-3. Mailbox Identification shall be supported at the Message Centre PINX and may be supported at the Served User PINX. Simple Dialog shall be supported as described in 7.2.

A Message Centre PINX and a Served User PINX complying with MCA-Profile-3 shall be capable of using DTMF and announcements as described in 7.1. This provides interoperability if Simple Dialog is not implemented at the PINX where the Originator of a message is located.

Provision of DTMF and announcements may offer a reduced functionality if Served Users access their mailbox from the public network (for example).

NOTE Interworking between Simple Dialog and DTMF is not required and therefore outside of scope of this International Standard.

7.3.1 Message Deposit

The same procedures as described in 7.2.1 for Message Deposit in MCA-Profile-2 shall apply, despite that Message Centre shall send a mCMNewMsg invoke APDU towards the Served User PINX according to Message Centre Monitoring instead of a mwiActivate invoke APDU according to Message Waiting Indication.

If the Served User owns more than one mailbox at the Message Centre, the Message Centre PINX shall identify the specific mailbox by sending a mIDMailboxID invoke APDU and shall send the mCMNewMsg invoke APDU after receipt of the mIDMailboxID return result APDU.

-`````,,`-`-`,,`,,`,`,,`---

© ISO/IEC 2004 – All rights reserved
Copyright International Organization for Standardization
Reproduced by IHS under license with ISO
No reproduction or networking permitted without license from IHS
Not for Resale

7.3.2 Message Centre Monitoring

The Message Centre and the Served User shall use procedures as described in ISO/IEC 20117 for Message Centre Monitoring purposes.

If a Served User owns more than one mailbox at a Message Centre:

— the Message Centre PINX shall identify the specific mailbox by sending a mIDMailboxID invoke APDU. On receipt of a mIDMailboxID return result APDU, the Message Centre PINX shall send the APDUs defined in Message Centre Monitoring. Subsequent APDUs are related to the mailbox indicated in the latest mIDMailboxID invoke APDU;

— the Served User PINX shall identify the specific mailbox by sending a mIDMailboxAuth invoke APDU. After sending of the mIDMailboxAuth return result APDU, the Message Centre PINX shall send the APDUs defined in Message Centre Monitoring. Subsequent APDUs are related to the mailbox indicated in the latest mIDMailboxAuth invoke APDU.

If an APDU refers to a new mailbox, then a mIDMailboxID/mIDMailboxAuth invoke APDU shall be sent before this APDU and the APDUs defined in Message Centre Monitoring shall be sent after receipt of the mIDMailboxID/mIDMailboxAuth return result APDU.

7.3.3 Message Browsing

The same procedures as described in Message Centre Monitoring (ISO/IEC 20117) shall apply.

Optionally, the Message Centre may assist the Served User using announcements. If either the Message Centre PINX or the Served User PINX supports only MCA-Profile-1 and does not support Simple Dialog, then the PINX supporting MCA-Profile-3 shall fall back to procedures described in 7.1.3.

NOTE Using DTMF and announcements may also be required if Served Users access their mailbox from the Public Network (for example).

For authentication purposes the Served User shall use Mailbox Identification, if available at the Served User PINX. If Mailbox Identification is not available at the Served User PINX, Simple Dialog may be used instead.

If a Served User owns more than one mailbox at a Message Centre:

— the Message Centre PINX shall identify the specific mailbox by sending a mIDMailboxID invoke APDU. On receipt of a mIDMailboxID return result APDU, the Message Centre PINX shall send the APDUs defined in Message Centre Monitoring. Subsequent APDUs are related to the mailbox indicated in the latest mIDMailboxID invoke APDU;

— the Served User PINX shall identify the specific mailbox by sending a mIDMailboxAuth invoke APDU. After sending of a mIDMailboxAuth return result APDU, the Message Centre PINX shall send the APDUs defined in Message Centre Monitoring. Subsequent APDUs are related to the mailbox indicated in the latest mIDMailboxAuth invoke APDU.

If an APDU refers to a new mailbox, then a mIDMailboxID/mIDMailboxAuth invoke APDU shall be sent before this APDU and the APDUs defined in ISO/IEC 20117 shall be sent after receipt of the mIDMailboxID/mIDMailboxAuth return result APDU.

7.3.4 Message Retrieval

The same procedures as described in 7.2.4 for Message Deposit in MCA-Profile-2 shall apply.

7.3.5 Message Centre Transfer

The same procedures as described in 7.2.5 for Message Centre Transfer in MCA-Profile-2 shall apply.

© ISO/IEC 2004 All rights reserved

Copyright International Organization for Standardization
Reproduced by IHS under license with ISO
No reproduction or networking permitted without license from IHS
Not for Resale

7.4 MCA-Profile-4

In addition to MCA-Profile-3, Make Call Request shall be supported by the Message Centre PINX and the Served User PINX. This allows a communication between the Message Centre PINX and the Served User PINX, which only requires a CISC (Call Independent Signalling Connection). A B-channel, required for message retrieval, can be allocated dynamically and on-demand using Make Call Request.

A Message Centre PINX and a Served User PINX complying with MCA-Profile-4 shall be capable of using DTMF and announcements as described in 7.1. This provides interoperability if Simple Dialog is not implemented at the PINX where the Originator of a message is located.

Provision of DTMF and announcements may offer a reduced functionality, if the Served Users access their mailbox from the public network (for example).

7.4.1 Message Deposit

The same procedures as described in 7.3.1 for Message Deposit in MCA-Profile-3 shall apply.

7.4.2 Message Centre Monitoring

The same procedures as described in 7.3.2 for Message Centre Monitoring in MCA-Profile-3 shall apply.

7.4.3 Message Browsing

In order to browse through new and/or retrieved messages the Served User shall establish or use an already existing call independent signalling connection to the Message Centre. For authentication purposes the Served User shall use Mailbox Identification, if available at the Served User PINX. If Mailbox Identification is not available at the Served User PINX, Simple Dialog may be used instead as specified in 7.3.3.

The communication between Message Centre and Served User shall use Simple Dialog. The Message Centre shall indicate the available messages for the Served User using Message Centre Monitoring. The Served User shall indicate actions to be taken on a specific message by sending one or more keypad invoke APDUs to the Message Centre.

Optionally, the Message Centre may assist the Served User using announcements. In order to provide such announcements the Message Centre shall request the Served User PINX to provide a User Information Channel using Make Call Request as described in 7.4.4. The call independent signalling connection shall be retained for the duration of the browsing session and may be retained for further communication between the Message Centre and the Served User (e.g. for Message Retrieval).

7.4.4 Message Retrieval

In order to retrieve a message the Served User shall establish or use an already existing call independent signalling connection to the Message Centre. If not already authenticated, Served Users may authenticate themselves to the Message Centre using Mailbox Identification or Simple Dialog as specified in 7.3.4. The Served User PINX responds to a request for message retrieval by sending an appropriate indication in a keypad invoke APDU as specified in Simple Dialog towards the Message Centre PINX.

In order to establish a B-Channel necessary for message retrieval, the Message Centre shall request the Served User PINX to provide a B-Channel using Make Call Request. The Message Centre PINX shall send a mcRequest invoke APDU to the Served User PINX. The mcRequest invoke APDU shall be provided with:

- element calltype set to a value appropriate for the message type of the message to be retrieved,
- element destinationAddress set to the Party Number of the Message Centre PINX or the Party Number identifying the Served User's mailbox as defined for message deposit in 7.1.1.1,

© ISO/IEC 2004 – All rights reserved
Copyright International Organization for Standardization
Reproduced by IHS under license with ISO
No reproduction or networking permitted without license from IHS
Not for Resale

- element correlation in order to allow the correlation of the B-Channel connection to the call independent signalling connection used for communication between Message Centre and Served User.

Clearing of the B-channel connection is the responsibility of the Message Centre. The call independent signalling connection may be retained for further communication between the Message Centre and the Served User (e.g. for Message Browsing).

7.4.5 Message Centre Transfer

For transfer using Call Transfer or Single Step Call Transfer the same procedures as described in 7.2.5 for MCA-Profile-2 shall apply.

7.4.5.1 Message Centre Transfer using Make Call Request

The Served User may request transfer (e.g. after browsing) to the Originator of a message or any other destination via Simple Dialog using a new or existing call independent signalling connection to the Message Centre.

If Address Information of the Originator is available, the Message Centre PINX shall send a mcRequest invoke APDU to the Served User PINX. The mcRequest invoke APDU shall be provided with:

- element calltype set to an appropriate value,
- element clearOrigCall shall be omitted implying retention of the call independent signalling connection,
- element destinationAddress set to the Party Number of the Originator,
- element correlation in order to allow the correlation of the call to the Originator with the call independent signalling connection used for communication between Message Centre and Served User.

After release of, or during, the requested call to the Originator the communication between the Message Centre and the Served User may continue using Simple Dialog and/or Message Centre Monitoring. A refresh of the Served User's display may be required due to implementation-specific scenarios.

The call independent signalling connection may be retained for further communication between the Message Centre and the Served User.

© ISO/IEC 2004 All rights reserved
Copyright International Organization for Standardization
Reproduced by IHS under license with ISO
No reproduction or networking permitted without license from IHS
Not for Resale

Annex A
(normative)

Requirements List (RL)

A.1 General

Use of this International Standard imposes requirements on the implementation that go beyond those of the base standards referred to by this International Standard. These result in modifications to the requirements expressed in the PICS proformas for the base standards. This Annex specifies the modifications (the Requirements List - RL) that apply to the status of the items affected in each PICS proforma, with consequently modified requirements on the answers to be provided.

The status notation used in this Annex is that defined in ISO/IEC 9646-7. In summary, the meaning of the notations is as follows:

i Irrelevant or out-of-scope - this capability is outside the scope of this profile and is not subject to conformance testing in this context.

m Mandatory - the capability is required to be supported.

n/a Not Applicable - in the given context, it is impossible to use the capability.

o Optional - the capability may be supported or not.

o.i qualified optional - for mutually exclusive or selectable options from a set. "i" is an integer that identifies an unique group of related optional items and the logic of their selection, defined below the Table.

x eXcluded or prohibited - there is a requirement not to support this capability in this profile.

The Requirements List in this Annex shall be used to restrict the permitted support answers in the corresponding PICS.

A.2 Relationship between RL and corresponding PICS proformas

In the context of the profile specification contained in this International Standard, PICS proformas of the base protocol standards contain tables in 3 categories. The 3 categories are:

— Those proforma tables where this profile does not restrict the permitted support answers;

— Those proforma tables where this profile restricts the permitted support answers;

— Those proforma tables that are not relevant to this profile.

The Requirements List consists of the tables falling into the second category, with an indication of the modified items in those tables.

--`,,`-`-`,,`,,`,`,,`---
© ISO/IEC 2004 – All rights reserved
Copyright International Organization for Standardization
Reproduced by IHS under license with ISO
No reproduction or networking permitted without license from IHS
Not for Resale

A.3 Requirement List

A.3.1 Tables for Profile 1

Item	Question/Feature	Reference	Profile Status
P1.M	Behaviour as Message Centre PINX according to MCA-Profile-1	7.1	o.1
P1.S	Behaviour as Served User PINX according to MCA-Profile-1	7.1	o.1

A.3.1.1 Support of Supplementary Services

Item	Question/Feature	Reference	Profile Status
P1.1	Support of SS-MWI at Message Centre PINX	ISO/IEC 15506	P1.M:m
P1.2	Support of SS-MWI at Served User PINX	ISO/IEC 15506	P1.S:m
P1.3	Support of SS-DIV at Message Centre PINX	ISO/IEC 13873	P1.M:m
P1.4	Support of SS-DIV at Served User PINX	ISO/IEC 13873	P1.S:m
P1.5	Support of SS-CT at Message Centre PINX	ISO/IEC 13869	P1.M:m
P1.6	Support of SS-CT at Served User PINX	ISO/IEC 13869	P1.S:m

A.3.1.2 Supplementary Service Message Waiting Indication

Item number and references refer to Annex A of ISO/IEC 15506.

© ISO/IEC 2004 All rights reserved

Copyright International Organization for Standardization
Reproduced by IHS under license with ISO
No reproduction or networking permitted without license from IHS
Not for Resale

A.3.1.2.1 General

Item	Question/Feature	Reference	Protocol Status	Profile Status
A1	Behaviour as Message Centre PINX for activation and deactivation of SS-MWI		o.1	P1.M:m
A2	Behaviour as Message Centre PINX for interrogation of SS-MWI		A1:o	P1.M:o
A3	Behaviour as Served User PINX for activation and deactivation of SS-MWI		o.1	P1.S:m
A4	Behaviour as Served User PINX for interrogation of SS-MWI		A3:o	P1.S:o
A5	Behaviour as Incoming Gateway PINX for interworking with a public ISDN for activation and deactivation of SS-MWI		o	i
A6	Behaviour as Outgoing Gateway PINX for interworking with a public ISDN for activation and deactivation of SS-MWI		o	i

A.3.1.2.2 Procedures

Item	Question/Feature	Reference	Protocol Status	Profile Status
B1	Support of relevant ISO/IEC 11582 procedures at the. Message Centre PINX	6.2.1	A1:m	P1.M:m
B2	Support of relevant ISO/IEC 11582 procedures at the Served User PINX	6.2.2	A3:m	P1.S:m
B3	Procedures at the Message Centre PINX for activation and deactivation	6.5.1	A1:m	P1.M:m
B4	Procedures at the Message Centre PINX for interrogation	6.5.1	A2:m	A2:m
B5	Procedures at the Served User PINX for activation and deactivation	6.5.2	A3:m	P1.S:m
B6	Procedures at the Served User PINX for interrogation	6.5.2	A4:m	A4:m
B7	Procedures at an Incoming Gateway PINX for interworking with a public ISDN for activation and deactivation	6.6.1	A5:m	i
B8	Procedures at an Outgoing Gateway PINX for interworking with a public ISDN for activation and deactivation	6.6.2	A6:m	i

© ISO/IEC 2004 – All rights reserved
Copyright International Organization for Standardization
Reproduced by IHS under license with ISO
No reproduction or networking permitted without license from IHS
Not for Resale

A.3.1.2.3 Coding

Item	Question/Feature	Reference	Protocol Status	Profile Status
C1	Sending of mwiActivate invoke APDU and receipt of mwiActivate return result and error APDU	6.3.1	A1:m	P1.M:m
C2	Receipt of mwiActivate invoke APDU and sending of mwiActivate return result and error APDU	6.3.1	A3:m	P1.S:m
C3	Sending of mwiDeactivate invoke APDU and receipt of mwiDeactivate return result and error APDU	6.3.1	A1:m	P1.M:m
C4	Receipt of mwiDeactivate invoke APDU and sending of mwiDeactivate return result and error APDU	6.3.1	A3:m	P1.S:m
C5	Sending of mwiInterrogate invoke APDU and receipt of mwiInterrogate return result and error APDU	6.3.1	A4:m	A4:m
C6	Receipt of mwiInterrogate invoke APDU and sending of mwiInterrogate return result and error APDU	6.3.1	A2:m	A2:m

A.3.1.2.4 Timers

Item	Question/Feature	Reference	Protocol Status	Profile Status
D1	Support of timer T1	6.9.1	A1:m	P1.M:m
D2	Support of timer T2	6.9.2	A4:m	A4:m

A.3.1.3 Supplementary Service Call Diversion

Item numbers and references refer to Annex A of ISO/IEC 13873.

© ISO/IEC 2004 All rights reserved

Copyright International Organization for Standardization
Reproduced by IHS under license with ISO
No reproduction or networking permitted without license from IHS
Not for Resale

A.3.1.3.1 General

Item	Question/Feature	Reference	Protocol Status	Profile Status
A1	Support of SS-CFU		o.1	o.1
A2	Support of SS-CFB		o.1	o.1
A3	Support of SS-CFNR		o.1	o.1
A4	Support of SS-CDI		o.1	o.1
A5	Support of SS-CDA		o.1	o.1
A6	Behaviour as Originating PINX		o.2	i
A7	Behaviour as Terminating PINX		o.2	m
A8	Behaviour as Transit PINX		o.2	i
A9	Behaviour as Incoming Gateway PINX		o.2	i
A10	Behaviour as Outgoing Gateway PINX		o.2	i

A.3.1.3.2 Procedures

Item	Question/Feature	Reference	Protocol Status	Profile Status
B1	Procedures at the Originating PINX	6.5.1	A6:m	i
B2	Procedures at the Transit PINX	6.5.2	A8:m	i
B3	Procedures at the Rerouteing PINX	6.5.4	c.1	P1.S:m
B4	Procedures at the Served User PINX activation	6.5.3.1.1 6.5.3.2.1	A7:o	i
B5	Procedures at the Served User PINX deactivation	6.5.3.1.2 6.5.3.2.2	A7:o	i
B6	Procedures at the Served User PINX interrogation	6.5.3.1.3 6.5.3.2.3	A7:o	i
B7	Procedures at the Served User PINX verification of diverted-to number	6.5.3.1.4 6.5.3.2.4	A7:o	P1.S:o
B8	Procedures at the Served User PINX invocation	6.5.3.1.5 6.5.3.2.5	A7:m	P1.S:m
B9	Procedures at the Diverted-to PINX invocation	6.5.5.1.1 6.5.5.2.1	A7:m	P1.M:m
B10	Procedures at the Diverted-to PINX verification of diverted-to number	6.5.5.1.2 6.5.5.2.2	A7:o	P1.M:o
B11	Procedures at the Activating PINX	6.5.6	o	i
B12	Procedures at the Deactivating PINX	6.5.7	o	i
B13	Procedures at the Interrogation PINX	6.5.8	o	i

--`,,`-`-`,,`,,`,`,,`---

© ISO/IEC 2004 – All rights reserved
Copyright International Organization for Standardization
Reproduced by IHS under license with ISO
No reproduction or networking permitted without license from IHS
Not for Resale

Item	Question/Feature	Reference	Protocol Status	Profile Status
B14	Procedures at the Incoming Gateway PINX to public ISDN, diverting within the PISN	6.6.1.1	A9:m	i
B15	Procedures at the Incoming Gateway PINX, diverting within the public ISDN	6.6.1.2	A9:m	i
B16	Procedures at the Incoming Gateway PINX to public ISDN, partial rerouteing	6.6.1.3	A9:o	i
B17	Procedures at the Outgoing Gateway PINX to public ISDN, diverting within the PISN	6.6.2.1	A10:m	i
B18	Procedures at the Outgoing Gateway PINX. diverting within the public ISDN	6.6.2.2	A10:m	i
B19	Procedures at the Incoming Gateway PINX to another network (Non-ISDN)	6.7.1	A9:o	i
B20	Procedures at the Outgoing Gateway PINX to another network (Non-ISDN)	6.7.2	A10:o	i

c.1: if A6 or A9 then mandatory
else if A7 then optional else N/A

A.3.1.3.3 Coding

Item	Question/Feature	Reference	Protocol Status	Profile Status
C1	Sending of redirectionName element in divertingLegInformation3 APDU	6.3.1	B9:o	P1.M:o
C2	Receipt of redirectionName element in divertingLegInformation3 APDU	6.3.1	B1:o	i
C3	Sending of redirectingName element in callRerouteing and divertingLegInformation2 APDUs	6.3.1	c.2	o
C4	Receipt of redirectingName element in callRerouteing and divertingLegInformation2 APDUs	6.3.1	c.3	o
C5	Sending of originalCalledName element in callRerouteing and divertingLegInformation2 APDUs	6.3.1	c.2	o
C6	Receipt of originalCalledName element in callRerouteing and divertingLegInformation2 APDUs	6.3.1	c.3	o
C7	Sending of activateDiversionQ invoke APDU and receipt of return result and return error APDUs	6.3.1	B11:m	i
C8	Receipt of activateDiversionQ invoke APDU and sending of return result and return error APDUs	6.3.1	B4:m	i

© ISO/IEC 2004 All rights reserved

Copyright International Organization for Standardization
Reproduced by IHS under license with ISO
No reproduction or networking permitted without license from IHS
Not for Resale

Item	Question/Feature	Reference	Protocol Status	Profile Status
C9	Sending of deactivateDiversionQ invoke APDU and receipt of return result and return error APDUs	6.3.1	B12:m	i
C10	Receipt of deactivateDiversionQ invoke APDU and sending of return result and return error APDUs	6.3.1	B5:m	i
C11	Sending of interrogateDiversionQ invoke APDU and receipt of return result and return error APDUs	6.3.1	B13:m	i
C12	Receipt of interrogateDiversionQ invoke APDU and sending of return result and return error APDUs	6.3.1	B6:m	i
C13	Sending of checkRestriction invoke APDU and receipt of return result and return error APDUs	6.3.1	B7:m	B7:m
C14	Receipt of checkRestriction invoke APDU and sending of return result and return error APDUs	6.3.1	B10:m	B10:m
C15	Sending of callRerouteing invoke APDU and receipt of return result and return error APDUs	6.3.1	B8:m	P1.S:m
C16	Receipt of callRerouteing invoke APDU and sending of return result and return error APDUs	6.3.1	B3:m	B3:m
C17	Sending of divertingLegInformation1 invoke APDU	6.3.1	B3:m	B3:m
C18	Receipt of divertingLegInformation1 invoke APDU	6.3.1	B1:m	i
C19	Sending of divertingLegInformation2 invoke APDU	6.3.1	B3:m	B3:m
C20	Receipt of divertingLegInformation2 invoke APDU	6.3.1	B9:m	B9:m
C21	Sending of divertingLegInformation3 invoke APDU	6.3.1	B9:m	B9:m
C22	Receipt of divertingLegInformation3 invoke APDU	6.3.1	B1:m	i
C23	Sending of cfnrDivertedLegFailed invoke APDU	6.3.1	c.4	c.4
C24	Receipt of cfnrDivertedLegFailed invoke APDU	6.3.1	c.5	c.5
C25	Sending of Notification indicator containing "call is diverted" or embedded Redirection number information element	6.3.2.2	c.6	i
C26	Recognition of "call is diverted" notification and embedded Redirection number information element in received Notification information element	6.3.2.2	c.7	i

© ISO/IEC 2004 – All rights reserved
Copyright International Organization for Standardization
Reproduced by IHS under license with ISO
No reproduction or networking permitted without license from IHS
Not for Resale

c.2 if B3 or B8 then optional, else N/A
c.3 if B3 or B9 then optional, else N/A
c.4 if B3 and A3 then mandatory, else N/A
c.5 if B8 and A3 then mandatory, else N/A
c.6 if B18 or B20 then mandatory, else N/A
c.7 if B1 or B14 or B19 then optional, else N/A

A.3.1.3.4 Timers

Item	Question/Feature	Reference	Protocol Status	Profile Status
D1	Support of timer T1	6.8.1	B8:m	B8:m
D2	Support of timer T2	6.8.2	B11:m	i
D3	Support of timer T3	6.8.3	B12:m	i
D4	Support of timer T4	6.8.4	B13:m	i
D5	Support of timer T5	6.8.5	B7:m	B7:m

A.3.1.4 Supplementary Service Call Transfer

Item numbers and references refer to Annex A of ISO/IEC 13869.

A.3.1.4.1 General

Item	Question/Feature	Reference	Protocol Status	Profile Status
A1	Support of SS-CT by join		m	m
A2	Support of SS-CT by rerouteing		o	o

A.3.1.4.2 Procedures for SS-CT-Join

Item	Question/Feature	Reference	Protocol Status	Profile Status
B1	Support of relevant ISO/IEC 11572 and ISO/IEC 11582 procedures	6.2	m	m
B2	Signalling procedures at a Transferring PINX	6.5.1.1, 6.5.1.2	m	m
B3	Signalling procedures at a Transferring PINX for interworking with a non-ISDN	6.7.2	m	m

© ISO/IEC 2004 All rights reserved

Copyright International Organization for Standardization
Reproduced by IHS under license with ISO
No reproduction or networking permitted without license from IHS
Not for Resale

Item	Question/Feature	Reference	Protocol Status	Profile Status
B4	Signalling procedures at a Primary PINX	6.5.2.1, 6.5.2.2, 6.5.5	m	m
B5	Signalling procedures at a Secondary PINX	6.5.3.1, 6.5.3.2, 6.5.5	m	m
B6	Behaviour as Gateway PINX to a public ISDN to support transfer of users in the ISDN by a user in the PISN	6.6.1.1	o	i
B7	Behaviour as Gateway PINX to a public ISDN to support transfer of users in the PISN by a user in the ISDN	6.6.1.2	o	i
B8	Behaviour as Gateway PINX to a non-ISDN to support transfer of users in the other network by a user in the PISN	6.7.1.1	o	i
B9	Behaviour as Gateway PINX to a non-ISDN to support transfer of users in the PISN by a user in the other network	6.7.1.2	o	i

A.3.1.4.3 Additional procedures for SS-CT-Rerouteing

Item	Question/Feature	Reference	Protocol Status	Profile Status
C1	Signalling procedures at a Transferring PINX	6.5.1.3, 6.5.1.4	A2:m	A2:m
C2	Signalling procedures at a Primary PINX	6.5.2.3, 6.5.2.4, 6.5.5	A2:m	A2:m
C3	Signalling procedures at a Secondary PINX	6.5.3.3, 6.5.3.4, 6.5.5	A2:m	A2:m
C4	Behaviour as Gateway PINX to a public ISDN to support transfer of users in the ISDN by a user in the PISN (using transfer by rerouteing in the PISN)	6.6.1.1	o	i
C5	Behaviour as Gateway PINX to a non-ISDN to support transfer of users in the other network by a user in the PISN (using transfer by rerouteing procedures)	6.7.1.1	o	i
C6	Behaviour as Gateway PINX to a non-ISDN to support transfer of users in the PISN by a user in the other network (using transfer by rerouteing procedures)	6.7.1.3	o	i

© ISO/IEC 2004 – All rights reserved
Copyright International Organization for Standardization
Reproduced by IHS under license with ISO
No reproduction or networking permitted without license from IHS
Not for Resale

A.3.1.4.4 Coding

Item	Question/Feature	Reference	Protocol Status	Profile Status
D1	Sending of callTransferComplete invoke APDU	6.3	m	m
D2	Sending of callTransferActive invoke APDU	6.3	m	m
D3	Receipt of callTransferComplete invoke APDU	6.3	m	m
D4	Receipt of callTransferActive invoke APDU	6.3	m	m
D5	Sending of callTransferUpdate invoke APDU	6.3	o	o
D6	Receipt of callTransferUpdate invoke APDU	6.3	m	m
D7	Sending of subaddressTransfer invoke APDU	6.3	o	o
D8	Receipt of subaddressTransfer invoke APDU	6.3	m	m
D9	Sending of callTransferIdentify invoke APDU and receipt of return result and return error APDUs	6.3	A2:m	A2:m
D10	Sending of callTransferInitiate invoke APDU and receipt of return result and return error APDUs	6.3	A2:m	A2:m
D11	Sending of callTransferSetup invoke APDU and receipt of return result and return error APDUs	6.3	A2:m	A2:m
D12	Receipt of callTransferIdentify invoke APDU and sending of return result and return error APDUs	6.3	A2:m	A2:m
D13	Receipt of callTransferInitiate invoke APDU and sending of return result and return error APDUs	6.3	A2:m	A2:m
D14	Receipt of callTransferSetup invoke ADPU and sending of return result and return error APDUs	6.3	A2:m	A2:m
D15	Sending of callTransferAbandon invoke APDU	6.3	A2:m	A2:m
D16	Receipt of callTransferAbandon invoke APDU	6.3	A2:m	A2:m

© ISO/IEC 2004 All rights reserved

Copyright International Organization for Standardization
Reproduced by IHS under license with ISO
No reproduction or networking permitted without license from IHS
Not for Resale

A.3.2 Tables for Profile 2

Item	Question/Feature	Reference	Profile Status
P2.M	Behaviour as Message Centre PINX according to MCA-Profile-2	7.2	o.1
P2.S	Behaviour as Served User PINX according to MCA-Profile-2	7.2	o.1

A.3.2.1 Support of Supplementary Services

Item	Question/Feature	Reference	Profile Status
P2.1	Support of SS-MWI at Message Centre PINX	ISO/IEC 15506	P2.M:m
P2.2	Support of SS-MWI at Served User PINX	ISO/IEC 15506	P2.S:m
P2.3	Support of SS-SD at Message Centre PINX	ISO/IEC 21408	P2.M:m
P2.4	Support of SS-SD at Served User PINX	ISO/IEC 21408	P2.S:m
P2.5	Support of SS-DIV at Message Centre PINX	ISO/IEC 13873	P2.M:m
P2.6	Support of SS-DIV at Served User PINX	ISO/IEC 13873	P2.S:m
P2.7	Support of SS-SSCT at Message Centre PINX	ISO/IEC 19460	P2.M:m
P2.8	Support of SS-SSCT at Served User PINX	ISO/IEC 19460	P2.S:o
P2.9	Support of SS-CT at Message Centre PINX	ISO/IEC 13869	P2.M:m
P2.10	Support of SS-CT at Served User PINX	ISO/IEC 13869	P2.S:m

A.3.2.2 Supplementary Service Message Waiting Indication

As specified in A.3.1.2.

A.3.2.3 Supplementary Service Simple Dialog

Item number and references refer to Annex A of ISO/IEC 21408.

© ISO/IEC 2004 – All rights reserved
Copyright International Organization for Standardization
Reproduced by IHS under license with ISO
No reproduction or networking permitted without license from IHS
Not for Resale

A.3.2.3.1 General

Item	Question/Feature	Reference	Protocol Status	Profile Status
A1	Behaviour as Client User PINX for SS-SD		o.1	P2.4:m
A2	Behaviour as Server User PINX for SS-SD		o.1	P2.3:m
A3	Behaviour as Incoming Gateway PINX for interworking with a public ISDN for SS-SD		o	i
A4	Behaviour as Outgoing Gateway PINX for interworking with a public ISDN for SS-SD		o	i

A.3.2.3.2 Procedures

Item	Question/Feature	Reference	Protocol Status	Profile Status
B1	Support of relevant ISO/IEC 11572 and ISO/IEC 11582 procedures at the Client User PINX	6.2.1	A1:m	A1:m
B2	Support of relevant ISO/IEC 11572 and ISO/IEC 11582 procedures at the Server User PINX	6.2.2	A2:m	A2:m
B3	Procedures at the Client User PINX for invocation and operation	6.5.1	A1:m	A1:m
B4	Procedures at the Server User PINX for invocation and operation	6.5.2	A2:m	A2:m
B7	Procedures at an Incoming Gateway PINX for interworking with a public ISDN for invocation and operation of SS-SD	6.6.1	A3:m	i
B8	Procedures at an Outgoing Gateway PINX for interworking with a public ISDN for invocation and operation of SS-SD	6.6.2	A4:m	i

--`,,`-`-`,,`,,`,`,,`---

© ISO/IEC 2004 All rights reserved

Copyright International Organization for Standardization
Reproduced by IHS under license with ISO
No reproduction or networking permitted without license from IHS
Not for Resale

A.3.2.3.3 Coding

Item	Question/Feature	Reference	Protocol Status	Profile Status
C1	Sending of display invoke APDU from the Server User PINX	6.3.1	A2:m	A2:m
C2	Receipt of display invoke APDU at the Client User PINX and sending of display return error APDU in case of an error indication	6.3.1	A1:m	A1:m
C3	Sending of keypad invoke APDU from the Client User PINX	6.3.1	A1:m	A1:m
C4	Receipt of keypad invoke APDU at the Server User PINX	6.3.1	A2:m	A2:m

A.3.2.4 Supplementary Service Call Diversion

As specified in A.3.1.3.

A.3.2.5 Supplementary Service Call Transfer

As specified in A.3.1.4.

A.3.2.6 Supplementary Service Single-Step Call Transfer

Item numbers and references refer to Annex A of ISO/IEC 19460.

A.3.2.6.1 General

Item	Question/Feature	Reference	Protocol Status	Profile Status
A1	Behaviour as a Transferring PINX		o.1	P2.M:m
A2	Behaviour as a Rerouting PINX		o.1	i
A3	Behaviour as a Transferred PINX		o.1	P2.S:m
A4	Behaviour as a Transferred-To PINX		o.1	P2.M:m
A5	Behaviour as Gateway PINX to a public ISDN for SS-SSCT		o	i
A6	Behaviour as Gateway PINX to a non-ISDN for SS-SSCT		o	i

Copyright International Organization for Standardization
Reproduced by IHS under license with ISO
No reproduction or networking permitted without license from IHS
Not for Resale
© ISO/IEC 2004 – All rights reserved

A.3.2.6.2 Procedures

Item	Question/Feature	Reference	Protocol Status	Profile Status
B1	Support of relevant ISO/IEC 11572 and ISO/IEC 11582 procedures	6.2	m	m
B2	Signalling procedures at a Transferring PINX	6.5.1	A1:m	A1:m
B3	Signalling procedures at a Rerouting PINX	6.5.2	A2:m	i
B4	Signalling procedures at a Transferred PINX	6.5.3, 6.5.5	A3:m	A3:m
B5	Signalling procedures at a Transferred-To PINX	6.5.4, 6.5.5	A4:m	A4:m
B6	Interworking procedures to a public ISDN at a Transferred PINX	6.6.1.1	A5:o.2	i
B7	Interworking procedures to a public ISDN at a Transferred-To PINX	6.6.1.2	A5:o.2	i
B8	Interworking procedures to a non-ISDN at a Transferred PINX	6.7.1.1	A6:o.3	i
B9	Interworking procedures to a non-ISDN at a Transferred-To PINX	6.7.1.2	A6:o.3	i
B10	Transfer occurs on alerting new call	6.5.1.1	A1:o.4	A1:o.4
B11	Transfer occurs on active new call	6.5.1.1	A1:o.4	A1:o.4

© ISO/IEC 2004 All rights reserved

Copyright International Organization for Standardization
Reproduced by IHS under license with ISO
No reproduction or networking permitted without license from IHS
Not for Resale

A.3.2.6.3 Coding

Item	Question/Feature	Reference	Protocol Status	Profile Status
C1	Sending of ssctInitiate invoke APDU and receipt of return result and return error APDUs	6.3	A1:m	A1:m
C2	Receipt of ssctInitiate invoke APDU and sending of return result and return error APDUs	6.3	A2:m	i
C3	Sending of ssctSetup invoke APDU	6.3	A2:m	A2:m
C4	Receipt of ssctSetup invoke APDU	6.3	A4:m	A4:m
C5	Sending of ssctPostDial invoke APDU	6.3	A2:o	i
C6	Receipt of ssctPostDial invoke APDU	6.3	A3:m	A3:m
C7	Sending of ssctDigitInfo invoke APDU	6.3	A3:m	A3:m
C8	Receipt of ssctDigitInfo invoke APDU	6.3	A2:m	i
C9	Sending of callTransferComplete invoke APDU	6.3	A2:m	i
C10	Receipt of callTransferComplete invoke APDU	6.3	A3:m	A3:m
C11	Sending of callTransferActive invoke APDU	6.3	A2:m	i
C12	Receipt of callTransferActive invoke APDU	6.3	A3:m	A3:m
C13	Sending of callTransferUpdate invoke APDU	6.3	c.1	o
C14	Receipt of callTransferUpdate invoke APDU	6.3	c.2	m
C15	Sending of subaddressTransfer invoke APDU	6.3	c.1	o
C16	Receipt of subaddressTransfer invoke APDU	6.3	c.2	m

c.1: If (A3 or A4) then optional, else N/A
c.2: If (A3 or A4) then mandatory, else N/A

A.3.2.6.4 Timers

Item	Question/Feature	Reference	Protocol Status	Profile Status
D1	Timer T1	6.9.1	A1:m	A1:m
D2	Timer T2	6.9.2	A2:o	i
D3	Timer T3	6.9.3	A2:m	i

© ISO/IEC 2004 – All rights reserved
Copyright International Organization for Standardization
Reproduced by IHS under license with ISO
No reproduction or networking permitted without license from IHS
Not for Resale

A.3.3 Tables for Profile 3

Item	Question/Feature	Reference	Profile Status
P3.M	Behaviour as Message Centre PINX according to MCA-Profile-3	7.3	o.1
P3.S	Behaviour as Served User PINX according to MCA-Profile-3	7.3	o.1

A.3.3.1 Support of Supplementary Services

Item	Question/Feature	Reference	Profile Status
P3.1	Support of SS-MWI at Message Centre PINX	ISO/IEC 15506	i (NOTE)
P3.2	Support of SS-MWI at Served User PINX	ISO/IEC 15506	i (NOTE)
P3.3	Support of SS-MCM at Message Centre PINX	ISO/IEC 20117	P3.M:m
P3.4	Support of SS-MCM at Served User PINX	ISO/IEC 20117	P3.S:m
P3.5	Support of SS-MID at Message Centre PINX	ISO/IEC 20117	P3.M:m
P3.6	Support of SS-MID at Served User PINX	ISO/IEC 20117	P3.S:o
P3.7	Support of SS-SD at Message Centre PINX	ISO/IEC 21408	P3.M:m
P3.8	Support of SS-SD at Served User PINX	ISO/IEC 21408	P3.S:m
P3.9	Support of SS-DIV at Message Centre PINX	ISO/IEC 13873	P3.M:m
P3.10	Support of SS-DIV at Served User PINX	ISO/IEC 13873	P3.S:m
P3.11	Support of SS-SSCT at Message Centre PINX	ISO/IEC 19460	m
P3.12	Support of SS-SSCT at Served User PINX	ISO/IEC 19460	m
P3.13	Support of SS-CT at Message Centre PINX	ISO/IEC 13869	m
P3.14	Support of SS-CT at Served User PINX	ISO/IEC 13869	m

NOTE MWI is an inherent part of MCM.

--`,,`-`-`,,`,,`,`,,`---

© ISO/IEC 2004 All rights reserved

Copyright International Organization for Standardization
Reproduced by IHS under license with ISO
No reproduction or networking permitted without license from IHS
Not for Resale

A.3.3.2 Supplementary Service Simple Dialog

As specified in A.3.2.3.

A.3.3.3 Supplementary Service Message Centre Monitoring

Item numbers and references refer to Annex A.3 of ISO/IEC 20117.

A.3.3.3.1 General

Item	Question/feature	Reference	Protocol Status	Profile Status
A1	Behaviour as a Message Centre PINX for SS-MCM		o.1	P3.M:m
A2	Behaviour as a Served User PINX for SS-MCM		o.1	P3.S:m

A.3.3.3.2 Procedures

Item	Question/feature	Reference	Protocol Status	Profile Status
B1	Support of relevant ISO/IEC 11582 procedures at the Message Centre PINX	6.2.1	A1:m	A1:m
B2	Support of relevant ISO/IEC 11582 procedures at the Served User PINX	6.2.2	A2:m	A2:m
B3	Procedures at the Message Centre PINX for activation and deactivation of monitoring messages for specific Message Types	6.5.1	A1:o	A1:o
B4	Procedures at the Message Centre PINX for interrogation of current monitoring configuration	6.5.1	A1:o	A1:o
B5	Procedures at the Message Centre PINX for the arrival of new messages	6.5.1	A1:m	A1:m
B6	Procedures at the Message Centre PINX for indicating no New Messages of a specific Message Type are available	6.5.1	A1:m	A1:m
B7	Procedures at the Message Centre PINX for an update of Message Centre information	6.5.1	A1:m	A1:m
B8	Procedures at the Message Centre PINX for an update request of Message Centre information	6.5.1	A1:m	A1:m
B9	Procedures at the Message Centre PINX for a mailbox-full indication	6.5.1	A1:o	A1:o

© ISO/IEC 2004 – All rights reserved
Copyright International Organization for Standardization
Reproduced by IHS under license with ISO
No reproduction or networking permitted without license from IHS
Not for Resale

Item	Question/feature	Reference	Protocol Status	Profile Status
B10	Procedures at the Served User PINX for activation and deactivation of monitoring messages for specific Message Types	6.5.2	A2:o	A2:o
B11	Procedures at the Served User PINX for interrogation of current monitoring configuration	6.5.2	A2:o	A2:o
B12	Procedures at the Served User PINX for the arrival of new messages	6.5.2	A2:m	A2:m
B13	Procedures at the Served User PINX for indicating no New Messages of a specific Message Type are available	6.5.2	A2:m	A2:m
B14	Procedures at the Served User PINX for an update of Message Centre information	6.5.2	A2:m	A2:m
B15	Procedures at the Served User PINX for an update request of Message Centre information	6.5.2	A2:m	A2:m
B16	Procedures at the Served User PINX for a mailbox-full indication	6.5.2	A2:o	A2:o

A.3.3.3.3 Coding

Item	Question/feature	Reference	Protocol Status	Profile Status
C1	sending of mCMNewMessage invoke APDU and receiving of mCMNewMessage return result or return error APDU	6.3.1	A1:m	A1:m
C2	receipt of mCMNewMessage invoke APDU and sending of mCMNewMessage return result or return error APDU	6.3.1	A2:m	A2:m
C3	sending of mCMNoNewMessage invoke APDU and receiving of mCMNoNewMessage return result or return error APDU	6.3.1	A1:m	A1:m
C4	receipt of mCMNoNewMessage invoke APDU and sending of mCMNoNewMessage return result or return error APDU	6.3.1	A2:m	A2:m
C5	sending of mCMUpdate invoke APDU and receiving of mCMUpdate return result or return error APDU	6.3.1	A1:m	A1:m
C6	receipt of mCMUpdate invoke APDU and sending of mCMUpdate return result or return error APDU	6.3.1	A2:m	A2:m
C7	receipt of mCMUpdateReq invoke APDU and sending of mCMUpdateReq return result or return error APDU	6.3.1	A1:m	A1:m

© ISO/IEC 2004 All rights reserved

Copyright International Organization for Standardization
Reproduced by IHS under license with ISO
No reproduction or networking permitted without license from IHS
Not for Resale

Item	Question/feature	Reference	Protocol Status	Profile Status
C8	sending of mCMUpdateReq invoke APDU and receiving of mCMUpdateReq return result or return error APDU	6.3.1	A2:m	A2:m
C9	receipt of mCMService invoke APDU and sending of mCMService return result or return error APDU	6.3.1	B3:m	B3:m
C10	sending of mCMService invoke APDU and receiving of mCMService return result or return error APDU	6.3.1	B9:m	B9:m
C11	receipt of mCMInterrogate invoke APDU and sending of mCMInterrogate return result or return error APDU	6.3.1	B4:m	B4:m
C12	sending of mCMInterrogate invoke APDU and receiving of mCMInterrogate return result or return error APDU	6.3.1	B10:m	B10:m
C13	sending of mCMailboxFull invoke APDU	6.3.1	B8:m	B8:m
C14	receipt of mCMailboxFull invoke APDU	6.3.1	B14:m	B14:m

A.3.3.3.4 Timers

Item	Question/feature	Reference	Protocol Status	Profile Status
D1	Support of timer T1	6.9.1	A1:m	A1:m
D2	Support of timer T2	6.9.2	A2:m	A2:m
D3	Support of timer T3	6.9.3	A2:m	A2:m

A.3.3.4 Supplementary Service Message Centre Identification

Item numbers and references refer to Annex A.4 of ISO/IEC 20117.

A.3.3.4.1 General

Item	Question/feature	Reference	Protocol Status	Profile Status
A1	Behaviour as Message Centre PINX for SS-MID		o.1	P3.M:m
A2	Behaviour as Served User PINX for SS-MID		o.1	P3.S:o

Copyright International Organization for Standardization
Reproduced by IHS under license with ISO
No reproduction or networking permitted without license from IHS
Not for Resale
© ISO/IEC 2004 – All rights reserved

A.3.3.4.2 Procedures

Item	Question/feature	Reference	Protocol Status	Profile Status
B1	Support of relevant ISO/IEC 11582 procedures at the Message Centre PINX	7.2.1	A1:m	A1:m
B2	Support of relevant ISO/IEC 11582 procedures at the Served User PINX	7.2.2	A2:m	A2:m
B3	Procedures at the Message Centre PINX for identification of Served User mailboxes	7.5.1	A1:o.2	A1:o.2
B4	Procedures at the Message Centre PINX for authentication of a Served User at his/her mailbox	7.5.1	A1:o.2	A1:o.2
B5	Procedures at the Served User PINX for identification of Served User mailboxes	7.5.2	A2:o.3	A2:o.3
B6	Procedures at the Served User PINX for authentication of a Served User at his/her mailbox	7.5.2	A2:o.3	A2:o.3

A.3.3.4.3 Coding

Item	Question/feature	Reference	Protocol Status	Profile Status
C1	sending of mIDMailboxID invoke APDU and receiving of mIDMailboxID return result or return error APDU	7.3.1	B3:m	B3:m
C2	receipt of mIDMailboxID invoke APDU and sending of mIDMailboxID return result or return error APDU	7.3.1	B5:m	B5:m
C3	receipt of mIDMailboxAuth invoke APDU and sending of mIDMailboxAuth return result or return error APDU	7.3.1	B4:m	B4:m
C4	sending of mIDMailboxAuth invoke APDU and receiving of mIDMailboxAuth return result or return error APDU	7.3.1	B6:m	B6:m

A.3.3.4.4 Timers

Item	Question/feature	Reference	Protocol Status	Profile Status
D1	Support of timer T1	7.9.1	B3:m	B3:m
D2	Support of timer T2	7.9.2	B6:m	B6:m

--`,,`-`-`,,`,,`,`,,`---
© ISO/IEC 2004 All rights reserved
Copyright International Organization for Standardization
Reproduced by IHS under license with ISO
No reproduction or networking permitted without license from IHS
Not for Resale

A.3.3.5 Supplementary Service Call Diversion

As specified in A.3.1.3.

A.3.3.6 Supplementary Service Call Transfer

As specified in A.3.1.4.

A.3.3.7 Supplementary Service Single-Step Call Transfer

As specified in A.3.2.6.

A.3.4 Tables for Profile 4

Item	Question/Feature	Reference	Profile Status
P4.M	Behaviour as Message Centre PINX according to MCA-Profile-4	7.4	o.1
P4.S	Behaviour as Served User PINX according to MCA-Profile-4	7.4	o.1

A.3.4.1 Support of Supplementary Services

Item	Question/Feature	Reference	Profile Status
P4.1	Support of SS-MWI at Message Centre PINX	ISO/IEC 15506	i (NOTE)
P4.2	Support of SS-MWI at Served User PINX	ISO/IEC 15506	i (NOTE)
P4.3	Support of SS-MCM at Message Centre PINX	ISO/IEC 20117	P4.M:m
P4.4	Support of SS-MCM at Served User PINX	ISO/IEC 20117	P4.S:m
P4.5	Support of SS-MID at Message Centre PINX	ISO/IEC 20117	P4.M:m
P4.6	Support of SS-MID at Served User PINX	ISO/IEC 20117	P4.S:o
P4.7	Support of SS-SD at Message Centre PINX	ISO/IEC 21408	P4.M:m
P4.8	Support of SS-SD at Served User PINX	ISO/IEC 21408	P4.S:m
P4.9	Support of SS-MCR at Message Centre PINX	ISO/IEC 20114	P4.M:m
P4.10	Support of SS-MCR at Served User PINX	ISO/IEC 20114	P4.S:m

© ISO/IEC 2004 – All rights reserved
Copyright International Organization for Standardization
Reproduced by IHS under license with ISO
No reproduction or networking permitted without license from IHS
Not for Resale

Item	Question/Feature	Reference	Profile Status
P4.11	Support of SS-DIV at Message Centre PINX	ISO/IEC 13873	P4.M:m
P4.12	Support of SS-DIV at Served User PINX	ISO/IEC 13873	P4.S:m
P4.13	Support of SS-CT at Message Centre PINX	ISO/IEC 13869	P4.M:m
P4.14	Support of SS-CT at Served User PINX	ISO/IEC 13869	P4.S:m
P4.15	Support of SS-SSCT at Served User PINX	ISO/IEC 19460	P4.S:m
P4.16	Support of SS-SSCT at Message Centre PINX	ISO/IEC 19460	P4.M:m

NOTE MWI is an inherent part of MCM.

A.3.4.2 Supplementary Service Simple Dialog

As specified in A.3.2.3.

A.3.4.3 Supplementary Service Message Centre Monitoring

As specified in A.3.3.3.

A.3.4.4 Supplementary Service Message Centre Identification

As specified in A.3.3.4.

A.3.4.5 Supplementary Service Make Call Request

Item number and references refer to Annex A of ISO/IEC 20114.

A.3.4.5.1 General

Item	Question/Feature	Reference	Protocol Status	Profile Status
A1	Behaviour as Requesting PINX for SS-MCR		o.1	P4.M:m
A2	Behaviour as Co-operating PINX for SS-MCR		o.1	P4.S:m
A3	Behaviour as Destination PINX for SS-MCR		o.1	P4.M:m

© ISO/IEC 2004 All rights reserved
Copyright International Organization for Standardization
Reproduced by IHS under license with ISO
No reproduction or networking permitted without license from IHS
Not for Resale

A.3.4.5.2 Procedures

Item	Question/Feature	Reference	Protocol Status	Profile Status
B1	Support of relevant ISO/IEC 11572 and ISO/IEC 11582 procedures at the Requesting PINX	6.2.1	A1:m	A1:m
B2	Support of relevant ISO/IEC 11572 and ISO/IEC 11582 procedures at the Co-operating PINX	6.2.2	A2:m	A2:m
B3	Support of relevant ISO/IEC 11572 and ISO/IEC 11582 procedures at the Destination PINX	6.2.3	A3:m	A3:m
B4	Procedures at the Requesting PINX for invocation and operation	6.5.1	A1:m	A1:m
B5	Procedures at the Co-operating PINX for invocation and operation	6.5.2	A2:m	A2:m
B6	Procedures at the Destination PINX for invocation and operation	6.5.3	A3:m	A3:m

A.3.4.5.3 Coding

Item	Question/Feature	Reference	Protocol Status	Profile Status
C1	Sending of mCRequest invoke APDU to the Co-operating PINX	6.5.1	A1:m	A1:m
C2	Receipt of mCRequest return result APDU or mCRequest return error from the Co-operating PINX	6.5.1	A1:m	A1:m
C3	Receipt of mCRequest invoke APDU from the Requesting PINX	6.5.2	A2:m	A2:m
C4	Sending of mCRequest return result APDU or mCRequest return error APDU in case of an error indication	6.5.2	A2:m	A2:m
C5	Sending of mCAlerting invoke APDU to the Requesting PINX	6.5.2	A2:m	A2:m
C6	Receipt of mCAlerting invoke APDU from the Co-operating PINX	6.5.1	A1:m	A1:m
C7	Sending of mCInform invoke APDU to the Destination PINX	6.5.2	A2:m	A2:m
C8	Receipt of mCInform return error APDU from the Destination PINX	6.5.2	A2:m	A2:m
C9	Receipt of mCInform invoke APDU from the Co-operating PINX	6.5.3	A3:m	A3:m
C10	Sending of mCInform return error APDU to the Co-operating PINX	6.5.3	A3:m	A3:m

© ISO/IEC 2004 – All rights reserved
Copyright International Organization for Standardization
Reproduced by IHS under license with ISO
No reproduction or networking permitted without license from IHS
Not for Resale

A.3.4.5.4 Timers

Item	Question/Feature	Reference	Protocol Status	Profile Status
D1	Support of timer T1	6.9.1	A1:m	A1:m

A.3.4.6 Supplementary Service Call Diversion

As specified in A.3.1.3.

A.3.4.7 Supplementary Service Call Transfer

As specified in A.3.1.4.

A.3.4.8 Supplementary Service Single-Step Call Transfer

As specified in A.3.2.6.

© ISO/IEC 2004 All rights reserved

Copyright International Organization for Standardization
Reproduced by IHS under license with ISO
No reproduction or networking permitted without license from IHS
Not for Resale

Annex B
(normative)

Profile specific ICS proforma

B.1 General

The layout and content of this Annex is guided by ISO/IEC 9646-7.

The supplier of a profile implementation that is claimed to conform to this International Standard shall complete the Profile specific Implementation Conformance Statement (ICS) proforma contained in this Annex.

NOTE The supplier is also required to complete a copy of the PICS proforma provided in each of the protocol standards referred to by this International Standard.

A completed Profile specific ICS proforma is the ICS for the implementation in question. The ICS is a statement of which capabilities and options of the profile have been implemented. The ICS can have a number of uses, including use:

— By the profile implementer, as a check list to reduce the risk of failure to conform to the standard through oversight;

— By the supplier and acquirer (or potential acquirer) of the implementation, as a detailed indication of the capabilities of the implementation, stated relative to the common basis for understanding provided by the standard ICS proforma;

— By the user (or potential user) of the implementation, as a basis for initially checking the possibility of interworking with another implementation (note that, while interworking cannot be guaranteed, failure to interwork can often be predicted from incompatible ICS);

— By a protocol tester, as the basis for selecting appropriate test suites against which to assess the claim for conformance of the implementation.

B.2 Instruction for completing the ICS proforma

B.2.1 General structure of the ICS proforma

The ICS proforma is a fixed format questionnaire divided into subclauses each containing a group of individual items. Each item is identified by an item number, the name of the item (question to be answered), and the reference(s) to either the base standard, or a specific clause in a base standard, or specifying the item in the main body of this International Standard (if no base standard is listed in the reference column).

The "Status" column indicates whether an item is applicable and if so whether support is mandatory or optional. The following terms are used:

m mandatory (the capability is required for conformance to the profile);

o optional (the capability is not required for conformance to the profile but if the capability is implemented it is required to conform to the profile specification);

o.<n> optional, but support of at least one of the group of options labelled by the same numeral <n> is required;

© ISO/IEC 2004 – All rights reserved
Copyright International Organization for Standardization
Reproduced by IHS under license with ISO
No reproduction or networking permitted without license from IHS
Not for Resale

<item>:m simple-conditional requirement, the capability being mandatory if item number <item> is supported, otherwise not applicable;

<item>:o simple-conditional requirement, the capability being optional if item number <item> is supported, otherwise not applicable;

x prohibited;

c.<cond> conditional requirement, depending on support for the item listed in condition <cond>.

Answers to the questionnaire items are to be provided in the "Support" column, by simply marking an answer to indicate a restricted choice (Yes or No), or in the "Not Applicable" column (N/A).

B.2.2 Additional Information

Items of Additional information allow a supplier to provide further information intended to assist the interpretation of the ICS. It is not intended or expected that a large quantity will be supplied, and an ICS can be considered complete without any such information. Examples might be an outline of the ways in which a (single) implementation can be set up to operate in a variety of environments and configurations.

References to items of Additional information may be entered next to any answer in the questionnaire, and may be included in items of Exception Information.

B.2.3 Exception Information

It may occasionally happen that a supplier will wish to answer an item with mandatory or prohibited status (after any conditions have been applied) in a way that conflicts with the indicated requirements, No pre-printed answer will be found in the Support column for this. Instead, the supplier is required to write into the support column an x.<i> reference to an item of Exception Information, and to provide the appropriate rationale in the Exception item itself.

An implementation for which a Exception item is required in this way does not conform to this International Standard. A possible reason for the situation described above is that a defect in the standard has been reported, a correction for which is expected to change the requirement not met by the implementation.

© ISO/IEC 2004 All rights reserved

Copyright International Organization for Standardization
Reproduced by IHS under license with ISO
No reproduction or networking permitted without license from IHS
Not for Resale

B.3 ICS proforma for Profile 1

B.3.1 Implementation Identification

Supplier	
Contact point for queries about the ICS	
Implementation Name(s) and Version(s) (NOTE)	
Other information necessary for full identification, e.g. name(s) and version(s) for machines and/or operating systems; system name(s)	
Have any exception items been required?	No[ ] Yes[ ] (The answer Yes means that the implementation does not conform to this International Standard)
Date of Statement	

NOTE The terms "Name" and "Version" should be interpreted appropriately to correspond with a supplier's terminology (e.g., Type, Series, Model).

B.3.2 General

Item	Question/Feature	Reference	Status	N/A	Support
P1.A1	Support of Message Centre Access at Message Centre PINX according to MCA-Profile-1		o.1		Yes [ ] No[ ]
P1.A2	Support of Message Centre Access at Served User PINX according to MCA-Profile-1		o.1		Yes [ ] No[ ]

© ISO/IEC 2004 – All rights reserved
Copyright International Organization for Standardization
Reproduced by IHS under license with ISO
No reproduction or networking permitted without license from IHS
Not for Resale

B.3.3 Message Deposit

Item	Question/Feature	Reference	Status	N/A	Support
P1.B1	Direct Message Deposit using Called Party Number IE	7.1.1	P1.A1:o	[ ]	Yes [ ] No[ ]
P1.B2	Direct Message Deposit using DTMF and announcements	7.1.1	P1.A1:m	[ ]	Yes [ ]
P1.B3	Message Deposit after Diversion	7.1.1	P1.A1:m	[ ]	Yes [ ]
P1.B4	Message Deposit after Call Transfer using Called Party Number IE	7.1.1	o		Yes [ ] No[ ]
P1.B5	Message Deposit after Call Transfer using DTMF and announcements	7.1.1	P1.A1:m	[ ]	Yes [ ]
P1.B6	Invocation of Message Waiting Indication after Message Deposit	7.1.1	m		m:Yes [ ]

B.3.4 Message Centre Monitoring

Item	Question/Feature	Reference	Status	N/A	Support
P1.C1	Message Centre Monitoring using Message Waiting Indication	7.1.2	m		m:Yes [ ]

B.3.5 Message Browsing

Item	Question/Feature	Reference	Status	N/A	Support
P1.D1	User Authentication using DTMF and announcements	7.1.3	c.1	[ ]	Yes [ ] No[ ]
P1.D2	Message Browsing using DTMF and announcements	7.1.3	m		m:Yes [ ]

c.1: If P1.A1 then m, else o

B.3.6 Message Retrieval

Item	Question/Feature	Reference	Status	N/A	Support
P1.E1	Message Retrieval using DTMF and announcements	7.1.4	m		m:Yes [ ]

© ISO/IEC 2004 All rights reserved

Copyright International Organization for Standardization
Reproduced by IHS under license with ISO
No reproduction or networking permitted without license from IHS
Not for Resale

B.3.7 Message Centre Transfer

Item	Question/Feature	Reference	Status	N/A	Support
P1.F1	Message Centre Transfer using Call Transfer initiated using DTMF and announcements	7.1.5	m		m:Yes [ ]

B.4 ICS proforma for Profile 2

B.4.1 Implementation Identification

Supplier	
Contact point for queries about the ICS	
Implementation Name(s) and Version(s) (NOTE)	
Other information necessary for full identification, e.g. name(s) and version(s) for machines and/or operating systems; system name(s)	
Have any exception items been required?	No[ ] Yes[ ] (The answer Yes means that the implementation does not conform to this International Standard)
Date of Statement	

NOTE The terms "Name" and "Version" should be interpreted appropriately to correspond with a supplier's terminology (e.g., Type, Series, Model).

B.4.2 General

Item	Question/Feature	Reference	Status	N/A	Support
P2.A1	Support of Message Centre Access at Message Centre PINX according to MCA-Profile-2		o.1		Yes [ ] No[ ]
P2.A2	Support of Message Centre Access at Served User PINX according to MCA-Profile-2		o.1		Yes [ ] No[ ]

© ISO/IEC 2004 – All rights reserved
Copyright International Organization for Standardization
Reproduced by IHS under license with ISO
No reproduction or networking permitted without license from IHS
Not for Resale

B.4.3 Message Deposit

Item	Question/Feature	Reference	Status	N/A	Support
P2.B1	Direct Message Deposit using Called Party Number IE	7.2.1	P2.A1:o	[ ]	Yes [ ] No[ ]
P2.B2	Direct Message Deposit using Simple Dialog	7.2.1	P2.A1:m	[ ]	m:Yes [ ]
P2.B3	Direct Message Deposit using DTMF and announcements	7.2.1	P2.A1:m	[ ]	m:Yes [ ]
P2.B4	Message Deposit after Diversion	7.2.1	m		m:Yes [ ]
P2.B5	Message Deposit after Call Transfer using Called Party Number IE	7.2.1	P2.A1:o	[ ]	Yes [ ] No[ ]
P2.B6	Message Deposit after Call Transfer using Simple Dialog	7.2.1	P2.A1:m	[ ]	m:Yes [ ]
P2.B7	Fall back to Message Deposit after Call Transfer using DTMF and announcements	7.2.1	P2.A1:m	[ ]	m:Yes [ ]
P2.B8	Message Deposit after Single Step Call Transfer	7.2.1	P2.A1:m	[ ]	m:Yes [ ]
P2.B9	Invocation of Message Waiting Indication after Message Deposit	7.2.1	m		m:Yes [ ]

B.4.4 Message Centre Monitoring

Item	Question/Feature	Reference	Status	N/A	Support
P2.C1	Message Centre Monitoring using Message Waiting Indication	7.2.2	m		m:Yes [ ]

B.4.5 Message Browsing

Item	Question/Feature	Reference	Status	N/A	Support
P2.D1	User Authentication using Simple Dialog	7.2.3	c.1	[ ]	Yes [ ] No[ ]
P2.D2	Fall back to User Authentication using DTMF and announcements	7.2.3	P2.D1:m	[ ]	m:Yes [ ]
P2.D3	Message Browsing using Simple Dialog	7.2.3	m		m:Yes [ ]
P2.D4	Fall back to Message Browsing using DTMF and announcements	7.2.3	m		m:Yes [ ]

c.1: If P2.A1 then m, else o

© ISO/IEC 2004 All rights reserved

Copyright International Organization for Standardization
Reproduced by IHS under license with ISO
No reproduction or networking permitted without license from IHS
Not for Resale

B.4.6 Message Retrieval

Item	Question/Feature	Reference	Status	N/A	Support
P2.E1	Message Retrieval using Simple Dialog	7.2.4	m		m:Yes [ ]
P2.E2	Fall back to Message Retrieval using DTMF and announcements	7.2.4	m		m:Yes [ ]

B.4.7 Message Centre Transfer

Item	Question/Feature	Reference	Status	N/A	Support
P2.F1	Message Centre Transfer using Single Step Call Transfer initiated using Simple Dialog	7.2.5	m		m:Yes [ ]
P2.F2	Fall back to Message Centre Transfer using Single Step Call Transfer initiated using DTMF and announcements	7.2.5	m		m:Yes [ ]
P2.F3	Message Centre Transfer using Call Transfer initiated using Simple Dialog	7.2.5	m		m:Yes [ ]
P2.F4	Fall back to Message Centre Transfer using Call Transfer initiated using DTMF and announcements	7.2.5	m		m:Yes [ ]

B.5 ICS proforma for Profile 3

B.5.1 Implementation Identification

Supplier	
Contact point for queries about the ICS	
Implementation Name(s) and Version(s) (NOTE)	
Other information necessary for full identification, e.g. name(s) and version(s) for machines and/or operating systems; system name(s)	
Have any exception items been required?	No[ ] Yes[ ] (The answer Yes means that the implementation does not conform to this International Standard)
Date of Statement	

NOTE The terms "Name" and "Version" should be interpreted appropriately to correspond with a supplier's terminology (e.g., Type, Series, Model).

--`,,`-`-`,,`,,`,`,,`---

© ISO/IEC 2004 – All rights reserved
Copyright International Organization for Standardization
Reproduced by IHS under license with ISO
No reproduction or networking permitted without license from IHS
Not for Resale

B.5.2 General

Item	Question/Feature	Reference	Status	N/A	Support
P3.A1	Support of Message Centre Access at Message Centre PINX according to MCA-Profile-3		o.1		Yes [ ] No[ ]
P3.A2	Support of Message Centre Access at Served User PINX according to MCA-Profile-3		o.1		Yes [ ] No[ ]

B.5.3 Message Deposit

Item	Question/Feature	Reference	Status	N/A	Support
P3.B1	Direct Message Deposit using Called Party Number IE	7.3.1	P3.A1:o	[ ]	Yes [ ] No[ ]
P3.B2	Direct Message Deposit using Simple Dialog	7.3.1	P3.A1:m	[ ]	m:Yes [ ]
P3.B3	Fall back to Direct Message Deposit using DTMF and announcements	7.3.1	P3.A1:m	[ ]	m:Yes [ ]
P3.B4	Message Deposit after Diversion	7.3.1	m		m:Yes [ ]
P3.B5	Message Deposit after Call Transfer using Called Party Number IE	7.3.1	P3.A1:o	[ ]	Yes [ ] No[ ]
P3.B6	Message Deposit after Call Transfer using Simple Dialog	7.3.1	P3.A1:m	[ ]	m:Yes [ ]
P3.B7	Fall back to Message Deposit after Call Transfer using DTMF and announcements	7.3.1	P3.A1:m	[ ]	m:Yes [ ]
P3.B8	Message Deposit after Single Step Call Transfer	7.3.1	m		m:Yes [ ]
P3.B9	Invocation of Message Centre Monitoring after Message Deposit	7.3.1	m		m:Yes [ ]

© ISO/IEC 2004 All rights reserved
Copyright International Organization for Standardization
Reproduced by IHS under license with ISO
No reproduction or networking permitted without license from IHS
Not for Resale

B.5.4 Message Centre Monitoring

Item	Question/Feature	Reference	Status	N/A	Support
P3.C1	Message Centre Monitoring using Message Centre Monitoring	7.3.2	m		m:Yes [ ]
P3.C2	Identification of a Served User's Mailbox using Mailbox Identification	7.3.2	o		Yes [ ] No[ ]

B.5.5 Message Browsing

Item	Question/Feature	Reference	Status	N/A	Support
P3.D1	Served User Authentication using Mailbox Identification	7.3.3	c.1	[ ]	Yes [ ] No[ ]
P3.D2	Served User Authentication using Simple Dialog	7.3.3	P3.D1:m	[ ]	m:Yes [ ]
P3.D3	Fall back to User Authentication using DTMF and announcements	7.3.3	m		m:Yes [ ]
P3.D4	Message Browsing using Message Centre Monitoring	7.3.3	m		m:Yes [ ]
P3.D5	Fall back to Message Browsing using DTMF and announcements	7.3.3	m		m:Yes [ ]

c.1: If P3.A1 then m, else o

B.5.6 Message Retrieval

Item	Question/Feature	Reference	Status	N/A	Support
P3.E1	Message Retrieval using Simple Dialog	7.3.4	m		m:Yes [ ]
P3.E2	Fall back to Message Retrieval using DTMF and announcements	7.3.4	m		m:Yes [ ]

© ISO/IEC 2004 – All rights reserved
Copyright International Organization for Standardization
Reproduced by IHS under license with ISO
No reproduction or networking permitted without license from IHS
Not for Resale

B.5.7 Message Centre Transfer

Item	Question/Feature	Reference	Status	N/A	Support
P3.F1	Message Centre Transfer using Single Step Call Transfer initiated using Simple Dialog	7.3.5	m		m:Yes [ ]
P3.F2	Fall back to Message Centre Transfer using Single Step Call Transfer initiated using DTMF and announcements	7.3.5	m		m:Yes [ ]
P3.F3	Message Centre Transfer using Call Transfer initiated using Simple Dialog	7.3.5	m		m:Yes [ ]
P3.F4	Fall back to Message Centre Transfer using Call Transfer initiated using DTMF and announcements	7.3.5	m		m:Yes [ ]

B.6 ICS proforma for Profile 4

B.6.1 Implementation Identification

Supplier	
Contact point for queries about the ICS	
Implementation Name(s) and Version(s) (NOTE)	
Other information necessary for full identification, e.g. name(s) and version(s) for machines and/or operating systems; system name(s)	
Have any exception items been required?	No[ ] Yes[ ] (The answer Yes means that the implementation does not conform to this International Standard)
Date of Statement	

NOTE The terms "Name" and "Version" should be interpreted appropriately to correspond with a supplier's terminology (e.g., Type, Series, Model).

© ISO/IEC 2004 All rights reserved

Copyright International Organization for Standardization
Reproduced by IHS under license with ISO
No reproduction or networking permitted without license from IHS
Not for Resale

B.6.2 General

Item	Question/Feature	Reference	Status	N/A	Support
P4.A1	Support of Message Centre Access at Message Centre PINX according to MCA-Profile-4		o.1		Yes [ ] No[ ]
P4.A2	Support of Message Centre Access at Served User PINX according to MCA-Profile-4		o.1		Yes [ ] No[ ]

B.6.3 Message Deposit

Item	Question/Feature	Reference	Status	N/A	Support
P4.B1	Direct Message Deposit using Called Party IE	7.4.1	P4.A1:o	[ ]	Yes [ ] No[ ]
P4.B2	Direct Message Deposit using Simple Dialog	7.4.1	P4.A1:m	[ ]	m:Yes [ ]
P4.B3	Fall back to Direct Message Deposit using DTMF and announcements	7.4.1	m		m:Yes [ ]
P4.B4	Message Deposit after Diversion	7.4.1	m		m:Yes [ ]
P4.B5	Message Deposit after Call Transfer using Called Party IE	7.4.1	o		Yes [ ] No[ ]
P4.B6	Message Deposit after Call Transfer using Simple Dialog	7.4.1	m		m:Yes [ ]
P4.B7	Message Deposit after Call Transfer using DTMF and announcements	7.4.1	m		m:Yes [ ]
P4.B8	Message Deposit after Single Step Call Transfer	7.4.1	m		m:Yes [ ]
P4.B9	Invocation of Message Centre Monitoring after Message Deposit	7.4.1	m		m:Yes [ ]

B.6.4 Message Centre Monitoring

Item	Question/Feature	Reference	Status	N/A	Support
P4.C1	Monitoring of the Served User's Mailbox using Message Centre Monitoring	7.4.2	m		m:Yes [ ]

© ISO/IEC 2004 – All rights reserved
Copyright International Organization for Standardization
Reproduced by IHS under license with ISO
No reproduction or networking permitted without license from IHS
Not for Resale

B.6.5 Message Browsing

Item	Question/Feature	Reference	Status	N/A	Support
P4.D1	Served User Authentication using Mailbox Identification	7.4.3	c.1	[ ]	Yes [ ] No[ ]
P4.D2	Served User Authentication using Simple Dialog	7.4.3	c.1	[ ]	Yes [ ] No[ ]
P4.D3	Fall back to User Authentication using DTMF and announcements	7.4.3	P4.D2:m	[ ]	m:Yes [ ]
P4.D4	Message Browsing using Simple Dialog	7.4.3	m		m:Yes [ ]
P4.D5	Fall back to Message Browsing using DTMF and announcements	7.4.3	m		m:Yes [ ]

c.1: If P4.A1 then m, else o

B.6.6 Message Retrieval

Item	Question/Feature	Reference	Status	N/A	Support
P4.E1	Message Retrieval using Simple Dialog and Make Call Request	7.4.4	m		m:Yes [ ]
P4.E2	Fall back to Message Retrieval using DTMF and announcements	7.4.4	m		m:Yes [ ]

B.6.7 Message Centre Transfer

Item	Question/Feature	Reference	Status	N/A	Support
P4.F1	Message Centre Transfer using Single Step Call Transfer initiated using Simple Dialog	7.4.5	m		m:Yes [ ]
P4.F2	Message Centre Transfer using Call Transfer initiated using Simple Dialog	7.4.5	m		m:Yes [ ]
P4.F3	Message Centre Transfer using Make Call Request initiated using Simple Dialog	7.4.5	o	[ ]	Yes [ ] No[ ]
P4.F4	Fall back to Message Centre Transfer using DTMF and announcements	7.4.5	m		m:Yes [ ]

© ISO/IEC 2004 All rights reserved

Copyright International Organization for Standardization
Reproduced by IHS under license with ISO
No reproduction or networking permitted without license from IHS
Not for Resale

Annex C
(informative)

Example Message Flows

C.1 Example Message Flows for Profile 1

C.1.1 Message Deposit after Diversion

Figure C.1.1 shows the diversion of a Calling User (e.g. due to CFU) to the MWI Served User's mailbox and the transmission of a Message Waiting Indication for the MWI Served User.

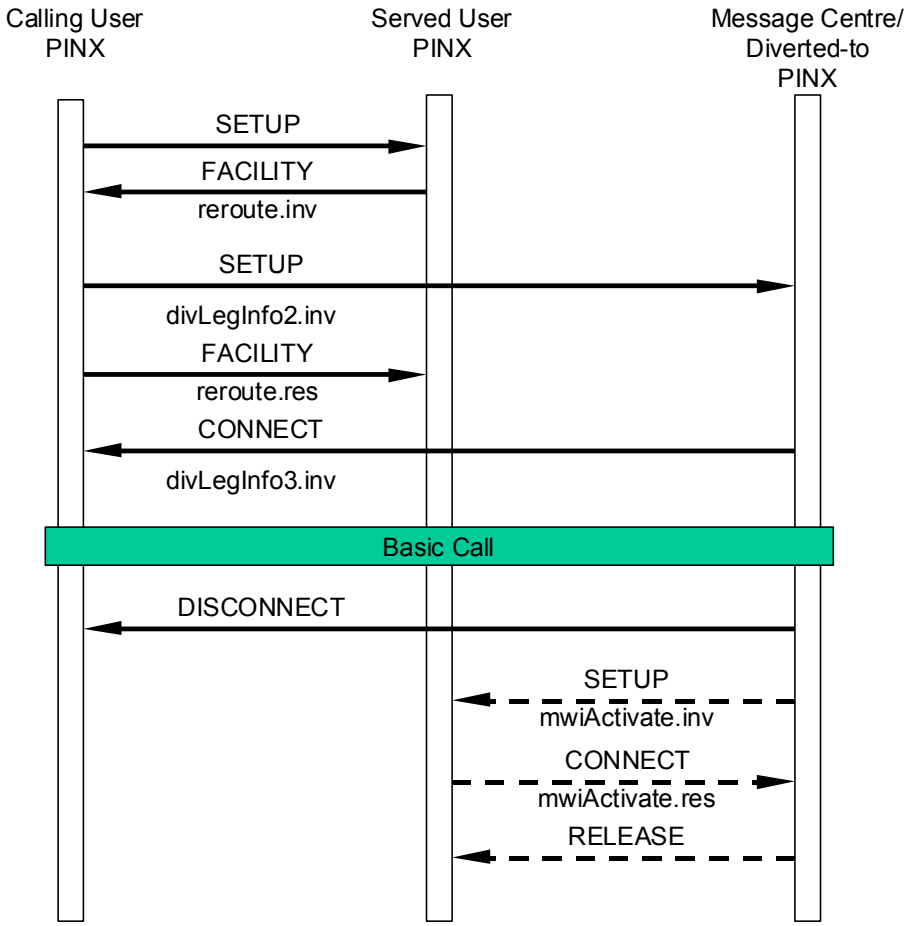

NOTE Clearing of the MWI-CISC is optional.

Figure C.1.1 — Message deposit after diversion and transmission of a Message Waiting Indication for the MWI Served User

Copyright International Organization for Standardization
Reproduced by IHS under license with ISO
No reproduction or networking permitted without license from IHS
Not for Resale
© ISO/IEC 2004 – All rights reserved

C.1.2 Message retrieval

Figure C.1.2 shows the retrieval of messages by the MWI Served User from the MWI Served User's mailbox and the clearing of the Message Waiting Indication for the MWI Served User.

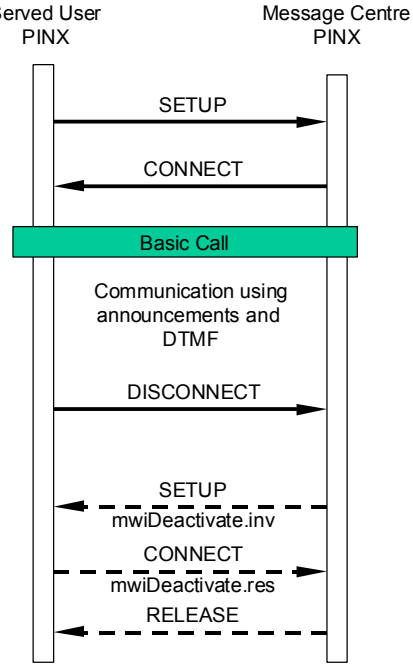

NOTE Clearing of the MWI-CISC is optional.

Figure C.1.2 — Message Retrieval and clearing of Message Waiting Indication

© ISO/IEC 2004 All rights reserved
Copyright International Organization for Standardization
Reproduced by IHS under license with ISO
No reproduction or networking permitted without license from IHS
Not for Resale

C.1.3 Message Centre Transfer

Figure C.1.3 shows the transfer of the MWI Served User to, for example, the originator of a message in the MWI Served User's mailbox.

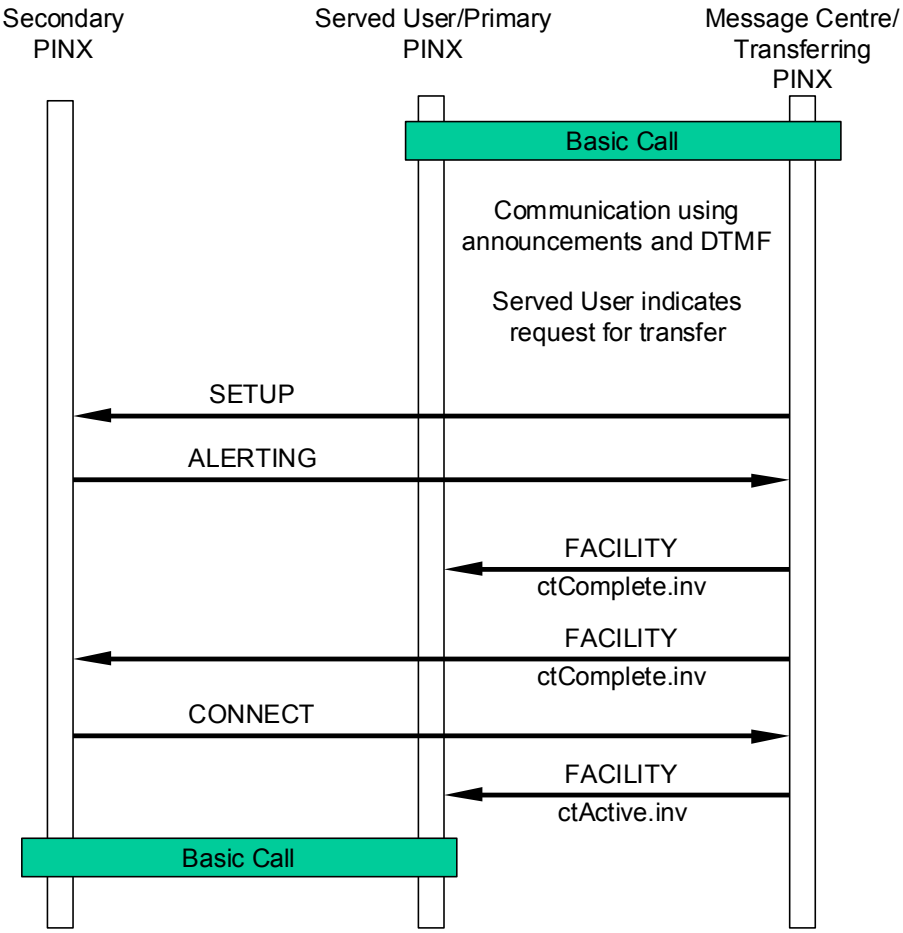

Figure C.1.3 — Call Transfer initiated by the Message Centre PINX on request of the Served User

Copyright International Organization for Standardization
Reproduced by IHS under license with ISO
No reproduction or networking permitted without license from IHS
© ISO/IEC 2004 – All rights reserved
Not for Resale

C.2 Example Message Flows for Profile 2

C.2.1 Message retrieval

Figure C.2.1 shows the retrieval of messages by the MWI Served User from the MWI Served User's mailbox and the clearing of the Message Waiting Indication for the MWI Served User. The communication between the Served User and the Message Centre is done using Simple Dialog.

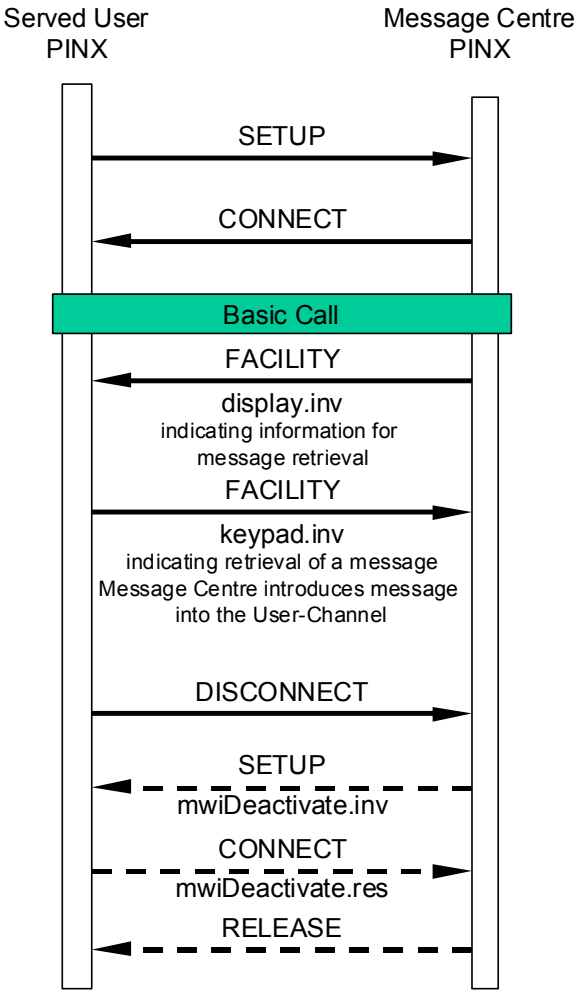

NOTE Clearing of the MWI-CISC is optional.

Figure C.2.1 — Message Retrieval and deactivation of Message Waiting Indication

--`,,`-`-`,,`,,`,`,,`---
© ISO/IEC 2004 All rights reserved
Copyright International Organization for Standardization
Reproduced by IHS under license with ISO
No reproduction or networking permitted without license from IHS
Not for Resale

C.2.2 Message Centre Single Step Transfer

Figure C.2.2 shows the transfer of the MWI Served User to, for example, the originator of a message in the MWI Served User's mailbox. The Served User initiates Single Step Call Transfer using Simple Dialog. In the example, transfer occurs on alerting of the new call.

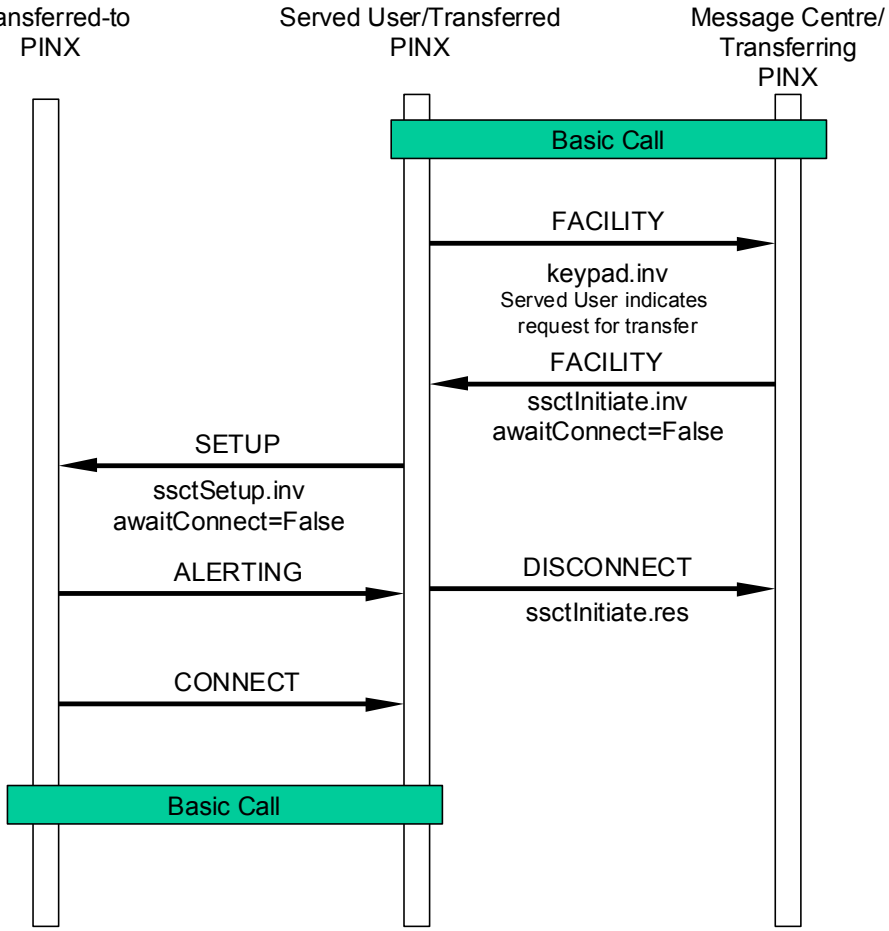

Figure C.2.2 — Single Step Call Transfer initiated by the Message Centre PINX on request of the Served User

--`,,`-`-`,,`,,`,`,,`---
© ISO/IEC 2004 – All rights reserved
Copyright International Organization for Standardization
Reproduced by IHS under license with ISO
No reproduction or networking permitted without license from IHS
Not for Resale

C.3 Example Message Flows for Profile 3

C.3.1 Message Deposit after Diversion

Figure C.3.1 shows the diversion of a Calling User (e.g. due to CFU) to the MCM Served User's mailbox and the transmission of a New Message Indication for the MCM Served User.

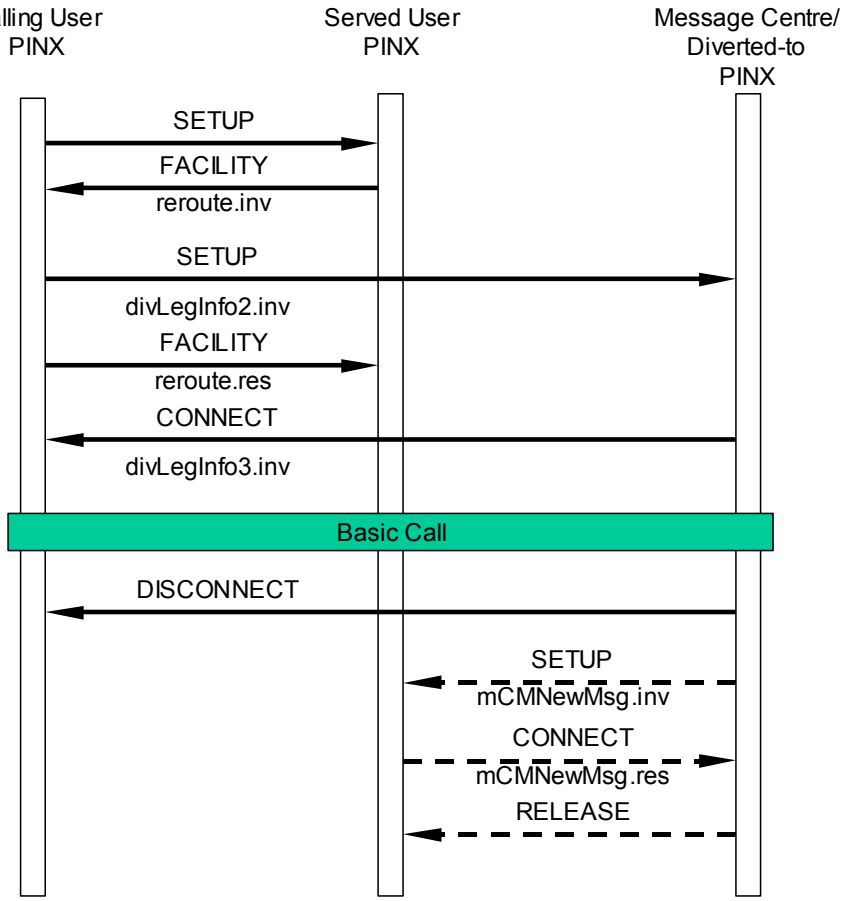

Figure C.3.1 — Message deposit after diversion and transmission of a New Message Indication for the MCM Served User

© ISO/IEC 2004 – All rights reserved
Copyright International Organization for Standardization
Reproduced by IHS under license with ISO
No reproduction or networking permitted without license from IHS
Not for Resale

C.3.2 Message Centre Monitoring

Figure C.3.2 shows how the Served User authenticates and activates Message Centre Monitoring for a particular Message Type.

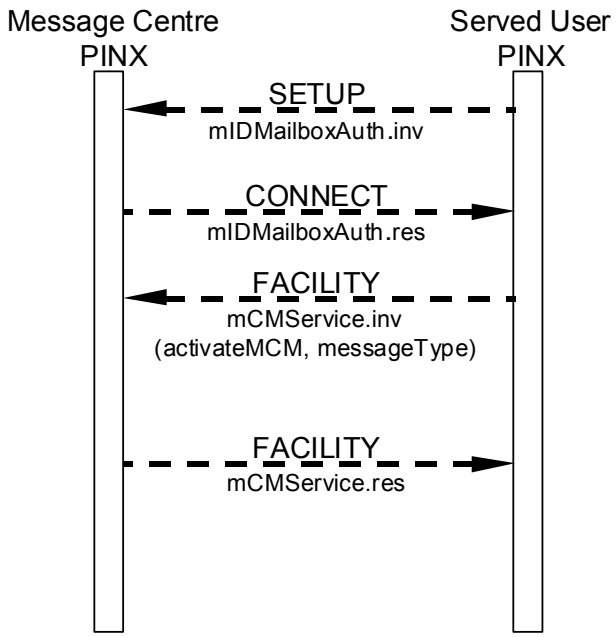

Figure C.3.2 — Activation of Message Centre Monitoring for a particular Message Type after authentication of the Served User

© ISO/IEC 2004 – All rights reserved
Copyright International Organization for Standardization
Reproduced by IHS under license with ISO
No reproduction or networking permitted without license from IHS
Not for Resale

C.3.3 Message Centre Browsing

Figure C.3.3 shows an example message flow where the Served User owns several mailboxes at a Message Centre. The mailboxes are identified using Mailbox Identification before performing the update procedures for the various mailboxes according to Message Centre Monitoring.

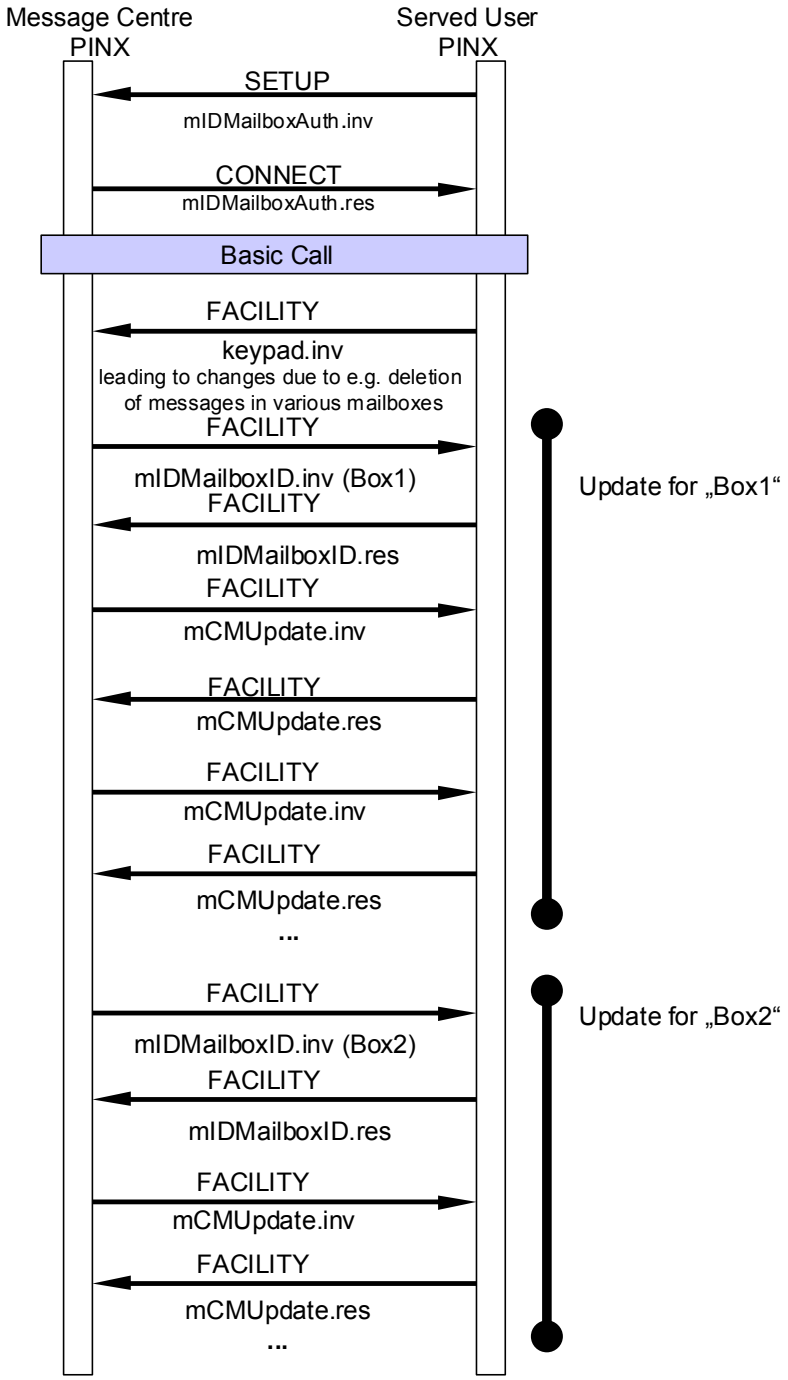

Figure C.3.3 — Message Centre Browsing where the Served User owns several mailboxes at the Message Centre

© ISO/IEC 2004 All rights reserved
Copyright International Organization for Standardization
Reproduced by IHS under license with ISO
No reproduction or networking permitted without license from IHS
Not for Resale

C.4 Example Message Flows for Profile 4

C.4.1 Message retrieval

The Served User establishes a CISC for Message Browsing purposes and indicates retrieval of a message to the Message Centre using Simple Dialog. Make Call Request is used to provide a B-Channel for retrieval of the message (see Figure C.4.1). Afterwards, the communication between the Message Centre and the Served User may continue using the same CISC.

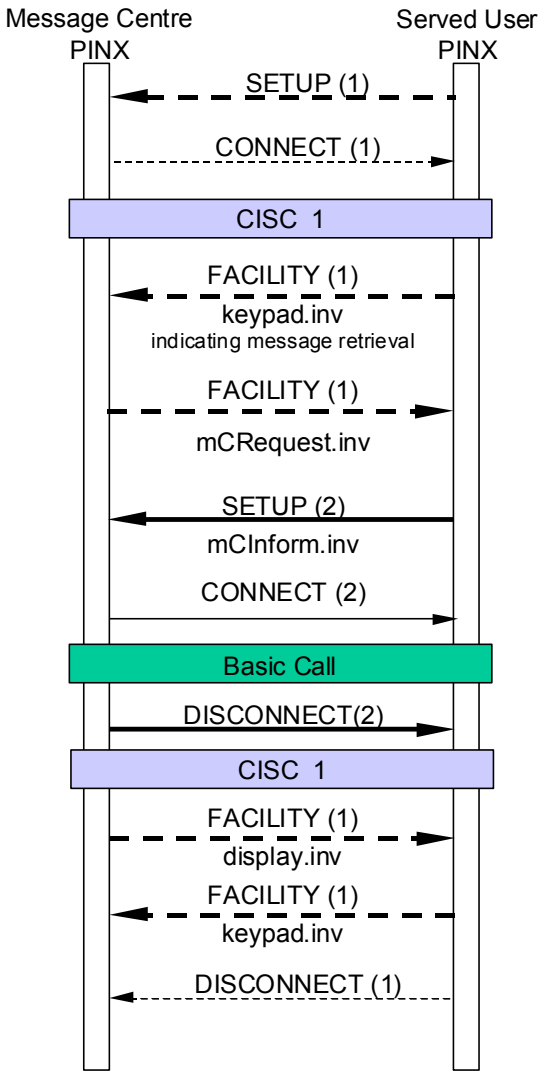

Figure C.4.1 — Retrieval of a message using Make Call Request and Simple Dialog

Copyright International Organization for Standardization
Reproduced by IHS under license with ISO
No reproduction or networking permitted without license from IHS
© ISO/IEC 2004 – All rights reserved
Not for Resale

C.4.2 Message Centre Transfer

The Served User uses a CISC and indicates the request for transfer to, for example, the originator of a message in the Served User's mailbox using Simple Dialog. The Message Centre uses Make Call Request to establish the requested call (see Figure C.4.2). Afterwards, the communication between the Message Centre and the Served User may continue using the same CISC.

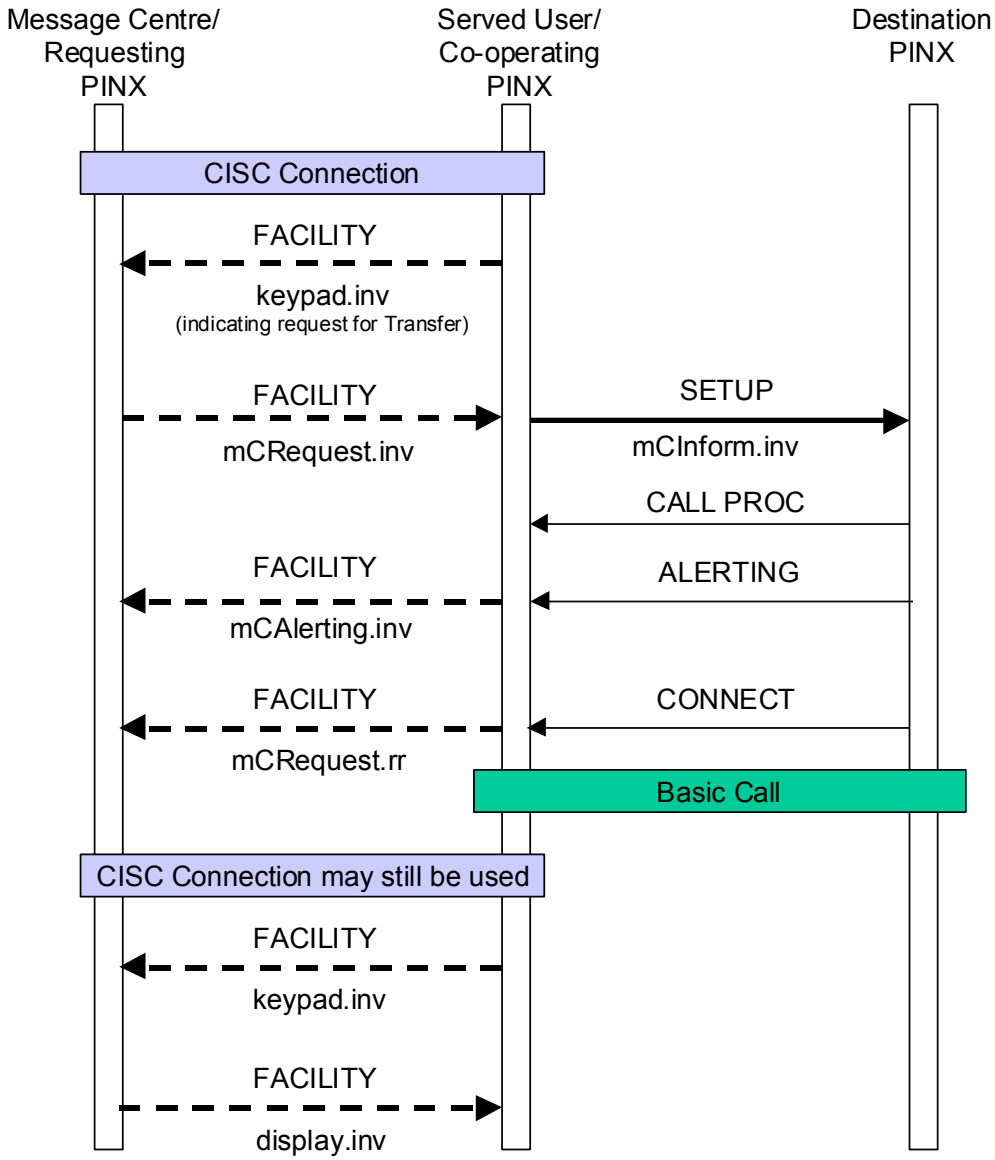

Figure C.4.2 — Message Centre Transfer using Make Call Request and Simple Dialog

© ISO/IEC 2004 All rights reserved
Copyright International Organization for Standardization
Reproduced by IHS under license with ISO
No reproduction or networking permitted without license from IHS
Not for Resale

ICS 33.040.35

Price based on 61 pages

© ISO/IEC 2004 – All rights reserved
Copyright International Organization for Standardization
Reproduced by IHS under license with ISO
No reproduction or networking permitted without license from IHS
Not for Resale