INTERNATIONAL STANDARD

ISO/IEC 1864

Fourth edition
1992-06-15

Information technology — Unrecorded 12,7 mm (0,5 in) wide magnetic tape for information interchange — 32 ftpmm (800 ftpi), NRZ1, 126 ftpmm (3 200 ftpi) phase encoded and 356 ftpmm (9 042 ftpi), NRZ1

Technologie de l'information — Bande magnétique vierge de 12,7 mm (0,5 in) *de large, pour l'échange d'information* — 32 ftpmm (800 ftpi), *NRZ1,* 126 ftpmm (3 200 ftpi) *par codage de phase et* 356 ftpmm (9 042 ftpi), *NRZ1*

Reference number
ISO/IEC 1864:1992(E)

Copyright International Organization for Standardization
Provided by IHS under license with ISO
No reproduction or networking permitted without license from IHS

Not for Resale

Foreword

ISO (the International Organization for Standardization) and IEC (the International Electrotechnical Commission) form the specialized system for worldwide standardization. National bodies that are members of ISO or IEC participate in the development of International Standards through technical committees established by the respective organization to deal with particular fields of technical activity. ISO and IEC technical committees collaborate in fields of mutual interest. Other international organizations, governmental and non-governmental, in liaison with ISO and IEC, also take part in the work.

In the field of information technology, ISO and IEC have established a joint technical committee, ISO/IEC JTC 1. Draft International Standards adopted by the joint technical committee are circulated to national bodies for voting. Publication as an International Standard requires approval by at least 75 % of the national bodies casting a vote.

International Standard ISO/IEC 1864 was prepared by Joint Technical Committee ISO/IEC JTC 1, *Information technology*, Sub-Committee SC 11, *Flexible magnetic media for digital data interchange*.

This fourth edition cancels and replaces the third edition (ISO 1864:1985), of which it constitutes a technical revision.

Annexes A and B form an integral part of this International Standard. Annex C is for information only.

© ISO/IEC 1992
All rights reserved. No part of this publication may be reproduced or utilized in any form or by any means, electronic or mechanical, including photocopying and microfilm, without permission in writing from the publisher.

ISO/IEC Copyright Office • Case Postale 56 • CH-1211 Genève 20 • Switzerland

Printed in Switzerland

Copyright International Organization for Standardization
Provided by IHS under license with ISO
No reproduction or networking permitted without license from IHS

Not for Resale

Information technology — Unrecorded 12,7 mm (0,5 in) wide magnetic tape for information interchange — 32 ftpmm (800 ftpi), NRZ1, 126 ftpmm (3 200 ftpi) phase encoded and 356 ftpmm (9 042 ftpi), NRZ1

1 Scope

This International Standard specifies the characteristics of 12,7 mm (0,5 in) wide magnetic tape with reel, to enable magnetic and mechanical interchangeability of such tape between information processing systems.

This International Standard applies solely to magnetic tape for digital recording using the NRZ1 method of recording at 32 ftpmm and 356 ftpmm (800 ftpi and 9 042 ftpi) or the phase-encoded method of recording at 126 ftpmm (3 200 ftpi) in which the direction of magnetization is nominally longitudinal.

NOTE 1 Some numeric values in the SI and/or Imperial measurement system in this International Standard have been rounded off and therefore are consistent with, but not exactly equal to, each other. Either system may be used, but the two should be neither intermixed nor reconverted. The original design was made using the Imperial measurement system.

2 Normative references

The following standards contain provisions which, through reference in this text, constitute provisions of this International Standard. At the time of publication, the editions indicated were valid. All standards are subject to revision, and parties to agreements based on this International Standard are encouraged to investigate the possibility of applying the most recent editions of the standards indicated below. Members of IEC and ISO maintain registers of currently valid International Standards.

ISO 209-1:1989, *Wrought aluminium and aluminium alloys — Chemical composition and forms of products — Part 1: Chemical composition.*

ISO 468:1982, *Surface roughness — Parameters, their values and general rules for specifying requirements.*

ISO 1863:1990, *Information processing — 9-track, 12,7 mm (0,5 in) wide magnetic tape for information interchange using NRZ1 at 32 ftpmm (800 ftpi) — 32 cpmm (800 cpi).*

ISO/IEC 3788:1990, *Information processing — 9-track, 12,7 mm (0,5 in) wide magnetic tape for information interchange using phase encoding at 126 ftpmm (3 200 ftpi), 63 cpmm (1 600 cpi).*

ISO 5652:1984, *Information processing — 9-Track, 12,7 mm (0.5 in) wide magnetic tape for information interchange — Format and recording, using group coding at 246 cpmm (6 250 cpi).*

ISO 6098:1984, *Information processing — Self-loading cartridges for 12,7 mm (0.5 in) wide magnetic tape.*

ASTM D 2000, *Rubber products in automotive applications, classification system for.*

3 Definitions

For the purposes of this International Standard, the following definitions apply.

3.1 magnetic tape: A tape that will accept and retain the magnetic signals intended for input, output and storage purposes on computers and associated equipment.

3.2 Master Standard Reference Tape: A tape selected as the standard for signal amplitude.

NOTE 2 A Master Standard Reference Tape has been established at the US National Institute of Standards and

Copyright International Organization for Standardization
Provided by IHS under license with ISO
No reproduction or networking permitted without license from IHS
Not for Resale

Technolgy (NIST) for the physical recording densities of 32 ftpmm (800 ftpi) and 126 ftpmm (3 200 ftpi).

A further Master Standard Reference Tape has been established at the NIST for the physical recording density of 356 ftpmm (9 042 ftpi).

3.3 Secondary Standard Reference Tape: A tape for which the magnetic characteristics are known and stated in relation to that of the Master Standard Reference Tape. It is intended that these be used for calibrating tertiary reference tapes for use in routine calibration. See annex B.

NOTE 3 Secondary Standard Reference Tapes are available from the NIST, Office of Standards Reference Materials, Room 205, Building 202, National Institute of Standards Technology, Gaithersburg, MD 20899, USA, under the following part numbers:

SRM 3200 for 32 ftpmm (800 ftpi) and 126 ftpmm (3 200 ftpi)

SRM 6250 for 356 ftpmm (9 042 ftpi)

3.4 Average Signal Amplitude: The average peak-to-peak value of the signal output to the read head when measured over a minimum of 76 mm (3,0 in) of tape.

3.5 Typical Field: In the plot of the Average Signal Amplitude against the recording field at the specified physical recording density, it is the minimum field that causes an Average Signal Amplitude equal to 95 % of the maximum Average Signal Amplitude.

3.6 Reference Field: The typical field of the Master Standard Reference Tape at the specified physical recording density.

3.7 Standard Reference Current: The current that produces the Reference Field.

Traceability to the Standard Reference Current is provided by the calibration factor(s) supplied with each Secondary Standard Reference Tape.

3.8 Test Recording Current: The current that is k times the Standard Reference Current, where k equals:

2,0 to 2,2 at 32 ftpmm (800 ftpi)

1,75 to 1,85 at 126 ftpmm (3 200 ftpi)

1,35 to 1,45 at 356 ftpmm (9 042 ftpi)

3.9 Standard Reference Amplitude; SRA: The Average Signal Amplitude from the Master Standard Reference Tape when it is recorded with the appropriate Test Recording Current at one of the specified physical recording densities.

Traceability to the Standard Reference Amplitude is provided by the calibration factor(s) supplied with each Secondary Standard Reference Tape.

3.10 reference edge: The edge furthest from an observer when the tape is lying flat with the magnetic surface uppermost and the direction of movement for recording is from left to right.

3.11 in-contact: An operating condition in which the magnetic surface of a tape is in contact with a magnetic head.

3.12 track: A longitudinal area on a tape along which a series of magnetic signals may be recorded.

3.13 row: Nine transversely-related locations (one in each track) in which bits are recorded.

3.14 position of flux transition: That point which exhibits the maximum free-space flux density normal to the tape surface.

3.15 physical recording density: The number of recorded flux transitions per unit length of track (ftpmm or ftpi).

3.16 data density: The number of data characters stored per unit length of tape (cpmm or cpi).

3.17 resistance per square: The surface resistance of a square area of any size measured between electrodes placed along two opposite sides of the square. The unit of measurement is the ohm.

3.18 oxide coating to brass and chrome: The resistance of the tape oxide coating to motion on brass (chrome).

3.19 oxide coating to tape back surface: The resistance of the tape oxide coating to motion on the tape back surface.

3.20 tape back surface to stainless steel: The resistance of the tape back surface to motion on stainless steel.

3.21 rubber to tape back surface: The resistance of the tape back surface to motion on rubber.

4 Environment

The conditions specified below refer to the ambient conditions in the test or computer room and not to those within the tape drive equipment.

4.1 Testing environment

Unless otherwise stated, all measurements made on a tape to check compliance with the requirements of this International Standard and all tests

Copyright International Organization for Standardization
Provided by IHS under license with ISO
No reproduction or networking permitted without license from IHS
Not for Resale

prescribed for a tape in this International Standard shall be carried out under the environmental conditions of 23 °C ± 2 °C (73 °F ± 4 °F) and relative humidity 40 % to 60 %, after at least 24 h of conditioning in the same environment.

4.2 Operating environment

The operating temperature shall be within the range 16 °C to 32 °C (60 °F to 90 °F) and the relative humidity 20 % to 80 %. Operation near the extremes of these ranges can result in degraded performance. The wet bulb temperature shall not exceed 25 °C (78 °F).

4.3 Storage environment

During storage, it is recommended that the tapes are kept within the following conditions:

4.3.1 Unrecorded tape

temperature: 5 °C to 48 °C (40 °F to 120 °F)

relative humidity: 20 % to 80 %

wet bulb temperature: not greater than 26 °C (80 °F)

4.3.2 Recorded tape

temperature: 5 °C to 32 °C (40 °F to 90 °F)

relative humidity: 20 % to 80 %

wet bulb temperature: not greater than 26 °C (80 °F)

5 Characteristics of the tape

5.1 Material

The tape shall consist of a base material (oriented polyethylene terephthalate film or its equivalent) coated on one side with a strong yet flexible layer of ferromagnetic material dispersed in a suitable binder. If the tape is also coated on the rear surface, the coating shall be non-ferromagnetic.

5.2 Width

The width of the tape shall be $12{,}7\ ^{+0{,}0}_{-0{,}1}$ mm ($0{,}500\ ^{+0{,}000}_{-0{,}004}$ in).

5.3 Total tape thickness

The total tape thickness, at any point, shall be 0,048 mm ± 0,008 mm (0,001 9 in ± 0,000 3 in).

5.4 Base material thickness

The base material thickness shall be 0,038 mm (0,001 5 in) nominal.

5.5 Coating thickness

The coating thickness shall not exceed 0,015 mm (0,000 6 in).

5.6 Length

The normal minimum length of tape is 732 m (2 400 ft) splice-free. If the length of the tape is less than 732 m (2 400 ft), the actual length shall be stated. Maximum tape length is limited by thickness, E value (see 5.7), moment of inertia and reel dimensions.

5.7 E value

The E value is the radial distance by which the reel flanges extend beyond the outermost layer of a tape which has been wound at a tension of 2 N to 3,6 N (7 ozf to 13 ozf) on the specified reel. The minimum E value shall be 3,2 mm (0,125 in).

When the tape is used with a self-loading cartridge (see ISO 6098), the E value shall satisfy:

$$6{,}3 \text{ mm } (0{,}25 \text{ in}) \leqslant E \leqslant 15{,}9 \text{ mm } (0{,}625 \text{ in})$$

5.8 Elastoplastic properties

The elastoplastic properties of the tape shall be such that when the tape is subjected to a tension of 30 N (108 ozf) for a period of 3 min under any combination of temperature and relative humidity within the ranges of 10 °C to 50 °C (50 °F to 122 °F) and 20 % to 80 % relative humidity, the permanent elongation measured with negligible tension after a second 3 min interval is less than 1,0 %.

5.9 Longitudinal curvature

There shall be a minimum radius of curvature for the edge of the tape, defined and tested by allowing a 1 m (36 in) length of the tape to unroll and assume its natural curvature on a flat surface. The minimum radius shall be 33 m (108 ft). If measured over an arc of a circle, this corresponds to a deviation of 3,8 mm (1/8 in) from a 1 m (36 in) chord.

5.10 Tape wind

Tape shall be wound, with its magnetic surface toward the reel hub, in a clockwise direction; i.e. when the reel is viewed from the front, the loose end of the tape hangs from the right side of the reel. Tape shall be wound with a tension of 2 N to 3,6 N (7 ozf to 13 ozf) (see figure 2).

Copyright International Organization for Standardization
Provided by IHS under license with ISO
No reproduction or networking permitted without license from IHS
Not for Resale

5.11 Magnetic properties

The magnetic properties of the tape are not defined here by B-H loops or similar parameters, but are defined by the testing procedures given in 5.13 and 5.15.

5.12 Test density

For the purpose of testing tape in accordance with this International Standard, the physical recording density shall be 32 ftpmm, 126 ftpmm or 356 ftpmm (800 ftpi, 3 200 ftpi or 9 042 ftpi). The flux transitions shall be uniformly spaced. The flux transition spacing and the track configuration shall conform to ISO 1863, ISO 3788 or ISO 5652 as appropriate.

5.13 Typical Field

The Typical Field of the tape under test shall be within $\pm$ 20 % of the Reference Field for a physical recording density of 32 ftpmm (800 ftpi) or 126 ftpmm (3 200 ftpi) and within $\pm$ 15 % of the Reference Field for a physical recording density of 356 ftpmm (9 042 ftpi).

5.14 Average Signal Amplitude

When read back on a system, each channel of which has been calibrated relative to the SRA, the Average Signal Amplitude shall be within $\pm$ 10 % of the SRA at 32 ftpmm (800 ftpi), within $^{+25}_{-10}$ % at 126 ftpmm (3 200 ftpi) and within $\pm$ 40 % at 356 ftpmm (9 042 ftpi).

This test shall be conducted on the read-while-write pass for both tapes.

NOTE 4 It has been observed that the Average Signal Amplitude level at 356 ftpmm (9 042 ftpi) can vary along the length of tape. This effect is termed "tilt" and is the subject of an investigation to determine its magnitude. Results indicate that a variation of 20 % can be expected. The effect of such variations is included in the specified tolerance on Average Signal Amplitudes.

5.15 Ease of erasure

When a tape has been recorded according to any of the conditions specified in 5.13 and then passed through a longitudinal unidirectional steady field of 79 500 A/m (1 000 Oe), the remaining Average Signal Amplitude shall not exceed 4 % of the SRA for that density.

The erasure field shall be reasonably uniform, such as that in the middle of a solenoid.

5.16 Test for missing pulses and extra pulses

These tests shall be carried out in the in-contact condition and over the entire tested area, which shall extend from 0,2 m (8 in) before the BOT reflective marker to 3,0 m (10 ft) beyond the EOT reflective marker (see figure 1).

When performing the tests in 5.16.1 and 5.16.2, the output or resultant signal shall be measured on the same relative pass for both the Master Standard Reference Tape and the tape under test, i.e. read-while-write or read-on-first-pass-after-write. The SRA shall be measured at the appropriate density.

5.16.1 Missing pulses

When a tape has been recorded on all tracks as specified in 5.12 and 5.13, and is played back on a system, each channel of which has been calibrated as in 5.14, a missing pulse shall be either:

a) at 32 ftpmm (800 ftpi), any signal from any track having a base-to-peak amplitude less than 50 % of half the SRA;

b) at 126 ftpmm (3 200 ftpi), any pair of consecutive output pulses from any track together having a peak-to-peak amplitude less than 35 % of the SRA;

c) at 356 ftpmm (9 042 ftpi), any signal from any track having a base-to-peak amplitude less than 35 % of half the SRA;

5.16.2 Extra pulses

Following DC-erasure of the tape on the machine used for conducting the missing pulse test as described in 5.16.1, any signal from any track when measured base-to-peak which exceeds 10 % of half the SRA shall be an extra pulse.

5.16.3 Allowable number of missing pulses and extra pulses

The allowable number of missing pulses and of extra pulses is not specified by this International Standard, but is a matter for agreement between interchange parties.

NOTE 5 It is considered impractical to specify this number for the following reasons:

a) the performance of test equipment for magnetic tape is not uniform but depends on such things as tape tension, head design, and the method of guidance employed;

b) different machines and systems of programming vary in their ability to tolerate missing and extra pulses on tapes.

Copyright International Organization for Standardization
Provided by IHS under license with ISO
No reproduction or networking permitted without license from IHS
Not for Resale

5.17 Reflective markers

Each reel of tape shall be furnished with two photo-reflective markers, each consisting of, or equivalent to, a transparent plastic base with a metallic (for example, vaporized aluminium) coating sandwiched between the base and a thin layer of low cold flow thermal setting adhesive.

Reflective markers shall be placed on the side of the tape which does not carry the magnetic surface, and they shall be on opposite edges of the tape with the beginning-of-tape reflective marker (BOT) on the reference edge.

The width of the markers shall be 4,8 mm $\pm$ 0,5 mm (0,19 in $\pm$ 0,02 in).

The length of the markers shall be 28 mm $\pm$ 5 mm (1,1 in $\pm$ 0,2 in).

The thickness of the markers, measured after their application to the tape, shall be not greater than 0,020 mm (0,000 8 in).

The beginning-of-tape reflective marker (BOT) shall be placed 4,9 m $\pm$ 0,6 m (16 ft $\pm$ 2 ft) from the beginning of the tape and the end-of-tape marker (EOT) shall be placed 7,6 $^{+22,9}_{-0,0}$ m (25 $^{+75}_{-0}$ ft) from the end of the tape and such that the tested area is at least 720,6 m (2 363 ft) in length.

The distance from the outer edge of a marker to the adjacent edge of the tape shall be 0,8 mm max. (0,031 in max.) and the marker shall not protrude beyond the edge of the tape.

The markers shall be free of wrinkles and excessive adhesive.

NOTE 6 It is desirable that the thinnest markers be employed which perform satisfactorily in minimizing the distortion of the layers of tape adjacent to them.

5.18 Cupping

Cupping is the departure across the width of tape from a flat surface. The maximum cupping of a 6,35 mm (0,25 in) long length of tape shall not exceed 0,25 mm (0,010 in) when placed concave side down on a smooth, flat surface. The time between cutting and the measurement should be 1 h.

5.19 Opacity

Opacity is a characteristic which limits the amount of transmission of light through the tape. The tape opacity shall not be less than 95 % over the wavelength range from 0,4 µm to 1,5 µm (16 µin to 59 µin).

5.20 Resistance

The electrical resistance of the magnetic surface shall be within the range of $5 \times 10^5\ \Omega$ to $5 \times 10^8\ \Omega$.

5.21 Reflectivity

5.21.1 Marker reflectivity

The photo-reflective marker shall possess a reflectivity of at least 90 % compared to a reference standard, at a 60° angle of incidence of light and over the range of wavelengths from 0,4 µm to 1,5 µm (16 µin to 59 µin).

The reference standard shall be constructed from a piece of aluminium Al-Mg 1 Si Cu (see ISO 209-1) with a flat face dimension of 30 mm (1,2 in) by 5 mm (0,20 in) with a surface roughness R_a (arithmetical mean deviation) between 0,008 µm (0,32 µin) and 0,016 µm (0,63 µin) (see ISO 468). The standard should be resurfaced periodically to prevent a reflectivity shift due to oxidation.

5.21.2 Tape backing reflectivity

The tape backing shall possess a reflectivity not exceeding 30 % of that of the reference standard when measured under the conditions specified in 5.21.1.

5.22 Dynamic frictional characteristics

The force specified in 5.22.1.1, 5.22.2.1, 5.22.3.1 and 5.22.4.1 shall be the sum of the forces exerted by the 65 g (2,3 oz) mass and the dynamic friction.

5.22.1 Oxide coating to brass and chrome

5.22.1.1 Requirement

The force shall be 1,28 N max. (4,6 ozf max.).

5.22.1.2 Procedure

The sample shall be pulled at 50 mm (2 in) per minute over a brass (chrome) cylinder (90-degree wrap) of diameter 25 mm (1 in) with a 65 g (2,3 oz) mass on the other end of the tape. The force versus time (or force versus distance) shall be plotted. Particular attention should be given to keeping the samples clean and maintaining the brass (chrome) cylinder finish [0,13 µm to 0,26 µm (5 µin to 10 µin) peak-to-peak].

5.22.2 Oxide coating to tape back surface

5.22.2.1 Requirement

The force shall be 0,78 N min. (2,8 ozf min.).

Copyright International Organization for Standardization
Provided by IHS under license with ISO
No reproduction or networking permitted without license from IHS
Not for Resale

5.22.2.2 Procedure

The oxide-coated surface of the sample shall be pulled at 50 mm (2 in) per minute over a cylinder (90-degree wrap) of diameter 25 mm (1 in) covered with one layer of the same tape, back surface up. A 65 g (2,3 oz) mass shall be suspended on the free end of the tape. The force versus time (or force versus distance) shall be plotted.

5.22.3 Tape back surface to stainless steel

5.22.3.1 Requirement

The force shall be 0,83 N max. (3,0 ozf max.).

5.22.3.2 Procedure

The sample shall be pulled at 50 mm (2 in) per minute over a stainless steel cylinder (90-degree wrap) of diameter 25 mm (1 in) with a 65 g (2,3 oz) mass on the other end of the tape. The force versus time (or force versus distance) shall be plotted. Particular attention should be given to keeping the samples clean and maintaining the stainless steel cylinder finish [0,13 µm to 0,26 µm (5 µin to 10 µin) peak-to-peak].

5.22.4 Rubber to tape back surface

5.22.4.1 Requirement

The force shall be 0,78 N min. (2,8 ozf min.).

5.22.4.2 Procedure

The sample shall be pulled at 50 mm (2 in) per minute over a rubber-coated cylinder (90-degree wrap) with a 65 g (2,3 oz) mass on the other end of the tape.

The cylinder construction shall consist of a stainless steel inner cylinder 25 mm (1 in) in diameter and 18 mm (0,75 in) in length (a centre core convenient for mounting is optional) to which a 5 mm (0,2 in) coating of rubber is vulcanized. This rubber shall be type BG830, in accordance with ASTM D 2000.

The force versus time (or force versus distance) shall be plotted.

6 Reel

6.1 Description

In figure 3, a reel in accordance with this International Standard is shown for illustrative purposes. The reel shall comprise a hub and two flanges. The front flange shall exhibit a circular relieved area. The rear flange shall exhibit a circular groove for a write-enable ring. All dimensions and tolerances specified in table 1 apply both to empty reels and reels wound with tape.

6.2 Construction

6.2.1 Cross-section

Reels shall be constructed such, that any cross-section taken through the central axis of the reel conforms to the cross-section shown in figure 3. The ring groove may have a recess to accommodate the write-enable ring tab as an option. This recess shall not interfere with normal tape transport operation.

6.2.2 Symmetry of reel

Reels shall not be symmetrical, the flanges differing from each other as to the presence or absence of a relieved area or the write-enable ring groove, which shall be adjacent to the mounting pedestal for correct machine operation.

6.2.3 Hub and flanges

Hub and flanges need not be integral, but may be separate parts at the manufacturer's discretion as long as no relative movement between parts can occur and all requirements of this International Standard are met.

6.2.4 Outside surface of flanges

Bosses, ribs, or raised designs are permitted on the outside surface of the flanges, provided that they do not extend beyond the cross-hatched envelope of section A-A shown in figure 3.

6.3 Designation

The reel specified by this International Standard shall be designated by: Size 27.

6.4 Dimensions

6.4.1 Reference surface

The axial dimensions are referred to a reference surface U.

This reference surface U shall be used for reel mounting. It is a circular surface defined by diameters A and D on the rear flange (see 6.4.2 and 6.4.5.1).

6.4.2 Inside diameter of the hub

The inside diameter A of the hub shall be

$93{,}68\ ^{+0{,}13}_{-0{,}08}$ mm (3,688 $^{+0{,}005}_{-0{,}003}$ in)

Copyright International Organization for Standardization
Provided by IHS under license with ISO
No reproduction or networking permitted without license from IHS
Not for Resale

6.4.3 Overall diameter of the flanges

The overall diameter B of the flanges shall be

266,70 $^{+0,25}_{-0,75}$ mm (10,5 $^{+0,010}_{-0,030}$ in)

6.4.4 Outside diameter of the hub

The outside diameter C of the hub shall be

130,18 mm (5,125 in)

The tolerance on this dimension shall be

In ranges N: ± 0,20 mm (± 0,008 in)

In range W: ± 0,13 mm (± 0,005 in)

6.4.5 Dimensions of the groove for the write-enable ring

6.4.5.1 The inside diameter D of the groove shall be

98,42 mm ± 0,13 mm (3,875 in ± 0,005 in)

6.4.5.2 The outside diameter E of the groove shall be

111,46 mm ± 0,13 mm (4,388 in ± 0,005 in)

6.4.5.3 The angle α of the wall of the groove with the axis of the reel shall be

4° ± 15′

6.4.5.4 The depth F of the groove shall be

6,35 $^{+0,25}_{-0,00}$ mm (0,25 $^{+0,010}_{-0,000}$ in)

6.4.6 Distances of the flange surfaces from the reference surface

The thickness of the flange portion of the reels may be varied, but shall fall entirely within the cross-hatched envelopes defined by dimensions J_f, J_r, K_f, K_r and M.

6.4.6.1 The distance J_f of the inside surface of the front flange from the reference surface U shall be

15,8 $^{+0,64}_{-0,13}$ mm (0,622 $^{+0,025}_{-0,005}$ in)

6.4.6.2 The distance J_r of the inside surface of the rear flange from the reference surface U shall be

2,46 $^{+0,13}_{-0,64}$ mm (0,097 $^{+0,005}_{-0,025}$ in)

6.4.6.3 The distance K_f of the outside surface of the front flange from the reference surface U shall be

21,54 mm max. (0,848 in max.)

6.4.6.4 The distance K_r of the outside surface of the rear flange from the reference surface U shall be

2,03 mm max. (0,080 in max.)

6.4.7 Relieved area of the front flange

6.4.7.1 The diameter L of the relieved area of the front flange shall be

104,78 mm min. (4,125 in min.)

6.4.7.2 The distance M of the bottom surface of the relieved area from the reference surface U shall be

18,24 mm ± 0,13 mm (0,718 in ± 0,005 in)

6.4.8 Relieved area of the outer surfaces of the flanges

6.4.8.1 At their outer rim, the outside surfaces of the flanges shall be relieved over a length T of

4,00 mm min. (0,157 in min.)

6.4.8.2 The distance S_f of the surface of the front flange within this relieved area from the reference surface U shall be

19,12 mm max. (0,753 in max.)

6.4.8.3 The distance S_r of the surface of the rear flange within this relieved area from the reference surface U shall be

0,76 mm max. (0,030 in max.)

6.4.8.4 The edges of the flanges shall be rounded and have the following radii:

inner edges: $R_i = 0,89$ mm min. (0,035 in min.)

outer edges: $R_o = 0,38$ mm min. (0,015 in min.)

6.4.9 Relations between dimensions

6.4.9.1 Relation between dimensions A and C

The outside cylindrical surface of the hub shall be concentric with the bore of the hub within 0,50 mm (0,02 in) Total Indicator Reading (TIR).

Copyright International Organization for Standardization
Provided by IHS under license with ISO
No reproduction or networking permitted without license from IHS
Not for Resale

6.4.9.2 Relation between dimension C and the reference surface U

Within ranges N, the perpendicularity of the outside cylindrical surface and the reference surface U shall be within

0,100 mm (0,004 in)

Within range W, it shall be within

0,065 mm (0,003 in)

The nominal length of ranges N shall be

1,5 mm (0,06 in)

6.5 Other physical characteristics

6.5.1 Moment of inertia

The moment of inertia of the tape and reel combined shall not exceed 10,3 $g \cdot m^2$ (562 $oz \cdot in^2$). In general, this will require a reel whose moment of inertia does not exceed 2,71 $g \cdot m^2$ (148 $oz \cdot in^2$).

6.5.2 Rigidity of the hub

Dimension A shall not be reduced to less than 93,6 mm (3,685 in) when the reel is fully loaded with tape wound at a constant tension of 3,6 N (13 ozf).

6.6 Identification of ownership

An identification area shall be provided on the front flange of the reel for ownership identification.

6.7 Manufacturer's reel identification

The manufacturer's identification may be placed on the reel.

6.8 Interchange label

A labelling area or card holder may be provided on the front flange. Adhesive labels, if employed, shall be of a type which leave no residue when removed and their addition shall not increase the dimension of the flange beyond the cross-hatched envelope of section A-A shown in figure 3.

6.9 Write-enable ring

6.9.1 Outer surface

When installed in the write-enable ring groove, the outer surface of the write-enable ring shall not protrude above the mounting reference surface (U) within a radius of 54,03 mm (2,127 in).

6.9.2 Tab

The write-enable ring shall have a tab to facilitate removal from the groove.

6.9.3 Construction

Dimensions and materials used shall be such that the write-enable ring can be inserted and removed with reasonable effort and remain inserted during normal use. Furthermore, the ring shall be constructed so as not to interfere with normal tape transport performance.

Copyright International Organization for Standardization
Provided by IHS under license with ISO
No reproduction or networking permitted without license from IHS
Not for Resale

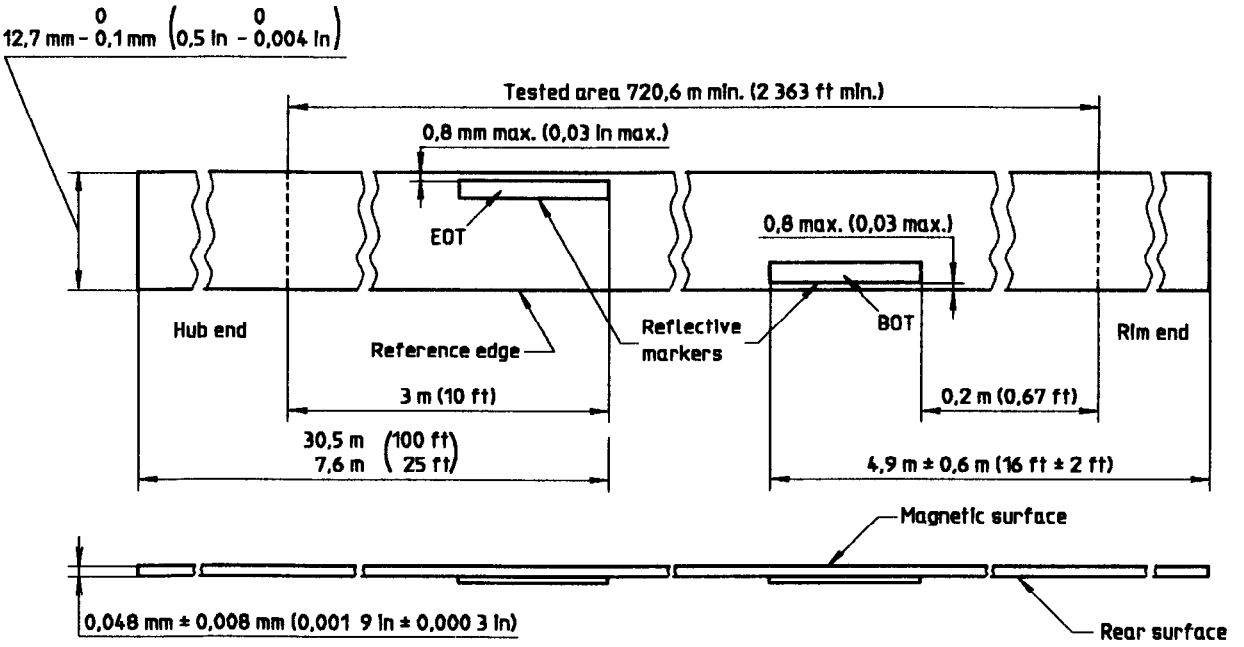

Figure 1 — Tape characteristics

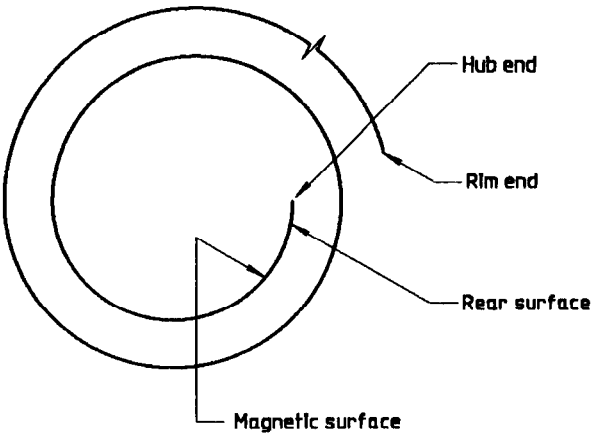

Figure 2 — Tape winding

Copyright International Organization for Standardization
Provided by IHS under license with ISO
No reproduction or networking permitted without license from IHS
Not for Resale

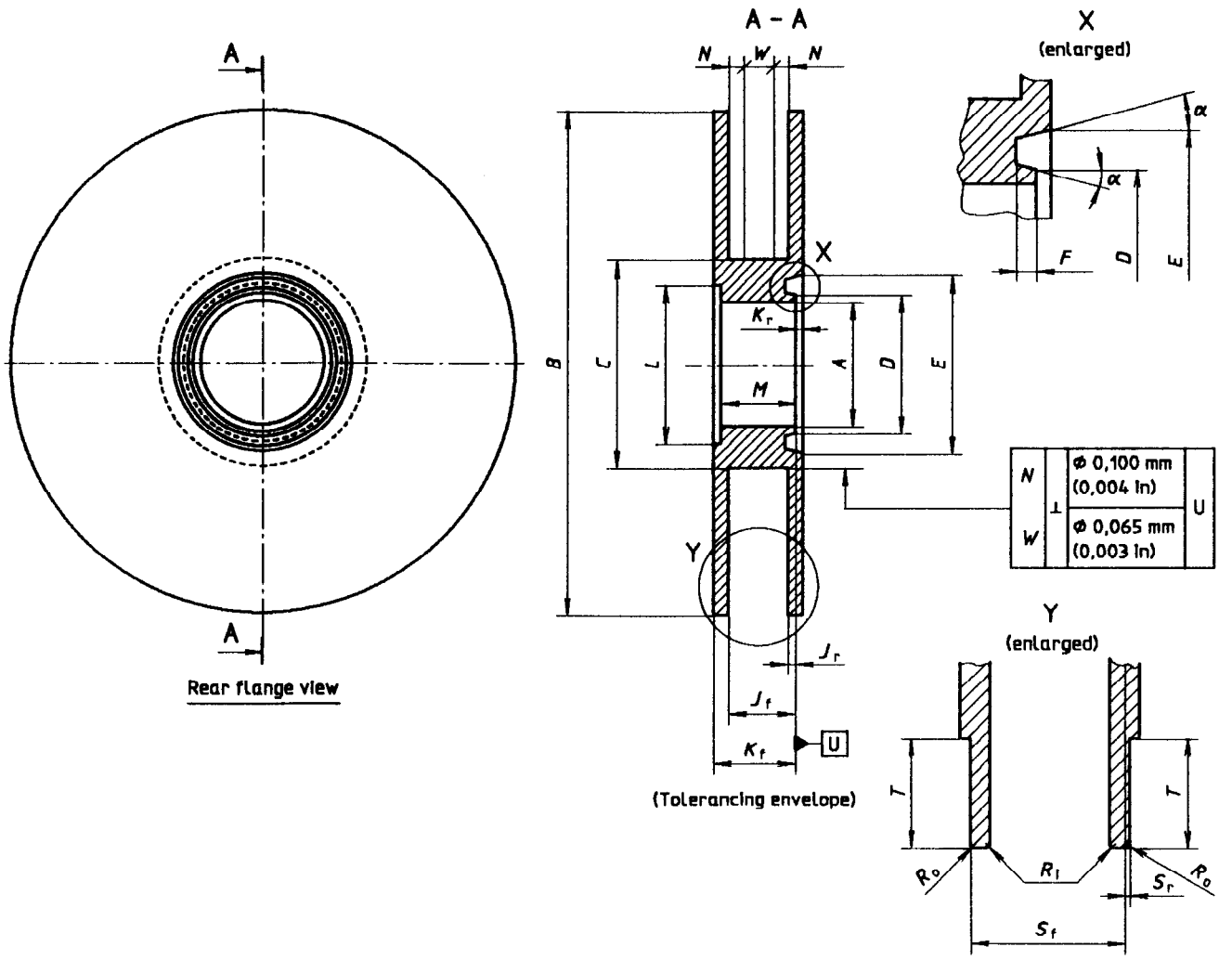

Figure 3 — Reel characteristics

Copyright International Organization for Standardization
Provided by IHS under license with ISO
No reproduction or networking permitted without license from IHS
Not for Resale

Table 1 — Reel dimensions

Dimensions in millimetres			Dimensions in inches	
Nominal	**Tolerance**	**Symbol**	**Nominal**	**Tolerance**
93,68	$^{+0,13}_{-0,08}$	A	3,688	$^{+0,005}_{-0,003}$
266,70	$^{+0,25}_{-0,75}$	B	10,5	$^{+0,01}_{-0,03}$
130,18	$(N) \pm 0,20$ $(W) \pm 0,13$	C	5,125	$(N) \pm 0,008$ $(W) \pm 0,005$
98,42	$\pm$ 0,13	D	3,875	$\pm$ 0,005
111,46	$\pm$ 0,13	E	4,388	$\pm$ 0,005
6,35	$^{+0,25}_{-0,00}$	F	0,25	$^{+0,010}_{-0,000}$
15,8	$^{+0,64}_{-0,13}$	J_f	0,622	$^{+0,025}_{-0,005}$
2,46	$^{+0,13}_{-0,64}$	J_r	0,097	$^{+0,005}_{-0,025}$
21,54	Maximum	K_f	0,848	Maximum
2,03	Maximum	K_r	0,080	Maximum
104,78	Minimum	L	4,125	Minimum
18,24	$\pm$ 0,13	M	0,718	$\pm$ 0,005
1,5	not applicable	N	0,06	not applicable
0,38	Minimum	R_o	0,015	Minimum
0,89	Minimum	R_i	0,035	Minimum
0,76	Maximum	S_r	0,030	Maximum
19,12	Maximum	S_f	0,753	Maximum
4,00	Minimum	T	0,157	Minimum
10,34	not applicable	W	0,405	not applicable
Angle in degrees				
4°	$\pm$ 15′	α	4°	$\pm$ 15′

Copyright International Organization for Standardization
Provided by IHS under license with ISO
No reproduction or networking permitted without license from IHS
Not for Resale

Annex A
(normative)

Reels conforming to the first edition of this International Standard

The reels defined in the first edition (1975) of this International Standard differ in certain aspects from the reels defined in this edition. These are:

a) $B = 266{,}7$ mm $\pm$ 0,51 mm (10,5 in $\pm$ 0,020 in)

b) R_i and R_o were not specified.

c) The maximum distance K_f ($M + K_f$ in the first edition) between the front flange outside surface and mounting surface is 21,54 mm (0,848 in) at all points and does not need to be reduced to 19,12 mm (0,753 in) over the distance T, as now specified by S_f.

d) The maximum distance K_r between the rear flange outside surface and the mounting surface is 2,03 mm (0,080 in) at all points and does not need to be reduced to 0,76 mm (0,03 in) over the distance T as now specified by S_r.

The new requirements are to enable self-loading cartridges to be used and are within the requirements of the first edition (1975).

Reels conforming to the first edition are suitable for data interchange provided that they are not used together with self-loading cartridges.

Copyright International Organization for Standardization
Provided by IHS under license with ISO
No reproduction or networking permitted without license from IHS
Not for Resale

Annex B
(normative)

Procedure for the use of an SRM magnetic tape

B.1 Stabilization of the test system

Switch on the test system and allow a minimum of one hour for the temperature of the components to stabilize so that the amplifier gains will remain stable during the following operations.

The test system shall remain switched on until all operations have been completed.

B.2 Procedure for the calibration of the test system

B.2.1 To minimise the use of the SRM tape, and the risk of damage to it, test the system for correct operation using a tape other than the SRM tape.

B.2.2 The SRM tape shall be bulk erased prior to use.

B.2.3 Load the SRM tape and make one forward and one reverse pass at normal speed to re-tension the tape.

NOTE 7 An SRM tape should not be wound at high speed.

B.2.4 Make a complete forward read-while-write pass with the SRM tape and plot the saturation curve (see figure B.1), that is, the curve of Average Signal Amplitude versus write current.

Writing shall commence at the beginning of the calibrated portion of the SRM tape.

For an SRM 3200 tape, writing shall commence 92 m (300 ft) after the BOT marker.

For an SRM 6250 tape, writing shall commence 305 m (1 000 ft) after the BOT marker.

Partial passes shall not be made with an SRM tape.

B.2.5 Rewind the SRM tape at normal speed.

B.2.6 Determine the maximum Average Signal Amplitude from the saturation curve.

B.2.7 Determine I_1, the minimum write current required to give an Average Signal Amplitude equal to 95 % of the value determined in B.2.6.

I_1 is the current required to produce on the test system the Typical Field for the particular SRM tape.

B.2.8 Multiply I_1 by the current calibration factor, C_c, provided with the SRM tape, to obtain I_2 (but see annex C).

I_2 is the write current required to produce the Reference Field on the test system. It is the Standard Reference Current (see 3.7). The Reference Field is the Typical Field of the Master Standard Reference Tape (3.6).

B.2.9 Multiply I_2 by the factor K to obtain I_3, the Test Recording Current for the user's test system.

For SRM 3200 used at a recording density of 32 ftpmm (800 ftpi), $K = 2{,}1$.

For SRM 3200 used at a recording density of 126 ftpmm (3 200 ftpi), $K = 1{,}8$.

For SRM 6250 used at a recording density of 356 ftpmm (9 042 ftpi), $K = 1{,}4$.

B.2.10 Determine the Average Signal Amplitude A_1 produced by the SRM tape at the write current I_3.

B.2.11 Multiply A_1 by the amplitude correction factor C_a, provided with the SRM tape, to obtain A_2 (but see annex C).

A_2 is the SRA on the test system.

B.3 Procedure for calibrating a tertiary tape

B.3.1 The tertiary tape shall be bulk erased prior to use.

B.3.2 Load the tertiary tape and make one forward and one reverse pass at the normal tape speed to re-tension the tape.

Copyright International Organization for Standardization
Provided by IHS under license with ISO
No reproduction or networking permitted without license from IHS
Not for Resale

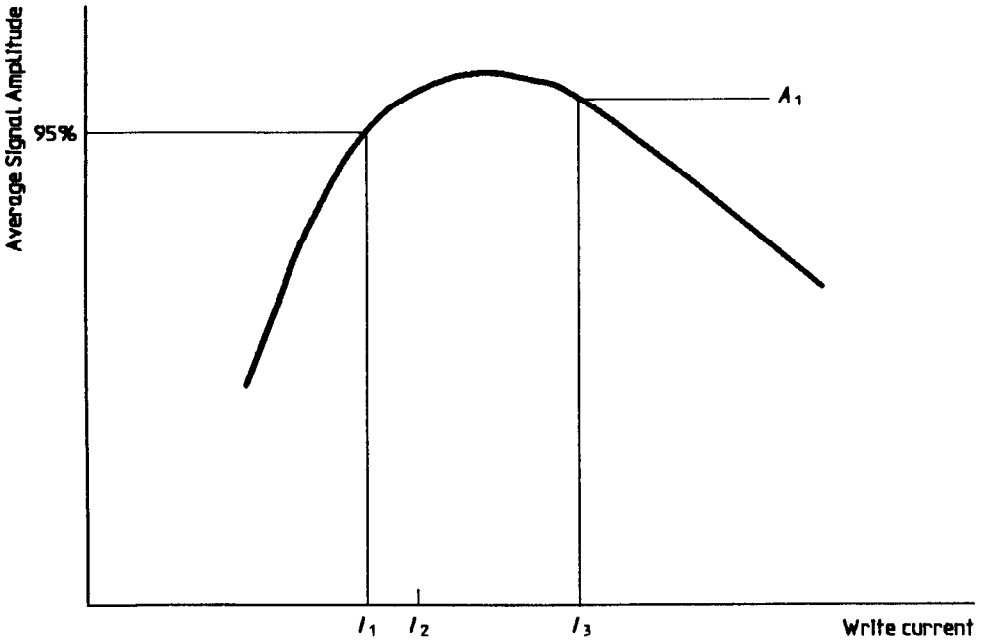

Figure B.1 — Saturation curve of SRM tape on user's test system

Some types of tape give a significant rise in the output signal amplitude with usage. If such a type of tape is to be used as a tertiary tape, additional forward and reverse passes shall be made until the rise in signal amplitude per pass is less than 0,05 %.

As a guide, an SRM tape is subjected to 40 complete passes to EOT and back to BOT prior to calibration.

B.3.3 Make a complete forward read-while-write pass, ignoring at least the first 12,5 m (50 ft) of tape where there could be a significant change in output with distance along the tape, and plot the saturation curve.

B.3.4 Rewind the tertiary tape at normal speed.

B.3.5 Determine the maximum Average Signal Amplitude.

B.3.6 Determine I_{t1}, the minimum write current required to give an Average Signal Amplitude equal to 95 % of the value determined in B.3.5.

The current calibration factor for the tertiary tape relative to the Master Standard Reference tape shall be calculated from the ratio:

$$C_{tc} = \frac{I_2}{I_{t1}}$$

B.3.7 Determine A_{t1}, the Average Signal Amplitude at the write current I_3.

The amplitude calibration factor for the tertiary tape relative to the Master Standard Tape shall be calculated from the ratio:

$$C_{ta} = \frac{\text{SRA}}{A_{t1}}$$

NOTE 8 It may be desirable to re-run the SRM tape at the conclusion of the above operations to verify the stability of the test system. However, the SRM tape should not be run more than necessary since its output signal amplitude will rise with usage.

Copyright International Organization for Standardization
Provided by IHS under license with ISO
No reproduction or networking permitted without license from IHS
Not for Resale

Annex C
(informative)

Derivation of calibration factors C_c and C_a

SRM tapes supplied prior to the adoption, in 1989, of the procedure in annex B were not provided with calibration factors C_c and C_a. Such SRM tapes were provided with saturation curves for the Master Standard Reference Tape and for the particular SRM as measured on the NIST test system.

C_c and C_a are derived from these curves as follows.

C.1 Derivation of C_c

C.1.1 From the saturation curve for the Master Standard Reference Tape determine I_r, which is the minimum write current required on the NIST system to give the amplitude units equal to 95 % of the maximum amplitude units.

I_r is the Standard Reference Current.

C.1.2 From the saturation curve for the SRM tape determine I_t, which is the minimum write current required on the NIST system to give the amplitude units equal to 95 % of the maximum amplitude units.

The current I_t is that required to produce, on the NIST system, the Typical Field for the SRM tape.

C.1.3 C_c is the ratio

$$\frac{I_r}{I_t}$$

C.2 Derivation of C_a

C.2.1 Multiply I_r by the value of K appropriate to the physical recording density being used to give the Test Recording Current on the NIST system.

C.2.2 From the saturation curve for the Master Standard Reference Tape determine the SRA, which is the amplitude at the Test Recording Current.

C.2.3 From the saturation curve for the SRM tape, determine the amplitude at the Test Recording Current.

C.2.4 C_a is the ratio

$$\frac{\text{SRA}}{\text{output of the SRM at the Test Recording Current}}$$

Copyright International Organization for Standardization
Provided by IHS under license with ISO
No reproduction or networking permitted without license from IHS
Not for Resale

UDC 681.327.636

Descriptors: data processing, information interchange, data recording devices, magnetic tapes, half-inch magnetic tapes, reels, specifications, dimensions, designation, interchangeability.

Price based on 15 pages

Copyright International Organization for Standardization
Provided by IHS under license with ISO
No reproduction or networking permitted without license from IHS

Not for Resale