INTERNATIONAL STANDARD

ISO/IEC 18051

Fourth edition
2007-12-15

Information technology — Telecommunications and information exchange between systems — Services for Computer Supported Telecommunications Applications (CSTA) Phase III

Technologies de l'information — Télécommunications et échange d'information entre systèmes — Services pour applications en télécommunications supportées par ordinateur (CSTA) en phase III

Reference number
ISO/IEC 18051:2007(E)

© ISO/IEC 2007

Copyright International Organization for Standardization
Provided by IHS under license with ISO
No reproduction or networking permitted without license from IHS

Not for Resale

PDF disclaimer

This PDF file may contain embedded typefaces. In accordance with Adobe's licensing policy, this file may be printed or viewed but shall not be edited unless the typefaces which are embedded are licensed to and installed on the computer performing the editing. In downloading this file, parties accept therein the responsibility of not infringing Adobe's licensing policy. The ISO Central Secretariat accepts no liability in this area.

Adobe is a trademark of Adobe Systems Incorporated.

Details of the software products used to create this PDF file can be found in the General Info relative to the file; the PDF-creation parameters were optimized for printing. Every care has been taken to ensure that the file is suitable for use by ISO member bodies. In the unlikely event that a problem relating to it is found, please inform the Central Secretariat at the address given below.



COPYRIGHT PROTECTED DOCUMENT

© ISO/IEC 2007

All rights reserved. Unless otherwise specified, no part of this publication may be reproduced or utilized in any form or by any means, electronic or mechanical, including photocopying and microfilm, without permission in writing from either ISO at the address below or ISO's member body in the country of the requester.

ISO copyright office
Case postale 56 • CH-1211 Geneva 20
Tel. + 41 22 749 01 11
Fax + 41 22 749 09 47
E-mail copyright@iso.org
Web www.iso.org

Published in Switzerland

--`,,```,,,,````-`-`,,`,,`,`,,`---

::

Copyright International Organization for Standardization
Provided by IHS under license with ISO
No reproduction or networking permitted without license from IHS

© ISO/IEC 2007 – All rights reserved

Not for Resale

Contents

Page

Foreword . . . xi
Introduction . . . xii
1 Scope . . . 1
2 Conformance . . . 1
2.1 Switching Function . . . 1
2.1.1 Conformant Services . . . 2
2.1.2 Conformant Events . . . 2
2.1.3 CSTA Profiles . . . 2
2.1.4 Support of Service Requests And Manual Mode . . . 5
2.2 Special Resource Function Conformance . . . 5
2.2.1 Conformant Services . . . 6
2.2.2 Conformant Events . . . 6
2.2.3 Support of Service Requests And Manual Mode . . . 6
2.3 Computing Function Conformance . . . 6
3 References . . . 7
4 Definitions and Abbreviations . . . 8
5 Functional Architecture . . . 8
6 CSTA Operational Model . . . 8
6.1 Switching Sub-Domain Model . . . 9
6.1.1 Device . . . 9
6.1.2 Call . . . 42
6.1.3 Connection . . . 49
6.1.4 Call State Definitions . . . 53
6.1.5 Referencing Devices, Elements, Appearances and Device Configurations . . . 54
6.1.6 Management of Dynamically-Assigned Identifiers . . . 56
6.2 I/O Services . . . 56
6.2.1 Data Path Definition . . . 57
6.2.2 I/O Registration Services . . . 58
6.2.3 Data Path States and Operational Model . . . 58
6.2.4 I/O Services Example . . . 58
6.3 Call Detail Record (CDR) Services . . . 59
6.3.1 CDR Services Examples . . . 59
6.4 Capabilities Exchange . . . 61
6.4.1 Switching Function Capabilities . . . 62
6.4.2 Device Capabilities . . . 62
6.4.3 Dynamic Feature Availability . . . 62
6.5 Switching Function Information Synchronization . . . 63
6.5.1 Switching Function Level Information . . . 63
6.5.2 Device Level Information . . . 63
6.5.3 Call Level Information . . . 63
6.6 Status Reporting Services . . . 64
6.6.1 System Status . . . 64
6.6.2 Monitoring . . . 65
6.6.3 Snapshot Services . . . 69
6.7 Additional Services, Features & Behaviour . . . 69
6.7.1 Forwarding . . . 69
6.7.2 Connection Failure . . . 71
6.7.3 Recall . . . 73
6.7.4 Call Back . . . 74
6.7.5 External Calls . . . 74
6.7.6 Tracking a Diverted Call . . . 75

© ISO/IEC 2007 – All rights reserved

Copyright International Organization for Standardization
Provided by IHS under license with ISO
No reproduction or networking permitted without license from IHS
Not for Resale

6.7.7 Media Stream Access 75
6.7.8 Routeing Services 79
6.7.9 Device Maintenance 84
6.7.10 Prompting 84
6.7.11 Telephony Tones Features 84
6.7.12 DTMF and Rotary Pulse Digits Features 85
6.7.13 Data Collection Services 85

7 Association Establishment 85
7.1 Implicit Association created using CSTA System Status service (initiated by Switching Function) 86
7.2 Implicit Association created using CSTA Request System Status service 86
7.3 Explicit Association created using ACSE 87
7.4 Explicit Association created using Ecma Application Session (ECMA-354) Services 88

8 Security Service 89

9 Generic Service Requirements 89
9.1 Service Request 89
9.2 Service Response (Acknowledgements) 90
9.2.1 Positive Acknowledgement Models 90
9.2.2 Negative Acknowledgement 91
9.3 Diagnostic Error Definitions 91
9.3.1 Error Categories 91
9.3.2 Error Values 92
9.4 Vendor Specific Extensions 93
9.4.1 Private Data 93
9.4.2 Escape Services and Private Event 94
9.5 General Services and Event Functional Requirements 95
9.5.1 Services 95
9.5.2 Events 97

10 CSTA Device Identifier Formats 97
10.1 Device Identifier Formats 97
10.1.1 Diallable Digits 98
10.1.2 Switching Function Representation 99
10.1.3 Device Number 101
10.1.4 URI Representation 101
10.2 Functional Requirements 101

11 Template Descriptions 102
11.1 Service Template 102
11.1.1 Service Description 102
11.1.2 Service Request 103
11.1.3 Service Response 103
11.1.4 Operational Model 103
11.2 Event Template 104
11.2.1 Event Description 104
11.2.2 Event Parameters 104
11.2.3 Event Causes 104
11.2.4 Functional Requirements 104
11.3 Parameter Type Template 104
11.3.1 Parameter Type Description 105
11.3.2 Format 105
11.3.3 Functional Requirements 105

12 Parameter Types 105
12.1 Definitions 105
12.2 Defined Parameter Types 106
12.2.1 AccountInfo 107
12.2.2 AgentPassword 107

--`,,```,,,,````-`-`,,`,,`,`,,`---

© ISO/IEC 2007 – All rights reserved
Copyright International Organization for Standardization
Provided by IHS under license with ISO
No reproduction or networking permitted without license from IHS
Not for Resale

12.2.3 AuthCode . . . 107
12.2.4 CallCharacteristics . . . 108
12.2.5 CallLinkageData . . . 108
12.2.6 CallQualifyingData . . . 110
12.2.7 ChargingInfo . . . 110
12.2.8 ConnectionInformation . . . 111
12.2.9 ConnectionList . . . 112
12.2.10 CorrelatorData . . . 112
12.2.11 CSTAPrivateData . . . 113
12.2.12 CSTASecurityData . . . 114
12.2.13 DeviceHistory . . . 114
12.2.14 ErrorValue . . . 115
12.2.15 EventCause . . . 126
12.2.16 LanguagePreferences . . . 129
12.2.17 LocalConnectionState . . . 130
12.2.18 MediaCallCharacteristics . . . 130
12.2.19 MediaServiceType . . . 132
12.2.20 MessageInfo . . . 133
12.2.21 MonitorFilter . . . 134
12.2.22 ServicesPermitted . . . 134
12.2.23 SimpleCallState . . . 135
12.2.24 SubjectOfCall . . . 135
12.2.25 SystemStatus . . . 136
12.2.26 TimeInfo . . . 136
12.2.27 UserData . . . 136
12.3 Identifier Parameter Types . . . 137
12.3.1 AgentID . . . 138
12.3.2 AssociatedCalledDeviceID . . . 138
12.3.3 AssociatedCallingDeviceID . . . 139
12.3.4 AuditoryApparatusID . . . 139
12.3.5 ButtonID . . . 140
12.3.6 CalledDeviceID . . . 140
12.3.7 CallingDeviceID . . . 140
12.3.8 CDRCrossRefID . . . 141
12.3.9 ConnectionID . . . 141
12.3.10 DCollCrossRefID . . . 143
12.3.11 DeviceID . . . 143
12.3.12 DisplayID . . . 143
12.3.13 EscapeRegisterID . . . 143
12.3.14 HookswitchID . . . 144
12.3.15 IOCrossRefID . . . 144
12.3.16 IORegisterReqID . . . 144
12.3.17 LampID . . . 144
12.3.18 MediaServiceInstanceID . . . 145
12.3.19 MediaStreamID . . . 145
12.3.20 MessageID . . . 145
12.3.21 MonitorCrossRefID . . . 145
12.3.22 NetworkCalledDeviceID . . . 145
12.3.23 NetworkCallingDeviceID . . . 146
12.3.24 RedirectionDeviceID . . . 146
12.3.25 ResourceID . . . 147
12.3.26 RingerID . . . 147
12.3.27 RouteingCrossRefID . . . 147
12.3.28 RouteRegisterReqID . . . 148
12.3.29 ServiceCrossRefID . . . 148
12.3.30 SubjectDeviceID . . . 148
12.3.31 SysStatRegisterID . . . 149

© ISO/IEC 2007 – All rights reserved

Copyright International Organization for Standardization
Provided by IHS under license with ISO
No reproduction or networking permitted without license from IHS
Not for Resale

13 Capability Exchange Services 149
13.1 Services 149
13.1.1 Get CSTA Features 149
13.1.2 Get Logical Device Information 151
13.1.3 Get Physical Device Information 161
13.1.4 Get Switching Function Capabilities 165
13.1.5 Get Switching Function Devices 180
13.1.6 Switching Function Devices 182

14 System Services 186
14.1 Registration Services 186
14.1.1 Change System Status Filter 186
14.1.2 System Register 188
14.1.3 System Register Abort 190
14.1.4 System Register Cancel 191
14.2 Services 193
14.2.1 Request System Status 193
14.2.2 System Status 195
14.2.3 Switching Function Capabilities Changed 196
14.2.4 Switching Function Devices Changed 197

15 Monitoring Services 198
15.1 Services 198
15.1.1 Change Monitor Filter 199
15.1.2 Monitor Start 200
15.1.3 Monitor Stop 204

16 Snapshot Services 205
16.1 Services 205
16.1.1 Snapshot Call 205
16.1.2 Snapshot Device 209
16.1.3 Snapshot CallData 211
16.1.4 Snapshot DeviceData 213

17 Call Control Services & Events 215
17.1 Services 215
17.1.1 Accept Call 216
17.1.2 Alternate Call 218
17.1.3 Answer Call 221
17.1.4 Call Back Call-Related 223
17.1.5 Call Back Message Call-Related 226
17.1.6 Camp On Call 229
17.1.7 Clear Call 231
17.1.8 Clear Connection 234
17.1.9 Conference Call 237
17.1.10 Consultation Call 241
17.1.11 Deflect Call 246
17.1.12 Dial Digits 249
17.1.13 Directed Pickup Call 252
17.1.14 Group Pickup Call 255
17.1.15 Hold Call 259
17.1.16 Intrude Call 261
17.1.17 Join Call 265
17.1.18 Make Call 269
17.1.19 Make Predictive Call 274
17.1.20 Park Call 279
17.1.21 Reconnect Call 282
17.1.22 Retrieve Call 285
17.1.23 Send Message 286

--`,,```,,,,````-`-`,,`,,`,`,,`---

© ISO/IEC 2007 – All rights reserved
Copyright International Organization for Standardization
Provided by IHS under license with ISO
No reproduction or networking permitted without license from IHS
Not for Resale

17.1.24 Single Step Conference Call 291
17.1.25 Single Step Transfer Call 295
17.1.26 Transfer Call 298
17.2 Events 301
17.2.1 Bridged 301
17.2.2 Call Cleared 303
17.2.3 Conferenced 306
17.2.4 Connection Cleared 311
17.2.5 Delivered 315
17.2.6 Digits Dialled 320
17.2.7 Diverted 322
17.2.8 Established 327
17.2.9 Failed 332
17.2.10 Held 337
17.2.11 Network Capabilities Changed 339
17.2.12 Network Reached 342
17.2.13 Offered 346
17.2.14 Originated 351
17.2.15 Queued 354
17.2.16 Retrieved 358
17.2.17 Service Initiated 359
17.2.18 Transferred 362

18 Call Associated Features 366
18.1 Services 366
18.1.1 Associate Data 367
18.1.2 Cancel Telephony Tones 369
18.1.3 Change Connection Information 370
18.1.4 Generate Digits 373
18.1.5 Generate Telephony Tones 375
18.1.6 Send User Information 377
18.2 Events 379
18.2.1 Call Information 380
18.2.2 Charging 382
18.2.3 Digits Generated 383
18.2.4 Telephony Tones Generated 384
18.2.5 Service Completion Failure 386

19 Media Attachment Services & Events 389
19.1 Services 389
19.1.1 Attach Media Service 389
19.1.2 Detach Media Service 392
19.2 Events 395
19.2.1 Media Attached 395
19.2.2 Media Detached 396

20 Routeing Services 398
20.1 Registration Services 399
20.1.1 Route Register 399
20.1.2 Route Register Abort 401
20.1.3 Route Register Cancel 402
20.2 Services 403
20.2.1 Re-Route 403
20.2.2 Route End 404
20.2.3 Route Reject 406
20.2.4 Route Request 408
20.2.5 Route Select 410
20.2.6 Route Used 412

© ISO/IEC 2007 – All rights reserved

Copyright International Organization for Standardization
Provided by IHS under license with ISO
No reproduction or networking permitted without license from IHS
Not for Resale

21 Physical Device Features 414
21.1 Services 414
21.1.1 Button Press 415
21.1.2 Get Auditory Apparatus Information 416
21.1.3 Get Button Information 419
21.1.4 Get Display 420
21.1.5 Get Hookswitch Status 422
21.1.6 Get Lamp Information 424
21.1.7 Get Lamp Mode 426
21.1.8 Get Message Waiting Indicator 428
21.1.9 Get Microphone Gain 429
21.1.10 Get Microphone Mute 430
21.1.11 Get Ringer Status 432
21.1.12 Get Speaker Mute 434
21.1.13 Get Speaker Volume 435
21.1.14 Set Button Information 436
21.1.15 Set Display 437
21.1.16 Set Hookswitch Status 440
21.1.17 Set Lamp Mode 441
21.1.18 Set Message Waiting Indicator 442
21.1.19 Set Microphone Gain 444
21.1.20 Set Microphone Mute 445
21.1.21 Set Ringer Status 446
21.1.22 Set Speaker Mute 448
21.1.23 Set Speaker Volume 449
21.2 Events 451
21.2.1 Button Information 451
21.2.2 Button Press 452
21.2.3 Display Updated 452
21.2.4 Hookswitch 454
21.2.5 Lamp Mode 454
21.2.6 Message Waiting 455
21.2.7 Microphone Gain 456
21.2.8 Microphone Mute 457
21.2.9 Ringer Status 457
21.2.10 Speaker Mute 458
21.2.11 Speaker Volume 459

22 Logical Device Features 460
22.1 Services 460
22.1.1 Call Back Non-Call-Related 461
22.1.2 Call Back Message Non-Call-Related 462
22.1.3 Cancel Call Back 463
22.1.4 Cancel Call Back Message 465
22.1.5 Get Agent State 466
22.1.6 Get Auto Answer 468
22.1.7 Get Auto Work Mode 469
22.1.8 Get CallBack 470
22.1.9 Get Caller ID Status 472
22.1.10 Get Do Not Disturb 473
22.1.11 Get Forwarding 474
22.1.12 Get Last Number Dialled 478
22.1.13 Get Routeing Mode 479
22.1.14 Set Agent State 480
22.1.15 Set Auto Answer 484
22.1.16 Set Auto Work Mode 486
22.1.17 Set Caller ID Status 487

--`,,```,,,,````-`-`,,`,,`,`,,`---

Copyright International Organization for Standardization
Provided by IHS under license with ISO
No reproduction or networking permitted without license from IHS

© ISO/IEC 2007 – All rights reserved

Not for Resale

22.1.18 Set Do Not Disturb 489
22.1.19 Set Forwarding 490
22.1.20 Set Routeing Mode 492
22.2 Events 494
22.2.1 Agent Busy 494
22.2.2 Agent Logged Off 495
22.2.3 Agent Logged On 496
22.2.4 Agent Not Ready 497
22.2.5 Agent Ready 498
22.2.6 Agent Working After Call 499
22.2.7 Auto Answer 500
22.2.8 Auto Work Mode 501
22.2.9 Call Back 502
22.2.10 Call Back Message 502
22.2.11 Caller ID Status 503
22.2.12 Do Not Disturb 503
22.2.13 Forwarding 504
22.2.14 Routeing Mode 506

23 Device Maintenance Events 507
23.1 Events 507
23.1.1 Back In Service 507
23.1.2 Device Capabilities Changed 508
23.1.3 Out Of Service 508
23.1.4 Partially In Service 509

24 I/O Services 510
24.1 Registration Services 511
24.1.1 I/O Register 511
24.1.2 I/O Register Abort 512
24.1.3 I/O Register Cancel 513
24.2 I/O Services 514
24.2.1 Data Path Resumed 515
24.2.2 Data Path Suspended 516
24.2.3 Fast Data 517
24.2.4 Resume Data Path 519
24.2.5 Send Broadcast Data 520
24.2.6 Send Data 522
24.2.7 Send Multicast Data 524
24.2.8 Start Data Path 526
24.2.9 Stop Data Path 528
24.2.10 Suspend Data Path 529

25 Data Collection Services 531
25.1 Services 531
25.1.1 Data Collected 531
25.1.2 Data Collection Resumed 534
25.1.3 Data Collection Suspended 535
25.1.4 Resume Data Collection 536
25.1.5 Start Data Collection 537
25.1.6 Stop Data Collection 539
25.1.7 Suspend Data Collection 540

26 Voice Services & Events 541
26.1 Services 541
26.1.1 Activate 541
26.1.2 Clear 543
26.1.3 Concatenate Message 544
26.1.4 Deactivate 545

© ISO/IEC 2007 – All rights reserved

Copyright International Organization for Standardization
Provided by IHS under license with ISO
No reproduction or networking permitted without license from IHS
Not for Resale

26.1.5 Delete Message 546
26.1.6 Play Message 547
26.1.7 Query Voice Attribute 549
26.1.8 Queue 554
26.1.9 Record Message 555
26.1.10 Reposition 557
26.1.11 Resume 559
26.1.12 Review 560
26.1.13 Set Voice Attribute 562
26.1.14 Start 565
26.1.15 Stop 567
26.1.16 Suspend 569
26.1.17 Synthesize Message 571
26.2 Events 572
26.2.1 Bookmark Reached 573
26.2.2 Completed 574
26.2.3 DTMF Detected 574
26.2.4 Emptied 575
26.2.5 Interruption Detected 576
26.2.6 Not Recognized 576
26.2.7 Play 577
26.2.8 Recognized 578
26.2.9 Record 579
26.2.10 Review 580
26.2.11 Silence Timeout Expired 580
26.2.12 Speech Detected 581
26.2.13 Started 582
26.2.14 Stop 582
26.2.15 Suspend Play 583
26.2.16 Suspend Record 584
26.2.17 Voice Attribute Changed 585
26.2.18 Voice Error Occurred 587

27 Call Detail Record (CDR) Services 588
27.1 Services 588
27.1.1 Call Detail Records Notification 589
27.1.2 Call Detail Records Report 590
27.1.3 Send Stored Call Detail Records 595
27.1.4 Start Call Detail Records Transmission 596
27.1.5 Stop Call Detail Records Transmission 598

28 Vendor Specific Extensions Services & Events 599
28.1 Registration Services 599
28.1.1 Escape Register 599
28.1.2 Escape Register Abort 600
28.1.3 Escape Register Cancel 601
28.2 Services 603
28.2.1 Escape 603
28.2.2 Private Data Version Selection 604
28.3 Events 605
28.3.1 Private Event 605

Annex A (normative) Device Appearances 607

Annex B (normative) ISDN User-User Information Element Encoding for CSTA 615

Annex C (normative) Capability Bitmap Parameters Types 617

Annex D (informative) Connection State Transition Examples 683

Annex E (informative) Summary of changes in this edition 692

--`,,```,,,,````-`-`,,`,,`,`,,`---

Copyright International Organization for Standardization
Provided by IHS under license with ISO
No reproduction or networking permitted without license from IHS

© ISO/IEC 2007 – All rights reserved

Not for Resale

Foreword

ISO (the International Organization for Standardization) and IEC (the International Electrotechnical Commission) form the specialized system for worldwide standardization. National bodies that are members of ISO or IEC participate in the development of International Standards through technical committees established by the respective organization to deal with particular fields of technical activity. ISO and IEC technical committees collaborate in fields of mutual interest. Other international organizations, governmental and non-governmental, in liaison with ISO and IEC, also take part in the work. In the field of information technology, ISO and IEC have established a joint technical committee, ISO/IEC JTC 1.

International Standards are drafted in accordance with the rules given in the ISO/IEC Directives, Part 2.

The main task of the joint technical committee is to prepare International Standards. Draft International Standards adopted by the joint technical committee are circulated to national bodies for voting. Publication as an International Standard requires approval by at least 75 % of the national bodies casting a vote.

Attention is drawn to the possibility that some of the elements of this document may be the subject of patent rights. ISO and IEC shall not be held responsible for identifying any or all such patent rights.

ISO/IEC 18051 was prepared by Ecma International (as ECMA-269) and was adopted, under a special "fast-track procedure", by Joint Technical Committee ISO/IEC JTC 1, *Information technology*, in parallel with its approval by national bodies of ISO and IEC.

This fourth edition cancels and replaces the third edition (ISO/IEC 18051:2005), which has been technically revised.

© ISO/IEC 2007 – All rights reserved

Copyright International Organization for Standardization
Provided by IHS under license with ISO
No reproduction or networking permitted without license from IHS
Not for Resale

Introduction

This International Standard defines Phase III of Services for Computer Supported Telecommunications Applications (CSTA). This International Standard is part of a suite of Standards and Technical Reports for Phase III of CSTA. All of the Standards and Technical Reports in the suite are based on practical experience of Ecma member companies and each one represents a pragmatic and widely-based consensus.

Phase III of CSTA extends the previous Phase I and Phase II Standards in major theme directions as well as numerous details. This incorporates technology based upon the *versit* CTI Encyclopedia (Version 1.0), which was contributed to Ecma by *versit*.

The 3rd edition of ISO/IEC 18056, XML Protocol for Computer Supported Telecommunications Applications (CSTA) Phase III, specifies a set of XML schemas for this 4th edition of Phase III Services for CSTA.

The 3rd edition of ECMA-348, Web Services Description Language (WSDL) for CSTA Phase III, specifies a set of WSDL schemas for this 4th edition of Phase III Services for CSTA.

© ISO/IEC 2007 – All rights reserved
Copyright International Organization for Standardization
Provided by IHS under license with ISO
No reproduction or networking permitted without license from IHS
Not for Resale

Information technology — Telecommunications and information exchange between systems — Services for Computer Supported Telecommunications Applications (CSTA) Phase III

1 Scope

This International Standard specifies the Services and Event Reports for Computer-Supported Telecommunications Applications, Phase III (CSTA).

This International Standard is focused on providing application service interfaces to a Switching Function, Computing Function and a Special Resource Function. A CSTA application interface is disassociated from the various user-network interfaces and network-network interfaces CSTA applications may serve, observe or manipulate. Because CSTA operates with existing telecommunications interfaces indirectly, it operates generically, so that differences among various existing interfaces are hidden from CSTA applications. Support of user-to-network interfaces is outside the scope of CSTA.

Although most terminal equipment (TE) is suitable for use with CSTA, there will be instances of TE that will not be suitable in certain circumstances. Examples are:

- FAX terminals and modems that are unable to adjust their transmission modes to prevent carrier conflict when both parties are alerted via CSTA during call establishment;
- functional terminals that perform telecommunication functions outside the control of the Switching Function.

Services defined in this International Standard allow functional integration between a computing network and a telecommunications network. Computing platforms (i.e., Application Programming Interfaces - APIs) that support such functionally-integrated applications are outside the scope of this International Standard.

Communication between the computing and switching (i.e., telecommunications) networks may take place via intervening networks ranging from simple point-to-point connections to local- or wide-area telecommunications networks.

This International Standard is part of a suite of CSTA Standards and Technical Reports that provide a comprehensive description of the architectural and practical issues involved in applying, implementing, and utilizing CSTA-based computer telephony integration (CTI) applications.

2 Conformance

This Clause specifies the conformance requirements for a Switching Function, Special Resource Function, and a Computing Function.

Conformance requirements specify the parts of this International Standard that a CSTA conformant implementation shall support.

This International Standard specifies an operational model (Clause 6, “CSTA Operational Model” and Clause 9, “Generic Service Requirements”) that defines a collection of objects (e.g. domains and sub-domains, logical and physical elements, calls) and the relationships between these objects.

The behaviours of CSTA-conformant services, features, and event reports are determined by this model.

2.1 Switching Function

In order to conform to this International Standard a switching function shall support the following as a minimum:

1. the requirements pertaining to CSTA features as specified in Clause 6, “CSTA Operational Model”;
2. the requirements as specified in Clause 9, “Generic Service Requirements”;

© ISO/IEC 2007 – All rights reserved

Copyright International Organization for Standardization
Provided by IHS under license with ISO
No reproduction or networking permitted without license from IHS Not for Resale

3. the Get Switching Function Capability service for all CSTA profiles specified in 2.1.3, “CSTA Profiles” unless otherwise noted in the profile;
4. at least one of the Application Association Establishment sequences, including the mandatory services specified in the sequence, as specified in Clause 7, “Association Establishment”;
5. at least one of the profiles as specified in 2.1.3, “CSTA Profiles”.

2.1.1 Conformant Services

In order to conform to a specific CSTA *service* an implementation shall support the following as a minimum:

1. the requirements of the service as specified by its service description, service request parameters, service response parameters, and operational model including connection state transitions, monitoring event sequences, and functional requirements;
2. the requirements associated with each parameter used in the service as specified by its parameter description, format, and functional requirements in Clause 12, “Parameter Types”;
3. all of the events that are associated with its service completion criteria, as documented in its event monitoring tables;
4. for service requests that contain a device identifier parameter, an implementation shall support, at a minimum, the Diallable Digits format as specified in 10.1.1, “Diallable Digits”.

2.1.2 Conformant Events

In order to conform to a specific CSTA *event* an implementation shall support the following as a minimum:

1. the requirements of the event as specified by its event description, event parameters, event causes, and functional requirements;
2. the requirements associated with each parameter used in the event as specified by its parameter description, format, and functional requirements in Clause 12, “Parameter Types”;
3. for events that contain a device identifier parameter, an implementation shall support, at a minimum, the Switching Function Representation format as specified in 10.1.2, “Switching Function Representation”.

2.1.3 CSTA Profiles

Some CSTA services and events are grouped together as profiles.

2.1.3.1 Basic Telephony Profile

This profile includes the following:

1. CSTA Services: Answer Call, Clear Connection, Make Call, Monitor Start (with the monitorType of device-type), and Monitor Stop.
2. CSTA Events: Connection Cleared, Delivered, Established, Failed, Network Reached, Originated, and Service Initiated.

Other CSTA services and events may be provided in any combination in addition to this set.

2.1.3.2 Routeing Profile

If the switching function supports Routeing Services as specified in Clause 20, “Routeing Services”, it shall support a minimum set of Routeing Services that includes: Route Request, Route Select, and Route End (from the switching function only).

© ISO/IEC 2007 – All rights reserved

Copyright International Organization for Standardization
Provided by IHS under license with ISO
No reproduction or networking permitted without license from IHS
Not for Resale

Other Routeing services may be provided in any combination in addition to this set.

If a switching function supports the routeing for digital data calls, then the Route Register and CSTA Route Register Cancel shall also be included in the minimum set.

2.1.3.3 Level 1a Voice Browser Profile

This profile includes the following:

1. CSTA Services: Answer Call, Clear Connection, Single Step Transfer Call (of a connected call), Monitor Start (with the monitorType of device-type), and Monitor Stop.
2. CSTA Events: Connection Cleared, Delivered, Established, Failed, and Transferred.

Note that the Get Switching Function Capability service is not a required service in this profile.

Other CSTA services and events may be provided in any combination in addition to this set.

2.1.3.4 Level 1b Voice Browser Profile

This profile includes the following:

1. CSTA Services: Answer Call, Clear Connection, Deflect Call (of a connected call), Monitor Start (with the monitorType of device-type), and Monitor Stop.
2. CSTA Events: Connection Cleared, Delivered, Diverted, Established, and Failed.

Note that the Get Switching Function Capability service is not a required service in this profile.

Other CSTA services and events may be provided in any combination in addition to this set.

2.1.3.5 Level 2 Voice Browser Profile

This profile includes the following:

All of the services and events in either the Level 1a Voice Browser Profile or the Level 1b Voice Browser Profile and the following:

1. additional CSTA Service: Make Call.
2. additional CSTA Events: Network Reached, Originated.

Other CSTA services and events may be provided in any combination in addition to this set.

2.1.3.6 Minimal uaCSTA Call Control Profile

This profile includes the following:

1. CSTA Services: Answer Call, Clear Connection, Deflect Call, Hold Call, Make Call, Retrieve Call, and Single Step Transfer.
2. CSTA Events: There are no CSTA events specified as part of this profile. This profile assumes that an application uses mechanisms defined outside of this International Standard (SIP Subscribe/Notify, for example) to obtain call/connection information that can be used in CSTA services rather than using CSTA events to obtain this information.

Note that the Get Switching Function Capability service is not a required service in this profile.

Other CSTA services (and events) may be provided in any combination in addition to this set.

© ISO/IEC 2007 – All rights reserved

Copyright International Organization for Standardization
Provided by IHS under license with ISO
No reproduction or networking permitted without license from IHS
Not for Resale

2.1.3.7 Basic uaCSTA Call Control Profile

This profile includes the following:

1. CSTA Services: Answer Call, Clear Connection, Deflect Call, Hold Call, Make Call, Retrieve Call, Single Step Transfer, Monitor Start (with a monitorType of device-type), and Monitor Stop.
2. CSTA Events: Connection Cleared, Delivered, Diverted, Established, Failed, Held, Network Reached, Retrieved, Service Initiated, and Transferred.

Note that the Get Switching Function Capability service is not a required service in this profile.

Other CSTA services and events may be provided in any combination in addition to this set.

2.1.3.8 Advanced uaCSTA Call Control Profile

This profile includes the following:

1. CSTA Services: Alternate Call, Answer Call, Clear Connection, Consultation Call, Deflect Call, Hold Call, Make Call, Reconnect Call, Retrieve Call, Single Step Transfer, Transfer Call, Monitor Start (with a monitorType of device-type), and Monitor Stop.
2. CSTA Events: Connection Cleared, Delivered, Diverted, Established, Failed, Held, Network Reached, Originated, Retrieved, Service Initiated, and Transferred.

Other CSTA services and events may be provided in any combination in addition to this set.

2.1.3.9 Conferencing uaCSTA Call Control Profile

This profile includes the following:

1. CSTA Services: The CSTA services in this profile must include all of the services in either the Basic or the Advanced uaCSTA Call Control Profile plus the Conference Call service and the Single Step Conference service.
2. CSTA Events: The CSTA events in this profile must include all of the events in either the Basic or the Advanced uaCSTA Call Control Profile plus the Conferenced event.

Other CSTA services and events may be provided in any combination in addition to this set.

2.1.3.10 Basic uaCSTA Device Feature Profile

This profile includes the following:

1. CSTA Services: The CSTA services in this profile must include all of the services in either the Basic or the Advanced uaCSTA Call Control Profile plus the Set Do Not Disturb service and the Set Forwarding service.
2. CSTA Events: The CSTA events in this profile must include all of the events in either the Basic or the Advanced uaCSTA Call Control Profile plus the Do Not Disturb event and the Forwarding event.

Other CSTA services and events may be provided in any combination in addition to this set.

2.1.3.11 Speaker uaCSTA Device Feature Profile

This profile includes the following:

1. CSTA Services: The CSTA services in this profile must include all of the services in either the Basic or the Advanced uaCSTA Call Control Profile plus the Set Speaker Mute and Set Speaker Volume services.

© ISO/IEC 2007 – All rights reserved

Copyright International Organization for Standardization
Provided by IHS under license with ISO
No reproduction or networking permitted without license from IHS
Not for Resale

2. CSTA Events: The CSTA events in this profile must include all of the events in either the Basic or the Advanced uaCSTA Call Control Profile plus the Speaker Mute and Speaker Volume events.

Other CSTA services and events may be provided in any combination in addition to this set.

2.1.3.12 Basic Speech Service Profile

The Basic Speech Service Profile involves primarily the Listener and Prompt resources and includes the following services and events:

1. Services and Events from one or more of the following profiles:
   a. Basic Telephony Profile;
   b. Level 1a or 1b Voice Browser Profile;
   c. Level 2 Voice Browser Profile;
   d. Minimal uaCSTA Call Control Profile;
   e. Basic uaCSTA Call Control Profile.
2. CSTA Services: Clear, Monitor Start (device type monitoring), Monitor Stop, Query Voice Attribute, Set Voice Attribute, Start, Stop.
3. CSTA Events: Bookmark Reached, Completed, Interruption Detected, Not Recognized, Recognized, Silence Timeout Expired, Speech Detected, Voice Error Occurred.

Other CSTA services and events may be provided in any combination in addition to this set.

2.1.3.13 Advanced Speech Service Profile

The Advanced Speech Service Profile includes all the resources, services and events in the Basic Speech Service Profile with additional Prompt Queue and DTMF resources and the following services and events:

1. CSTA Services: Activate, Deactivate, Queue, Reposition, Resume, Suspend.
2. CSTA Events: DTMF Detected, Emptied, Started, Voice Attribute Changed.

Other services and events may be provided in any combination in addition to this set.

2.1.4 Support of Service Requests And Manual Mode

A conformant switching function may support a given service defined in this International Standard through the CSTA service boundary but is not required to support the equivalent service in a manual mode.

A conformant switching function may support a feature associated with an equivalent CSTA service defined in this International Standard through manual mode but is not required to support the equivalent service through the service boundary.

2.2 Special Resource Function Conformance

In order to conform to this International Standard a special resource function shall support the following as a minimum:

1. the requirements pertaining to CSTA features as specified in Clause 6, “CSTA Operational Model”;
2. the requirements as specified in Clause 9, “Generic Service Requirements”;
3. for a supported service, the special resource function shall not reject as unsupported all of the events specified in the monitoring event sequences associated with the service;
4. the atomic service request acknowledgment model as specified in 9.2, “Service Response (Acknowledgements)”.

© ISO/IEC 2007 – All rights reserved

Copyright International Organization for Standardization
Provided by IHS under license with ISO
No reproduction or networking permitted without license from IHS Not for Resale

2.2.1 Conformant Services

In order to conform to a specific CSTA *service* an implementation shall support the following as a minimum:

1. the requirements of the service as specified by its service description, service request parameters, service response parameters, and operational model including connection state transitions, monitoring event sequences, and functional requirements;
2. the requirements associated with each parameter used in the service as specified by its parameter description, format, and functional requirements in Clause 12, “Parameter Types”;
3. all of the events that are associated with its service completion criteria, as documented in its event monitoring tables.

2.2.2 Conformant Events

In order to conform to a specific CSTA *event* an implementation shall support the following as a minimum:

1. the requirements of the event as specified by its event description, event parameters, event causes, and functional requirements;
2. the requirements associated with each parameter used in the event as specified by its parameter description, format, and functional requirements in Clause 12, “Parameter Types”.

2.2.3 Support of Service Requests And Manual Mode

A conformant special resource function may support a given service defined in this International Standard through the CSTA service boundary but is not required to support the equivalent service in a manual mode.

A conformant special resource function may support a feature associated with an equivalent CSTA service defined in this International Standard through manual mode but is not required to support the equivalent service through the service boundary.

2.3 Computing Function Conformance

In order to conform to this International Standard a computing function shall support the following as a minimum:

1. the requirements pertaining to CSTA features as specified in Clause 6, “CSTA Operational Model”;
2. the requirements as specified in Clause 9, “Generic Service Requirements”;
3. for a supported service, the computing function shall not reject as unsupported all of the events specified in the monitoring event sequences associated with the service;
4. the “Single Physical and Logical Element” and “Logical Element Only” device configurations as specified in 6.1.1.3, “Device Configurations”;
5. for service requests, the Diallable Digits format of Device Identifiers as specified in 10.1.1, “Diallable Digits”;
6. for events, all formats of Device Identifiers as specified in 10.1, “Device Identifier Formats”;
7. the “No Appearance Addressability” and the “Individual Appearance Addressability” of referencing device elements as specified in 6.1.5, “Referencing Devices, Elements, Appearances and Device Configurations”;
8. both types of service request acknowledgment models (e.g., Atomic and Multi-Step) as specified in 9.2, “Service Response (Acknowledgements)”;
9. all failure models as specified in 6.7.2, “Connection Failure”;

© ISO/IEC 2007 – All rights reserved

Copyright International Organization for Standardization
Provided by IHS under license with ISO
No reproduction or networking permitted without license from IHS
Not for Resale

10. both switching function options of handling unsupported parameters in service requests as specified in the capability exchange services;
11. both the fixed and local view of the primaryOldCall and the secondaryOldCall parameters in the Conferenced and the Transferred events;
12. all bi-directional services for which it registered, whether explicitly (i.e., via a service registration service such as System Status Register) or implicitly (i.e., the switching function does not support registration but does support (as indicated through the capabilities exchange services) a particular bi-directional service and therefore may issue a service request to the computing function);
13. at least one of the Application Association Establishment sequences, including the mandatory services specified in the sequence, as specified in Clause 7, “Association Establishment”. Note that, in order to interwork with all Switching Functions, the Computing Function should support all of the Application Association Establishment sequences.

3 References

ISO/IEC 8649:1996	Information technology - Open Systems Interconnection - Service definition for the Association Control Service Element (this corresponds to ITU-T Rec. X.217 1995)
ISO/IEC 8824-1:2002	Information technology - Abstract Syntax Notation One (ASN.1): Specification of basic notation
ISO/IEC 11571:1998	Information technology - Telecommunications and information exchange between systems - Private Integrated Services Networks - Addressing
ISO/IEC 11572:2000	Information technology - Telecommunications and information exchange between systems - Private Integrated Services Network - Circuit mode bearer services - Inter-exchange signalling procedures and protocol
ISO/IEC 11582:2002	Information technology - Telecommunications and information exchange between systems - Private Integrated Services Network - Generic functional protocol for the support of supplementary services - Inter-exchange signalling procedures and protocol
ISO/IEC TR 18053:2000	Information technology - Telecommunications and information exchange between systems - Glossary of definitions and terminology for Computer Supported Telecommunications Applications (CSTA) Phase III
ISO/IEC 22534:2005	Information technology - Telecommunications and information exchange between systems - Application session services
ITU-T Rec. E.131:1988	Subscriber control procedures for supplementary telephone services
ITU-T Rec. E.164:2005	The international public telecommunication numbering plan
ITU-T Rec. H.225.0:2006	Call signalling protocols and media stream packetization for packet-based multimedia communication systems
ITU-T Rec. Q.2931:1995	B-ISDN - Digital subscriber signalling system No. 2 (DSS 2) - User-network interface (UNI) layer 3 specification for basic call/connection control
ITU-T Rec. Q.931:1998	ISDN user-network interface layer 3 specification for basic call control
IETF RFC 3066	Tags for the Identification of Languages (January 2001)
IETF RFC 3261	SIP: Session Initiation Protocol (June 2002)

© ISO/IEC 2007 – All rights reserved

--`,,```,,,,````-`-`,,`,,`,`,,`---
Copyright International Organization for Standardization
Provided by IHS under license with ISO
No reproduction or networking permitted without license from IHS
Not for Resale

4 Definitions and Abbreviations

The definitions and abbreviations given in ISO/IEC TR 18053 apply.

5 Functional Architecture

The objective of CSTA Architecture is to define the inter working mechanisms between the Computing, Special Resource, and the Switching Functions independently from their physical implementations.

6 CSTA Operational Model

The CSTA domain contains Switching, Computing and Special Resource Domains separated by the CSTA Service Boundary.

The CSTA domain concept is illustrated in Figure 6-1. It shows that the Switching and Computing Domains comprise Computing Functions (1, 2 and 3) and Switching Functions (1, 2 and 3) respectively.

Each Function[1)] provides access to the objects in its sub-domain. An application acts upon the objects in the domain via the Functions over the CSTA Service Boundary.

This Standard specifies the messages (Services and Event Reports), and their associated behaviour, over the CSTA Service Boundary. These messages originate and terminate at the Functions.

CSTA applications operate in the context of a relationship between two or more Functions over the CSTA Service Boundary. In Figure 6-1, such relationships are shown as lines between Computing Functions and Switching Functions. Association establishment specified in Clause 7, “Association Establishment”, on page 85, explains the different ways to manage such relationships.

A Sub-Domain may include objects such as CSTA calls, devices, connections and messages. A Sub-Domain may have one or more Functions.

The Function provides an abstract view of the part of a Sub-Domain that an application can control and/or observe, called the Application Working Domain.

One Function may provide different Application Working Domains based on considerations such as the application's design, licensing policy, security constraints, etc. These considerations and the associated administration are outside the scope of this Standard.

1) Special Resource Functions (SRFs) are functions that are typically "added-on" to a Switching or Computing Function. They can be modeled as part of either one of the two other Functions or as something totally independent.

--`,,```,,,,````-`-`,,`,,`,`,,`---

© ISO/IEC 2007 – All rights reserved

Copyright International Organization for Standardization
Provided by IHS under license with ISO
No reproduction or networking permitted without license from IHS
Not for Resale

Figure 6-1 CSTA Operational Model

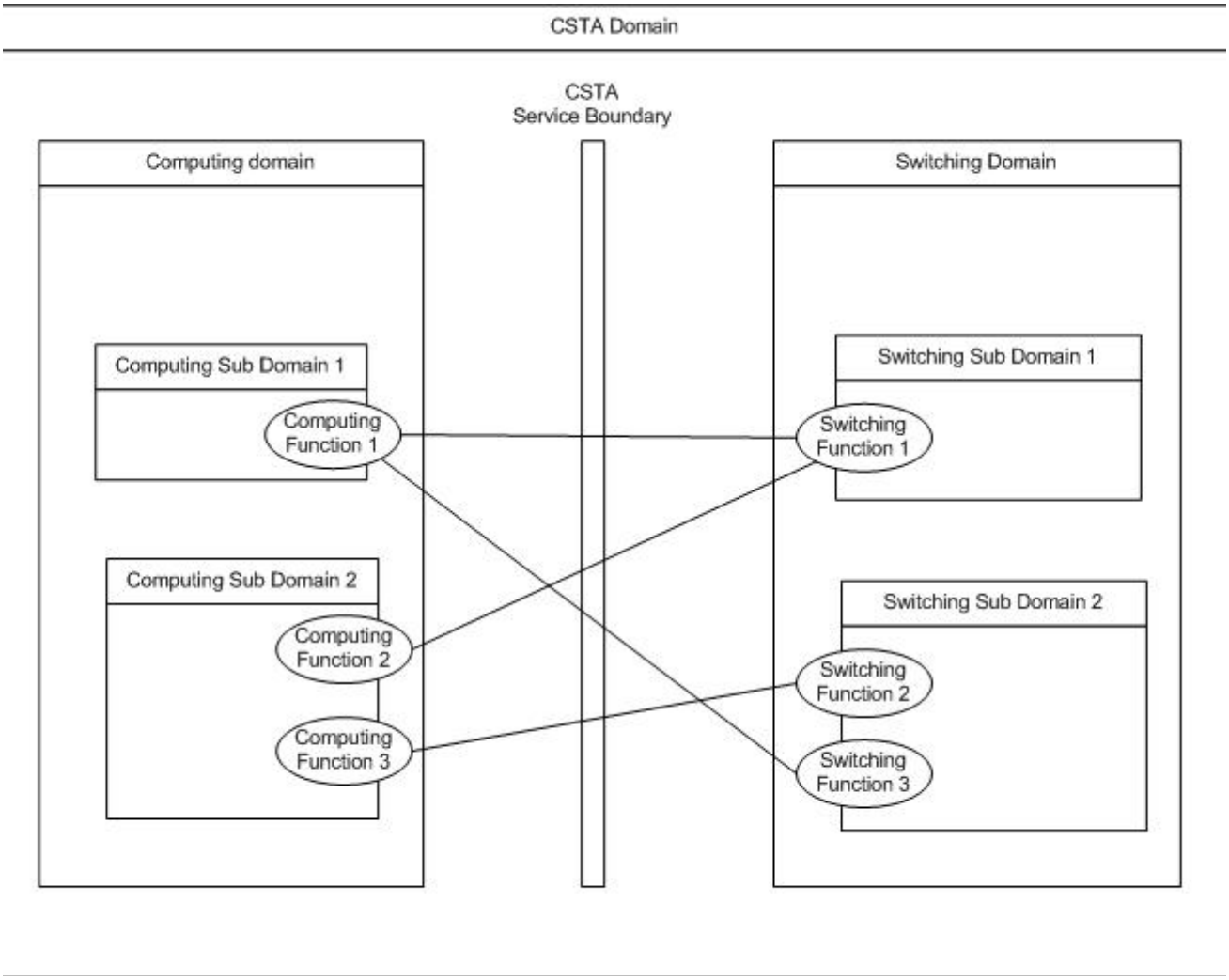

6.1 Switching Sub-Domain Model

The Switching Sub-Domain includes objects such as CSTA calls, devices and connections. A Switching Sub-Domain may have one or more Switching Functions.

The Switching Function provides an abstract view of the part of a switching sub-domain that an application can control and/or observe, called the Application Working Domain.

One Switching Function may provide different Application Working Domains based on considerations such as the application's design, licensing policy, security constraints, etc., and is under administration of the Switching Sub-Domain.

6.1.1 Device

CSTA enables manipulation and observation of devices that allow users to access telecommunications services.

NOTE It is not claimed that this International Standard alone supports ISDN (or any other) devices because, for example, of the additional information required to support such devices in PISNs. CSTA only provides a facility for passing ISDN (or other) specific information to allow, for example, a selection among ISDN devices sharing the same directory number (bearer capability, subaddress, etc.). Another example, that applies generally to telecommunications networks (including ISDN and OSI), is specifying the originator for a call that is established via CSTA. With the current signalling

--`,,```,,,,````-`-`,,`,,`,`,,`---

© ISO/IEC 2007 – All rights reserved

Copyright International Organization for Standardization
Provided by IHS under license with ISO
No reproduction or networking permitted without license from IHS
Not for Resale

support, each party in a call can act only as a called party because the “network” is acting to originate the call. This situation has implications for both the network-to-terminal signalling and any application-level signalling that is significant to the calling party (e.g., issuing A_Associate).
Devices that are visible or controllable via CSTA are known as *CSTA Devices*.

CSTA Devices can be either physical devices (such as buttons, lines, trunks, and stations) or logical devices (such as groups of devices, pilot numbers, and automatic call distribution groups). CSTA Devices have attributes that allow CSTA to monitor and manipulate them. The attributes of any CSTA Device shall be:

1. **Device Type** - differing types of CSTA Device can be used for various purposes and can be manipulated and observed differently within CSTA. CSTA Device Types are listed and defined in 6.1.1.4, “Device Categories”.
2. **Media Characteristics** - CSTA devices have distinct capabilities and characteristics defined by their media features. CSTA represents these characteristics by the following attributes.
    - **Media Class:** A CSTA Device shall belong to at least one and may belong to more than one media class. The Media Class can be used in Call Control services to help select a device for a call or it can be used in call control events to report the media class associated with the call. The following media classes are defined in CSTA:
        - **Audio** - 3.1 KHz audio. Devices in this class are used to make audio calls excluding speech calls. It includes G3 FAX and facsimile machines.
        - **Data** - Devices in this class are used to make digital data calls (both circuit switched and packet switched). This class includes digital computer interfaces and G4 facsimile machines.
        - **Image** - Devices in this class are used to make digital data calls involving imaging, or high-speed, circuit-switched data in general. This class includes digital video telephones and CODECs.
        - **Voice** - Devices in this class are used to make speech calls. This class includes standard telephones.
        - **Chat** - Devices in this class support calls involving text-based messages that are exchanged between other devices in the call.
        - **Email** - Devices in this class can support receiving calls associated with electronic mail systems (i.e. a CSTA Call that represents an Email).
        - **Message** - Devices in this class support receiving and displaying messages such as Instant Messages (IM), Short Message Service (SMS), and Multi-Media Service (MMS) messages. The specific type is not provided.
        - **IM** (Instant Message) - Devices in this class support calls involving a text message. This is a non-interactive call (i.e. only one device involved with the call at one time). This is a specific type of Message media class associated with Instant Messaging systems.
        - **SMS** (Short Message Service) - Devices in this class support calls involving a text message. This is a non-interactive call (i.e. only one device involved with the call at one time). This is a specific type of Message media class associated with Short Message Services systems.
        - **MMS** (Multi-Media Message Service) - Devices in this class support calls involving a multi media text message. This is a non-interactive call (i.e. only one device involved with the call at one time). This is a specific type of Message media class associated with Multi-Media Message Services systems.
        - **Other** - A class comprising devices not in one of the above classes.
    - **Media Stream Information**: The media stream associated with a CSTA Device has attributes such as **Connection Rate**, **Bit Rate**, and **Delay Tolerance**. This information can be used in CSTA

© ISO/IEC 2007 – All rights reserved

Copyright International Organization for Standardization
Provided by IHS under license with ISO
No reproduction or networking permitted without license from IHS
Not for Resale

services to help select the media stream information for a call or to report the media stream information associated with an existing call.

- **Protocol Specific Information**: Many protocols provide additional information beyond what is standardized in CSTA to help distinguish devices. CSTA provides a mechanism where protocol specific information can be passed in CSTA messages to help select a specific device for a call or to provide additional information about the protocol specific information associated with the call. This information consists of:
  - The type of call control information elements (e.g. ISDN, SIP).
  - A character string that contains the protocol specific information elements. For example, in ISDN, the information may include Bearer Capability, Subaddress (for both calling and called devices), High Layer compatibility, and Low Layer compatibility as defined in ECMA-143. In another example when SIP protocols are used, the information may include the SIP header information as defined in IETF RFC 3261.

  Refer to 12.2.18, “MediaCallCharacteristics”, for a description of the Media Characteristics that are used in Call Control services to select devices for a call and in Call Control events to report the media Characteristics associated with the devices involved with the call.

3. **CSTA Device Identifier** - Each device that can be observed and/or manipulated shall be referenced across the CSTA Service Boundary. To accomplish this, each device shall be identified using a Device Identifier.
   - Throughout this standard, the term *Device Identifier* shall always mean CSTA *Device Identifier*.
   - Device Identifiers may be static or, only when used in the context of a connection identifier, dynamically-assigned.
   - A static Device Identifier shall be stable over time. It shall remain constant and unique between calls, associations and within both the switching and computing functions. An example of a static Device Identifier is an ITU-T Rec. E.164 Directory Number.
   - It may be useful for the Switching Function to convert a Device Identifier to another static form for use in service interactions. An example, it might be useful to transform a Public Directory Number into a Private Directory Number. This transformation allows service interactions to be independent of the identification mechanism and allows reduction in the amount of data exchanged. This shortened form of Device Identifier is known as a CSTA Short Form Device Identifier.
   - A static Device Identifier may be used in conjunction with “MediaCallCharacteristics”, as specified in 12.2.18, “MediaCallCharacteristics”, on page 130, in order to distinguish among CSTA Devices that share a Device Identifier.
   - A dynamically-assigned Device Identifier is temporary (lasting for the duration of a call) and may be created at any appropriate time. Once a CSTA Device has been included in a call, it may be desirable to continue to refer to the particular instance of the CSTA Device associated with this call for manipulation or tracking. A static Device Identifier may not always be sufficient because it may not be available or because it is too long and cumbersome for efficient use. In these cases the Switching Function can dynamically assign a Device Identifier as a device reference or handle for the duration of the call. Management of the dynamically-assigned Device Identifier is discussed in 6.1.6.
   - The **Device Identifier Status** indicates if an actual Device Identifier is being provided in a parameter or the reason why it is not being provided. The set of possible values for the Device Identifier Status is:
     - *Provided* - A Device Identifier is present.
     - *Not Known* - Indicates that the switching function cannot provide the Device Identifier but knows that the device exists.

© ISO/IEC 2007 – All rights reserved

Copyright International Organization for Standardization
Provided by IHS under license with ISO
No reproduction or networking permitted without license from IHS
Not for Resale

- *Not Required* - Indicates that the device is not relevant in this case.
- *Not Specified* - Indicates that the device cannot be specified.
- *Restricted* - Indicates that the device cannot be specified due to regulatory and/or privacy reasons.

- The parameter type associated with a particular Device Identifier determines how it is interpreted, restrictions on its use, and the Device Identifier Statuses that are applicable. These parameter types (AssociatedCalledDeviceID, AssociatedCallingDeviceID, CallingDeviceID, CalledDeviceID, DeviceID, RedirectionDeviceID, and SubjectDeviceID) are specified in 12.3, “Identifier Parameter Types”, on page 137.
- The format of a Device Identifier is specified in Clause 10, “CSTA Device Identifier Formats”.

4. **Device State** - A CSTA Device itself does not have a state or status directly associated with it. The elements, components and calls associated with the CSTA Device do have states and statuses associated with them. The following is the list of these states and statuses associated with a CSTA Device:

   - A connection state is the state of a CSTA Device’s logical element’s connection into a call. This state is associated with Call Control features/services. For more information on connection states, refer to Clause 6.1.3, “Connection”, beginning on page 49.
   - The status of the physical components associated with a physical element of a CSTA Device. (e.g., the hookswitch status). For more information, refer to Clause 21, “Physical Device Features”, beginning on page 414.
   - The status of the logical device features/services associated with a logical element of a CSTA Device. (e.g., the forwarding and do not disturb status). For more information, refer to Clause 22, “Logical Device Features”, beginning on page 460.

5. **Device Elements** - A CSTA Device represents various types of telephony endpoints in a switching sub-domain and allows access to telephony services. A CSTA Device can range from a single endpoint (e.g., station) to a set of associated endpoints that form a group. Each CSTA Device is represented by its attributes (e.g., identifier, state(s), type) as well as its features/services. These attributes/features/services are grouped into two categories which are referred to as *device elements*. A device element encompasses the control and observation of a specific set of CSTA Device attributes/features/services. The device elements are: *physical element* and *logical element*.

   The logical element of a CSTA Device encompasses the set of attributes/features/services (e.g., Make Call, Set Forward) that have any association with the control and observation of a call at a CSTA Device (i.e., connection). The physical element of a CSTA Device encompasses the set of attributes/feature/services that have any association with physical components of the CSTA Device that would potentially make up the user interface of the device.

   All addressable (i.e., has a single identifier) CSTA Devices consist of one of the following device element combinations.

Figure 6-2 Logical Element Only

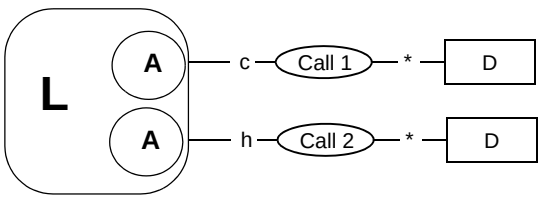

© ISO/IEC 2007 – All rights reserved
Copyright International Organization for Standardization
Provided by IHS under license with ISO
No reproduction or networking permitted without license from IHS
Not for Resale

Figure 6-3 Physical Element Only

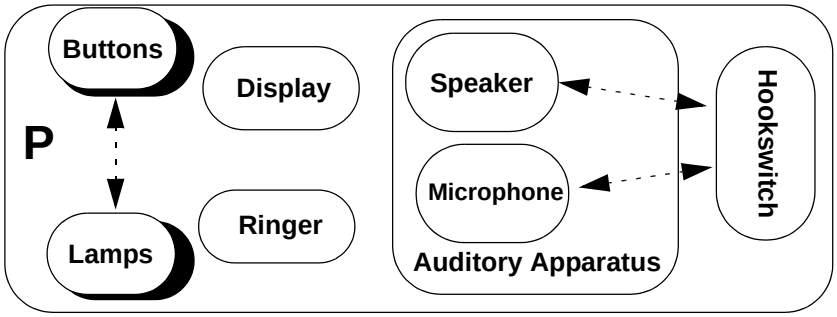

Figure 6-4 A Logical and Physical Element

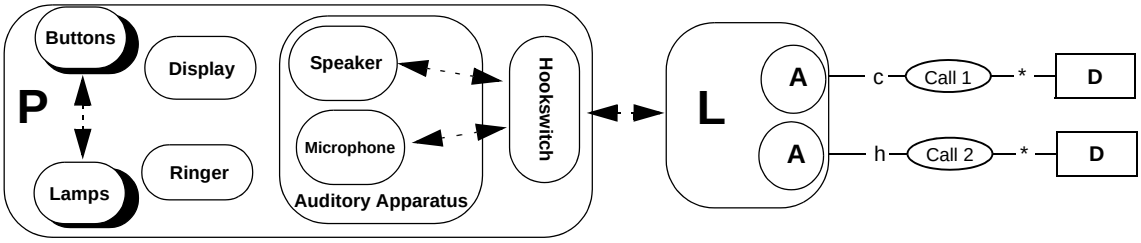

D represents another device

P represents the identifiers for the physical elements

L represents the identifiers for the logical elements

A represents an appearance of a logical element



indicates that there is an interaction and/or association between the elements or components of an element.

For example, a “plain old telephone set” (POTS) consists of a logical and physical element. A computing function learns about the devices, their elements, and their associated attributes\features\services in a switching sub-domain by using the capabilities exchange services (refer to 13.1 beginning on page 149). The following sections describes the device elements and the device attributes/features/services that are associated with the elements in detail.

6.1.1.1 Physical Element

The physical element represents the attributes of the physical components and their associated features/ services that make up the user interface of a device (e.g., the components of a telephone set). A physical component at a CSTA Device can be a piece of hardware or a virtual (e.g., software) representation of a piece of hardware. For example, a set of buttons on a device (i.e., physical components of the device) could be comprised of a piece of hardware with 12 buttons and a switching function software representation of 12 more be tons. As a reselt, the device has a set of 24 buttons associated with its physical element.

The combinations of physical components associated with the physical element are switching function specific. The following features/services are controlled and observed through the physical element:

© ISO/IEC 2007 – All rights reserved

Copyright International Organization for Standardization
Provided by IHS under license with ISO
No reproduction or networking permitted without license from IHS
Not for Resale

- The Physical Device features/services, such as Button Press, Get/Set Hookswitch Status, and Get/Set Speaker Volume.
- The I/O Services such as Start Data Path and Send Data (when applied to the physical element of a device).

Note that these features/services also include the associated events and monitoring of these events.

The physical element of a device is observed and/or controlled within the switching function through an assigned Device Identifier.

Note that if the device is a combination of logical and physical elements, the assigned Device Identifier is the same for both elements.

In order for the physical components to interact or be associated with calls at the device, the device shall have a logical device element (for more details, see 6.1.1.2, “Logical Element”) and/or some association(s) with a logical element(s) from another device(s) (for more details, see 6.1.1.3, “Device Configurations”). The physical components interact with calls through these logical device element(s) but it is device and switching function specific as to how these components actually interact and are associated with the calls.

The following sections describe the physical components that can be associated with the physical element of the device. All physical components shall be controlled and observed in conjunction with the physical element (i.e., associated with the physical element’s Device Identifier).

6.1.1.1.1 Auditory Apparatus

An auditory apparatus is a component which is used to convert electronic signals into voice/speech (i.e., a speaker) and/or convert voice/speech into electronic signals (i.e., a microphone) but at a minimum shall have either a speaker or a microphone. A physical element can have several auditory apparatuses associated with it. Each auditory apparatus can be used independent of each other. An auditory apparatus has several attributes which can be controlled and observed by a computing function. The following are those attributes:

1. *Auditory Apparatus type* - There are several types of auditory apparatuses. Each type representing a different physical configuration and/or function. The following is the list of auditory apparatus types:
    a. *Handset* - An auditory apparatus that is held in a person’s hand and contains a microphone and speaker.
    b. *Headset* - An auditory apparatus that is worn on a person’s head and contains a microphone and speaker.
    c. *Speakerphone* - An auditory apparatus that does not require a person’s body to come into contact with the apparatus and contains a microphone and speaker.
    d. *Speaker-only phone* - A Speakerphone without a microphone.
    e. *Microphone-only*- A type that provides only a microphone.
    f. *Other* - An auditory apparatus that is unique to the given switching function.
2. *Auditory Apparatus Identifier* - Each auditory apparatus that can be observed and/or controlled within the switching function is referenced using an assigned identifier. The auditory apparatus identifiers associated with a given physical element’s Device Identifier are unique.This identifier is used to control and observe all auditory apparatus attributes except the hookswitch which is associated with the apparatus.
3. *Microphone* - The auditory apparatus may or may not have a microphone. If a microphone is present at the auditory apparatus, then there are two features of the microphone that may or may not be controlled (i.e., settable) and observed (i.e., readable).
    a. *Gain* - This is the level at which the microphone is generating the electronic signal. For more details, refer to the definition of the microphoneGainValue parameter in associated services and events.

© ISO/IEC 2007 – All rights reserved

Copyright International Organization for Standardization
Provided by IHS under license with ISO
No reproduction or networking permitted without license from IHS
Not for Resale

b. *Mute* - This is the capability to temporarily disable the microphone. For more details, refer to the definition of the microphoneMute parameter in associated services and events.

Both of these features are controlled and observed using the auditory apparatus identifier.

4. *Speaker* - The auditory apparatus may or may not have a speaker. If a speaker is present at the auditory apparatus, then there are two features of the speaker that may or may not be controlled (i.e., settable) and observed (i.e., readable).

   a. *Volume* - This is the level at which the speaker is boosting the electronic signal when generating the associated voice sound waves. For more details, refer to the definition of the speakerVolumeValue parameter in associated services and events.

   b. *Mute* - This is the capability to temporarily disable the speaker. For more details, refer to the definition of the speakerMute parameter in associated services and events.

   Both of these features are control and observed using the auditory apparatus identifier.

5. *Hookswitch association* - This identifies the particular hookswitch that is used to activate (i.e., put into use) and deactivate (i.e., remove from use) the auditory apparatus. It also indicates, if the particular hookswitch can be controlled (i.e., settable) and observed. For more details on hookswitches, refer to associated services and events.

6.1.1.1.2 Hookswitch

A hookswitch is a component which is used to activate (i.e., put into use or off-hook) or deactivate (i.e., remove from use or on-hook) an auditory apparatus(es). When a hookswitch is off-hook, it enables the auditory apparatus(es) to transmit and receive the electronic signals associated with sound, and when it is on-hook, this capability is disabled. A physical element can have several hookswitches associated with it. Each hookswitch can be used independently of each other. A hookswitch has one attribute which can be controlled and observed by a computing function. This attribute is the hookswitch identifier. This identifier is assigned by the switching function. The hookswitch identifiers associated with a given physical element's Device Identifier are unique. This identifier is used to control and observe the status of the particular hookswitch (i.e., on-hook, off-hook).

6.1.1.1.3 Button

A button is a component which executes a specific feature/service that is assigned to it. The most common implementation of this component, is a piece of hardware that is pressed and released, thereby executing the feature/service assigned to it (e.g., each of the number buttons on a station). However, an implementation can use any component that can produce a similar behaviour. A button can also have the capability of toggling between two settings of a feature/service (e.g., enabling and disabling Do Not Disturb, that is you press the button once, it enables the Do Not Disturb feature/service, and press again, it disables the feature/service). The button can also have the capability of looping through a series of features/services. Almost any feature/service or set of features/services can be assigned to a button, but generally a switching function makes visible buttons only with features/services that are not available through the components/attributes/features/services defined in this Standard. A button can also be used to represent another physical component (e.g., a hookswitch). A physical element can have many buttons associated with it. Each button can be used independently of each other. A button has the following attributes which can be controlled and observed by the computing function:

1. *Button Identifier* - Each button that can be observed and/or controlled within the switching function is referenced using an assigned identifier. The button identifiers associated with a given physical element's Device Identifier are unique. This identifier is used to control and observe all other button attributes.

2. *Button Label* - This is a label by which people interacting with the physical device refer to a given button. This label is a character string which is retained by the switching function. This attribute can also be changed (if supported) by the computing function. The meaning of a Button Label is specific to the users of a particular device and changing it does not change the function of the button.

3. *Button Function* - This is a feature which can be assigned by the switching function to describe the function associated with a given button. The switching function may reassign the functionality of a button

© ISO/IEC 2007 – All rights reserved

Copyright International Organization for Standardization
Provided by IHS under license with ISO
No reproduction or networking permitted without license from IHS Not for Resale

and change this attribute as required (in response to other button presses, for example) but it may not be changed directly by the computing function.

4. *Button Associated Number* - This is a diallable digits format Device Identifier which is associated with the feature/service assigned to the button. This Device Identifier is used by the feature/service when it is executed by the button being pressed. This attribute is optional and only applies to buttons that have some form of associated number. This Device Identifier is initially assigned by the switching function and can be changed (if supported) at any time by either the switching or computing function.
5. *Button Press Indicator* - This indicates if the button can be pressed via the Button Press service.

6.1.1.1.4 Lamp

A lamp is a component that represents (i.e., indicates), for example, the status of, for example, a feature/ service, physical component, logical device element or other CSTA device. The most common implementation of this component is a piece of hardware that emits light. However, an implementation can use any component that can produce a similar behaviour (e.g,. an icon presented on a display). A physical element can have many lamps associated with it. Each lamp can be used independently of each other. A lamp has several attributes which can be controlled and observed by the computing function. The following are those attributes:

1. *Lamp Identifier* - Each lamp that can be observed and/or controlled within the switching function is referenced using an assigned identifier. The lamp identifiers associated with a given physical element's Device Identifier are unique.This identifier is used to control and observe all other lamp attributes.
2. *Lamp Label* - This is a character string which is assigned by the switching function to describe the feature or service's status associated with this lamp. This attribute cannot be changed by the computing function.The meaning of the Lamp Label attribute is switching function specific.
3. *Lamp Mode* - This is the output of the lamp which is used to indicate the status of the (feature/service) or physical component. The output values are represented by the various ways light can be produced from a lamp. This output can be changed at any time by either the switching or computing function. For more details, refer to definition of the lampMode parameter.
4. *Lamp Brightness* - This attribute indicates the visible brightness of the lamp when it is on. This attribute can be changed by the switching function or by the computing function. For more details, refer to the definition of the lampBrightness parameter.
5. *Lamp Color* - This attribute is an additional characteristic of the lamp which helps distinguish it from other lamps. This attribute can only be changed by the switching function. For more details, refer to the definition of the lampColor parameter.
6. *Button Association* - This identifies a button that is associated with the lamp. The lamp can be used to represent either the status of the feature/service associated with the button or to represent the status of the toggle sequence.

6.1.1.1.5 Ringer

A *ringer* is a component associated with the physical element that provides indication that a device is being rung. There may be one or more ringers associated with a device.

A ringer has attributes that can be controlled and observed by a computing function. The following is a list of those attributes:

1. *Ringer Identifier* - Each ringer that can be observed and/or controlled within the switching function is referenced using an assigned identifier. The ringer identifiers associated with a given physical element's Device Identifier are unique. This identifier is used to control and observe all ringer attributes associated with the device.

© ISO/IEC 2007 – All rights reserved

Copyright International Organization for Standardization
Provided by IHS under license with ISO
No reproduction or networking permitted without license from IHS
Not for Resale

2. *Ring Mode* - This attribute describes if the ringer is engaged in a ringing cycle. It will remain *ringing* for the entire ringing cycle (e.g. across consecutive instances of a ringing pattern). Typically only one ringer on a physical element can be rung at one time.
3. *Ring Count* - This attribute describes the number of ring cycles (instances of ring pattern) that the ringer has completed. This attribute is set to 0 immediately before the first ring cycle starts. Note that this is used to query the most recent ring count even after ringing has ceased.
4. *Ring Pattern* - This attribute describes the type of Ring Pattern associated with a ringer. Each individual Ring Pattern cycle may consist of zero or more periods of audible ringing followed by a silent phase. The Ring pattern may be used to help audibly distinguish the types of calls at a device or to uniquely identify a ringer. The meaning of the Ring Pattern is switching function specific.
5. *Ring Volume* - This is the level at which the ringer is set to ring. This information is associated with the ringer until it is reset by the switching function or until it is changed via the Set Ringer Status service.

6.1.1.1.6 Display

A *display* is a component which presents a two dimensional array of characters associated with the physical element. A physical element can have several displays. A display may be real or virtual; that is it may or may not actually be present on the physical device itself. Displays have eight attributes as visualized in Figure 6-5, “Display Attributes”:

1. Display Identifier - To identify a specific display on a physical device.
2. *Logical Rows* - The number of rows on the logical display.
3. *Logical Columns* - The number of columns on the logical display.
4. *Physical Rows* - The number of rows on the physical display. This number is always smaller or equal to *Logical Rows*.
5. *Physical Columns* - The number of columns on the physical display. This number is always smaller or equal to *Logical Columns*.
6. *Physical Base* - The location of the first character of the physical display expressed as (LogicalRowNbr,LogicalColumnNbr) and identified in Figure 6-5 as (**pbr,pbc**). Note that the top-left most position in the logical display is defined as (**0,0**).
7. *Character Set* - Normally ASCII, but may be also be Unicode or a proprietary character set used by the switching function. This attribute is fixed for a given display.
8. *Contents* - A character string which represents the contents of the logical display. Spaces are always present so the size of this string is always the product of the number of logical rows and logical columns. The *contents* can be observed and/or set (if supported) by the computing function. When setting the value of the *Contents*, an offset (starting point in logical display) and a length field (number of characters to be set) shall be given).

The following figure visualizes these attributes further:

© ISO/IEC 2007 – All rights reserved

Copyright International Organization for Standardization
Provided by IHS under license with ISO
No reproduction or networking permitted without license from IHS
Not for Resale

Figure 6-5 Display Attributes

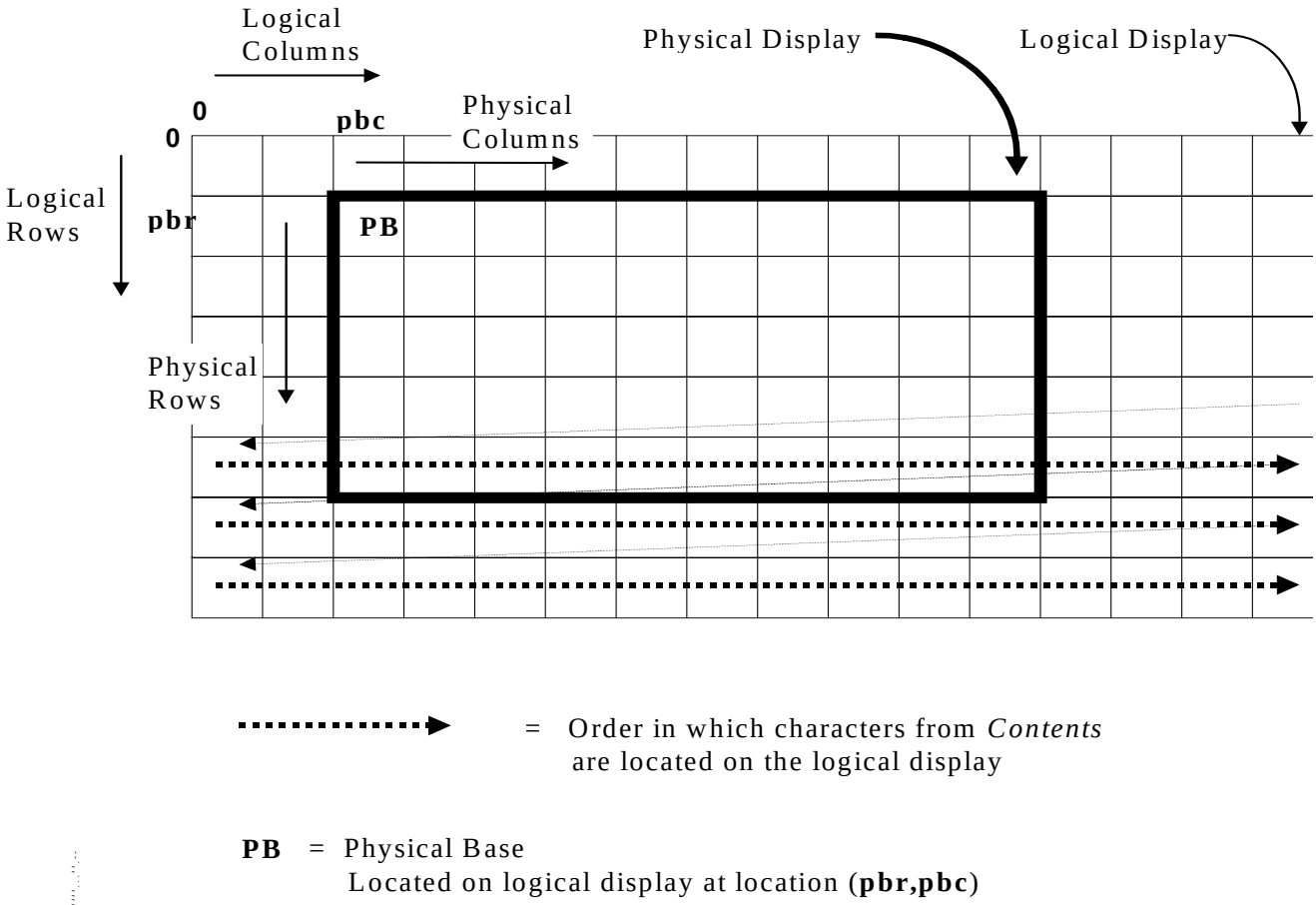

6.1.1.2 Logical Element

A logical element is the part of a device that is used to manage and interact with calls at a device. This element represents the isochronous media stream channels (e.g., ISDN bearer channels) and associated call handling facilities that are used by the device when involved in a call (i.e.,via a connection). If a device also has a physical element, the logical element may interact with the physical element's components in order to convey call information (e.g., via lamps) to the user of the device, to provide/manage the media stream data of the call (e.g., via an auditory apparatus) for the user of the device, and to allow the user of the device to manage the calls (e.g., via buttons). The implementation of this interaction is device and switching function specific. The following are the call and call-related features/services that are controlled and observed through the logical element itself:

- Logical Device features/services which are used to indirectly control calls at the device such as Get/Set Forwarding, Get/Set Do Not Disturb and Get/Set Auto Answer.

Note that these features/services also include the associated events and monitoring of these events.

The logical element of a device is observed and/or controlled within the switching function through an assigned Device Identifier.

Note that if the device is a combination of logical and physical elements, the assigned Device Identifier is the same for both elements.

© ISO/IEC 2007 – All rights reserved

Copyright International Organization for Standardization
Provided by IHS under license with ISO
No reproduction or networking permitted without license from IHS
Not for Resale

The following sections describe the attributes and components of the logical element. These attributes/ component shall be controlled and observed in conjunction with the logical element (i.e., associated with the logical element's Device Identifier).

6.1.1.2.1 Appearance

An appearance is a receptor which is used to connect with at most a single call at the device. A logical element consists of one or more appearances. Appearances are also sometimes called *call appearances*. The number of appearances that a logical element can have is switching function and device specific. Changes in the number of addressable appearances for a logical element are reflected by the capabilities exchange services (13.1 beginning on page 149). Each appearance can be used independently. The following are the call and call-related features/services that are controlled and observed through an appearance for a particular call:

- Call Control features/services such as Make Call, Deflect Call, Answer Call.
- Call Associated features/services such as Associate Data, Generate DTMF, Generate Telephony Tones.
- Routeing Services such as Route Request, Route Select and Route End.
- Media Stream Access such as Attach Media Service, and Detach Media Service.
- I/O Services such as Start Data Path and Send Data (when applied to logical elements of a device.)

Note that these features/services also include the associated events and monitoring of these events.

An appearance has several attributes. The following are those attributes:

1. *Addressability* - The addressability of an appearance refers to whether or not the switching function is explicitly representing the appearance to the computing function.
    a. *Addressable* - An appearance is addressable if it can be explicitly referenced by the computing function at any time with or without the involvement in a call, through a CSTA static device identifier. Refer to Clause 10, "CSTA Device Identifier Formats" for a description of how addressable appearances are referenced.
    b. *Non-addressable* - An appearance is non-addressable if it can only be referenced, when it is involved with a call, through a CSTA connection identifier. In this case, the logical element dynamically creates and destroys appearances based on the call activity, call capabilities, and features/services of the device. Once the appearance is created (i.e., associated with a call), the corresponding Connection Identifier shall be used to control and observe the appearance. For example, when a call is presented to the device, the logical element creates an appearance to handle the call.
2. *Appearance Type* - The type of appearance is based on its relationship with other devices. The type of appearance determines the functionality and behaviour associated with the logical element of the device. There are two types of appearances: Standard and Bridged Appearances.

Refer to Annex A for a complete description of the types of appearances and their associated behaviour.

6.1.1.3 Device Configurations

A *device configuration* describes the arrangement of the various elements and appearances that can be directly associated with a given device. Multiple device configurations may be formed from the possible combinations of physical elements, logical elements, and different appearance types.

Device configurations are described in terms of a specific device configuration for a particular device:

1. *Device's element combination* - This indicates whether the device has a physical element only, a logical element only or both a logical and physical element.
2. *Other devices using the physical element* - This indicates the list of devices (i.e., their logical elements) that are using the physical element of the base device.

© ISO/IEC 2007 – All rights reserved

Copyright International Organization for Standardization
Provided by IHS under license with ISO
No reproduction or networking permitted without license from IHS
Not for Resale

3. *Other devices using the logical element* - This indicates the list of devices (i.e., their physical elements) that are using the logical element of the base device.
4. *The logical element's appearance addressability* - This is an attribute of the appearances of the logical element of the base device (if the logical element is present).
5. *The logical element's appearance type* - This is an attribute of the appearances of the logical element of the base device (if the logical element is present).
6. *The number of appearances associated with the logical element* - This is an attribute of the logical element of the base device (if the logical element is present).

As a set, these attributes describe the device configuration for a specific device. The following sections illustrate typical examples of device configurations that can exist in a switching sub-domain.

Note that in the following examples, where physical and logical elements form part of the same device, the application of a suffix number to the identifying letter identifies that they are parts of the same device (e.g. L1, P1 are a single device; L1, P2 are elements from different devices).

6.1.1.3.1 Logical Element Only

This device configuration has only one logical element (e.g., some Park devices). The following identify the attributes of this device configuration:

- *Device's element combination* - logical element only (L1)
- *Other devices using the physical element* - None
- *Other devices using the logical element* - None
- *The logical element's appearance addressability* - Non-addressable
- *The logical element's appearance type* - Selected-standard
- *The number of appearances associated with the logical element* - unlimited (switching function based limits)

Figure 6-6 is a diagram of a logical element only device configuration.

Figure 6-6 Logical Element Only Device Configuration

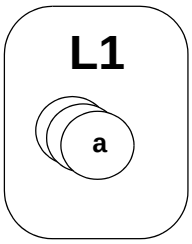

6.1.1.3.2 Single Physical and Logical Element

A *Single Physical and Logical Element* device configuration consists of a single physical element of the device associated with a single logical element of the device that contains non-addressable standard appearances. This device configuration could be used to model a basic telephone station device (e.g., a Plain Old Telephone Service (POTS) telephone or a featured telephone). The following identify the attributes of this device configuration:

- *Device's element combination* - both a logical and physical element (L1/P1)
- *Other devices using the physical element* - None
- *Other devices using the logical element* - None

--`,,```,,,,````-`-`,,`,,`,`,,`---
© ISO/IEC 2007 – All rights reserved
Copyright International Organization for Standardization
Provided by IHS under license with ISO
No reproduction or networking permitted without license from IHS
Not for Resale

- *The logical element's appearance addressability* - Non-addressable
- *The logical element's appearance type* - Selected-standard
- *The number of appearances associated with the logical element* - unlimited (switching function based limits)

Figure 6-7 is a diagram of this device configuration.

Figure 6-7 Single Physical and Logical Element Device Configuration (One Device)

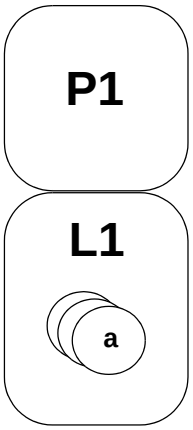

In this figure, the labels "L" and "P" represent the logical and physical elements of the device respectively.

Another variation of the single logical and physical element device configuration involves two different devices - one with a logical element only and one with a physical element only - that are associated with each other. From the perspective of the physical device element P1, the device configuration in this example can be represented as follows:

- *Device's element combination* - physical element only (P1)
- *Other devices using the physical element* - one device (L2)
- *Other devices using the logical element* - None
- *The logical element's appearance addressability* - N/A
- *The logical element's appearance type* - N/A
- *The number of appearances associated with the logical element* - N/A

Figure 6-8 is a diagram of this device configuration.

Figure 6-8 Single Physical and Logical Device Configuration (two devices)

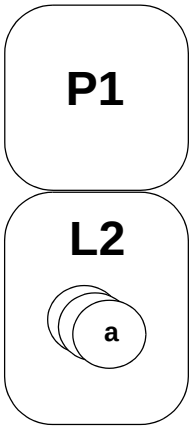

© ISO/IEC 2007 – All rights reserved

Copyright International Organization for Standardization
Provided by IHS under license with ISO
No reproduction or networking permitted without license from IHS
Not for Resale

6.1.1.3.3 Multiple Logical Elements

A *multiple logical elements* device configuration consists of a single physical element associated with multiple logical elements containing standard appearances. A multi-line telephone station could be modeled using this device configuration. The following identify the attributes of this device configuration:

- *Device's element combination* - physical and logical element combination (L1/P1)
- *Other devices using the physical element* - two devices (L2,L3)
- *Other devices using the logical element* - None
- *The logical element's appearance addressability* - non-addressable
- *The logical element's appearance type* - Selected-standard
- *The number of appearances associated with the logical element* - unlimited (switching function based limits)

None of the logical elements in this device configuration need to be part of the same device as the physical element.

Multiple logical elements device configuration represents a single physical element (a telephone set) in a telephone system that supports only one appearance per logical element but has access to multiple calls simultaneously.

Figure 6-9 is a diagram of a multiple logical elements device configuration.

Figure 6-9 Multiple Logical Elements Device Configuration

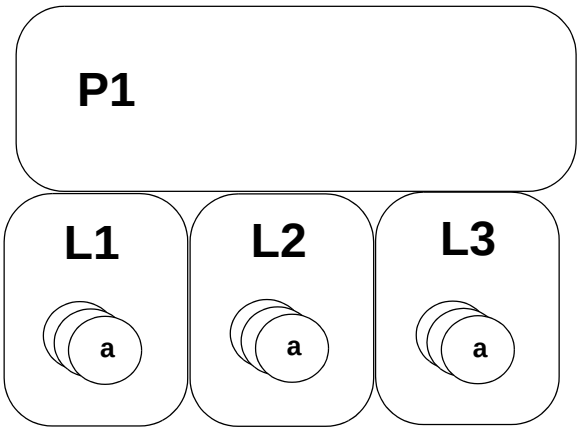

6.1.1.3.4 Multiple Appearance

A *multiple appearance* device configuration consists of single physical element and a single logical element containing two or more addressable appearances. Multiple appearance device configurations are another way to represent a single telephone set that has access to multiple calls simultaneously. This approach could be used in a telephone system that supports addressable standard appearances. This device configuration is sometimes called a *call appearance station*. The following identify the attributes of this device configuration:

- *Device's element combination* - physical and logical element combination (L1/P1)
- *Other devices using the physical element* - None
- *Other devices using the logical element* - None
- *The logical element's appearance addressability* - addressable
- *The logical element's appearance type* - Selected-standard

© ISO/IEC 2007 – All rights reserved

Copyright International Organization for Standardization
Provided by IHS under license with ISO
No reproduction or networking permitted without license from IHS
Not for Resale

- *The number of appearances associated with the logical element* - 3 (A1, A2, A3)

Figure 6-10 is a diagram of a Multiple Appearance Device Configuration.

Figure 6-10 Multiple Appearance Device Configuration

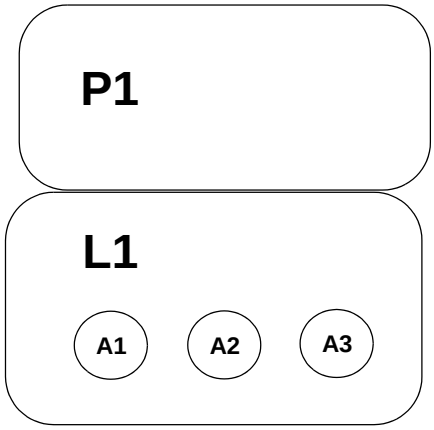

6.1.1.3.5 Bridged

A *bridged* device configuration involves bridged appearances. The characteristics of a bridged device configuration depends upon whether the device configuration is for a physical or logical element.

In the example presented in Figure 6-11, the device configuration shown is for logical element L3 which has bridged appearances. The following identify the attributes of this device configuration:

- *Device's element combination* - logical element only (L3)
- *Other devices using the physical element* - None
- *Other devices using the logical element* - two devices (P1,P2)
- *The logical element's appearance addressability* - addressable
- *The logical element's appearance type* - Independent-shared-bridged
- *The number of appearances associated with the logical element* - 2 (A1 for P1 and A2 for P2)

Figure 6-11 is a diagram of a Bridged Device Configuration.

Figure 6-11 Bridged Device Configuration

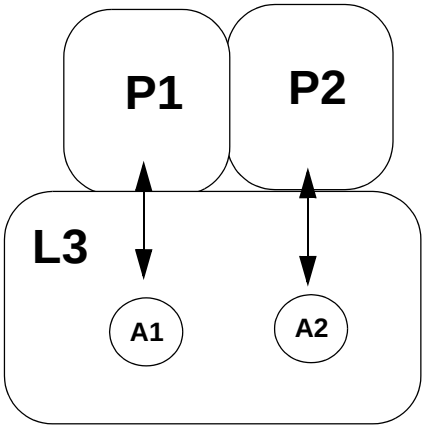

The device configuration for the physical element P1 in this example, is shown in Figure 6-12. In P1's device configuration there are only two device elements rather than three; one is the physical element (P1) and one is

© ISO/IEC 2007 – All rights reserved

Copyright International Organization for Standardization
Provided by IHS under license with ISO
No reproduction or networking permitted without license from IHS
Not for Resale

the logical element which has two addressable bridged appearances. The following identify the attributes of this device configuration:

- *Device's element combination* - physical element only (P1)
- *Other devices using the physical element* - one device (L3 using appearance A1)
- *Other devices using the logical element* - None
- *The logical element's appearance addressability* - N/A
- *The logical element's appearance type* - N/A
- *The number of appearances associated with the logical element* - N/A

Figure 6-12 is a diagram of a Bridged Device Configuration.

Figure 6-12 Bridged Device Configuration

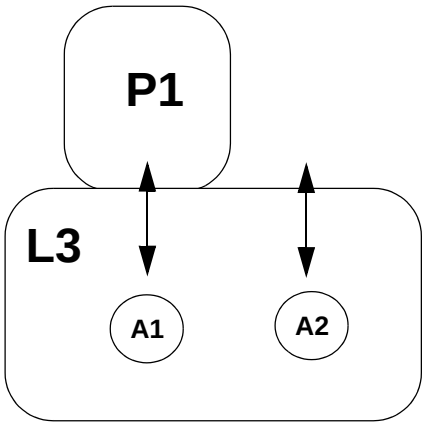

6.1.1.3.6 Hybrid

A physical element associated with multiple logical elements that each have different types of appearances has a *hybrid* device configuration.

An arbitrary example of a hybrid device configuration is shown in Figure 6-13. This example consists of one physical element and three logical elements.

- device 1 has both a physical element (P1) and a logical element (L1) containing two addressable standard appearances
- device 2 has only a logical element (L2) with non-addressable standard appearances
- device 3 has only a logical element (L3) with three addressable bridged appearances

The following identify the attributes of this device configuration:

- *Device's element combination* - logical and physical element (L1/P1)
- *Other devices using the physical element* - two devices (L2, L3 using appearances A1 andA2)
- *Other devices using the logical element* - None
- *The logical element's appearance addressability* - addressable
- *The logical element's appearance type* - Selected-standard
- *The number of appearances associated with the logical element* - 3 (A1, A2, A3)

Figure 6-13 is a diagram of a Hybrid Device Configuration.

© ISO/IEC 2007 – All rights reserved
--`,,```,,,,````-`-`,,`,,`,`,,`---
Copyright International Organization for Standardization
Provided by IHS under license with ISO
No reproduction or networking permitted without license from IHS
Not for Resale

Figure 6-13 Hybrid Device Configuration

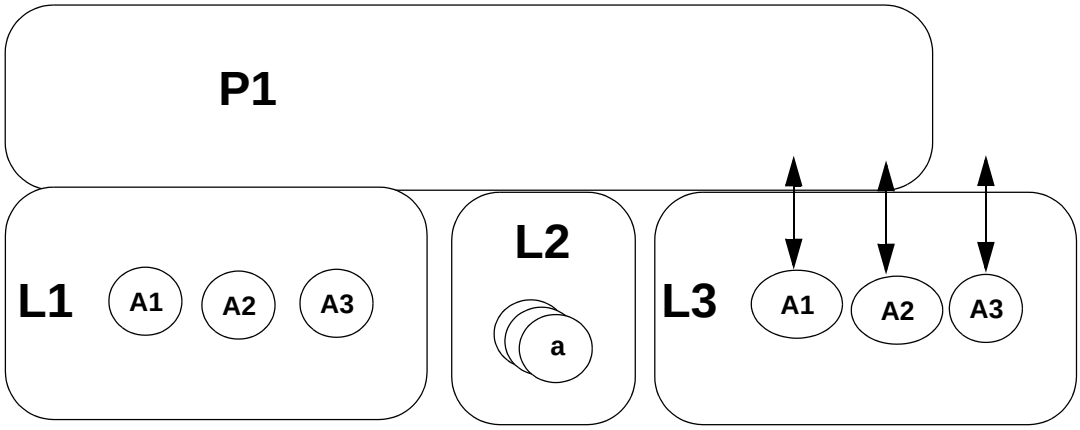

6.1.1.4 Device Categories

The device category of a particular device provides a generic indication of the device's behaviour and configuration. The computing function should use the device category along with other information provided by the capabilities exchange services to model a given device.

6.1.1.4.1 Station Device Category

This category of device can range from a basic "Plain Old Telephone Set" (POTS) device to a very complex feature telephone device. Station devices can be represented by any single device configuration type, or more commonly, as a hybrid of two or more different device configuration types. The physical component, if present, may have any combination of components. The logical element(s) may have any number of appearances appropriate for the type of device configuration.

6.1.1.4.2 Network Interface Device Category

A *Network Interface Device* is a category of device which is within the switching sub-domain and is connected to another telephone network.

A given switching sub-domain is connected to another telephone network(s) (which may or may not be thought of as other switching sub-domains) through one or more Network Interface Devices.

To indicate when a given call involves a Network Interface Device and an external device, the switching function provides a Network Reached event to the computing function specifying what Network Interface device is being used (if known), and what subsequent call-related information is subject to the capabilities of the network being used.

The following are examples which illustrate the use of Network Interface Devices.

In Figure 6-14, the switching sub-domain is centered on a PBX. The Network Interface Devices are distinct devices and are commonly referred to as "trunks."

© ISO/IEC 2007 – All rights reserved

Copyright International Organization for Standardization
Provided by IHS under license with ISO
No reproduction or networking permitted without license from IHS
Not for Resale

Figure 6-14 Trunks As Network Interface Devices

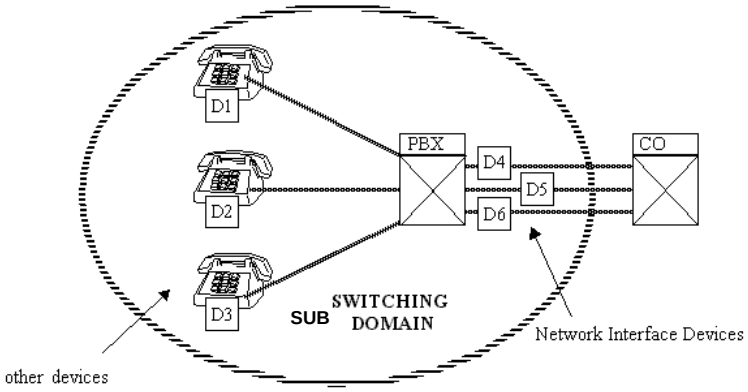

In Figure 6-15, the switching sub-domain is an individual telephone station connected directly to the public telephone network. In this example, the two Network Interface Devices represent two Central Office lines.

Figure 6-15 Central Office Lines As Network Interface Devices

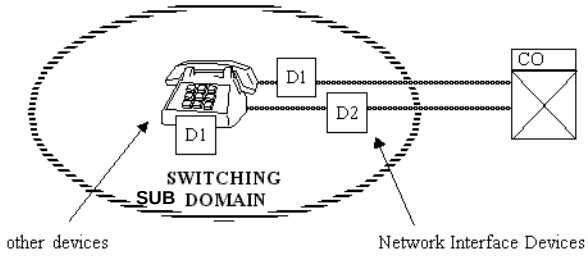

6.1.1.4.3 ACD Device Category

An ACD (Automatic Call Distributor) is a device that distributes calls. An ACD device only consists of the distribution mechanism and may be associated with the devices to which the mechanism distributes calls.

A dynamic process, *Agent Log On* allows an association between an ACD device and a distributed-to device to be created, removed and changed at anytime. Refer to 6.1.1.6, “Agent”, on page 38 for a description of Agent and the Agent Log On Process.

An ACD device is represented as a logical element only device configuration. When a call is presented to an ACD device, a connection in the entering distribution mode of the alerting state is created. Calls that are presented to the ACD device may be queued before they are distributed. The conditions under which the call is queued are switching function specific. Many calls can be simultaneously enqueued, pending their distribution. The ACD device can, for example:

- distribute a call to an agent that had logged on to the ACD device
- distribute a call to an agent that had logged on to an ACD Group
- distribute a call to another ACD device (as well as any other type of internal or external device)
- queue a call to an ACD Group, or to resources that provide message playing, message prompting, voice response interaction, etc.

There are two ACD device models - visible ACD-related devices and non-visible ACD-related devices (note that an ACD device can support one or both models):

- *Visible ACD-Related Devices* - In this model, the ACD device, and the devices (e.g., voice announcement units, devices the call may queue to, other ACD devices, ACD groups, etc.) that can interact with the ACD

© ISO/IEC 2007 – All rights reserved

Copyright International Organization for Standardization
Provided by IHS under license with ISO
No reproduction or networking permitted without license from IHS
Not for Resale

device while the call is being handled by the ACD device, can be monitored/ controlled and are represented uniquely by the switching function with their own connection when associated with a call.

- *Non-Visible ACD-Related Devices* - In this model, the ACD device, and the devices (e.g., voice announcement units, devices the call may queue to, other ACD devices, ACD groups) that can interact with the ACD device while the call is being handled by the ACD device, are represented by the switching function using a single connection at the ACD device. Neither these devices, which interact with the ACD device, nor their connections to calls queued at the ACD device can be monitored or controlled. Note that when a single connection is used in this manner, all relationships between the call and the ACD device are terminated when the call is no longer part of the ACD device (diverted from the device, for example).

6.1.1.4.4 Park Device Category

A *park* device category is a device that is exclusively used by the switching function to park calls on behalf of other devices in the switching sub-domain. These calls, once parked, may be retrieved by a device in the switching sub-domain. The number of calls that can be parked at one of these devices is switching function specific. These devices can be represented by either a single physical and logical elements device configuration or a logical element only device configuration. The visibility of these devices within the switching sub-domain is switching function specific.

Note that calls may be parked at devices other than a Park device.

6.1.1.4.5 Group Device Category

A *group* device models a relationship between CSTA devices that is characterized by the fact that these devices share a common device identifier. This relationship can be permanent or temporary. The group model differs from the bridged appearances model in that the relationship is between devices' logical elements while for bridged appearances the relationship is between a logical element and a physical element.

The group device has a logical element that has relationships with the logical elements of the devices that are members of this group. The group device is referenced by the group device identifier.

A group device may have a distribution mechanism. The distribution mechanism may support queuing. When a group device has a distribution mechanism, the group device identifier represents both the distribution mechanism and the member devices.

Group Device Attributes

The attributes of a group device are (a group device may have more than one of these attributes (e.g., a hunt and pick group device):

- Hunt - The hunt attribute characterizes a group device (also called hunt group) that has the capability to distribute calls to the member devices according to different selection modes (e.g., cyclical, sequential, longest idle time). The association between the group device and the member devices is always fixed by the switching function. A hunt group may have the capability to queue these calls before they are distributed.
- Pick - The pick attribute characterizes a group device (also called pick group) that represents a collection of devices that can be used with the Group Pickup Call service. When a call is delivered to a device in the pick group, other devices in the group can be used to answer the particular call (i.e., picking the call). When the call is picked, it is diverted from the originally delivered device and connected to the device which picked the call. The details associated with the pick group feature are documented in the Group Pickup Call service. Only devices associated with the pick group device can pick a call from the given group unless the pick group device is addressable within the switching sub-domain and the pick group device is configured to allow devices outside the group to pick calls. The addressability of the pick device within the switching sub-domain is switching function specific. If the pick group device is addressable, its Device Identifier can only be used in conjunction with the Group Pickup Call service (i.e. the computing

--`,,```,,,,````-`-`,,`,,`,`,,`---

© ISO/IEC 2007 – All rights reserved

Copyright International Organization for Standardization
Provided by IHS under license with ISO
No reproduction or networking permitted without license from IHS
Not for Resale

function has limited control and can not observe the pick group device). The number of devices that are associated with the pick group device is switching function and device specific. The association between the pick group device and the other devices is not visible within the switching sub-domain (i.e., does not have an explicit representation). The association between the pick group device and the other devices is fixed by the switching function. Changes in the number of devices associated with the pick group device are reflected by the capabilities exchange services.

- ACD - The ACD attribute characterizes a group device (also called an ACD group) that has a distribution mechanism similar to a hunt group. In addition, this group device represents an explicit association between the distribution mechanism (the ACD) and the distributed-to-devices. A dynamic process, *Agent Log On* allows an association between an ACD group and the distributed-to devices to be created, removed and changed at anytime. Refer to 6.1.1.6, “Agent”, on page 38 for a description of Agent and the Agent Log On Process.
- User - The User attribute characterizes a group device whose member devices are associated with a user. The association between the group device and the member devices can be fixed (e.g., through provisioning) or can be dynamic (e.g. SIP registration procedures).
- Agent - The Agent attribute characterizes a group device whose member devices are associated with a user via the log in procedures described in 6.1.1.6, “Agent”, on page 38.
- Other - The Other attribute characterizes a group device whose characteristics are switching function-dependent.

Group Device and Monitoring

Monitoring of a group device in which the group device includes a distribution mechanism may follow either the *group inclusive* or the *group exclusive* model. The switching function may support either model, or both models simultaneously (with individual group devices supporting either the inclusive or exclusive model). The model(s) supported by a switching function is indicated by the Get Switching Function Capabilities service.

In the group inclusive model, the scope of a monitor on the group device includes the distribution mechanism and all member devices. In the group exclusive model, the scope of the monitor on the group device includes only the distribution mechanism.

The events reported to the monitor of a group device are the same as those reported to monitors of the individual member devices, with the following exceptions:

- A single Monitor Start service request is set on the group device identifier.
- The events for the member devices, if they are in the scope of the monitor, are reported with the cross reference identifier of the monitor set on the group device.
- When an incoming call is received, the called device represents the group device and the subject device (e.g., alerting device) represents the member device.

In addition, if the group device supports a distribution mechanism, all events reported for the call when it is present at the distribution mechanism (e.g., queued), are reported with a connection identifier consisting of the call identifier and the group device identifier. When the call leaves the distribution mechanism to be delivered to a member device, a Diverted event is generated.

Some services applied to the group device are applied to all member devices of the group device (e.g., Set Agent State). This capability is indicated by the capabilities exchange services.

Monitoring a User

A user can be represented as a user group device. When a user group device is monitored all members of the user group device are included in the scope of the monitor (group inclusive model).

A device can become a member of the user group device through provisioning or by dynamic association.

© ISO/IEC 2007 – All rights reserved

Copyright International Organization for Standardization
Provided by IHS under license with ISO
No reproduction or networking permitted without license from IHS
Not for Resale

For example a URI may be used to represent a user (in SIP this is called a user's Address of Record (AOR)). CSTA can model this user as a user group device and represent the user's AOR using the CSTA URI deviceID format.

When a device registers with a user (using SIP registration procedures, for example), it becomes associated with the user through the user's AOR. In CSTA, this device becomes a member of monitored user's group device. When the user group device is monitored, call and/or device activity at the device (depending upon the parameters in the Monitor Start service request) are reported through the user group device monitor.

Since there can be multiple (SIP) devices registered for the same user, the user group device can contain multiple members.

The CSTA capability exchange services can be used to obtain the members of the user group device.

6.1.1.4.6 Routeing Device Category

A Routeing Device is a device that assists in the routeing of calls.

Refer to 6.7.8, "Routeing Services" for a description of how a Routeing Device is used with CSTA Routeing services.

6.1.1.4.7 Voice Unit Device Category

A Voice Unit device allows messages consisting of voice stream data to be created, manipulated, played to a Connection, or recorded from a Connection. A Voice Unit device can be observed and controlled using the CSTA Voice services (Clause 26, "Voice Services & Events", on page 541) and a state model as shown in Figure 6-16, "Voice Unit Operational Model". A Voice Unit device could be used to implement a voice mail system.

A Voice Unit device may be implemented either as a device as part of the Switching Sub-Domain or as a device as part of the Special Resource Sub-Domain.

A Connection Identifier is used to indicate the call that the Voice Unit device relates to a message. Typically the Voice Unit device will record some portion of the call or play a message as some portion of a call. There are some Voice services (e.g., Delete Message and Concatenate Message) that deal with the control of messages and do not require an interaction with a call.

A globally unique Message Identifier is used to allow manipulation of messages, many of which survive the life of multiple calls.

A Voice Unit state is a state that a Voice Unit device may take in relating a call with a message. It relates a call to its message in terms of playing, recording, pausing, suspending, changing playback speed, etc. Voice Units may have several states concurrently with respect to different calls and messages. Voice Unit states shall be reported by Voice Event Reports. A typical transition model for Voice Unit states is shown in the following figure.

© ISO/IEC 2007 – All rights reserved`,,,,````-`-`,,`,,`,`,,`---

Copyright International Organization for Standardization
Provided by IHS under license with ISO
No reproduction or networking permitted without license from IHS
Not for Resale

Figure 6-16 Voice Unit Operational Model

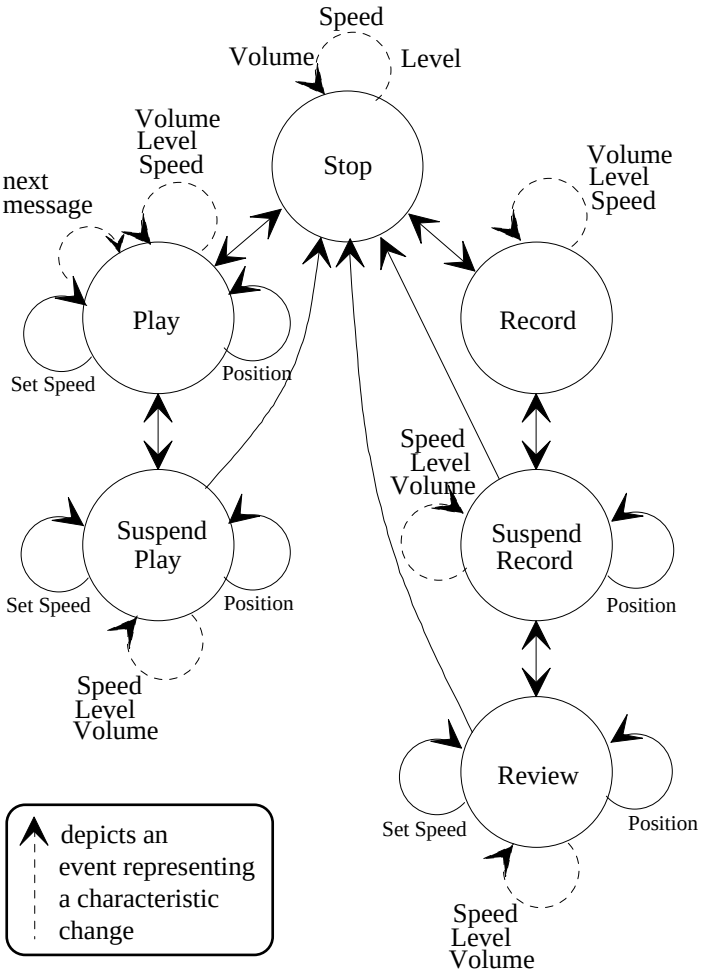

In Figure 6-16, “Voice Unit Operational Model”, the states (circles) presented comprise the CSTA Voice Unit state set. Arrows represent transitions between states and show the typical states that may be entered from a given state. These transitions form the basis for providing Voice Event Reports when they occur. The circular transitions show the effects of the Reposition and Set Speed Services. The following states are defined:

Stop	the state where a call and a message are not currently interacting.
Play	the state where a message delivers its voice stream data to a call.
Suspend Play	the state where a message that was in the Play state is temporarily suspended in its delivery. This state (rather than Stop) is entered when it the message is intended to be continued from its current position.
Record	the state where a message is created from the voice stream data in a call.
Suspend Record	the state where a message that was in the record state is temporarily suspended from recording. This state (rather than Stop) is entered when recording is intended to be continued from its current position.
Review	The state where a message that was in the Suspend Record state delivers recorded voice stream data back to the call. This allows the party who is creating the message to examine the voice stream data recorded so far.

© ISO/IEC 2007 – All rights reserved

Copyright International Organization for Standardization
Provided by IHS under license with ISO
No reproduction or networking permitted without license from IHS
Not for Resale

6.1.1.4.8 Generic Interactive Voice Device Category

Interactive Voice Devices (IVDs) model Speech/DTMF input and speech output processing in CSTA. A Connection identifier is used to indicate the call the IVD is interacting with.

A Device Identifier is used to indicate an Interactive Voice device. Typically, an input IVD captures the voice and converts it into a textual description. The conversion is based on a collection of rules herein called the grammar. Similarly, an output IVD produces voice based on a textual description generated by the Computing Function. An IVD can coordinate the playback of multiple voice outputs.

Interactive Voice Devices are call-wide in that the behaviour of an IVD can be affected by other IVDs connected to the same call. For example, the Computing Function can delegate an input IVD to automatically cut off speech output to facilitate the “barge-in” effect (Clause 6.1.1.4.11, “Prompt Interactive Voice Device Category”, on page 34), and one input IVD can reset or prevent timeout for other input IVDs (Clause 6.1.1.4.9, “Listener Interactive Voice Device Category”, on page 31 and Clause 6.1.1.4.10, “DTMF Interactive Voice Device Category”, on page 33). This Standard specifies the functional requirements of the call-wide behaviour for Interactive Voice Devices.

Because of their interactive nature, interactive voice devices are typically monitored so that events can be delivered to Computing Function in a timely fashion.

Interactive Voice Devices are controlled and observed using the services and events specified in Clause 26, “Voice Services & Events”, on page 541.

A single Interactive Voice Device can contain multiple interactive voice resources that share a single connection. Each of these resources is individually addressable through a resource identifier.

A Generic Interactive Voice Device (or Generic IVD) has one or more resources that are involved with Speech and/or DTMF processing. It may include functionality of a Listener, DTMF, Prompt, Prompt Queue, or a Message Interactive Voice Device. For example Listener and DTMF resources may be combined to form a type of “input” interactive voice device.

A Generic IVD and all other types of IVDs may be implemented either as a device as part of the Switching Sub-Domain or as a device as part of the Special Resource Sub-Domain.

The following sections describe specific types of Interactive Voice Devices specified in this Standard.

6.1.1.4.9 Listener Interactive Voice Device Category

A Listener Interactive Voice Device (or Listener IVD) that has one or more resources that are involved only with processing speech input.

Tasks that can be performed by a Listener IVD include:

- speech recognition: converts speech into a textual transcription. The result is often accompanied by a confidence score that indicates how trustworthy the transcript is.
- utterance verification: validates speech against a given transcription. In the case where the transcription is not provided *a priori*, a speech recognition stage usually precedes the verification process.
- speaker recognition: identify the speech from a speaker database. As in the case of speech recognition, the result is often accompanied by a confidence score. The word sequence of the utterance spoken can be known or unknown to the Computing Function.
- speaker verification: validates whether a speech waveform is indeed produced by a given target. The word sequence of the utterance spoken can be known or unknown.
- speaker enrollment: allows speech recognition to adapt to a speaker's voice, or enroll a speaker's voice signature for verification.

© ISO/IEC 2007 – All rights reserved

Copyright International Organization for Standardization
Provided by IHS under license with ISO
No reproduction or networking permitted without license from IHS
Not for Resale

A Listener IVD may perform one or more tasks listed above and may provide options to capture and return the audio alongside with the textual outcome.

Figure 6-17, “Listener Resource Operational Model” specifies the states and their transitions for a particular Listener resource. The following states are defined:

Null the state in which the call and the Listener resource are not interacting.

Started the state in which the Listener resource is processing audio in the call.

Speech Detected the state in which speech-like sound is detected in the call and the Listener resource has started the process of matching the audio to the grammar.

Figure 6-17 Listener Resource Operational Model

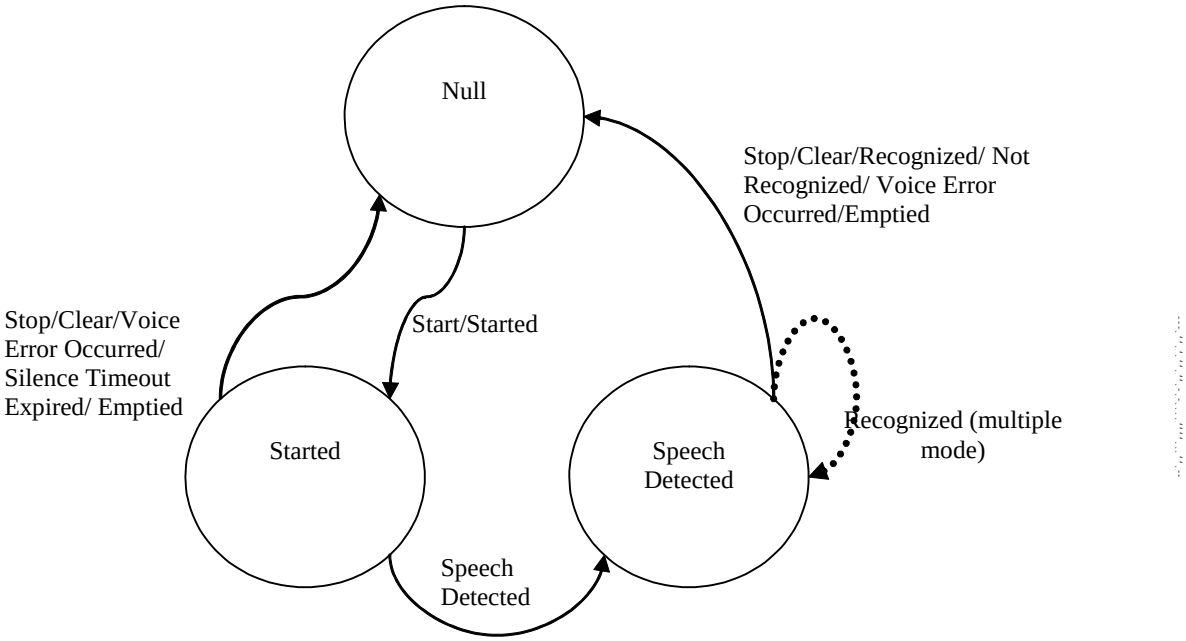

Typically, a Listener resource is brought to a Started state by the Start service (Clause 26.1.14, “Start”, on page 565), after which state transitions may take place automatically. To report progress, each automatic state transition raises a corresponding Voice Event (Clause 26.2, “Events”, on page 572).

A Listener resource can have one of the following three modes:

- automatic, in which a Listener resource will determine automatically whether the speech signal has ended in the call. Typically, the end of speech is characterized by an extended period of silence called End Silence.
- single, in which the Computing Function must utilize Stop or Clear services (Clause 26.1, “Services”, on page 541) to end the audio collection process. This mode mandates the Listener resource to ignore extended silence amidst the audio and produce a single interpretation on the captured audio.
- multiple, in which the Listener resourcemay loop around the Speech Detected state and therefore may produce multiple outcomes. An explicit Voice service request (either Stop or Clear, Clause 26.1, “Services”) must be used to stop or cancel further speech processing.

After leaving the Null state, a Listener resource can encounter one of the following timeout conditions and reset itself back to the Null State:

- Silence timeout: the maximum time allowed before entering the Speech Detected state.

© ISO/IEC 2007 – All rights reserved
Copyright International Organization for Standardization
Provided by IHS under license with ISO
No reproduction or networking permitted without license from IHS
Not for Resale

- Babble timeout: the maximum time allowed to stay in the Speech Detected state.
- Maximum timeout: the maximum time allowed before returning to the Null state.

Multiple Listener IVDs can optionally be conferenced or joined to a single call where they process the same audio stream. One and only one Start service request (Clause 26.1.14, “Start”) directed at any of the Listener resources is needed to bring all of the Listener resources connected to the same call out of the Null State. Subsequent Start service requests issued against a non Null Listener resource has no effect. Once the Listener resource connected to the same call leaves the Null State, individual Listener resources proceed with their own state transitions and, if monitored, raise their own events. Listener resources performing the same task on the same call, however, do compete against one another: the first Listener resource matching the grammar to the utterance will cause all others connected to the same call to abandon their grammar matching processes and make corresponding state transitions based on their modes: while Listener resources of automatic or single modes return to the Null state, the multiple mode Listener resources returns to the Speech Detected state.

When a Listener and a DTMF IVD are conferenced or joined to a single call, they also compete on the same audio. See Clause 6.1.1.4.10, “DTMF Interactive Voice Device Category” for the specification of the operational model.

6.1.1.4.10 DTMF Interactive Voice Device Category

A DTMF Interactive Voice device (or DTMF IVD) has one or more resources that are involved only with interpreting a sequence of DTMF characters based on the grammars. In contrast to the CSTA Data Collection Services, a DTMF resource utilizes grammars to parse the DTMF string rather than just reporting it. For example, a three consecutive DTMF strokes of key “8” may be interpreted as an area code of a telephone number, a transaction amount, or even as a way to enter the letter “V”. The Computing Function may utilize different grammars and cause the DTMF resource to report appropriate results.

As specified in Figure 6-18, “DTMF Resource Operational Model”, a DTMF resource will be in one of the following states:

Null	the state in which the call and the DTMF resource are not interacting.
Started	the state in which the DTMF resource starts processing the audio in the call.
DTMF Detected	the state in which the DTMF character is detected in the call.

© ISO/IEC 2007 – All rights reserved

Copyright International Organization for Standardization
Provided by IHS under license with ISO
No reproduction or networking permitted without license from IHS
Not for Resale

Figure 6-18 DTMF Resource Operational Model

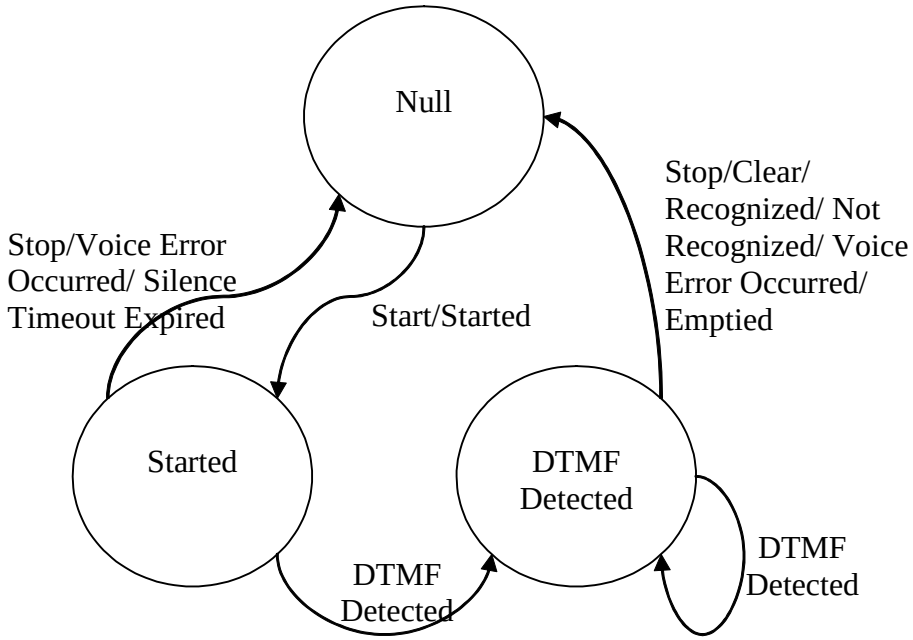

Typically, a DTMF resource is brought to a Started state by the Start service (Clause 26.1.14, “Start”, on page 565), after which state transitions may take place automatically. To report progress, each automatic state transition raises a corresponding Voice Event (Clause 26.2, “Events”, on page 572).

After leaving the Null state, a DTMF resource can encounter one of the following timeout conditions and reset itself back to the Null state while raising a corresponding timeout event:

- Silence timeout: the maximum time allowed before entering the DTMF Detected state.
- Inter-digit timeout: the maximum time allowed before making a transition from the DTMF Detected state unless the last key completes a DTMF sequence that traverse a grammar rule in its entirety. For the latter case, the DTMF resource waits for a period of End Silence and transitions into the Null State if no successive DTMF is detected.

Multiple DTMF IVDs can optionally be conferenced or joined to a single call. At any given time, though, at most one of the resources can be in a non Null state. Any attempt to enter the Started state while another DTMF resource is not at the Null state will result in a Voice Error Occurred event (Clause 26.2.18, “Voice Error Occurred”, on page 587).

Multiple DTMF and Listener IVDs can be conferenced or joined to the same call and enter their respective Started states. In such case, the two types of resources receive the same media stream from the call, and the first resource to leave the Started state will prevent the other from incurring a silence timeout and resetting back to the Null state. However, either type of resource that returns to the Null state will, after raising proper Voice events, cause the other to follow immediately back to its Null state as well. This, for instance, enables the use of DTMF to stop a Listener without Maximum or Babble Timeout.

6.1.1.4.11 Prompt Interactive Voice Device Category

An Prompt Interactive Voice device (or Prompt IVD) has one or more resources that are involved only with producing audio output from a text that describes the output generation process. The audio can be a combination of pre-recorded audio and text to speech synthesis. Prompt playback is facilitated through the Prompt Queue (Clause 6.1.1.4.12, “Prompt Queue Interactive Voice Device Category”, on page 35) IVD that

© ISO/IEC 2007 – All rights reserved

Copyright International Organization for Standardization
Provided by IHS under license with ISO
No reproduction or networking permitted without license from IHS
Not for Resale

manages the playback by storing copies of the voice generated by the Prompt and sends them to the media conduit at a proper time.

The text input to the Prompt resource may contain bookmarks. When the playback reaches the position of a bookmark, the Bookmark Reached event is generated (Clause 26.2.1, “Bookmark Reached”, on page 573). The event can be used as a synchronisation cue to update other user interface related properties such as the cursor on a display, for instance.

Each prompt can be set as auto-interruptible. A DTMF resource or a Listener resource can cause a prompt to be interrupted. When set as auto-interruptible, a caller's “barge-in” on the playback, either through DTMF or speech commands, will automatically cut off the speech output without the intervention of the Computing Function. Whether a prompt is set auto-interruptible or not, the Interruption Detected Event (Clause 26.2.5, “Interruption Detected”, on page 576) will always be reported should there be any input activity during playback and a monitor is placed on the call or the Prompt IVD.

The attributes of a Prompt resource can be controlled by the Set Voice Attributes service (Clause 26.1.13, “Set Voice Attribute”, on page 562). A Prompt resource is not involved with a call and therefore does not have a state model. The CSTA Queue service is used to copy a prompt to a Prompt resource which is attached to a call.

6.1.1.4.12 Prompt Queue Interactive Voice Device Category

Prompt Queue Interactive Voice Device (or Prompt IVD) has one or more resources that are involved only with serializing audio being played back to the call.

A Prompt Queue resource stores the concatenated voices generated by Prompt resources in the order of the Queue services made at individual Prompt resources. A Prompt Queue resource allows the Computing Function to construct phrases by concatenating voices from a collection of prompts. For example, a Computing Function may decide to confirm with the caller on a choice of a city with a sentence “I heard you said Seattle. Is this correct?” While “I heard you said…” and “Is this correct?” can be pre-recorded waveforms, the city name must be dynamically synthesized based on interaction context. Such an explicit confirmation can be achieved by three consecutive Queue Services directed at three Prompt resources: first on the pre-recorded “I heard you said…”, followed by the synthesized city name and the pre-recorded “Is this correct?”.

A Prompt Queue resource conceptually holds one or more subqueues that are delimited by the Start service (Clause 26.1.14, “Start”, on page 565). Figure 6-19, “Operational Model of a subqueue in a Prompt Queue Resource” specifies the life cycle of a subqueue. The following states are specified:

Formed — the state in which a subqueue is initiated by an incoming prompt either when the Prompt Queue resource is empty, or the last subqueue in the Prompt Queue resource has entered the Ready state. All subsequent incoming prompts are appended to this subqueue in the order of arrival.

Ready — the state in which a subqueue is scheduled to be played as soon as its preceding subqueue, if any, is depleted. Any subqueue must enter this state before its contents can be played out to the call.

Playing — the state in which a subqueue has reached to the front of the Prompt Queue resource and its constituent prompts are being played in sequence.

Null — an empty subqueue.

© ISO/IEC 2007 – All rights reserved

Copyright International Organization for Standardization
Provided by IHS under license with ISO
No reproduction or networking permitted without license from IHS
Not for Resale

Figure 6-19 Operational Model of a subqueue in a Prompt Queue Resource

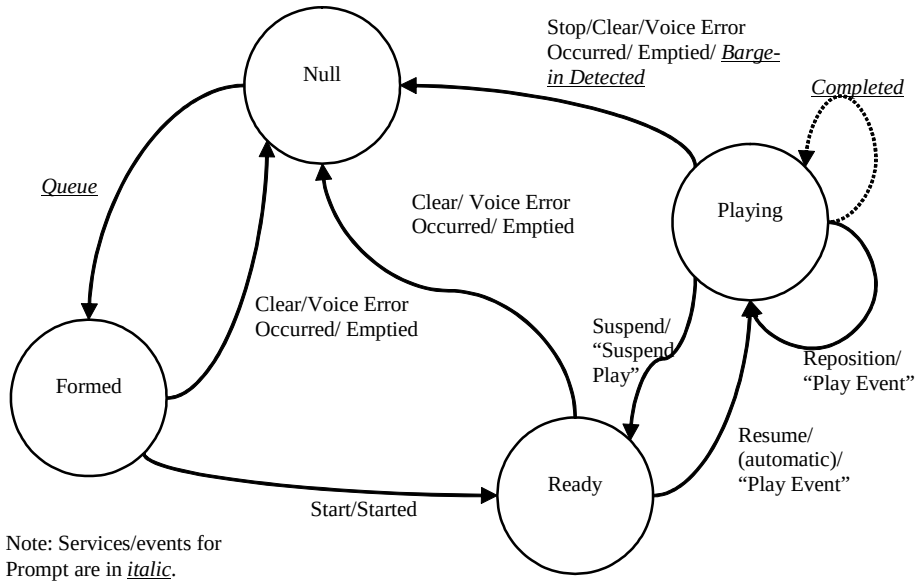

Figure 6-20, "A Relationship of prompts and Prompt Queue Resource" specifies the relationship between subqueues and the Prompt Queue resource in general. Many Voice services and events have the scope at the level of subqueues. Specifically, the Emptied event is generated when all the prompts in a subqueue has been played, even though there are still one or more subqueues stored in the Prompt Queue resource. When an individual prompt encounters errors or is interrupted during playback, the Prompt Queue resource flushes the remaining prompts to the subqueue boundary, not the entire queue. Since the rest of the subqueues are not affected, the audio playback may not be halted if the following subqueue is in the Ready state. The Clear, Query Voice Attribute, Set Voice Attribute, Suspend, and the Resume services, however, have the scope of the entire Prompt Queue resource.

© ISO/IEC 2007 – All rights reserved
Copyright International Organization for Standardization
Provided by IHS under license with ISO
No reproduction or networking permitted without license from IHS
Not for Resale

Figure 6-20 A Relationship of prompts and Prompt Queue Resource

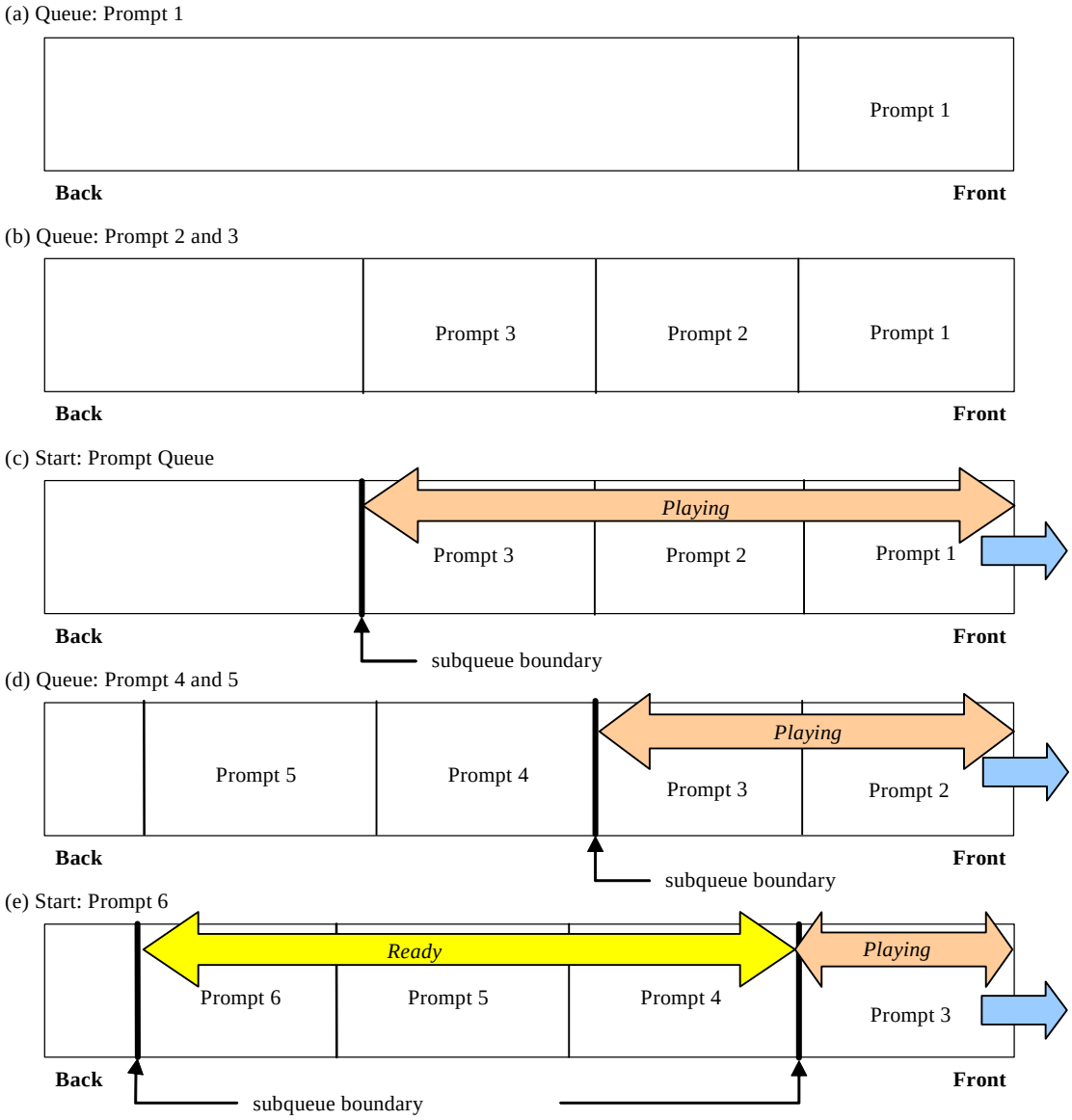

Typically, a subqueue is the most natural unit to administer voice responses. The main purpose of a Prompt Queue resource, which hosts a queue of subqueues, is to insure a high quality of service in the prompt playback, especially for the cases where a real time concatenation and prompt synthesis is not achievable. For example, after obtaining a command from the caller, the Computing Function can queue up several “waiting” prompts into a Prompt Queue resource while the command is being processed. Commonly used waiting prompts include a musical segment intermixed with reassuring phrases such as “lease remain on the line as your call is important to us”. To insure the caller's audio channel is engaged, the Computing Function may need to insure that all the results are properly synthesized and entered into a subqueue to the Prompt Queue resource before stopping the waiting prompts.

6.1.1.4.13 Message Interactive Voice Device Category

A Message Interactive Voice Device has one or more resources that are involved only with processing messages.

© ISO/IEC 2007 – All rights reserved

Copyright International Organization for Standardization
Provided by IHS under license with ISO
No reproduction or networking permitted without license from IHS
Not for Resale

Each resource follows the operational model of a Voice Unit as shown in 6.1.1.4.7, “Voice Unit Device Category”, on page 29.

6.1.1.4.14 Other Device Category

A device in this category has characteristics (i.e., device configuration, capabilities, type of elements, element components) which are switching function specific.

6.1.1.5 Named Device Types

Switching Function implementations may indicate that a device is of a particular device type. The following device types may be used for this purpose but the interpretation of a given device type is implementation specific.

- ACD
- ACD Group
- Button
- Button Group
- Conference Bridge
- Line
- Line Group
- Operator
- Operator Group
- Parking Device
- Station
- Station Group
- Trunk
- Trunk Group
- Other
- Other Group

6.1.1.6 Agent

An agent represents a device’s association and activities with one or more ACD devices or ACD groups.

An agent becomes associated with a specific ACD device or ACD group by the process of logging on. There are two Agent Log On Models that may be supported by a switching function (as indicated by the capability exchange services). Note that multiple models may be supported by a switching function and by a single agent.

- *Log On to an ACD device* - In this model an agent logs on to ACD device and becomes associated with the activities of the ACD device. There is no association with any ACD group. This may be achieved by using the Set Agent State service (loggedOn) without providing the ACD group parameter. Note that this capability cannot be simultaneously supported with the Log On to an ACD Group (implicit/one step) described below.
- *Log On to an ACD Group* - In this model an agent becomes associated with the activities of an ACD group. This may be accomplished by the following:
    - explicit/one step - by using the Set Agent State (loggedOn) service and supplying the ACD group parameter

--`,,```,,,,````-`-`,,`,,`,`,,`---
© ISO/IEC 2007 – All rights reserved
Copyright International Organization for Standardization
Provided by IHS under license with ISO
No reproduction or networking permitted without license from IHS
Not for Resale

- explicit/two step - by first logging on to an ACD device using the Set Agent State (loggedOn) service and omitting the ACD group parameter (described above). Once logged on to an ACD device, a log on to a specific group is achieved by using another Set Agent State (loggedOn) service with the ACD group parameter provided.
- implicit/one step - by logging on to an ACD Group using the Set Agent State (loggedOn) service and omitting the ACD group parameter. If supported by the switching function, the agent is automatically logged on to an ACD group. Note that this capability cannot be simultaneously supported with the Log On to an ACD device.

An agent has several attributes that can be controlled and observed by the computing function, as described below.

6.1.1.6.1 Agent Identifier

Each agent that can be observed and/or controlled within the switching function is referenced using an assigned identifier. This identifier is associated with the logical element's Device Identifier of the device. Certain switching functions may not assign an agent identifier to the agent. In these cases, the logical element's Device Identifier is used to represent the agent associated with the device. The format of the agent identifier is switching function specific.

There are two ways that an agent identifier may be provided:

- as a parameter in an event (via the agentID parameter in the Agent Logged Off event, for example) or
- as a sub-string in the Switching Function Representation format of a logical element's Device Identifier, thereby making a unique identifier for the logical element and the associated agent.

When an agent is associated with more than one ACD group and the switching function assigns a different agent identifier for each ACD group that the agent is associated with, then the following applies:

- The agent identifier shall be supplied (via the agentID parameter) on the agent state events associated with this agent (e.g., Agent Ready, Agent Not Ready).
- This agent identifier may or may not be part of the Device Identifier parameters (i.e., the agent identifier sub-string in the Switching Function Representation format) in the call control events that are associated with the agent in an ACD call. Non-ACD calls are unaffected.
- This agent identifier shall be part of the Device Identifier parameter (i.e., the agent identifier sub-string in the Switching Function Representation format) on services when the computing function want to focus the service at a particular ACD call or group, otherwise if not supplied, the switching function will choose which ACD call or group the service is focused.

When an agent is associated with one ACD group, the switching function may or may not assign an agent identifier to the agent. If the agent identifier is not assigned, the logical element's Device Identifier of the agent device is used to represent the agent in the ACD group. If the agent identifier is assigned, then either the logical element's Device Identifier of the agent device or the agent identifier may be used to represent the agent in the ACD group. This also applies to the case where the switching function has only one agent identifier (either assigned or not) for an agent that is associated with multiple ACD groups. When only one agent identifier is assigned to an agent the following applies:

- The agent identifier may be supplied (via the agentID parameter) on the agent state events associated with this agent (e.g., Agent Ready, Agent Not Ready).
- This agent identifier may be part of the Device Identifier parameters (i.e., the agent identifier sub-string in the Switching Function Representation format) in call control events that are associated with the agent in an ACD call. Non-ACD calls are unaffected.
- This agent identifier may be supplied as part of the Device Identifier parameter (i.e., the agent identifier sub-string in the Switching Function Representation format) on services.

© ISO/IEC 2007 – All rights reserved

Copyright International Organization for Standardization
Provided by IHS under license with ISO
No reproduction or networking permitted without license from IHS
Not for Resale

Note that when the agent identifier is supplied as part of the Device Identifier and the agent identifier is not associated with the device, the service request shall be rejected with a negative acknowledgement.

6.1.1.6.2 Agent Password

The agent password authenticates the agent's association with a given device and ACD device or ACD group in the switching sub-domain. The agent password is used when the agent is associated with the device and made available to the ACD device or ACD group (i.e., log on) and when the agent is made unavailable to the ACD device or ACD group (i.e., log off). An agent password may be assigned to each agent. For more details, refer to the definition of the agentPassword parameter in associated services.

6.1.1.6.3 Agent Group Association

This identifies the ACD group that is associated with the agent. There can be zero or more ACD groups associated with the same agent. This is represented via the ACD group's logical element's Device Identifier.

6.1.1.6.4 Agent State

A state that an agent may take in relation to an ACD device or ACD group and the calls associated with the ACD device or ACD group.

The computing function is informed of agent state changes through agent state event reporting. These event reports are sent to the computing function when a monitor is started on either the ACD device or ACD group (if supported by the switching function) or the device associated with the agent or agents. The following are the agent states with respect to an agent and a particular ACD device or ACD group:

- *Agent Null* - The state where an agent is not logged-on to (i.e., logged off from) the ACD device or ACD group at a particular device. Logging-on and logging-off from an ACD device or ACD group shall cause the transitions from and to this state. The event report that represents the entry to this state is the Agent Logged Off event. Note that the presence/absence of the ACD Group parameter in this event determines if the agent has logged off of an ACD device or an ACD group
- *Agent Logged On* - The state where an agent is logged-on at a particular device to an ACD device or ACD group and is ready to contribute to the activities of the ACD device or ACD group. This state does not indicate that the agent is ready to accept ACD calls (refer to the Agent Ready event section). The event report that represents the entry to this state is the Agent Logged On event. Note that the presence/ absence of the ACD Group parameter in this event determines if the agent has logged on to an ACD device or an ACD group.
- *Agent Not Ready* - The state where an agent is logged-on at a particular device to an ACD device or ACD group but is not prepared to handle calls that the ACD distributes. While in this state an agent may receive calls that are not ACD calls. The event report that represents the entry to this state is the Agent Not Ready event.
- *Agent Ready* - The state where an agent is logged-on at a particular device to an ACD device or ACD group and is prepared to handle ACD calls even though it may be involved with non-ACD calls. The event report that represents the entry to this state is the Agent Ready event.
- *Agent Busy* - The state where an agent is involved with an existing ACD call at the device, even if that call is on hold at that device. Calls between agents, calls between supervisors and agents and private calls may or may not cause this transition. The event report that represents the entry to this state is the Agent Busy event.
- *Agent Working After Call* - The state where an agent is no longer connected to an ACD call but is still occupied with work related to a previous ACD call. In this state, an agent cannot receive ACD calls but may be able to receive non-ACD calls. The agent may be performing administrative duties (e.g., updating a business order form) for a previous call, or may be involved with a non-ACD call. The event report that represents the entry to this state is the Agent Working After Call event.

© ISO/IEC 2007 – All rights reserved

Copyright International Organization for Standardization
Provided by IHS under license with ISO
No reproduction or networking permitted without license from IHS
Not for Resale

Note that this Standard does not impose or restrict the transition of an agent state to another agent state. Any implementation restrictions shall be reflected by a negative acknowledgement to the Set Agent State service request.

6.1.1.6.5 Agent State Models

It is possible that an agent may have several agent states with respect to the different associated ACD devices or ACD groups. Alternatively, an agent may have a single state to describe its relationship to all associated ACD devices or ACD groups (if the state is, in fact, the same for all of them).

The following Multi-State Agent models that indicate how the switching function maintains the agent states for each ACD or ACD group that is associated with an agent. (The capability exchange services indicate which models are supported by a switching function.) The models are:

Agent Multi-State Model (Independent Group Working)

In this model, as illustrated in Table 6-1, the switching function maintains an independent agent state model for each ACD device or ACD group associated with an agent. All agent state transitions are totally independent. The cause code of Forced Transition does not appear since no state is forced. (Note that the numbers between parenthesis in the following figures represent the ACD group number).

Table 6-1 Agent Multi-State Model (Independent Group Working) Illustration

	Step 1	Step 2	Step 3	Step 4	Step 5
ACD Group 1 State	Not Ready (1)	Not Ready (1)	Not Ready (1)	Not Ready (1)	Ready (1)
ACD Group 2 State	Not Ready (2)	Ready (2)	Busy (2)	Working After Call (2)	Ready (2)
ACD Group 3 State	Not Ready (3)	Ready (3)	Ready (3)	Ready (3)	Busy (3)
ACD Device State	Ready	Busy	Busy	Busy	Ready

Agent Multi-State Model (Semi-Independent Linked)

In this model, as illustrated in Table 6-2, the switching function maintains an agent state model for each ACD device or ACD group associated with an agent. However the agent state models for each ACD device or ACD group are linked together. For example, if an agent is associated with two ACD groups (both states are Ready), and the agent connects to an ACD call for the first ACD group, the agent state for the first group transitions to Busy while the agent state for the second group goes to Not Ready (with a cause code of Forced Transition to indicate that the state transition was the result of another ACD device or ACD group activity).

Table 6-2 Agent Multi-State Model (Semi-Independent Linked) Illustration

	Step 1	Step 2	Step 3	Step 4	Step 5
ACD Group 1 State	Not Ready (1)	Not Ready (1)	Not Ready (1) - Forced T. cause	Not Ready (1) - Forced T. cause	Not Ready (1)
ACD Group 2 State	Not Ready (2)	Ready (2)	Busy (2)	Working After Call (2)	Ready (2)
ACD Group 3 State	Not Ready (3)	Ready (3)	Not Ready (3) - Forced T. cause	Not Ready (3) - Forced T. cause	Ready (3)
ACD Device State	Ready	Ready	Not Ready - Forced T. cause	Not Ready - Forced T. cause	Ready

Agent Orientated Model

In this model, as illustrated in Table 6-3, the switching function maintains one state for the agent, no matter how many ACD devices or ACD groups the agent is associated with. When the ACD Group parameter is included in

© ISO/IEC 2007 – All rights reserved

Copyright International Organization for Standardization
Provided by IHS under license with ISO
No reproduction or networking permitted without license from IHS
Not for Resale

an agent event, it indicates the ACD group that has caused the agent state transition. When the ACD Group parameter is not included in an agent event, it indicates that non-ACD group activity has occurred.

Table 6-3 Agent Orientated Model Illustration

	Step 1	Step 2	Step 3	Step 4	Step 5
ACD Group 1 State	Not Ready	Ready	Busy	Working After Call	Ready
ACD Group2 State	Not Ready	Ready	Busy	Working After Call	Ready
ACD Group 3 State	Not Ready	Ready	Busy	Working After Call	Ready
ACD Device State	Not Ready	Ready	Busy	Working After Call	Ready
Single Event	Not Ready (2)	Ready (2)	Busy(2)	Working After Call (2)	Ready (2)

6.1.2 Call

Calls are communication relationships between one or more CSTA Devices. A call's behaviour can be observed and manipulated across the CSTA service boundary (also called service boundary in this Standard). During some call phases (e.g., establishment and release) the call is not completely formed and there may be only a single CSTA Device involved (for example, the CSTA Device on whose behalf the call was initiated). In some call control operations, such as a conference and transfer, one CSTA Device in a call is replaced with another CSTA Device, or two calls are merged into a single call.

The CSTA Call attributes, which are described in detail in the following sub-clauses, shall be:

- Call Identifier
- Correlator Data
- User Data
- Media Call Characteristics
- Account Information
- Authorisation Code
- Charging Information

6.1.2.1 Call Identifier

A CSTA *Call Identifier* (also called *Call Identifier*) is a reference associated with a call whereby the call is known to the switching, computing and special resource functions through the call's life. A Call Identifier shall be allocated to each call by the Switching Function, at the latest, when the call first becomes visible across a CSTA Service Boundary. It shall be unique within a switching sub-domain and shall be the same for all CSTA Devices in the call. A Call Identifier can be assigned to a call before the call is fully established. For example, an incoming call may be assigned a Call Identifier when the called CSTA Device is alerting and before the call has been answered. A Call Identifier shall not only reference the entire call within the sub-domain but shall also infer a reference to that part of the call that is outside the sub-domain.

A call can pass through various stages involving many different CSTA Devices before it finally terminates. Some of these stages cause a call to change identifiers. Examples of services that cause this are Transfer and Conference. During the operation of these services, or as a result of manual intervention, the Call Identifier may change as a result of two calls being merged by the switching function but the call shall continue as a CSTA object. This merger results in the Call Identifiers for both old calls changing to a new identifier for the resulting calls in which the CSTA Devices are involved. The respective Conferenced or Transferred event specifies the

© ISO/IEC 2007 – All rights reserved

Copyright International Organization for Standardization
Provided by IHS under license with ISO
No reproduction or networking permitted without license from IHS
Not for Resale

transition from the old Call Identifiers to the new Call Identifiers indicating the old invalid Call Identifiers. Management of Call Identifiers is covered in section 6.1.6, “Management of Dynamically-Assigned Identifiers”.

6.1.2.2 Call State

The term *Call State* means the collective set of Connection states for all the Connections comprising a call. Call state is returned only by the Snapshot Device Service for CSTA Devices that have calls. Connection states are further described in 6.1.3, “Connection”, on page 49. Call states are described in more detail in 6.1.4, “Call State Definitions”, on page 53.

6.1.2.3 Correlator Data

Correlator Data is computing function specific data which has been attached to a call that a computing function is controlling or observing. This information, for example, might be a key to a database entry, an application command sequence, file name, etc. Once Correlator Data is associated with a call, it remains with the call for its entire duration (at least one CSTA Device is actively involved in the call), or until the computing function overwrites the data with new data. In order to remove data, the computing function shall overwrite the existing data with null data. Correlator Data enters the switching sub-domain in two ways:

1. A computing function provides Correlator Data on a service request (e.g. Call Control and Call Associated services).
2. Correlator Data arrives from an external network connection with a call (for example, Correlator Data may be used as a key to pop a screen for the call). This Standard defines one possible mechanism for delivering Correlator Data through an external network. This mechanism is described in Annex B.

Permitting a computing function to associate its own information with a call allows multiple computing functions to share data on calls which they are all controlling or observing. This feature is useful when calls are moving from one computing function to another in a distributed computer network or from one switching sub-domain to another. For more information on Correlator Data, refer to 12.2.10, “CorrelatorData”, on page 112.

Correlator Data is provided by the Computing Function and associated with the call for its entire duration or until overwritten with new data. This data survives Conference and Transfer and can be provided on various events. An application may remove the Correlator Data by overwriting existing data with null data.

When Correlator Data is associated with a call, call events that indicate that a CSTA Device has become part of a call (such as Delivered, Established and Queued events, for example) shall include the Correlator Data (if this parameter is supported in the event being reported). Subsequent call events also may contain the Correlator Data.

Note that “null Correlator Data” means Correlator Data information with zero length.

When a consultation call is transferred or conferenced and null or non-null Correlator Data is associated with the secondary call, the Correlator Data in the resulting call shall always be the same Correlator Data that was associated with the secondary call (even if only the primary call had non-null Correlator Data). In that case the Correlator Data (if any) associated with the primary call is discarded. If the secondary call contains no Correlator Data, the Correlator Data associated with the resulting call is that which was associated with the primary call.

Table 6-4 Inheritance rules for Correlator Data in Conference and Transfer

Secondary Call	Primary Call		
	No Correlator Data	Null Correlator Data	Correlator Data 1
No Correlator Data	No Correlator Data	Null Correlator Data	Correlator Data 1
Null Correlator Data	Null Correlator Data	Null Correlator Data	Null Correlator Data
Correlator Data 2	Correlator Data 2	Correlator Data 2	Correlator Data 2

© ISO/IEC 2007 – All rights reserved

Copyright International Organization for Standardization
Provided by IHS under license with ISO
No reproduction or networking permitted without license from IHS
Not for Resale

When Correlator Data is associated with a call via the Associate Data service, the Call Information event is provided by the switching function. If the data is changed by any other service, the switching function does not provide the Call Information event.

6.1.2.4 User Data

User Data is call-related computing function-to-computing function information that, unlike Correlator Data, is not associated with a call for the life of the call. The switching function receives User Data in two ways:

- A computing function sends User Data in a service request.
- User Data arrives from an external network connection with a call (for example, User Data may be used as a key to pop a screen for the call).

Both a computing function and the network may send User Data in two ways:

1. *With Call Control Activity* - Call control service requests (and network signalling for call control) permit User Data as an optional parameter. The switching function reflects the delivery of User Data in the first call control event that results from the switching function or network carrying out the call control activity. When the computing function provides User Data in a Call Control service request, the User Data is delivered to other parties if and only if the call control service successfully completes. If the switching function does not generate the call control event that corresponds to the call control activity because the computing function has set an event filter that filters out the relevant event, then the User Data is not propagated to subsequent events and the User Data information will be lost. Refer to the description of the individual Call Control services for more details on the events that will contain User Data for those services.
2. *Independent of Call Control Activity* - The computing function may use the Send User Information service to pass User Data at any time. Some networks provide an independent signalling mechanism for sending User Data. The switching function generates a Call Information event with the userData parameter containing the received User Data to reflect the delivery of the User Data. Independent of call control activity, this event is generated for all computing functions monitoring the call and all computing functions monitoring any CSTA Devices that have a connection to that call.

   This Standard defines one possible mechanism for delivering User Data through an external network. This mechanism is described in Annex B.

When a computing function uses a service to send User Data, the switching function sends that User Data only after the switching function sends a positive acknowledgement to the service request.

User Data is described further in 12.2.27, “UserData”, on page 136.

6.1.2.5 Other Call Related Information

There is additional information associated with calls such as:

- *Account Information* - A computing function or business-specific piece of information that is assigned to a call for accounting purposes. For more information, see 12.2.1, “AccountInfo”, on page 107.
- *Authorisation Code* - A code provided to the switching function that is used to check if a computing function user is authorised to perform a given service. For more information see 12.2.3, “AuthCode”, on page 107.
- *Charging Information* - An amount charged to a device for a call in which the device was involved. For more information, see 12.2.7, “ChargingInfo”, on page 110.

© ISO/IEC 2007 – All rights reserved

Copyright International Organization for Standardization
Provided by IHS under license with ISO
No reproduction or networking permitted without license from IHS
Not for Resale

6.1.2.6 Media Call Characteristics

This Standard covers the control and observation of calls within either a voice or digital data switching sub-domain (e.g., network) or a switching sub-domain that is a combination of both (voice and digital data). Within the set of possible digital data switching sub-domains, this Standard is limited to a sub-set of these switching sub-domains with the following characteristics:

- connection-oriented
- circuit or cell-based packet switching
- point-to-point, and multi-point topology
- A connection in a call may represent either zero, one, or many data channels within the switching sub-domain.
- A CSTA Device can have multiple calls.

Examples of these digital data switching sub-domains that support these characteristics are;

- T1
- ISO-Ethernet (TDM part of the protocol)
- ISDN
- Switched 56
- RSVP
- ATM (B-ISDN)
- SIP

As a result, another attribute of a call is the Media Class (i.e., Voice or Data). Voice calls and the sub-set of digital data calls as described above use the same model for control and observation but with some additional unique characteristics for digital data. The following is the list of characteristics:

1. *Media Class* - Describes the type of call. It may consist of one or more of the following classes.
    - **Data** - These types of calls involve digital data calls (both circuit switched and packet switched). Devices that may be involved with these types of calls are digital computer interfaces and G4 facsimile machines.
    - **Image** - Digital data calls involving imaging, or high-speed, circuit-switched data in general. Devices that may be involved with these types of calls include digital video telephones and CODECs.
    - **Voice** - Devices in this class are used to make speech calls. This class includes standard telephones.
    - **Audio** - 3.1 KHz audio. Devices in this class are used to make audio calls excluding speech calls. It includes G3 fax and facsimile machines.
    - **Chat** - A type of Data class call that involves text-based messages that are exchanged between devices in the call using electronic media. A chat call is interactive since devices in the call can participate at the same time (i.e. originate and receive messages during the call.). The Data class must also be set for a Chat call.
    - **Email** - This class of calls involve a text-based message that is sent using electronic media. This is a non-interactive call (i.e. only one device involved with the call at one time). This is a specific type of mediaClass associated with electronic mail systems.
    - **Message** - This class of calls involve a text-based message that is sent using electronic media. This is a non-interactive call (i.e. only one device is involved with the call at one time). The

© ISO/IEC 2007 – All rights reserved

Copyright International Organization for Standardization
Provided by IHS under license with ISO
No reproduction or networking permitted without license from IHS
Not for Resale

message contents associated with these calls can usually be displayed on the called devices. Instant Messages (IM), Short Message Service (SMS) are examples of this mediaClass.

- **IM** (Instant Message) - This class of calls involve a text-based message that is sent using electronic media. This is a non-interactive call (i.e. only one device involved with the call at one time). This is a specific type of Message media class associated with Instant Messaging systems.
- **SMS** (Short Message Service) - This class of calls involve a text-based message that is sent using electronic media. This is a non-interactive call (i.e. only one device involved with the call at one time). This is a specific type of Message media class associated with Short Message Services systems.
- **MMS** (Multi-Media Message Service) - This class of calls involve a text-based message that is sent using electronic media. This is a non-interactive call (i.e. only one device involved with the call at one time). This is a specific type of Message media class associated with Multi-Media Message Services systems.
- **Other** - A class of call not involving one of the above classes.

2. *Connection Rate* - This characteristic reflects the amount of bandwidth which is needed or allocated for a digital data call. This characteristic is specified in kilobits per second. This characteristic also represents the amount of bandwidth for both directions of data flow. The computing function can learn about a switching function's supported rates through the capability exchange services.
3. *Bit Rate* - This characteristic specifies if the bit rate is or needs to be a constant rate (i.e., dedicated bandwidth and constant rate of media stream delivery) or variable rate. A constant rate is used for media streams like audio or video. A variable rate is used for media stream like computer-generated data transfer.
4. *Delay Tolerance* - This characteristic specifies the maximum amount of media stream delivery delay that will be toleranced for the call. If the bit rate is constant, then this value will indicate the actual amount of media stream delivery delay for the life of the call. Where as if the bit rate is variable, it will be the maximum delay allowed during the life of the call.
5. *Switching Function Call Control Information Elements* - This characteristic provides a mechanism which enables the use of the switching function private call control information elements to be used during the life of a digital data call (e.g., elements used during call setup). The format, meaning and behaviour of these information elements are specific to the given switching function. This Standard allows the following types of switching function private call control information elements:
   - *ISDN* - All information elements associated with call control from the ITU Q.931 standard.
   - *ATM* - All information elements associated with call control from the ITU B-ISDN Q.2931 standard.
   - *RSVP* - All information elements associated with the call control from the IETF RSVP functional specification.
   - *ISO-Ethernet (TDM part of the protocol)* - All information elements associated with call control from the 802.9 standard (a modified version of Q.933).
   - Private ISDN - All information elements associated with call control and supplementary service control from ECMA-143 and ECMA-165.
   - *SIP* - All information elements (SIP Headers) associated with call control and supplementary service control from IETF 3261 (and later versions).
   - *Other* - All information elements associated with call control from the particular switching function specification.

--`,,```,,,,````-`-`,,`,,`,`,,`---
© ISO/IEC 2007 – All rights reserved
Copyright International Organization for Standardization
Provided by IHS under license with ISO
No reproduction or networking permitted without license from IHS
Not for Resale

For details on the specific information elements of these types, see the appropriate standards or switching function specific documentation. If a given information element overlaps with an attributes or characteristic that is defined by this Standard, the information element should not be used and the attribute or characteristic in this Standard should be used. If both are supplied, then they shall contain the same value. In addition, any information element that deals with device addressing shall not be used (e.g., calling party number, calling party subaddress). The CSTA Device addressing in this Standard shall be used.

Once these characteristics are established for a digital data call, they may, depending upon the protocol (e.g. SIP), be changed. These characteristics apply to all connections of the call.

The combination of these characteristics represents the *quality of service* associated with a given digital data call. The meaning of the quality of service which respect to characteristic combination is switching function specific.

6.1.2.7 Call Linkage

Although each CSTA call is independent of any other call (e.g., uniquely identified via its own call identifier), some CSTA calls can be related to other calls that exist in the same switching sub-domain or in different switching sub-domains.

6.1.2.7.1 Global Calls

Figure 6-21 shows how a call in one switching sub-domain is related to a call in another switching sub-domain because both calls are part of the same “end-to-end” or “global” call. Even though there is a CSTA call in each switching sub-domain (C1 and C2), both calls are part of the same “end-to-end” or “global” call identified as G1 in the figure.

The call linkage feature provides a reference (globalCallData) that can be used to represent the global call.

Figure 6-21 Illustration of a “global” or “end-to-end” call

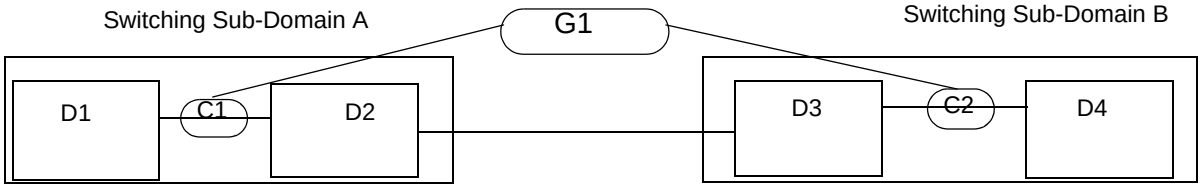

legend:
- Device D1 in sub-domain A called Device D4 in sub-domain B.
- CSTA Call C1 represents a call in switching sub-domain A between calling device (D1) and an outgoing tr
- CSTA Call C2 represents a call in switching sub-domain B between incoming trunk (D3) and a called devi
- Global Call G1 represents the end-to-end view of the call.

6.1.2.7.2 Call Threads

Different calls (CSTA calls or global calls) can be associated because they are part of the same or part of a related telephony process or call thread.

For example, as part of a CSTA Consultation Call service, a call that is placed on hold is associated or linked to the newly created consulted call.

Figure 6-22 illustrates the relationship between three CSTA calls (C1, C2, C3), two global calls (G1 and G2), and one call thread (T1) as the result of when device D1 in switching sub-domain A consults with device D5 in switching sub-domain B.

© ISO/IEC 2007 – All rights reserved

Copyright International Organization for Standardization
Provided by IHS under license with ISO
No reproduction or networking permitted without license from IHS
Not for Resale

Figure 6-22 Illustration of a Call Thread

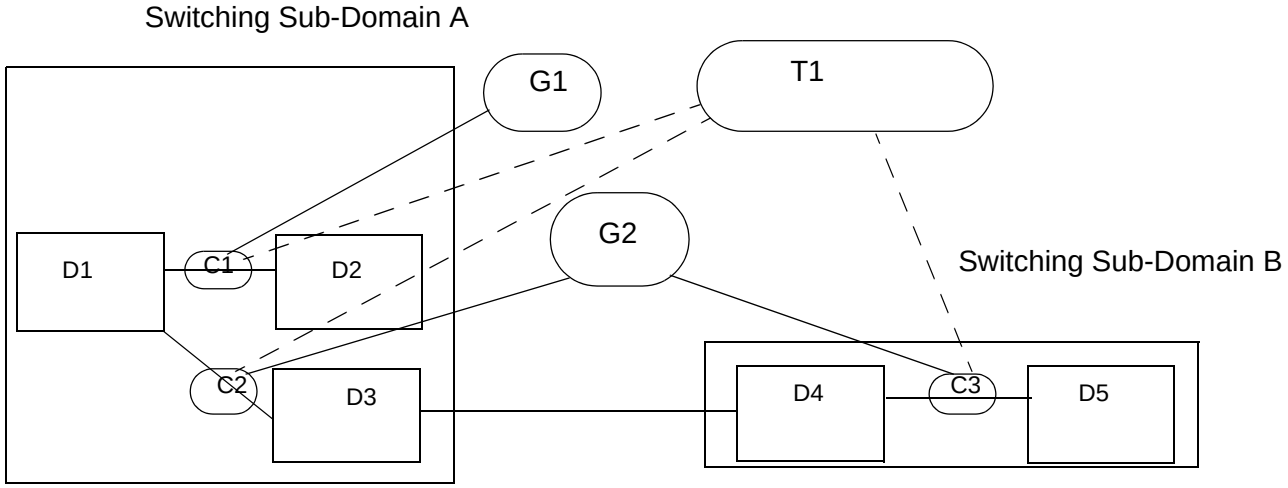

legend:
- Device D1 has a call with device D2 and has consulted with device D5 in switching sub-domain B.
- (D3 is an outgoing trunk and D4 is an incoming trunk).
- There are two “end-to-end” or “global calls”: G1 involves devices D1 and D2. G2 involves devices D1, D3, D
- There is one thread identified as T1. This thread involves calls C1, C2, and C3.

The call linkage feature provides a reference (threadData) that can be used to associate different CSTA calls in a call thread. This information may be used by applications for correlating calls in multiple switching sub-domains, for correlating calls for charging/accounting purposes, or for call reporting purposes, etc.

6.1.2.7.3 Call Linkage Data

If the switching function supports the call linkage feature, it maintains call linkage data for every call and provides it on call control events (where specified) via the callLinkageData parameter (see 12.2.5, “CallLinkageData”, on page 108). Call linkage data can also be obtained via the Snapshot Call service.

The call linkage data consists of two components each representing a different relationship of the call to other calls. The globalCallData component is always provided if the switch supports the call linkage feature. The threadData component is only provided if the switching function also supports the thread linkage feature (as indicated by the capability exchange services). The two components are:

1. globalCallData - This component represents a “global” or “end-to-end” view of the call. The global call may involve one or more endpoints. The endpoints may reside in the same switching sub-domain or in multiple sub-domains. If the call resides in multiple switching sub-domains, there may be multiple switching sub-domain (CSTA) calls involved in the global call, all referenced by the same globalCallData. When a new call is created, a switching function shall either:
   - create new globalCallData for that call if the new call is not part of an existing global call
   - use the existing call’s globalCallData for the new call if the new call is part of an existing global call. This occurs when call arrives from another switching sub-domain and globalCallData is provided with the call.
2. threadData - This component represents a call thread - the set of calls that are associated because they are part of the same or a related telephony process. The call thread may involve multiple (CSTA and global) calls. When a new call is created, a switching function shall either:
   - create new threadData for that call if there is no linkage to another call.
   - use existing threadData from a linked call for the new call (i.e., the call inherits the threadData from another call). The threadData can be inherited from a call from the same switching sub-domain (as

© ISO/IEC 2007 – All rights reserved
Copyright International Organization for Standardization
Provided by IHS under license with ISO
No reproduction or networking permitted without license from IHS
Not for Resale

part of a CSTA Consultation Call service, for example) or can be inherited from a call from another switching sub-domain (if provided with the call).

- When two calls are conferenced or transferred, the following inheritance rules apply:
  - if only one of the calls was an incoming call (where an incoming call is defined as a call that was not originated at this device) at the conferencing/transferring device, the threadData for the resulting call shall be inherited from the incoming call. The threadData associated with the other call shall be discarded.
  - if both of the calls were incoming calls at the conferencing/transferring device, the threadData for the resulting call shall be inherited from the call that arrived first at the conferencing/ transferring device. The threadData associated with the other call shall be discarded.
  - if both calls originated at the conferencing/transferring device, the threadData for the resulting call shall be inherited from the first call that originated at the conferencing/transferring device. The threadData associated with the other call shall be discarded.

Refer to 12.2.5, “CallLinkageData”, on page 108 for more information on the CallLinkageData parameter type.

6.1.2.7.4 Synchronization of Call Linkage Data

When callLinkageData associated with a call is updated due to a telephony feature, callLinkageData shall be synchronized between calls in a switching sub-domain or between calls in different switching sub-domains. For example, if a call is sent from an originating switching sub-domain to a terminating switching sub-domain, and then the callLinkageData is changed in the terminating switching sub-domain because of a conference, then the terminating switching sub-domain shall notify the originating switching sub-domain that its callLinkageData has changed so that the originating switching sub-domain can associate the updated callLinkageData with its call. (Annex B defines one possible mechanism that could be used for transporting the call linkage data through an external network.)

The following CSTA events indicate when the callLinkageData associated with a call has been updated:

- The CSTA Conferenced and Transferred events are used to indicate that the callLinkageData has changed as a result of a conference or transfer feature.
- Otherwise, the CSTA Call Information event is used when the callLinkageData has been updated, in the same switching sub-domain that is reporting the Call Information event or in a different switching sub-domain. For example, for a call between two switching sub-domains, the Call Information event can be used to indicate that the callLinkageData has changed as a result of a feature in a *different* switching sub-domain (the mechanism described in Annex B is one way to transport the callLinkageData over the external network).

6.1.3 Connection

A *connection* is a relationship in a switching sub-domain between a CSTA Device, and a call in which that CSTA Device is involved. This connection relationship can be both observed and manipulated. Figure 6-23 illustrates the relationship between calls, devices, and connections.

Figure 6-23 Relationship between Calls, Devices, and Connections

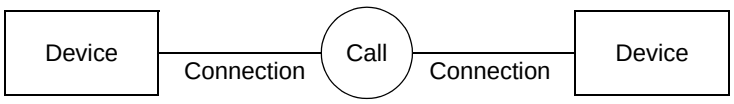

© ISO/IEC 2007 – All rights reserved

Copyright International Organization for Standardization
Provided by IHS under license with ISO
No reproduction or networking permitted without license from IHS
Not for Resale

Observation and manipulation of these connections are the basis for call control services (such as Clear Connection, Answer Call, etc.). Connections are CSTA Objects that have the following attributes:

1. *Connection Identifier* - Each connection that can be observed and/or controlled shall be referenced across the service boundary. To accomplish this, each connection is assigned a unique identifier by the switching function. This identifier is comprised of a Device Identifier and a Call Identifier. For a call, there are as many Connection Identifiers as there are associated devices, and for a device there are as many Connection Identifiers as there are associated calls. The Connection Identifier is unique within a sub-domain and over a single service boundary. It is provided by the switching function when either a new call is created or a new device becomes involved in a a call. A Connection Identifier can change as a result of some operations (e.g., a transfer or conference) and in these cases the switching function presents the computing function with the appropriate information to transit from the old identifiers to the new. The Device Identifier used in the Connection Identifier may be either static or dynamically-assigned by the switching function.

   As provided by the switching function to the computing function, a Connection Identifier will always include both a Device Identifier and a Call Identifier (unless otherwise noted in the specification of a particular CSTA event's parameters). Computing functions wanting to correlate event reports which associate devices connected together in a call can use the Call Identifier to do this correlation. The definitions of a Connection Identifier and those identifiers that it comprises (Call and Device Identifiers) restrict computing functions from fabricating Connection Identifiers.

   As provided by the computing function to the switching function, a Connection Identifier shall be one which was originally provided by the switching function. An exception to this rule is where either a deviceID only or a callID only Connection Identifier is used in a specific service (as indicated by the capability exchange services). If a Connection Identifier, provided by the computing function, includes only a Device Identifier, then that Device Identifier shall be a static Device Identifier. These conditions ensure that it is possible to use only a Device Identifier (without a Call Identifier) or a Call Identifier (without a Device Identifier) to provide a Connection Identifier in certain specified circumstances.

   For additional details regarding Connection Identifiers, including Connection Identifier formats and specific functional requirements, see 12.3.9, "ConnectionID", on page 141.

   2.*Media Stream Flow Direction* - This attribute is the direction or directions in which the media stream can be transmitted on the given connection. The following are the types of directions that can be associated with a connection:

   - *Transmit* - Media stream data can only be transmitted on the connection by the associated device.
   - *Receive* - Media stream data can only be received on the connection by the associated device.
   - *Transmit and Receive* -Media stream data can be transmitted and received on the connection by the associated device.
   - *None* - Media stream data cannot be transmitted or received on the connection by the associated device.

   The media stream flow direction can be specified (via the participationType parameter or the connectionInformation parameters) on certain CSTA services and modified via the Change Connection Information service (see 18.1.3 on page 370). The media stream flow direction is indicated in events via the connectionInformation parameter and in the response to the Snapshot services.

   3.*Media Stream Channels* - A channel is a path of communications between devices within a network. Channels are created to transmit/receive the media stream when the associated connection is created for the device in the call. The correlation of a channel to an actual media stream communications path/ channel within the switching function is switching function specific. The switching function may represent a channel as a group of actual media stream communication paths. A device's connection represents a channel or set of channels on which the media stream associated with the call is to be transmitted and received. The number of channels per connection is switching function and device specific (the capability

© ISO/IEC 2007 – All rights reserved

Copyright International Organization for Standardization
Provided by IHS under license with ISO
No reproduction or networking permitted without license from IHS
Not for Resale

exchange services may be used to determine the value). A digital data connection can use one or more channels. In addition, there can be multiple media stream types associated with a given connection as well as the associated channels. The attachment of media services is to a connection and its associated channels as a whole. The switching function is then responsible for attaching the Media services to the appropriate channels.

4. *Media Session Information* - Protocol specific information may be associated with the connection related to the media stream. This could be information derived from the Session Description Protocol (SDP), for example. The switching function may provide this information as media session information. The format, meaning and behaviour of the media session information is specific to the given switching function.

5. *Connection State* - A connection state involves a single call/device relationship. When a call is present at a device, the connection representing that call at that device will transit through various stages. State transitions are observed by the computing function through event reports. The transition from one state to the next is caused by either a manual user stimulus or a CSTA service initiated across the service boundary. Connection states may also be reported by Snapshots on either calls or devices.

Figure 6-24 Connection State Model

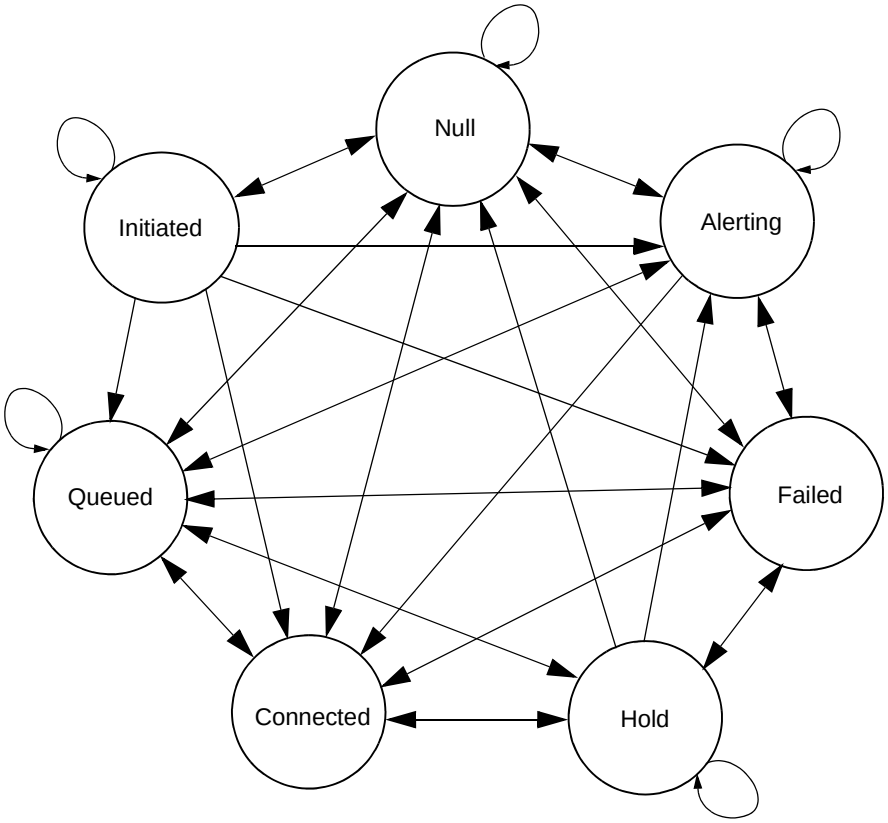

The following are the connection state definitions:

- *Alerting* - A state in which an attempt is being made to connect a call to a device. There are three distinct modes where a connection may be in the alerting state:
    - *Offered* - In this mode, the call is in a pre-delivery state at the target device. The opportunity exists for a computing function to issue one of a set of supported services (e.g., Accept Call, Clear Connection (“reject”), Deflect Call) or an ISDN device to accept or reject the call. From the calling side perspective, the call is not delivered at the called device. As a consequence, delivery information such as Ringback indication and/or Network signalling is not provided. For example,

© ISO/IEC 2007 – All rights reserved

Copyright International Organization for Standardization
Provided by IHS under license with ISO
No reproduction or networking permitted without license from IHS
Not for Resale

the device makes no ringing sounds while in the Offered mode of the Alerting state. The Offered mode is indicated by an Offered event.

- *Ringing* - In this mode, the call is being presented for the purpose of having the device connect to the call and the user is made aware that the call is being delivered at the device. The Ringing mode is indicated by a Delivered event with a cause code other than “Entering Distribution”. The actual device activity to notify the user (e.g., ringing) is reported through the physical device feature events.
- *Entering Distribution* - In this mode, a call is being delivered to a distribution device. The Entering Distribution mode is indicated by a Delivered event with a cause code of “Entering Distribution”.

- *Connected* - A state in which a device is actively participating in a call. This state includes logical participation in a call as well as physical participation.
- *Failed* - A state in which call progression has been aborted. This state generally results when a device tries to become Connected to a call or a call tries to become Connected to a device and the attempt fails. The Failed state can result from failure to connect the calling device and call, failure to connect the called device and call, failure to create the call, failure when the call ends and other reasons. Refer to 6.7.2, “Connection Failure”, on page 71 for more information.
- *Hold* - A state in which a device is inactively participating in a call. This state includes logical participation in a call while physical participation is suspended.
- *Initiated* - A state in which a device is requesting a service or in the process of dialling the necessary digit sequence to initiate a call to another device. The connection enters this state when the device goes off-hook (e.g., receiving dialtone) or the device is being prompted to go off-hook as a result of some service being initiated for the device.
- *Null* - A state in which there is no relationship between a call and device.
- *Queued* - A state in which call progression is suspended or made inactive while awaiting some form of action. Examples of situations in which a connection might transit to the Queued state include (among others) the following:
  - A call is parked at a device.
  - A call is queued at a distribution mechanism, waiting for an agent to become available.
  - A call is camped on to a device.
  - An appearance of a shared bridged device configuration is inactive with respect to the call.

Table D-1 on page 684 provides an example to illustrate each transition which is illustrated in Figure 6-24, “Connection State Model” [2)].

6.1.3.1 Call Event Reports

The Connection state model provides an abstract view of actual states and events that are communicated via underlying signalling systems. This abstract view is introduced to provide a language for describing CSTA Event Reports, states and Functional descriptions. Because of the topology of the Switching Function, the signals that report events and state changes have definite sources. Providing a telecommunications object (the Connection) that can be associated with the source of these signals helps when explaining the meaning of events and the operation of CSTA (and other) telecommunications services.

Note that on a typical ISDN access to a network there exists a distributed state machine. One part of this distributed state machine resides in the ISDN device. Another part resides on the other side of the ISDN access. There is another similar distributed-state access machine that resides across the ISDN network at a similar device. Using this concept, a call can be modeled as a collection of Connection state machines

2) For an explanation of the Initial and Final State diagrams’ nomenclature used the Table D-1, refer to Clause 11, “Template Descriptions”, beginning on page 102.

© ISO/IEC 2007 – All rights reserved

Copyright International Organization for Standardization
Provided by IHS under license with ISO
No reproduction or networking permitted without license from IHS
Not for Resale

communicating with one another using signalling. When this communication occurs, a CSTA Event Report can be generated. In the following figure, this concept of communication between two state machines is illustrated for the case of establishing a simple call. Additionally, on each side of the figure the ISDN call states are indicated.

Figure 6-25 Relationship of CSTA Call Event Reports

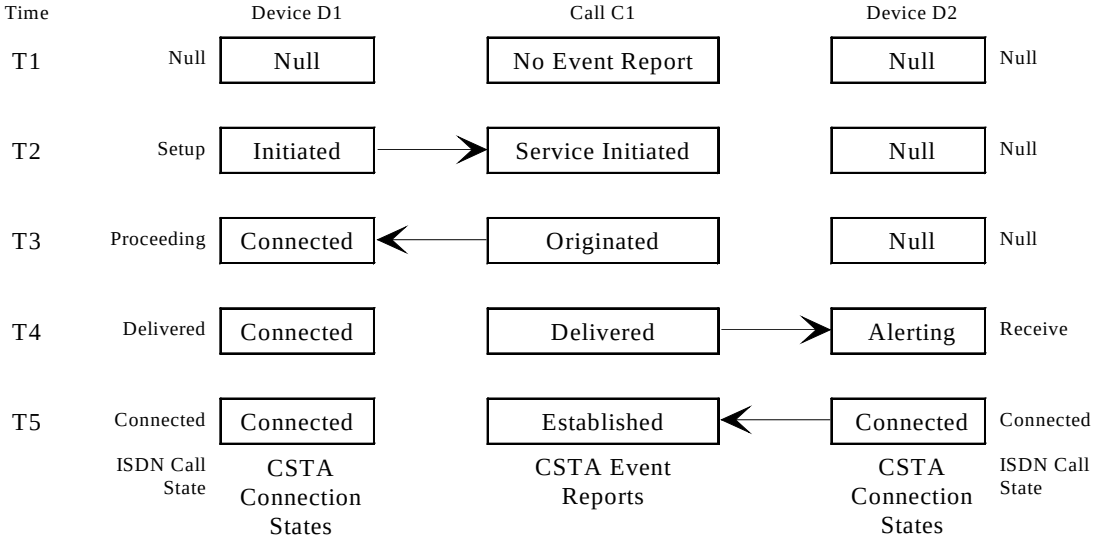

Notice in Figure 6-25 that the CSTA Event Reports are based on signalling interactions of the Switching Function. Many Connection events are of interest to CSTA applications. Typically, however, a CSTA application is interested in atomic telecommunications activities and these often involve many simultaneous Connection events. Generally, telecommunications operations embody changes to many Connections. These events can be summarized in a single Event Report. For instance, the Transfer, Conference and Clear Call Services all make changes to multiple Connections but are each represented by single Event Reports. The Connection state changes associated with each CSTA Event Report are defined in this Standard.

6.1.4 Call State Definitions

The state of a CSTA Call can be precisely expressed as the list of Connection states of all the devices involved in the call. This list is called the Compound Call State. The technique of listing the Connection states to describe the Call state can describe any call state that is possible in CSTA. However, most calls involve a small number of widely recognized states. CSTA defines those states in terms of their set of Connection states, but communicates them as atomic Call states - not as a list. These widely recognized states are called the Simple Call States.

For calls with one known Connection state, the single Connection state shall be provided as a Call state.

Note that since Null can be a known Connection state, for a nascent call it is possible to have a CSTA Call state with only one non-Null Connection (see Table 6-5).

For calls with more than two non-Null Connection states, the list of Connection states is provided as the call's state.

CSTA simplifies Call states by relating them (at times) to particular devices. These relationships are described by differentiating the call's Connection states. The Connection state associated with a particular device is called the local Connection state (for that device). Other Connection states are not differentiated from one another. Thus, CSTA Call state is defined for a device by the combination of Connection states as well as the order in which the Connection states are combined. For example, the Alerting-Connected Call state is not the same as Connected-Alerting. The first is defined as Received and the second is defined as Delivered. For calls with

© ISO/IEC 2007 – All rights reserved

Copyright International Organization for Standardization
Provided by IHS under license with ISO
No reproduction or networking permitted without license from IHS
Not for Resale

exactly two Connections, the CSTA Call state assigned to the combinations of Connection states are summarized in the following table. If there is no Simple Call state for a particular combination of Connection states, then a Compound state shall be provided as the Call state. For Compound Call states, the first Connection state in the list shall be the local Connection state.

Table 6-5 Definition of CSTA Simple Call States

Local Connection State	Other Connection State	CSTA Simple Call State
Alerting	Connected	Received
Alerting	Hold	Received-On Hold
Connected	Alerting	Delivered
Connected	Connected	Established
Connected	Failed	Failed
Connected	Hold	Established-On Hold
Connected	Null	Originated/Terminated
Connected	Queued	Queued
Failed	Null	Blocked
Hold	Alerting	Delivered-Held
Hold	Connected	Established-Held
Hold	Failed	Failed-Held
Hold	Queued	Queued-Held
Initiated	Null	Pending
Null	Null	Null

NOTE The Originated / Terminated state may occur both during call set-up and when the call ends. When a far-end party drops from a two-party call and the near-end end-point is not returned immediately to idle, then the Originated / Terminated state is entered for call tear-down. It is also possible to enter a blocked state when a call ends.

6.1.5 Referencing Devices, Elements, Appearances and Device Configurations

In services and events, devices, elements, appearances and device configurations are referenced using Device Identifiers or Connection Identifiers when a call is present at the device, element, or appearance. Table D-1 indicates how these Device Identifier references are interpreted. The Connection Identifier references are described in 6.1.3, “Connection”, and when a Connection Identifier is used it refers to the specific device, element or appearance associated with the given call. The following symbols are used in the table:

Logical This indicates that the Device Identifier passed will be interpreted as reference to a specific logical element.

Physical This indicates that the Device Identifier passed will be interpreted as reference to a specific physical element.

Device This indicates that the Device Identifier passed will be interpreted as reference to the entire device configuration.

Appearance This indicates that the Device Identifier passed will be interpreted as reference to a specific addressable appearance of a logical element. In order for computing function to determine what type of referencing is supported for a given logical element, it shall use the capability exchange services (13.1 beginning on page 149).

© ISO/IEC 2007 – All rights reserved

Copyright International Organization for Standardization
Provided by IHS under license with ISO
No reproduction or networking permitted without license from IHS Not for Resale

Refer to 10.1, “Device Identifier Formats”, for the format of Device Identifiers.

Table 6-6 Device Identifier Interpretation

Service/ Event Categories	Identifier Represents	Additional Information
Call Control, Call Associated, Media Service and Routeing Services	Device	The device (configuration) itself selects which appearance is to be used.
	Appearance	The Device Identifier selects the specific appearance which is to be targeted by the service.
Call Control, Call Associated and Media Service Events, as well as switching function to computing function	Device	The Device Identifiers that are associated with an appearance identify only the associated device configuration rather than a specific appearance. Note that this information relates to the content of the event parameters, not what is supplied on the Monitor Start service.
	Appearance	The Device Identifier selects the specific appearances which are being reported in the event. Note that this information relates to the content of the event parameters, not what is supplied on the Monitor Start service
Logical Device Services	Logical	The Device Identifier refers to the particular logical element.
Logical Device Events	Logical	The content of the event parameters indicates the given logical element being used. Not that this information relates to the content of the event parameters, not what is supplied on the Monitor Start service.
Physical Device Services	Physical	The Device Identifier shall refer to the particular physical element.
Physical Device Events	Physical	The content of the event parameters indicates the given physical element being used. Note that this information relates to the content of the event parameters, not what is supplied on the Monitor Start service.
Device Maintenance Events	Device	The event parameter contains the Device Identifier of the device configuration.
Monitor Start Service (Call Control/ Associated, and Media Service events)	Device or Logical	The Device Identifier of the device configuration (Device) results in the observation of the entire configuration. The Device Identifier of the particular logical element (Logical) results in the observation of the entire logical element. Note that the event filter determines the types (logical or device) of the events required. The Switching Function interprets the Device Identifier to meet the requirements of the filter. This may result in the same Device Identifier being interpreted as both Device and Logical for different event categories.
	Appearance	The use of the Device Identifier results in the observation of the specific appearance.
Monitor Start Service (Logical Device events)	Logical	The use of the Device Identifier results in the observation of the particular logical element.
Monitor Start Service (Physical Device events)	Physical	The use of the Device Identifier results in the observation of the particular physical element.

Logical = logical element’s Device Identifier

Physical = physical element’s Device Identifier
Appearance = addressable appearance (can be recognised from other forms of Device Identifiers by the suffix)

Device=a Device Configuration formed by multiple devices, which is referenced by the Device Identifier

© ISO/IEC 2007 – All rights reserved

Copyright International Organization for Standardization
Provided by IHS under license with ISO
No reproduction or networking permitted without license from IHS
Not for Resale

Table 6-6 Device Identifier Interpretation (continued)

Service/ Event Categories	Identifier Represents	Additional Information
Monitor Start Service (Device Maintenance events)	Device	The use of the Device Identifier results in the observation of the device configuration.
Snapshot Services	Logical	The Device Identifier refers to the particular logical element.
Logical = logical element's Device Identifier Physical = physical element's Device Identifier Appearance = addressable appearance (can be recognised from other forms of Device Identifiers by the suffix) Device=a Device Configuration formed by multiple devices, which is referenced by the Device Identifier		

6.1.6 Management of Dynamically-Assigned Identifiers

Management of dynamically-assigned Device Identifiers and Call Identifiers is provided through management of Connection Identifiers. This ensures that an identifier whose meaning is dependent on another identifier is always provided in the proper context (i.e., with the other identifier needed to resolve its meaning). For example if a Call Identifier is given relative to a device, then giving the Connection Identifier ensures that the Call Identifier is provided with its reference - the Device Identifier. Management of Connection Identifiers shall be provided as follows.

Connection Identifiers shall be provided when either a new call is created or a new device becomes involved in a call. When a call is made a Connection Identifier shall be provided. A Connection Identifier shall be provided in Event Reports that pertain to a call. When a device becomes involved in a call, the Connection Identifier shall be provided in the Event Reports that occur at that device.

If a call changes its Call Identifier when a Conference or Transfer occurs, Connection Identifiers shall be provided to link the old Call Identifier to the new Call Identifier. Similarly, if a Device Identifier is changed, new Connection Identifiers shall be provided for the devices in the call.

Management of identifiers shall be provided via parameters included in Service acknowledgements and Event Reports.

Identifiers shall cease to be valid when their context vanishes. If a call ends, its Call Identifier is no longer valid to refer to that call. Similarly, if a device is removed from service or from a call, its dynamically-assigned Device Identifier shall become invalid.

Identifiers can be reused. Once an identifier has lost its context it may be re-used to identify another object. It is recommended that implementations not re-use identifiers immediately.

Individual Call and Device Identifiers are not guaranteed to be globally unique. CSTA requires that the combination of Call and Device Identifier be unique within a CSTA switching sub-domain. To accomplish this, either the Call Identifier, or the Device Identifier (or both) shall be unique. In many cases the Connection Identifier requires both the Call and Device Identifiers to uniquely refer to Connections in a call.

6.2 I/O Services

I/O-Services support the exchange of data between a computer application (a computing function component) and a telephony device (to send Data from the computer application to the display of a telephony device, or to send Data from the keypad of a telephony device to the computer application, etc.).

NOTE Both the I/O Services and the Physical Device Features provide the capability to write to the display of a device and to detect keypad activity at a device. The primary difference between these two approaches is that the I/O services operate within the context of a data path, which is described below.

© ISO/IEC 2007 – All rights reserved

Copyright International Organization for Standardization
Provided by IHS under license with ISO
No reproduction or networking permitted without license from IHS Not for Resale

The I/O-Services are defined as a distributed application between the switching function and the computing function. The special resource function is not involved.

Figure 6-26 I/O Services Functional Architecture

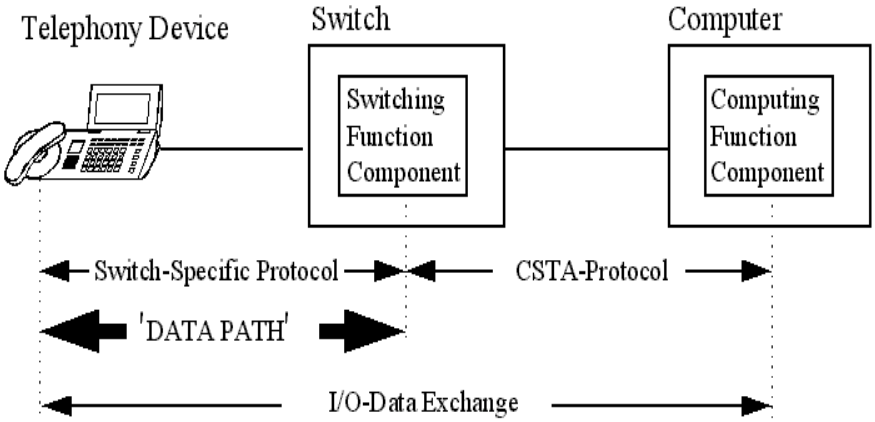

Figure 6-26 shows that the exchange of data between a telephony device and a computer application consists of two parts:

1. the exchange between the switching function component and the computing function component, provided by the CSTA-Protocol.
2. the exchange between the telephony device and the switching function component, provided by a switch-specific protocol.

6.2.1 Data Path Definition

To allow computer applications to cooperate with a switch-specific protocol (see Figure 6-26), a common view (the data path) is defined:

- The data path is an abstract model of a switch-specific protocol/mechanism.
- The data path is a logical object in the switching function that allows the exchange of data between a telephony device and a switching function component for a given application association.
- The computing function component is able to control the data path via the I/O-Services.
- The computing function component is also informed via the I/O-Services when an entity in the switching function controls the data path.
- The data path ends in the switching function component, it is not part of the CSTA-link between the switching function component and the computing function component.
- The switching function component is a gateway between the data path and the CSTA link:
    - It receives CSTA service requests from the computing function component to control the data path (via the Start Data Path, Suspend Data Path, Resume Data Path, and the Stop Data Path services) and activates the equivalent switch-specific protocol-mechanisms (and vice versa, including the Data Path Suspended/Resumed services).
    - It receives data (via the Send Data, Send Multicast-Data, Send Broadcast-Data, and the Fast Data services) from the computing function component and sends this data through the data path (via a switch-specific protocol) to the target device (and vice versa, but only via the Send Data and Fast Data services).

© ISO/IEC 2007 – All rights reserved

Copyright International Organization for Standardization
Provided by IHS under license with ISO
No reproduction or networking permitted without license from IHS
Not for Resale

6.2.2 I/O Registration Services

The I/O registration services registers the computing function as an I/O server for a specific device or for all devices within the switching sub-domain.

If the switching function supports the I/O Registration services, then the computing function shall use the I/O Register service to register for I/O services before it can receive any I/O service requests over switching function requested data paths.

Note that an I/O registration is not applicable when a data path is initiated by the computing function (i.e., a computing function can initiate a I/O data path after an I/O registration but the ioRegisterReqID parameter is not provided in the I/O services related to a data path that has been initiated by the computing function).

6.2.3 Data Path States and Operational Model

The following data path states are defined in the I/O Services Operational Model:

Null No relation between a data path and a telephony device. No I/O Cross Reference Identifier is defined.

Open The data path is able to transfer data (direction is defined in the Start Data Path service). An I/O Cross Reference Identifier is defined.

Suspended The data path is not able to transfer Data. The relation to a telephony device still exists, the I/O Cross Reference Identifier is still valid.

Figure 6-27 Data Path State Model

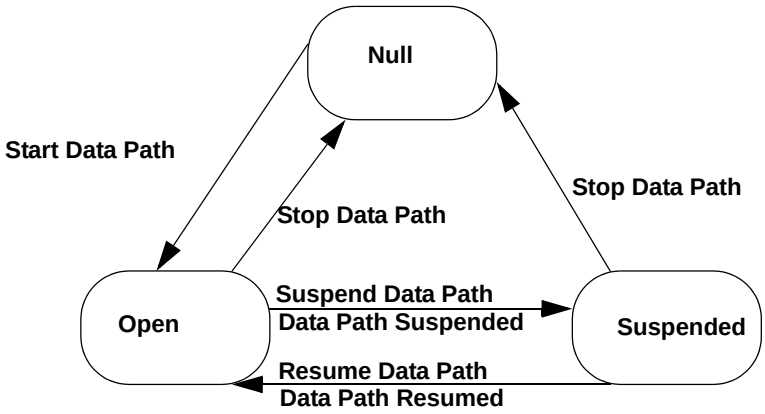

6.2.4 I/O Services Example

The following figure illustrates a possible CSTA configuration involving a data path from/to a CSTA object through the switching function.

The data path is established via the Start Data Path service issued, in this example, by the computing function.

If the switching function temporarily stops (suspends) the data flow (without destroying the data path), it informs the computing function via the Data Path Suspended service.

The switching function might have suspended the data path because it had received a Suspend Data Path service from the computing function or it may have suspended the data path without such a request from the computing function (because of an incoming call at the device, for example).

© ISO/IEC 2007 – All rights reserved

Copyright International Organization for Standardization
Provided by IHS under license with ISO
No reproduction or networking permitted without license from IHS
Not for Resale

Figure 6-28 I/O Services Example

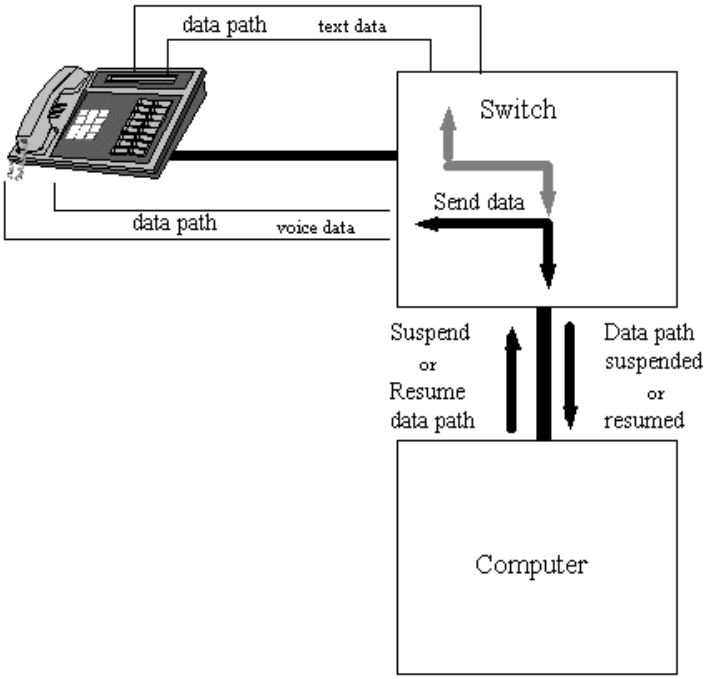

6.3 Call Detail Record (CDR) Services

Call Detail Record (CDR) Services allow access to information regarding call details that has been collected, processed and/or stored by the switching function. This information may include detailed call charges, destination, bill-to-account, authorization codes, etc. This information may be provided in real-time (i.e., immediately after the conclusion of a call) or in batch mode.

6.3.1 CDR Services Examples

Figure 6-29 illustrates the flow of CDR services when they are used to collect call detail information after every call. In this example, the computing function issues a Start Call Detail Report Transmission service and specifies that the switching function should send call detail information after every call by specifying the transferMode parameter as transferAtEndOfCall (line 1). The switching function responds with a positive acknowledgement (line 2) that includes a CDR cross reference identifier (with a value of 5) which will be present in subsequent CDR services.

Line 3 shows a call, called c1, that was cleared. Since the switching function is sending call detail information after every call, the switching function sends the call detail information for call c1 using the Call Detail Record Report service (line 4), which is acknowledged by the computing function (line 5). Lines 6 through 8 show the same sequence for another call, called c2.

When the computing function is no longer interested in CDR information, it stops the reporting by using the Stop Call Detail Report Transmission service, specifying the CDR cross reference identifier with a value of 5 (line 9).

© ISO/IEC 2007 – All rights reserved

Copyright International Organization for Standardization
Provided by IHS under license with ISO
No reproduction or networking permitted without license from IHS
Not for Resale

Figure 6-29 CDR Services Example: Call Details "After Every Call"

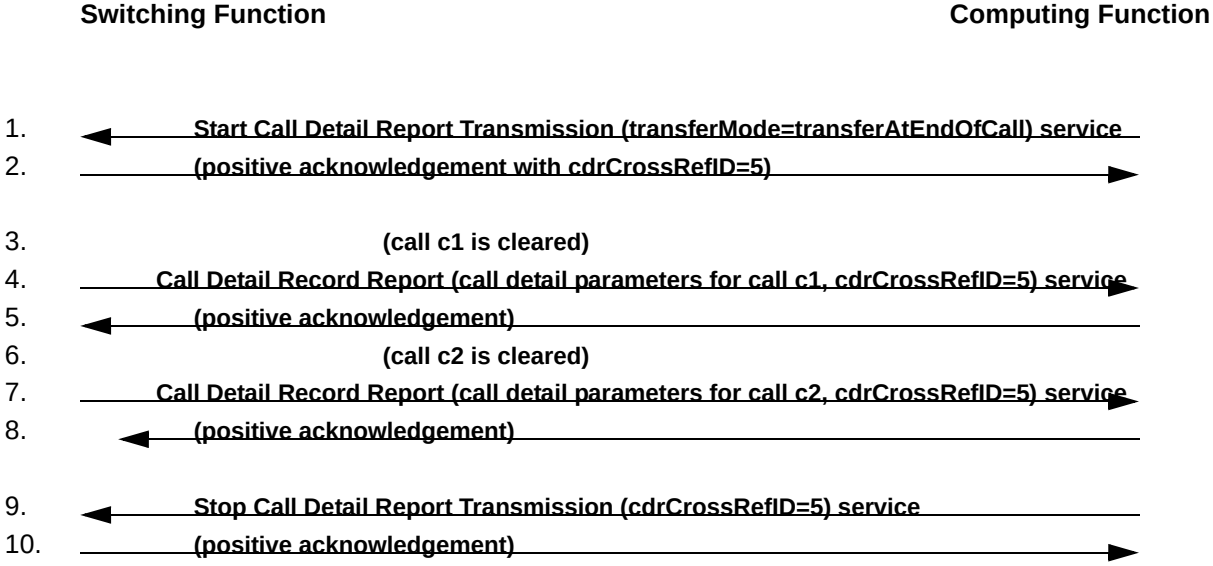

Another example as shown in Figure 6-30 illustrates the flow of CDR services when they are used to collect call detail information and retrieved at the request of the computing function.

In this example, the computing function issues a Start Call Detail Report Transmission service and specifies that the switching function should store call detail information (until explicitly requested by the computing function) by specifying the transferMode parameter as transferOnRequest (line 1).

Lines 3 and 4 show two calls in the switching function that were cleared. Since the switching function is not sending call detail information after every call, the switching function stores the CDR information instead of sending it at this time. When the computing function wants the CDR information, it sends the Send Stored Call Detail Records service (line 5) that requests the switching function to start sending its stored CDR records. The switching function sends its two stored reports for calls c1 and c2 via a Call Detail Record Report service (line 7).

Line 9 shows that the switching function has stored CDR information for a number of calls. Since the computing function has not requested CDR information to be sent during this period, the switching function has used the Call Detail Records Notification service to indicate that a threshold reached condition has occurred in the switching function (line 10). The computing function uses the Send Stored Call Detail Records service to start the transmission of CDR information from the switching function (line 12). The switching function sends a series of Call Data Record Report services that provides the stored CDR information (lines 14 & 16).

© ISO/IEC 2007 – All rights reserved

Copyright International Organization for Standardization
Provided by IHS under license with ISO
No reproduction or networking permitted without license from IHS
Not for Resale

Figure 6-30 CDR Services Example: Call Details "On Request"

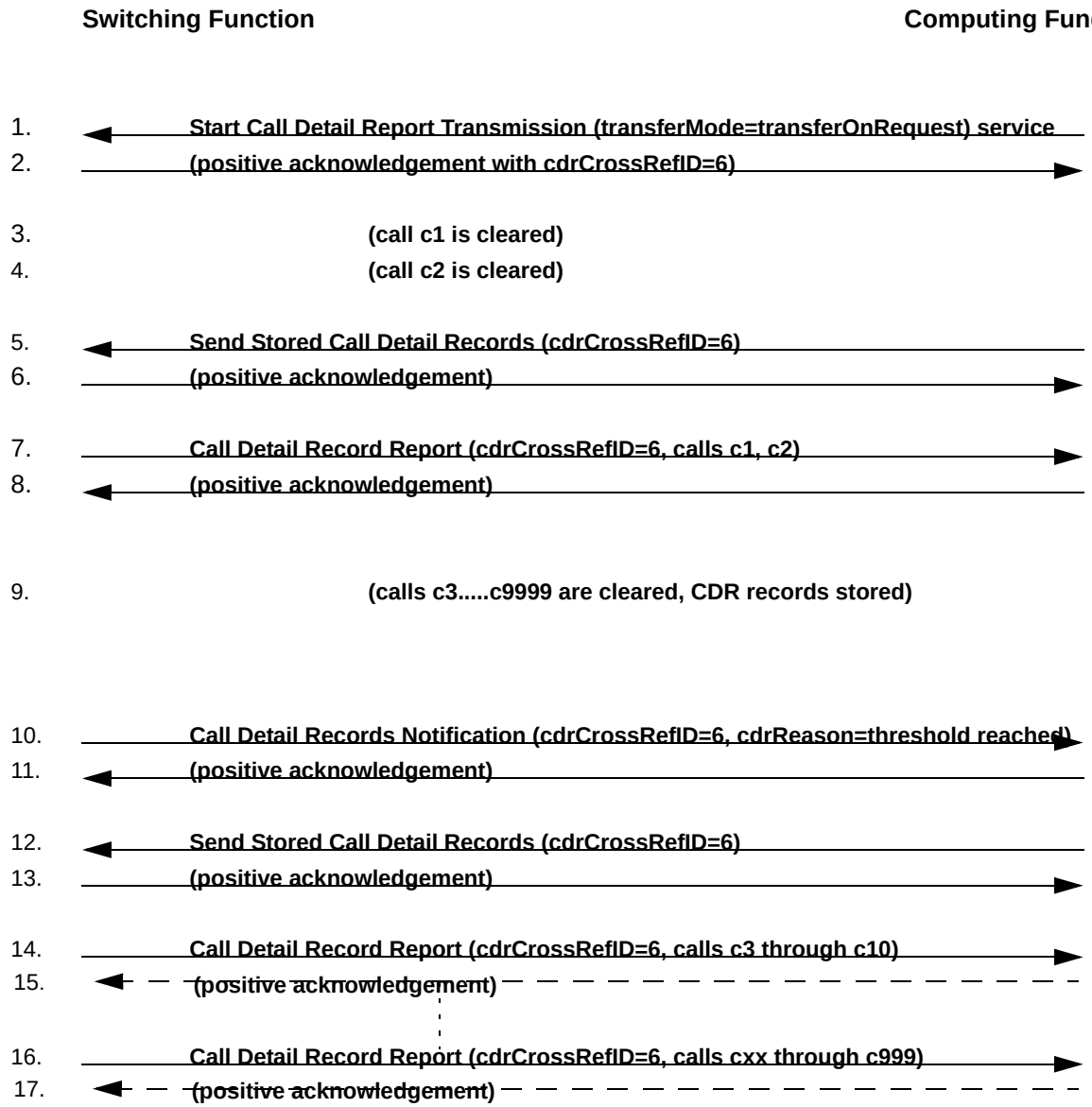

6.4 Capabilities Exchange

The concept of capability exchange is one in which the switching function informs the computing function, through the service boundary, about the characteristics of its sub-domain in relationship to the operational model and feature definitions. This enables the computing function to use the services of the switching function based on its characteristics.

This exchange shall be performed before the computing function can control and/or observe any device in the switching sub-domain but not before the switching function has reported its system status (i.e., the System Status service).

There are two levels of capability exchange available to the computing function: *switching function* and *device specific capabilities*.

© ISO/IEC 2007 – All rights reserved

Copyright International Organization for Standardization
Provided by IHS under license with ISO
No reproduction or networking permitted without license from IHS
Not for Resale

6.4.1 Switching Function Capabilities

The first level is the capabilities for the switching function. These capabilities represent the set of all capabilities within the switching function. The Get Switching Function Capabilities can be used to obtain the entire set of all capabilities within the switching function. The Get CSTA Features service can be used if only the list of supported services and events are needed.

The list of devices that can be controlled and/or observed within the switching sub-domain can be obtained by using the Get Switching Function Devices service. This service causes the switching function to send one or more Switching Function Devices service(s) that contain the list of devices and optionally the device type, device name, and other information associated with each device.

6.4.2 Device Capabilities

Even though the Get Switching Function service gives the computing sub-domain most of the information to properly use the capabilities of the switching function, this information is sometimes not enough to totally understand the unique capabilities of a given device in relationship to the operational model or feature. Thus, another level of capability exchange exists which allows the computing function to obtain the specific capabilities associated with a given device or device configuration. This level of information is needed to better understand capabilities for an individual device. These specific device capabilities are obtained by using the following services (in any order):

- Get Physical Device Information service
- Get Logical Device Information service

The ability to use these services depends on whether or not the switching function actually supports these services. The computing function obtains this information from the Get Switching Function Capabilities service.

6.4.2.1 Physical Device Capabilities

This Get Physical Device Information service is used to obtain most of the capabilities and configuration information associated with the physical element of a device. To obtain the rest of the physical element characteristics, the computing function shall use the Get Button Information, Get Lamp Information, Get HookSwitch Status, Get Ringer Status, and Get Auditory Apparatus Information services to obtain all of the information associated with the device's lamps and buttons. This information is used when controlling or observing the physical element of the device.

If the service indicates that the device has logical characteristics, the Get Logical Device Information service may be used for all associated logical elements.

If the service is used on a device that does not have any physical characteristics the service shall be rejected.

6.4.2.2 Logical Device Capabilities

The Get Logical Device Information service is used to obtain the capabilities and configuration information associated with the logical element of a device. This information is used when controlling or observing the logical element of the device.

If the service indicates that the device has physical characteristics, the Get Physical Device Information service may be used for all associated physical elements.

If the service is used on a device that does not have any logical characteristics the service shall be rejected.

6.4.3 Dynamic Feature Availability

A computing function can determine all possible CSTA services that can be applied to a connection given its state by using static information obtained through the Capability Exchange services. However, in certain

© ISO/IEC 2007 – All rights reserved

Copyright International Organization for Standardization
Provided by IHS under license with ISO
No reproduction or networking permitted without license from IHS
Not for Resale

implementations, there are situations where the set of services that can be applied to a connection varies depending upon how the connection got to a certain connection state and/or certain features active at a given device. In these cases, the static information provided in the Capability Exchange services may not reflect the actual set of services that are allowed.

If the Dynamic Feature Availability option is supported (as indicated through the Capability Exchange services), the actual set of CSTA services that can be applied to a connection at a given point is provided through the servicesPermitted parameter in every appropriate event.

Refer to 12.2.22, “ServicesPermitted”, on page 134 for a description on the use and restrictions of this parameter.

6.5 Switching Function Information Synchronization

Since the information obtained through the capability exchange services and call events may change after the information has been obtained, this Standard defines mechanisms that may be used to notify and provide the computing function with the updated information. This allows synchronization to be maintained with switching function information.

6.5.1 Switching Function Level Information

The following list describes how the computing function is notified when switching function level information has been changed.

- *switching function capabilities* - The Switching Function Capabilities Changed service is used to notify the computing function when information contained within the positive acknowledgement of the Get Switching Function Capabilities service has changed. The computing function shall issue the Get Switching Function Capabilities service to get the current information.
- *switching function devices* - The Switching Function Devices Changed service is used to notify the computing function when information contained within the Switching Function Devices service has changed. The computing function shall issue the Get Switching Function Devices service to get the current information.

6.5.2 Device Level Information

The following list describes how the computing function is notified when device level information has been changed.

- *device capabilities* - The Device Capabilities Changed event is used to notify the computing function when information contained within the positive acknowledgement of the Get Physical Device Information and/or Get Logical Device Information services has changed. The computing function shall then issue the appropriate Get Physical Device Information and/or Get Logical Device information services to get the current information.

6.5.3 Call Level Information

The following list describes how the computing function is notified when call level information has been changed.

- *account information and authorisation code* - The accountInfo and the authorisationCode parameters in the Call Control events represents the current account information and authorization code. In the situation where this information has changed independently of call activity (manual entry or via the Associate Data service, for example), the Call Information event is used to notify the computing function of the updated value.

© ISO/IEC 2007 – All rights reserved

Copyright International Organization for Standardization
Provided by IHS under license with ISO
No reproduction or networking permitted without license from IHS
Not for Resale

- *calling device* - The callingDevice parameter in the Call Control events represents the calling device associated with the call. In the situation where this information was originally unknown and has now become available, the Call Information event is used to notify the computing function of the updated value.
- *dynamic feature availability* - The servicesPermitted parameter in the Call Control events represents the set of services that can be applied to a connection. In the situation where the servicesPermitted parameter changes due to another call's connection changing state, the Call Information event is used to notify the computing function of the updated capabilities for the connection that did not change state.
- *User Data and Correlator Data* - The userData and the correlatorData parameters in the Call Control events represents the current values of User Data and Correlator Data. In the situation where this information has changed independently of call activity (Send User Information or Associate Data services, for example), the Call Information event is used to notify the computing function of the updated values.

6.6 Status Reporting Services

Note that this section describes the Status Reporting services between the Switching Function and the Computing Function.

6.6.1 System Status

System Status services provide a way for the computing function and switching function to exchange information about the overall status of the system within each function. For each service boundary in a CSTA environment, the computing function and switching function on each side maintain a status attribute. System status services are bi-directional, enabling the computing function to report its status to the switching function, or to request the status of the switching function, and vice-versa.

6.6.1.1 System Status Registration

Before the computing function can receive any system status service requests, it may be required to register with the switching function for system status services using the System Status Register service. The positive acknowledgement to this service contains the system status register identifier (sysStatRegisterID) that the computing function uses to identify service requests that arrive for this registration.

If the switching function supports the System Status Registration services, then the computing function shall use the System Status Register service to register for system status services before it can receive any system status service requests. The first (mandatory) System Status service request from the switching function issued during an initialization sequence is an exception to this rule, however. If the switching function does not support the System Status Registration services, then the computing function may receive system status service requests at any time. The capabilities exchange services can be used to determine if the switching function supports the System Status Registration services.

The type of system status service requests that apply to the registration can be chosen by the computing function when it issues the System Status Register service request. A status filter can also be specified such that only the status's of interest to the computing function will be reported by the switching function (i.e., if the bit for a status is set in the status filter, then that status is not reported). This filter can be changed using the Change System Status Filter at any time while the registration is active.

A system status registration can be cancelled using the System Status Register Cancel service. Once the switching function sends a positive acknowledgement to this service, it will no longer send system status service requests to the computing function. Additionally, the switching function can cancel a system status registration at any time by sending the computing function a System Status Register Abort service request.

While the system status services themselves are bi-directional, the System Status Registration services are not. These services are only issued by the computing function. The switching function does not register with the computing function for system status services. The switching function is considered to be (implicitly) registered to receive system status service requests from the computing function at any time.

© ISO/IEC 2007 – All rights reserved

Copyright International Organization for Standardization
Provided by IHS under license with ISO
No reproduction or networking permitted without license from IHS
Not for Resale

6.6.1.2 System Status Services

There are four System Status Services: System Status, Request System Status, Switching Function Capabilities Changed, and Switching Function Devices Changed. The first service is used by the requesting function to report its status to the function receiving the service request. The second service is used by the requesting function to request (i.e., query) the status of the responding function. The last two services are used to notify the computing function that switching function level information has changed (6.5.1, “Switching Function Level Information”, on page 63).

The computing function can determine if the switching function uses the System Status service for periodic status reporting (i.e., heartbeats) using the capabilities exchange services. The Get Switching Function Capabilities service positive acknowledgement defines a parameter (systemStatusTimer) that is used to indicate whether periodic status reporting is used and if so, how often the computing function should expect the reports. The recovery action to be taken by the computing function in the event of a loss of heartbeats is implementation specific.

All System Status services use the following values to indicate system status:

- *Initializing* - The system is re-initializing or restarting. This status indicates that the system is temporarily unable to respond to any service requests. If provided, this status message shall be followed by an Enable status message that indicates that the initialization process is completed.
- *Enabled* - Request and responses are enabled, usually after a disruption or restart. This status indication shall be sent after an Initializing status indicator has been sent and may be sent under other conditions. This status indicates that there are no outstanding monitor requests.
- *Normal* - This value can be sent at any time to indicate that the status is normal. This status has no effect on other services.
- *Messages Lost* - This status indicates that a service request, response, or event report may have been lost.
- *Disabled* - This cause value indicates that active Monitor Start monitor requests have been disabled. Other requests and responses may also be disabled, but, unlike monitors, reject responses are provided for those.
- *Partially Disabled* - Some of the objects in the system can not be reached. Existing monitors on these objects will not provide events and computer requests targeting these objects will be rejected. This cause indicates to the receiving function that a degradation of service level may occur but not complete system disability. Automatic or manual actions may be taken to remedy the parts disabled.
- *Overload Imminent* - The system is about to reach an overload condition. The client should shed load to remedy the situation.
- *Overload Reached* - The system has reached an overload condition and may take action to shed load. The server may then take action to decrease message traffic. This may include stopping existing monitors or rejecting any new requests sent by the client.
- *Overload Relieved* - The system has determined that the overload condition has passed and normal application operation may resume.

Each system status service request may contain a system status registration identifier (sysStatRegisterID) to identify the associated system status registration (when system status registration is supported by the switching function). A system status service request from the computing function should never contain a system status registration identifier.

6.6.2 Monitoring

To track call control and other activity, and to receive notification of all changes in the switching Function, the computing function uses a feature called monitoring. By starting a monitor, the computing function indicates

© ISO/IEC 2007 – All rights reserved

Copyright International Organization for Standardization
Provided by IHS under license with ISO
No reproduction or networking permitted without license from IHS
Not for Resale

that it wants to be notified of specific changes that occur in the objects (call and device) and device attributes of a switching function. Examples include:

- Notification that a call has arrived at a device.
- Notification that a call has been answered.
- Notification that a feature such as “Forwarding” or “Do Not Disturb” has changed at a device.

Once a monitor is established, the switching function notifies the computing function of relevant activity by sending messages called *event reports,* or simply *events*.

For example, in the area of Call Control, events report the state transitions through which connections pass. In this way a computing function is able to determine what services are applicable to a given connection. For example, the Delivered event indicates when a connection state transits to the Alerting state.

The event categories are as follows:

- *Call Control* - These events report changes to information related to calls.
- *Call Associated* - These events report changes to information related to calls.
- *Media Stream* - These events report changes associated with attachment of a call to a media device.
- *Physical Device* - These events report changes to the components of a device's physical element.
- *Logical Device* - These events report changes to feature settings associated with a device's logical element(s).
- *Voice* - These events report changes to Voice Unit messages and Interactive Voice devices.
- *Maintenance* - These events report changes regarding maintenance.
- *Private* - These events are switching function specific.

6.6.2.1 Starting and Stopping a Monitor

The Monitor Start service is used to establish a monitor. The computing function indicates the monitor object that it is interested in observing, the type of monitoring, the type of calls to monitor, and the list of events that it is interested in.

Once the Monitor Start service request has been validated by the switching function, the switching function provides a positive acknowledgement that includes a Monitor Cross Reference Identifier that uniquely identifies the monitor. The switching function also provides this identifier as a parameter in all events associated with this monitor. The computing function can use this identifier to correlate events to the particular Monitor Start service that established the monitor. (This identifier is also used in the Monitor Stop and Change Monitor Filter services.)

The Monitor Stop service is used to stop an established monitor. When a Monitor Stop service has been sent by the computing function, the switching function stops the monitor, releases the Monitor Cross Reference Identifier, and no longer provides events to the computing function.

The Monitor Stop service may also be sent from the switching function to the computing function when the switching function stops an existing monitor. This occurs when the monitor object is a call-object (Table D-1), or when the switching function shall terminate a monitor due to load conditions, for example.

Refer to 15.1 beginning on page 198 for a complete description of the Monitor Start and Monitor Stop services.

6.6.2.2 Monitor Objects

The computing function indicates what it wants to monitor by specifying a monitor object parameter in the Monitor Start service request. There are two possible monitor objects: *call-object* and *device-object*.

© ISO/IEC 2007 – All rights reserved

Copyright International Organization for Standardization
Provided by IHS under license with ISO
No reproduction or networking permitted without license from IHS
Not for Resale

The following table describes the monitor objects.

Table 6-7 Monitor Objects

Monitor Object	Description
call-object	Place a monitor on an existing call/connection. Only the specific call is monitored. A Monitor Stop service is sent by the switching function to indicate when the existing call is no longer monitored.
device-object	Place a monitor at the specified device. The device may represent a single device (e.g. station) or may represent a group device (e.g. hunt group).

6.6.2.3 Monitor Types

The computing function also indicates a monitor type when starting a monitor. There are two types of monitoring: *call-type* and *device-type*.

The following table describes the possible monitor types and their meanings.

Table 6-8 Monitor Types

Monitor Type	Description
call-type	The call continues to be monitored as long as it remains in the switching sub-domain. For example, if a call that is being call-type monitored is transferred to another device in the switching sub-domain, the call will continue to be monitored. The computing function receives events for all devices in the call until the call ceases to exist or until it leaves the switching sub-domain. The Diverted event is an exception. The switching function (as indicated through the capabilities exchange services) may or may not be providing Diverted events to all devices in a call. For call-type monitors: • When a device ceases to participate in a call, and the call is transferred or forwarded to another device, subsequent events at the new device are reported. The Monitor Cross Reference Identifier used in events at the new device will be the same one used before the call was forwarded or transferred. • If a call is being monitored using a call-type monitor and one of the devices consults to another device (i.e. a new call is created), then the computing function will not see events for the secondary call (new consultation call) until either the primary call is transferred to the consulted device, or until the two calls are conferenced together. • A call that is being monitored may have a new Call Identifier assigned to it after a conference or transfer. The switching function reports the new Call Identifier in a Conferenced or Transferred event.
device-type	The call does *not* continue to be monitored after the call leaves the device.

6.6.2.4 Relationship of Monitor Objects and Monitor Types

Monitor objects and monitor types are independent. A *monitor object* describes what the monitor is being placed on, while the *monitor type* describes if a call continues to be monitored after it leaves a device.

--`,,```,,,,````-`-`,,`,,`,`,,`---
© ISO/IEC 2007 – All rights reserved

Copyright International Organization for Standardization
Provided by IHS under license with ISO
No reproduction or networking permitted without license from IHS
Not for Resale

The following table describes the possible combinations of monitor objects and monitor types and what the resulting combinations represent.

Table 6-9 Monitor Object/Monitor Type Combination

Monitor Object	Monitor Type	Usage
call-object	call-type	This combination is used to track an existing call, for as long as that call remains in the switching sub-domain. Monitor Stop service is sent by the switching function when the call ceases to exist in the switching sub-domain to indicate that the monitor is stopped and the associated Monitor Cross Reference Identifier is no longer valid.
call-object	device-type	This combination is used to track an existing call, while that call remains at the specified device. Monitor Stop service is sent by the switching function when the call leaves the device to indicate that the monitor is stopped and the associated Monitor Cross Reference Identifier is no longer valid.
device-object	call-type	This combination is used to track all calls that arrive (or are present) at the device, for as long as the calls remain in the switching sub-domain. The specified device object can be thought of as a trigger device where all calls that become involved with this device become monitored as long as the call remains in the switching sub-domain. Monitor Stop service is *not* sent by the switching function when a call ceases to exist or moves away from the monitored device, since the monitor is still in place at the device.
device-object	device-type	This combination is used to track all calls that arrive (or are present) at the device, for as long as the calls remains at the device. Monitor Stop service is *not* sent by the switching function when a call ceases to exist or moves away from the monitored device, since the monitor is still in place at the device.

6.6.2.5 Monitoring in Relationship with Media Class

The computing function can also indicate the media class (voice, digital data, etc.) of calls to be monitored when starting a monitor.

Refer to the media class component of 12.2.18, “MediaCallCharacteristics”, on page 130 for the complete set of possible values. The media class is independent of the monitor object and monitor type.

6.6.2.6 Reporting Connection State Changes

Once a call is monitored (irrespective of monitor type or monitor object), all connection state changes that are known by the switching function for that call are reported to the computing function (subject to the Monitor Filter—refer to C).

For example, if device A is being monitored (with a device-type monitor) and a call is placed to device B (no monitor on B), then any connection state changes for either device A or B (such as when B answers the call) will be reported through device A’s monitor.

Monitoring is only guaranteed for devices in the switching sub-domain. Activity related to devices outside the switching sub-domain may be only partially available or completely unreported.

6.6.2.7 Monitor Filtering

The computing function can request that a set of events be filtered out (not sent) by the switching function. This information is specified in the monitorFilter parameter in the Monitor Start service request.

--`,,```,,,,````-`-`,,`,,`,`,,`---
© ISO/IEC 2007 – All rights reserved
Copyright International Organization for Standardization
Provided by IHS under license with ISO
No reproduction or networking permitted without license from IHS
Not for Resale

The monitorFilter parameter contains a list of filters that are grouped together into the following categories:

- Call Control events
- Call Associated events
- Media Stream events
- Physical Device Feature events
- Logical Device Feature events
- Maintenance events
- Voice events
- Private events

The switching function indicates the actual list of events that will be sent by returning the monitorFilter parameter in the positive acknowledgement to the Monitor Start and Change Monitor Filter services.

The computing function can request that the filtered list of events for an existing monitor be changed by issuing the Change Monitor Filter service.

Some categories of events are not provided for call-type monitors. The capability exchange services indicate the categories of events that are supported by the switching function for call-type monitors.

6.6.3 Snapshot Services

Snapshot services are used by the computing function to determine information about a call or a device. These services may be used at any time, independently of, or in combination with existing monitors. For example, a computing function may snapshot a device prior to starting a monitor on the device, in order to obtain information on existing calls at the device.

6.7 Additional Services, Features & Behaviour

This section specifies standardized switching function features affecting calls at a given device that do not have an explicit service request associated with the invocation of the feature. These features are usually configured within the switching function or have a service request which sets up certain conditions at a device that causes a particular behaviour with respect to calls at the device. As a result, these features are only reflected through an event sequence from the switching function. The following sections explain these features and the event sequences associated with them.

6.7.1 Forwarding

The forwarding feature is a trigger at a device that will redirect incoming calls to another device based on a specific condition. The following are the types of conditions that would trigger the redirection, or forwarding of the incoming call:

1. *Immediate* - This condition indicates that if a call arrives at a device, it is immediately redirected to another device.
2. *Busy* - This condition indicates that if a call arrives at a device, and the device is busy with another call, then the incoming call will be redirected to another device.
3. *No Answer* - This condition indicates that if a call arrives at a device, and the call is not answered within a certain number of rings or within a specific amount of time, then the incoming call will be redirected to another device.
4. *Do Not Disturb (DND)* - This condition indicates that if a call arrives at a device, and the device has the Do Not Disturb feature active at the device, then the incoming call will be redirected to another device. Note that the Do Not Disturb feature does not necessarily imply that incoming calls are forwarded.

© ISO/IEC 2007 – All rights reserved

Copyright International Organization for Standardization
Provided by IHS under license with ISO
No reproduction or networking permitted without license from IHS
Not for Resale

5. *Type of Call Origination* - This condition indicates that if a call arrives at a device, and the originating device is a specific class (i.e., external, such as a device that is outside the switching sub-domain, or internal, such as a device that is within the switching sub-domain), then the incoming call will be redirected to another device. This condition can be used in combination with the others to create a compound condition. For example, if busy with another call and the calling device is outside the switching sub-domain, then redirect the call to another device.

Switching functions may support one or both of the following levels of forwarding settings:

- switching function default settings
- User specified settings

Switching function default settings are a single set of forwarding-type/forward-destination combinations that can be activated and deactivated as a set. The set includes all of the CSTA forwarding-types defined and the forward-destinations for each type. Activation, deactivation, or changes to the forward-destinations are not normally possible by users.

User specified settings are individual forwarding-type/forward-destination combinations that can be activated or deactivated one at a time. User specified settings supersede switching function default settings during activation, deactivation, and when forwarding occurs.

A switching function that supports switching function default settings may also support user specified settings. Switching function default settings are used for forwarding to a standard destination such as voice mail or an attendant. User specified settings may be used to override the default settings to forward calls temporarily to another office, for example.

A user specified forwarding type supersedes the same switching function default forwarding type when forwarding occurs. For example, a user specified type of “No Answer” and its corresponding forward destination supersede a switching function default type of “No Answer”. Note that this rule may not apply to types that are not alike. For example, a user specified type of “No Answer” (a delayed type of forwarding) does not supersede a switching function default type of “Immediate”, although a user specified type of “Immediate” does supersede a switching function default type of “No Answer” (since “No Answer” is a delayed type of forwarding).

The forwarding feature has service requests and events to control and observe the activation and deactivation of the forwarding triggers at the device (i.e., Get Forward, Set Forward, Forwarding). These service requests and events are documented in Clause 22, “Logical Device Features”, beginning on page 460, and do not actually forward the incoming call when it arrives at the device, but instead sets up the trigger to cause the switching function to perform the redirecting of the call. The computing function should use the capabilities exchange services to determine which of these services and events the switching function supports.

The computing function should use the capabilities exchange services to determine which of the following levels of forwarding settings are supported by the switching function:

- Switching function default settings (set of forwarding types and forward destinations).
- User specified settings.
    - Default forwarding type.
    - Default forward destination.

Switching function default settings may be activated or deactivated manually at the device, or by providing neither the forwarding type nor forward destination (forward DN) in Set Forward service requests.

User specified settings may be activated or deactivated manually at the device or by providing the forwarding type and/or the forward destination (forward DN) in the Set Forward service request. If the forwarding type is not specified and the forward destination is specified, the switching function uses a default forwarding type. Likewise, if the forwarding type is specified and the forward destination is not specified, the switching function uses a default forward destination.

© ISO/IEC 2007 – All rights reserved

--`,,```,,,,````-`-`,,`,,`,`,,`---

Copyright International Organization for Standardization
Provided by IHS under license with ISO
No reproduction or networking permitted without license from IHS

Not for Resale

The computing function is informed that default settings are being activated in the Get Forward positive acknowledgement and the Forwarding event.

When the call is immediately redirected as a result of the forwarding feature, there are two basic event sequence models to indicate that the call has been forwarded. The following are the event sequence model definitions (Note that the computing function should use the capabilities exchange services to determine which of model or models that the switching function supports.):

1. *Forwarding Is Triggered before the Call Is Delivered to the Device* - There is basically no event sequence associated with this condition. The only characteristic associated with this event sequence is:

    - The first event associated with the delivery of the call to the new device will have an appropriate forwarding event cause. If the RedirectionDeviceID parameter is available in this event, it will be provided based upon the definition of the Call Control event and 12.3.24, “RedirectionDeviceID”, on page 146. Refer to 6.7.6, “Tracking a Diverted Call”, on page 75 for additional information on event sequences for forwarded calls.

        If the call is forwarded multiple times under the same condition (e.g., forwarded from device 1 to device 2 which is forwarded to device 3), then the information indicating that the call was forwarded will only be the information from the last device the call was forwarded from (e.g., device 2). As a result, the computing function will only see that the call has been forwarded one time.

2. *Forwarding Is Triggered after the Call Is Delivered to the Device* - The event sequence is a Diverted event followed by the first event associated with the delivery of the call to the new device. The characteristics associated with this event sequence are:

    - Depending on the capabilities of the switching function, an Offered and/or Delivered event may or may not flow as a result of presenting the to-be-forwarded call to the device from which it will be diverted.
    - The Diverted event will have an appropriate forwarding event cause. (Note that he reporting of this event is dependent on the capabilities of the switching function.)
    - The first event associated with the delivery of the call to the new device will have an appropriate forwarding event cause. If the RedirectionDeviceID parameter is available in this event, it will be provided based upon the definition of the Call Control event and 12.3.24, “RedirectionDeviceID”, on page 146. Refer to 6.7.6, “Tracking a Diverted Call”, on page 75 for additional information on event sequences for forwarded calls.

        If the call is forwarded multiple times under the same condition (e.g., forwarded from device 1 to device 2 which is forwarded to device 3), then the information indicating that the call was forwarded will be available each time the call is forwarded (e.g., device 1, device 2). This is possible because the call is actually delivered to the device before it is forward to another.

If the call is forwarded multiple times with a mixture of forwarding conditions (i.e., event sequence types), then the information indicating that the call was forwarded will be a mixture of the event sequences depending on the order of the forwarding conditions.

6.7.2 Connection Failure

The information indicating connection failure can be reported through several different event sequences. The computing function should use the capabilities exchange services to determine which of these services and events the switching function supports. The following are the possible event sequences associated with connection failure:

1. *Negative Acknowledgement* - When the switching function supports service requests that perform connection creation process and the switching function detects a failure, the negative acknowledgement

© ISO/IEC 2007 – All rights reserved

Copyright International Organization for Standardization
Provided by IHS under license with ISO
No reproduction or networking permitted without license from IHS
Not for Resale

can be used to indicate the failure to complete the connection. The following are the service requests associated with connection creation process:

- Consultation Call
- Deflect Call
- Dial Digits
- Join Call
- Make Call
- Make Predictive Call
- Pickup Call
- Single Step Conference Call
- Single Step Transfer Call

If the switching function uses the negative acknowledgement to indicate the connection failure, then the appropriate error code will be used to indicate the particular failure.

2. *Support of the Failed Event with an Associated Failed Connection* - When the switching function detects a connection failure, it places that connection into the failed state. This indicates that the call control services which can be performed with respect to the connection are limited. The following is the list of call control services that are applicable:

- Clear Call
- Clear Connection
- Call Back Call-Related
- Call Back Message Call-Related
- Camp On Call
- Deflect Call
- Intrude Call

When a connection enters the Failed state, the event sequence provided is a Failed event. The characteristics associated with this event sequence are:

- The Failed event will have an appropriate failure event cause.
- The failedConnection parameter in the Failed event will contain a “complete” Connection Identifier (i.e., a Connection Identifier that has both a Device Identifier and Call Identifier)
- The Failed event will be reported to all active device-type monitors associated with the call, as well as all call monitors associated with the call.

3. *Support of the Failed Event without an Associated Failed Connection* - This case is similar to the “Support of the Failed Event with an Associated Failed Connection” state (case 2). The difference is that when the switching function detects a connection failure, it does not create a connection for the failed device but instead indicates to the computing function that call control services, with respect to the connection, are limited. The following is the list of call control services that are applicable to the connection in the call under these conditions:

- Clear Call
- Clear Connection
- Call Back Call-Related
- Call Back Message Call-Related

© ISO/IEC 2007 – All rights reserved

Copyright International Organization for Standardization
Provided by IHS under license with ISO
No reproduction or networking permitted without license from IHS
Not for Resale

- Camp On Call
- Deflect Call
- Intrude Call

When the failure is detected, the event sequence provided is a Failed event. The characteristics associated with this event sequence are:

- The Failed event will have an appropriate failure event cause.
- The failedConnection parameter in the Failed event will contain a “Call ID only” Connection Identifier. This indicates that there is not a valid connection for the failed device in the call but that the appropriate call control service can be performed (i.e., Call Back Call-Related, Intrude Call, etc.). In the figures for the services and events, this “Call ID only” connection identifier is indicated via a dotted line (see Clause 11 for the template descriptions).
- The Failed event will only be reported to the active device and call monitors associated with the devices that where in the call prior to the failure (i.e., if a device-type monitor was on the failed device, then the event sequence is not reported).

If the Camp On Call or Intrude Call service request is performed, then the connection associated with the failed device will be created (i.e., a valid connection).

4. *Support of the Failed Event with an Associated Failed Connection, not reported via monitors on the failing device* - This case is similar to the “Support of the Failed Event with an Associated Failed Connection” state (case 2). The difference is for which monitors the Failed event is being sent: The Failed event will only be reported to the active device and call monitors associated with the devices that were in the call prior to the failure (i.e. if a device-type monitor was on the failed device, then the event sequence is not reported). Apart from this, all aspects from case 2 apply also to this case.

6.7.3 Recall

The Recall feature is a trigger that is associated with a call after a specific call control feature has been executed. When this feature is executed, it redirects or presents the call either back to the device on who’s behalf the call control feature was executed or to a switching function administrated destination associated with the specific call control feature. There are several types of call control services which can have this feature associated with them. For example:

- Hold Call
- Transfer Call
- Single Step Transfer Call
- Deflect Call
- Park Call

The event sequence associated with this feature is the Diverted event (only if the device to whom the call is being redirected is not already in the call) and the first event associated with the delivery of the call to the new device or the device that performed the call control feature. The characteristics for this event sequence are:

- The Diverted event will have an appropriate recall event cause. This event is only reported when the device to whom the call is being redirected is not already in the call (i.e., a recall to a connection that is already in the call). (Note that the reporting of this event is dependent on the capabilities of the switching function.)
- The first event associated with the delivery of the call to the new device (i.e. Delivered), or the device that performed the call control feature will have an appropriate recall event cause (in either the Delivered, Held, Queued, etc.). If the lastRedirectionDevice parameter is available in this event, and the call was actually redirected to another device outside the current call, then it will be provided based upon the definition for

© ISO/IEC 2007 – All rights reserved

Copyright International Organization for Standardization
Provided by IHS under license with ISO
No reproduction or networking permitted without license from IHS
Not for Resale

this parameter. (Refer to the definition of the Call Control events and lastRedirectionDevice parameter for more details.) If the callingDevice parameter is available in this event, it may contain the same callingDevice information prior to the recall. This means that if the calling device is the Subject Device of the event, then the information in the callingDevice and corresponding SubjectDeviceID (e.g., Delivered event SubjectDeviceID = alertingDevice) parameters may be the same. If the switching function does not retain this information with the call, then the callingDevice parameter will contain a value of “Not Known”.

6.7.4 Call Back

The Call Back feature is a trigger which is set up within the switching function. The trigger is used to initiate a call between a particular pair of devices. The pair of devices is comprised of a calling device (i.e., the device on who’s behalf the trigger is setup) and the called device (i.e., the device whom the calling device wants to initiate a call to when certain conditions associated with the called device are met). The type of conditions associated with the trigger is switching function specific. A common type of condition is the called device is no longer actively involved in a call(s). The trigger is activated for the calling device by either the Call Back Call-Related or Call Back Non-Call-Related services. The trigger is deactivated by one of the following: successful execution of the trigger, the Cancel Call Back service, or a switching function specific timeout period. Once the trigger is activated, the switching function waits for the particular condition associated with the Call Back feature to be met. Once met, the switching function initiates a call on behalf of the calling device to the called device. This is done by first prompting the calling device (if supported by the device) and then initiating the call to the called device.

The event sequence associated with execution of the Call Back trigger is the Service Initiated event (only if the calling device is prompted), Originated event and the events associated with the called device’s involvement in the call. The characteristic for this event sequence is that both the Service Initiated (if supported) and Originated events will have an event cause of Call Back.

6.7.5 External Calls

A call is considered to be external when there is at least one device in the call that is outside the switching sub-domain. For more details on how the switching function represents these devices within the switching sub-domain, refer to 6.1.1.4.2, “Network Interface Device Category”, on page 25. The activities associated with external calls are broken down into two categories:

- *Incoming Calls* - A call is being initiated from a device outside the switching sub-domain.
- *Outgoing Calls* - A device inside the switching sub-domain is adding or initiating a call to a device outside the switching sub-domain.

These categories are represented by different event sequences. The characteristics associated with these event sequences are:

- Incoming Calls
    - A Service Initiated event is generated for the network interface device when the network interface device is allocated (e.g., seized) for the external incoming call. The initiatingDevice parameter will contain the information on which network interface device is being used for the call. Note that this event is only generated if the network interface device is monitored.
    - The Digits Dialled event is generated for the network interface device when a portion of the dialling sequence has been received over the network interface device. Note that this event is only generated if the network interface device is monitored.
    - The Originated event is generated for the network interface device when the external incoming call has originated from the network interface device. The NIDDevice parameter will contain the information on which network interface device is being used for the call. Note that this event is only generated if the network interface device is monitored.

--`,,```,,,,````-`-`,,`,,`,`,,`---
© ISO/IEC 2007 – All rights reserved
Copyright International Organization for Standardization
Provided by IHS under license with ISO
No reproduction or networking permitted without license from IHS
Not for Resale

- In all subsequent events (independent of whether or not the network interface device is observable), this incoming call is distinguished from an internal incoming call by the presences of the associatedCallingDevice (i.e., containing either a Device Identifier or a value of “Not Known”). The information in the associatedCallingDevice parameter is first associated with the call when it enters the switching sub-domain (i.e., Service Initiated or Originated events) and will be present until the calling device leaves the call.

- Outgoing Calls
  - When initiating a connection to a device outside the switching sub-domain and the switching function is associating the Network Interface Device with the outside device, a Network Reached event is reported. In addition, the Network Reached event is the first event that indicates the call is an external outgoing call. Subsequent events (if available) will contain the associatedCalledDevice parameter (i.e., the value from the networkInterfaceUsed parameter of the Network Reached event) and will be present until the call is cleared. In addition, until the Network Reached event is generated, the call is consider to be an internal call.
  - The event sequence after the Network Reached event that is associated with the device outside the switching sub-domain may be limited but the events that are reported will contain one of the event causes documented in the event definition. If the Network Reached event contained the networkCapability parameter, future Network Capabilities Changed events may be provided indicating a change in the signalling capability of the network and ultimately the types of events that can be provided.

6.7.6 Tracking a Diverted Call

When observing a call or a device in a call, and the call diverts from a device in the call, the computing function shall use the Diverted event to track the progress of the call as a result of the redirection.

If the switching function does not provide the Diverted event for all devices in a call or for call-type monitors (as indicated through the capabilities exchange services), the computing function shall use parameters in the first event after the call has been diverted to properly track the progress of the call as a result of the redirection. The device identifiers are used to observe the movement of the call and the event cause is provided to indicate what caused the movement of the call. (Note that the call may have been diverted several times between the previous event (if one was generated) and the first event after the diversion. As a result, the computing function can only ascertain that either one or two redirections have occurred.)

6.7.7 Media Stream Access

The capability to control the information content within a call is called media stream access, or simply, media access. Media access is provided to a computing function through a media service. Common media service capabilities are play/record of voice and audio, automatic speech recognition, text to speech, fax, and data services.

Some of these capabilities can alternatively be provided as voice features defined in 6.1.1.4.7 through 6.1.1.4.13.

6.7.7.1 Media Attachment Services

A computing function making use of both call control services and media services needs to establish sessions with both services, attach calls to the media service, and needs a way of associating the identifiers (e.g., Connection Identifiers, Media Stream Identifiers) used by the two services. This Standard defines a set of services, called media attachment services, that make these tasks significantly easier for the computing function.

--`,,```,,,,````-`-`,,`,,`,`,,`---

© ISO/IEC 2007 – All rights reserved

Copyright International Organization for Standardization
Provided by IHS under license with ISO
No reproduction or networking permitted without license from IHS Not for Resale

6.7.7.2 Media Service Type

A particular media service, which is defined by its set of services and possibly its access methods (APIs, protocols, etc.) is identified for the purpose of the media attachment services by a unique media service type identifier. The mediaServiceType parameter is used to indicate which media service is to be (or has been) attached to or detached from a particular call or connection that the computing function is controlling and/or monitoring. In some instances, the media service version may also be provided, such that different versions of the media service can be identified by unique media service types.

Table D-1 identifies and describes the set of media service types defined by this Standard:

Table 6-10 Media Service Types

Media Service Type	Media Stream ID Representation
CSTA Voice Unit	Refers to the connection identifier in the sub-domain.
Data Modem	Refers to the address that is to be used to access the modem control and data stream.
Digital Data— Isochronous/IEEE 1394	Refers to the IEEE 1394 channel that is being used.
Digital Data—Isochronous/ GeoPort	Refers to the GeoPort stream that is being used.
Digital Data— Isochronous/ATM	Refers to the ATM virtual channel/path identifier that is being used.
Digital Data— Isochronous/ISDN	Refers to the ISDN bearer channel that is being used.
Digital Data—API	Refers to the particular API's digital data stream reference ID (e.g., Microsoft's Winsock is socket identifier) to indicate which digital data stream is to be used.
ECTF S.100 Media Services Default	Refers to the ECTF S.100 Media Services CCR Resource ID (CCR ECTF ResourceID) to indicate which media stream channel to be used.
ECTF S.100 Media Services Application Service	Refers to the ECTF S.100 Media Services Application Service.
IVRScript1 through IVRScript10	Not defined; the attachment of the media stream channel to the vendor media server instance is vendor-specific.
Live Sound Capture—Analog	Refers to the analog jack that is being used.
Live Sound Transmit—Analog	Refers to the analog jack that is being used.
Live Sound Capture—IEEE 1394	Refers to the IEEE 1394 channel that is being used.
Live Sound Transmit—IEEE 1394	Refers to the IEEE 1394 channel that is being used.
Live Sound Capture and Transmit—GeoPort:	Refers to the GeoPort stream that is being used.
Live Sound Capture and Transmit—ATM	Refers to the ATM virtual channel that is being used.
Live Sound Capture and Transmit—ISDN	Refers to the ISDN bearer channel that is being used.
Sound Capture and Transmit—API	Refers to the particular API's sound stream reference ID (e.g., Microsoft's MCI's is MCI Device handle) to indicate which sound stream is to be used.
Sound Capture and Transmit—Rockwell ADPCM Packet	Refers to the address that is to be used to access the asynchronous stream.
Universal Serial Bus (USB)	Refers to the USB endpoint.
sfSpecific1 through sfSpecific10	Not defined; the attachment of the media stream channel to the vendor media server instance is vendor-specific.

6.7.7.3 Media Service Instance

A specific set of resources and/or functions that provide a particular media service (as identified by the media service type) are referred to as a media service instance. For example, a media service instance may be a specific media server, subsystem, or software that provides the given service. When the computing function

© ISO/IEC 2007 – All rights reserved

Copyright International Organization for Standardization
Provided by IHS under license with ISO
No reproduction or networking permitted without license from IHS
Not for Resale

attaches a call to a media service, it may request a particular instance of the service through the media service instance identifier. A media service instance may have associated with it zero or more media access devices that provide a means of physical connection between switching sub-domain resources and media service resources.

6.7.7.4 Media Access Device

A media access device is a device within the switching sub-domain used in establishing and modeling the physical connection of the media stream between switching sub-domain resources (i.e., devices in a call) and media service resources (i.e., media processing resources such as tone generators/detectors, speech recognition devices, text-to-speech converters, modems, etc.). During media service instance attachment, a media access device may be conferenced into a call, or the call may be transferred to the media access device from another device. During media detachment, the media access device is cleared from the call.

6.7.7.5 Media Stream ID

The media services that can be the target of the media attachment services are unlimited. That is, very little is assumed about the operational model of the media services themselves. The only requirement is that the media service defines some identifier, referred to here as the media stream identifier (i.e., mediaStreamID), that can be used by the computing function to reference the media stream associated with a connection.

The mediaStreamID is returned, if supported, as a parameter in the Media Attached event. The capability exchange services are used to determine if the switching function supports returning the mediaStreamID.

The format and meaning of the mediaStreamID is media service and implementation dependent, and is not defined here. The switching function only guarantees the mediaStreamID to be valid while the media service instance remains bound to the call. Once the media service instance is detached from the call, the validity of the mediaStreamID is media service dependent.

6.7.7.6 Service Operation

The media attachment services defined in this Standard consist of two services: Attach Media Service and Detach Media Service, and two events: Media Service Attached and Media Service Detached. A description of these services and events and their usage follows. For more information see Clause 19, “Media Attachment Services & Events”, beginning on page 389.

A typical media enabled computing function will establish or accept a call, perform some media access functions associated with the call, and then clear the call. The first and third steps clearly require the call control services only, while the second involves coordination of both call control and media services. This second step can be further sub-divided into the following tasks:

1. A particular instance of the media service (e.g., specific media server or media subsystem providing the desired services) shall be chosen, either by the computing function or by the switching function on behalf of the computing function.
2. The computing function shall establish a session with the selected media service instance. The method of the session establishment is media service dependent (e.g., initialize with the media service API, send a message to the media service, establish a CSTA association with a SRF).
3. If the switching function supports returning a mediaStreamID to the computing function, an association between the switching function and the media service instance must be established. The way this association is realized is implementation dependent. The switching function and the media service instance require a means to attach the media stream channel of a connection to a media stream channel of the media service instance. This is referred to as a connection mode. Connection modes are enumerated in the specification of Media Attachment services. They fall into two categories:

© ISO/IEC 2007 – All rights reserved

Copyright International Organization for Standardization
Provided by IHS under license with ISO
No reproduction or networking permitted without license from IHS
Not for Resale

a. Explicit representation by adding a media access device into the call via a call control service (e.g. Conference Call, Transfer Call, Deflect Call, Directed Pickup Call). The media service instance is bound to the new connection. In general, the media access device behaves the same as any other call control device, although the services that can be applied to the device or a connection associated with the device may be restricted by some implementations. Connection modes in this category best suit, but are not limited to, configurations where call control resources and media resources consist of distinct, non-integrated hardware components. An example of such a configuration is one in which the switching resources reside in a PBX and the media service resources reside in a VRU.

b. Implicit representation by an existing connection in the call (referred to as the direct connectionMode). A media access device is not added to the call. Instead, the media access device is already attached to an existing connection in the call. Connection modes in this category best suit, but are not limited to, configurations where call control resources and media resources consist of common or tightly integrated hardware components. An example of such a configuration is one in which the switching and media service resources are provided by an integrated telephony and media processing board in a PC. Another example of such a configuration is one in which an external voice response unit makes an outbound call to a media access device in a switching sub-domain, thus attaching its media services to the device's connection.

4. The associated mediaStreamID assigned by the media service instance may be returned by the switching function to the computing function.

5. The computing function can access the media service instance using the supplied mediaStreamID. At this point, the computing function may mix the use of call control services and services provided by the media service instance as needed.

6. When the computing function has finished its use of the media services, it shall unbind the media service instance from the call. The unbinding of the media service instance consists of releasing the attachment established in step 3, and, if applicable, removing the associated media access device from the call. As far as the switching function is concerned, the returned mediaStreamID is also invalidated once the media service instance is detached from the call.

7. The computing function may or may not close its session with the media service instance. The switching function may or may not release its association with the media service instance.

Several of these tasks are handled on behalf of the computing function through the use of the Media Attachment Services. Steps 1, 3, and 4 are provided by the Attach Media Service, and step 6 is provided by the Detach Media service.

The Attach Media Service attaches an existing call to a media service instance. The Attach Media Service service request provides a mediaServiceInstanceID parameter that selects a particular media service instance associated with the switching function when multiple choices exist. If the switching function has multiple choices and the parameter is not supplied, then the switching function shall select which media service instance is to be used.

The Attach Media Service, depending upon the connectionMode parameter supplied in the service request, initiates a connection to an available media access device associated with the service instance (for the explicit connection category). At the completion of a successful service invocation a Media Attached event is reported on monitors associated with the specified call or device in addition to any other events that flow as a result of making the media access device connection. The Media Attached event may contain the associated mediaStreamID for accessing the media service instance. The Attach Media Service service positive acknowledgement and Media Attached event may be correlated using the CSTA Connection and Device Identifiers associated with the chosen media access device or existing connection that was bound in the call.

A Media Attached event may flow any time a connection is bound to a media service instance, even if the binding was not the result of an Attach Media Service service request. This provides for automatic attachment and media service type determination by the switching function (e.g., situation where calls are automatically directed to a media access device by the switching function or automatically bound to an existing connection when a call arrives). When the computing function receives this event, it may open a session with the

© ISO/IEC 2007 – All rights reserved

Copyright International Organization for Standardization
Provided by IHS under license with ISO
No reproduction or networking permitted without license from IHS
Not for Resale

associated media service instance and immediately begin accessing the media service instance using the mediaStreamID provided in the event. The session establishment with the media service and mediaStreamID usage are media service dependent and outside the scope of this Standard.

The Detach Media Service service request undoes the actions of Attach Media Service service. It unbinds the media service instance from the specified call or connection and breaks the physical connection of the media stream between the switching sub-domain and media service instance. Any associated media access device involvement in the call is also cleared. The connection to the device is cleared and reported through normal call control events (i.e., Connection Cleared events). A Media Detached event report is used to indicate that media service instances have been detached from a call or connection. The switching function itself may initiate a media detachment. In this case, the detachment is reported using the same events as if the computing function had initiated the Detach Media Service service request (e.g., Media Detached and possibly Connection Cleared events).

6.7.7.7 Related Services

A number of other call control services return information related to the media access capability. The Snapshot Call service returns a list of media service types, media service versions, media service instance IDs, and media stream IDs associated with each connection in a call.

The Get Switching Function Capabilities service returns, for the entire switching function, a list of supported media service types, media service versions, media service instance IDs, and whether or not the media stream ID is supported for this combination of media attributes, as well as the supported connection modes for each combination.

Finally, the Get Logical Device Information service returns, for a selected device, a list of supported media service types, media service versions, media service instance IDs, and whether or not the media stream ID is supported for this combination of media attributes, as well as the supported connection modes for each combination.

6.7.8 Routeing Services

A switching function uses Routeing services when it needs the computing function to supply call destinations. This may be on a call-by-call basis or it may be non-call related. The computing function can use internal databases together with call information to determine a destination, or route, for each call. For example, the computing function might use the caller's number and information in a database to route incoming calls.

A switching function may support Routeing services for any type of call (e.g., external outgoing, external incoming, intra-switching sub-domain). Routeing services may require that the switching function be configured to direct calls to a device known as a *routeing device*. This device shall be addressable (i.e., visible within the switching sub-domain) with respect to Routeing services but may or may not be addressable with respect to other services (e.g., Call Control, Monitoring).

The routeing device may be a virtual device used only for routeing and thus may not be monitorable. The way a particular virtual routeing type device is used by a switching sub-domain is specific to each implementation. Examples include:

- a routeing device could be used to route all outgoing external calls from all devices within a given switching sub-domain
- a routeing device could be used to route all incoming external calls independent of the network interface device being used
- a routeing device could be used to route all calls that are considered to be priority calls independent of their origin.

A switching function implementation will implement as many routeing devices as it requires in order to reflect the different routeing processes it supports.

© ISO/IEC 2007 – All rights reserved

Copyright International Organization for Standardization
Provided by IHS under license with ISO
No reproduction or networking permitted without license from IHS
Not for Resale

Figure 6-31 Overview of a Routeing Dialogue

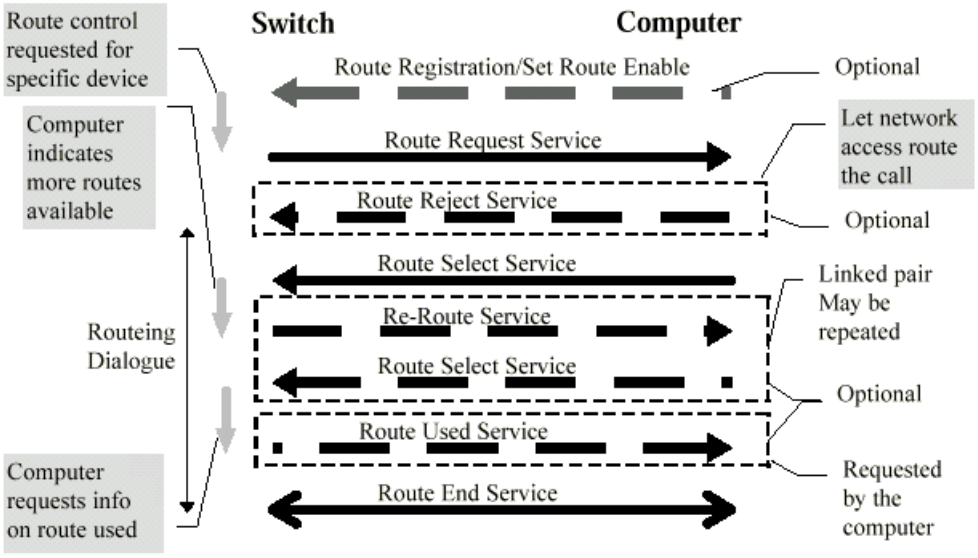

Routeing services are used within a sequential “routeing dialogue” such as that represented in Figure 6-31. (Note that none of the routeing services return positive acknowledgements. Negative acknowledgements, though provided by routeing services when applicable, are not shown in the figure.)

A routeing dialogue is typically initiated by the switching function when a call is directed to a device and particular conditions are met for that call at that device. The conditions at a device under which the switching function may initiate a routeing dialogue are determined by its Route Mode and the Route Registration Service. Through these mechanisms the computing function may specify to the switching function that when calls encounter a particular device, the computing function should be consulted for a proposed route.

Routeing services are linked within a routeing dialogue by the routeing cross reference identifier (routeingCrossRefID). A routeing cross reference identifier is provided by the Switching function as part of the Route Request Service used to initiate a routeing dialogue. This routeing cross reference identifier is quoted by each subsequent invocation of a routeing service in the routeing dialogue.

Route Requests generated by the switching function may be call-related or non-call related.

6.7.8.1 Route Registration and Route Mode

Table 6-11 below specifies the conditions that must be satisfied before a given switching function initiates a routeing dialogue for a given routeing device by generating a Route Request. The switching function’s behaviour is governed by its support for the routeing registration services and support for the Route Mode attribute. Registration has no affect on routeMode, and enabling/disabling routeMode has no affect on registration. In order to use routeing services for a given routeing device, a computing function must satisfy the conditions specified in Table 6-11 by invoking the appropriate services.

Table 6-11 Routeing Behaviour

	Registration Not Supported	Registration Supported
Route Mode Supported	• Registration not required • RouteMode must be enabled • Switching Function must initiate routeing dialogue if a call of any media class arrives	• Registration required • RouteMode must be enabled • Switching Function must initiate routeing dialogue if a call of any media class arrives that matches the media class requested

© ISO/IEC 2007 – All rights reserved

Copyright International Organization for Standardization
Provided by IHS under license with ISO
No reproduction or networking permitted without license from IHS
Not for Resale

Table 6-11 Routeing Behaviour (continued)

	Registration Not Supported	Registration Supported
Route Mode Not Supported	• RouteMode implicitly enabled • Registration not required • Switching Function may initiate routeing dialogue at its discretion	• RouteMode implicitly enabled • Registration required (specific or all) • Switching Function must initiate routeing dialogue if a call arrives that matches the media class requested

The positive acknowledgement to the Route Register service contains the route register request identifier (routeRegisterReqID) that the computing function uses to identify service requests that arrive for this registration.

If the switching function supports the Route Registration services, then the computing function shall use these services to register as a routeing server before it can route calls. If the switching function does not support the Route Registration services, then the computing function may receive route service requests for any routeing device at any time.

The computing function may either register as the routeing server for a specific routeing device or, if supported by the switching function, as a routeing server for all routeing devices within the switching sub-domain.

A route registration can be cancelled using the Route Register Cancel service. Once this service is positively acknowledged, the switching function will no longer send route service requests to the computing function. Additionally, the switching function can cancel a route registration at any time by sending the computing function a Route Register Abort service request.

Routeing services for a particular device may be suspended without cancelling route registration by disabling its Route Mode. This does not effect route registration and route requests for the given device will resume when its Route Mode is enabled.

The capabilities exchange services can be used to determine if the switching function supports the Route Registration services and if so, if the capability to register for all routeing devices is supported. The capabilities exchange services can also be used to determine if the switching function supports the Route Mode attribute.

6.7.8.2 Call Routeing

An example of a routeing process may involve the following sequence of steps:

1. The switching function receives a call at the routeing device. The routeing device may be any device within the switching sub-domain.
2. When the call arrives at the routeing device, the switching function creates a routeing dialogue for the call. The switching function allocates a routeing cross reference identifier (routeingCrossRefID) that references this routeing dialogue.
3. The switching function sends the Route Request service to the computing function (that registered as the routeing server) for the routeing device or as the routeing server for all routeing devices within the switching sub-domain. This service request contains the routeing cross reference identifier, the route registration request identifier (if supported), and call information such as the Connection Identifier for the call, and calling and called numbers.
4. The computing function decides whether to reject the Routeing service request for this call, provide a route for the call, or end the routeing dialogue. If the computing function decides to reject the call, it sends the switching function a Route Reject service request. If the computing function decides to provide a route for the call, it sends the switching function a Route Select service request containing the destination for the call. The computing function may include an optional flag in the Route Select service request (i.e., routeUsed) instructing the switching function to inform it of the call's final destination. The final destination may be different than the computing function-provided destination when switching

© ISO/IEC 2007 – All rights reserved

Copyright International Organization for Standardization
Provided by IHS under license with ISO
No reproduction or networking permitted without license from IHS
Not for Resale

function features such as call forwarding redirect the call. If the computing function decides to end the routeing dialogue, it sends the switching function a Route End service request. In this case, the computing function does not provide a destination for the call and the switching function uses an alternate mechanism (not defined) to route the call.

5. If the switching function receives a Route Reject service request, then it returns the call to the network for alternate routeing, and sends the computing function a Route End service request to indicate that the routeing dialogue is ended. If the switching function receives a Route Select service request, it attempts to route the call to the computing function-provided destination. If the destination is valid, the switching function routes the call to that destination and sends the computing function a Route End service request to terminate the routeing dialogue. If the computing function-provided destination is not valid (e.g., invalid directory number, destination busy), then the switching function may send a Re-Route service request to the computing function to request a route to an alternate destination. If the switching function receives a Route End service request, it terminates the routeing dialogue.

6. If the computing function receives a Re-Route service request it can select a different destination for the call and send the switching function another Route Select service request. Depending on the switching function implementation, the re-routeing service request exchange can repeat until the computing function provides an acceptable route. The computing function will find out about a successful route when the switching function sends a Route End service request or if the computing function included the routeUsed flag in its last Route Select service request.

Either the switching function or the computing function may send a Route End service request at any time to end the routeing process and terminate the routeing dialogue. This releases the routeing cross reference identifier for use in the future. This service request indicates, for example, that the computing function does not want to route the call, or the switching function (usually in the absence of a Route Select service request) routed the call using some default mechanism within the switching function.

Note that a conflict may arise in this dialogue if the computing function invokes the Route End Service, for example to indicate that no more alternative routes are available, but still wants to receive a route used report via the Route Used Service invoked by the switching function. Avoidance or resolution of this conflict is the responsibility of the computing and/or switching function implementation(s).

A call that is not successfully routed does not necessarily mean that the call is cleared or not answered. Most switching function implementations will have a default mechanism for handling a call at a routeing device when the computing function has failed to provide an acceptable destination for the call. The switching function shall send a Route End service request to the computing function when it terminates the routeing dialogue, unless the routeing dialogue was terminated by a Route End service request from the computing function first.

The minimum set of services a switching function shall provide if it supports routeing are: Route Request, Route Select, and Route End (from the switching function). Other routeing services may be provided in any combination in addition to this minimum set.

Figure 6-32 illustrates the typical Routeing procedure.

--`,,```,,,,````-`-`,,`,,`,`,,`---

© ISO/IEC 2007 – All rights reserved

Copyright International Organization for Standardization
Provided by IHS under license with ISO
No reproduction or networking permitted without license from IHS

Not for Resale

Figure 6-32 Routeing Procedure

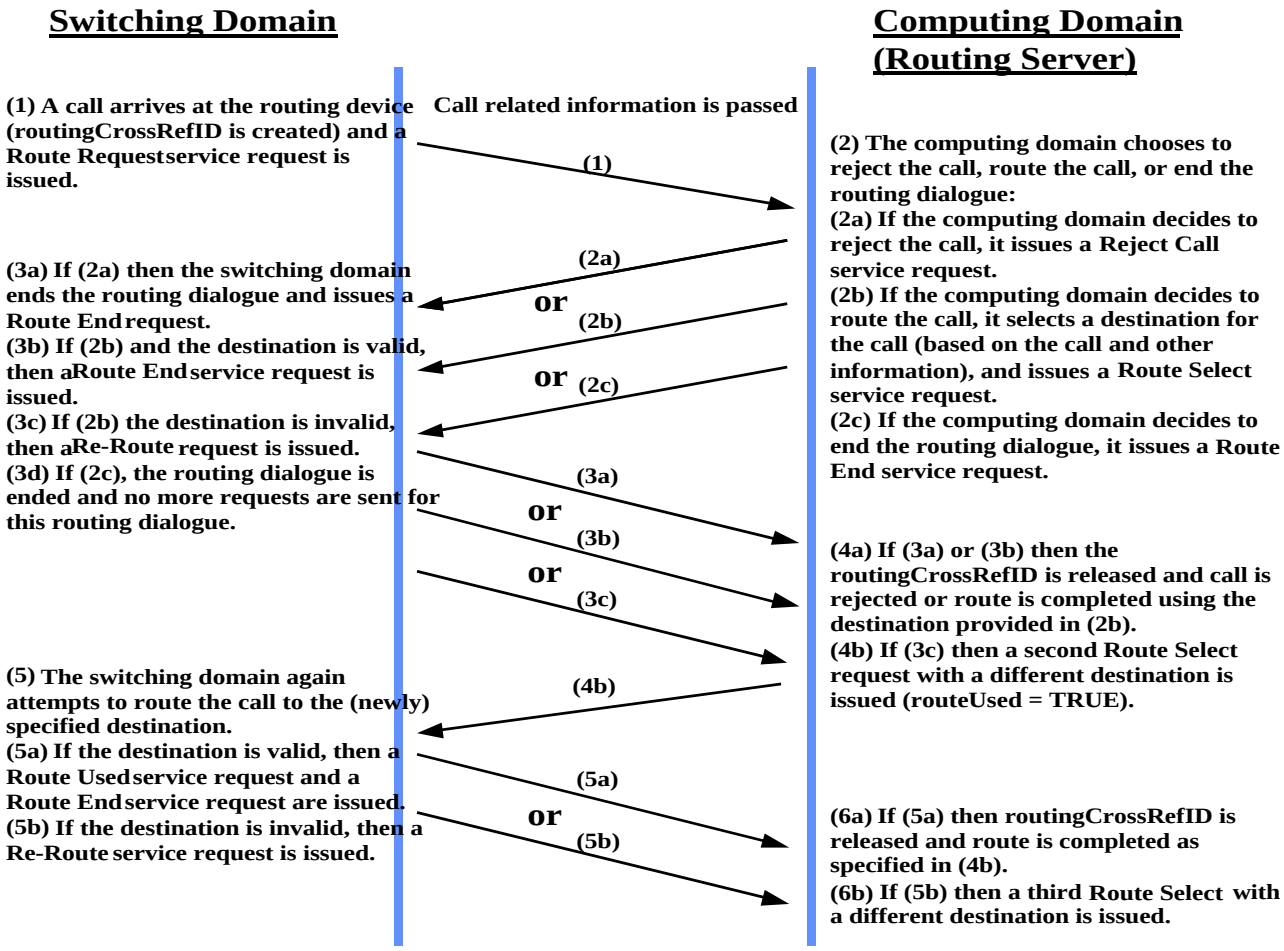

6.7.8.3 Route Register Request ID and the Routeing Cross Reference ID

The routeing services use two identifiers to refer to different software objects in the switching sub-domain. The route register request identifier (routeRegisterReqID) identifies a routeing registration for which the computing function (acting as a routeing server) will receive Routeing service requests. This identifier may be associated with a particular routeing device within the switching sub-domain or it may indicate that the computing function is the routeing server for all routeing devices within the switching sub-domain. When the computing function uses the Route Register service to register for routeing services, it receives a routeRegisterReqID in the positive acknowledgement from the switching function. The routeRegisterReqID is only valid until the routeing registration is ended by the computing function or switching function.

Within a routeing registration (routeRegisterReqID) the switching function may initiate many routeing dialogues (shown in Figure 6-32) to route multiple calls. A switching function uses a routeing cross reference identifier (routeingCrossRefID) to refer to each routeing dialogue. The computing function receives a routeingCrossRefID in each Route Request service request. The Route Request service initiates a routeing dialogue. The routeingCrossRefID is only valid for the duration of the routeing dialogue pertaining to a specific call.

The routeing cross reference identifier (routeingCrossRefID) is unique within the routeing registration (routeRegisterReqID). Some switching functions may provide the additional benefit of a unique routeing cross reference identifier across the entire switching sub-domain. This is also the case if routeing registration is not supported by the switching function. Routeing registration identifiers (routeRegisterReqIDs) are unique across a given CSTA service boundary.

© ISO/IEC 2007 – All rights reserved

Copyright International Organization for Standardization
Provided by IHS under license with ISO
No reproduction or networking permitted without license from IHS
Not for Resale

6.7.8.4 Monitoring of Routeing Device

Some switching function implementations may support monitoring of routeing devices. For those computing functions that have an active monitor on the routeing device, any activity at the device (for instance call control activity) shall generate the relevant event sequence as specified throughout this specification.

6.7.8.5 Routeing Services with respect to Media Class

A routeing device can support the routeing of calls of any combination of media class (i.e., voice or digital data or both). Refer to the media class component of 12.2.18, “MediaCallCharacteristics”, on page 130 for the complete set of possible values.

Once the routeing dialogue is visible to the computing function through the Route Request service, the media characteristics of the call will be identified and associated with the routeing cross reference identifier.

6.7.9 Device Maintenance

Device Maintenance events indicate changes in the maintenance state of a device. These events indicate if a device has been taken out of service (can no longer accept calls or be manipulated by the computing function), is partially in service, or if a device has been placed back in service.

6.7.10 Prompting

Some CSTA services (Make Call, Call Back, Pickup, Join Call, for example) may require to prompt the user of the targeted device in order to take that device off-hook. The implementation of a prompting mechanism is switching function specific (display flashing, ring pattern, lamp blinking, etc.).

For CSTA services that specify prompting (except the Make Call service), the switching function shall support (as indicated by the capability exchange services) one of the two possible prompting modes:

- prompting is a pre-condition to a service - in this mode prompting occurs before the execution of the CSTA service. The Service Initiated event that indicates prompting shall flow before any other service specific events and shall contain connection identifier that is not associated with the CSTA service. After the device goes offhook, a Connection Cleared event associated with the prompt is generated and the CSTA service that initiated the prompt is executed.
- prompting is part of a service - in this mode, prompting is part of the execution of the service. The Service Initiated event that indicates prompting is part of the completion criteria for the service and the connection identifier used in the Service Initiated event is associated with the CSTA service.

For information on event sequences with respect to prompting in the context of specific services, refer to the Monitoring Event Sequences associated with a CSTA service.

6.7.11 Telephony Tones Features

There are several features that support the generation and detection of telephony tones.

The Generate Telephony Tones service (18.1.5, “Generate Telephony Tones”, on page 375) generates a specified tone for a connection in a call. While a telephony tone is being generated, it may be canceled via the Cancel Telephony Tones service (18.1.2, “Cancel Telephony Tones”, on page 369).

The Telephony Tones Generated event (18.2.4, “Telephony Tones Generated”, on page 384) is used to monitor for telephony tones that are generated by a device (e.g., via the Generate Telephony Tones service).

The Data Collection services (Clause 25, “Data Collection Services”) are used to report telephony tones that are received over a connection at a device.

© ISO/IEC 2007 – All rights reserved

Copyright International Organization for Standardization
Provided by IHS under license with ISO
No reproduction or networking permitted without license from IHS
Not for Resale

6.7.12 DTMF and Rotary Pulse Digits Features

Several services such as Make Call and Consultation Call provide a parameter for addressing a device while a call is being created. Also, for calls that are already created, the Dial Digits service provides address information to select a destination device or to complete a multi-stage dialling sequence. Depending upon the switching function implementation and the type of network, these parameters may be translated into DTMF or rotary pulse digit information used by the network to select a destination device. This addressing information shall not be used for end-to-end purposes.

Other services, as defined below, are used for generating and detecting end-to-end information that is to be sent to a device (i.e., not to address/select a device).

The Generate Digits service (18.1.4, “Generate Digits”, on page 373) is used to generate DTMF or rotary pulse digit information for a connection in a call.

The Digits Generated event (18.2.3, “Digits Generated”, on page 383) is used to monitor for DTMF or rotary pulse digits that are generated by a device, either manually or via the Generate Digits service.

The Data Collection services (Clause 25, “Data Collection Services”) are be used to report DTMF or rotary pulse digits that are received over a connection at a device.

6.7.13 Data Collection Services

The Data Collection services are used to collect information such as DTMF/rotary pulse digits and Telephony Tones that is received by a device over a connection.

The Start Data Collection service is used by the computing function to initiate the data collection. The service specifies if data should be collected for a specific connection or for the next connection at a device.

The Stop Data Collection service is used to stop the data collection. Data collection is also stopped if the connection over which data is being collected is cleared.

Information that is collected as part of the data collection is reported to the computing function via the Data Collected service.

The data collection may be suspended and resumed via the Suspend Data Collection and the Resume Data Collection services. The Data Collection Suspended and the Data Collection Resumed services notify the computing function if the data collection has been suspended or resumed.

The Data Collection services are specified in Clause 25, “Data Collection Services”.

7 Association Establishment

This Standard is based upon the assumption that the services defined here, and a protocol that supports these services, operate within an application association (otherwise known as a CSTA association or association) as provided by IS 8649 (ACSE). This association can be either:

- an implicit association realized through the use of a switching function initiated CSTA System Status service
- an implicit association realized through the use of a computing function initiated CSTA Request System Status service
- an explicit association realized through the use of ACSE
- an explicit association realized through the use of Ecma Application Session Services

The initialization sequence of CSTA messages for creating associations is described in the following sections.

Once an association has been established, the switching function shall be prepared to receive CSTA services.

--`,,```,,,,````-`-`,,`,,`,`,,`---

Copyright International Organization for Standardization
Provided by IHS under license with ISO
No reproduction or networking permitted without license from IHS Not for Resale

7.1 Implicit Association created using CSTA System Status service (initiated by Switching Function)

In the initialization sequence for an implicit association created using System Status, as shown in Figure 7-1, the switching function begins the sequence by sending a System Status service with a system status value of either Enabled or Normal. The computing function shall respond with a positive acknowledgement. An implicit association is established once the positive acknowledgement is received by the switching function.

In Figure 7-1, the computing function uses the Get Switching Function Capabilities service to obtain the capabilities of the switching function after the association has been created.

Figure 7-1 Implicit Association created via System Status - Initialization Sequence

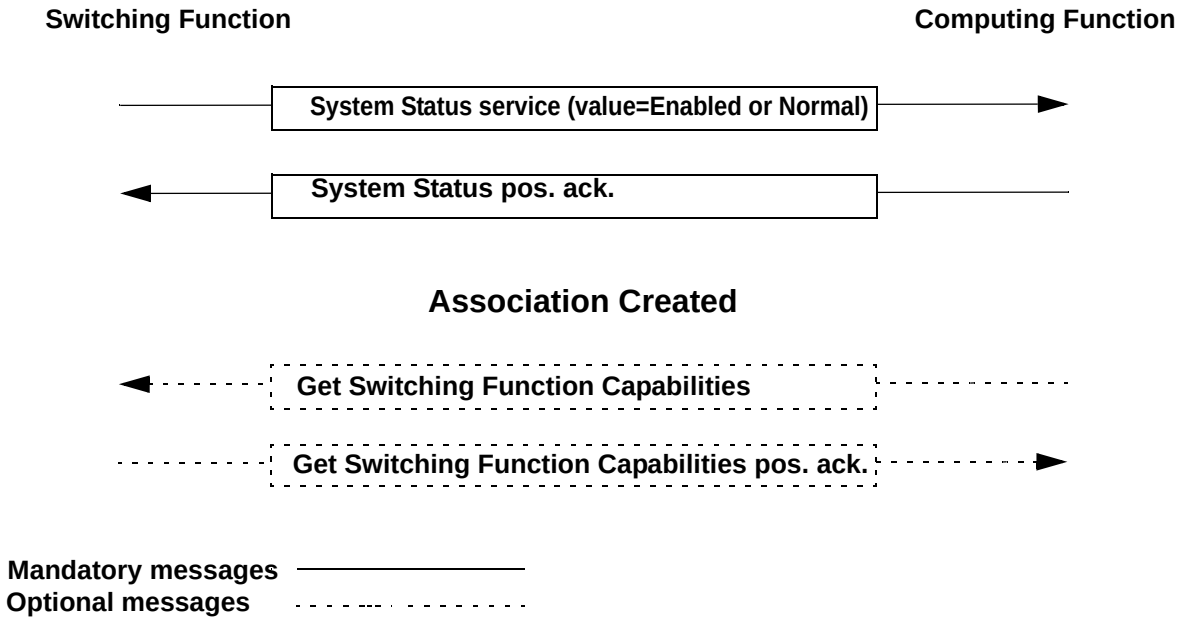

7.2 Implicit Association created using CSTA Request System Status service

In an implicit association created using CSTA Request System Status, the computing function sends a CSTA Request System Status service request to establish an application association.

The switching function shall respond with a positive acknowledgement that includes a System Status value.

The mandatory part of the initialization sequence is completed once the positive acknowledgement is received by the computing function.

The initialization sequence for an explicit association created using CSTA Request System Status is shown in Figure 7-2.

In this figure, after the application association is created, the computing function uses the Get CSTA Features service to obtain the services and events supported by the switching function.

Next the application uses the System Register service to register with the switching function to receive System Status services.

© ISO/IEC 2007 – All rights reserved

Copyright International Organization for Standardization
Provided by IHS under license with ISO
No reproduction or networking permitted without license from IHS
Not for Resale

Some time later the switching function sends a System Status request to the application to notify it of a change in system status.

Figure 7-2 Implicit Association created using CSTA Request System Status - Initialization Sequence

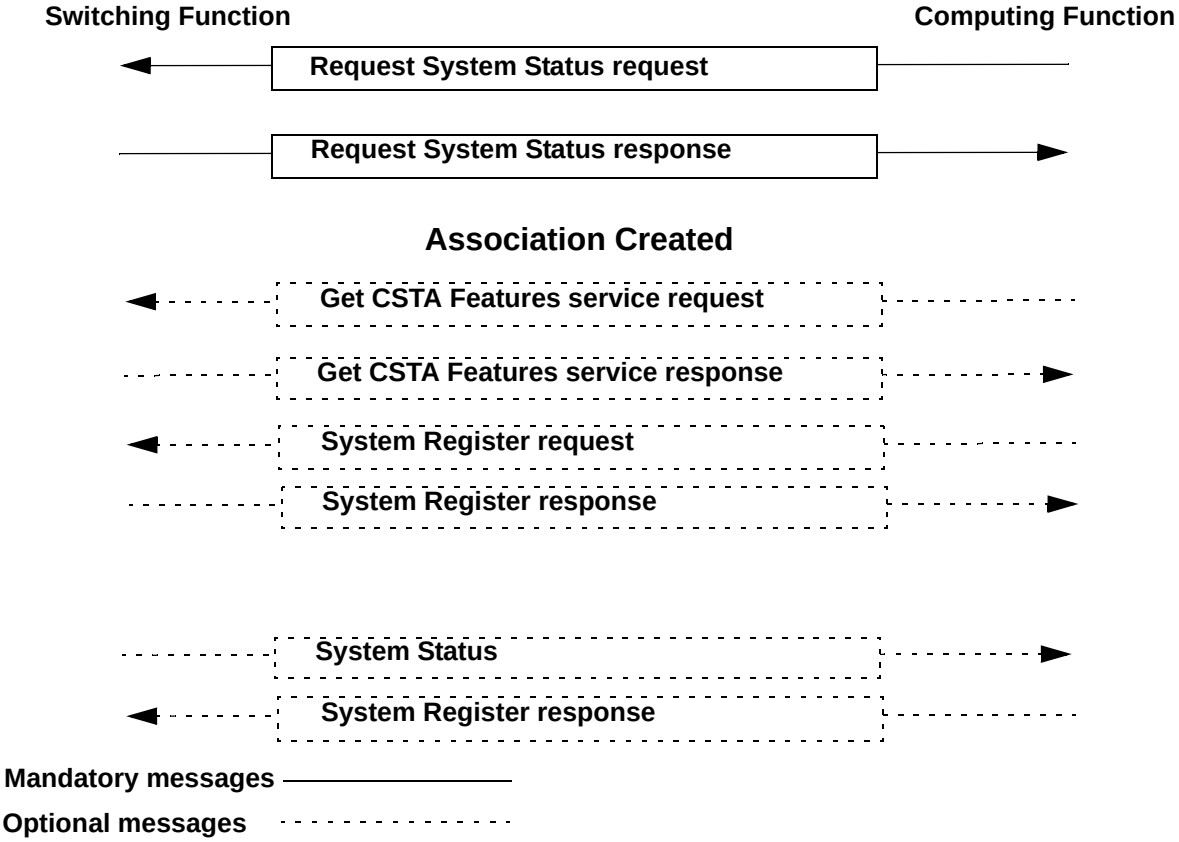

7.3 Explicit Association created using ACSE

In an explicit association created using ACSE, CSTA shall make use of a single application context name for all versions and variations of implementation of CSTA Services and Protocol. To facilitate the exchange of version and implementation information, CSTA specifies that the following information shall be exchanged in the ACSE *Association Information* field.

1. CSTA Association Information shall provide the following parameter:
   - CSTA Version - shall indicate the versions of the CSTA protocol that the implementation can support. If two interacting systems support more than one version, then the highest CSTA Version they both support shall be used for the association. A CSTA protocol version refers to the implementation of a specific version of the CSTA Standard described in the corresponding CSTA Protocol Standard.
2. CSTA Association Information also may provide the following parameters:
   - Functionality Required - shall indicate the CSTA Services and Event Reports that are required by the function providing this information.
   - Functionality Offered - shall indicate the CSTA Services and Event Reports that are offered by the function providing this information for its highest-supported CSTA Version.
   - Private Data Version - shall indicate the Private Data versions that are offered by the function providing this information.

© ISO/IEC 2007 – All rights reserved

Copyright International Organization for Standardization
Provided by IHS under license with ISO
No reproduction or networking permitted without license from IHS
Not for Resale

The initialization sequence for an explicit association is shown in Figure 7-3. The computing function begins the sequence by sending an ACSE request with the appropriate CSTA Association Information as described above. The switching function responds with an ACSE response that also includes the appropriate CSTA Association Information.

After the ACSE exchange, the switching function sends a System Status service with a system status value of either Enabled or Normal. The computing function shall respond with a positive acknowledgement. The mandatory part of the initialization sequence is completed once the positive acknowledgement is received by the switching function.

In this figure, the computing function uses the Get Switching Function Capabilities service to obtain the capabilities of the switching function after the association has been established.

Figure 7-3 Explicit Association Created using ACSE - Initialization Sequence

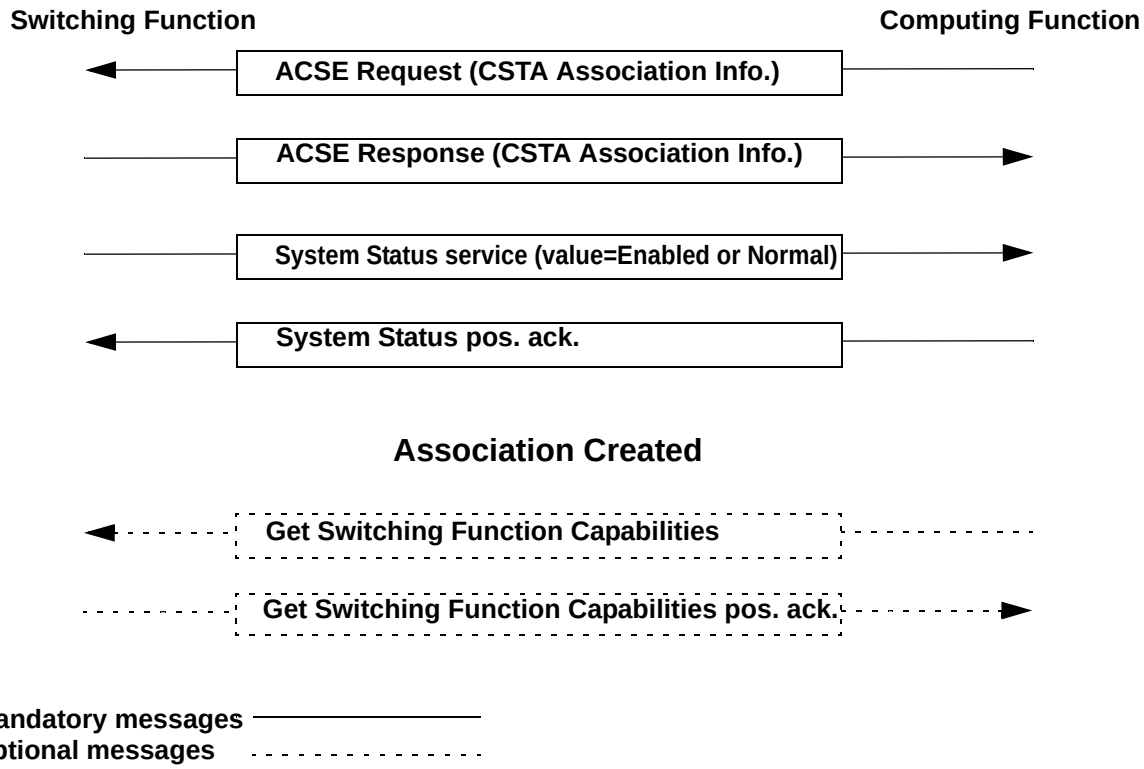

7.4 Explicit Association created using Ecma Application Session (ECMA-354) Services

In an explicit association created using Ecma Application Session Services, the computing function sends a CSTA Start Application Session service request to establish an application association.

The switching function shall respond with a positive acknowledgement.

The initialization sequence for an explicit association created using Ecma Application Session services is shown in Figure 7-4.

In this figure, after the application association is created, the computing function uses the Get CSTA Features service to obtain the supported services and events.

Next the application uses the System Register service to register with the switching function to receive System Status services.

© ISO/IEC 2007 – All rights reserved

Copyright International Organization for Standardization
Provided by IHS under license with ISO
No reproduction or networking permitted without license from IHS
Not for Resale

Some time later the switching function sends a System Status request to the application to notify it of a change in system status.

Figure 7-4 Explicit Association Created Using Ecma Session Control Services

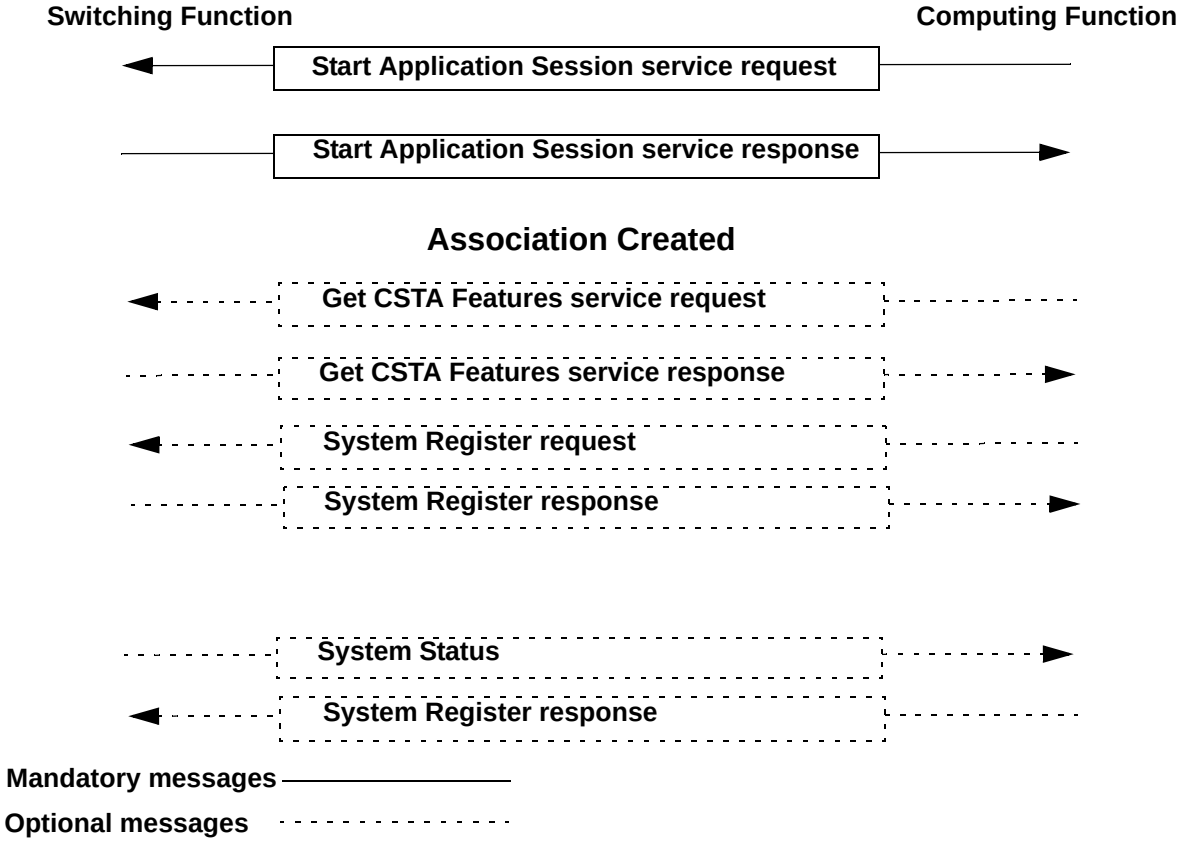

8 Security Service

All CSTA messages provide:

- Timestamp information. This can be used to determine the “freshness” of a message.
- A Message Sequence Number. This provides a capability to number messages in a sequence so that the message receiver can detect that a message has been received out of sequence.
- Security Information. Support the implementation of a security process. This can be used to provide security such as access control and authentication. The format of this information is implementation specific.

For more information, refer to 12.2.12, “CSTASecurityData”, on page 114.

9 Generic Service Requirements

9.1 Service Request

This Standard defines a set of CSTA operations that can be used to control and observe objects within a switching and/or special resource function. The CSTA operations are defined as “Services” in which one function requests, across the service boundary, that the other function perform a given CSTA operation. Services are defined for the CSTA service boundaries between the computing function, switching function, and

© ISO/IEC 2007 – All rights reserved

special resource function. Services are defined in terms of what they accomplish (i.e. functionality), not how they should be implemented.

When one function sends a service request to the other function to perform a service with a given set of parameter values, it is called a *service request*. Each service defined in this Standard falls into one of following categories based upon the direction of the service request:

- *Switching Function Service* - Switching function services are services where the computing function is the client (i.e., service requestor) and the switching function is the server. An example of a switching function service is the Make Call service.
- *Computing Function Service* - Computing function services are services where the switching function is the client (i.e., service requestor) and the computing function is the server. An example of a computing function service is the Route Request service.
- *Special Resource Function Service* - Special Resource function services are services where the computing function is the client (i.e., service requestor) and the special resource function is the server. An example of a special resource function service is the Play Message service for a Voice Unit device when it is part of the Special Resource Sub-Domain.
- *Bi-directional Service* - Bi-directional services are services where either the switching/special resource function or the computing function can be the client (i.e., service requestor). An example of a bi-directional service is the System Status service.

Some switching/special resource functions implementations support registration mechanisms that allow the computing function to indicate that it would like to receive service requests in a certain category (e.g., routeing, system status, escape) from the switching/special resource functions. (If the switching/special resource function indicates that it supports the computing function services in a particular category but does not support the registration mechanism, the computing function shall be prepared to handle the requests without previous registration.)

If the server detects that a service request is invalid, a negative acknowledgement shall be generated.

Every service request and service response defined in this Standard allows the inclusion of non-standardized, private data, that shall be informational in nature. Refer to 9.4, “Vendor Specific Extensions”, on page 93, for more information.

9.2 Service Response (Acknowledgements)

The other part of a service is the acknowledgement to the service request. This acknowledgement is used by the requesting function to verify that the other function has received the service request and that some level of processing has been performed with respect to the service. There are two types of acknowledgements: *positive acknowledgements* and *negative acknowledgements*, for a given service, as well as two types of positive acknowledgement models which a given service can adhere to. These definitions are documented in the following sections.

Note that there are some services defined in this Standard that do not provide a positive acknowledgement. For these services, if the service request is invalid, a negative acknowledgement shall be generated.

9.2.1 Positive Acknowledgement Models

All acknowledgements to each service request defined in this Standard shall follow the principles outlined by one of two models defined below. The computing function learns which model a switching function supports for each service through the capability exchange services described in Clause 13, “Capability Exchange Services”, beginning on page 149.

© ISO/IEC 2007 – All rights reserved

Copyright International Organization for Standardization
Provided by IHS under license with ISO
No reproduction or networking permitted without license from IHS
Not for Resale

9.2.1.1 Atomic Model

Switching functions that indicate support of the atomic acknowledgement model designate that the particular service request can be accomplished in a single logical step. This acknowledgement model reflects whether or not the service request has meet the completion conditions as documented by each individual service.

An atomic positive acknowledgement indicates that not only were the parameters on the service request valid, but the switching function has successfully completed the service requested as defined in that service's "Service Completion Conditions" section. The condition of the call(s) and/or connection states of the device(s) associated with the service request have transitioned to that service's Operational Model After state.

9.2.1.2 Multi-Step Model

Switching functions that indicate support of the multi-step acknowledgement model designate that the particular service request is accomplished as its name implies, in multiple logical steps. This acknowledgement model reflects whether or not the parameters passed on the service were valid but does not guarantee anything as far as the completion conditions is concerned for the service.

A multi-step positive acknowledgement guarantees only that the parameters passed on the service request were accepted by the switching function to be valid. This positive acknowledgement does not determine if the service request's completion criteria are met. (However, depending on the switching function, the positive acknowledgement may indicate, in certain situations, the service request's completion conditions.) Therefore the computing function shall monitor for events associated with the particular service request, affected call(s) or device(s) to verify completion. A computing function shall also be prepared to handle the Service Completion Failure event and/or the Failed or Connection Cleared events after receiving the positive acknowledgement. The Service Completion Failure event will only be reported to the computing function which issues the service request *and* has a device-type monitor on the device which has or had connection(s) that were used in the particular request. Each of these events are provided by the switching function to indicate that the completion conditions for the service was not met.

If, through the event flow, a failure is detected, it is up to the computing function to apply the appropriate recovery to return the call(s) and/or device(s) back to the original conditions (if needed). Finally, a computing function should not issue subsequent service requests for a device until a previous multi-step service request's completion conditions has been satisfied. Doing so may result in unpredictable results generated by the switching function.

9.2.2 Negative Acknowledgement

A negative acknowledgement indicates that the service request has failed and the condition of the call(s) and/or connection states of the device(s) associated with the service request have not changed as a result of the failure (i.e., they remain as they were in the service's Operational Model Before state).

9.3 Diagnostic Error Definitions

CSTA provides diagnostic error information in the negative acknowledgement to service requests. The diagnostic error information consists of an error category and a category specific error value.

The definitions associated with the error categories and the error codes apply equally to services requested by a computing function and to those requested by a switching function. An error value indicates the server's best evaluation of the condition that caused the server to send a negative acknowledgement to the service request.

9.3.1 Error Categories

The error categories consist of the following:

- Operation Errors - Error values in this category shall indicate an error in the service request.
- Security Errors - Error values in this category shall indicate a security error.

© ISO/IEC 2007 – All rights reserved

Copyright International Organization for Standardization
Provided by IHS under license with ISO
No reproduction or networking permitted without license from IHS Not for Resale

- State Incompatibility Errors - Error values in this category shall indicate that the service request was not compatible with the condition of a related CSTA object.
- System Resource Availability Errors - Error values in this category shall indicate that the service request could not be fulfilled because of a lack of system resources within the serving sub-domain.
- Subscribed Resource Availability Errors - Error values in this category shall indicate that the service request could not be fulfilled because a required resource must be purchased or contracted by the client system.
- Performance Management Errors - Error values in this category shall indicate that an error has been returned as a performance management mechanism.
- Private Data Information Errors - Error values in this category shall indicate an error in the CSTA Private Data of the service request. The reason(s) why the private data is incorrect is not relevant to this Standard.
- Unspecified Errors - Error values in this category shall indicate that the error did not belong to any of the other error value categories.

9.3.2 Error Values

The following definitions are used in all services to ensure a uniform meaning for error codes.

- Error codes reflect why the server could not carry out the service request on the specified call, device, or connection and do not reflect the status of any other call, device or connection.
- Error codes reflect why the server could not perform the request at the time that it attempted to execute the request. Thus a switching function will return the same error code in the same circumstance regardless of the past history of any object involved in the request.
- This Standard does not require that service parameters are validated in any order. Thus, when there are multiple errors in parameters (or when multiple errors apply to a single parameter), the computing function may receive any of the applicable errors.
- There is a hierarchy of error return values. The errors range from one high level error that spans all errors (Generic Unspecified) to specific detailed errors. The diagram below shows the hierarchy. The errors become more detailed toward the bottom of the diagram.

© ISO/IEC 2007 – All rights reserved

Copyright International Organization for Standardization
Provided by IHS under license with ISO
No reproduction or networking permitted without license from IHS
Not for Resale

Figure 9-1 ErrorValue Hierarchy

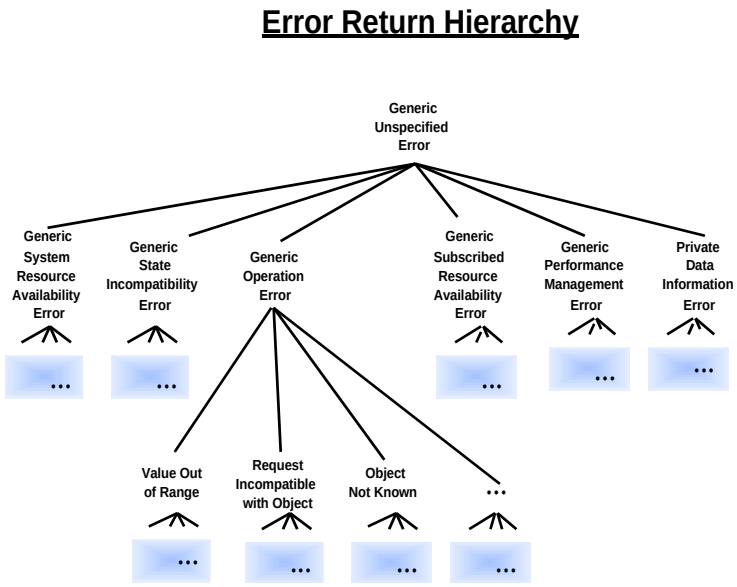

The specific error values are defined in 12.2.14, “ErrorValue”, on page 115.

9.4 Vendor Specific Extensions

This Standard allows the provision of value added services and events that are beyond what is defined in this Standard. It is possible both to extend the existing services and events defined in this Standard as well as to create completely new services and events. A vendor may choose to support a vendor specific extension with the understanding that it may not interoperate with other CSTA (Phase III)-compliant products.

9.4.1 Private Data

Every service in this Standard allows for the inclusion of implementation-specific *private data*. This may be any supplemental information (not defined by this Standard) which provides access to vendor-specific extensions.

The computing function and the switching function, by mutual agreement (e.g., using the private data negotiation mechanism described below), assume full responsibility for the structure, representation (including byte order) and interpretation of this data. It is recommended that vendors adopt a platform independent encoding scheme (e.g., ASN.1/BER) for their private data.

If an implementation receives private data in a CSTA service or event that it does not recognize, it shall ignore the private data and process the rest of the CSTA service or event.

The size of private data is not limited by this Standard and is switching function and/or computing function specific. The capabilities exchange services can be used by the computing function to determine the maximum size used by the switching function implementation.

© ISO/IEC 2007 – All rights reserved

Copyright International Organization for Standardization
Provided by IHS under license with ISO
No reproduction or networking permitted without license from IHS
Not for Resale

9.4.1.1 Private Data Version Negotiation

Private data version negotiation may be performed using the following process:

1. The switching function provides the computing function with its manufacturer name in the positive acknowledgement of the Get Switching Function Capabilities service. By associating the manufacturer name with information in the computing function, the computing function can determine if it supports the switching function's private data and its associated private data version negotiation mechanism. The switching function may also provide its supported private data versions in the Get Switching Function Capabilities acknowledgement.
2. The computing function will send the version to be used in the Private Data Version service request. The computing function may change the negotiated version by sending Private Data Version service requests at any time.

9.4.1.2 Private Data on CSTA Services and Events

For the services defined in this Standard, the use of private data allows vendor specific parameters to be added to each service. Private data should only be used to extend the existing definition of a service, and never to redefine the meaning of a service or any of its specified parameters. If a completely new vendor specific service is to be defined, the Escape service shall be used.

Private data can also be used to provide vendor specific parameters on events. As with services, private data should only be used to extend the existing definition of an event, and never to redefine the meaning of an event or any of its specified parameters. If a completely new event is to be defined, the Private event shall be used.

9.4.2 Escape Services and Private Event

The Escape service and the Private event are unique in that they include only private data and no other service specific parameters. Furthermore, they do not have any defined intent or meaning other than to allow for vendor specific extensions. The Escape service and the Private event may be used to define completely new services and events (i.e., ones not defined in this Standard), respectively.

9.4.2.1 Escape Registration

Before the computing function can receive any Escape service requests, it may be required to register with the switching function for escape services using the Escape Register service. The positive acknowledgement to this service contains the escape register identifier (escapeRegisterID) that the computing function uses to identify service requests that arrive for this registration.

If the switching function supports the Escape Registration services, then the computing function shall use the Escape Register services to register for escape services before it can receive any Escape service requests. If the switching function does not support the Escape Registration services, then the computing function may receive Escape service requests at any time. The capabilities exchange services can be used to determine if the switching function supports the Escape Registration services.

An escape registration can be cancelled using the Escape Register Cancel service. Once the switching function sends a positive acknowledgement to this, it will no longer send Escape service requests to the computing function. Additionally, the switching function can cancel an escape registration at any time by sending the computing function an Escape Register Abort service request.

While the Escape service itself is bi-directional, the Escape Registration services are not. These services are only issued by the computing function. The switching function does not register with the computing function for escape services. The switching function is considered to be (implicitly) registered to receive Escape service requests from the computing function at any time. The computing function never needs an escape registration to issue an Escape service request.

© ISO/IEC 2007 – All rights reserved

Copyright International Organization for Standardization
Provided by IHS under license with ISO
No reproduction or networking permitted without license from IHS
Not for Resale

9.4.2.2 Private Data Version Service

The Private Data Version service is used by the computing function to negotiate a private data version (or to negotiate no private data). The Private Data Version service can be used as needed to re-negotiate (i.e., change) the private data version being used by the computing and switching functions.

9.4.2.3 Escape Service

The Escape service is used to request completely new, vendor-specific services not defined by this Standard. This service is bi-directional (i.e., can be issued by either the switching function or computing function). The vendor specific parameters to the Escape service request are transported by the private data (privateData) parameter to the service request. It is the responsibility of the vendor to define any extended services and the contents of the private data for these services.

The Escape service request may contain an escape registration identifier (escapeRegisterID) to identify the associated escape registration (when escape registration is supported by the switching function). An Escape service request from the computing function should never contain an escape registration identifier.

Escape service requests are always acknowledged by a positive or negative acknowledgement from the serving function (i.e., computing function or switching function processing the service request).

9.4.2.4 Private Event

The Private event is used to report completely new, vendor-specific events not defined by this Standard. As with other events, the computing function shall use the monitoring mechanism (i.e., Status Reporting services) in order to receive Private events. The type of monitors (i.e., call-type or device-type) on which a Private event is reported is switching function implementation specific. The monitor cross reference identifier (monitorCrossRefID) parameter associates the event with the monitor. There is no mechanism defined to allow the computing function to send Private events to the switching function.

The vendor specific parameters associated with the Private event are transported by a private data (privateData) parameter. It is the responsibility of the vendor to define any extended events and the contents of the private data for these events.

9.5 General Services and Event Functional Requirements

The following sections discuss functional requirements that are applicable to the services and events specified in this Standard.

9.5.1 Services

1. If a service is performed manually from a device, computing functions that have device-type or call-type (for device or call) monitors on this device receive the same event sequence as reported when performing the service through the service boundary (i.e., computing function-initiated). Refer to the appropriate service's "Monitoring Event Sequence" sections for details.

   Depending on the particular switching function, additional events may also be reported as part of manual invocation services. For example: [3)]

   - A Held event, if the device already has an active call.
   - A Service Initiated (event cause of NewCall) event for the device because a new call is needed to execute the service manually. This is followed by a Connection Cleared (event cause of Normal Clearing) event for the device when the service has been executed.

3) These events are only reported if the computing function has the appropriate monitors started for the device (i.e., correct filters and type of monitor) and those monitors are supported by the switching function.

© ISO/IEC 2007 – All rights reserved

Copyright International Organization for Standardization
Provided by IHS under license with ISO
No reproduction or networking permitted without license from IHS Not for Resale

- Logical and Physical device events that are associated with the execution of the service. These events may appear any time during the execution of the service.

2. If a service request is invoked after a device has manually gone off-hook (Service Initiated event), an implementation may either accept the service or it may reject the service. If it accepts the service, (unless otherwise specified for a particular service or event), the connection that has gone off-hook will be cleared and the computing function will receive a Connection Cleared event, followed by service specific events.
3. Other than for calls in the Initiated state, a service only affects connections that are specified by its service description. If, prior to its completion, the execution of the requested service would cause the switching function to affect any other connections, then the service shall be rejected with a negative acknowledgement.
4. If the switching function permits the passing of Connection Identifiers without Call Identifiers, then the Device Identifiers they contain shall be within the switching sub-domain. In addition, if DeviceIDs only are passed in the Connection Identifiers, then:
   - If only one call exists at the specified device and the service request supports a single ConnectionID, its connection shall be in one of the initial states specified by the service or the service will be rejected.
   - If more than one call is in an initial state defined by the service, the service request will be rejected.
   - If two calls exist at the specified device and the service request supports two ConnectionIDs in the service request, the DeviceIDs within the ConnectionIDs shall be identical or the service will be rejected.
   - If two calls exist at the specified device and the service request supports two ConnectionIDs in the service request, both calls shall be a valid combination of initial states specified for that service or the service will be rejected.
   - If more than two calls exist at the specified device, the service will be rejected unless full and valid ConnectionIDs are specified.
5. If the device that is the subject of a service request is not capable of performing the service, a negative acknowledgement with an appropriate error code will be provided.
6. For optional parameters in service requests the following requirements apply:
   a. If an optional parameter is supported by the switching function but is not supplied in a service request, the switching function uses the specified default value associated with that parameter unless otherwise specified.
   b. If an optional parameter is not supported by the switching function, the switching function uses its administered value unless otherwise specified. (In addition, if the non-supported parameter is passed in the service request, see Services Requirement #7).
7. The switching function may either reject service requests that contain optional parameters that it does not support, or, it may accept the service request and ignore the unsupported optional parameters. However, the switching function shall handle unsupported optional parameters the same way for all service requests. The switching function indicates how it handles unsupported optional parameters via the capabilities exchange services.
8. When setting a value for a Physical or Logical Device Feature (specifically the “Set” features described in Clause 21, “Physical Device Features”, on page 414 and Clause 22, “Logical Device Features”, on page 460), the switching function shall return a positive acknowledgement when the feature is already set to the requested value specified in the service request. (Since the service request, in this case, did not result in a change of feature status, a feature event will not be generated.)

© ISO/IEC 2007 – All rights reserved

Copyright International Organization for Standardization
Provided by IHS under license with ISO
No reproduction or networking permitted without license from IHS
Not for Resale

9. It is the switching function's responsibility to verify that connections in a call are in their proper initial states prior to accepting a service request. Acceptable states are documented in each service request's description.

9.5.2 Events

1. For the same telephony situation, the event generated for a call-type monitor will be the same as the event generated for a device-type monitor, except that the localConnectionInfo and the servicesPermitted parameters described in the Call Control event descriptions are not provided for events generated for call-type monitors.
2. If the computing function has call-type monitoring in effect, the event seen for that monitor will be the same event as the one seen for the subject device from a device-type monitor.
3. If the Device Identifier portion of a Connection Identifier is a static Device Identifier, then that portion of the Connection Identifier and the Device Identifier parameters in an event will not necessarily be the same. For example, the switching function may have a static internal representation of a device which will be used in the Connection Identifier, but the actual diallable representation for the same device may be different and may be used in one of the Device Identifier parameters in the same event. This requirement is in addition to and does not supersede the definition for the Connection Identifier or Device Identifier parameters described in 12.3.9, "ConnectionID", on page 141 and 12.3.11, "DeviceID", on page 143.
4. The set of state transitions (refer to Figure 6-24, "Connection State Model" on page 51) supports the services and features documented in this Standard.

10 CSTA Device Identifier Formats

This clause describes the formats that may be used for Device Identifiers, their usage, and examples.

10.1 Device Identifier Formats

The possible types of Device Identifiers formats are:

- *Diallable Digits* - this format is a sequence of characters to be dialled to reach a device. The sequence of characters may contain diallable digits and/or special characters that specify to the switching function how digits should be dialled (“,” indicates that a pause should be inserted into the dialling sequence, for example). This format must be used when special dialling characters are required or when it is necessary to provide partial or incomplete dialling sequences.
- *Switching Function Representation* - this format is a sequence of characters that is used to reference devices within a switching sub-domain. In addition to specifying the directory number of the device, it also provides the ability to specify call appearance, agent identifier, subaddress, name, etc.
- *Device Number* - this format is an non-diallable, integer representation of a Device Identifier. This format of Device Identifier can be used to reference switching sub-domain devices that may not be typically associated with a diallable number such as trunks, line cards, etc.
- *URI Representation* - this format is a sequence of characters that is used to reference a logical or physical resource (e.g. device, user) using a Uniform Resource Identifier (URI) according to the guidelines in IETF RFC 2396.

In this section, the following example will be reflected. The called number is a subscriber in the US (country code 1) in San Jose (area code 408). The local number is 996 1010. The extension is 321. The name of the subscriber is “John Smith”.

© ISO/IEC 2007 – All rights reserved

Copyright International Organization for Standardization
Provided by IHS under license with ISO
No reproduction or networking permitted without license from IHS
Not for Resale

10.1.1 Diallable Digits

Generic Format: DD

A first character of the Device Identifier string which is not “N” indicates that the Device Identifier uses the Diallable Digits format. This format may contain from 0 (a *null formatted* Device Identifier) to 64 characters. DD is a string of dialling commands/digits. The following is the list of the complete set of permitted dialling commands/digits and their definitions:

0-9	These characters represents the number digits on a telephone keypad.
*****	This represents the “*” character, typically found on a telephone keypad.
#	This represents the “#” character, typically found on a telephone keypad.
A-D	These characters represent DTMF digits.
!	The exclamation mark indicates that a hookflash is to be inserted into the dial string.
P	The character P followed by a string of digits indicates that the string of digits is to be pulse dialled.
T	The character T followed by a string of digits indicates that the string of digits is to be tone dialled.
,	The comma character indicates that dialling is to be paused. The length of the pause is provided by the switching function through the capabilities exchange services. Multiple commas can be used to create a long pause.
W	The character W followed by a string of digits indicates that the string of digits is to be dialled only after dial tone has been detected by the switching function.
@	The “at” symbol indicates that the switching function shall wait for “Quiet Answer” before dialling the rest of the string. This means that the switching function shall wait for remote ringing indication, followed by 5 seconds of silence.
$	This dollar sign indicates that the switching function shall wait for the billing signal (i.e., credit card prompt tone) before continuing.
;	The semi-colon character indicates that the digit string is incomplete and more digits will be dialled using the Dial Digits service. This character may only be used in a Diallable String Device Identifier.
+	The plus sign indicates that this number is an international number format.

To aid in readability, the digit string may contain the following visual separators: “-”, “(“, and “)”.

Examples:

- If the number is called from France (country prefix 00[4)]), the string is “00,14089961010W321”.
- If the number is called from a switch in New York (dial 9 to get outside line), the string is “9,14089961010W321”.
- If the number is called from San Jose, the string is “9961010W321”.
- If the number is called from inside the subscriber’s PBX, the string is “321”.
- +1(408)555-1212 indicates an international number that includes visual separators for readability.

4) The country prefix is the sequence of digits that needs to be dialled to make an international call (011 when calling from the US). It is always followed by the called country code.

© ISO/IEC 2007 – All rights reserved

Copyright International Organization for Standardization
Provided by IHS under license with ISO
No reproduction or networking permitted without license from IHS
Not for Resale

Functional Requirements:

1. The switching function shall accept, as a minimum, digits 0-9 of this format when the computing function wants to make a call.
2. The diallable digits format shall be used to represent a device's dialling sequence. A device's dialling sequence is a string of outband digits used to initiate a call with another device. When placing a call from a device to another device, there are basically two ways a device's dialling sequence can be used:
   a. The entire sequence of digits is dialled to reach the destination. This is the most common way to place a call.
   b. The dialling sequence is broken up into a number of stages in order to execute and complete the call. This is called "multi-stage" dialling in this Standard. This type of dialling is needed in cases where the switching function prompts the device for more digits (by sending dial tone again or some other tone).

Note that switching functions support different combinations of dialling sequences.

10.1.2 Switching Function Representation

Generic Format: N<DN!SA&CA/EXT%AID>NM (*in this order*)

The syntax of the generic format is broken down as follows:

N The "N" character at the beginning of the Device Identifier string (which is 2 to 64 characters in length) indicates that the Device Identifier uses the Switching Function Representation format. At least one of the following components needs to be present in this format:

< > The angled brackets characters encompass the string when a name (NM) string representing the person associated with the device is provided after the ">" character. If the character "<" is not the first character in the string after the N then the string will not have a name string associated with it.

DN The first string of characters represents the Directory Number (DN) associated with the given device. The Directory Number shall contain characters selected from the following set: "0" through "9", "*", "#", DTMF digits "A" through "D". The "+" character as a prefix indicates that the number is an international number format. To aid in readability, the device identifier string may contain the following visual separators: "-", "(", and ")". The Directory Number may use any of the following notations (refer to ECMA-155, ITU-T Rec. E.131):

- Implicit TON (Type Of Number), (*example*: "0014089961010"[5)])
- PublicTON - unknown
- PublicTON - international number, (*example*: "14089961010")
- PublicTON - national, (*example*: "4089961010")
- PublicTON - subscriber, (*example*: "9961010")
- PublicTON - abbreviated, (*example*: "17")
- PrivateTON - unknown
- PrivateTON - level 3 regional, (*example*: "41396557321")
- PrivateTON - level 2 regional, (*example*: "96557321")
- PrivateTON - level 1 regional, (*example*: "557321")

5) This example is a caller in France dialling the country prefix (00), the USA country code (1), the trunk code (408) and the subscriber number.

© ISO/IEC 2007 – All rights reserved

Copyright International Organization for Standardization
Provided by IHS under license with ISO
No reproduction or networking permitted without license from IHS
Not for Resale

- PrivateTON - local, (*example*: “321”)
- PrivateTON - abbreviated, (*example*: “2”)
- Other (other numbering plans)
- Generic (the notation is unknown)

! This exclamation mark character represents the start of a Sub-Address (SA) string. If the “!” character is not present, then there will be no sub-address associated with this Device Identifier string. The termination character for the sub-address string will be the next key character found in the string or null.

& The ampersand symbol represents the start of a Call Appearance (CA) string. It is added to the logical element’s device identifier to uniquely identify an addressable standard appearance. The value of the string is switching function specific. The valid characters for the call appearance string are 0-9. The termination character for the call appearance string will be the next key character found in the string or null. Refer to 6.1.1.2.1, “Appearance”.

/ The slash symbol represents the start of a physical element extension (EXT) string. It is added to the logical element’s device identifier to uniquely identify a bridged appearance. Its value is the physical element’s device identifier that is associated with the appearance. The termination character for the physical element extension string will be the next key character found in the string or null. Refer to 6.1.1.2.1, “Appearance”.

% The percent sign represents the start of an Agent ID (AID) string. This string represents an ACD agent identifier associated with a device. This string may be present when the computing function wants to focus a service at a specific agent identifier that is associated with a device or when the switching function generates an event that is associated with a particular device and agent. The valid characters for the agent identifier string are A-Z and 0-9. If the “%” character is not present then there will be no agent identifier associated with this Device Identifier string. The termination character for the agent identifier string will be the next key character found in the string or null.

~ The tilde sign represents the start of a resource ID (RID) string that indicates the resource identifier associated with a device. This string should be present either when the computing function wants to focus a service at, or when the switching function generates an event that is associated with a particular resource of the device. The format for a valid resource identifier string is specified in 12.3.25.

NM The name string (NM) represents the person associated with the device. This string can be used for selecting a Device Identifier associated with a user or for logging and informational purposes. The name string may contain any character. This can be used to represent a SIP URI, for example.

Examples:

- If the Device Identifier is PublicTON International, then the string can be “N14089961010”.
- If the Device Identifier is PublicTON Subscriber, then the string can be “N<9961010>John Smith”.
- If the Device Identifier represents a SIP user, then the following strings can be used:
  - SIP URI: “N<>sip:JohnSmith@anycompany.com”.
  - SIP URI and a display name: “N<>John Smith<sip:JohnSmith@anycompany.com>”
  - DN, SIP URI, and a display name: “N<9961010>John Smith<sip: JohnSmith@anycompany.com>”

© ISO/IEC 2007 – All rights reserved

Copyright International Organization for Standardization
Provided by IHS under license with ISO
No reproduction or networking permitted without license from IHS
Not for Resale

Functional Requirements:

1. This format shall always contain at least a directory number string, an agent ID string, or a name string.
2. The interpretation of additional digits beyond those that are required to reach a destination are switching function specific.
3. When there is more than one bridged appearance associated with a single physical element (see 6.1.1.3.6, “Hybrid”, on page 24 for an example) there are two methods for representing these appearances: One is to have a unique call appearance (CA) and physical element extension (EXT) combination for each appearance where EXT is used to represent the given physical element and CA is used to represent multiple appearances associated with the same physical element. The other is to have a single EXT for each appearance, independently of their association with the physical element. In either case, the resulting Device Identifier is unique for the given appearance.

10.1.3 Device Number

Generic Format:

The Device Number format represents a Device Identifier using an integer.

10.1.4 URI Representation

The URI Representation format represents a Device Identifier using a Uniform Resource Indicator (URI).

Generic Format:

<scheme>:<scheme-specific-part>

A Device Identifier character string that contains the colon character “:” uses the URI Representation. The type of URI scheme defines the syntax of the scheme-specific-part. The types of schemes and the specification of the syntax for the scheme-specific-part are outside the scope of this Standard.

Note that the Device Identifier string may contain additional information other than a URI. An example is a display name that is frequently used in SIP header fields along with a SIP URI.

Examples:

sip:user@domain.com

sip:+16505551212@domain.com; user=phone

tel:+14085551212

<user name> sip:user1@domain.com

10.2 Functional Requirements

1. If the switching function detects a problem with a Device Identifier, the service will be rejected with a negative acknowledgement.
2. The switching function may use any format in service acknowledgements and events.
3. For Device Identifiers in service requests, the computing function should check the deviceIDFormat parameter in a capabilities exchange service to determine:
   - Which formats are supported.
   - For the Switching Function Representation format, which notations are supported.
   - For the Diallable Digits format, which special characters are supported.

© ISO/IEC 2007 – All rights reserved

Copyright International Organization for Standardization
Provided by IHS under license with ISO
No reproduction or networking permitted without license from IHS Not for Resale

4. Using the Diallable Digits Format, a null formatted Device Identifier (i.e., a Device Identifier field with 0 characters) can be specified. Some implementations that include only one device in their CSTA Application Working Domain may allow this device to be referenced with a null formatted Device Identifier. For example: callingDevice in the Make Call service, snapshotObject in the Snapshot Device service, monitorObject in the Monitor Start service, physical and logical device features, etc. Unless otherwise noted in this Standard, the interpretation of a null formatted Device Identifier is switching function specific.

11 Template Descriptions

This Clause explains the template formats used to describe the CSTA services, events, and parameter types defined in this Standard.

11.1 Service Template

The following sections describe the Services template components.

11.1.1 Service Description

This is textual description of the service that may be followed by a figure. The figure is included when a service affects a connections state(s). The figure defines the role of devices and connections from a before/after service execution perspective. Note that this figure indicates the successful completion of the service but does not indicate the service completion criteria (see the Monitoring Event Sequences for the service completion criteria).

In order to describe the nomenclature used in the figures in the templates, the figure from the CSTA Answer Call service follows:

Figure 11-1 Example of a Figure in a CSTA Service (Answer Call)

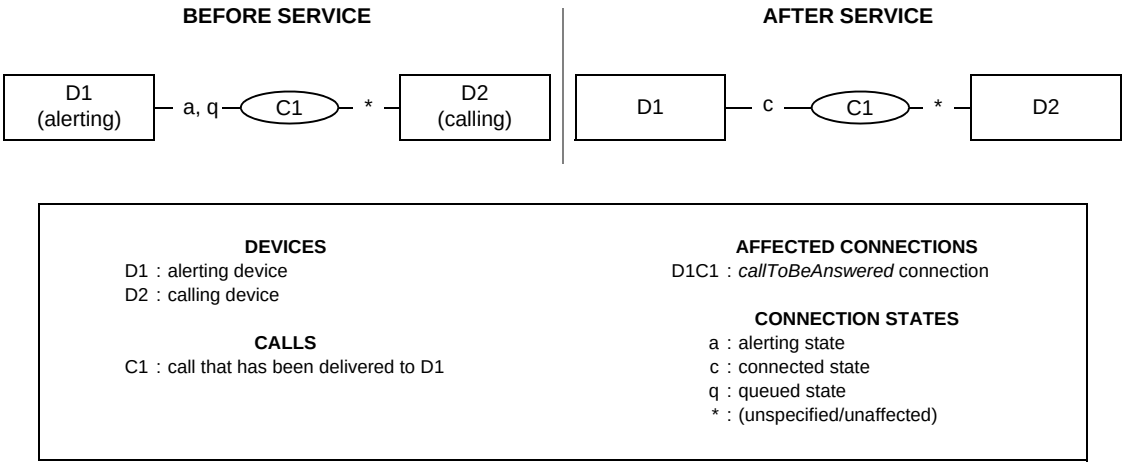

In the figures, small boxes (labeled Dx) are used to represent devices, lines represent connections, ovals (labeled Cx) represent calls, and dotted lines represent connections with partial (“Call ID only”) connection identifiers (see 6.7.2). The legend (large box) associates names with devices and calls. Names in italics refer to parameter names used in the service.

The connections are labeled with the set of possible connection states. In some cases the following symbols are used in place of a specific connection state:

“*” indicates that the connection state is not specified and it is not affected by the service

© ISO/IEC 2007 – All rights reserved

Copyright International Organization for Standardization
Provided by IHS under license with ISO
No reproduction or networking permitted without license from IHS
Not for Resale

“!” indicates that the connection state is unspecified but may be affected by the service

“#” indicates that the connection state is not specified but the connection state is inherited from a connection that used to exist (for example, when a connection at a device changes its call identifier).

“@” indicates any non-Null connection state.

11.1.2 Service Request

This section contains a table with the possible parameters in the service request. Associated with each parameter are:

- Parameter Name (“Parameter Name”) - This is used to reference the parameter from other parts of the template and to distinguish the parameter from other parameters with the same parameter type. An example of a parameter name is connectionToBeCleared.
- Parameter Type (“Type”)- This is the parameter type as defined in Clause 12, “Parameter Types”, on page 105. In most cases a parameter type references a parameter type defined in either 12.2, “Defined Parameter Types”, on page 106 (CorrelatorData, for example) or 12.3, “Identifier Parameter Types”, on page 137 (ConnectionID, for example). In other cases the parameter type may be a Boolean, Value, Enumerated, etc. Refer to 12.1, “Definitions”, on page 105 for more information.
- Parameter Optionality (“M/O/C”) - Indicates whether the parameter must be included (M for mandatory), if the parameter is optional (O), or if the parameter is conditional (C). If a parameter is conditional, then there are specific requirements when the parameter must be supported. These requirements are described in the parameter description column.
- Parameter Description (“Description”) - This is a brief description of the parameter in the context of the service. A description of the parameter in the context of its parameter type can be found with its parameter type description in Clause 12, “Parameter Types”, on page 105.

11.1.3 Service Response

This section includes:

- a description of the type of acknowledgement model that can be used with the service (see 9.2.1, “Positive Acknowledgement Models”, on page 90).
- a table that contains all of the parameters in the positive acknowledgement. The format of the table is the same as in the service request (see 11.1.2).
- a reference to the negative acknowledgement error codes.

11.1.4 Operational Model

The operational model consists of:

Connection State Transitions - This is a table with all possible connections affected by the service. Associated with each connection is the:

- Connection Name (“Connection”) - This is used to reference the connection from other parts of the template including the figure in the service description.
- Initial State (“Initial State (Required)”) - This is the set of allowed initial states (connection states before the service is executed). An implementation shall support one or more of the specified initial states associated with a service (as indicated in the capability exchange services).
- Final State (“Final State”) - This is the set of allowed final states (connection states after the service is executed). An implementation shall support one or more of these states. In many cases there are

© ISO/IEC 2007 – All rights reserved

Copyright International Organization for Standardization
Provided by IHS under license with ISO
No reproduction or networking permitted without license from IHS
Not for Resale

statements following the connection state transition table that further describe or clarify the information in the table.

Monitoring Event Sequences - For services that affect connections, this section includes tables that describes the event sequence generated for device-type and call-type monitors. Unless otherwise specified, the events (and associated causes) in this table are required as part of the service completion criteria. Each table contains:

- Monitored Device or Monitored Call (“Monitored Device” or “Monitored Call”) - For the device-type monitoring table, this indicates the monitored device. For the call-type monitoring table, this indicates the monitored call. The names can be used to reference back to the figure in the service description.
- Connection Name (“Connection”) - This column indicates the connection that is the subject of the event.
- Event (“Event”) - This is the name of the event generated as the result of the service.
- Event Cause (“Event Cause”) - This is the set of possible cause codes associated with the event. In many cases there are statements following the connection state transition table that further describes or clarifies the information in the table.

Functional Requirements - The functional requirements contain additional requirements associated with the service.

11.2 Event Template

The following sections describe the Event Template components.

11.2.1 Event Description

This is textual description of the event followed by an optional figure. The figure is included when an event indicates a change in one or more connections. The figure defines the role of devices and connections from a before/after perspective. The nomenclature used in the figures is described in 11.1.2, “Service Request”.

11.2.2 Event Parameters

This section consists of a table that contains all of the parameters in the event. The format of the table is the same as in the service request table described in 11.1.2, “Service Request”.

11.2.3 Event Causes

This section consists of a table that contains all of the possible cause codes that can be included with the event. Associated with each cause code are:

- Event Cause (“Event Cause”) - This is the event cause name.
- Event Description (“Description”) - This is a description of the event cause in the context of the event.
- Associated Features (“Associated Features”) - This is the complete set of possible features associated with the cause code. A feature may either correspond to a CSTA service or it may be associated with switch features specified in 6.7, “Additional Services, Features & Behaviour”, on page 69.

11.2.4 Functional Requirements

Functional requirements contain additional requirements associated with the event.

11.3 Parameter Type Template

The following sections describe the Parameter Template components:

--`,,```,,,,````-`-`,,`,,`,`,,`---
© ISO/IEC 2007 – All rights reserved
Copyright International Organization for Standardization
Provided by IHS under license with ISO
No reproduction or networking permitted without license from IHS
Not for Resale

11.3.1 Parameter Type Description

This contains a description of the parameter type.

11.3.2 Format

This section specifies the format of the parameter type. For example, it could list the possible values associated with a parameter type (enumerated list).

For parameter types that are a type of device identifier, the format contains the allowed statuses associated with the parameter type (e.g. “Not Known”).

11.3.3 Functional Requirements

Functional requirements contain additional requirements associated with the parameter type.

12 Parameter Types

12.1 Definitions

This clause describes the parameter types for the parameters described in this Standard. There are five sets of parameter types:

1. *Basic parameter types* are simple types that are not necessarily specific to these specifications. The basic parameter types used in this Standard are:
   - *Boolean* - Either TRUE or FALSE.
   - *Value* - Integer value with a length of 4 bytes always.
   - *Characters* - Character string of varying lengths, as specified in specific services or events.
2. *Meta parameter types* refer to constructions that combine one or more parameter types. The meta parameter types used in this Standard are:
   - *Bitmap* - Multiple values may be set in a specified set.
   - *Enumerated* - One value only may be set in a specified set.
   - *Structure* - A combination of different types combined into one parameter type, as defined in a specific service or event. Multiple components may be present in the structure (each component in the structure is defined as mandatory, optional, or conditional).
   - *Choice Structure* - Like *Structure*, but one and only one component in the structure is present.
   - *List* - List of a single specified parameter type or structure
3. *Defined parameter types* are specific to this Standard. They are briefly defined in Table D-1 on page 106, and further defined in the pages indicated.
4. *Identifier parameter types* are specific to this Standard. They are briefly defined in Table D-1 on page 137, and further defined in the pages indicated.
5. *Capability bitmap parameter types* are bitmaps included in the Get Physical Device Information, Get Logical Device Information and Get Switching Function Capabilities services. They are defined in Annex B.

© ISO/IEC 2007 – All rights reserved

Copyright International Organization for Standardization
Provided by IHS under license with ISO
No reproduction or networking permitted without license from IHS
Not for Resale

12.2 Defined Parameter Types

Defined parameter types specific to these specifications are summarized in the following table.

Table 12-1 Defined Parameter Types Summary

Defined Parameter Type	Description	Pg.
12.2.1 AccountInfo	Contains computing sub-domain/business specific code that is to be applied or has been applied to a call for accounting purposes.	107
12.2.2 AgentPassword	Specifies the agent password.	107
12.2.3 AuthCode	Contains an authorization code that the switching function understands and will use to check to see if the user of the computing sub-domain is authorized to perform the given service.	107
12.2.4 CallCharacteristics	Specifies the high level characteristics of the call.	108
12.2.5 CallLinkageData	Specifies the globally unique information that is used to associate CSTA calls that are linked by a switching function because of the way the call was created or manipulated.	108
12.2.6 CallQualifyingData	Specifies information such as wrap codes, walk away codes, hold reasons, transfer reasons, etc. that describes or helps qualify how a call is being (or has been) handled by a user.	110
12.2.7 ChargingInfo	Specifies information that represents a cumulative value of charging or currency units charged to a device for a call in which the device was involved.	110
12.2.8 ConnectionInformation	Specifies the connection information associated with the subject connection.	111
12.2.9 ConnectionList	Specifies the list of devices/connections that are known to the switching function, and which remain in the call after a conference or transfer.	112
12.2.10 CorrelatorData	Contains computing sub-domain-specific data that has been or will be attached to a call that the computing sub-domain is controlling or monitoring.	112
12.2.11 CSTAPrivateData	Provides a mechanism for providing non-standard parameters in events.	113
12.2.12 CSTASecurityData	Specifies the security attributes associated with the message.	114
12.2.13 DeviceHistory	Specifies the list of devices that had been previously associated with the call.	114
12.2.14 ErrorValue	Contains hierarchical error codes.	115
12.2.15 EventCause	Provides additional information on why the event was generated.	126
12.2.16 LanguagePreferences	Specifies the preferred language(s) associated with the call.	129
12.2.17 LocalConnectionState	Describes the connection state of the device associated with the Monitor Cross Reference ID.	130
12.2.18 MediaCallCharacteristics	Specifies the media class (Voice, Digital Data, etc.) and media characteristics of the call.	130
12.2.19 MediaServiceType	Specifies which media service is to be (or has been) attached to or detached from a particular call or connection.	132
12.2.20 MessageInfo	Specifies the message information associated with a call.	133
12.2.21 MonitorFilter	Specifies the events are filtered for a Monitor Start service.	134
12.2.22 ServicesPermitted	Specifies the set of services that the switching function permits to be applied to a connection.	134
12.2.23 SimpleCallState	Provides the simple call state.	135
12.2.24 SubjectOfCall	Indicates the subject or intent of the call.	135
12.2.25 SystemStatus	Indicates the reason for the System Status service request.	136
12.2.26 TimeInfo	Specifies the date and time.	136
12.2.27 UserData	Contains device-to-device or computing sub-domain-to-computing sub-domain data.	136

© ISO/IEC 2007 – All rights reserved

Copyright International Organization for Standardization
Provided by IHS under license with ISO
No reproduction or networking permitted without license from IHS
Not for Resale

12.2.1 AccountInfo

The AccountInfo parameter type contains a computing sub-domain/business specific code that is to be applied or has been applied to a call for accounting purposes.

Format

This parameter type is a character string.

Functional Requirements

1. The management of the account code data is done by the switching function. To understand how the switching function maintains this information with the call, you need to consult the switching function specific documentation.
2. The computing sub-domain will only be notified that the account code data has been added or changed through the Call Information event. This event will be generated when the user enters the account code data manually or after a service has added or changed the data.
3. The way to clear the data on the call is to pass a null string of data on one of the above mentioned services. (The actual parameter is passed, but the content is a null string.)
4. The switching function may choose to filter this information by not providing it in events for security reasons.
5. When this information is being attached to a call through a service request, its association shall be completed prior to any state transitions resulting from the request. Thus any state transition events which contain this parameter shall contain the information passed on the request.

12.2.2 AgentPassword

The AgentPassword parameter type specifies the password for an ACD agent.

Format

This parameter is a character string.

12.2.3 AuthCode

The AuthCode parameter type contains an authorization code that the switching function understands and will use to check if the computing function is authorized to perform a given service.

Format

This parameter type is a character string.

Functional Requirements

1. If the switching function requires this parameter, and either the authorization code supplied is not valid or the parameter type is not supplied, then the service will be rejected with a negative acknowledgement.
2. The switching function may choose to filter this information by not providing it in events for security reasons.
3. When this information is being attached to a call through a service request, its association shall be completed prior to any state transitions resulting from the request. Thus any state transition events which contain this parameter shall contain the information passed on the request.

--`,,```,,,,````-`-`,,`,,`,`,,`---

© ISO/IEC 2007 – All rights reserved

Copyright International Organization for Standardization
Provided by IHS under license with ISO
No reproduction or networking permitted without license from IHS
Not for Resale

12.2.4 CallCharacteristics

The CallCharacteristics parameter type describes, when included on an event, the high level characteristics associated with a call.

When this parameter is included on a switching function service request, it indicates the requested set of high level characteristics that should be associated with the call.

Format

This parameter type is a bitmap. Multiple bits may be set. The complete set of possible values in the bitmap is:

- acdCall. This bit is set to indicate an ACD call. Once the call is no longer associated with the ACD, this bit is no longer set. See Functional Requirement #1.
- lowPriorityCall - This bit is set to indicate that the priority level associated with the call is low.
- priorityCall - This bit is set to indicate that the priority level assocaited with the call is normal.
- highPriorityCall - This bit is set to indicate that the priority level associated with the call is high.
- maintenanceCall - This bit is set to indicate a maintenance call.
- directAgent - This bit is set to indicate a call placed directly to a device such as an ACD device or station. This may be used to indicate that e.g. ACD agent states, forwarding settings, or do not disturb settings should be or have been overridden.
- assistCall - This bit is set to indicate a call whose purpose is to request assistance.
- voiceUnitCall - This bit is set to indicate a call involving a Voice Unit (e.g., voice mail system) or Interactive Voice Device. Once the Voice Unit or Interactive Voice Device is no longer involved with the call, this bit is no longer set.
- privateCall - This bit is set to indicate that the sensitivity of the call is private.
- personalCall - This bit is set to indicate that the sensitivity of the call is personal.
- sensitiveCall - This bit is set to indicate that the sensitivity of the call is normal.
- confidentialCall - This bit is set to indicate that the sensitivity of the call is confidential.
- encryptedCall - This bit indicates that the payload/media associated with the call is encrypted. It may also indicate that the signalling associated with the call is encrypted. The mechanism used for encryption (TLS, IPSEC, SRPT, etc.) is implementation specific.

Functional Requirements

1. There are many conditions when a switching function may classify a call as an ACD call and when an ACD call becomes a non-ACD call. The specific conditions are switching function dependent.
2. If multiple priority and/or security values are indicated, it is suggested (but not required) that the highest value should be used. The levels of sensitivity are (in increasing order): privateCall, personalCall, sensitiveCall, and confidentialCall. The levels of priority are (in increasing order): lowPriorityCall, priorityCall, and highPriorityCall.

12.2.5 CallLinkageData

The CallLinkageData parameter type contains globally unique information that is used to associate CSTA calls that are linked by a switching function because of the way that a call was created or manipulated.

For example, a call that is created as the result of the CSTA Consultation Call service (consulted call) may be linked to the call placed on hold at the consultation device by the CallLinkageData parameter type. The

© ISO/IEC 2007 – All rights reserved

Copyright International Organization for Standardization
Provided by IHS under license with ISO
No reproduction or networking permitted without license from IHS
Not for Resale

CallLinkageData parameter type can also be used to correlate calls in different switching sub-domains with the same “end-to-end” or “global” call.

See 6.1.2.7, “Call Linkage”, on page 47 for a description of the call linkage feature.

Format

This parameter type is comprised of a sequence of the following:

- globalCallData (M) Structure - this component contains information that pertains to an “end-to-end” or “global” call. It consists of the following:
  - globalCallSwitchingSubDomainName (C) Characters - specifies the name of the switching sub-domain that created the globalCallData. This component is required if the globalCallLinkageID component is not a globally unique value, otherwise it may be omitted. See Functional Requirement #2.
  - globalCallLinkageID (M) Choice - specifies the global call linkage identifier. This consists of one of the following choices:
    - subDomainCallLinkageID Characters - specifies the switching function specific call linkage identifier. The maximum length supported by the switching function is provided via the capabilities exchange services.
    - globallyUniqueCallLinkageID Characters - specifies the globally unique call linkage identifier. See functional requirement #2b.
  - callLinkageIDTimestamp (O) Timeinfo - specifies the time that the globalCallData was created. The format is described in 12.2.26.
- threadData (C) Structure - This information pertains to the entire call thread, i.e. all calls that are linked together as part of the same thread. This component shall only be provided if the switching function supports the thread linkage feature (as indicated by the capability exchange services). It consists of the following:
  - threadSwitchingSubDomainName (C) Characters - specifies the name of the switching sub-domain that created the threadData. This is required if the threadID is not a globally unique value, otherwise it may be omitted. See Functional Requirement #2.
  - threadLinkageID (M) Choice - specifies the thread linkage identifier. This consists of one of the following choices:
    - subDomainThreadID Characters - specifies the switching function specific thread linkage identifier. The maximum size supported by the switching function is provided via the capabilities exchange services.
    - globallyUniqueThreadID Characters - specifies the globally unique thread linkage identifier. See functional requirement #2b.
  - threadIDTimestamp (O) Timeinfo - specifies the time that the threadData was created. The format is described in 12.2.26.

Functional Requirements

1. The switching sub-domain names are used to distinguish one switching sub-domain from another. It is the responsibility of the switching function to provide a value that is unique within the switching domain.
2. The switching function that creates the callLinkageData ensures that it is globally unique by one of the following:

© ISO/IEC 2007 – All rights reserved

Copyright International Organization for Standardization
Provided by IHS under license with ISO
No reproduction or networking permitted without license from IHS
Not for Resale

a. providing the switching sub-domain name component along with a switching sub-domain unique identifier component. The combination of these two components provides call linkage data that is globally unique.

b. providing a globally unique call linkage identifier component. The switching function that provides this choice of linkage identifier must generate the globallyUniqueCallLinkageID and/or the globallyUniqueThreadID via the algorithm used to create the globally unique ID as specified in ITU-T Rec. H.225.

3. Whenever the globalCallData or the threadData is updated, the corresponding timestamp information shall also be updated.

4. When the switching function provides the globallyUniqueCallLinkageID choice, it shall ensure that:

   a. if the switching function also provides the globalCallSwitchingSubDomainName, there should be a 1/1 correspondence between the node name field in the globallyUniqueCallLinkageID and the globalCallSwitchingSubDomainName.

   b. if the switching function also provides the callLinkageIDTimestamp, the timestamp field in the globallyUniqueCallLinkageID should be consistent with the callLinkageIDTimestamp.

5. When the switching function provides the globallyUniqueThreadID choice, it shall ensure that:

   a. if the switching function also provides the threadSwitchingSubDomainName, there should be a 1/1 correspondence between the node name field in the globallyUniqueThreadID and the threadSwitchingSubDomainName.

   b. if the switching function also provides the threadIDTimestamp, the timestamp field in the globallyUniqueThreadID should be consistent with the threadIDTimestamp.

12.2.6 CallQualifyingData

The CallQualifyingData parameter type specifies information such as wrap codes, walk away codes, hold reasons, transfer reasons, etc. that describes or helps qualify how a call is being (or has been) handled by a user.

Format

This parameter type is a character string. The maximum size supported by the switching function is provided via the capabilities exchange services.

Functional Requirements

1. The computing function will be notified that the call qualifying data has been added or changed through the Call Information event. This event will be generated when the user enters the call qualifying data manually or after a service (Associate Data) has added or changed the data.

12.2.7 ChargingInfo

The ChargingInfo parameter type represents a cumulative value of charging or currency units charged to a device for a call in which the device was involved. This information can represent an intermediate (during the call) or final total (when the device leaves the call).

Format

This parameter consists of the following components:

- numberUnits (M) Choice Structure - This component consists of one of the following choices:

© ISO/IEC 2007 – All rights reserved

Copyright International Organization for Standardization
Provided by IHS under license with ISO
No reproduction or networking permitted without license from IHS
Not for Resale

- numberOfChargingUnits (List Structure) - indicates a cumulative number of charging units. This component consists of a sequence that may be repeated to report different types of charging units. The sequence consists of:
  - chargingUnits (M) Value - the number of charging units.
  - typeOfUnits (O) Character String - the type of units. This may be included to differentiate among these types. Its definition is network-dependent.
- numberOfCurrencyUnits (List Structure) - indicates a cumulative value of currency units. This sequence consists of:
  - currencyType (M) Character String - indicates the type of currency. A null string (size of 0) indicates the default currency. Its definition is network-dependent.
  - currencyAmount (M) Value - indicates the cumulative value of currency units.
  - currencyMultiplier (M) Enumerated - indicates the currency unit multiplier. The complete set of possible values is: .001, .01, .1, 1, 10, 100, 1000.

- typeOfChargingInformation (M) Enumerated - This can have one of the following values:
  - Sub-total - indicates that the information is an intermediate value.
  - Total - indicates that the charging information is complete.

12.2.8 ConnectionInformation

The ConnectionInformation parameter type specifies the connection information associated with the subject connection (i.e., the connection that is the focus of the event or positive acknowledgement being reported).

Format

This parameter type is a comprised of the following parameters:

1. flowDirection (O) Enumerated - Specifics the direction of flow that is associated with the subject connection. If this parameter is not present, the connection's flow direction is unknown. The complete set of possible values is:
   - Transmit - Media stream data is only capable of being transmitted on the connection by the associated device.
   - Receive - Media stream data is only capable of being received on the connection by the associated device.
   - Transmit and Receive - Media stream data is capable of being transmitted and received on the connection by the associated device.
   - None - Media stream data is not capable of being transmitted or received on the connection by the associated device.
2. numberOfChannels (O) Value - Specifies the number of media stream channels that are associated with the subject connection. If this parameter is not present, the number of channels associated with the connection is one.
3. mediaSessionInfo (O) Characters - Specifies the protocol specific information associated with the connection related to the media stream. This could be information derived from the Session Description Protocol (SDP), for example. The format, meaning and behaviour of the media session information is specific to the given switching function.

--`,,```,,,,````-`-`,,`,,`,`,,`---

© ISO/IEC 2007 – All rights reserved

Copyright International Organization for Standardization
Provided by IHS under license with ISO
No reproduction or networking permitted without license from IHS
Not for Resale

Functional Requirements

1. The initial connectionInformation associated with a connection that is being created can be specified on certain CSTA services.
2. The ParticipationType parameter in certain CSTA Services (Intrude Call, Join Call, Single Step Conference, etc.) can also be used to specify the flowDirection when a device is becoming part of a call.
3. After a connection is created, the Change Connection Information service can be used to modify the connectionInformation associated with a connection. This can be used to change a connection that was created with a “Receive” flowDirection (initially set up as for “silent monitoring”) to “Transmit and Receive” (active participation), for example.

12.2.9 ConnectionList

The ConnectionList parameter type provides the linkage mechanism between a device’s old connection ID and new connection ID resulting from the conference or transfer.

Format

This parameter includes the following components for every device or connection being reported:

- new ConnectionID (C) ConnectionID - The CallID portion of this ConnectionID refers to the resulting call. This component is optional for the transferringDevice in the Transferred event, otherwise it is mandatory.
- old ConnectionID (C) ConnectionID - The CallID portion of this ConnectionID refers to the original call. This component is mandatory if the switching function previously reported the CallID, otherwise it is optional.
- endPoint DeviceID (O) DeviceID - For internal calls, this is the representation of the device inside the switching sub-domain. For external calls (incoming or outgoing), this is the representation of the externally located device (if known by the switching function). This component is a character string. The maximum length supported by the switching function is provided via the capabilities exchange services. It may be:
  - of any device identifier format
  - of the following statuses: “Provided” “Not Known” “Restricted”
- associatedNID (C) DeviceID - For external calls (incoming and/or outgoing), this component specifies the Network Interface Device (e.g., trunk, CO line) within the switching sub-domain that is associated with the externally located device. In that case the component endPoint DeviceID (if provided) shall represent the externally located device. The associatedNID component is mandatory in case of external calls and shall be omitted when the device is located inside the switching sub-domain. This component may be:
  - of any device identifier format
  - of the following statuses: “Provided” or “Not Known”
- resultingConnectionInformation (O) ConnectionInformation - This component contains the flow direction and channel characteristics associated with the resulting connection.

Functional Requirements

1. This list should be used by the computing function to associate devices which remain in a call, as a result of a Conference or Transfer, with the connection IDs that are used to manipulate them.

12.2.10 CorrelatorData

The CorrelatorData parameter type contains computing sub-domain specific data that has been or will be attached to a call that the computing function is controlling or monitoring. This allows the computing function to

--`,,```,,,,````-`-`,,`,,`,`,,`---
© ISO/IEC 2007 – All rights reserved
Copyright International Organization for Standardization
Provided by IHS under license with ISO
No reproduction or networking permitted without license from IHS
Not for Resale

associate its own information with a call and, as a result, share it with other computing functions. For example, this information might be a key to a database entry, a computing function command sequence, file name, etc. This feature is useful when calls are moving from one computing function to another in a distributed computer network or from one switching sub-domain to another.

See 6.1.2.3, “Correlator Data”, on page 43 for specific rules on the use of Correlator Data.

Annex B defines one possible mechanism for delivering correlator data through an external ISDN network.

Format

This parameter type is a string. The maximum length supported by the switching function is provided via the capabilities exchange services.

Functional Requirements

1. The correlator data will stay with the call as long as the call exists. This means that the correlator data will be presented to the computing function on events that have this parameter and that the switching sub-domain supports.
2. The correlator data can be changed during the life of the call by any of the services that has the parameter or by using the Associate Data service.
3. The way to clear the data on the call is to pass a null string of data on one of the above mentioned services. (The actual parameter is passed but the content is a null string.) If correlator data is cleared, then the switching function notifies the computing function by sending a null string.
4. See 6.1.2.3, “Correlator Data”, on page 43 for a description of how Correlator Data is inherited by calls during a conference or transfer.
5. If the computing function issues the Consultation Call service without correlator data, initially the secondary call will not have correlator data associated with it, as it does not inherit any correlator data that may be associated with the primary call. If the computing function issues the Consultation Call service with correlator data, this data is for the secondary call only and does not affect any correlator data that may be currently associated with the primary call.
6. When correlator data is associated with a call, for all Call Control events listed in 17.2 on page 301 *except* for the Bridged, Call Cleared, Connection Cleared, Held, and the Retrieved events (i.e. call events that may indicate that a device becomes part of a call) shall include the correlator data (if supported). Correlator data can optionally be included with the four event exceptions listed above.
7. When this data is being attached to a call through a service request, its association shall be completed prior to any state transitions resulting from the request. Thus any state transition events which contain this parameter shall contain the information passed on the request.
8. If a computing function issues a Snapshot Call service after a service request has been issued with this information, but prior to the switching function making any state transitions, it is switching function specific as to what will be returned in the positive acknowledgement with regards to this parameter.

12.2.11 CSTAPrivateData

The PrivateData parameter type provides a mechanism for providing non-standard parameters in messages.

Format

This parameter type is a choice of one of the following:

- string of any length. The maximum length supported by the switching function is provided via the capabilities exchange services.

© ISO/IEC 2007 – All rights reserved

Copyright International Organization for Standardization
Provided by IHS under license with ISO
No reproduction or networking permitted without license from IHS
Not for Resale

- ASN.1 NULL type. If this choice is used, an implementation shall replace the ASN.1 NULL type with another valid ASN.1 type.

12.2.12 CSTASecurityData

The CSTASecurityData parameter type provides information that can be used to determine if a message in a sequence has been lost, the time that a message was sent, and security information that can be used to provide security such as access control and authentication.

Format

The CSTASecurityData parameter type consists of the following components:

- messageSequenceNumber (Value) Optional. Shall be a sequential number that can be used to detect missing messages in a sequence and verify that their order has not been altered.
- timestamp (Timeinfo) Optional. Shall be a generalized time value that can provide an indication of the “freshness” of a message. It can indicate that the received message is not a replay of another message from a previous association or from the current association after the sequence numbers have recycled.
- securityInfo (Choice Structure) Optional - Shall indicate the security data that may be used to make appropriate access control decisions or to carry out the current security policy. This contents of this information is not defined by this Standard. This component is a choice of one of the following:
    - string of any length. The maximum length supported by the switching function is provided via the capabilities exchange services.
    - ASN.1 NULL type. If this choice is used, an implementation shall replace the ASN.1 NULL type with another valid ASN.1 type.

12.2.13 DeviceHistory

The DeviceHistory parameter type specifies a list of deviceIDs that were previously associated with the call. A device becomes associated with the call whenever there is a CSTA connection created at the device for the call. The association may also result from a relationship between a device and a call outside the CSTA switching function. A device becomes part of the DeviceHistory list when it is no longer associated with the call (for example: when a call is redirected from a device, when a call is transferred away from a device, and when a device clears from a call).

Format

The parameter type consists of a list of entries. Each entry contains information regarding a deviceID that had previously been associated with the call. The list is ordered from the first device that left the call to the device that most recently left the call (see Functional Requirement #2). Each entry consists of:

- oldDeviceID (M) DeviceID - the device that left the call. This information should be consistent with the subject device in the event that represented the device leaving the call. For example: the divertingDevice provided in the Diverted event for that redirection, the transferring device in the Transferred event for a transfer, or the clearing device in the Connection Cleared event. This device identifier type may be one of the following:
    - of any device identifier format (see Clause 10, “CSTA Device Identifier Formats”, on page 97 for more information).
    - “Not Known” - indicates that the device identifier associated with this entry in the DeviceHistory list cannot be provided.
    - “Restricted” - indicates that the device associated with this entry in the DeviceHistory list cannot be provided due to regulatory and/or privacy reasons.

© ISO/IEC 2007 – All rights reserved
Copyright International Organization for Standardization
Provided by IHS under license with ISO
No reproduction or networking permitted without license from IHS
Not for Resale

- “Not Required” - indicates that there are no devices that have left the call. If this value is provided, it shall be provided as the only entry in the list and the eventCause and oldConnectionID shall not be provided with this list entry.
- “Not Specified” - indicates that the switching function cannot determine whether or not any devices have previously left the call. If this value is provided, it shall be provided as the only entry in the list and the eventCause and oldConnectionID shall not be provided with this list entry.

- eventCause (O) EventCause - the reason the device left the call or was redirected. This information should be consistent with the eventCause provided in the event that represented the device leaving the call (for example, the cause code provided in the Diverted, Transferred, or Connection Cleared event).
- oldConnectionID (O) ConnectionID - the CSTA connectionID that represents the last connectionID associated with the device that left the call. This information should be consistent with the subject connection in the event that represented the device leaving the call (for example, the connectionID provided in the Diverted, Transferred, or Connection Cleared event).

Functional Requirements

1. The last entry in the list represents the last device that left the call.
2. If a resulting call is being formed (due to a transfer or conference, for example) from one or more calls with different DeviceHistory parameters, the DeviceHistory for each of the old calls should be combined and associated with the resulting call. The ordering of the DeviceHistory for the "combined" call is switching function specific.
3. The switching function can indicate the maximum number of entries of the DeviceHistory parameter type in the response Get Switching Function Capability service. If the switching function supports this parameter and the length of the DeviceHistory is exceeded, it is switching function-dependent which entries are included in the parameter.
4. A device may be associated with a call outside the CSTA switching sub-domain. This may become known to the CSTA switching function through information provided by the external network (using protocol specific information elements). Such devices may be added to the DeviceHistory list if their association with the call is known to the switching function.

12.2.14 ErrorValue

The ErrorValue parameter type defines error codes.

Format

This parameter contains the following:

- *Error Category* - Operation, Security, State Incompatibility, System Resource Availability, Subscribed Resource Availability, Performance Management, Private Data, Private Error Code, and Unspecified.
- *Error Value* - A value describing the error. The following text describes the various categories and values within each category.

Note that the error code hierarchy described in Figure 9-1, “ErrorValue Hierarchy,” on page 93 is represented by indented bullet lists in the following sections, each indent representing an additional error code level.

12.2.14.1 Operation Errors

Error values in this category shall indicate an error in the Service Request. This category shall include one of the following specific error values:

- generic - The server has detected an operational error in the service request and the error is either not a specified Operation Class error or the switching function cannot be more specific.

© ISO/IEC 2007 – All rights reserved

Copyright International Organization for Standardization
Provided by IHS under license with ISO
No reproduction or networking permitted without license from IHS
Not for Resale

- atLeastOneConditionalParameterNotProvided - The service definition specifies a set of conditional parameters, at least one of which shall be provided. No parameter from this set was present.
- featureAlreadySet - The feature cannot be set because it is already set.
- invalidMessageIdentifier - There is no message with the specified Message Identifier.
- invalidParameterValue - A value for a parameter is invalid. A value is in the specified range but invalid in the circumstance where it is used.
    - invalidAccountCode - The account code parameter is invalid.
    - invalidAgentGroup - An agent group is invalid.
    - invalidAgentIdentifier - An agent identifier is invalid.
    - invalidAgentPassward - An agent password is invalid.
    - invalidAgentState - An agent state setting is invalid.
    - invalidAlertTime - The alertTime parameter is invalid.
    - invalidAllocationState - The service request (MakePredictiveCall) specified an allocation state that is invalid in the present circumstance.
    - invalidAuthorizationCode - The authorization code is invalid.
    - invalidAutoAnswer - The autoanswer parameter is invalid.
    - invalidBitRate - The bitRate parameter is invalid.
    - invalidButtonIdentifier - A button identifier is invalid.
    - invalidButtonLabel - A button label is invalid.
    - invalidCallType - The callType parameter is invalid.
    - invalidConnectionRate - The connectionRate parameter is invalid.
    - invalidConsultPurpose - The consultPurpose parameter is not valid.
    - invalidCorrelatorData - The Correlator Data parameter is not valid.
    - invalidCrossReferenceIdentifier - The service request specified a Cross Reference Identifier that is not in use.
    - invalidDelayTolerance - The delayTolerance parameter is invalid.
    - invalidDestination - The service request contains a destination that is invalid. Note that for a forwarding destination, the switching function returns the invalidForwardingDestination error. This occurs when the calledDirectoryNumber, newDestination, or routeSelected parameter is invalid.
    - invalidDestinationDetect - the destinationDetect parameter is invalid.
    - invalidDoNotDisturb - The do not disturb setting is invalid.
    - invalidEscapeCrossReferenceIdentifier - The escape registration request identifier is invalid.
    - invalidFeature - The service request specified a feature that is invalid. Often, this is because the switching or computing function does not support the requested feature.
    - invalidFile - The specified file is not accessible.
    - invalidFlowDirection - The flowDirection parameter is invalid.
    - invalidForwardingDestination - The forwarding destination device is not valid.
    - invalidForwardingFlag - The forwarding flag is invalid.
    - invalidForwardingType - The forwarding type is invalid.

--`,,```,,,,````-`-`,,`,,`,`,,`---

© ISO/IEC 2007 – All rights reserved

Copyright International Organization for Standardization
Provided by IHS under license with ISO
No reproduction or networking permitted without license from IHS

Not for Resale

- invalidHookswitchType - A hookswitch type is invalid.
- invalidHookswitchComponent - A hookswitch component is invalid.
- invalidLampIdentifier - A lamp identifier is invalid.
- invalidLampMode - A lamp mode is invalid.
- invalidMessageWaitingSetting - A message waiting setting is invalid. The switching function returns this error for the messageWaitingOn parameter.
- invalidMicrophoneGain - A microphone gain setting is invalid.
- invalidMicrophoneMute - A microphone mute setting is invalid.
- invalidMonitorCrossReferenceIdentifier - The service request specified a monitor cross reference identifier that is not in use.
- invalidMonitorFilter - The monitor filter is invalid.
- invalidMonitorObject - The monitor object is invalid.
- invalidMonitorType - The monitor type is invalid.
- invalidNumberOfChannels - The numberOfChannels parameter is invalid.
- invalidParticipationType - The participationType parameter is invalid.
- invalidRemainRetry - The value of the remainRetry parameter is invalid.
- invalidRingCount - The ring count setting is invalid.
- invalidRingPattern - A ring pattern setting is invalid.
- invalidRingVolume - A ring volume setting is invalid.
- invalidRouteingAlgorithm - The computing function does not support the routeing algorithm.
- invalidRouteingCrossReferenceIdentifier - The service request specified a routeing cross reference identifier that is not in use.
- invalidRouteRegistrationCrossReferenceIdentifier - The route registration request identifier is invalid.
- invalidSpeakerVolume - A speaker volume is invalid.
- invalidSpeakerMute - A speaker mute setting is invalid.
- invalidSwitchingSubdomainCharsType - The switchingSubDomainCCIEType parameter is invalid.

- invalidObjectType - A parameter in the service request contains an object type that is not the defined object type for that parameter.
  - invalidActiveCallObject - The value supplied for activeCall or one of its components is not of the proper type.
  - invalidCalledDeviceObjectType - The value supplied for calledDevice is not of the proper type.
  - invalidCallingDeviceObjectType - The value supplied for callingDevice is not of the proper type.
  - invalidCallToBePickedUpObjectType - The value supplied for callToBePickedUp or one of its components is not of the proper type.
  - invalidCallToDivertObjectType - The value supplied for callToBeDiverted is not of the proper type.
  - invalidCallToParkObjectType - The value supplied for callToPark or one of its components is not of the proper type.

© ISO/IEC 2007 – All rights reserved

Copyright International Organization for Standardization
Provided by IHS under license with ISO
No reproduction or networking permitted without license from IHS
Not for Resale

- invalidDestinationDeviceObject - The value supplied for newDestination in a or one of its components is not of the proper type.
- invalidHeldCallObject - The value supplied for heldCall or one of its components is not of the proper type.
- invalidMonitorObjectType - The monitorObject type is invalid.
- invalidParkToObjectType - The value supplied for r parkTo is not of the proper type.

- messageIdentifierRequired - The request requires a Message Identifier.
- notDifferentDevices - Multiple parameters in the service request that shall specify different devices do not specify different devices.
- notSameDevice - Multiple parameters in the service request that shall specify the same device do not specify the same device.
- objectNotKnown - An object parameter (connection, device, or call) has a value that is not known.
  - invalidCallIdentifier - A call identifier parameter or a call identifier component of a connection identifier parameter is invalid or is not known to the switching function.
    - invalidActiveCallIdentifier - The call identifier in the activeCall connection does not specify a valid call.
    - invalidHeldCallIdentifier - The call identifier in the heldCall connection does not specify a valid call.
  - invalidConnectionIdentifier - A connection identifier or some component of the connection identifier is invalid.
    - invalidActiveConnectionIdentifier - The activeCall connection does not specify a valid call.
    - invalidHeldConnectionIdentifier - The heldCall connection does not specify a valid call.
  - invalidDeviceIdentifier - A device identifier parameter or a device identifier component of a connection identifier parameter is invalid or is not known to the switching function.
    - invalidActiveDeviceIdentifier - The device identifier in the activeCall connection does not specify a valid device.
    - invalidCalledDeviceIdentifier - The called device parameter is invalid.
    - invalidCallingDeviceIdentifier - The calling device parameter is invalid.
    - invalidCallToParkDeviceIdentifier - The device identifier in the callToPark connection does not specify a valid device.
    - invalidDestinationDeviceIdentifier - The device identifier in the newDestination does not specify a valid device.
    - invalidDivertingDeviceIdentifier - The diverting device identifier is invalid.
    - invalidHeldDeviceIdentifier - The device identifier in the heldCall connection does not specify a valid device.
    - invalidParkToDeviceIdentifier - parkTo does not specify a valid device.
    - invalidPickUpDeviceIdentifier - The device identifier in the callToBePickedUp does not specify a valid device.
- parameterNotSupported - The switching function does not support a parameter.
  - accountCodeNotSupported - The accountCode parameter is not supported.

© ISO/IEC 2007 – All rights reserved

Copyright International Organization for Standardization
Provided by IHS under license with ISO
No reproduction or networking permitted without license from IHS
Not for Resale

- agentGroupNotSupported - The agent group parameter is not supported.
- agentPasswordNotSupported - The agent password parameter is not supported.
- agentStateNotSupported - The agent state is not supported.
- alertTimeNotSupported - The alertTime parameter is not supported.
- allocationNotSupported - The allocation parameter is not supported.
- authorisationCodeNotSupported - The authorization code is not supported.
- autoAnswerNotSupported - The autoAnswer parameter is not supported.
- bitRateNotSupported - The bitRate parameter is not supported.
- buttonNotSupported - The button parameter is not supported.
- callTypeNotSupported - The callType parameter is not supported.
- charactersToSendNotSupported - The charactersToSend parameter is not supported.
- connectionRateNotSupported - The connectionRate parameter is not supported.
- connectionReservationNotSupported. The connectionReservation parameter is not supported.
- consultPurposeNotSupported - The consultPurpose parameter is not supported.
- correlatorDataNotSupported - The correlator data parameter is not supported.
- delayToleranceNotSupported - The delayTolerance parameter is not supported.
- destinationDetectNotSupported - The destinationDetect parameter is not supported.
- digitModeNotSupported - The digitMode parameter is not supported.
- errorValueNotSupported - The errorValue parameter is not supported.
- flowDirectionNotSupported - The flowDirection parameter is not supported.
- forwardingDestinationNotSupported - The forwarding destination parameter is not supported.
- lampNotSupported - The lamp parameter is not supported.
- monitorTypeNotSupported - The monitor type is not supported.
- numberOfChannelsNotSupported - The numberOfChannels parameter is not supported.
- parameterTypeNotSupported - The participationType parameter is not supported.
- priorityNotSupported - The priority parameter is not supported.
- privateDataNotSupported - The privateData parameter is not supported.
- pulseDurationNotSupported - The pulseDuration parameter is not supported.
- pulseRateNotSupported - The pulseRate parameter is not supported.
- remainRetryNotSupported - The remainRetry parameter is not supported.
- ringCountNotSupported - The ringCount parameter is not supported.
- routeUsedNotSupported - The routeUsed parameter is not supported.
- securityNotSupported - The security parameter is not supported.
- switchingSubDomainCCIETypeNotSupported - The switchingSubDomainCCIEType parameter is not supported.
- toneDurationNotSupported - The toneDuration parameter is not supported.
- securityNotSupported - The security parameter is not supported.
- sysStatRegIDNotSupported - The sysStatRegID parameter is not supported.

© ISO/IEC 2007 – All rights reserved

Copyright International Organization for Standardization
Provided by IHS under license with ISO
No reproduction or networking permitted without license from IHS
Not for Resale

- userDataNotSupported - The userData parameter is not supported.

- privilegeViolationSpecifiedDevice - Performing the service request would result in a privilege violation.
  - privilegeViolationActiveDevice - The request would violate a switching function restriction on the device activeCall that limits the device in some way.
  - privilegeViolationCalledDevice - Performing the service request would violate a switching function restriction that limits the called device in some way.
  - privilegeViolationCallingDevice - Performing the service request would violate a switching function restriction that limits the calling device in some way.
  - privilegeViolationCallToParkDevice - The service request would violate a switching function restriction on the device in callToPark connection that limits the device in some way.
  - privilegeViolationDestinationDevice - The request would violate a switching function restriction on the device newDestination that limits the device in some way.
  - privilegeViolationOnDivertingDevice - The service request would violate a switching function restriction on the diverting device in some way.
  - privilegeViolationHeldDevice - The request would violate a switching function restriction on the device in heldCall that limits the device in some way.
  - privilegeViolationOnParkToDevice - The service request would violate a switching function restriction on the device parkTo that limits the device in some way.
  - privilegeViolationPickupDevice - The request would violate a switching function restriction on the device in callToBePickedUp that limits the device in some way.
- routeingTimerExpired - The routeing timer or delayed ringback timer expired for a routeing request.
- requestIncompatibleWithObject - The service request is not compatible with the corresponding object specified in the service request. This error shall not reflect state incompatibility errors of an object.
  - requestIncompatibleWithConnection - The service request is not compatible with a connection specified in the service definition.
    - requestIncompatibleWithActiveConnection - The request is incompatible with the activeCall connection.
    - requestIncompatibleWithHeldConnection - The request is incompatible with the heldCall connection.
  - requestIncompatibleWithDevice - The service request is not compatible with a device specified in the service request.
    - requestIncompatibleWithCalledDevice - The service request is not compatible with the called device.
    - requestIncompatibleWithCallingDevice - The service request is not compatible with the calling device.
    - requestIncompatibleWithSubjectDevice - The service request is not compatible with the subject device (not a called or calling device).
      - requestIncompatibleWithActiveDevice - The service request is incompatible with the device in the activeCall connection.
      - requestIncompatibleWithCallToParkDevice - The service request is not compatible with the device in callToPark connection.

--`,,```,,,,````-`-`,,`,,`,`,,`---

© ISO/IEC 2007 – All rights reserved

Copyright International Organization for Standardization
Provided by IHS under license with ISO
No reproduction or networking permitted without license from IHS

Not for Resale

- requestIncompatibleWithDestinationDevice - The service request is incompatible with the device in the newDestination connection.
- requestIncompatibleWithDivertingDevice - The service request is incompatible with the device in the callToBeDiverted connection.
- requestIncompatibleWithHeldDevice - The service request is incompatible with the device in the heldCall connection.
- requestIncompatibleWithMedia - The media type associated with the message is incompatible with the associated device.
- requestIncompatibleWithParkToDevice - The service request is not compatible with parkTo.
- requestIncompatibleWithPickupDevice - The service request is incompatible with the device in the callToBePickedUp connection.

- serviceNotSupported - The service is not supported.
- securityViolation - The service request violates security.
- valueOutOfRange - A parameter (other than a CSTA object) has a value that is not in the enumeration or range specified for that parameter.
  - agentStateOutOfRange - An agent state is not one of the defined values.
  - alertTimeOutOfRange - The alertTime parameter has a value that is out of its permitted range.
  - allocationOutOfRange - The allocation parameter has a value that is out of its permitted range.
  - autoAnswerOutOfRange - The autoAnswer parameter has a value that is out of range.
  - bitRateOutOfRange - The bitRate parameter value is out of the defined range.
  - callTypeOutOfRange - The callType parameter value is out of the defined range.
  - connectionRateOutOfRange - The connectionRate parameter value is out of the defined range.
  - connectionReservationOutOfRange - The connectionReservation parameter has a value that is out of range.
  - consultPurposeOutOfRange - The consultPurpose parameter has a value that is out of its permitted range.
  - correlatorDataOutOfRange - The length of the correlator data exceeds the maximum length that the switching function supports.
  - delayToleranceOutOfRange - The delayTolerance parameter is out of the defined range.
  - destinationDetectOutOfRange - The destinationDetect parameter has a value that is out of its permitted range.
  - digitModeOutOfRange - The digitMode parameter value is out of the defined range.
  - doNotDisturbOutOfRange- The do not disturb setting in the doNotDisturb parameter is out of range.
  - flowDirectionOutOfRange - The flowDirection parameter is out of the defined range.
  - forwardingFlagOutOfRange - The forwarding flag is out of range.
  - forwardingTypeOutOfRange - The forwardingType parameter is not one of the defined values.
  - hookswitchComponentOutOfRange - A hookswitch component is not one of the defined components.

© ISO/IEC 2007 – All rights reserved

Copyright International Organization for Standardization
Provided by IHS under license with ISO
No reproduction or networking permitted without license from IHS
Not for Resale

- hookSwithTypeOutOfRange - A hookswitch type is out of range.
- lampModeOutOfRange - A lamp mode setting is out of range.
- messageWaitingSettingOutOfRange - A message waiting setting is out of range. The switching function returns this error for the messageWaitingOn parameter.
- micGainOutOfRange - A microphone gain setting is out of range.
- micMuteOutOfRange - A microphone mute setting is out of range.
- monitorTypeOutOfRange - The monitor type is not a defined value.
- numberOfChannelsOutOfRange - The numberOfChannels parameter is out of the defined range.
- participationTypeOutOfRange - the participationType parameter has a value that is out of range.
- pulseDurationOutOfRange- The pulseDuration parameter value is out of range.
- pulseRateOutOfRange - The pulseRate parameter value is out of range.
- ringCountOutOfRange - The ring count is out of range.
- ringPatternOutOfRange - A ring patterns setting is out of range.
- ringVolumnOutOfRange - A ring volume is out of range.
- routingAlgorithmOutOfRange - The routeSelAlgorithm is not one of the defined values.
- speakerMuteOutOfRange - A speaker mute setting is out of range.
- speakerVolumeOutOfRange - A speaker volume is out of range.
- switchingCcittType - The switchingSubDomainCCIEType parameter is out of the defined range.
- systemStatusOutOfRange - The system status is not one of the defined values.
- toneCharacterOutOfRange - One of more characters in the charctersToSend parameter is not in the permitted set.
- toneDurationOutOfRange - The toneDuration parameter value is out of range.

12.2.14.2 Security Errors

Error values in this category shall indicate a security error. This category shall include one of the following specific error values:

- generic - This is a general purpose value that can be used when the server is unable to be any more specific about the cause of the error.
  - sequenceNumberViolated - Indicates that the server has detected an error in the operation's message sequence number.
  - timeStampViolated - Indicates that the server has detected an error in the operation's time stamp.
  - securityInfoViolated - Indicates that the server has detected an error in the operation's security data.

12.2.14.3 State Incompatibility Errors

Error values in this category shall indicate that the service request was not compatible with the condition of a related CSTA object. This category shall include one of the following specific error values:

© ISO/IEC 2007 – All rights reserved

Copyright International Organization for Standardization
Provided by IHS under license with ISO
No reproduction or networking permitted without license from IHS
Not for Resale

- generic - This is a general purpose value that can be used when the server is unable to be any more specific about the cause of the error.
    - invalidObjectState - An object (device, connection, call, message) is in an incorrect state for the service. This error value may be used when the server cannot be any more specific.
        - invalidDeviceState - A device object is in an incorrect state for the service request.
            - connectedCallExists - A physical element is already associated with another connection in the connected state.
            - invalidActiveDeviceState - The device in activeCall or callToBePickedUp connection is not in the correct state.
            - invalidCalledDeviceState - The device in the calledDevice connection is not in the correct state.
            - invalidCallingDeviceState - The device in the callingDevice connection is not in the correct state.
            - invalidCallToParkDeviceState - The device in the callToPark connection is not in the correct state.
            - invalidDestinationDeviceState - The newDestination device is not in the correct state.
            - invalidDivertingDeviceState - The diverting device is not in a correct state.
            - invalidHeldDeviceState - The device in heldCall connection is not in the correct state.
            - invalidParkToDeviceState - The parkTo device is not in the correct state.
        - invalidConnectionState - A connection object is in an incorrect state for the service request.
            - invalidActiveConnectionState - The activeCall connection is not in the correct state.
            - invalidConnectionIdentifierForActiveCall - A Connection Identifier specified as the activeCall in the service request is not in the correct state.
            - invalidHeldConnectionState - The heldCall connection is not in the correct state.
            - noActiveCall - The service request operates on an active call, but there was no active call.
            - noCallToAnswer - There is no call active for the connection identifier specified as the callToBeAnswered.
            - noCallToClear - There is no call associated with the connection identifier of the Clear Call request.
            - noCallToComplete - There is no call active for the connection Identifier specified as the callToBeCompleted.
            - noConnectionToClear - There is no connection for the connection identifier specified as the connectionToBeCleared.
            - noHeldCall - The service request operates on a held call, but the specified call was not in the Hold state.
        - incorrectMessageState - A message object is in an incorrect state for the service.
            - beginningOfMessage - The message pointer is at the beginning of the message.
            - endOfMessage - The message pointer is at the end of the message.

© ISO/IEC 2007 – All rights reserved

Copyright International Organization for Standardization
Provided by IHS under license with ISO
No reproduction or networking permitted without license from IHS
Not for Resale

- messageSuspended - The specified message is already suspended on the same Connection.
- notAbleToPlay - The specified message exists, but cannot be played.
- notAbleToResume - The specified message cannot be resumed.

12.2.14.4 System Resource Availability Errors

Error values in this category shall indicate that the service request could not be fulfilled because of a lack of system resources within the serving sub-domain. This category shall include one of the following specific error values:

- generic - This is a general purpose value that can be used when the server is unable to be any more specific about the cause of the error.
- resourceBusy - The service is supported by the server, but is unavailable due to a resource that is busy.
- internalResourceBusy - An internal resource is in use.
- classifierBusy - All available classifiers are in use.
- noMediaChannelsAvailable - There are no available media stream channels to complete the request.
- channelsInUseForBridgedDevices - All applicable media stream channels are in use by other devices associated in a bridged device configuration.
- channelsInUseForData - All applicable media stream channels are in use for digital data connections.
- toneDetectorBusy - All available tone detectors are in use.
- toneGeneratorBusy - All available tone generators are in use.
- networkBusy - The server sub-domain is busy.
- resourceOutOfService - The service is supported by the server, but is unavailable due to a resource that is out of service.
- deviceOutOfService - A device that is needed to carry out the service is out of service.
- activeDeviceOutOfService - The device specified in activeCall connection is out of service.
- calledDeviceOutOfService - The device specified in the calledDevice connection is out of service.
- callingDeviceOutOfService - The device specified in the callingDevice connection is out of service.
- callToParkDeviceOutOfService - The device specified in callToPark connection is out of service.
- destinationDeviceOutOfService - The newDestination device is out of service.
- divertingDeviceOutOfService - The device specified as the diverting device is out of service.
- heldDeviceOutOfService- The device specified in heldCall connection is out of service.
- parkToDeviceOutOfService - The device specified in parkTo is out of service.
- pickupDeviceOutOfService - The device in callToBePickedUp is out of service.

© ISO/IEC 2007 – All rights reserved
Copyright International Organization for Standardization
Provided by IHS under license with ISO
No reproduction or networking permitted without license from IHS
Not for Resale

- divertingDeviceOutOfService - The device specified as the diverting device is out of service.
- networkOutOfService - The server sub-domain is Out Of Service.
- otherResourceOutOfService - Some resource needed to carry out the service other than the above is out of service.

- resourceLimitExceeded - The service is supported by the server, but is unavailable because it would exceed the internal usage limit of the resource.
  - overallMonitorLimitExceeded - The service request would exceed a switching function limit on the number of monitors (either an overall limit on the aggregate number of monitors or a limit on the number of monitors of different types (device-type, call-type) or some combination of the two).
  - conferenceMemberLimitExceeded - The requested service would exceed the server's limit on the number of members of a conference.
  - registrationLimitExceeded - This service would exceed the switching function's maximum number of registrations.

12.2.14.5 Subscribed Resource Availability Errors

Error values in this category shall indicate that the service request could not be fulfilled because a required resource must be purchased or contracted by the client system. This category shall include one of the following specific error values:

- generic - This is a general purpose value to be used when the server is unable to be any more specific about the cause of the error.
  - objectMonitorLimitExceeded - The service request would exceed the server's limit of monitors for the specified object.
  - trunkLimitExceeded - The service request would exceed the server's limit of trunks.
  - outstandingRequestsLimitExceeded - The service request would exceed the servers's limit on the number of outstanding service requests.
  - objectRegistrationLimitExceeded - This service request would exceed the switching function's limit on the number of registrations for this device.

12.2.14.6 Performance Management Errors

Error values in this category shall indicate that an error has been returned as a performance management mechanism. This category shall include one of the following specific error values:

- generic - This is a general purpose value to be used when the server is unable to be any more specific about the cause of the error.
  - performanceLimitExceeded - A performance limit has been exceeded.

12.2.14.7 Private Data Information Errors

Error values in this category shall indicate an error in the CSTA Private Data Information. The reason(s) why the Private Data Information is incorrect is not relevant to this Standard. This category shall include the following specific error value:

- cSTAPrivateDataInfoError - An error occurred in the privateData parameter. The reason for this error is implementation specific.

© ISO/IEC 2007 – All rights reserved

Copyright International Organization for Standardization
Provided by IHS under license with ISO
No reproduction or networking permitted without license from IHS
Not for Resale

12.2.14.8 Private Error Code

Error values in this category shall indicate a vendor specific error. This category shall include a vendor specific character string indicating a vendor specific error.

12.2.14.9 Unspecified Errors

Error values in this category shall indicate that the error did not belong to any of the other error value categories. This category shall include the following error value:

- unspecifiedError - Some error other than those covered by the error categories has occurred or server cannot determine the category of the error.

12.2.15 EventCause

The EventCause parameter type provides additional information on why an event was generated.

Format

Event causes are defined within the context of an event. For a description of an event cause refer to the event cause description associated with a specific event.

This parameter type contains one of the following event causes:

- ACD Busy
- ACD Forward
- ACD Saturated
- Activation
- Active Participation
- Alert Time Expired
- Alternate
- Auto Work
- Babble
- Bad Attribute
- Bad Grammar
- Bad Voice
- Bad URI
- Blocked
- Busy
- Busy Overflow
- Calendar Overflow
- Call Back
- Call Cancelled
- Call Forward
- Call Forward - Busy
- Call Forward - Immediate

© ISO/IEC 2007 – All rights reserved

Copyright International Organization for Standardization
Provided by IHS under license with ISO
No reproduction or networking permitted without license from IHS
Not for Resale

- Call Forward - No Answer
- Call Not Answered
- Call Pickup
- Camp On
- Camp On Trunks
- Capacity Overflow
- Character Count Reached
- Conference
- Consultation
- Destination Detected
- Destination Not Obtainable
- Destination Out of Order
- Distributed
- Distribution Delay
- Do Not Disturb
- DTMF Digit Detected
- Duplicate DTMF
- Duration Exceeded
- Early Stop
- Empty Queue
- End of Message Detected
- Entering Distribution
- Forced Pause
- Forced Transition
- Incompatible Destination
- inter-digit Timeout
- Intrude
- Invalid Account Code
- Invalid Connection
- Invalid Connection State
- Invalid Number Format
- Join Call
- Key Operation
- Key Operation In Use
- Lockout
- Maintenance
- Make Call
- Make Predictive Call

© ISO/IEC 2007 – All rights reserved

Copyright International Organization for Standardization
Provided by IHS under license with ISO
No reproduction or networking permitted without license from IHS
Not for Resale

- Max Timeout
- Message Duration Exceeded
- Message Size Exceeded
- Multiple Alerting
- Multiple Queuing
- Network Congestion
- Network Dialling
- Network Not Obtainable
- Network Out of Order
- Network Signal
- New Call
- Next Message
- No Audio Saved
- No Available Agents
- No Queue
- Normal
- Normal Clearing
- No Rule
- No Speech Detected
- Not Available Bearer Service
- Not Supported Bearer Service
- Number Changed
- Number Unallocated
- Out Of Grammar
- Overflow
- Override
- Park
- Path Replacement
- Queue Cleared
- Queue Time Overflow
- Recall
- Recall - Busy
- Recall - Forwarded
- Recall - No Answer
- Recall - Resources Not Available
- Redirected
- Remains in Queue
- Reorder Tone

© ISO/IEC 2007 – All rights reserved

Copyright International Organization for Standardization
Provided by IHS under license with ISO
No reproduction or networking permitted without license from IHS
Not for Resale

- Reserved
- Resources Not Available
- Selected Trunk Busy
- Silent Participation
- Single Step Conference
- Single Step Transfer
- Speech Detected
- Suspend
- Switching Function Terminated
- Termination Character Received
- Timeout
- Transfer
- Trunks Busy
- Unauthorized Bearer Service
- Unknown Overflow

Functional Requirements

1. Event causes are only present in events that result from the feature/situation associated with the meaning of the cause. Once that feature or situation ceases to be active, then the event cause is no longer present in the events.

12.2.16 LanguagePreferences

The LanguagePreferences parameter type describes one or more preferred languages associated with the call.

Format

The parameter type is a character string. The string consists of one or more language tags that indicate the preferred languages associated with the call. The syntax of the language tag is specified in IETF RFC 3066. Each language tag is space separated.

Examples:

- “en” indicates that English is the preferred language.
- “en de nl” indicates that the preference for the following languages, in priority order: English, German, and Dutch.

Functional Requirements

1. The language preference may become associated with a call in a number of ways. For example:
    - it can be provided via the underlying call control protocol signalling.
    - it can be specified on the CSTA service that creates a call (e.g. Make Call service).
    - it can be associated with a call when a CSTA feature is applied to a call (e.g. Single Step Transfer Call).
    - it can be associated with an existing call via the Associate Data service.

© ISO/IEC 2007 – All rights reserved

Copyright International Organization for Standardization
Provided by IHS under license with ISO
No reproduction or networking permitted without license from IHS
Not for Resale

2. The language preference can be changed (or cleared by providing a null string) during the life of the call by any of the services that includes the parameter including the Associate Data service. The language preference can also be changed by the underlying call control protocol specific signaling.
3. If a resulting call is being formed (due to a transfer or conference, for example) from one or more calls with different language preferences, the language preferences for each of the old calls shall be combined and associated with the resulting call. The ordering of the language tags for the "combined" call is switching function specific.

12.2.17 LocalConnectionState

The LocalConnectionState parameter type describes the connection state of the device associated with the Monitor Cross Reference ID.

This parameter type is only applicable for events generated by device-type monitors.

Format

This parameter type shall contain one of the following connection states:

- Alerting
- Connected
- Fail
- Hold
- Initiated
- Null
- Queued

Refer to 6.1.3, “Connection”, for detailed descriptions of the connection states.

Example

The following is a scenario that illustrates the usage of this parameter.

Consider the case of a two device call where device one has called device two, and device two is ringing. If both devices are monitored, then the switching function generates two separate (Delivered) events to indicate that the call has been delivered. While the subject device is identical for both Delivered events, the localConnectionInfo parameters are different.

- Both events contain the same subject device, device two in this case, since that is the device in the call being alerted.
- The connection state for device one is connected (most likely listening to ringback). This is reported in the localConnectionInfo parameter of the Delivered event for device one.
- The connection state for device two is alerting. This is reported in the localConnectionInfo parameter of the Delivered event for device two.

12.2.18 MediaCallCharacteristics

The MediaCallCharacteristics parameter type specifies the media (voice, digital data, etc.) characteristics of the call.

© ISO/IEC 2007 – All rights reserved

Copyright International Organization for Standardization
Provided by IHS under license with ISO
No reproduction or networking permitted without license from IHS
Not for Resale

Format

This parameter type is comprised of the following:

1. mediaClass (M) Bitmap - Specifies the media class (voice, digital data, etc.).

   A CSTA call shall belong to at least one and may belong to more than one of the following classes:

   - **Audio** - 3.1 KHz audio. Calls in this class involve devices that are used to make audio calls excluding speech calls. This includes calls involving devices such as G3 FAX and facsimile machines.
   - **Chat** - A type of Data class call that involves text-based messages that are exchanged between devices in the call using electronic media. A chat call is interactive since devices in the call can participate at the same time (i.e. originate and receive messages during the call.) The Data class bit must also be set for a Chat call.
   - **Data** - This class of calls involve digital data calls (both circuit switched and packet switched). Calls in this class include devices such as digital computer interfaces and G4 facsimile machines.
   - **Email** - This class of calls involve a text-based message that is sent using electronic media. This is a non-interactive call (i.e. only one device involved with the call at one time). This is a specific type of mediaClass associated with electronic mail systems.
   - **Image** - Digital data calls involving imaging, or high-speed, circuit-switched data in general. This includes calls involving devices such as digital video telephones and CODECs.
   - **IM** (Instant Message) - This class of calls involve a text-based message that is sent using electronic media. This is a non-interactive call (i.e. only one device is involved with the call at one time). The message contents associated with these calls can usually be displayed on the called devices. This is a specific type of Message media class associate with Instant Messaging systems.
   - **Message** - This class of calls involve a text-based message that is sent using electronic media. This is a non-interactive call (i.e. only one device is involved with the call at one time). The message contents associated with these calls can usually be displayed on the called devices. Instant Messages (IM), Short Message Service (SMS) are examples of this mediaClass.
   - **MMS** (Multi-media Message Service) - This class of calls involve a text-based message that is sent using electronic media. This is a non-interactive call (i.e. only one device is involved with the call at one time). The message contents associated with these calls can usually be displayed on the called devices. This is a specific type of Message media class associated with Multi-Media Message Service systems.
   - **SMS** (Short Message Service) - This class of calls involve a text-based message that is sent using electronic media. This is a non-interactive call (i.e. only one device is involved with the call at one time). The message contents associated with these calls can usually be displayed on the called devices. This is a specific type of Message media class associate with Short Message Service systems.
   - **Voice** - Speech calls. This class of calls involves devices such as standard telephones.
   - **Not Known** - The media class is not known.
   - **Other** - A class of call not belonging to one of the specified mediaClass.

2. connectionRate (O) Value - The digital data connection rate of the call. The contents of this parameter is switching function specific (the capability exchange services may be used to obtain the list of possible values that are supported by the switching function). A value of zero (0) indicates that the type of media stream associated with the connection is digital data but the connection rate is unknown.

3. bitRate (O) Enumerated - The digital data bit rate of the call. If this parameter is not present, the bit rate of the call is a constant bit. The following is the complete set of possible values:

© ISO/IEC 2007 – All rights reserved

Copyright International Organization for Standardization
Provided by IHS under license with ISO
No reproduction or networking permitted without license from IHS
Not for Resale

- Constant (Default) - A bit rate which ensures a dedicated bandwidth and a constant rate of media stream delivery.
- Variable - A bit rate which may variable during the life of the call.

4. delayTolerance (O) Value - The digital data delay tolerance of the call. This parameter specifies the maximum amount of media stream delivery delay that will be toleranced for the call. If the bit rate is constant, then this value will indicate the actual amount of media stream delivery delay for the life of the call. Where as if the bit rate is variable, it will be the maximum delay allowed during the life of the call. The contents of this parameter is switching function specific, use the capability exchange services to obtain the list of possible values that are supported by the switching function. If this parameter is not present, the delay tolerance of the call is not known.
5. switchingSubDomainCCIEType (O) Enumerated - The type of switching sub-domain private call control information elements that are present in the switchingSubDomainInformationElements parameter. If this parameter is not present, there are no information elements associated with the call and the switchingSubDomainInformationElements parameter should be ignored. The following is the complete set of possible values:
   - ISDN
   - ATM (B-ISDN)
   - ISO-Ethernet (TDM part only)
   - RSVP
   - SIP
   - Other (switching sub-domain specific)
6. switchingSubDomainInformationElements (C) Characters - These parameters contain the private information elements that are available from the switching sub-domain (as specified by switchingSubDomainCCIEType) which represents a specific set of information elements. The format, meaning and behaviour of these information elements are specific to the given switching function. This parameter is only present and mandatory when the switchingSubDomainCCIEType parameter is present.

12.2.19 MediaServiceType

The mediaServiceType parameter type is used to indicate which media service is to be (or has been) attached to or detached from a particular call or connection that the computing function is controlling and/or monitoring.

Format

This parameter type shall contain one of the following values:

- cstaVoiceUnit
- dataModem
- digitalDataIsochronousIeee1394
- digitalDataIsochronousGeoport
- digitalDataIsochronousIeeeAtm
- digitalDataIsochronousIeeeIsdn
- digitalDataAPI
- ectfS100MediaServicesDefault
- ectfS100MediaServicesASI
- ivrScript1

© ISO/IEC 2007 – All rights reserved

Copyright International Organization for Standardization
Provided by IHS under license with ISO
No reproduction or networking permitted without license from IHS
Not for Resale

- ivrScript2
- ivrScript3
- ivrScript4
- ivrScript5
- ivrScript6
- ivrScript7
- ivrScript8
- ivrScript9
- ivrScript10
- liveSoundCaptureAnalog
- liveSoundTransmitAnalog
- liveSoundCaptureIeee1394
- liveSoundTransmitIeee1394
- liveSoundCaptureTransmitGeoport
- liveSoundCaptureTransmitAtm
- liveSoundCaptureTransmitISDN
- soundCaptureTransmitADPCM
- soundCaptureTransmitApi
- usb
- sfSpecific1
- sfSpecific2
- sfSpecific3
- sfSpecific4
- sfSpecific5
- sfSpecific6
- sfSpecific7
- sfSpecific8
- sfSpecific9
- sfSpecific10

Refer to Table D-16-10 on page 76 for a description of these service types.

12.2.20 MessageInfo

The MessageInfo parameter type specifies the message information associated with a call. The message information could consist of text to be displayed on a device (for an Instant Message) or the body and attachement parts associated with Email.

Format

The parameter type consists of a sequence of parts. Each part consists of the following:

© ISO/IEC 2007 – All rights reserved

Copyright International Organization for Standardization
Provided by IHS under license with ISO
No reproduction or networking permitted without license from IHS
Not for Resale

- contentTypeAndSubtype (O) Characters. A character string indicating the IANA assigned media content type and subtype. If this component is omitted the default is “text/plain”.
- contents (M) Characters. A sequence of characters representing the contents of the message part. A null-formatted contents parameter (the parameter is provided but is is empty) in a CSTA event indicates that there is contents associated with this part but the contents is not being provided in this message. The CSTA Snapshot Call service can be used to obtain the specific message contents when it is needed.
- contentsLength (O) Value. The length of the contents associated with this part (number of bytes).

12.2.21 MonitorFilter

The MonitorFilter parameter type specifies the list of events that are filtered (not sent) for a specific monitor.

Format

The parameter type consists of a list of bitmaps, each entry corresponding to a category of events, each bit in each category corresponding to a CSTA event. If the bit is TRUE, then the event corresponding to the bit is filtered (not sent) for the monitor. The list of bitmaps include:

- call control events - bitmap of the call control events as specified in Table D-117-143 on page 301.
- call associated events - bitmap of the call associated events as specified in Table D-118-26 on page 379.
- media attachment events - bit map of the media attachment events as specified in Table D-119-14 on page 395.
- physical device events - bitmap of the physical device events as specified in Table D-121-59 on page 451.
- logical device events - bitmap of the logical device events as specified in Table D-122-56 on page 494.
- maintenance events - bit map of the maintenance events as specified in Table D-123-1 on page 507.
- voice events - bit map of the voice events as specified in Table D-126-58 on page 572.
- vendor specific (private) events - bit map of the vendor specific events as specified in Table D-128-12 on page 605.

12.2.22 ServicesPermitted

The ServicesPermitted parameter type specifies the set of services that the switching function permits to be applied to a connection.

The servicesPermitted parameter (when provided in a call event) is similar to the localConnectionInfo parameter in that it applies to the services permitted for the connection at the monitored device.

This parameter type is only applicable for events generated by device-type monitors.

Format

This parameter type is a list of bitmaps where each bit represents a service that can be applied to a connection. When a bit is set, the corresponding service is permitted. The following is the list of bitmaps (multiple bits may be set in this parameter):

- call control services - the call control services as specified in Table D-117-1 on page 215.
- call associated services - the call associated services as specified in Table D-118-1 on page 366.
- media attachment services - the media attachment services as specified in Table D-119-1 on page 389.
- routeing services - the routeing services as specified in Table D-120-7 on page 403.
- voice services - the voice services as specified in Table D-126-1 on page 541.

© ISO/IEC 2007 – All rights reserved

Copyright International Organization for Standardization
Provided by IHS under license with ISO
No reproduction or networking permitted without license from IHS
Not for Resale

Functional Requirements

1. This parameter indicates which of a subset of CSTA services are permitted.
2. When the servicesPermitted parameter is provided in an event, it applies to the connection at the monitored device. This may or may not be the same as the subject device.
3. If there are multiple connections at a device, the information reported in the servicesPermitted parameter may not accurately reflect all possible service restrictions and interactions between multiple connections at a device.
4. There may be situations in a switching function that cause a service to fail after being presented as permitted in the servicesPermitted parameter. This may be due to dynamic system and/or resource conditions that may cause service availability restrictions. The switching function shall provide the appropriate error code in the negative acknowledgement to the failed service request.

12.2.23 SimpleCallState

The SimpleCallState parameter type indicates the main call states in simplified encoding. The semantics are identical to the sequence of connection states but they are represented by an item from the list below.

Format

This parameter type may contain one of the following:

- callNull
- callPending
- callOriginated
- callDelivered
- callDeliveredHeld
- callReceived
- callEstablished
- callEstablishedHeld
- callReceivedOnHold
- callEstablishedOnHold
- callQueued
- callQueuedHeld
- callFailed
- callFailedHeld
- callBlocked

12.2.24 SubjectOfCall

The SubjectOfCall parameter type indicates the subject or intent of the call.

For example, this could represent the contents of an Email subject line (for an Email call) or could represent the reason for a voice call, for example.

© ISO/IEC 2007 – All rights reserved

Copyright International Organization for Standardization
Provided by IHS under license with ISO
No reproduction or networking permitted without license from IHS
Not for Resale

Format

This parameter type is a character string. The maximum length supported by the switching function is provided by the capability exchange services.

12.2.25 SystemStatus

The SystemStatus parameter type indicates the reason for the System Status service request.

Format

The complete set of possible values are:

- *Disabled* - Existing Monitor Requests have been disabled. Other requests and acknowledgements also may be disabled, but negative acknowledgements should always be provided.
- *Partially Disabled* - Some of the objects in the system can not be reached. Existing monitors on these objects will not provide events and computer requests targeting these objects will be rejected. This cause indicates to the receiving function that a degradation of service level may occur but not complete system disability. Automatic or manual actions may be taken to remedy the parts disabled.
- *Enabled* - Requests and acknowledgements have been enabled. This usually occurs after a disruption or restart. This status cause is always sent after an Initializing cause has been sent and may be sent under other conditions. This status indicates that there are no outstanding monitors (existing monitors and their associated monitor cross reference identifiers are no longer valid).
- *Initializing* - The system is initializing or restarting. This status indicates that a system is temporarily unable to respond to any requests. If provided, this status message is followed by an Enabled status message to indicate that the initialization process has completed.
- *Messages Lost* - Requests and/or acknowledgements, including event reports, may have been lost.
- *Normal* - May be sent at any time and indicates that the status is normal. This status has no effect on other Services.
- *Overload Imminent* - The receiver is requested to take initiative to shed load.
- *Overload Reached* - The requester may take initiative to shed load. This cause may be followed by Stop Monitor requests sent to the client and by rejections to additional service requests.
- *Overload Relieved* - The overload condition has passed.

12.2.26 TimeInfo

The TimeInfo parameter type provides the calendar date and the time of day. There are three possible value representations: as local time, coordinated universal time, or as local time with a time differential factor. All representations use a four character representation of the year.

Format

This parameter type is based upon the GeneralizedTime as defined in ISO/IEC 8824.

12.2.27 UserData

The UserData parameter type contains computing sub-domain to computing sub-domain data. Note that the capabilities exchange services return the maximum length of the user data for a switching function.

User Data is described further in 6.1.2.4, “User Data”, on page 44. Also, refer to 12.2.10, “CorrelatorData”, on page 112.

© ISO/IEC 2007 – All rights reserved

Copyright International Organization for Standardization
Provided by IHS under license with ISO
No reproduction or networking permitted without license from IHS
Not for Resale

Annex B defines one possible mechanism for delivering user data through an external ISDN network.

Format

This parameter type is a sequence of characters. The maximum length supported by the switching function is provided via the capabilities exchange services.

Functional Requirements

1. The ability to send User Data, the timing of when user data can be sent, and the size of user data, is dependent upon the switching function's capabilities and the underlying network (such as ISDN).
2. Unlike correlator data, User Data is not attached to a call for the life of the call. User Data that has been associated with a primary or secondary call does not get retained with a resulting conference or transferred call.
3. The switching function reflects the delivery of User Data in the call control events that result from the switching function or network carrying out the call control activity with which the User Data was associated. When the switching function receives user data independent of call activity (i.e., Send User Information service), the User Data is provided in the Call Information event.
4. User data addresses a specific user in a call (e.g. the initially called device). The delivery and propagation of the user data to other devices inside the switching sub-domain in regards to features that apply to the call (e.g. forwarding, do not disturb) is switching function dependent.
5. When this data is being attached to a call through a service request, its association shall be completed prior to any state transitions resulting from the request. Thus any state transition events which contain this parameter shall contain the information passed on the request.
6. If a computing function issues a Snapshot Call service after a service request has been issued with this information, but prior to the switching function making any state transitions, it is switching function specific as to what will be returned in the positive acknowledgement with regards to this parameter.

12.3 Identifier Parameter Types

Identifier parameter types specific to these specifications are summarized in the following table.

Table 12-2 Identifier Parameter Types Summary

Defined Parameter Type	Description	Pg.
12.3.1 AgentID	Identifies an ACD agent.	138
12.3.2 AssociatedCalledDeviceID	Describes the switching function's internal representation of the originally called device in a call.	138
12.3.3 AssociatedCallingDeviceID	Describes the switching function's internal representation of the calling device in the call when the calling device is outside the switching sub-domain (i.e., trunk number).	139
12.3.4 AuditoryApparatusID	Indicates the auditory apparatus containing the speaker whose volume has changed.	139
12.3.5 ButtonID	Specifies the button identifier on a device.	140
12.3.6 CalledDeviceID	Specifies the device to be called via a service. This parameter describes the originally called device associated with a call.	140
12.3.7 CallingDeviceID	Describes the calling device associated with the call.	140
12.3.8 CDRCrossRefID	Specifies the CDR services cross reference identifier.	141
12.3.9 ConnectionID	Describes a device's connection in a given call.	141
12.3.10 DCollCrossRefID	Used to identify a specific data collection.	143
12.3.11 DeviceID	Identifies or represents a device in the switching function.	143

© ISO/IEC 2007 – All rights reserved

Copyright International Organization for Standardization
Provided by IHS under license with ISO
No reproduction or networking permitted without license from IHS
Not for Resale

Table 12-2 Identifier Parameter Types Summary (continued)

Defined Parameter Type	Description	Pg.
12.3.12 DisplayID	Specifies the display identifier on a device.	143
12.3.13 EscapeRegisterID	Used to identify an escape services registration.	143
12.3.14 HookswitchID	Used to specify the hookswitch to query at a specified device.	144
12.3.15 IOCrossRefID	Specifies the I/O services cross reference identifier.	144
12.3.16 IORegisterReqID	Used to identify an I/O services registration.	144
12.3.17 LampID	Specifies the lamp identifier.	144
12.3.18 MediaServiceInstanceID	Identifies a particular media access service instance (e.g., specific media access server or subsystem)	145
12.3.19 MediaStreamID	Specifies a media stream identifier that can be used to access an attached media service.	145
12.3.20 MessageID	Specifies a particular Voice Unit message.	145
12.3.21 MonitorCrossRefID	Specifies an identifier that is used to correlate an event to an established monitor.	145
12.3.22 NetworkCalledDeviceID	Specifies the called device information provided by the network for external incoming calls.	145
12.3.23 NetworkCallingDeviceID	Specifies the calling device information provided by the network for external incoming calls.	146
12.3.24 RedirectionDeviceID	Describes the last device known by the switching function from which the current call was routed.	146
12.3.25 ResourceID	Specifies a particular voice resource.	147
12.3.26 RingerID	Specifies the ringer identifier associated with a physical device	147
12.3.27 RouteingCrossRefID	References the routeing dialogues initiated by the switching function within a routeing registration.	147
12.3.28 RouteRegisterReqID	Identifies a routeing registration for which the computing function (acting as a routeing server) will receive routeing requests.	148
12.3.29 ServiceCrossRefID	Specifies an identifier that is used to correlate one service request to another service request.	148
12.3.30 SubjectDeviceID	Describes the device where a telephony event occurred or was invoked.	148
12.3.31 SysStatRegisterID	Used to identify system status registration.	149

12.3.1 AgentID

The AgentID parameter type identifies an ACD agent.

Format

This parameter type is a character string. The maximum length supported by the switching function is provided via the capabilities exchange services.

12.3.2 AssociatedCalledDeviceID

For outgoing external calls, the AssociatedCalledDeviceID parameter type specifies the Network Interface Device (e.g., trunk, CO Line) within the switching sub-domain that is associated with the called device. This parameter in mandatory on all events dealing with external outgoing calls.

For incoming external calls, this parameter specifies a device within the switching sub-domain that is associated with the originally called device (such as a switching function internal representation of DNIS, for example). This parameter is optional on all events dealing with incoming external calls.

© ISO/IEC 2007 – All rights reserved

Copyright International Organization for Standardization
Provided by IHS under license with ISO
No reproduction or networking permitted without license from IHS
Not for Resale

Format and Status

This device identifier type may be one of the following (see Clause 10, “CSTA Device Identifier Formats”, on page 97 for more information):

- a character string when using the Diallable Digits and the Switching Function Representation formats.
- an integer value when using the Device Number format.
- a value of “Not Known”.

Functional Requirements

1. A device identifier of this type will only be present when the switching sub-domain is using a network interface device for an external call; that is, the call is an External Outgoing or External Incoming call.
2. A device identifier of this type is not used to provide DNIS (Dialed Number Identification Service) or DID (Direct Inward Dialing) digit information or a string of digits that represents the called device. (This information is provided in the corresponding CalledDeviceID parameter.)
3. A device identifier of this type is set to “Not Known” when the switching function does not know the Network Interface Device associated with the called device.
4. A device identifier of this type will never contain the value “Not Required” or “Not Specified”.

12.3.3 AssociatedCallingDeviceID

The AssociatedCallingDeviceID parameter type specifies the Network Interface Device (e.g., trunk, CO line) within the switching sub-domain that is associated with the calling device in the call if the call is an external incoming call. This parameter shall be included on all external incoming calls.

Format and Status

This device identifier type may be one of the following (see Clause 10, “CSTA Device Identifier Formats”, on page 97 for more information):

- a character string when using the Diallable Digits and the Switching Function Representation formats.
- an integer value when using the Device Number format.
- a value of “Not Known”.

Functional Requirements

1. A device identifier of this type will only be present when the switching function is using a network interface device for an inbound call; that is, the call is an external incoming call.
2. A device identifier of this type is not used to provide ANI (Automatic Number Identification), CLID (CallerID) or SID (Station Identification) digit information or a string of digits that represents the calling device. (This information is provided in the corresponding CallingDeviceID parameter.)
3. A device identifier of this type will never contain the value “Not Required” or “Not Specified”.
4. If a call is created that contains multiple AssociatedCallingDeviceIDs (i.e., a conference call calling back to a device), the AssociatedCallingDeviceID status shall be “Not Known”.

12.3.4 AuditoryApparatusID

The AuditoryApparatusID parameter type specifies a particular auditory apparatus associated with the device.

© ISO/IEC 2007 – All rights reserved

Copyright International Organization for Standardization
Provided by IHS under license with ISO
No reproduction or networking permitted without license from IHS
Not for Resale

Format

This parameter type is a sequence of characters.

12.3.5 ButtonID

The ButtonID parameter type specifies the button identifier on a device.

Format

This parameter type is a sequence of characters.

Table 12-3 Reserved Button ID Assignments

Button ID	Button Label
0-9	Keypad Digits: “0” through “9”
10	Keypad Symbol: “*”
11	Keypad Symbol: “#”

12.3.6 CalledDeviceID

A device identifier of the CalledDeviceID type describes the originally called device associated with a call.

Format and Status

This device identifier type may be one of the following (see Clause 10, “CSTA Device Identifier Formats”, on page 97 for more information):

- a character string when using the Diallable Digits and the Switching Function Representation formats.
- an integer value when using the Device Number format.
- a value of “Not Known”.

Functional Requirements

1. A device identifier of this type contains the originally called device in the call. For External Incoming calls, a device identifier of this type will contain DNIS (Dialed Number Identification Service) or DID (Direct Inward Dialing).
2. This parameter will never contain the value “Not Required” or “Not Specified”.
3. When two calls are being joined through a conference or transfer, the CalledDeviceID information for the resulting call shall be taken from the secondary call.
4. This parameter type is different from the NetworkCalledDeviceID parameter type in that the CalledDeviceID information may change if the call is transferred and/or conferenced whereby the NetworkCalledDeviceID information does not change as long as the NID associated with the original calling device remains in the call. Also, the NetworkCalledDeviceID is limited to information passed over a Network Interface Device.

12.3.7 CallingDeviceID

The CallingDeviceID parameter type specifies the calling device associated with the call.

© ISO/IEC 2007 – All rights reserved

Copyright International Organization for Standardization
Provided by IHS under license with ISO
No reproduction or networking permitted without license from IHS
Not for Resale

Format and Status

This device identifier type may be one of the following (see Clause 10, “CSTA Device Identifier Formats”, on page 97 for more information):

- a character string when using the Diallable Digits and the Switching Function Representation formats.
- an integer value when using the Device Number format.
- a value of “Not Known”.
- a value of “Restricted” - provided when the callingDeviceID cannot be provided due to regulatory and/or privacy reasons.

Functional Requirements

1. A device identifier of this type contains the calling device in the call. For External Incoming calls, a device identifier of this type will contain ANI (Automatic Number Identification), CLID (CallerID) or SID (Station Identification) digit information or a string of digits that represents the calling device.
2. This parameter will never contain the value “Not Required” or “Not Specified”.
3. If more than one device is the calling device in a call (i.e., a conference call calling back to a device), the CallingDeviceID status will be “Not Known”.
4. This parameter type is different from the NetworkCallingDeviceID parameter type in that the CallingDeviceID information may change if the call is transferred and/or conferenced whereby the NetworkCallingDeviceID information does not change as long as the NID associated with the original calling device remains in the call. Also, the NetworkCallingDeviceID is limited to information passed over a Network Interface Device.

12.3.8 CDRCrossRefID

The CDRCrossRefID is used to correlate subsequent CDR services to the Start Call Detail Records Transmission service.

Format

This parameter type is a sequence of characters.

12.3.9 ConnectionID

The ConnectionID parameter type describes a device’s connection in a given call. (Connection Identifiers are also discussed in 6.1.3, “Connection”, on page 49.)

Format

The ConnectionID is always comprised of the following parameters (except in special cases which are described below):

1. callID (M) Character String - An identifier used by the switching function to represent a valid call. The maximum length supported by the switching function is provided via the capabilities exchange services. These IDs are created by the switching function and are globally unique among all calls within the switching sub-domain.
2. deviceID (M) DeviceID - An identifier which is used to represent a device in the switching sub-domain. This identifier can be either one of the two following values:
   - *Static* - This type of identifier is defined in 6.1.1, “Device”, on page 9.

© ISO/IEC 2007 – All rights reserved

Copyright International Organization for Standardization
Provided by IHS under license with ISO
No reproduction or networking permitted without license from IHS
Not for Resale

- *Dynamic* - This type of identifier is one that is created by the switching function for a device when it enters into a call and shall remain constant for the life of the device's participation in the call (i.e., the creation of a connection identifier for the device). As soon as the device leaves the call, the identifier becomes invalid. The use of a dynamic identifier by a switching function is determined when the switching function does not have a static identifier for the device or the identifier can not uniquely identify the device in a call. This type of identifier is sequence of characters. It is never a dialable number and can never be used outside the context of the connection identifier. This type of identifier is not directly related to a device element but is strictly used to make the connection identifier unique. Refer to 6.1.6, "Management of Dynamically-Assigned Identifiers", on page 56, for more information.

Functional Requirements

1. The computing function shall not fabricate its own Connection IDs. This will lead to unpredictable results.
2. The Connection IDs in events and service acknowledgements are always allocated by the switching function.
3. Computing functions can extract Device IDs from Connection IDs and use them on services that have Device ID parameters only if the Device ID extracted is a static Device ID that the switching function accepts. Otherwise, the Device ID cannot be used.
4. Computing functions shall extract Call IDs from Connection IDs, provided by the switching function, to correlate event reports associated with devices that are connected together in a call.
5. The computing function will always receive an event to indicate the termination of a Connection ID if the appropriate monitor is started. Refer to the individual services and events to better understand the meaning of individual events with respect to connection states.
6. If the computing function issues a service with a Connection ID that cannot be controlled by the switching function, the service will be rejected with a negative acknowledgement.
7. Connection IDs used as parameters can only have three formats:
   a. A *complete* Connection ID (i.e., call ID and device ID). This extracted from either events received by the computing function or positive acknowledgements received as a result of services issued.

      When supplied as a parameter, the Connection ID will be validated by the switching function with respect to the service being issued. If this Connection ID is not valid, the service request will be rejected with a negative acknowledgement.

   b. A *DeviceID only* Connection ID. If a service has more than one Connection ID parameter, the switching function supports this type of Connection ID, and the computing function wants to use this type of Connection ID, then all Connection ID parameters in the service shall be of this type.

      If this type of Connection ID is used as the Connection ID parameter for a service, then rules documented in the services sections will determine whether it is accepted or not by the switching function. If this type of Connection ID is not accepted, then the service will be rejected with a negative acknowledgement.

   c. A *Call ID only* Connection ID. In events, this format can only be used for the Call Cleared and Failed event. If this format is used for any service other than Clear Call, Monitor Start, or Snapshot Call, it will be rejected with a negative acknowledgement.
8. If a call changes its Call ID when a Conference or Transfer occurs, Connection IDs shall be provided to link the old Call IDs to the new Call IDs. When this occurs, the event will contain a list of originally known Connection IDs of devices that are still in the call along with the new replacement Connection IDs. When the new Connection IDs are created in such cases, new dynamic Device IDs may also be used to create the Connection IDs.

© ISO/IEC 2007 – All rights reserved

Copyright International Organization for Standardization
Provided by IHS under license with ISO
No reproduction or networking permitted without license from IHS
Not for Resale

9. Connection IDs that come from the switching function (events and positive acknowledgements to services) will always contain both the Call ID and Device ID portions (see item 7a above) except for the Call Cleared and Failed events that may also contain only a valid call ID in the connection ID (see item 7c above).
10. The computing function should never assume the reuse of callIDs, although some switching functions may reuse one or the other.

12.3.10 DCollCrossRefID

The DCollCrossRefID parameter type identifies a specific data collection that was initiated via the Start Data Collection service. The DCollCrossRefID is valid only for the duration of the data collection.

Format

This parameter type is a sequence of characters.

12.3.11 DeviceID

The DeviceID parameter type identifies or represents a device.

Format

This DeviceID parameter type consists of two components:

- Device Identifier - A mandatory component that specifies the device identifier as described in Clause 10, “CSTA Device Identifier Formats”, on page 97. This may include one of the following:
  - a character string when using the Diallable Digits and the Switching Function Representation formats.
  - an integer value when using the Device Number format.
- Media Call Characteristics - An optional component that specifies the media (voice, digital data, etc.) characteristics of the device. This may be used for selecting a device based upon a particular media capability, for example. Refer to 12.2.15, “MediaCallCharacteristics”, on page 113 for the complete set of possible values.

The maximum length of the Device Identifier component that is supported by the switching function is provided via the capabilities exchange services.

Functional Requirements

1. For more details on DeviceID parameter types, refer to 6.1.1, “Device”.
2. For information on DeviceID in Connection Identifiers, refer to 12.3.9, “ConnectionID”, on page 141 and 6.1.3, “Connection”, on page 49.

12.3.12 DisplayID

The DisplayID parameter type specifies a particular display associated with the device.

Format

This parameter type is a sequence of characters.

12.3.13 EscapeRegisterID

The EscapeRegisterID parameter type is used to identify an escape service registration.

© ISO/IEC 2007 – All rights reserved

Copyright International Organization for Standardization
Provided by IHS under license with ISO
No reproduction or networking permitted without license from IHS
Not for Resale

Format

This parameter type is a sequence of characters.

12.3.14 HookswitchID

The HookswitchID parameter type is used to specify the hookswitch to query at a specified device. If not provided, the default is to get the status of each hookswitch at the specified device.

Format

This parameter type is a sequence of characters.

12.3.15 IOCrossRefID

The IOCrossRefID parameter type identifies each I/O data path. The computing function receives a IOCrossRefID in each I/O service request. The Start Data Path service initiates an I/O data path. The IOCrossRefID is only valid for the duration of the data path.

The IOCrossRefID is unique within the I/O registration (IORegisterReqID). Some switching functions may provide the additional benefit of a unique IOCrossRefID across the entire switching sub-domain. This is also the case if I/O registration is not supported by the switching function.

The parameter type also specifies if the switching function or the computing function started the data path.

Format

This parameter type shall be one of the following:

- switchProvided (sequence of characters) - indicates that the switching function has started the data path.
- computerProvided (sequence of characters) - indicates that the computing function has started the data path.

12.3.16 IORegisterReqID

The IORegisterReqID parameter type identifies a I/O registration for which the computing function (acting as an I/O server) will receive I/O service requests. This identifier may be associated with a particular device within the switching sub-domain or it may indicate that the computing sub-domain is the I/O server for all devices within the switching sub-domain. When the computing function uses the I/O Register service to register for I/O services, it receives a IORegisterReqID in the positive acknowledgement sent by the switching function. The IORegisterReqID is only valid until the I/O registration is ended by the computing function or switching function.

IORegisterReqID parameters are unique across a given CSTA service boundary.

Format

This parameter type is sequence of characters.

12.3.17 LampID

The LampID parameter type specifies the lamp identifier.

Format

This parameter type is a sequence of characters.

© ISO/IEC 2007 – All rights reserved

Copyright International Organization for Standardization
Provided by IHS under license with ISO
No reproduction or networking permitted without license from IHS
Not for Resale

12.3.18 MediaServiceInstanceID

The MediaServiceInstanceID parameter type identifies a particular media access service instance (e.g., specific media access server or subsystem).

Format

This parameter type is a sequence of characters.

12.3.19 MediaStreamID

The MediaStreamID parameter type specifies a media stream identifier that can be used to access an attached media service. The usage of the mediaStreamID is defined by a particular media service.

Format

This parameter type is a sequence of characters. The maximum length supported by the switching function is provided via the capabilities exchange services.

12.3.20 MessageID

The MessageID parameter type specifies a particular Voice Unit message.

Format

This parameter type is character string. The maximum length supported by the switching function is provided via the capabilities exchange services.

12.3.21 MonitorCrossRefID

The MonitorCrossRefID parameter type specifies an identifier that is used to correlate an event to an established monitor. When a monitor is established using the Monitor Start service, a monitorCrossReferenceID parameter is returned as part of the positive acknowledgement message. This monitorCrossReferenceID parameter is included in every event for that specific monitor.

Format

This parameter type is a sequence of characters. The maximum length supported by the switching function is provided via the capabilities exchange services.

Functional Requirements

1. This parameter is allocated by the switching function.
2. The switching function is responsible for providing unique monitorCrossReferenceID parameters over a specific service boundary.

12.3.22 NetworkCalledDeviceID

For external incoming calls, this parameter specifies the called device information that was provided by the Network over a Network Interface Device. For example, this may contain DNIS (Dialed Number Identification Service) or DID (Direct Inward Dialing) digit information or a string of digits that represents the called device.

This information is established when the call is first created and stays with the call as long as the Network Interface Device (NID) associated with the original calling device remains in the call, even if the call is transferred from the original called device, for example.

© ISO/IEC 2007 – All rights reserved

Copyright International Organization for Standardization
Provided by IHS under license with ISO
No reproduction or networking permitted without license from IHS
Not for Resale

Format and Status

This device identifier type may be one of the following (see Clause 10, “CSTA Device Identifier Formats”, on page 97 for more information):

- a character string when using the Diallable Digits and the Switching Function Representation formats.
- an integer value when using the Device Number format.
- a value of “Not Known”.

Functional Requirements

1. This parameter will never contain the value “Not Required” or “Not Specified”.
2. This parameter type is different from the CalledDeviceID parameter type in that the CalledDeviceID information may change if the call is transferred and/or conferenced whereby the NetworkCalledDeviceID information does not change as long as the NID associated with the original calling device remains in the call. Also, the NetworkCalledDeviceID is limited to information passed over a Network Interface Device.

12.3.23 NetworkCallingDeviceID

For external incoming calls, this parameter specifies the calling device information that was provided by the Network over a Network Interface Device. For example, this may contain ANI (Automatic Number Identification), CLID (CallerID) or SID (Station Identification) digit information or a string of digits that represents the calling device.

This information is established when the call is first created and stays with the call as long as the Network Interface Device (NID) associated with the original calling device remains in the call, even if the call is transferred from the original called device, for example.

Format and Status

This device identifier type may be one of the following (see Clause 10, “CSTA Device Identifier Formats”, on page 97 for more information):

- a character string when using the Diallable Digits and the Switching Function Representation formats.
- an integer value when using the Device Number format.
- a value of “Not Known”.
- a value of “Restricted” - provided when the callingDeviceID cannot be provided due to regulatory and/or privacy reasons.

Functional Requirements

1. This parameter will never contain the value “Not Required” or “Not Specified”.
2. This parameter type is different from the CallingDeviceID parameter type in that the CallingDeviceID information may change if the call is transferred and/or conferenced whereby the NetworkCallingDeviceID information does not change as long as the NID associated with the original calling device remains in the call. Also, the NetworkCallingDeviceID is limited to information passed over a Network Interface Device.

12.3.24 RedirectionDeviceID

The RedirectionDeviceID parameter type describes the last device known by the switching function from which the current call was routed. “Routed” includes forwarded from, diverted from, or redirected from.

© ISO/IEC 2007 – All rights reserved

Copyright International Organization for Standardization
Provided by IHS under license with ISO
No reproduction or networking permitted without license from IHS
Not for Resale

Format and Status

This device identifier type may be one of the following (see Clause 10, “CSTA Device Identifier Formats”, on page 97 for more information):

- a character string when using the Diallable Digits and the Switching Function Representation formats.
- an integer value when using the Device Number format.
- “Provided” - indicates that the DeviceID of the last redirection device is provided.
- “Not Known” - indicates that the call has been redirected but the switching function cannot provide the DeviceID.
- “Not Required” - indicates that the current call has never been redirected during the existence of the call.
- “Not Specified” - indicates that the switching function cannot determine whether or not the call has ever been redirected.
- “Restricted” - provided when the device cannot be provided due to regulatory and/or privacy reasons.

Functional Requirements

1. The information in a device identifier of this type will stay with the call until the call is established. If the call is routed multiple time before it is established, then the information in this parameter will be updated to the last known device from which the call was routed. If the call was redirected from a device, but the device identifier is unknown, “Not Known” shall be used. Depending on the capabilities of the switching function, the last known device for the call might be reflected by only one device identifier and in actuality the call might have been routed several times before arriving at the final destination.

   Note that in the case of Immediate Forwarding, where forwarding is triggered *before* the call is delivered to a device, the lastRedirectionDevice in the event associated with the delivery of the call to a new device (after it was immediately forwarded) shall contain “Not Known”. Refer to 6.7.1, “Forwarding”, on page 69 for more information.

12.3.25 ResourceID

The ResourceID parameter type specifies a particular Voice device resource.

Format

This parameter type is character string.

12.3.26 RingerID

Specifies the ringer identifier associated with a physical element.

A device can be associated with one or more ringers.

Format

This parameter type is sequence of characters.

12.3.27 RouteingCrossRefID

The routeingCrossRefID parameter type identifies each routeing dialogue. The computing function receives a routeingCrossRefID in each Route Request service request. The Route Request service initiates a routeing dialogue. The routeingCrossRefID is only valid for the duration of the routeing dialogue pertaining to a specific call.

© ISO/IEC 2007 – All rights reserved

Copyright International Organization for Standardization
Provided by IHS under license with ISO
No reproduction or networking permitted without license from IHS
Not for Resale

The routeingCrossRefID is unique within the routeing registration (routeRegisterReqID). Some switching functions may provide the additional benefit of a unique routeing cross reference identifier across the entire switching sub-domain. This is also the case if routeing registration is not supported by the switching function.

Format

This parameter type is a sequence of characters.

12.3.28 RouteRegisterReqID

The RouteRegisterReqID parameter type identifies a routeing registration for which the computing function (acting as a routeing server) will receive routeing requests. This identifier may be associated with a particular routeing device within the switching sub-domain or it may indicate that the computing sub-domain is the routeing server for all routeing devices within the switching sub-domain. When the computing function uses the Route Register service to register for routeing services, it receives a routeRegisterReqID in the positive acknowledgement sent by the switching function. The routeRegisterReqID is only valid until the routeing registration is ended by the computing function or switching function.

routeRegisterReqID parameters are unique across a given CSTA service boundary.

Format

This parameter type is a sequence of characters.

12.3.29 ServiceCrossRefID

The ServiceCrossRefID parameter type specifies an identifier that is used to correlate one service request to another service request.

For example, a service may be specified to request information from a switching function using an asynchronous mechanism. In this case there would be a service request from the computing function requesting information. The switching function would return a ServiceCrossRefID in the positive acknowledgement to this request. The switching function would subsequently send messages in the form of Service Requests to the computing function that would contain the same ServiceCrossRefID that could be used to correlate the service request with the original service request.

Format

This parameter type is sequence of characters.

Functional Requirements

1. This parameter is allocated by the switching function.
2. The switching function is responsible for providing unique ServiceCrossRefIDs over a specific CSTA service boundary.

12.3.30 SubjectDeviceID

The SubjectDeviceID parameter type represents a device which is the focus of the action associated with the event being reported.

Format and Status

This device identifier type may be one of the following (see Clause 10, “CSTA Device Identifier Formats”, on page 97 for more information):

- a character string when using the Diallable Digits and the Switching Function Representation formats.

© ISO/IEC 2007 – All rights reserved

Copyright International Organization for Standardization
Provided by IHS under license with ISO
No reproduction or networking permitted without license from IHS
Not for Resale

- an integer value when using the Device Number format.
- a value of “Not Known”.

12.3.31 SysStatRegisterID

The SysStatRegisterID parameter type is used to identify system status registration.

Format and Status

This parameter type is a sequence of characters.

13 Capability Exchange Services

This clause describes the Capability Exchange Services.

13.1 Services

Table 13-1 Capability Exchange Services Summary

Capability Exchange Service	Description	Pg.
13.1.1 Get CSTA Features	Obtains the list of supported CSTA services and events.	149
13.1.2 Get Logical Device Information	Obtains the current set of logical device information for a given device identifier.	151
13.1.3 Get Physical Device Information	Obtains the current set of physical device information for a given device identifier.	161
13.1.4 Get Switching Function Capabilities	Obtains the current set of capabilities for the entire switching function.	165
13.1.5 Get Switching Function Devices	Obtains the devices in the application working domain (i.e. devices that can be controlled and/or observed).	180
13.1.6 Switching Function Devices	Provides the actual list of devices in the application working domain (i.e. devices that can be controlled and/or observed).	182

13.1.1 Get CSTA Features

C → S

The Get CSTA Features service obtains the list of CSTA services and events supported by the switching function.

13.1.1.1 Service Request

Table 13-2 Get CSTA Features—Service Request

Parameter Name	Type	M/ O/C	Description
security	CSTASecurityData	O	Specifies timestamp information, message sequence number, and security information.
privateData	CSTAPrivateData	O	Specifies non-standardized information.

13.1.1.2 Service Response

This service follows the atomic acknowledgement model for this request.

© ISO/IEC 2007 – All rights reserved

Copyright International Organization for Standardization
Provided by IHS under license with ISO
No reproduction or networking permitted without license from IHS
Not for Resale

13.1.1.2.1 Positive Acknowledgement

Table 13-3 Get CSTA Features—Positive Acknowledgement

Parameter Name	Type	M/ O/C	Description
supportedServices	Bitmap	M	Specifies the list of CSTA services supported by the switching function. Each entry in the lists represents a supported service. Services are organized into the following categories: • capExchangeServList (O) CapExchangeServList • systemStatServList (O) SystemStatServList • monitoringServList (O) monitoringServList • snapshotServList (O) snapshotServList • callControlServList (O) CallControlServList • callAssociatedServList (O) CallAssociatedServList • mediaServList (O) MediaServList • routeingServList (O) routeingServList • physDevServList (O) physDevServList • logicalServList (O) LogicalServList • ioServicesServList (O) IOServicesServList • dataCollectionServList (O) DataCollectionServList • voiceServList (O) VoiceServList • cDRServList (O) CDRServList • vendorSpecificServList (O) VendorSpecificServList If a service's bitmap entry is not included in the list, then the service is not supported by any device in the switching function.
supportedEvents	Bitmap	M	Specifies the list of CSTA events supported by the switching function. Each entry in the lists represents a supported event. Events are organized into the following categories: • callControlEvtsList (O) CallControlEvtsList • callAssociatedEvtsList (O) CallAssociatedEvtsList • mediaEvtsList (O) MediaEvtsList • physDevEvtsList (O) physDevEvtsList • logicalEvtsList (O) LogicalEvtsList • deviceMaintEvtsList (O) DeviceMaintEvtsList • voiceEvtsList (O) VoiceEvtsList • vendorSpecificEvtsList (O) VendorSpecificEvtsList If an event's bitmap entry is not included in the list, then the event is not supported by any device in the switching function.
security	CSTASecurityData	O	Specifies timestamp information, message sequence number, and security information.
privateData	CSTAPrivateData	O	Specifies non-standardized information.

13.1.1.2.2 Negative Acknowledgement

The negative acknowledgement error codes are described in 12.2.14, “ErrorValue”, on page 115.

--`,,```,,,,````-`-`,,`,,`,`,,`---
© ISO/IEC 2007 – All rights reserved
Copyright International Organization for Standardization
Provided by IHS under license with ISO
No reproduction or networking permitted without license from IHS
Not for Resale

13.1.1.3 Operational Model

13.1.1.3.1 Connection State Transitions

There are no connection state changes as the result of this service.

13.1.1.3.2 Device-Type Monitoring Event Sequences

There are no events generated as a result of this service.

13.1.1.3.3 Call-Type Monitoring Event Sequences

There are no events generated as a result of this service.

13.1.1.3.4 Functional Requirements

1. The services provided in the positive response reflect the list of services supported by some or all of the devices in the switching function. Some services may not be supported for a particular device in the switching function. An application can determine if a service is supported by a particular device by one of the following mechanisms:
   a. Use the Get Logical Device Information service or the Get Physical Device Information service to determine the CSTA services supported by a specificdevice.
   b. Use the servicesPermitted parameter (12.2.22, “ServicesPermitted”, on page 134) to determine the services that can be applied to a connection.
2. The events provided in the positive response reflect the list of events supported by some or all of the devices in the switching function for all of the possible types of monitors. Some events may not be supported for a particular device in the switching function or when a specific monitor type is used. An application can determine if an event is supported by a particular device by:
   a. Use the Get Logical Device Information service or the Get Physical Device Information service to determine the CSTA events supported by a specific device for a specific type of monitor.

13.1.2 Get Logical Device Information C → S

The Get Logical Device Information service is used to obtain the current set of characteristics/capabilities associated with the logical element of a given device.

13.1.2.1 Service Request

Table 13-4 Get Logical Device Information—Service Request

Parameter Name	Type	M/ O/C	Description
device	DeviceID	M	Specifies the device being queried.
security	CSTASecurityData	O	Specifies timestamp information, message sequence number, and security information.
privateData	CSTAPrivateData	O	Specifies non-standardized information.

13.1.2.2 Service Response

This service follows the atomic acknowledgement model for this request.

© ISO/IEC 2007 – All rights reserved

Copyright International Organization for Standardization
Provided by IHS under license with ISO
No reproduction or networking permitted without license from IHS
Not for Resale

13.1.2.2.1 Positive Acknowledgement

Table 13-5 Get Logical Device Information—Positive Acknowledgement

Parameter Name	Type	M/ O/C	Description
deviceCategory	Enumerated	M	Specifies the device category (station, ACD device, etc.) of the device in the service request. The complete set of possible values is: • ACD • Group • Network Interface (e.g., trunk, CO line) • Park • Routeing Device • Station (default) • Voice Unit • Generic Interactive Voice • Listener Interactive Voice • DTMF Interactive Voice • Prompt Interactive Voice • Prompt Queue Interactive Voice • Message Interactive Voice • Other
groupDeviceAttributes	Bitmap	C	Specifies the group device attributes of the device being queried. If a bit is TRUE then the specified attribute is present. The following is the list of bits (multiple bits may be set): • ACD • Hunt • Pick • User • Agent • Other This parameter shall be provided if the deviceCategory is Group, otherwise it shall not be provided.

© ISO/IEC 2007 – All rights reserved
Copyright International Organization for Standardization
Provided by IHS under license with ISO
No reproduction or networking permitted without license from IHS
Not for Resale

Table 13-5 Get Logical Device Information—Positive Acknowledgement (continued)

Parameter Name	Type	M/ O/C	Description
namedDeviceTypes	Enumerated	O	If assigned by the switching function, this parameter indicates the named device type associated with the device in the service request. The complete set of possible values are: • ACD • ACD Group • Button • Button Group • Conference Bridge • Line • Line Group • Operator • Operator Group • Parking Device • Station • Station Group • Trunk • Trunk Group • Other • Other Group
shortFormDeviceID	DeviceID	O	Specifies an alternative (a shorter length, for example) device identifier that the switching function may use to reference the device in the service request.
hasPhysicalElement	Boolean	M	Specifies if the device has a physical element associated with this device identifier. The complete set of possible values is: • FALSE - The device does not have a physical element. • TRUE - The device does have a physical element. The device identifier in the service request should be used with the Get Physical Device Information service to obtain the physical element's characteristics for this device.
acdModels	Bitmap	M	Specifies the type of ACD Model(s) that are present at this device. If a bit is TRUE, then the specified model is supported. The following is the list of bits (multiple bits may be set): • Visible ACD-related Devices • Non-Visible ACD-related Devices Note that these bits are valid when the device is an ACD device.

© ISO/IEC 2007 – All rights reserved

Copyright International Organization for Standardization
Provided by IHS under license with ISO
No reproduction or networking permitted without license from IHS
Not for Resale

Table 13-5 Get Logical Device Information—Positive Acknowledgement (continued)

Parameter Name	Type	M/ O/C	Description
agentLogOnModels	Bitmap	C	Specifies the types of agent log on models that are supported by the device. If a bit is TRUE, then the specified agent log on model is supported. The following is the list of bits (multiple bits may be set): • Log On to an ACD device • Log On to an ACD Group (explicit/one step) • Log On to an ACD Group (explicit/two steps) • Log On to an ACD Group (implicit/one step) Note that Log On to an ACD Group (implicit/one step) model cannot be simultaneously supported with the Log On to an ACD device model. The switching function shall provide this parameter if the agent log on model is configured by the switching function at the logical device element level (agent, ACD device, or ACD group), otherwise the parameter may or may not be provided.
appearanceAddressable	Boolean	M	Specifies whether the appearances of the logical element are addressable (via the Call Appearance “CA” string or the physical element extension “EXT” string in the Switching Function Representation Device Identifier format). The complete set of possible values is: • FALSE - The appearances are not addressable. • TRUE - The appearances are addressable
appearanceType	Enumerated	M	Specifies the type of appearances associated with the logical element. The complete set of possible values is: • Selected-Standard • Basic-Standard • Basic-Bridged • Exclusive-Bridged • Independent-Shared-Bridged • Interdependent-Shared-Bridged
appearanceList	List of Characters	C	Specifies the list of device identifier suffices for each of the appearances that are available at the logical element. This parameter is mandatory if the appearances are addressable and if it is a Selected-Standard or a Basic-Standard type. This list will only contain appearance suffices that can be observed and/or controlled within the switching sub-domain (via the Call Appearance string in the Switching Function Representation Device Identifier format).

© ISO/IEC 2007 – All rights reserved

Copyright International Organization for Standardization
Provided by IHS under license with ISO
No reproduction or networking permitted without license from IHS

Not for Resale

Table 13-5 Get Logical Device Information—Positive Acknowledgement (continued)

Parameter Name	Type	M/ O/C	Description
otherPhysicalDeviceList	List of DeviceIDs	C	Specifies the list of device identifiers for other devices with physical elements that are associated with the logical element appearance. This parameter is mandatory if the appearances are addressable and any type of bridged appearance. The Get Physical Device Information service should be used to obtain the physical element characteristics associated with these other devices. This list will only contain devices that can be either observed and/or controlled within the switching sub-domain. Note that, for a Hybrid configuration, the order of device identifiers in this list is the same as the order of devices in the appearanceList parameter. See Functional Requirement #3 in 10.1.2 for additional information.
miscMonitorCaps	Bitmap	O	Specifies the special types of monitoring considerations for this device. If a bit is TRUE then the monitoring consideration is associated with the device. The following is the list of bits (Multiple bits may be set): • Group Inclusive Model - the scope of the monitor on the group device includes the distribution mechanism and all member devices. This bit is only valid for group devices that include a distribution mechanism (e.g. Hunt and ACD groups). This bit shall not be set if the Group Exclusive Model bit is set. • Group Exclusive Model - the scope of the monitor on the group device includes only the distribution mechanism. This bit is only valid for group devices that include a distribution mechanism (e.g. Hunt and ACD groups). This bit shall not be set if the Group Inclusive Model bit is set • Monitor the physical element to report call control events for all appearances associated with a device. (Only a valid bit if the appearanceType is any form of bridge appearance.) (i.e. use the device identifiers from the otherPhysicalDeviceList). • ACD Device Inclusive - the scope of the monitor on an ACD device includes both the ACD device and the distributed-to devices (including ACD groups). (This capability is valid only for ACD devices). This bit shall not be set if the ACD Device Exclusive bit is set • ACD Device Exclusive - the scope of the monitor on an ACD device only the ACD device. (This capability is valid only for ACD devices). This bit shall not be set if the ACD Device Inclusive bit is set Note that if this parameter is not present, then the monitoring considerations are not known.
associatedGroupList	List of DeviceIDs	C	Specifies the list of device identifiers for all the other devices which are members of this group device. Use the appropriate capabilities exchange services to obtain the characteristics of these devices. This list shall only contain devices that can be either observed and/or controlled within the switching sub-domain. This parameter shall be provided when the device is a Group device. It may or may not be provided if the device is a member of a group and shall not be provided if the device is neither a Group device nor is a member of a group.

© ISO/IEC 2007 – All rights reserved

Copyright Internationai Organization for Standardization
Provided by IHS under license with ISO
No reproduction or networking permitted without license from IHS
Not for Resale

Table 13-5 Get Logical Device Information—Positive Acknowledgement (continued)

Parameter Name	Type	M/ O/C	Description
maxCallbacks	Value	O	Specifies the maximum number of concurrent call back requests that can be outstanding for this device. If this parameter is not present, then the maximum number of concurrent callback requests is not known for the device.
maxAutoAnswerRings	Value	O	Specifies the maximum number of rings before a call is auto-answered at this device. If this parameter is not present, then the maximum number of Auto Answer rings is not known for the device.
maxActiveCalls	Value	O	Specifies the maximum number of concurrent calls that can be active at any one time for this device. If this parameter is not present, then the maximum number of active calls is not known for the device.
maxHeldCalls	Value	O	Specifies the maximum number of concurrent calls that can be held at any one time for this device. If this parameter is not present, then the maximum number of held calls is not known for the device.
maxFwdSettings	Value	O	Specifies the maximum number of user-specified settings (forwarding-type/forward-destination combinations) that can be activated at any one time for this device. If this parameter is not present, then the maximum number of activated user-specified settings is not known for the device.
maxDevicesInConf	Value	O	Specifies the maximum number of devices both within and outside the switching function that this device can conference into a call. If this parameter is not present, then the maximum number of devices in a conference is not known for the device. The minimum value that can be supplied for this value is 3.
transAndConfSetup	Bitmap	O	Specifies the different ways that this device can set up for a conference and/or transfer. (Note that if this parameter is not present, then the device can only set up transfers and conferences through the Consultation Call service.) If the bit is TRUE, then the specified way to setup a conference or transfer is supported by the switching function. The following is the list is of bits (multiple bits may be set): • Consultation Call • Hold Call - Make Call • Alternate Call • two calls in the initial state of Hold • two calls in the initial state of Connected
deviceOnDeviceMonitorFilter	MonitorFilter	C	Specifies the complete monitorFilter parameter that this device supports with respect to device-type monitoring. This parameter shall be provided if this form of device-type monitoring is supported, otherwise the parameter shall not be provided. The information in the monitor filter parameters used in the Get Logical Device Information and the Get Physical Device Information services should be the same when the same device identifier is used (assuming that the device identifier has a logical and a physical element).

--`,,```,,,,````-`-`,,`,,`,`,,`---
© ISO/IEC 2007 – All rights reserved
Copyright International Organization for Standardization
Provided by IHS under license with ISO
No reproduction or networking permitted without license from IHS
Not for Resale

Table 13-5 Get Logical Device Information—Positive Acknowledgement (continued)

Parameter Name	Type	M/ O/C	Description
deviceOnConnectionMonitorFilter	MonitorFilter	C	Specifies the complete monitorFilter parameter that connections at this device supports with respect to device-type monitoring. This parameter shall be provided if this form of device-type monitoring is supported, otherwise the parameter shall not be provided.
callOnDeviceMonitorFilter	MonitorFilter	C	Specifies the complete monitorFilter parameter that this device supports with respect to call-type monitoring on a device. This parameter shall be provided if this form of call-type monitoring is supported, otherwise the parameter shall not be provided.
callOnConnectionMonitorFilter	MonitorFilter	C	Specifies the complete monitorFilter parameter that this device supports with respect to call-type monitoring for a connection at this device. This parameter shall be provided if this form of call-type monitoring is supported, otherwise the parameter shall not be provided.
mediaClassSupport	Bitmap	O	Specifies the media class of calls that the device can support. If a bit is TRUE then the specified type of call can be present at the device. The following is the list of bits (multiple bits may be set): • Audio • Data • Image • Voice • Other • Chat • Email • Message • IM • SMS • MMS

© ISO/IEC 2007 – All rights reserved

Copyright International Organization for Standardization
Provided by IHS under license with ISO
No reproduction or networking permitted without license from IHS
Not for Resale

Table 13-5 Get Logical Device Information—Positive Acknowledgement (continued)

Parameter Name	Type	M/ O/C	Description

mediaServiceCapsList	List of Structures	C	Specifies a list of structures of the media service types, version, media service instances, connection modes supported. This parameter is a list, each element of which contains the following:
			• mediaServiceType (M) MediaServiceType - A media service type used to identify the media service.
			• mediaSeviceVersion (O) Value - The version of the media service.
			• mediaServiceInstance (O) MediaServiceInstanceID - A media service instance associated with the media service.
			• connectionModeBMap (O) Bitmap - The media service connection modes supported for the media service type, version and instance. The following is the list of bits (multiple bits may be set):
			  • consultationConference
			  • consultationConferenceHold
			  • deflect
			  • directedPickup
			  • join
			  • singleStepConference
			  • singleStepConferenceHold
			  • singleStepTransfer
			  • transfer
			  • direct
			• mediaStreamIDSupported (M) Boolean - Specifies if the mediaStreamID is supported for the combination of media service type, version, and instance. The complete set of values is:
			  • TRUE - indicates that the switching function shall provide the conditional mediaStreamID parameter where specified.
			  • FALSE - indicates that the conditional mediaStreamID is not provided.
			This parameter shall be provided if the device is capable of media access and shall not be provided otherwise.

connectionRateList	List of Values	O	Specifies the list of connection rates that are supported for this device.
delayToleranceList	List of Values	O	Specifies the list of delay Tolerances that are supported for this device.
numberOfChannels	Value	O	Specifies the number of available channels at this device. If the parameter is not present, the number of channels at the device is not known but it is one or greater.
maxChannelBind	Value	O	Specifies the maximum number of channels that can be associated with a given connection at a device. If the parameter is not present, the maximum number of channels per connection is one.

© ISO/IEC 2007 – All rights reserved

Copyright International Organization for Standardization
Provided by IHS under license with ISO
No reproduction or networking permitted without license from IHS

Not for Resale

Table 13-5 Get Logical Device Information—Positive Acknowledgement (continued)

Parameter Name	Type	M/ O/C	Description
routeingServList	RouteingServList	C	Specifies a list of bitmaps. Each bitmap entry represents a Routeing service that is supported by the device (both service requests to and from the switching function, when the service is bi-directional). This includes the following categories of services: • Routing Services This parameter shall be provided if the switching function supports any of these categories of services for this device. If a Routeing service's bitmap entry is not included in the list, then the service is not supported by the switching function. Note that the Routeing Mode feature is grouped with Logical Device features.
logDevServList	Structure	C	Specifies a list of capability bitmap parameter types corresponding to categories of services. Each bitmap entry in the lists represents a service that applies to a logical device that is supported by the device. This includes the following categories of services: • callControlServList (O) CallControlServList - specifies the list of call control services supported. • callAssociatedServList (O) CallAssociatedServList - specifies the list of call associated services supported. • logicalServList (O) LogicalServList - specifies the list of logical device feature services supported. • mediaServList (O) MediaServList - specifies the list of media services supported. • ioServicesServList (O) IOServicesServList - specifies the list of I/O services supported. • dataCollectionServList (O) DataCollectionServList - specifies the list of data collection services supported. • voiceServList (O) VoiceServList - specifies the list of voice services supported. This parameter shall be provided if the switching function supports at least one of these categories of services for this device. If a logical device service's bitmap entry is not included in the list, then the service is not supported by the device.

© ISO/IEC 2007 – All rights reserved

Copyright International Organization for Standardization
Provided by IHS under license with ISO
No reproduction or networking permitted without license from IHS
Not for Resale

Table 13-5 Get Logical Device Information—Positive Acknowledgement (continued)

Parameter Name	Type	M/ O/C	Description
logDevEvtsList	Structure	C	Specifies a list of capability bitmap parameter types corresponding to categories of events. Each bitmap entry in the lists represents an event that applies to a logical device that is supported by the device. This includes the following categories of events: • callControlEvtsList (O) CallControlEvtsList - specifies the list of call control events supported. • callAssociatedEvtsList (O) CallAssociatedEvtsList - specifies the list of call associated events supported. • logicalEvtsList (O) LogicalEvtsList - specifies the list of logical device feature events supported. • mediaEvtsList (O) MediaEvtsList - specifies the list of media events supported. • voiceEvtsList (O) VoiceEvtsList - specifies the list of voice events supported. This parameter shall be provided if the switching function supports any of these categories of events for this device. If a logical device event's bitmap entry is not included in the list, then the event is not supported by the device.
deviceMaintEvtsList	DeviceMaintEvts List	C	Specifies a list of bitmaps. Each bitmap entry represents a device maintenance event that is supported by the device. This includes the following categories of services: • Device Maintenance events This parameter shall be provided if the switching function supports any of these categories of events for this device. If a device maintenance's bitmap entry is not included in the list, then the event is not supported by the switching function.
security	CSTASecurityData	O	Specifies timestamp information, message sequence number, and security information.
privateData	CSTAPrivateData	O	Specifies non-standardized information.

13.1.2.2.2 Negative Acknowledgement

The negative acknowledgement error codes are described in 12.2.14, “ErrorValue”, on page 115.

13.1.2.3 Operational Model

13.1.2.3.1 Connection State Transitions

There are no connection state changes as the result of this service.

13.1.2.3.2 Device-Type Monitoring Event Sequences

There are no events generated as a result of this service.

13.1.2.3.3 Call-Type Monitoring Event Sequences

There are no events generated as a result of this service.

© ISO/IEC 2007 – All rights reserved

Copyright International Organization for Standardization
Provided by IHS under license with ISO
No reproduction or networking permitted without license from IHS
Not for Resale

13.1.2.3.4 Functional Requirements

1. This service shall be rejected with a negative acknowledgement (i.e., Error Value of Object Not Known), if the device does not contain a logical element.

13.1.3 Get Physical Device Information C ⟶ S

The Get Physical Device Information service is used to obtain the current set of characteristics/capabilities associated with the physical element of a given device.

13.1.3.1 Service Request

Table 13-6 Get Physical Device Information—Service Request

Parameter Name	Type	M/ O/C	Description
device	DeviceID	M	Specifies the device being queried.
security	CSTASecurityData	O	Specifies timestamp information, message sequence number, and security information.
privateData	CSTAPrivateData	O	Specifies non-standardized information.

13.1.3.2 Service Response

This service follows the atomic acknowledgement model for this service request.

13.1.3.2.1 Positive Acknowledgement

Table 13-7 Get Physical Device Information—Positive Acknowledgement

Parameter Name	Type	M/ O/C	Description
deviceCategory	Enumerated	M	Specifies the device category (station, ACD device, etc.) of the device being queried. The complete set of possible values is: • ACD • Group • Network Interface (i.e., trunk) • Park • Routeing • Station (default) • Voice Unit • Generic Interactive Voice • Listener Interactive Voice • DTMF Interactive Voice • Prompt Interactive Voice • Prompt Queue Interactive Voice • Message Interactive Voice • Other

© ISO/IEC 2007 – All rights reserved

Copyright International Organization for Standardization
Provided by IHS under license with ISO
No reproduction or networking permitted without license from IHS
Not for Resale

Table 13-7 Get Physical Device Information—Positive Acknowledgement (continued)

Parameter Name	Type	M/ O/C	Description
groupDeviceAttributes	Bitmap	C	Specifies the group device attributes of the device being queried. If a bit is TRUE then the specified attribute is present. The following is the list of bits (multiple bits may be set): • ACD • Hunt • Pick • User • Agent • Other This parameter shall be provided if the deviceCategory is Group, otherwise it shall not be provided.
namedDeviceTypes	Enumerated	O	If assigned by the switching function, this parameter indicates the named device type associated with the device being queried. The complete set of possible values are: • ACD • ACD Group • Button • Button Group • Conference Bridge • Line • Line Group • Operator • Operator Group • Parking Device • Station • Station Group • Trunk • Trunk Group • Other • Other Group
hasLogicalElement	Boolean	M	Specifies if the device has a logical element associated with this device identifier. The complete set of possible values is: • FALSE - The device does not have a logical element. • TRUE - The device does have a logical element. The device identifier in the service request should be used with the Get Logical Device Information service to obtain the logical element's characteristics for this device.
otherLogicalDeviceList	List of Device IDs	O	Specifies the list of device identifiers for other devices with logical elements that are associated with this device. The Get Logical Device Information service should be used to obtain the logical element characteristics associated with these other devices. This list will only contain devices that can be either observed and/or controlled within the switching function.

© ISO/IEC 2007 – All rights reserved
--`,,```,,,,````-`-`,,`,,`,`,,`---
Copyright International Organization for Standardization
Provided by IHS under license with ISO
No reproduction or networking permitted without license from IHS
Not for Resale

Table 13-7 Get Physical Device Information—Positive Acknowledgement (continued)

Parameter Name	Type	M/ O/C	Description
deviceModelName	Characters	O	Specifies the switching function specific model name of the device. If this parameter is not present, then the model name is not known.
deviceOnDeviceMonitorFilter	MonitorFilter	C	Specifies the complete monitorFilter parameter that the device supports with respect to device-type monitoring. This parameter shall be provided if this form of device-type monitoring is supported, otherwise the parameter shall not be provided. The information in the monitor filter parameters used in the Get Logical Device Information and the Get Physical Device Information services should be the same when the same device identifier is used (assuming that the device identifier has a logical and a physical element).
deviceOnConnectionMonitorFilter	MonitorFilter	C	Specifies the complete monitorFilter parameter that a connection at the device supports with respect to device-type monitoring. This parameter shall be provided if this form of device-type monitoring is supported, otherwise the parameter shall not be provided.
callOnDeviceMonitorFilter	MonitorFilter	C	Specifies the complete monitorFilter parameter that the device supports with respect to call-type monitoring on a device. This parameter shall be provided if this form of call-type monitoring is supported, otherwise the parameter shall not be provided.
callOnConnectionMonitorFilter	MonitorFilter	C	Specifies the complete monitorFilter parameter that the device supports with respect to call-type monitoring on a connection at the device. This parameter shall be provided if this form of call-type monitoring is supported, otherwise the parameter shall not be provided.
maxDisplays	Value	O	Specifies the maximum number of displays associated with the device being queried. If this parameter is not present, then the device either does not have any displays or the maximum number of displays at this device is not known.
maxButtons	Value	O	Specifies the maximum number of buttons associated with the device being queried. If this parameter is not present, then the device either does not have any buttons or the maximum number of buttons at this device is not known.
maxLamps	Value	O	Specifies the maximum number of lamps associated with the device being queried. If this parameter is not present, then the device either does not have any lamps or the maximum number of lamps at this device is not known.
maxRingPatterns	Value	O	Specifies the maximum number of ring patterns that the ringer has for the device being queried. If this parameter is not present, then the device either does not have a ringer or the maximum number of ring patterns at this device is not known.

© ISO/IEC 2007 – All rights reserved

Copyright International Organization for Standardization
Provided by IHS under license with ISO
No reproduction or networking permitted without license from IHS
Not for Resale

Table 13-7 Get Physical Device Information—Positive Acknowledgement (continued)

Parameter Name	Type	M/ O/C	Description
physDevServList	PhysDevServList	C	Specifies a list of bitmaps. Each bitmap entry represents a Physical Device service that is supported by the specified device. This includes the following categories of services: • Physical Device Feature services This parameter shall be provided if the switching function supports any of these categories of services for this device. If a physical device service's bitmap entry is not included in the list, then the service is not supported by the specified device.
physDevEvtsList	PhysDevEvtsList	C	Specifies a list of bitmaps. Each bitmap entry represents a Physical Device Event that is supported by the specified device. This includes the following categories of events: • Physical Device Feature events This parameter shall be provided if the switching function supports any of these categories of events for this device. If a physical device event's bitmap entry is not included in the list, then the event is not supported by the specified device.
security	CSTASecurityData	O	Specifies timestamp information, message sequence number, and security information.
privateData	CSTAPrivateData	O	Specifies non-standardized information.

13.1.3.2.2 Negative Acknowledgement

The negative acknowledgement error codes are described in 12.2.14, “ErrorValue”, on page 115.

13.1.3.3 Operational Model

13.1.3.3.1 Connection State Transitions

There are no connection state changes as the result of this service.

13.1.3.3.2 Device-Type Monitoring Event Sequences

There are no events generated as a result of this service.

13.1.3.3.3 Call-Type Monitoring Event Sequences

There are no events generated as a result of this service.

13.1.3.3.4 Functional Requirements

1. This service shall be rejected with a negative acknowledgement (i.e., Error Value of Object Not Known), if the device does not have a physical element.
2. In order to obtain the entire set of physical device capabilities and characteristics, the computing function shall also use the Get Button Information, Get Lamp Information, and Get Display services to collect the detailed information on the device's buttons, lamps, and displays.

© ISO/IEC 2007 – All rights reserved
--`,,```,,,,````-`-`,,`,,`,`,,`---
Copyright International Organization for Standardization
Provided by IHS under license with ISO
No reproduction or networking permitted without license from IHS
Not for Resale

13.1.4 Get Switching Function Capabilities

C ⟶ S

The Get Switching Function Capabilities service is used by the computing function to obtain the current set of capabilities for the entire switching function.

13.1.4.1 Service Request

Table 13-8 Get Switching Function Capabilities—Service Request

Parameter Name	Type	M/ O/C	Description
security	CSTASecurityData	O	Specifies timestamp information, message sequence number, and security information.
privateData	CSTAPrivateData	O	Specifies non-standardized information.

13.1.4.2 Service Response

This service follows the atomic acknowledgement model for this service request.

13.1.4.2.1 Positive Acknowledgement

Table 13-9 Get Switching Function Capabilities—Positive Acknowledgement

Parameter Name	Type	M/ O/C	Description
switchingSubDomainName	Character (64)	M	Specifies the name of switching sub-domain which distinguishes it from other switching sub-domains.
manufacturerName	Characters (64)	M	Specifies the name of the manufacturer of the switching sub-domain.
profiles	Bitmap	M	Specifies the CSTA Profiles supported by the switching function. The following is the list of the possible profiles (multiple bits may be set): • Basic Telephony Profile • Routing Profile • Level 1a Voice Browser Profile • Level 1b Voice browser Profile • Level 2 Voice Browser Profile • Minimal Endpoint Call Control Profile • Basic Endpoint Call Control Profile • Advanced Endpoint Call Control Profile • Conferencing Endpoint Call Control Profile • Basic Endpoint Device Feature Profile • Advanced Endpoint Device Feature Profile • Basic Speech Service Profile • Advanced Speech Service Profile Note that at least one profile shall be supported by the switching function.

© ISO/IEC 2007 – All rights reserved

Copyright International Organization for Standardization
Provided by IHS under license with ISO
No reproduction or networking permitted without license from IHS
Not for Resale

Table 13-9 Get Switching Function Capabilities—Positive Acknowledgement (continued)

Parameter Name	Type	M/ O/C	Description
deviceIDFormat	Bitmap	M	Specifies the types of device ID formats supported by the switching function in service requests. If a bit is TRUE, then the specified format is used by the switching function. The following is the list of the possible formats (multiple bits may be set): • Diallable Digits format - “*” • Diallable Digits format - “#” • Diallable Digits format - “A-D” • Diallable Digits format - “!” • Diallable Digits format - “P” • Diallable Digits format - “T” • Diallable Digits format - “,” • Diallable Digits format - “W” • Diallable Digits format - “@” • Diallable Digits format - “$” • Diallable Digits format - “;” • SF Representation format - “!” • SF Representation format - “&” • SF Representation format - “/” • SF Representation format - “%” • SF Representation format - “NM” • SF Representation format - Generic • SF Representation format - ImplicitTON • SF Representation format - PublicTON - unknown • SF Representation format - PublicTON - international number • SF Representation format - PublicTON - national • SF Representation format - PublicTON - subscriber • SF Representation format - Public TON - abbreviated • SF Representation format - PrivateTON - unknown • SF Representation format - PrivateTON - level 3 regional • SF Representation format - PrivateTON - level 2 regional • SF Representation format - PrivateTON - level 1 regional • SF Representation format - PrivateTON - local • SF Representation format - PrivateTON - abbreviated • SF Representation format - Other • Device Number format • SF Representation format - “~” Note that the Diallable Digits format with the 0-9 characters shall be supported by the switching function.

© ISO/IEC 2007 – All rights reserved

Copyright International Organization for Standardization
Provided by IHS under license with ISO
No reproduction or networking permitted without license from IHS
Not for Resale

Table 13-9 Get Switching Function Capabilities—Positive Acknowledgement (continued)

Parameter Name	Type	M/ O/C	Description
swDomainFeatures	Bitmap	M	Specifies which features are supported by the switching function. If a bit is TRUE, then the specified feature is supported. The following is the list of possible features (multiple bits can be set): Forwarding Call Associated models: • Is (Immediate) Forwarding triggered before the call is logically delivered to the device? • Is (Immediate) Forwarding triggered after the call is logically delivered to the device? Level of Forwarding Default Settings: • Switching function default setting - allows activation/deactivation of a single switching function forwarding type/forwarding destination combination. • User specified settings - allows the setting of individual forwarding types and forwarding destinations. • User specified setting (default forwarding type) - If this is TRUE, when the forwarding type is omitted in the Set Forward service, the switching function applies a default value, otherwise there is no default value applied. • User specified setting (default forward destination) - If this is TRUE, when the forward destination is omitted in the Set Forward service, the switching function applies a default value, otherwise there is no default value applied. Connection Failure: • Negative Acknowledgement • Support of Failed event with an associated failed connection • Support of Failed event without an associated failed connection • Support of Failed event with an associated failed connection, not reported via monitors on the failing device Other: • Recall • Call Back • External Calls—Incoming Calls • External Calls—Outgoing Calls • Prompting
swAppearanceAddressability	Bitmap	M	Specifies what types of appearance addressability is available within the switching sub-domain. The following is the list of bits (multiple bits can be set): • addressable • non-addressable

© ISO/IEC 2007 – All rights reserved

Copyright International Organization for Standardization
Provided by IHS under license with ISO
No reproduction or networking permitted without license from IHS
Not for Resale

Table 13-9 Get Switching Function Capabilities—Positive Acknowledgement (continued)

Parameter Name	Type	M/ O/C	Description
swAppearanceTypes	Bitmap	M	Specifies what types of appearances are available within the switching sub-domain The following is the list of bits (multiple bits can be set): • Selected-Standard • Basic-Standard • Basic-Bridged • Exclusive-Bridged • Independent-Shared-Bridged • Interdependent-Shared-Bridged
ignoreUnsupportedParameters	Enumerated	M	Specifies how the switching function handles unsupported optional parameters in service requests. The complete set of possible values is: • Ignore parameters - This indicates that the switching function treats unsupported optional parameters as if they were not present. • Reject Request - This indicates that the switching function returns a negative acknowledgement in response to any requests that contain unsupported optional parameters.
callCharacteristicsSupported	Bitmap	C	Specifies the characteristics that the switching function reports via the callCharacteristics parameter. If a bit is TRUE then the specified characteristic is reported. The following is the list of bits (multiple bits may be set): • acdCall • priorityCall • maintenanceCall • directAgent • assistCall • voiceUnitCall • privateCall • personalCall • sensitiveCall • confidentialCall • encryptedCall This parameter shall be provided if the switching function characterizes calls via the callCharacteristics parameter.

© ISO/IEC 2007 – All rights reserved

Copyright International Organization for Standardization
Provided by IHS under license with ISO
No reproduction or networking permitted without license from IHS
Not for Resale

Table 13-9 Get Switching Function Capabilities—Positive Acknowledgement (continued)

Parameter Name	Type	M/ O/C	Description
mediaClassSupport	Bitmap	O	Specifies the media class of calls the switching sub-domain can support. If a bit is TRUE then the specified type of call can be present within the switching function. The following is the list of bits (multiple bits may be set): • Audio • Data • Image • Voice • Other • Chat • Email • Message • IM • SMS • MMS If this parameter is not present, then the switching function only supports voice calls.
numberOfChannels	Value	O	Specifies the highest number of available channels at a given device within the switching sub-domain. If the parameter is not present, the number of channels at a device is not known but is one or greater.
maxChannelBind	Value	O	Specifies the highest maximum number of channels that can be associated with a given connection at a device within the switching sub-domain. If the parameter is not present, the maximum number of channels per connection is one.
miscMediaCallCharacteristics	Bitmap	O	Specifies the media call characteristics supported. If a bit is TRUE then the specified feature is present within the switching function. The following is the list of bits (multiple bits can be set) • Does the switching function support the adjustment of the media characteristics when a call is being made?
connectionRateList	List of Values	O	Specifies the list of connection rates that are supported for the given switching function.
delayToleranceRateList	List of Values	O	Specifies the list of delay tolerances that are supported for the given switching function.
pauseTime	Value (1..2000)	O	Specifies the amount time that a pause (as specified by the comma “,” character in the Diallable Digits Device Identifier format) within a dialling sequence will last for in the switching function. This time is specified in milliseconds. If this parameter is not present, then the pause time is not known for the switching function.
currentTime	TimeInfo	O	Specifies the current date and time of the switching function.

© ISO/IEC 2007 – All rights reserved

Copyright International Organization for Standardization
Provided by IHS under license with ISO
No reproduction or networking permitted without license from IHS
Not for Resale

Table 13-9 Get Switching Function Capabilities—Positive Acknowledgement (continued)

Parameter Name	Type	M/ O/C	Description
messageSeqNumbers	Bitmap	C	Specifies if the switching function supports message sequence numbers (via the security parameter) on services and events. If a bit is TRUE, then it is supported. The following is the list of bits (multiple bits may be set): • allEvents - message sequence number is provided on all events from the switching function. • allAcks - message sequence number is provided on all (positive and negative) acknowledgements from the switching function. • allServReqs - message sequence number is provided on all service requests from the switching function. This parameter shall be provided if the switching function provides message sequence number information.
timeStampMode	Bitmap	C	Specifies when the switching function provides timestamp information (via the security parameter). If a bit is TRUE, then the mode is supported. The following is the list of bits (multiple bits may be set): • allEvents - timestamp parameter is provided on all events from the switching function. • allAcks - timestamp parameter is provided on all (positive and negative) acknowledgements from the switching function. • allServReqs - timestamp parameter is provided on all service requests from the switching function. This parameter shall be provided if the switching function provides timestamp information.
securityMode	Enumerated	C	Specifies when the switching function provides securityInfo (via the security parameter). The following is the list of bits (multiple bits may be set): • allEvents - securityInfo is provided on all events from the switching function. • allAcks - securityInfo is provided on all (positive and negative) acknowledgements from the switching function. • allServReqs - securityInfo is provided on all service requests from the switching function. This parameter shall be provided if the switching function provides securityInfo via the security parameter.

© ISO/IEC 2007 – All rights reserved

Copyright International Organization for Standardization
Provided by IHS under license with ISO
No reproduction or networking permitted without license from IHS
Not for Resale

Table 13-9 Get Switching Function Capabilities—Positive Acknowledgement (continued)

Parameter Name	Type	M/ O/C	Description
securityFormat	Bitmap	C	Specifies the format(s) of the securityInfo information (in the security parameter) supported by the switching function. The following is the list of bits (multiple bits may be set): • octetStringFromSF - the switching function provides securityData in the octetString format • otherTypeFromSF - the switching function provides securityData in another format. • octetStringToSF - the switching function supports receiving securityData in the octetString format • otherTypeToSF - the switching function supports receiving securityData in another format. This parameter shall be provided if the switching function supports sending or receiving securityInfo in the security parameter.
privateDataFormat	Bitmap	C	Specifies the format(s) of the privateData information supported by the switching function. The following is the list of bits (multiple bits may be set): • octetStringFromSF - the switching function provides privateData in the octetString format • otherTypeFromSF - the switching function provides privateData in another format. • octetStringToSF - the switching function supports receiving privateData in the octetString format • otherTypeToSF - the switching function supports receiving privateData in another format. This parameter shall be provided if the switching function supports sending or receiving privateData.
transAndConfSetup	Bitmap	O	Specifies the different ways that the switching function can set up for a conference and/or transfer. (Note that if this parameter is not present, then the switching function can only set up transfers and conferences through the Consultation Call service.) If the bit is TRUE, then the specified way to setup a conference or transfer is supported by at least one device in the switching sub-domain. The following is the list is of bits (multiple bits may be set): • Consultation Call • Hold Call - Make Call • Alternate Call • two calls in the initial state of Hold • two calls in the initial state of Connected

© ISO/IEC 2007 – All rights reserved

Copyright International Organization for Standardization
Provided by IHS under license with ISO
No reproduction or networking permitted without license from IHS
Not for Resale

Table 13-9 Get Switching Function Capabilities—Positive Acknowledgement (continued)

Parameter Name	Type	M/ O/C	Description
deviceOnDeviceMonitorFilter	MonitorFilter	C	Specifies the complete monitorFilter parameter that is supported by the switching function when the monitorObject is a device and the monitorType is a device. Each bitmap entry represents an event that is supported by at least one of the devices in the switching function. This parameter shall be provided if this form of device-type monitoring is supported by at least one of the devices in the switching function, otherwise it shall not be provided.
deviceOnConnectionMonitorFilter	MonitorFilter	C	Specifies the complete monitorFilter parameter that is supported by the switching function when the monitorObject is a connection and the monitorType is a device. Each bitmap entry represents an event that is supported by at least one of the devices in the switching function. This parameter shall be provided if this form of device-type monitoring is supported by at least one of the devices in the switching function, otherwise it shall not be provided.
callOnDeviceMonitorFilter	MonitorFilter	C	Specifies the complete monitorFilter parameter that is supported by the switching function when the monitorObject is a device and the monitorType is a call. Each bitmap entry represents an event that is supported by at least one of the devices in the switching function. This parameter shall be provided if this form of call-type monitoring is supported by at least one of the devices in the switching function, otherwise it shall not be provided.
callOnConnectionMonitorFilter	MonitorFilter	C	Specifies the complete monitorFilter parameter that is supported by the switching function when the monitorObject is a connection and the monitorType is a call. Each bitmap entry represents an event that is supported by at least one of the devices in the switching function. This parameter shall be provided if this form of call-type monitoring is supported in the switching function, otherwise it shall not be provided.

© ISO/IEC 2007 – All rights reserved

Copyright International Organization for Standardization
Provided by IHS under license with ISO
No reproduction or networking permitted without license from IHS
Not for Resale

Table 13-9 Get Switching Function Capabilities—Positive Acknowledgement (continued)

Parameter Name	Type	M/ O/C	Description
miscMonitorCaps	Bitmap	O	Specifies the special types of monitoring capabilities that are present within the switching sub-domain. If a bit is TRUE then the monitoring capability is present within the switching sub-domain. The following is the list of bits (multiple bits may be set): • Group Inclusive Model - the scope of the monitor on a group device includes the distribution mechanism and all member devices. This bit applies to group devices that include a distribution mechanism (e.g. Hunt and ACD groups). • Group Exclusive Model - the scope of the monitor on the group device includes only the distribution mechanism. This bit applies to group devices that include a distribution mechanism (e.g. Hunt and ACD groups). • Monitor the physical element to report call control events for all appearances associated with a device. (This capability is valid only if an appearanceType of any form of a bridge appearance is supported.) • ACD Device Inclusive - the scope of the monitor on an ACD device includes both the ACD device and the distributed-to devices (including ACD groups). (This capability is valid only for ACD devices). • ACD Device Exclusive - the scope of the monitor on an ACD device only the ACD device. (This capability is valid only for ACD devices). If this parameter is not present, then the monitoring considerations are not known.
correlatorDataSupported	Boolean	O	Specifies if the switching function supports the correlatorData parameter on service requests and events. The complete set of possible values is: • TRUE - Option supported. • FALSE - Option is not supported. Refer to See “Correlator Data” on page 43. for the required events that shall support correlator data if this option is supported.
dynamicFeatureSupported	Enumerated	O	Specifies how the switching function provides the servicesPermitted parameter on events. The complete set of possible values is: • none - servicesPermitted not provided on any events • all - servicesPermitted provided on all events where it is specified • some - servicesPermitted provided on some events. Refer to the logDevEvtsList parameter for the events that support the parameter.

© ISO/IEC 2007 – All rights reserved

Copyright International Organization for Standardization
Provided by IHS under license with ISO
No reproduction or networking permitted without license from IHS
Not for Resale

Table 13-9 Get Switching Function Capabilities—Positive Acknowledgement (continued)

Parameter Name	Type	M/ O/C	Description
callLinkageOptions	Bitmap	O	Specifies if the switching function supports the call linkage and thread linkage features. The complete set of possible values is: • callLinkageFeatureSupported - the switching function supports the call linkage feature. This feature shall be supported if the thread linkage feature is supported. • threadLinkageFeatureSupported - the switching function supports the thread linkage feature. Refer to 6.1.2.7, “Call Linkage”, on page 47.
acdModels	Bitmap	O	Specifies the types of ACD models that are supported by the switching function. If a bit is TRUE, then the specified ACD model is supported by the switching function. The following is the list of bits (multiple bits may be set): • Visible ACD-Related Devices • Non-Visible ACD-Related Devices Note that if more than one type of ACD model is present in the switching function, then the Get Logical Device Information service shall be used to determine the particular ACD models supported by for each ACD device or ACD group by the switching function.
agentLogOnModels	Bitmap	O	Specifies the types of agent log on models that are supported by the switching function. If a bit is TRUE, then the specified agent log on model is supported by the switching function. The following is the list of bits (multiple bits may be set): • Log On to an ACD device • Log On to an ACD Group (explicit/one step) • Log On to an ACD Group (explicit/two steps) • Log On to an ACD Group (implicit/one step) Note that if more than one type of model is present in the switching function, then the Get Logical Device Information service shall be used to determine the particular Log On models supported for each device which is or can be associated with an agent.

© ISO/IEC 2007 – All rights reserved

Copyright International Organization for Standardization
Provided by IHS under license with ISO
No reproduction or networking permitted without license from IHS
Not for Resale

Table 13-9 Get Switching Function Capabilities—Positive Acknowledgement (continued)

Parameter Name	Type	M/ O/C	Description
agentStateModels	Bitmap	O	Specifies the types of agent models that are supported by the switching function. If a bit is TRUE, then the specified agent model is supported by the switching function. The following is the list of bits (multiple bits may be set): • Agent Multi-State Model • Agent Multi-State Model (Semi-Independent Linked) • Agent Oriented Model Note that if more than one type of model is present in the switching function, then the Get Logical Device Information service shall be used to determine the particular Agent models supported for each ACD device or ACD group by the switching function.
connectionView	Enumerated	M	Specifies the meaning of the primary and secondary old call parameters in the Conferenced and Transferred events. The complete set of possible values is: • fixed view - the contents of the primary and secondary old call parameters are independent of the monitoring type and the role of the device in the conference or transfer. • local view - the contents of the primary and secondary old call parameters are dependent upon which device is being monitored. Refer to the descriptions of the Conferenced and the Transferred events for more information.

© ISO/IEC 2007 – All rights reserved

Copyright International Organization for Standardization
Provided by IHS under license with ISO
No reproduction or networking permitted without license from IHS
Not for Resale

Table 13-9 Get Switching Function Capabilities—Positive Acknowledgement (continued)

Parameter Name	Type	M/ O/C	Description
maxLengthParameters	List of Values	M	Each value is the switching function's maximum length (in characters) for the corresponding parameters and parameter types. The computing function should not send larger data or the service request will be rejected. The following list provides the different parameters and parameter types for which a maximum value is provided. The number in parenthesis, where included, specifies the maximum possible length. • AccountInfo parameter type • AuthCode parameter type • AgentID parameter type • AgentPassword parameter type: • callID in the ConnectionID parameter type • CorrelatorData parameter type • CSTAPrivateData parameter type • Device Identifiers parameter types • UserData parameter type • buttonLabel parameters: • lampLabel parameters: • charactersToSend parameter: (64) If any of the above values is zero, then the parameter or parameter type is not supported.
maxLengthParametersContinued	List of Values	O	Each value is the switching function's maximum length (in characters) for the corresponding parameters and parameter types. The computing function should not send larger data or the service request will be rejected. The following list provides the different parameters and parameter types for which a maximum value is provided. • MonitorCrossRefID parameter type • CallQualifyingData parameter type • subDomainCallLinkageID from CallLinkageData • subDomainThreadID from CallLinkageData • ioData parameters • MessageInfo parameter type If any of the above values is zero, then the parameter or parameter type is not supported.

© ISO/IEC 2007 – All rights reserved

Copyright International Organization for Standardization
Provided by IHS under license with ISO
No reproduction or networking permitted without license from IHS
Not for Resale

Table 13-9 Get Switching Function Capabilities—Positive Acknowledgement (continued)

Parameter Name	Type	M/ O/C	Description
servEvtsList	List	C	Specifies a list of capability bitmap parameter types corresponding to categories of services. Each bitmap entry in the lists represents a service or event that is supported by the switching function. This includes the following categories of services/events: • capExchangeServList (O) CapExchangeServList • systemStatusServList (O) SystemStatusServList • monitoringServList (O) MonitoringServList • snapshotServList (O) SnapshotServList • callControlServList (O) CallControlServList • callControlEvtsList (O) CallControlEvtsList • callAssociatedServList (O) CallAssociatedServList • callAssociatedEvtsList (O) CallAssociatedEvtsList • mediaServList (O) MediaServList • mediaEvtsList (O) MediaEvtsList • routeingServList (O) RouteingServList • physServList (O) PhysServList • physEvtsList (O) PhysEvtsList • logicalServList (O) LogicalServList • logicalEvtsList (O) LogicalEvtsList • deviceMaintEvtsList (O) DeviceMaintEvtsLis • ioServicesServList (O) IOServicesServList • dataCollectionServList (O) DataCollectionServList • voiceServList (O) VoiceServList • voiceEvtsList (O) VoiceEvtsList • cdrServList (O) CDRServList • vendorSpecificServList (O) VendorSpecificServList • vendorSpecificEvtsList (O) VendorSpecificEvtsList This parameter shall be provided if the switching function supports any of these categories of services/events. If a list entry is not included in the list, then the corresponding category of services/events is not supported by the switching function. The bitmap parameter types are described in Annex C.
privateDataVersionList	List of Values	O	If the switching function supports the private data mechanism, this parameter provides the list of supported private data versions associated with the switching function manufacturer (manufacturerName).

© ISO/IEC 2007 – All rights reserved

Copyright International Organization for Standardization
Provided by IHS under license with ISO
No reproduction or networking permitted without license from IHS
Not for Resale

Table 13-9 Get Switching Function Capabilities—Positive Acknowledgement (continued)

Parameter Name	Type	M/ O/C	Description
systemStatusTimer	Value	C	Specifies a timer value indicating how often the switching function sends periodic system status requests to the computing function (i.e. heartbeats). This parameter has a value between 0 and 180 seconds. 0 means that the switching function does not send periodic System Status service requests. This parameter shall be provided if the switching function supports the heartbeat timer via the System Status service.
simpleThreshold	Value	O	Specifies the number of unacknowledged service requests that are allowed at any time for the switching function. 0 means there is no limit. If this parameter is not provided, the simpleThreshold is unknown.
filterThreshold	List of Values	O	Specifies a list of values representing the number of outstanding service requests, for every service defined in this specification, that are allowed at any time for each service. 0 means there is no limit. If this parameter is not provided, the filterThreshold is unknown.

--`,,```,,,,````-`-`,,`,,`,`,,`---
© ISO/IEC 2007 – All rights reserved
Copyright International Organization for Standardization
Provided by IHS under license with ISO
No reproduction or networking permitted without license from IHS
Not for Resale

Table 13-9 Get Switching Function Capabilities—Positive Acknowledgement (continued)

Parameter Name	Type	M/ O/C	Description

mediaServiceCapsList	List of Structures	C	Specifies a list of structures of the media service types, version, media service instances, connection modes supported across the entire switching function. This parameter is a list, each element of which contains the following:
			• mediaServiceType (M) MediaServiceType - A media service type used to identify the media service.
			• mediaSeviceVersion (O) Value - The version of the media service.
			• mediaServiceInstance (O) MediaServiceInstanceID - A media service instance associated with the media service.
			• connectionModeBMap (O) Bitmap - The media service connection modes supported for the media service type, version and instance. The following is the list of bits (multiple bits may be set):
			  • consultationConference
			  • consultationConferenceHold
			  • deflect
			  • directedPickup
			  • join
			  • singleStepConference
			  • singleStepConferenceHold
			  • singleStepTransfer
			  • transfer
			  • direct
			• mediaStreamIDSupported (M) Boolean - Specifies if the mediaStreamID is supported for the combination of media service type, version, and instance. The complete set of values is:
			  • TRUE - indicates that the switching function shall provide the conditional mediaStreamID parameter where specified.
			  • FALSE - indicates that the conditional mediaStreamID is not provided.
			This parameter shall be provided if media access is supported by at least one of the devices in the switching function, otherwise it shall not be provided.

maxDeviceHistoryEntries	Value	O	Specifies maximum number of entries supported by the switching function in the DeviceHistory parameter.
security	CSTASecurityData	O	Specifies timestamp information, message sequence number, and security information.
privateData	CSTAPrivateData	O	Specifies non-standardized information.

© ISO/IEC 2007 – All rights reserved

Copyright International Organization for Standardization
Provided by IHS under license with ISO
No reproduction or networking permitted without license from IHS
Not for Resale

13.1.4.2.2 Negative Acknowledgement

The negative acknowledgement error codes are described in 12.2.14, “ErrorValue”, on page 115.

13.1.4.3 Operational Model

13.1.4.3.1 Connection State Transitions

There are no connection state changes as the result of this service.

13.1.4.3.2 Device-Type Monitoring Event Sequences

There are no events generated as a result of this service.

13.1.4.3.3 Call-Type Monitoring Event Sequences

There are no events generated as a result of this service.

13.1.5 Get Switching Function Devices C → S

The Get Switching Function Devices service is used by the computing function to obtain the current set of devices in the application working domain along with their associated device categories and associated device names.

13.1.5.1 Service Request

Table 13-10 Get Switching Function Devices—Service Request

Parameter Name	Type	M/ O/C	Description
requestedDeviceID	DeviceID	O	Specifies the device identifier of the device being queried. If this parameter is not present, the switching function returns a list of all devices (of the requestedDeviceCategory, if that parameter is provided) in the switching sub-domain.

--`,,```,,,,````-`-`,,`,,`,`,,`---
© ISO/IEC 2007 – All rights reserved
Copyright International Organization for Standardization
Provided by IHS under license with ISO
No reproduction or networking permitted without license from IHS
Not for Resale

Table 13-10 Get Switching Function Devices—Service Request (continued)

Parameter Name	Type	M/ O/C	Description
requestedDeviceCategory	Enumerated	O	Specifies that only devices of the requested category be provided. If this parameter is not present, the switching function will return a list of all devices (or just the requested device) in the switching function. The complete set of possible values is: • ACD • Group (ACD) • Group (Hunt) • Group (Pick) • Group (User) • Group (Agent) • Group (Other) • Network Interface • Park • Routeing Device • Station • Voice Unit • Generic Interactive Voice • Listener Interactive Voice • DTMF Interactive Voice • Prompt Interactive Voice • Prompt Queue Interactive Voice • Message Interactive Voice • Other
security	CSTASecurityData	O	Specifies timestamp information, message sequence number, and security information.
privateData	CSTAPrivateData	O	Specifies non-standardized information.

13.1.5.2 Service Response

This service follows the multi-step acknowledgement model for this service request.

13.1.5.2.1 Positive Acknowledgement

The positive acknowledgement for the Get Switching Function Devices service indicates that one or more Switching Function Devices services will subsequently be generated by the switching function.

The computing function shall associate subsequent Switching Function Devices services to the original Get Switching Function Devices service by means of the serviceCrossRefID parameter.

Table 13-11 Get Switching Function Devices—Positive Acknowledgement

Parameter Name	Type	M/ O/C	Description
serviceCrossRefID	ServiceCrossRefID	M	Specifies the correlator used to associate subsequent Switching Function Devices services to this service request.

© ISO/IEC 2007 – All rights reserved

Copyright International Organization for Standardization
Provided by IHS under license with ISO
No reproduction or networking permitted without license from IHS
Not for Resale

Table 13-11 Get Switching Function Devices—Positive Acknowledgement (continued)

Parameter Name	Type	M/ O/C	Description
security	CSTASecurityData	O	Specifies timestamp information, message sequence number, and security information.
privateData	CSTAPrivateData	O	Specifies non-standardized information.

13.1.5.2.2 Negative Acknowledgement

The negative acknowledgement error codes are described in 12.2.14, “ErrorValue”, on page 115.

13.1.5.3 Operational Model

13.1.5.3.1 Connection State Transitions

There are no connection state changes as the result of this service.

13.1.5.3.2 Device-Type Monitoring Event Sequences

There are no events generated as a result of this service.

13.1.5.3.3 Call-Type Monitoring Event Sequences

There are no events generated as a result of this service.

13.1.5.3.4 Functional Requirements

1. Due to the nature of the switching function configuration, there may be a significant time interval between the generation of the positive acknowledgement for this service and the generation of the first Switching Function Devices service (or between a sequence of Switching Function Device services).
2. If there are no devices that meet the conditions in the service request, the switching function provides a Positive Acknowledgement to the Get Switching Function Devices service request followed by a Switching Function Devices service that includes the deviceList parameter with no devices.
3. The Switching Function Devices service returns all device identifiers that refer to all devices in the application working domain (i.e devices that can be controlled and/or observed).

13.1.6 Switching Function Devices

S → C

The Switching Function Devices service is used by the switching function to provide a list of devices in the application working domain. This service is generated as a result of the Get Switching Function Devices service.

The switching function may generate a sequence of Switching Function Devices services, individually referred to as segments, in response to a single Get Switching Function Devices service request.

© ISO/IEC 2007 – All rights reserved

Copyright International Organization for Standardization
Provided by IHS under license with ISO
No reproduction or networking permitted without license from IHS
Not for Resale

13.1.6.1 Service Request

Table 13-12 Switching Function Devices—Service Request

Parameter Name	Type	M/ O/C	Description
serviceCrossRefID	ServiceCrossRefID	M	Specifies the cross reference used to associate the Switching Function Devices service request to the Get Switching Function Devices service request.
segmentID	Value	O	Specifies the segment number of this message. Each successive segment number in the sequence increments the segmentID by one.
lastSegment	Boolean	M	Specifies if this segment is the last one associated with the serviceCrossRefID. The complete set of possible values is: • TRUE - Indicates that this is the last segment. • FALSE - Indicates that this is not the last segment in the sequence.

© ISO/IEC 2007 – All rights reserved

Copyright International Organization for Standardization
Provided by IHS under license with ISO
No reproduction or networking permitted without license from IHS
Not for Resale

Table 13-12 Switching Function Devices—Service Request (continued)

Parameter Name	Type	M/ O/C	Description

deviceList	List of Structures	M	Specifies the list of device Identifiers representing the devices that can be controlled and/or observed. It includes the following components for each device in the list:
			• deviceID (M) DeviceID - Specifies a Device Identifier associated with the entry in the list.
			• deviceCategory (O) Enumerated - Specifies the device category associated with the entry in the list. The complete set of possible values is:
			  • ACD
			  • Group
			  • Network Interface (e.g. trunk, CO Line)
			  • Park
			  • Routeing
			  • Station (default)
			  • Voice Unit
			  • Generic Interactive Voice
			  • Listener Interactive Voice
			  • DTMF Interactive Voice
			  • Prompt Interactive Voice
			  • Prompt Queue Interactive Voice
			  • Message Interactive Voice
			  • Other
			• namedDeviceTypes (O) Enumerated - indicates the named device type associated with the device in the service request. The complete set of possible values is:
			  • ACD
			  • ACD Group
			  • Button
			  • Button Group
			  • Conference Bridge
			  • Line
			  • Line Group
			  • Operator
			  • Operator Group
			  • Parking Device
			  • Station
			  • Station Group
			  • Trunk
			  • Trunk Group
			  • Other
			  • Other Group

© ISO/IEC 2007 – All rights reserved
--`,,```,,,,````-`-`,,`,,`,`,,`---
Copyright International Organization for Standardization
Provided by IHS under license with ISO
No reproduction or networking permitted without license from IHS
Not for Resale

Table 13-12 Switching Function Devices—Service Request (continued)

Parameter Name	Type	M/ O/C	Description

(continued)	(continued)		• deviceAttributes (O) Bitmap - Specifies additional attributes of the device associated with the entry in the list. This is a bit list of the following set of possible values (multiple bits may be set):
			  • mediaAccessDevice - indicates that the device is also a media access device
			  • routeingDevice - indicates that the device is also a routeing device
			  • Group (ACD) - indicates that the Group device has an ACD attribute (e.g. is an ACD Group)
			  • Group (Hunt) - indicates that the Group device has a Hunt attribute
			  • Group (Pick) - indicates that the Group device has a Pick attribute
			  • Group (User) - indicates that the Group device has a User attribute
			  • Group (Agent) - Indicates that the Group device has an Agent attribute
			• deviceModelName (O) Characters - Specifies the switching function specific model name associated with the entry in the list.
			• nidGroup (O) DeviceID - Specifies the NID Group (trunk group, for example) that is associated with the NID. This component may only be provided when the deviceCategory is Network Interface.

security	CSTASecurityData	O	Specifies timestamp information, message sequence number, and security information.
privateData	CSTAPrivateData	O	Specifies non-standardized information.

13.1.6.2 Service Response

There are no service request completion conditions associated with this service.

13.1.6.2.1 Positive Acknowledgement

There is no positive acknowledgement associated with this service request.

13.1.6.2.2 Negative Acknowledgement

The negative acknowledgement error codes are described in 12.2.14, “ErrorValue”, on page 115.

13.1.6.3 Operational Model

13.1.6.3.1 Connection State Transitions

There are no connection state changes as the result of this service.

13.1.6.3.2 Device-Type Monitoring Event Sequences

There are no events generated as a result of this service.

© ISO/IEC 2007 – All rights reserved

Copyright International Organization for Standardization
Provided by IHS under license with ISO
No reproduction or networking permitted without license from IHS
Not for Resale

13.1.6.3.3 Call-Type Monitoring Event Sequences

There are no events generated as a result of this service.

13.1.6.3.4 Functional Requirements

1. Due to the nature of the switching function configuration, the switching function may buffer the Switching Function Devices messages to the computing function. The time between these messages may vary significantly between various implementations.
2. The deviceList parameter may be provided without any devices in the list by providing a single entry in deviceList with a null formatted deviceID (a deviceID with 0 characters). This could occur when there are no devices that meet the conditions provided in the Get Switching Function Devices service request.
3. The Switching Function Devices service returns all device identifiers that refer to all devices in the application working domain (i.e. devices that can be controlled and/or observed).

14 System Services

This clause consists of:

- System Registration services
- System services

NOTE This clause describes System Services between the Switching Function and the Computing Function.

14.1 Registration Services

Table 14-1 System Registration Services Summary

System Registration Service	Description	Pg.
14.1.1 Change System Status Filter	Changes the system status filter options for a current system registration.	186
14.1.2 System Register	Registers the computing function for system services with the switching function.	188
14.1.3 System Register Abort	Indicates that the switching function has terminated a system registration.	190
14.1.4 System Register Cancel	Unregisters the computing function for system services with the switching function.	191

14.1.1 Change System Status Filter C → S

The Change System Status Filter service is used by the computing function to change the filter options for a current system registration.

© ISO/IEC 2007 – All rights reserved

Copyright International Organization for Standardization
Provided by IHS under license with ISO
No reproduction or networking permitted without license from IHS Not for Resale

14.1.1.1 Service Request

Table 14-2 Change System Filter—Service Request

Parameter Name	Type	M/ O/C	Description
sysStatRegisterID	SysStatRegisterID	M	Specifies the system registration identifier for which the status filter should be changed.
requestedStatusFilter	Bitmap	M	Specifies the requested System Status Types to be filtered (not sent) by the switching function. This parameter is a bitmap of the following values: • Initializing • Enabled • Normal • Messages Lost • Disabled • Partially Disabled • Overload Imminent • Overload Reached • Overload Relieved Multiple bits may be set.
security	CSTASecurityData	O	Specifies timestamp information, message sequence number, and security information.
privateData	CSTAPrivateData	O	Specifies non-standardized information.

14.1.1.2 Service Response

This service follows the atomic acknowledgement model for this service request.

14.1.1.2.1 Positive Acknowledgement

Table 14-3 Change System Status Filter—Positive Acknowledgement

Parameter Name	Type	M/ O/C	Description
actualStatusFilter	Bitmap	M	Specifies the actual set of System Status Types that will be filtered (not sent) by the switching function. This parameter is a bitmap with the same set of possible values as in the service request. The actualStatusFilter may differ from the requestedStatusFilter parameter in the service request (See Functional Requirement #2).
security	CSTASecurityData	O	Specifies timestamp information, message sequence number, and security information.
privateData	CSTAPrivateData	O	Specifies non-standardized information.

14.1.1.2.2 Negative Acknowledgement

The negative acknowledgement error codes are described in 12.2.14, “ErrorValue”, on page 115.

© ISO/IEC 2007 – All rights reserved

Copyright International Organization for Standardization
Provided by IHS under license with ISO
No reproduction or networking permitted without license from IHS
Not for Resale

14.1.1.3 Operational Model

14.1.1.3.1 Connection State Transitions

There are no connection state changes due to this service.

14.1.1.3.2 Device-Type Monitoring Event Sequences

There are no events generated as a result of this service.

14.1.1.3.3 Call-Type Monitoring Event Sequences

There are no events generated as a result of this service.

14.1.1.3.4 Functional Requirements

1. The requestedStatusFilter parameter allows the computing function to choose the System Status Types for which no System Status service requests should be issued by the switching function. This parameter only applies to the System Status service. If the System Status service has not been requested for this system registration, then the switching function shall send a negative acknowledgement to the Change System Status Filter service request.
2. An implementation that does not support all System Status Types will nevertheless accept the Change System Status Filter service even if the requested filter cannot be provided. The service acknowledgement indicates the actual set of System Status Types that will be filtered. This means that the actual set of filtered types returned in the positive acknowledgement may include additional types to be filtered (or fewer types generated by the switching function) than those requested in the service request.

14.1.2 System Register

C → S

The System Register service is used by the computing function to register to receive system services from the switching function. The computing function may be required to register for system services before it can receive any system service requests from the switching function.

14.1.2.1 Service Request

Table 14-4 System Register—Service Request

Parameter Name	Type	M/ O/C	Description
requestTypes	Bitmap	M	Specifies the system services that are being registered. This parameter is a bitmap of the following values: • System Status • Request System Status • Switching Function Capabilities Changed • Switching Function Devices Changed Multiple bits may be set.

© ISO/IEC 2007 – All rights reserved

Copyright International Organization for Standardization
Provided by IHS under license with ISO
No reproduction or networking permitted without license from IHS
Not for Resale

Table 14-4 System Register—Service Request (continued)

Parameter Name	Type	M/ O/C	Description
requestedStatusFilter	Bitmap	C	Specifies the requested set of System Status Types to be filtered (not sent) by the switching function. This parameter is a bitmap of the following values: • Initializing • Enabled • Normal • Messages Lost • Disabled • Partially Disabled • Overload Imminent • Overload Reached • Overload Relieved Multiple bits may be set. This parameter is mandatory if the requestTypes parameter includes System Status, otherwise it shall not be provided.
security	CSTASecurityData	O	Specifies timestamp information, message sequence number, and security information.
privateData	CSTAPrivateData	O	Specifies non-standardized information.

14.1.2.2 Service Response

This service follows the atomic acknowledgement model for this service request.

14.1.2.2.1 Positive Acknowledgement

Table 14-5 System Register—Positive Acknowledgement

Parameter Name	Type	M/ O/C	Description
sysStatRegisterID	SysStatRegisterID	M	Specifies the system registration identifier for this registration.
actualStatusFilter	Bitmap	C	Specifies the actual set of System Status Types that will be filtered (not sent) by the switching function. This parameter is a bitmap with the same set of possible values as in the service request. The actual types filtered may differ from what was requested in the service request (See Functional Requirement #5). If the requestType parameter in the service request includes System Status, then this parameter is mandatory, otherwise it shall not be provided.
security	CSTASecurityData	O	Specifies timestamp information, message sequence number, and security information.
privateData	CSTAPrivateData	O	Specifies non-standardized information.

14.1.2.2.2 Negative Acknowledgement

The negative acknowledgement error codes are described in 12.2.14, “ErrorValue”, on page 115.

© ISO/IEC 2007 – All rights reserved

14.1.2.3 Operational Model

14.1.2.3.1 Connection State Transitions

There are no connection state changes due to this service.

14.1.2.3.2 Device-Type Monitoring Event Sequences

There are no events generated as a result of this service.

14.1.2.3.3 Call-Type Monitoring Event Sequences

There are no events generated as a result of this service.

14.1.2.3.4 Functional Requirements

1. The sysStatRegisterID parameter returned in the positive acknowledgement is used to identify the registration over which system services will be sent. The sysStatRegisterID is also used when cancelling the system registration.
2. The number of simultaneous system registrations allowed is switching function dependent. When the limit is reached, subsequent System Register service requests shall result in negative acknowledgements from the switching function.
3. The requestTypes parameter specifies which system services are to be issued by the switching function to the registering computing function.
4. The requestedStatusFilter parameter allows the computing function to choose the System Status Types for which no System Status service requests should be issued by the switching function. If the System Status service is not being requested (i.e., in the requestTypes parameter), then the actualStatusFilter parameter does not apply and shall not be provided. The actual system status filter is provided in the actualStatusFilter parameter in the positive acknowledgement.
5. An implementation that does not support all System Status Types will nevertheless accept the System Register service even if the requestedStatusFilter cannot be provided. The service acknowledgement indicates the actual set of System Status Types that will be filtered. This means that the actual set of filtered types returned in the positive acknowledgement may include additional types to be filtered (or fewer types generated by the switching function) than what was requested in the service request.
6. If explicit registration is not supported, all system services (e.g., System Status, Request System Status) and System Status Types (e.g., Initializing, Enabled) supported by the switching function shall be provided to the computing functions. Note that the computing function *shall* be prepared to respond to a System Status service request from the switching function in such cases (because it has no way of specifying that it should *not* receive such requests).
7. Note that if a computing function registers for system services it shall support the ability to respond to any switching function System Status service requests it may receive. In particular, for implicit registrations, a CSTA-conformant computing function shall always be able to support such requests from the switching function.

14.1.3 System Register Abort S ⟶ C

The System Register Abort service is used by the switching function to asynchronously cancel an active system registration. This service invalidates a current systems status registration. There is no positive acknowledgement defined for this service.

© ISO/IEC 2007 – All rights reserved

Copyright International Organization for Standardization
Provided by IHS under license with ISO
No reproduction or networking permitted without license from IHS Not for Resale

14.1.3.1 Service Request

Table 14-6 System Register Abort—Service Request

Parameter Name	Type	M/ O/C	Description
sysStatRegisterID	SysStatRegisterID	M	Specifies the system registration identifier for the system registration that was aborted.
security	CSTASecurityData	O	Specifies timestamp information, message sequence number, and security information.
privateData	CSTAPrivateData	O	Specifies non-standardized information.

14.1.3.2 Service Response

There are no service completion conditions for this service.

14.1.3.2.1 Positive Acknowledgement

There is no positive acknowledgement defined for this service.

14.1.3.2.2 Negative Acknowledgement

The negative acknowledgement error codes are described in 12.2.14, “ErrorValue”, on page 115.

14.1.3.3 Operational Model

14.1.3.3.1 Connection State Transitions

There are no connection state changes due to this service.

14.1.3.3.2 Device-Type Monitoring Event Sequences

There are no events generated as a result of this service.

14.1.3.3.3 Call-Type Monitoring Event Sequences

There are no events generated as a result of this service.

14.1.3.3.4 Functional Requirements

1. The switching function may issue this service at any time when it can no longer maintain the system registration.
2. The computing function may send a negative acknowledgement to this service request, but no positive acknowledgement is defined.

14.1.4 System Register Cancel

C ⟶ S

The System Register Cancel service is used to cancel a previous system registration. This request terminates the system registration and the computing function receives no further system service requests for that system registration once it receives the positive acknowledgement to the System Register Cancel request.

© ISO/IEC 2007 – All rights reserved

Copyright International Organization for Standardization
Provided by IHS under license with ISO
No reproduction or networking permitted without license from IHS
Not for Resale

14.1.4.1 Service Request

Table 14-7 System Register Cancel—Service Request

Parameter Name	Type	M/ O/C	Description
sysStatRegisterID	SysStatRegisterID	M	Specifies the system registration identifier for which the system registration is to be cancelled.
security	CSTASecurityData	O	Specifies timestamp information, message sequence number, and security information.
privateData	CSTAPrivateData	O	Specifies non-standardized information.

14.1.4.2 Service Response

This service follows the atomic acknowledgement model for this service request.

14.1.4.2.1 Positive Acknowledgement

Table 14-8 System Register Cancel—Positive Acknowledgement

Parameter Name	Type	M/ O/C	Description
security	CSTASecurityData	O	Specifies timestamp information, message sequence number, and security information.
privateData	CSTAPrivateData	O	Specifies non-standardized information.

14.1.4.2.2 Negative Acknowledgement

The negative acknowledgement error codes are described in 12.2.14, “ErrorValue”, on page 115.

14.1.4.3 Operational Model

14.1.4.3.1 Connection State Transitions

There are no connection state changes due to this service.

14.1.4.3.2 Device-Type Monitoring Event Sequences

There are no events generated as a result of this service.

14.1.4.3.3 Call-Type Monitoring Event Sequences

There are no events generated as a result of this service.

14.1.4.3.4 Functional Requirements

1. The computing function shall continue to process outstanding system requests from the switching function until it receives a positive acknowledgement for the System Register Cancel service request. The switching function shall not send any further system requests for a registration once it has sent the positive acknowledgement.

--`,,```,,,,````-`-`,,`,,`,`,,`---
© ISO/IEC 2007 – All rights reserved
Copyright International Organization for Standardization
Provided by IHS under license with ISO
No reproduction or networking permitted without license from IHS
Not for Resale

14.2 Services

Table 14-9 System Services Summary

System Service	Description	Pg.
14.2.1 Request System Status	Request to query the system status of the function receiving the request (bi-directional).	193
14.2.2 System Status	Request that reports the status of the function issuing the request to the function receiving the request (bi-directional). The indicated status may or may not have changed since the last System Status request was issued.	195
14.2.3 Switching Function Capabilities Changed	Request that reports that switching function level capability information (available via the Get Switching Function Capability service) has changed.	196
14.2.4 Switching Function Devices Changed	Request that reports that information associated with the current set of devices that can be controlled and observed in the switching sub-domain (available via the Get Switching Domain Devices service) has changed.	197

14.2.1 Request System Status

C ◄► S

The Request System Status service is used by the computing function or switching function to obtain (i.e., query) the system status of its peer function.

14.2.1.1 Service Request

Table 14-10 Request System Status—Service Request

Parameter Name	Type	M/ O/C	Description
sysStatRegisterID	SysStatRegisterID	C	Specifies the system registration identifier associated with the system registration for this request. This parameter is mandatory if the switching function is issuing the request and supports system registration, and shall not be provided otherwise.
security	CSTASecurityData	O	Specifies timestamp information, message sequence number, and security information.
privateData	CSTAPrivateData	O	Specifies non-standardized information.

14.2.1.2 Service Response

This service follows the atomic acknowledgement model for this service request.

© ISO/IEC 2007 – All rights reserved

Copyright International Organization for Standardization
Provided by IHS under license with ISO
No reproduction or networking permitted without license from IHS
Not for Resale

14.2.1.2.1 Positive Acknowledgement

Table 14-11 Request System Status—Positive Acknowledgement

Parameter Name	Type	M/ O/C	Description
systemStatus	Enumerated	M	Specifies the system status returned by the entity being queried. The complete set of possible values is: • Initializing • Enabled • Normal • Messages Lost • Disabled • Partially Disabled • Overload Imminent • Overload Reached • Overload Relieved See 12.2.25, “SystemStatus”, on page 136 for a description of these values.
security	CSTASecurityData	O	Specifies timestamp information, message sequence number, and security information.
privateData	CSTAPrivateData	O	Specifies non-standardized information.

14.2.1.2.2 Negative Acknowledgement

The negative acknowledgement error codes are described in 12.2.14, “ErrorValue”, on page 115.

14.2.1.3 Operational Model

14.2.1.3.1 Connection State Transitions

There are no connection state changes due to this service.

14.2.1.3.2 Device-Type Monitoring Event Sequences

There are no events generated as a result of this service.

14.2.1.3.3 Call-Type Monitoring Eve nt Sequences

There are no events generated as a result of this service.

14.2.1.3.4 Functional Requirements

1. The systemStatus parameter in the positive acknowledgement provides the requesting function with information regarding the state of the overall system of the responding function. This information is important for proper system operation and should be processed accordingly. If the responding function has informed the requesting function that an overload condition is imminent then the requesting function should attempt to decrease the overall traffic to the responding function.

--`,,```,,,,````-`-`,,`,,`,`,,`---
© ISO/IEC 2007 – All rights reserved
Copyright International Organization for Standardization
Provided by IHS under license with ISO
No reproduction or networking permitted without license from IHS
Not for Resale

14.2.2 System Status

C ◄► S

The System Status service is used by the computing function or switching function to report its system status to its peer function. The indicated status may or may not have changed since the last System Status request was issued. This service can also be used to implement a heartbeat mechanism between the two functions.

14.2.2.1 Service Request

Table 14-12 System Status—Service Request

Parameter Name	Type	M/ O/C	Description
sysStatRegisterID	SysStatRegisterID	C	Specifies the system registration identifier associated with the system registration for this request. This parameter is mandatory if the switching function is issuing the request and supports system registration, and shall not be provided otherwise.
systemStatus	Enumerated	M	Specifies the status of the function issuing the service request. The complete set of possible values is: • Initializing • Enabled • Normal • Messages Lost • Disabled • Partially Disabled • Overload Imminent • Overload Reached • Overload Relieved See 12.2.25, “SystemStatus”, on page 136 for a description of these values.
security	CSTASecurityData	O	Specifies timestamp information, message sequence number, and security information.
privateData	CSTAPrivateData	O	Specifies non-standardized information.

14.2.2.2 Service Response

This service follows the atomic acknowledgement model for this service request.

14.2.2.2.1 Positive Acknowledgement

Table 14-13 System Status—Positive Acknowledgement

Parameter Name	Type	M/ O/C	Description
security	CSTASecurityData	O	Specifies timestamp information, message sequence number, and security information.
privateData	CSTAPrivateData	O	Specifies non-standardized information.

14.2.2.2.2 Negative Acknowledgement

The negative acknowledgement error codes are described in 12.2.14, “ErrorValue”, on page 115.

© ISO/IEC 2007 – All rights reserved

Copyright International Organization for Standardization
Provided by IHS under license with ISO
No reproduction or networking permitted without license from IHS
Not for Resale

14.2.2.3 Operational Model

14.2.2.3.1 Connection State Transitions

There are no connection state changes due to this service.

14.2.2.3.2 Device-Type Monitoring Event Sequences

There are no events generated as a result of this service.

14.2.2.3.3 Call-Type Monitoring Event Sequences

There are no events generated as a result of this service.

14.2.2.3.4 Functional Requirements

1. The systemStatus parameter in the request provides the responding function with information regarding the state of the overall system of the requesting function. This information is important for proper system operation and should be processed accordingly. If the requesting function has informed the other function that an overload condition is imminent then the responding function should attempt to decrease the overall traffic to the requesting function.
2. The computing function can determine if the switching function uses the System Status service for periodic status reporting (i.e., heartbeats) using the capabilities exchange services. The Get Switching Function Capabilities service positive acknowledgement defines a parameter (systemStatusTimer) that is used to indicate whether periodic status reporting is used and if so, how often the computing function should expect the reports. The recovery action to be taken by the computing function in the event of a loss of heartbeats is implementation specific.

14.2.3 Switching Function Capabilities Changed S → C

The Switching Function Capabilities Changed service is used to indicate that switching function level capability information available via the Get Switching Function Capability service has changed.

The Get Switching Function Capability service may be used to obtain the revised information.

14.2.3.1 Service Request

Table 14-14 Switching Function Capabilities Changed—Service Request

Parameter Name	Type	M/ O/C	Description
sysStatRegisterID	SysStatRegisterID	C	Specifies the system registration identifier associated with the system registration for this request. This parameter is mandatory if the switching function supports system registration and shall not be provided otherwise.
security	CSTASecurityData	O	Specifies timestamp information, message sequence number, and security information.
privateData	CSTAPrivateData	O	Specifies non-standardized information.

14.2.3.2 Service Response

This service follows the atomic acknowledgement model for this service request.

© ISO/IEC 2007 – All rights reserved

Copyright International Organization for Standardization
Provided by IHS under license with ISO
No reproduction or networking permitted without license from IHS
Not for Resale

14.2.3.2.1 Positive Acknowledgement

Table 14-15 Switching Function Capabilities Changed—Positive Acknowledgement

Parameter Name	Type	M/ O/C	Description
security	CSTASecurityData	O	Specifies timestamp information, message sequence number, and security information.
privateData	CSTAPrivateData	O	Specifies non-standardized information.

14.2.3.2.2 Negative Acknowledgement

The negative acknowledgement error codes are described in 12.2.14, “ErrorValue”, on page 115.

14.2.3.3 Operational Model

14.2.3.3.1 Connection State Transitions

There are no connection state changes due to this service.

14.2.3.3.2 Device-Type Monitoring Event Sequences

There are no events generated as a result of this service.

14.2.3.3.3 Call-Type Monitoring Event Sequences

There are no events generated as a result of this service.

14.2.3.3.4 Functional Requirements

1. If supported by the switching function, the Switching Function Capabilities Changed service shall be sent whenever switching function level capability information has changed, whether or not the Get Switching Function Capabilities service has been previously issued.

14.2.4 Switching Function Devices Changed

S ⟶ C

The Switching Function Devices Changed service is used to indicate that information associated with the current set of devices that can be controlled and observed in the switching sub-domain has changed.

The Get Switching Function Devices service may be used to obtain the revised information.

14.2.4.1 Service Request

Table 14-16 Switching Function Devices Changed—Service Request

Parameter Name	Type	M/ O/C	Description
sysStatRegisterID	SysStatRegisterID	C	Specifies the system registration identifier associated with the system registration for this request. This parameter is mandatory if the switching function supports system registration and shall not be provided otherwise.
security	CSTASecurityData	O	Specifies timestamp information, message sequence number, and security information.
privateData	CSTAPrivateData	O	Specifies non-standardized information.

© ISO/IEC 2007 – All rights reserved

Copyright International Organization for Standardization
Provided by IHS under license with ISO
No reproduction or networking permitted without license from IHS
Not for Resale

14.2.4.2 Service Response

This service follows the atomic acknowledgement model for this service request.

14.2.4.2.1 Positive Acknowledgement

Table 14-17 Switching Function Devices Changed—Positive Acknowledgement

Parameter Name	Type	M/ O/C	Description
security	CSTASecurityData	O	Specifies timestamp information, message sequence number, and security information.
privateData	CSTAPrivateData	O	Specifies non-standardized information.

14.2.4.2.2 Negative Acknowledgement

The negative acknowledgement error codes are described in 12.2.14, “ErrorValue”, on page 115.

14.2.4.3 Operational Model

14.2.4.3.1 Connection State Transitions

There are no connection state changes due to this service.

14.2.4.3.2 Device-Type Monitoring Event Sequences

There are no events generated as a result of this service.

14.2.4.3.3 Call-Type Monitoring Event Sequences

There are no events generated as a result of this service.

14.2.4.3.4 Functional Requirements

1. If supported by the switching function, the Switching Function Devices Changed service shall be sent whenever switching function device information has changed, whether or not the Get Switching Function Devices service has been previously issued.

15 Monitoring Services

NOTE This clause describes Monitoring Services between the Switching Function and the Computing Function.

15.1 Services

Table 15-1 Monitoring Services Summary

Monitoring Service	Description	Pg.
15.1.1 Change Monitor Filter	Modifies the event filter for an existing monitor.	199
15.1.2 Monitor Start	Initiates an event monitor on a specified device or call.	200
15.1.3 Monitor Stop	Terminates an existing monitor.	204

© ISO/IEC 2007 – All rights reserved

Copyright International Organization for Standardization
Provided by IHS under license with ISO
No reproduction or networking permitted without license from IHS Not for Resale

15.1.1 Change Monitor Filter

C ⟶ S

The Change Monitor Filter service is used to modify the set of event reports that are filtered out (not sent) over an existing monitor.

The new set of filtered out (not sent) event reports may be listed in the service acknowledgement.

15.1.1.1 Service Request

Table 15-2 Change Monitor Filter—Service Request

Parameter Name	Type	M/ O/C	Description
crossRefIdentifier	MonitorCrossRefID	M	This indicates the monitor for which to change the filter.
requestedFilterList	MonitorFilter	M	This parameter specifies the requested set of events to be filtered out (not sent) by the server. It is a bitmap of all events defined in this Standard.
security	CSTASecurityData	O	Specifies timestamp information, message sequence number, and security information.
privateData	CSTAPrivateData	O	Specifies non-standardized information.

15.1.1.2 Service Response

This service follows the atomic acknowledgement model for this service request.

15.1.1.2.1 Positive Acknowledgement

Table 15-3 Change Monitor Filter—Positive Acknowledgement

Parameter Name	Type	M/ O/C	Description
actualFilterList	MonitorFilter	C	This parameter specifies the actual set of events that will be filtered out (not sent) by the server. It is a bitmap of all events defined in this Standard. The actual events filtered may differ from the requestedFilterList parameter on the service request (See Functional Requirement #2). This parameter is optional if the actualFilterList is the same as the requestedFilterList parameter on the service request, otherwise it is mandatory.
security	CSTASecurityData	O	Specifies timestamp information, message sequence number, and security information.
privateData	CSTAPrivateData	O	Specifies non-standardized information.

15.1.1.2.2 Negative Acknowledgement

The negative acknowledgement error codes are described in 12.2.14, “ErrorValue”, on page 115.

15.1.1.3 Operational Model

15.1.1.3.1 Connection State Transitions

There are no connection state changes due to this service.

© ISO/IEC 2007 – All rights reserved

Copyright International Organization for Standardization
Provided by IHS under license with ISO
No reproduction or networking permitted without license from IHS
Not for Resale

15.1.1.3.2 Monitoring Requirements

1. Once a request has been acknowledged, a new set of events will be filtered out (not sent) by the server.

15.1.1.3.3 Functional Requirements

1. An implementation that does not support all event reports, or that does not support filtering will nevertheless accept the Change Monitor Filter service even if the requested filter cannot be provided. In this case, the service acknowledgement indicates the actual set of events that will be filtered out (not sent). This means that the actual set of filtered events returned in the positive acknowledgement may include additional events to be filtered out (or fewer monitored events supported for the monitor) than those requested in the service request. For example, an implementation that does not support event filtering responds to the Change Monitor Filter service with a filter that shows provided events as unfiltered and unimplemented events as filtered out. Similarly, an implementation that does not support, for example, Delivered events, shall always respond with a filter indicating that Delivered events will not be reported.

15.1.2 Monitor Start

C ⟶ S

The Monitor Start service initiates event reports (otherwise known as events) for a call, device, or for one or more calls involving a device.

The server starts a monitor, allocates a Monitor Cross Reference Identifier that uniquely identifies the monitor, and then positively acknowledges the request. All activities satisfying the filter provided (for example: call, feature, agent, private) trigger events which are delivered as a stream of event reports to the server. Each event contains the Monitor Cross Reference Identifier that correlates the event back to the Monitor Start service that established the monitor.

These event reports cease after the switching function terminates the monitor. Service termination can result from a client request (15.1.3, “Monitor Stop”, on page 204) or it can be initiated by the server. The switching function shall terminate the monitor if the monitorObject ceases to exist, or if the monitorObject leaves the switching sub-domain. There may be other conditions that cause the server to terminate the monitor.

Once the monitor is terminated, the monitor cross reference ID is no longer valid.

Please refer to 6.6.2, “Monitoring”, on page 65 for an overview of monitoring and related concepts such as monitor objects, monitor types, monitor call types, and monitor filters.

15.1.2.1 Service Request

Table 15-4 Monitor Start—Service Request

Parameter Name	Type	M/ O/C	Description
monitorObject	Choice Structure	M	Specifies the monitor object of a call or device to be monitored. This shall be one of the following choices: • call (ConnectionID) - Specifies a call (connection) object. • device (DeviceID) - Specifies a device object. See Functional Requirement #5.

--`,,```,,,,````-`-`,,`,,`,`,,`---
© ISO/IEC 2007 – All rights reserved
Copyright International Organization for Standardization
Provided by IHS under license with ISO
No reproduction or networking permitted without license from IHS
Not for Resale

Table 15-4 Monitor Start—Service Request (continued)

Parameter Name	Type	M/ O/C	Description
requestedMonitorFilter	MonitorFilter	O	This parameter specifies the requested set of events to be filtered out (not sent) by the switching function. It is a bitmap of all events defined in this Standard. If this parameter is not provided (or if the parameter is not supported by the switching function), then it shall mean that no filtering of events is requested (all events are requested).
monitorType	Enumerated	O	Specifies the type of monitor requested. The complete set of possible values is: • call-type • device-type If this parameter is not provided (or if the parameter is not supported by the switching function), then the monitor type shall be selected by the switching function (as indicated by the capabilities exchange services).
requestedMonitorMediaClass	Bitmap	O	Specifies the media classes (voice, digital data, Email, message, etc.) of calls that are being requested to be monitored for the monitorObject. Refer to the mediaClass component in 12.2.18, “MediaCallCharacteristics”, on page 130 for the complete set of possible values. Note that multiple bits may be set. If this parameter is not provided (or if the parameter is not supported by the switching function), it is switching function dependent which media classes of calls are monitored.
security	CSTASecurityData	O	Specifies timestamp information, message sequence number, and security information.
privateData	CSTAPrivateData	O	Specifies non-standardized information.

15.1.2.2 Service Response

This service follows the atomic acknowledgement model for this service request.

15.1.2.2.1 Positive Acknowledgement

Table 15-5 Monitor Start—Positive Acknowledgement

Parameter Name	Type	M/ O/C	Description
crossRefIdentifier	MonitorCrossRefID	M	This indicates a value that is unique within the association for the duration of the monitor and that can be used to relate subsequent events to the monitor request that initiated them. It shall also allow correlating Monitor Stop and subsequent Change Monitor Filter services with the original Monitor Start service on which they act.

© ISO/IEC 2007 – All rights reserved

Copyright International Organization for Standardization
Provided by IHS under license with ISO
No reproduction or networking permitted without license from IHS
Not for Resale

Table 15-5 Monitor Start—Positive Acknowledgement (continued)

Parameter Name	Type	M/ O/C	Description
actualMonitorFilter	MonitorFilter	C	This parameter specifies the actual set of events that will be filtered (not sent) by the switching function. It is a bitmap of all events defined in this Standard. The actual events filtered out may differ from the filterList parameter on the service request (See Functional Requirement #1). If this parameter is supported by the switching function, it may be omitted if the requested and actual monitor filters are the same, otherwise it shall be provided. If the parameter is not supported by the switching function, then the switching function does not filter events and all events supported (as indicated by the capability exchange services) shall be sent for this monitor.
actualMonitorMediaClass	Bitmap	C	This parameter specifies the actual media classes of calls that are monitored by the switching function for this monitor. The actual media classes of calls monitored may be the same or a subset of what was requested on the service request. If this parameter is supported by the switching function, it may be omitted if the requested and actual monitor media class parameters are the same otherwise it shall be provided. If the parameter is not supported by the switching function, then the switching function does not filter call types for specific monitors. The capability exchange services indicates the media classes of calls that can be monitored.
monitorExistingCalls	Boolean	O	Indicates whether or not the computing function will receive event reports regarding calls that are currently existing at the device at which the monitor was started. The complete set of possible values is: • TRUE - Indicates event reports will be provided for calls that are at the device at the time of the acknowledgement [Default]. • FALSE - Indicates event reports will not be provided for calls that are at the device at the time of the acknowledgement. This parameter is applicable to monitors that have devices as their object. For such monitors, if this parameter is not present (or the parameter is not supported), it means that the switching function always provides event reports for calls that are currently present at the device when the monitor was started.
security	CSTASecurityData	O	Specifies timestamp information, message sequence number, and security information.
privateData	CSTAPrivateData	O	Specifies non-standardized information.

15.1.2.2.2 Negative Acknowledgement

The negative acknowledgement error codes are described in 12.2.14, “ErrorValue”, on page 115.

--`,,```,,,,````-`-`,,`,,`,`,,`---
© ISO/IEC 2007 – All rights reserved
Copyright International Organization for Standardization
Provided by IHS under license with ISO
No reproduction or networking permitted without license from IHS
Not for Resale

15.1.2.3 Operational Model

15.1.2.3.1 Connection State Transitions

There are no connection state changes due to this service.

15.1.2.3.2 Monitoring Requirements

1. For call related events, events are provided for all devices associated with the call or device being monitored. For non-call related events, events are provided for the monitored device.
2. Once a call is monitored (irrespective of the monitor type or monitor object), all connection state changes that are known by the switching function are reported (subject to the Monitor Filter).
    - For example, if device A is being monitored (with a device-type monitor) and a call is placed to device B (no monitor on B), then any connection state changes for either device A or B (such as when B receives the Delivered event and answers the call) will be reported through device A's monitor.
    - Monitoring is only guaranteed for devices in the switching sub-domain. Activity related to devices outside the switching sub-domain may be only partially available or completely unreported.
3. Since some devices do not support all events, when a device enters a call that is being monitored with a call-type monitor, there may be a reduced set of event reporting associated with that monitor.

15.1.2.3.3 Functional Requirements

1. An implementation that does not support all event reports, or that does not support filtering will nevertheless accept the Monitor Start service even if the requested filter cannot be provided. In this case (if the actualMonitorFilter parameter is supported), the service acknowledgement indicates the actual set of events that will be filtered out. This means that the actual set of filtered events returned in the positive acknowledgement may include additional events to be filtered out (or less monitored events supported for the monitor) than those requested in the service request. For example, an implementation that does not support event filtering responds to the Monitor Start service with a filter that shows provided events as unfiltered and unimplemented events as filtered out. Similarly, an implementation that does not support, for example, Delivered events, shall respond with a filter indicating that Delivered events will not be reported.
2. If the switching function does not support the requestedMonitorFilter parameter (and the switching function is ignoring unsupported parameters, as defined by the capability exchange services), the computing function may receive events that it had requested to be filtered out.
3. When monitoring device configurations, refer to 6.1.5, "Referencing Devices, Elements, Appearances and Device Configurations".
4. Events that occurred prior to the Monitor Start positive acknowledgement are not reported.
5. When a call-type monitor is requested and a connection identifier is being provided, the connection identifier may consist of only the callID. This is an exception to the general rule that deviceIDs are always provided in connectionIDs (refer to section 12.3.9, "ConnectionID").
6. The Service Completion Failure event is *only* reported to device-type monitors on the device which has or had connection(s) that were used in the particular service request which is associated with this event (i.e., this event is not reported to any call-type monitors or device-type monitors for other devices in the call(s) associated with the service request).
7. If a computing function starts a monitor on a device, then issues another Monitor Start on the same device, the switching function will start a new monitor and will create a new Monitor Cross Reference

© ISO/IEC 2007 – All rights reserved

Copyright International Organization for Standardization
Provided by IHS under license with ISO
No reproduction or networking permitted without license from IHS
Not for Resale

Identifier. The new Monitor Start service request can be the same as the original or it may include a different Monitor Type or a different Monitor Filter.

8. The event reporting of the Failed event may vary depending on the given switching function. For the conditions under which the event reporting is limited, see section 6.7, “Additional Services, Features & Behaviour” and the Failed event section.
9. If filtering of the individual Private Events is desired, then the CSTA Private Data Information (privateData parameter) shall be used.

15.1.3 Monitor Stop

C ◄► S

The Monitor Stop service is used to cancel a previously initiated Monitor Start service.

The Monitor Stop service can be issued by a function to terminate or signal the termination of a corresponding Monitor Start service.

A positive acknowledgement to the service request indicates that the Cross Reference ID used by the Monitor Start service has become invalid.

15.1.3.1 Service Request

Table 15-6 Monitor Stop—Service Request

Parameter Name	Type	M/ O/C	Description
crossRefIdentifier	MonitorCrossRefID	M	This indicates the Cross Reference Identifier provided in the original Monitor Start service positive acknowledgement.
security	CSTASecurityData	O	Specifies timestamp information, message sequence number, and security information.
privateData	CSTAPrivateData	O	Specifies non-standardized information.

15.1.3.2 Service Response

This service follows the atomic acknowledgement model for this service request.

15.1.3.2.1 Positive Acknowledgement

Table 15-7 Monitor Stop—Positive Acknowledgement

Parameter Name	Type	M/ O/C	Description
security	CSTASecurityData	O	Specifies timestamp information, message sequence number, and security information.
privateData	CSTAPrivateData	O	Specifies non-standardized information.

15.1.3.2.2 Negative Acknowledgement

The negative acknowledgement error codes are described in 12.2.14, “ErrorValue”, on page 115.

15.1.3.3 Operational Model

15.1.3.3.1 Connection State Transitions

There are no connection state changes due to this service.

© ISO/IEC 2007 – All rights reserved

Copyright International Organization for Standardization
Provided by IHS under license with ISO
No reproduction or networking permitted without license from IHS
Not for Resale

15.1.3.3.2 Monitoring Requirements

1. Once a request has been acknowledged, event reports are no longer sent.

15.1.3.3.3 Functional Requirements

1. This service can be sent to the function that requested a monitor to report that the monitor has been terminated.
2. The switching function may issue a Monitor Stop service when it can no longer provide information. Examples of when this may occur are:
   - For monitors on calls that have ended (call monitoring).
   - For load management reasons.
   - If the monitor object leaves the switching sub-domain (via configuration, for example).

16 Snapshot Services

NOTE This clause describes Snapshot Services between the Switching Function and the Computing Function.

16.1 Services

Table 16-1 Snapshot Services Summary

Snapshot Service	Description	Pg.
16.1.1 Snapshot Call	Provides information about the devices participating in a specified call.	205
16.1.2 Snapshot Device	Provides information on the status of calls at a specific device.	209
16.1.3 Snapshot CallData	Provides Snapshot Call Information in segmented messages.	211
16.1.4 Snapshot DeviceData	Provides Snapshot Device Information in segmented messages.	213

16.1.1 Snapshot Call

C ⟶ S

The Snapshot Call service provides information about the devices participating in a specified call. The information provided includes device identifiers, their connections in the call, and local connection states of the devices in the call as well as call related information.

Information that applies to the entire call shall be provided in the Snapshot Call positive response.

Information that is specific to each endpoint in the call (snapshotData parameter) shall be provided using one of two possible mechanisms (as indicated by the capability exchange services): either in the Snapshot Call positive acknowledgement or in one or more messages using the Snapshot CallData Service. Note that both mechanisms cannot be used at the same time.

If the switching function supports the Dynamic Feature Availability option (as indicated through the capabilities exchange services), then for each connection in the call, this service provides the list of permitted call control services.

© ISO/IEC 2007 – All rights reserved

Copyright International Organization for Standardization
Provided by IHS under license with ISO
No reproduction or networking permitted without license from IHS
Not for Resale

16.1.1.1 Service Request

Table 16-2 Snapshot Call—Service Request

Parameter Name	Type	M/ O/C	Description
snapshotObject	ConnectionID	M	This indicates the connectionID of the call to be snapshot. See Functional Requirement #2.
security	CSTASecurityData	O	Specifies timestamp information, message sequence number, and security information.
privateData	CSTAPrivateData	O	Specifies non-standardized information.

16.1.1.2 Service Response

This service follows the atomic acknowledgement model for this service request.

16.1.1.2.1 Positive Acknowledgement

Table 16-3 Snapshot Call—Positive Acknowledgement

Parameter Name	Type	M/ O/C	Description
serviceCrossRefID	ServiceCrossRefID	C	Specifies the reference used to associate subsequent Snapshot CallData services to this service request. This parameter is mandatory if the switching function is providing the snapshot information using the Snapshot CallData service, otherwise it shall not be provided.

© ISO/IEC 2007 – All rights reserved

Copyright International Organization for Standardization
Provided by IHS under license with ISO
No reproduction or networking permitted without license from IHS
Not for Resale

Table 16-3 Snapshot Call—Positive Acknowledgement (continued)

Parameter Name	Type	M/ O/C	Description

snapshotData	List of Structures	C	Specifies information for each endpoint in a call.
			This parameter is mandatory if the switching function is providing all of the response information in this message. This parameter shall not be provided if the switching function is providing the snapshot information using the Snapshot CallData Service.
			The complete set of possible information is:
			• deviceOnCall (M) DeviceID - Of a device involved with the endpoint.
			• connectionIdentifier (C) ConnectionID - For the endpoint. This is mandatory if the endpoint is in the switching sub-domain, otherwise it is optional.
			• localConnectionState (O) LocalConnectionState - For the endpoint.
			• servicesPermitted (C) ServicesPermitted - This is mandatory if the switching function supports the Dynamic Feature Availability option (as indicated through the capabilities exchange service).
			• mediaServiceInformationList (O) List of Structure - Specifies information about the media services that are attached (bound to) the connection in the call. The complete set of possible information is:
			  • mediaServiceType (M) MediaServiceType - A media service type that has been bound to the connection.
			  • mediaServiceVersion (O) Value. The version of the media services.
			  • mediaServiceInstance (O) MediaServiceInstanceID - A media service instance associated with the media service bound to the connection.
			  • mediaStreamID (C) MediaStreamID - The media stream identifier for the media service binding. This shall be provided if the switching function supports providing the mediaStreamID as indicated by the capability exchange services.
			  • connectionInformation (O) ConnectionInformation - The connection information associated with the callIdentifier connection.

mediaCallCharacteristics	MediaCallCharacteristics	O	This specifies the media class and data characteristics of the call. See 12.2.18, “MediaCallCharacteristics”, on page 130 for the list of possible values.
callCharacteristics	CallCharacteristics	O	Specifies the high level characteristics (ACD call, Priority call, etc.) associated with the call. See 12.2.4, “CallCharacteristics”, on page 108 for the complete set of possible values.
callingDevice	CallingDeviceID	O	Specifies the calling device.
calledDevice	CalledDeviceID	O	Specifies the called device.
associatedCallingDevice	AssociatedCallingDeviceID	C	Specifies the Network Interface Device associated with the calling device if the call is an external incoming call. This parameter is mandatory for all external incoming calls and shall not be provided otherwise.

--`,,```,,,,````-`-`,,`,,`,`,,`---
© ISO/IEC 2007 – All rights reserved

Copyright International Organization for Standardization
Provided by IHS under license with ISO
No reproduction or networking permitted without license from IHS
Not for Resale

Table 16-3 Snapshot Call—Positive Acknowledgement (continued)

Parameter Name	Type	M/ O/C	Description
associatedCalledDevice	AssociatedCalledDeviceID	C	For outgoing external calls, this parameter specifies the Network Interface Device associated with the originally called device. For incoming external calls, this parameter specifies a device within the switching sub-domain associated with the originally called device. This parameter is mandatory for all external outgoing calls and it is optional for external incoming calls.
correlatorData	CorrelatorData	C	Specifies the correlator data associated with the call. This parameter is mandatory if there is correlator data associated with the call.
callLinkageData	CallLinkageData	C	Specifies the global call data and thread data associated with the call. This parameter is mandatory if the switching function supports the call linkage feature otherwise it shall not be provided.
subjectOfCall	SubjectOfCall	O	Specifies the subject/intent of the call. This could represent the subject header of an Email (text call) or intent for a voice call, for example.
messageInfo	MessageInfo	O	Specifies the contents of message information associated with a call. The message information consists of one of more items.
languagePreferences	LanguagePreferences	O	Specifies the language preferences associated with the call.
deviceHistory	DeviceHistory	O	Specifies the list of devices which were previously associated with the call (e.g. redirecting, transferring, clearing devices).
security	CSTASecurityData	O	Specifies timestamp information, message sequence number, and security information.
privateData	CSTAPrivateData	O	Specifies non-standardized information.

16.1.1.2.2 Negative Acknowledgement

The negative acknowledgement error codes are described in 12.2.14, “ErrorValue”, on page 115.

16.1.1.2.3 Operational Model

16.1.1.2.4 Connection State Transitions

There are no connection state changes due to this service.

16.1.1.2.5 Monitoring Requirements

This service does not affect existing monitors.

16.1.1.2.6 Functional Requirements

1. The Snapshot Call service is intended to provide information about devices in calls that makes further monitoring more meaningful. For example, if the computing function started working with a call, the event reports needed to provide synchronization may not occur for some time. To facilitate operations before an event report is available to synchronize the monitor, it is necessary to be able to query the current state of devices. Snapshot Call service provides this function.

© ISO/IEC 2007 – All rights reserved

Copyright International Organization for Standardization
Provided by IHS under license with ISO
No reproduction or networking permitted without license from IHS
Not for Resale

2. The connection ID provided in the service may consist of only a callID portion. This is an exception to the rule of always providing deviceIDs in connectionIDs of service requests as described in 12.3.9, “ConnectionID”, on page 141.
3. If the switching function is providing the snapshot response information in multiple messages, it shall support the Snapshot CallData service. In this case, the computing function can associate subsequent Snapshot CallData services to the original Snapshot Call service by means of the serviceCrossRefID parameter.

16.1.2 Snapshot Device

C ⟶ S

The Snapshot Device service provides information about calls associated with a given device. The information provided identifies each call the device is participating in and the local connection state of the device in that call.

The switching function shall provide the response information using one of two possible mechanisms (as indicated by the capability exchange services): either in the Snapshot Device positive acknowledgement or in one or more messages using the Snapshot DeviceData Service. Note that both mechanisms cannot be used at the same time.

If the switching function supports the Dynamic Feature Availability option (as indicated through the capabilities exchange services), then for each connection at the device, this service provides the list of permitted call control services.

16.1.2.1 Service Request

Table 16-4 Snapshot Device—Service Request

Parameter Name	Type	M/ O/C	Description
snapshotObject	DeviceID	M	This indicates the deviceID of the device to be snapshot.
security	CSTASecurityData	O	Specifies timestamp information, message sequence number, and security information.
privateData	CSTAPrivateData	O	Specifies non-standardized information.

16.1.2.2 Service Response

This service follows the atomic acknowledgement model for this service request.

16.1.2.2.1 Positive Acknowledgement

Table 16-5 Snapshot Device—Positive Acknowledgement

Parameter Name	Type	M/ O/C	Description
serviceCrossRefID	ServiceCrossRefID	C	Specifies the reference used to associate subsequent Snapshot DeviceData services to this service request. This parameter is mandatory if the switching function is providing the snapshot device information using the Snapshot DeviceData service, otherwise it shall not be provided.

© ISO/IEC 2007 – All rights reserved

Copyright International Organization for Standardization
Provided by IHS under license with ISO
No reproduction or networking permitted without license from IHS
Not for Resale

Table 16-5 Snapshot Device—Positive Acknowledgement (continued)

Parameter Name	Type	M/ O/C	Description

snapshotData	List of Structures	C	Specifies information for each call at a device.
			This parameter is mandatory if the switching function is providing all of the response information in this message. This parameter shall not be provided if the switching function is providing the response information using the Snapshot DeviceData Service.
			This complete set of information is:
			• connectionIdentifier (M) ConnectionID
			• endpointDevice (O) DeviceID - specifies the deviceID of the endpoint associated with the connectionIdentifier (see Functional Requirement #3).
			• localCallState (M) Choice Structure - This shall be one of the following choices:
			  • compoundCallState (List of LocalConnectionStates) - This consists of a sequence of local connection states.
			  • simpleCallState (SimpleCallState) - the simple call state.
			  • unknown
			• servicesPermitted (C) ServicesPermitted - This is mandatory if the switching function supports the Dynamic Feature Availability option (as indicated through the capabilities exchange services).
			• mediaServiceInformationList (O) List of Structures - Specifies information about the media services that are attached (bound to) the connection in the call. The complete set of possible components is:
			  • mediaStreamID (C) MediaStreamID - The media stream identifier for the media service binding. This shall be provided if the switching function supports providing the mediaStreamID as indicated by the capability exchange services.
			  • connectionInformation (O) ConnectionInformation - The connection information associated with the callIdentifier connection.
			• mediaCallCharacteristics (O) MediaCallCharacteristics - specifies the media class and data characteristics of the call. See 12.2.18, “MediaCallCharacteristics”, on page 130 for the list of possible values.

security	CSTASecurityData	O	Specifies the timestamp information, message sequence number, and security information.
privateData	CSTAPrivateData	O	Specifies non-standardized information.

16.1.2.2.2 Negative Acknowledgement

The negative acknowledgement error codes are described in 12.2.14, “ErrorValue”, on page 115.

16.1.2.3 Operational Model

16.1.2.3.1 Connection State Transitions

There are no connection state changes due to this service.

© ISO/IEC 2007 – All rights reserved
Copyright International Organization for Standardization
Provided by IHS under license with ISO
No reproduction or networking permitted without license from IHS
Not for Resale

16.1.2.3.2 Monitoring Requirements

This service does not affect existing monitors.

16.1.2.3.3 Functional Requirements

1. The Snapshot Device service is intended to provide information about devices to make further monitoring more meaningful. For example, when a computing function starts working with a device, the event reports needed to provide synchronization may not occur for some time. To facilitate operations before event reports synchronize the monitor, it is necessary to be able to query the current state of devices. Snapshot Device service provides that function.
2. If the switching function is providing the snapshot device response information in multiple messages, it shall support the Snapshot DeviceData service. In this case, the computing function can associate subsequent Snapshot DeviceData services to the original Snapshot Device service by means of the serviceCrossRefID parameter.
3. If the snapshotObject in the Snapshot Device service request is a group device, the endpointDevice in the snapshotData parameter indicates the device in the group associated with the connection.

16.1.3 Snapshot CallData

S → C

This service is generated as a result of the Snapshot Call service. It is used when the switching function is providing snapshot call information in multiple messages (otherwise the switching function provides the snapshot call information in the Snapshot Call positive acknowledgement).

The information provided includes information about the endpoints in the call (information about the entire call is provided in the Snapshot Call positive response).

The switching function may generate a sequence of Snapshot CallData services, individually referred to as segments, in response to a single Snapshot Call service request.

16.1.3.1 Service Request

Table 16-6 Snapshot CallData—Service Request

Parameter Name	Type	M/ O/C	Description
serviceCrossRefID	ServiceCrossRefID	M	Specifies the reference used to associate the Snapshot CallData service messages to the Snapshot Call service request.
segmentID	Value	O	Specifies the segment number of this message. Each successive segment number in the sequence increments the segmentID by one.
lastSegment	Boolean	M	Specifies if this segment is the last one associated with the serviceCrossRefID. The complete set of possible values is: • TRUE - Indicates that this is the last segment. • FALSE - Indicates that this is not the last segment in the sequence.

© ISO/IEC 2007 – All rights reserved

Copyright International Organization for Standardization
Provided by IHS under license with ISO
No reproduction or networking permitted without license from IHS
Not for Resale

Table 16-6 Snapshot CallData—Service Request (continued)

Parameter Name	Type	M/ O/C	Description

snapshotData	List of Structures	M	Specifies information for each endpoint in a call. The complete set of possible information is:
			• deviceOnCall (M) DeviceID - Of a device involved with the endpoint.
			• connectionIdentifier (C) ConnectionID - For the endpoint. This is mandatory if the endpoint is in the switching sub-domain, otherwise it is optional.
			• localConnectionState (O) LocalConnectionState - For the endpoint.
			• servicesPermitted (C) ServicesPermitted - This is mandatory if the switching function supports the Dynamic Feature Availability option (as indicated through the capabilities exchange service).
			• mediaServiceInformationList (O) List of Structures - Specifies information about the media services that are attached (bound to) the connection in the call. The complete set of components is:
			  • mediaServiceType (M) MediaServiceType - A media service type that has been bound to the connection.
			  • mediaServiceVersion (O) Value. The version of the media services.
			  • mediaServiceInstance (O) MediaServiceInstanceID - A media service instance associated with the media service bound to the connection.
			  • mediaStreamID (C) MediaStreamID - The media stream identifier for the media service binding. This shall be provided if the switching function supports providing the mediaStreamID as indicated by the capability exchange services.
			  • connectionInformation (O) ConnectionInformation - The connection information associated with the callIdentifier connection.

security	CSTASecurityData	O	Specifies timestamp information, message sequence number, and security information.
privateData	CSTAPrivateData	O	Specifies non-standardized information.

16.1.3.2 Service Response

There are no service request completion conditions associated with this service.

16.1.3.2.1 Positive Acknowledgement

There is no positive acknowledgement associated with this service request.

16.1.3.2.2 Negative Acknowledgement

The negative acknowledgement error codes are described in 12.2.14, “ErrorValue”, on page 115.

16.1.3.3 Operational Model

© ISO/IEC 2007 – All rights reserved
--`,,```,,,,````-`-`,,`,,`,`,,`---
Copyright International Organization for Standardization
Provided by IHS under license with ISO
No reproduction or networking permitted without license from IHS
Not for Resale

16.1.3.3.1 Connection State Transitions

There are no connection state changes due to this service.

16.1.3.3.2 Device-Type Monitoring Event Sequences

There are no events generated as a result of this service.

16.1.3.3.3 Call-Type Monitoring Event Sequences

There are no events generated as a result of this service.

16.1.3.3.4 Functional Requirements

1. Due to the nature of the switching function configuration, the switching function may buffer the Snapshot CallData messages to the computing function. The time between these messages may vary significantly between various implementations.
2. The switching function may include information for one or more endpoints in each segment.
3. The information reported in the sequence of segments generated from the Snapshot Call service request represents the state of the call at the time the Snapshot Call service is positively acknowledged.

16.1.4 Snapshot DeviceData

S ⟶ C

This service is generated as a result of the Snapshot Device service. It is used when the switching function is providing snapshot device response information in multiple messages (otherwise the switching function provides the snapshot device response in the Snapshot Device positive acknowledgement).

This includes information about calls associated with a given device. The information provided identifies each call the device is participating in and the local connection state of the device in that call.

The switching function may generate a sequence of Snapshot DeviceData services, individually referred to as segments, in response to a single Snapshot Device service request.

16.1.4.1 Service Request

Table 16-7 Snapshot DeviceData—Service Request

Parameter Name	Type	M/ O/C	Description
serviceCrossRefID	ServiceCrossRefID	M	Specifies the reference used to associate the Snapshot DeviceData service messages to the Snapshot Device service request.
segmentID	Value	O	Specifies the segment number of this message. Each successive segment number in the sequence increments the segmentID by one.
lastSegment	Boolean	M	Specifies if this segment is the last one associated with the serviceCrossRefID. The complete set of possible values is: • TRUE - Indicates that this is the last segment. • FALSE - Indicates that this is not the last segment in the sequence.

© ISO/IEC 2007 – All rights reserved

Copyright International Organization for Standardization
Provided by IHS under license with ISO
No reproduction or networking permitted without license from IHS
Not for Resale

Table 16-7 Snapshot DeviceData—Service Request (continued)

Parameter Name	Type	M/ O/C	Description

snapshotData	List of Structures	M	Specifies information for each call at a device.
			This complete set of information is:
			• connectionIdentifier (M) ConnectionID
			• endpointDevice (O) DeviceID - specifies the deviceID of the endpoint associated with the connectionIdentifier (see Functional Requirement #4).
			• localCallState (M) Choice Structure - This shall be one of the following choices:
			  • compoundCallState (List of LocalConnectionStates) - This consists of a sequence of local connection states.
			  • simpleCallState (SimpleCallState) - The simple call state.
			  • unknown
			• servicesPermitted (C) ServicesPermitted - This is mandatory if the switching function supports the Dynamic Feature Availability option (as indicated through the capabilities exchange services).
			• mediaServiceInformationList (O) List of Structures - Specifies information about the media services that are attached (bound to) the connection in the call. The complete set of possible components include:
			  • mediaStreamID (C) MediaStreamID - The media stream identifier for the media service binding. This shall be provided if the switching function supports providing the mediaStreamID as indicated by the capability exchange services.
			  • connectionInformation (O) ConnectionInformation - The connection information associated with the callIdentifier connection
			• MediaCallCharacteristics (O) MediaCallCharacteristics - specifies the media class and data characteristics of the call.

security	CSTASecurityData	O	Specifies timestamp information, message sequence number, and security information.
privateData	CSTAPrivateData	O	Specifies non-standardized information.

16.1.4.2 Service Response

There are no service request completion conditions associated with this service.

16.1.4.2.1 Positive Acknowledgement

There is no positive acknowledgement associated with this service request.

16.1.4.2.2 Negative Acknowledgement

The negative acknowledgement error codes are described in 12.2.14, “ErrorValue”, on page 115.

© ISO/IEC 2007 – All rights reserved
Copyright International Organization for Standardization
Provided by IHS under license with ISO
No reproduction or networking permitted without license from IHS
Not for Resale

16.1.4.3 Operational Model

16.1.4.3.1 Connection State Transitions

There are no connection state changes due to this service.

16.1.4.3.2 Device-Type Monitoring Event Sequences

There are no events generated as a result of this service.

16.1.4.3.3 Call-Type Monitoring Event Sequences

There are no events generated as a result of this service.

16.1.4.3.4 Functional Requirements

1. Due to the nature of the switching function configuration, the switching function may buffer the Snapshot DeviceData messages to the computing function. The time between these messages may vary significantly between various implementations.
2. The switching function may include information for one or more connections in each segment.
3. The information reported in the sequence of segments generated from the Snapshot Device service request represents the state of the device at the time the Snapshot Device service is positively acknowledged.
4. If the snapshotObject in the Snapshot Device service request is a group device, the endpointDevice in the snapshotData parameter indicates the device in the group associated with the connection.

17 Call Control Services & Events

This clause describes the Call Control features of this Standard. It includes:

- Call Control services
- Call Control events

For a description of fundamental concepts, such as connection states, please refer to 6.1.3 beginning on page 49.

17.1 Services

Table 17-1 Call Control Services Summary

Call Control Service	Description	Pg.
17.1.1 Accept Call	Causes an offered call to transition to the Ringing or Entering Distribution mode of the alerting state.	216
15.1.2 Monitor Start	Places an existing call on hold and then retrieves a previously held or alerting call at the same device.	200
17.1.3 Answer Call	Answers a call that is ringing, queued, or being offered to a device.	221
17.1.4 Call Back Call-Related	Allows a computing function to request that an originally called device return a call to the original calling device.	223
17.1.5 Call Back Message Call-Related	Allows a computing function to instruct the switching function to leave a pre-defined message requesting that the called device call the calling device.	226
17.1.6 Camp On Call	Queues a call at a busy device until the device becomes available.	229

© ISO/IEC 2007 – All rights reserved

Copyright International Organization for Standardization
Provided by IHS under license with ISO
No reproduction or networking permitted without license from IHS
Not for Resale

Table 17-1 Call Control Services Summary (continued)

Call Control Service	Description	Pg.
17.1.7 Clear Call	Releases all of the devices associated with the specified call.	231
17.1.8 Clear Connection	Releases a specific device from a call.	234
17.1.9 Conference Call	Provides a conference of an existing held call and another active call at a conferencing device. The two calls are merged into a single call at the conferencing device.	237
17.1.10 Consultation Call	Places an existing active call at a device on hold and initiates a new call from the same device.	241
17.1.11 Deflect Call	Deflects a call to another device.	246
17.1.12 Dial Digits	Dials a digit sequence for a call that has already been initiated.	249
17.1.13 Directed Pickup Call	Picks a specified call. (Moves and connects a specified alerting or queued call.)	252
17.1.14 Group Pickup Call	Picks a call from a specified pick group. (Moves and connects any alerting call in a pick group to another device.)	255
17.1.15 Hold Call	Places a specific connection on hold.	259
17.1.16 Intrude Call	Allows a computing function to add the calling device to a call at a busy called device.	261
17.1.17 Join Call	Allows a computing function to request, on behalf of a device, that the device be joined into an existing call.	265
17.1.18 Make Call	Establishes a call between two devices.	269
17.1.19 Make Predictive Call	Establishes a call between two devices. The calling device is presented with the call only after the called device is alerted or has answered the call.	274
17.1.20 Park Call	Parks a call at a specified device. (Moves and queues a connected call to another device).	279
17.1.21 Reconnect Call	Clears an existing connection and then connects a previously held connection at the same device.	282
17.1.22 Retrieve Call	Connects to a call that had previously been placed on hold.	285
17.1.23 Send Message	Sends a message to one or more devices.	286
17.1.24 Single Step Conference Call	Adds a device to an existing call.	291
17.1.25 Single Step Transfer Call	Replaces a device in an existing call with another device.	295
17.1.26 Transfer Call	Transfers a held call to the consulted party.	298

17.1.1 Accept Call

C ⟶ S

The Accept Call service causes an offered call to transit from the offered mode to the Ringing or Entering Distribution mode of the alerting state.

© ISO/IEC 2007 – All rights reserved

Copyright International Organization for Standardization
Provided by IHS under license with ISO
No reproduction or networking permitted without license from IHS
Not for Resale

Figure 17-1 Accept Call Service

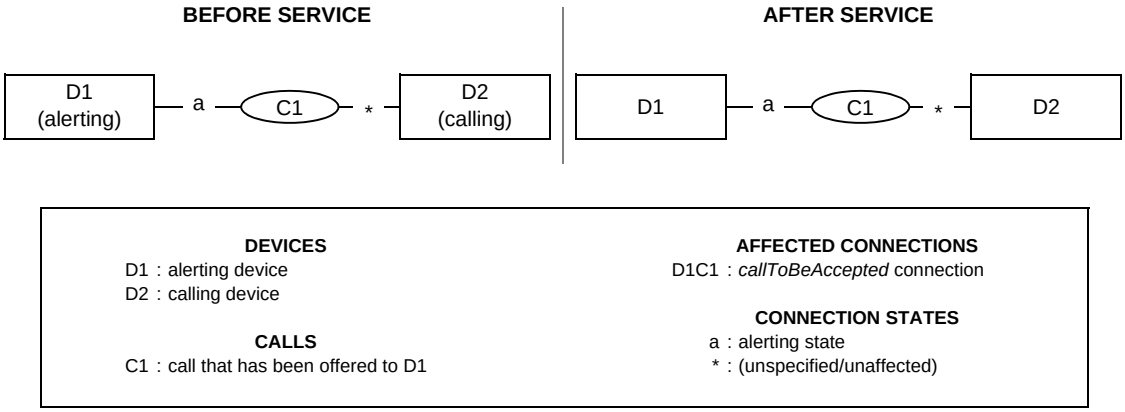

17.1.1.1 Service Request

Table 17-2 Accept Call—Service Request

Parameter Name	Type	M/ O/C	Description
callToBeAccepted	ConnectionID	M	Specifies the connection to be accepted.
correlatorData	CorrelatorData	O	Specifies the correlator data to associate with the call.
userData	UserData	O	Specifies the user data to be sent to parties in the call.
security	CSTASecurityData	O	Specifies timestamp information, message sequence number, and security information.
privateData	CSTAPrivateData	O	Specifies non-standardized information.

17.1.1.2 Service Response

The capability exchange services describe the type of acknowledgement model (atomic or multi-step) that the switching function supports for this service request.

17.1.1.2.1 Positive Acknowledgement

Table 17-3 Accept Call—Positive Acknowledgement

Parameter Name	Type	M/ O/C	Description
security	CSTASecurityData	O	Specifies timestamp information, message sequence number, and security information.
privateData	CSTAPrivateData	O	Specifies non-standardized information.

17.1.1.2.2 Negative Acknowledgement

The negative acknowledgement error codes are described in 12.2.14, “ErrorValue”, on page 115.

17.1.1.3 Operational Model

© ISO/IEC 2007 – All rights reserved

Copyright International Organization for Standardization
Provided by IHS under license with ISO
No reproduction or networking permitted without license from IHS
Not for Resale

17.1.1.3.1 Connection State Transitions

Table 17-4 Accept Call—Connection State Transitions

Connection	Initial State (Required)	Final State
D1C1 (callToBeAccepted)	Alerting (Offered mode only)	Alerting (Ringing or Entering Distribution mode)
other connections (i.e., D2C1)	(Unspecified)	(Unaffected; no transition due to this service).

17.1.1.3.2 Device-Type Monitoring Event Sequences

Table 17-5 Accept Call—Device-Type Monitoring Event Sequences

Monitored Device	Connection	Event	Event Cause
D1 (Alerting device)	D1C1 (callToBeAccepted)	Delivered	Normal, Entering Distribution
D2 (Calling device or any other devices in call C1)	D1C1 (callToBeAccepted)	Delivered	Normal, Entering Distribution

17.1.1.3.3 Call-Type Monitoring Event Sequences

Table 17-6 Accept Call—Call-Type Monitoring Event Sequences

Monitored Call	Connection	Event	Event Cause
C1	D1C1 (callToBeAccepted)	Delivered	Normal, Entering Distribution

17.1.1.3.4 Functional Requirements

1. If the computing function wants to clear an active call prior to accepting an alerting call for a device, it shall first issue a Clear Connection service for the active call and then issue the Accept Call service for the alerting call.

17.1.2 Alternate Call

C ⟶ S

The Alternate Call service places an existing active call on hold and then retrieves a previously held call. This service is also used to place an active call on hold and then connect to an alerting or queued call at the same device (i.e., to answer a call-waiting call).

© ISO/IEC 2007 – All rights reserved

Copyright International Organization for Standardization
Provided by IHS under license with ISO
No reproduction or networking permitted without license from IHS
Not for Resale

Figure 17-2 Alternate Call Service

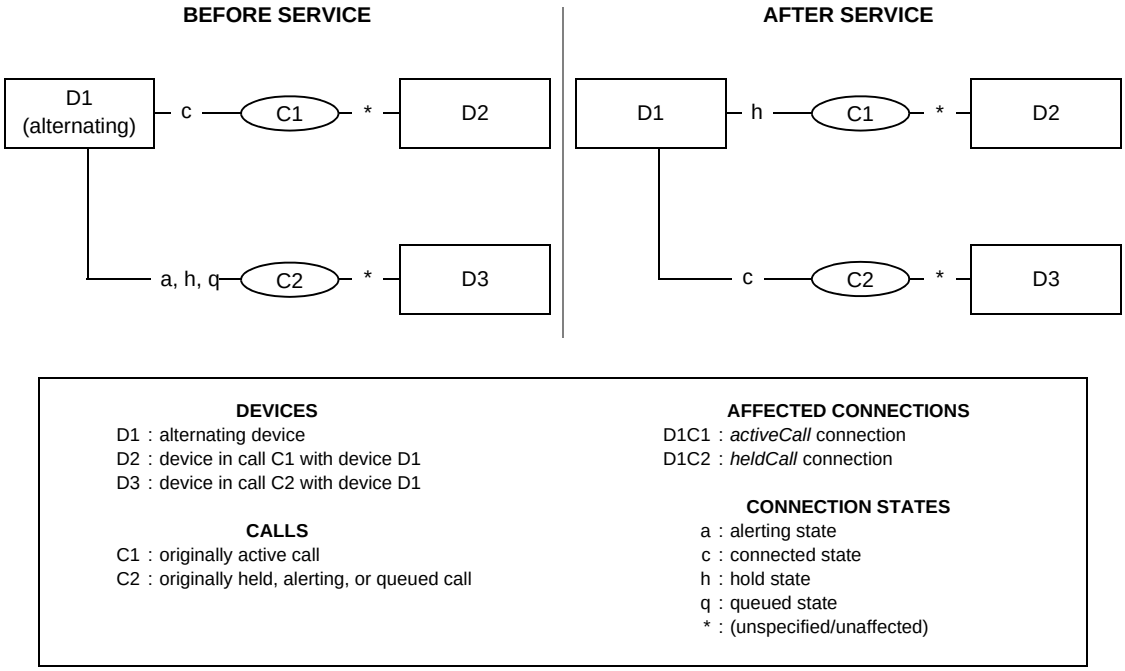

17.1.2.1 Service Request

Table 17-7 Alternate Call—Service Request

Parameter Name	Type	M/ O/C	Description
heldCall	ConnectionID	M	Specifies the held connection for the alternating device.
activeCall	ConnectionID	M	Specifies the active connection for the alternating device.
connectionReservation	Boolean	O	Specifies that the media stream channel(s) associated with the call being placed on hold be reserved for reuse at a later time. The complete set of possible values is: • True - channel(s) is to be reserved. • False - channel(s) is not to be reserved (default).
consultOptions	Enumerated	O	This parameter indicates the potential actions following the Alternate Call so that certain facilities can be allocated prior to a Transfer or Conference. The complete set of possible values is: • Consult Only • Transfer Only • Conference Only • Unrestricted (default) If the switching function supports this parameter, the computing function shall supply one of the values supported. If the switching function does not support this parameter, the implicit value is Unrestricted. This parameter does not indicate a restriction or otherwise affect the switching function's capabilities in any way with respect to services other than Transfer or Conference.

© ISO/IEC 2007 – All rights reserved

Copyright International Organization for Standardization
Provided by IHS under license with ISO
No reproduction or networking permitted without license from IHS
Not for Resale

Table 17-7 Alternate Call—Service Request (continued)

Parameter Name	Type	M/ O/C	Description
security	CSTASecurityData	O	Specifies timestamp information, message sequence number, and security information.
privateData	CSTAPrivateData	O	Non-standardized information.

17.1.2.2 Service Response

The capability exchange services describe the type of acknowledgement model (atomic or multi-step) that the switching function supports for this service request.

17.1.2.2.1 Positive Acknowledgement

Table 17-8 Alternate Call—Positive Acknowledgement

Parameter Name	Type	M/ O/C	Description
security	CSTASecurityData	O	Specifies timestamp information, message sequence number, and security information.
privateData	CSTAPrivateData	O	Specifies non-standardized information.

17.1.2.2.2 Negative Acknowledgement

The negative acknowledgement error codes are described in 12.2.14, “ErrorValue”, on page 115.

17.1.2.3 Operational Model

17.1.2.3.1 Connection State Transitions

Table 17-9 Alternate Call—Connection State Transitions

Connection	Initial State (Required)	Final State
D1C1 (activeCall)	Connected	Hold
D1C2 (heldCall)	Hold, Alerting, or Queued	Connected
other connections (i.e., D2C1, D3C2)	(Unspecified)	(Unaffected; no transition due to this service).

17.1.2.3.2 Device-Type Monitoring Event Sequences

Sequence of events using call-type monitoring is defined in Table D-1 for the following cases:

- Case A: Call C2 is on Hold at device D1 (Alternating Device)
- Case B: Call C2 is Alerting or Queued at device D1 (Alternating Device)

Table 17-10 Alternate Call—Device-Type Monitoring Event Sequences (Case A and B)

Monitored Device	Connection	Event	Event Cause
D1 (Alternating device)	D1C1 (activeCall)	Held	Transfer, Conference, Alternate, or Normal
	D1C2 (heldCall)	Retrieved (Case A)	Transfer, Conference, Alternate, or Normal
		Established (Case B)	

© ISO/IEC 2007 – All rights reserved

Copyright International Organization for Standardization
Provided by IHS under license with ISO
No reproduction or networking permitted without license from IHS
Not for Resale

Table 17-10 Alternate Call—Device-Type Monitoring Event Sequences (Case A and B) (continued)

Monitored Device	Connection	Event	Event Cause
D2 (or any other devices in conference with D2)	D1C1 (activeCall)	Held	Transfer, Conference, Alternate, or Normal
D3 (or any other devices in conference with D3)	D1C2 (heldCall)	Retrieved (Case A)	Transfer, Conference, Alternate, or Normal
		Established (Case B)	

17.1.2.3.3 Call-Type Monitoring Event Sequences

Sequence of events using call-type monitoring is defined in Table D-1 for the following cases:

- Case A: Call C2 is on Hold at device D1 (Alternating Device)
- Case B: Call C2 is Alerting or Queued at device D1 (Alternating Device)

Table 17-11 Alternate Call—Call-Type Monitoring Event Sequences (Case A and B)

Monitored Call	Connection	Event	Event Cause
C1 (originally active call)	D1C1 (activeCall)	Held	Transfer, Conference, Alternate, or Normal
C2 (originally held, alerting, or queued call)	D1C2 (heldCall)	Retrieved (Case A)	Transfer, Conference, Alternate, or Normal
		Established (Case B)	

17.1.2.3.4 Functional Requirements

1. The Alternate Call service shall not be used to put an alerting call on hold and re-connect to another call that is on hold.
2. This service is a multiple step service that is equivalent to the computing function issuing the Hold Call service for the activeCall ConnectionID and then issuing one of the following services:
   a. a Retrieve Call service for the heldCall ConnectionID.
   b. an Answer Call service for the heldCall ConnectionID.
   c. an Accept Call service for the heldCall ConnectionID.
3. The consultOptions parameter indicates the potential action following the Alternate Call service so that certain facilities can be allocated if a transfer or conference is desired. If the switching function supports the consultOptions parameter, the computing function shall provide one of the supported values of this parameter obtained through the capability exchange services. If the switching function requires preallocation of resources to support transfer or conference but is unable to allocate the resources required to support the indicated usage at this time, it shall reject the Alternate Call service request. This parameter does not indicate a restriction or otherwise affect the switching function's capabilities in any way with respect to services other than Transfer or Conference.
4. If all appearances of a shared bridged device configuration are in the hold state and the heldCall parameter contains an appearance's connection ID in the call, then the other appearances in the device configuration will return to the inactive mode (Queued state, Bridged Events).

17.1.3 Answer Call

C ⟶ S

The Answer Call service connects an alerting or queued call.

This service is typically associated with devices that have attached speakerphone units and headset telephones to connect to a call via hands-free operation. For example, when the call is answered, one of the following actions may occur:

© ISO/IEC 2007 – All rights reserved

Copyright International Organization for Standardization
Provided by IHS under license with ISO
No reproduction or networking permitted without license from IHS
Not for Resale

- If the specified device has a speaker and a microphone, the speaker and microphone are turned on.
- If the specified device only has a speaker, the speaker is turned on. The handset shall be picked up in order to have a two way conversation.
- If there is no speaker, then the handset shall be picked up in order to have a two-way conversation.
- If the specified device has a headset, the headset is turned on.

Figure 17-3 Answer Call Service

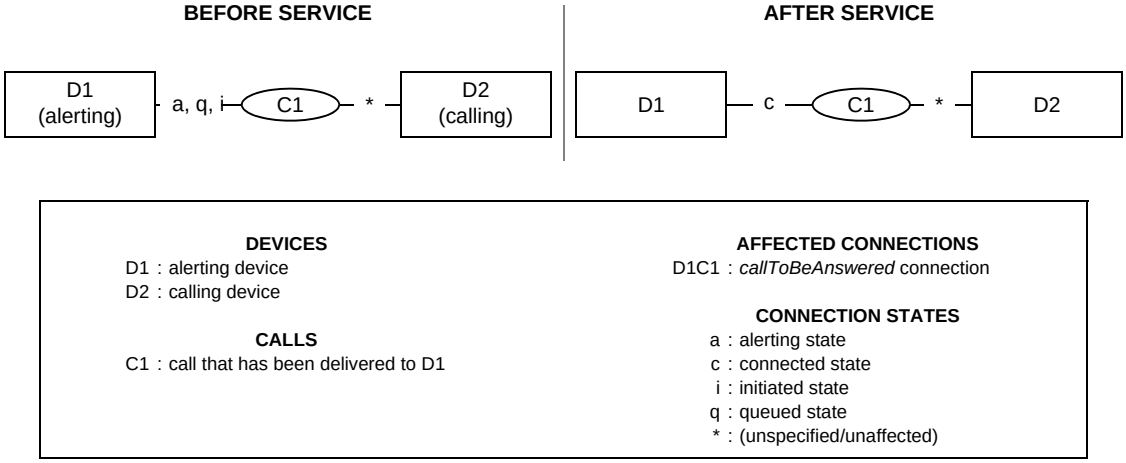

Note that D1 may also be the calling device (e.g. Make Predictive Call).

17.1.3.1 Service Request

Table 17-12 Answer Call—Service Request

Parameter Name	Type	M/ O/C	Description
callToBeAnswered	ConnectionID	M	Specifies the connection to be answered.
correlatorData	CorrelatorData	O	Specifies the correlator data to associate with the call.
userData	UserData	O	Specifies the user data to be sent to parties in the call.
security	CSTASecurityData	O	Specifies timestamp information, message sequence number, and security information.
privateData	CSTAPrivateData	O	Specifies non-standardized information.

17.1.3.2 Service Response

The capability exchange services describe the type of acknowledgement model (atomic or multi-step) that the switching function supports for this service request.

17.1.3.2.1 Positive Acknowledgement

Table 17-13 Answer Call—Positive Acknowledgement

Parameter Name	Type	M/ O/C	Description
security	CSTASecurityData	O	Specifies timestamp information, message sequence number, and security information.
privateData	CSTAPrivateData	O	Specifies non-standardized information.

--`,,```,,,,````-`-`,,`,,`,`,,`---
© ISO/IEC 2007 – All rights reserved
Copyright International Organization for Standardization
Provided by IHS under license with ISO
No reproduction or networking permitted without license from IHS
Not for Resale

17.1.3.2.2 Negative Acknowledgement

The negative acknowledgement error codes are described in 12.2.14, “ErrorValue”, on page 115.

17.1.3.3 Operational Model

17.1.3.3.1 Connection State Transitions

Table 17-14 Answer Call—Connection State Transitions

Connection	Initial State (Required)	Final State
D1C1 (callToBeAnswered)	Alerting, Initiated, or Queued	Connected
other connections (i.e., D2C1)	(Unspecified)	(Unaffected; no transition due to this service).

17.1.3.3.2 Device-Type Monitoring Event Sequences

Table 17-15 Answer Call—Device-Type Monitoring Event Sequences

Monitored Device	Connection	Event	Event Cause
D1 (Alerting device)	D1C1 (callToBeAnswered)	Established	Normal
D2 (Calling device or any other devices in conference with D2)	D1C1 (callToBeAnswered)	Established	Normal

17.1.3.3.3 Call-Type Monitoring Event Sequences

Table 17-16 Answer Call—Call-Type Monitoring Event Sequences

Monitored Call	Connection	Event	Event Cause
C1	D1C1 (callToBeAnswered)	Established	Normal

17.1.3.3.4 Functional Requirements

1. If the computing function wants to clear an active call prior to answering an alerting or queued call for a device, it shall first issue a Clear Connection service for the active call and then issue the Answer Call service for the alerting or queued call.

17.1.4 Call Back Call-Related

C ⟶ S

The Call Back Call-Related service allows a computing function to request that the calling device retry the call to the called device when the called device is in an appropriate state to accept the call.

As an example, the service might be used when a called device was busy so that the call is reattempted when the device becomes free.

© ISO/IEC 2007 – All rights reserved

Copyright International Organization for Standardization
Provided by IHS under license with ISO
No reproduction or networking permitted without license from IHS
Not for Resale

Figure 17-4 Call Back Call-Related Service

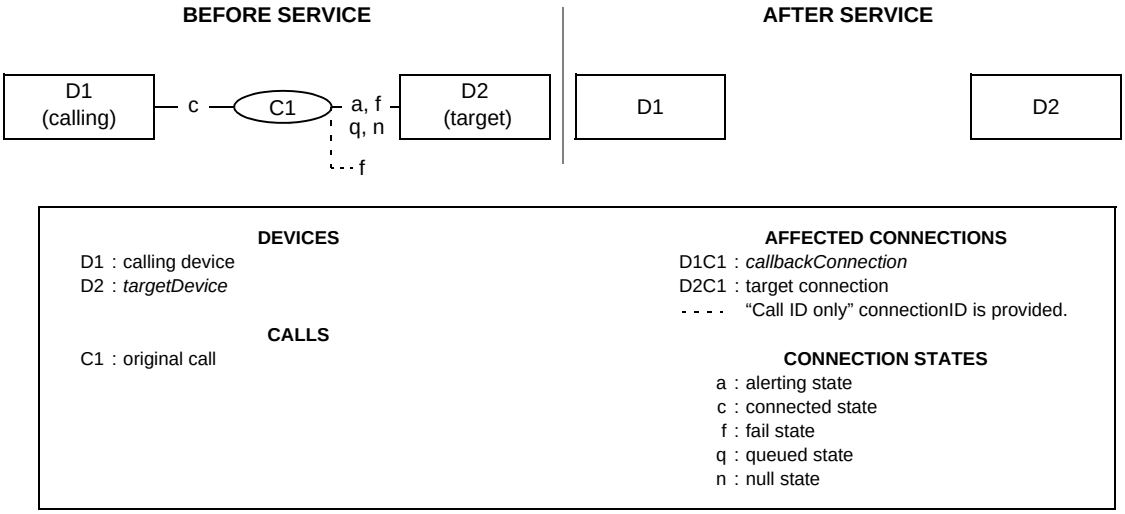

Refer to 6.7.2, “Connection Failure”, on page 71 for a complete description of “Call ID only” connection IDs.

17.1.4.1 Service Request

Table 17-17 Call Back Call-Related —Service Request

Parameter Name	Type	M/ O/C	Description
callbackConnection	ConnectionID	M	Specifies the call back connection at the calling device.
callCharacteristics	CallCharacteristics	O	Specifies the high level characteristics (Priority call, for example) to be associated with the call. See 12.2.4, “CallCharacteristics”, on page 108 for the complete set of possible values. If the supported characteristics cannot be honoured, the switching function shall reject the service request.
subjectOfCall	SubjectOfCall	O	Specifies the subject/intent of the call.
languagePreferences	LanguagePreferences	O	Specifies the language preferences to be associated with the call.
security	CSTASecurityData	O	Specifies timestamp information, message sequence number, and security information.
privateData	CSTAPrivateData	O	Specifies non-standardized information.

17.1.4.2 Service Response

The capability exchange services describe the type of acknowledgement model (atomic or multi-step) that the switching function supports for this service request.

© ISO/IEC 2007 – All rights reserved
Copyright International Organization for Standardization
Provided by IHS under license with ISO
No reproduction or networking permitted without license from IHS
Not for Resale

17.1.4.2.1 Positive Acknowledgement

Table 17-18 Call Back Call-Related—Positive Acknowledgement

Parameter Name	Type	M/O/C	Description
targetDevice	DeviceID	C	Specifies the deviceID of the device that the call back was initiated for. This parameter is mandatory if the switching function supports the Cancel Call Back service, otherwise it is optional.
security	CSTASecurityData	O	Specifies timestamp information, message sequence number, and security information.
privateData	CSTAPrivateData	O	Specifies non-standardized information.

17.1.4.2.2 Negative Acknowledgement

The negative acknowledgement error codes are described in 12.2.14, “ErrorValue”, on page 115.

17.1.4.3 Operational Model

17.1.4.3.1 Connection State Transitions

Table 17-19 Call Back Call-Related —Connection State Transitions

Connection	Initial State (Required)	Final State
D1C1 (callback)	Connected	Null, Fail (see item #1)
D2C1 (called)	Fail, Alerting, Queued, or Null (e.g., null if call was forwarded or deflected from D2)	Null

1. A device may transition to the Fail state prior to Null if the device stays off-hook and receives busy or blocked tone.
2. In the case where a call is forwarded from a called device (busy forwarding, for example), it is switching function dependent if the call back request is placed on the called device or the device that the call was forwarded to.

17.1.4.3.2 Device-Type Monitoring Event Sequences

Table 17-20 Call Back Call-Related—Device-Type Monitoring Event Sequences

Monitored Device	Connection	Event	Event Cause
D1 (calling device)	D2C1 (called)	Connection Cleared (See items #2 and #3)	Call Back or Normal Clearing
	D1C1 (callback)	Connection Cleared (see items #1 and #2)	Call Back or Normal Clearing
		Call Back	
D2 (called device)	D2C1 (called)	Connection Cleared (See items #2 and #3)	Call Back or Normal Clearing

© ISO/IEC 2007 – All rights reserved

Copyright International Organization for Standardization
Provided by IHS under license with ISO
No reproduction or networking permitted without license from IHS
Not for Resale

17.1.4.3.3 Call-Type Monitoring Event Sequences

Table 17-21 Call Back Call-Related—Call-Type Monitoring Event Sequences

Monitored Call	Connection	Event	Event Cause
C1	D2C1 (called)	Connection Cleared (see items #2 and #3)	Call Back or Normal Clearing
	D1C1 (callback)	Connection Cleared (see items #1 and #2)	Call Back or Normal Clearing
	(D1C1)	Call Cleared	Call Back or Normal Clearing

1. If a device stays off-hook and receives busy or blocked tone, the switching function sends the Failed event (event cause of Blocked or Busy) to indicate the status of the device, followed by a Connection Cleared event.
2. The exact sequence of the Connection Cleared events for this service is not specified. This is due to the fact that when multiple devices are removed from a call as a result of the service, each switching function may process the clearing of the devices in a different order.
3. This event is sent only if the connection associated with the called device was created.
4. The event sequence if the call is forwarded or deflected from D2 is not shown.

17.1.4.3.4 Functional Requirements

1. Call Back Call-Related is similar to the Camp On Call service. However for the Call Back Call-Related service the original call is cleared, but for the Camp On Call service, the call is queued.
2. Only one Call Back service request (Call-Related or Non-Call-Related) can be outstanding for any calling and called device pair. It is a switching function option (as indicated by the capability exchange services) if additional Call Back service requests (Call-Related or Non-Call-Related) for that pair result in a positive or negative acknowledgement from the switching function.
3. To cancel a Call Back (Call-Related or Non-Call-Related), the computing function shall issue the Cancel Call Back service, alternatively the Call Back should be manually canceled.

17.1.5 Call Back Message Call-Related C → S

The Call Back Message Call-Related service allows a computing function to request that the switching function leave a pre-defined message requesting that the called device call the calling device. For example, the called device may have been busy when called.

--`,,```,,,,````-`-`,,`,,`,`,,`---
© ISO/IEC 2007 – All rights reserved
Copyright International Organization for Standardization
Provided by IHS under license with ISO
No reproduction or networking permitted without license from IHS
Not for Resale

Figure 17-5 Call Back Message Call-Related Service

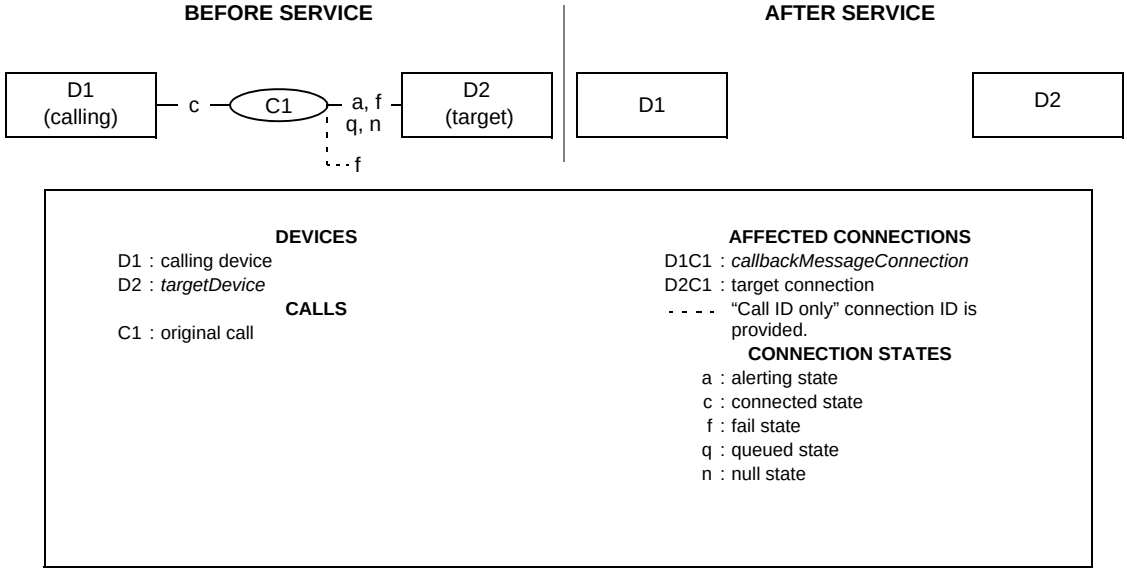

Refer to 6.7.2, “Connection Failure”, on page 71 for a complete description of “Call ID only”connection IDs.

17.1.5.1 Service Request

Table 17-22 Call Back Message Call-Related—Service Request

Parameter Name	Type	M/ O/C	Description
callbackMessageConnection	ConnectionID	M	Specifies the call back message connection at the calling device.
security	CSTASecurityData	O	Specifies timestamp information, message sequence number, and security information.
privateData	CSTAPrivateData	O	Specifies non-standardized information.

17.1.5.2 Service Response

The capability exchange services describe the type of acknowledgement model (atomic or multi-step) that the switching function supports for this service request.

17.1.5.2.1 Positive Acknowledgement

Table 17-23 Call Back Message Call-Related—Positive Acknowledgement

Parameter Name	Type	M/O/ C	Description
targetDevice	deviceID	C	Specifies the deviceID of the device that the call back message was left for. This parameter is mandatory if the switching function supports the Cancel Call Back Message service, otherwise it is optional.
security	CSTASecurityData	O	Specifies timestamp information, message sequence number, and security information.
privateData	CSTAPrivateData	O	Specifies non-standardized information.

© ISO/IEC 2007 – All rights reserved

Copyright International Organization for Standardization
Provided by IHS under license with ISO
No reproduction or networking permitted without license from IHS
Not for Resale

17.1.5.2.2 Negative Acknowledgement

The negative acknowledgement error codes are described in 12.2.14, “ErrorValue”, on page 115.

17.1.5.3 Operational Model

17.1.5.3.1 Connection State Transitions

Table 17-24 Call Back Message Call-Related—Connection State Transitions

Connection	Initial State (Required)	Final State
D1C1 (callbackMessage)	Connected	Null, Fail (see item #1)
D2C1 (called)	Fail, Alerting, Queued, or Null (e.g., null if call was forwarded, deflected from D2)	Null

1. A device may transition to the Fail state prior to Null if the device stays offhook and receives busy or blocked tone.
2. In the case where a call is forwarded from a called device (busy forwarding, for example), it is switching function dependent if the call back request is placed on the called device or the device that the call was forwarded to.

17.1.5.3.2 Device-Type Monitoring Event Sequences

Table 17-25 Call Back Message Call-Related—Device-Type Monitoring Event Sequences

Monitored Device	Connection	Event	Event Cause
D1 (calling device)	D2C1 (called)	Connection Cleared (see items #3 and #4)	Call Back or Normal Clearing
	D1C1 (calling)	Connection Cleared (see items #2 and #4)	Call Back or Normal Clearing
		Call Back Message	
D2 (called device)	D2C1 (called)	Connection Cleared (see items #3 and #4)	Call Back or Normal Clearing

17.1.5.3.3 Call-Type Monitoring Event Sequences

Table 17-26 Call Back Message Call-Related—Call-Type Monitoring Event Sequences

Monitored Call	Connection	Event	Event Cause
C1	D2C1 (called)	Connection Cleared (see items #3 and #4)	Call Back or Normal Clearing
	D1C1 (calling)	Connection Cleared (see items #2 and #4)	Call Back or Normal Clearing
	(D1C1)	Call Cleared	Call Back or Normal Clearing

1. The event sequence if the call is forwarded or deflected from D2 is not shown.
2. If a device stays off-hook and receives busy or blocked tone, the switching function sends the Failed event (event cause of Blocked or Busy) to indicate the status of the device, followed by a Connection Cleared event.
3. This event is sent only if the connection associated with the called device was created.

© ISO/IEC 2007 – All rights reserved

Copyright International Organization for Standardization
Provided by IHS under license with ISO
No reproduction or networking permitted without license from IHS
Not for Resale

4. The exact sequence of the Connection Cleared events for this service is not specified. This is due to the fact that when multiple devices are removed from a call as a result of the service, each switching function may process the clearing of the devices in a different order.

17.1.5.3.4 Functional Requirements

1. Only one Call Back Message service request (Call-Related or Non-Call-Related) can be outstanding for any calling and called device pair. It is a switching function option (as indicated by the capability exchange services) if additional Call Back Message service requests (Call-Related or Non-Call-Related) for that pair result in a positive or negative acknowledgement from the switching function.
2. To cancel a Call Back Message (Call-Related or Non-Call-Related), the computing function shall issue the Cancel Call Back Message service, alternatively the Call Back Message should be manually canceled.
3. The Call Back Message service (Call-Related or Non-Call-Related) differs from the Call Back service in that with the Call Back Message service, the calling device will not call back the called device. Instead, this service leaves a message at the called device.
4. The switching function defines the message left at the called device. A computing function cannot use the service to specify the message content or how the switching function will notify the user (e.g., text message, voice message, indicator only).

17.1.6 Camp On Call

C ⟶ S

The Camp On Call service allows the computing function to queue a call for a device (that typically is busy) until that device becomes available (after finishing a current call or any previously queued calls, for example).

Figure 17-6 Camp On Call Service

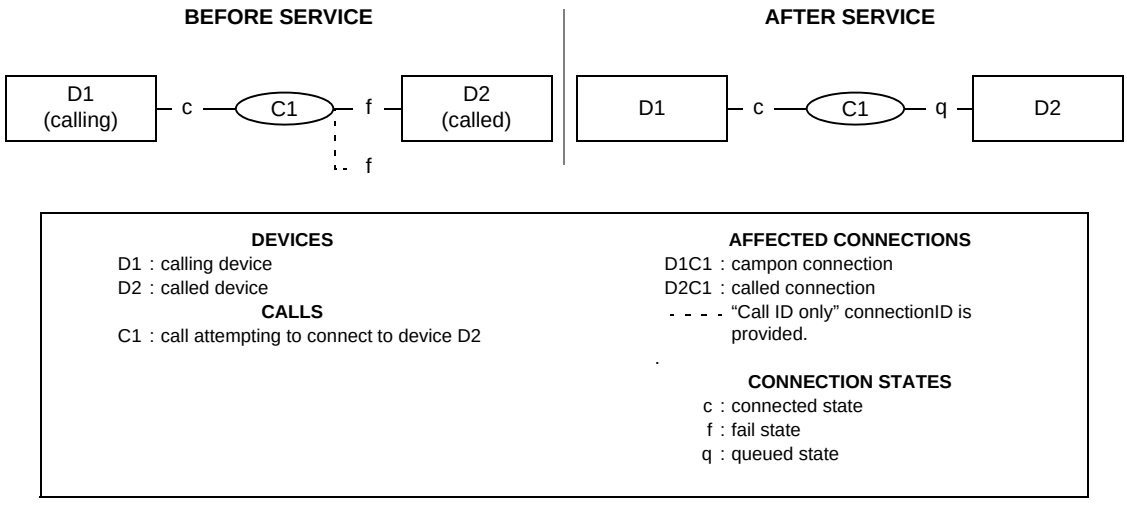

Refer to 6.7.2, “Connection Failure”, on page 71 for a complete description of “Call ID only” connection IDs.

17.1.6.1 Service Request

Table 17-27 Camp On Call—Service Request

Parameter Name	Type	M/ O/C	Description
camponConnection	ConnectionID	M	Specifies the connection of the calling device.

© ISO/IEC 2007 – All rights reserved

Copyright International Organization for Standardization
Provided by IHS under license with ISO
No reproduction or networking permitted without license from IHS
Not for Resale

Table 17-27 Camp On Call—Service Request (continued)

Parameter Name	Type	M/ O/C	Description
security	CSTASecurityData	O	Specifies timestamp information, message sequence number, and security information.
privateData	CSTAPrivateData	O	Specifies non-standardized information.

17.1.6.2 Service Response

The capability exchange services describe the type of acknowledgement model (atomic or multi-step) that the switching function supports for this service request.

17.1.6.2.1 Positive Acknowledgement

Table 17-28 Camp On Call—Positive Acknowledgement

Parameter Name	Type	M/ O/C	Description
security	CSTASecurityData	O	Specifies timestamp information, message sequence number, and security information.
privateData	CSTAPrivateData	O	Specifies non-standardized information.

17.1.6.2.2 Negative Acknowledgement

The negative acknowledgement error codes are described in 12.2.14, “ErrorValue”, on page 115.

17.1.6.3 Operational Model

17.1.6.3.1 Connection State Transitions

Table 17-29 Camp On Call—Connection State Transitions

Connection	Initial State (Required)	Final State
D1C1 (campon)	Connected	Connected
D2C1 (called)	Fail	Queued

17.1.6.3.2 Device-Type Monitoring Event Sequences

Table 17-30 Camp On Call—Device-Type Monitoring Event Sequences

Monitored Device	Connection	Event	Event Cause
D1 (Calling device)	D2C1 (campon)	Queued	Camp On or Camp On Trunks
D2 (Called device)	D2C1 (called)	Queued	Camp On or Camp On Trunks

17.1.6.3.3 Call-Type Monitoring Event Sequences

Table 17-31 Camp On Call—Call-Type Monitoring Event Sequences

Monitored Call	Connection	Event	Event Cause
C1	D2C1 (called)	Queued	Camp On or Camp On Trunks

© ISO/IEC 2007 – All rights reserved

Copyright International Organization for Standardization
Provided by IHS under license with ISO
No reproduction or networking permitted without license from IHS
Not for Resale

17.1.6.3.4 Functional Requirements

1. Only one Camp On Call feature can be active for any calling and called device pair. It is a switching function option (as indicated by the capability exchange services) if additional Camp On Call service requests for that pair result in a positive or negative acknowledgement from the switching function.
2. To cancel a Camp On Call service, the computing function can either:
   - Issue the Clear Connection service or Clear Call service with the campon connection.
   - Have the calling device go on-hook.

   Note that if the Camp On Call service is successfully cancelled, normal call progress messages of Connection Cleared (with an event cause of Normal Clearing) will be generated.

17.1.7 Clear Call

C ⟶ S

The Clear Call service releases all devices from an existing call. In the case of a conference call, this results in all devices in the conference call being released from the call.

Figure 17-7 Clear Call Service

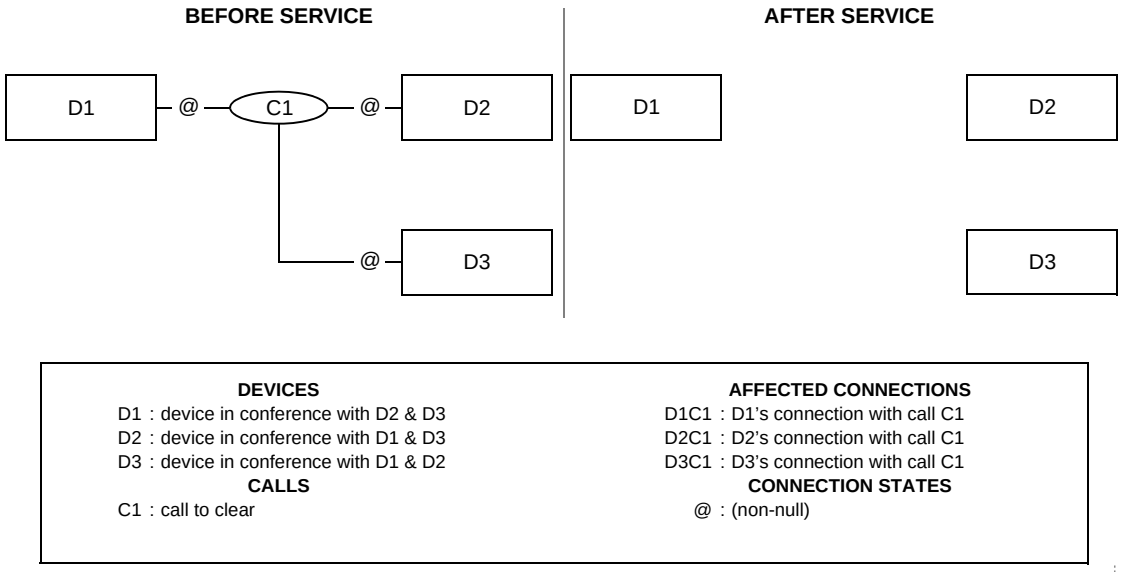

The callToBeCleared connection may be any connection in the call (i.e., D1C1, D2C1, D3C1).

Note that some connections in the call may transit to the Failed state prior to the Null state. See See "Connection State Transitions" on page 232..

17.1.7.1 Service Request

Table 17-32 Clear Call—Service Request

Parameter Name	Type	M/ O/C	Description
callToBeCleared [a]	ConnectionID	M	Specifies the connection to be cleared.
userData	UserData	O	Specifies the user data to be sent to parties in the call.
reason	EventCause	O	Specifies the reason the call is being cleared. See 12.2.15, "EventCause", on page 126 for a list of possible values.

© ISO/IEC 2007 – All rights reserved

Copyright International Organization for Standardization
Provided by IHS under license with ISO
No reproduction or networking permitted without license from IHS
Not for Resale

Table 17-32 Clear Call—Service Request (continued)

Parameter Name	Type	M/ O/C	Description
security	CSTASecurityData	O	Specifies timestamp information, message sequence number, and security information.
privateData	CSTAPrivateData	O	Specifies non-standardized information.

a. The deviceID in the callToBeCleared ConnectionID may be omitted for this service.

17.1.7.2 Service Response

The capability exchange services describe the type of acknowledgement model (atomic or multi-step) that the switching function supports for this service request.

17.1.7.2.1 Positive Acknowledgement

Table 17-33 Clear Call— Positive Acknowledgement

Parameter Name	Type	M/ O/C	Description
security	CSTASecurityData	O	Specifies timestamp information, message sequence number, and security information.
privateData	CSTAPrivateData	O	Specifies non-standardized information.

17.1.7.2.2 Negative Acknowledgement

The negative acknowledgement error codes are described in 12.2.14, “ErrorValue”, on page 115.

17.1.7.3 Operational Model

17.1.7.3.1 Connection State Transitions

Table 17-34 Clear Call—Connection State Transitions

Connection	Initial State (Required)	Final State
D1C1	(Any non-Null state)	Null, Failed (see item # 1)
D2C1	(Any non-Null state)	Null, Failed (see item # 1)
D3C1	(Any non-Null state)	Null, Failed (see item # 1)

1. A connection may transition to the Failed state prior to Null if the device stays off-hook and receives busy or blocked tone. The time between the state transition of Failed --> Null is device and switching function specific and the time may be substantial. Note that the service is completed when all connections transit to either the Null or the Failed state.

17.1.7.3.2 Device-Type Monitoring Event Sequences

Table 17-35 Clear Call—Device-Type Monitoring Event Sequences

Monitored Device	Connection	Event	Event Cause
D1	D1C1	Failed (Optional) (see item #3)	Blocked, or Normal or Busy
		Connection Cleared (see items #1 and #2)	Normal Clearing

© ISO/IEC 2007 – All rights reserved

Copyright International Organization for Standardization
Provided by IHS under license with ISO
No reproduction or networking permitted without license from IHS
Not for Resale

Table 17-35 Clear Call—Device-Type Monitoring Event Sequences (continued)

Monitored Device	Connection	Event	Event Cause
D2	D2C1	Failed (Optional) (see item #3)	Blocked, or Normal or Busy
		Connection Cleared (see items #1 and #2)	Normal Clearing
D3 (and any other devices in call C1)	D3C1	Failed (Optional) (see item #3)	Blocked, or Normal or Busy
		Connection Cleared (see items #1 and #2)	Normal Clearing

17.1.7.3.3 Call-Type Monitoring Event Sequences

Table 17-36 Clear Call—Call-Type Monitoring Event Sequences

Monitored Call	Connection	Event	Event Cause
C1	D1C1	Failed (Optional) (see item #3)	Blocked, or Normal, or Busy
		Connection Cleared (see item #2)	Normal Clearing
	D2C1	Failed (Optional) (see item #3)	Blocked, or Normal, or Busy
		Connection Cleared (see item #2)	Normal Clearing
	D3C1	Failed (Optional) (see item #3)	Blocked, or Normal, or Busy
		Connection Cleared (see item #2)	Normal Clearing
	(D3C1)	Call Cleared, once the last device has left the call. (Note that this event is only sent for call-type monitors.)	Normal Clearing

1. For device-type monitors, it is always guaranteed that the Connection Cleared event associated with the monitored device is provided, and that this is the last Connection Cleared event for the cleared call over the monitor. Depending on how the switching function processes the service request, Connection Cleared events for the other devices in the call may precede this last Connection Cleared event.
2. The exact sequence of the Connection Cleared events for this service is not specified. This is due to the fact that when multiple devices are removed from a call as a result of the service, each switching function may process the clearing of those devices in a different order.
3. If a device stays off-hook and receives busy or blocked tone, the switching function sends the Failed event (event cause of Blocked or Busy) to indicate the status of the device, followed by a Connection Cleared event. The time between the generation of the Failed event and the Connection Cleared event is device and switching function specific and the time may be substantial. As for generation of the Failed event for a given monitor and device in the call, it follows the same conditions as the Connection Cleared events (if the event is supported by the switching function): No events reporting connection transitions for other devices in the call will be sent. However, the Connection Cleared event for the given monitor will be sent (and will be the last event associated with the cleared call sent over that monitor) when the connection transits to Null.

© ISO/IEC 2007 – All rights reserved

Copyright International Organization for Standardization
Provided by IHS under license with ISO
No reproduction or networking permitted without license from IHS
Not for Resale

17.1.7.3.4 Functional Requirements

1. The Clear Call service shall only affect the callToBeCleared ConnectionID's call. Other calls that exist at the callToBeCleared ConnectionID's device remain unaffected.
2. The connection ID provided in the request may consist of only a callID portion. This is an exception to the rule of not providing deviceIDs in connectionIDs of service requests (see 6.1.3, "Connection", on page 49).

17.1.8 Clear Connection

C ⟶ S

The Clear Connection service releases a specific device from a call. In the case of a two-party call, this may result in the call being torn down. In the case of a conference call, this results in the specific party being removed from the conference. This service can also be used to inactivate a bridged appearance.

The Connection ID provided in the request is released.

Figure 17-8 Clear Connection Service

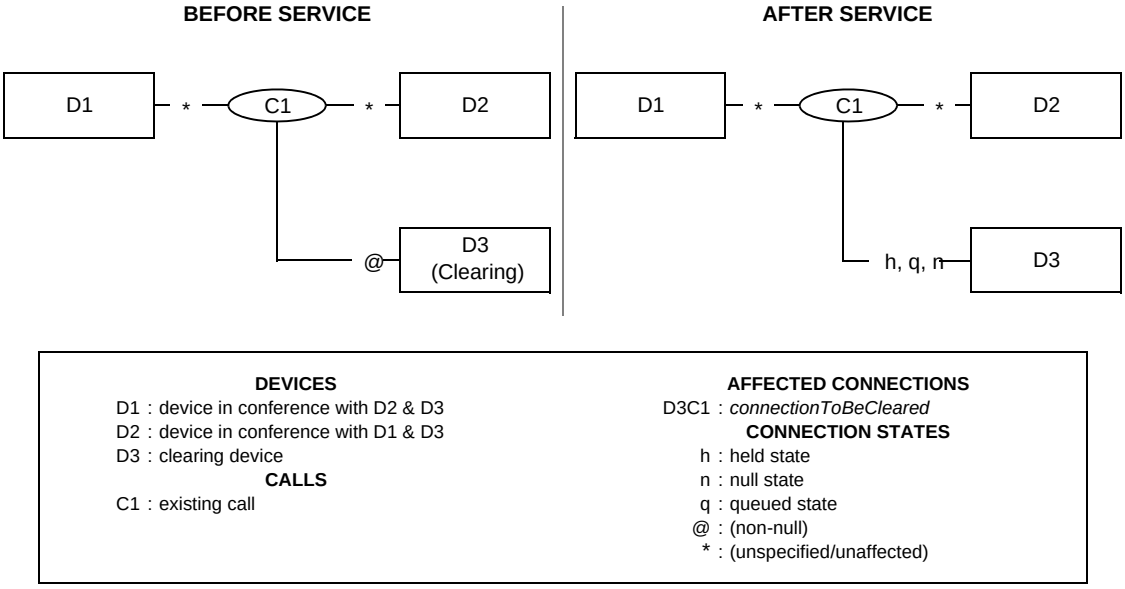

17.1.8.1 Service Request

Table 17-37 Clear Connection—Service Request

Parameter Name	Type	M/ O/C	Description
connectionToBeCleared	ConnectionID	M	Specifies the connection to be cleared.
correlatorData	CorrelatorData	O	Specifies the correlator data to associate with the call.
userData	UserData	O	Specifies the user data to be sent to parties in the call.
reason	EventCause	O	Specifies the reason the connection is being cleared (busy, for example). See 12.2.15, "EventCause", on page 126 for a list of possible values.
security	CSTASecurityData	O	Specifies timestamp information, message sequence number, and security information.
privateData	CSTAPrivateData	O	Specifies non-standardized information.

© ISO/IEC 2007 – All rights reserved
Copyright International Organization for Standardization
Provided by IHS under license with ISO
No reproduction or networking permitted without license from IHS
Not for Resale

17.1.8.2 Service Response

The capability exchange services describe the type of acknowledgement model (atomic or multi-step) that the switching function supports for this service request.

17.1.8.2.1 Positive Acknowledgement

Table 17-38 Clear Connection—Positive Acknowledgement

Parameter Name	Type	M/ O/C	Description
security	CSTASecurityData	O	Specifies timestamp information, message sequence number, and security information.
privateData	CSTAPrivateData	O	Specifies non-standardized information.

17.1.8.2.2 Negative Acknowledgement

The negative acknowledgement error codes are described in 12.2.14, “ErrorValue”, on page 115.

17.1.8.3 Operational Model

17.1.8.3.1 Connection State Transitions

Table 17-39 Clear Connection—Connection State Transitions

Connection	Initial State (Required)	Final State
D3C1 (connectionToBe-Cleared)	(Any non-Null state)	Failed (See item #C), Held (See item #4), Null, Queued (See item #5)
other Connections in call C1 (i.e., D1C1, D2C1)	(Unspecified)	Null, Failed (See item #C).

1. A connection may transition to the Failed state prior to Null if the device stays off-hook and receives busy or blocked tone. The time between the state transition of Failed -> Null is device and switching function specific and the time may be substantial.
2. The Clear Connection service is completed when the connectionToBeCleared connection transits to either the Null, Failed, Held, or Queued state.
3. If the call involves only two connections or the call has parties outside the switching sub-domain, the other connection(s) may transition to Null or Failed. If the call involves more than two connections, the other connections remain unaffected.
4. The Held state is valid when a call is “suspended” for a time period prior to going to Null.
5. The Queued state is only valid for a shared bridged device configuration when there are other appearances connected into the call.

17.1.8.3.2 Device-Type Monitoring Event Sequences

Table 17-40 Clear Connection—Device-Type Monitoring Event Sequences (Generic Case)

Monitored Device	Connection	Event	Event Cause
D3 (clearingdevice)	D3C1 (connectionToBeCleared)	Failed (see item #2)	Blocked, or Normal, or Busy
		Connection Cleared	Normal Clearing
D1	D3C1 (connectionToBe-Cleared)	Failed (see item #2)	Blocked, or Normal, or Busy
		Connection Cleared	Normal Clearing

© ISO/IEC 2007 – All rights reserved

Copyright International Organization for Standardization
Provided by IHS under license with ISO
No reproduction or networking permitted without license from IHS
Not for Resale

Table 17-40 Clear Connection—Device-Type Monitoring Event Sequences (Generic Case) (continued)

Monitored Device	Connection	Event	Event Cause
D2 and any other devices in call C1	D3C1 (connectionToBe-Cleared)	Failed (see item #2)	Blocked, or Normal, or Busy
		Connection Cleared	Normal Clearing

Table 17-41 Clear Connection—Device-Type Monitoring Event Sequences Associated with Shared Bridged Configurations [a]

Monitored Device	Connection	Event	Event Cause
D3 (clearingdevice)	D3C1 (connectionToBeCleared)	Bridged	Normal
D1	D3C1 (connectionToBe-Cleared)	Bridged	Normal
D2 and any other devices in call C1	D3C1 (connectionToBe-Cleared)	Bridged	Normal

a. This event sequence only occurs when an appearance in the device configuration remains connected in the call after the service request.

Table 17-42 Clear Connection—Device-Type Monitoring Event Sequences Associated with Suspend

Monitored Device	Connection	Event	Event Cause
D3 (clearingdevice)	D3C1 (connectionToBeCleared)	Held	Suspend
		Connection Cleared	Normal
D1	D3C1 (connectionToBe-Cleared)	Held	Suspend
		Connection Cleared	Normal
D2 and any other devices in call C1	D3C1 (connectionToBe-Cleared)	Held	Suspend
		Connection Cleared	Normal

17.1.8.3.3 Call-Type Monitoring Event Sequences

Table 17-43 Clear Connection—Call-Type Monitoring Event Sequences (Generic Case)

Monitored Call	Connection	Event	Event Cause
C1	D3C1 (callToBeCleared)	Failed (see item #2)	Blocked, or Normal, or Busy
		Connection Cleared	Normal Clearing
		Call Cleared (see item #1)	

Table 17-44 Clear Connection—Call-Type Monitoring Event Sequences Associated with Shared Bridged Configurations

Monitored Call	Connection	Event	Event Cause
C1	D3C1 (callToBeCleared)	Bridged	Normal

Note that the above sequence only occurs when an appearance in the device configuration remains connected in the call after the service request.

--`,,```,,,,````-`-`,,`,,`,`,,`---
© ISO/IEC 2007 – All rights reserved
Copyright International Organization for Standardization
Provided by IHS under license with ISO
No reproduction or networking permitted without license from IHS
Not for Resale

Table 17-45 Clear Connection—Call-Type Monitoring Event Sequences with Suspend

Monitored Call	Connection	Event	Event Cause
C1	D3C1(callToBeCleared)	Held (see item #3)	Suspend
		Connection Cleared	Normal Clearing
		Call Cleared (see item #1)	Normal

1. For call-type monitors, if the connection being cleared is the last connection in the call then the Call Cleared event will be reported.
2. If a device stays off-hook and receives busy or blocked tone, the switching function sends the Failed event (event cause of Blocked or Busy) to indicate the status of the device, followed by a Connection Cleared event. The time between the generation of the Failed event and the Connection Cleared event is device and switching function specific and the time may be substantial.
3. Prior to going to Null, a switching function may “suspend” a cleared connection (and transition the connection to the Held state) for a time period. The time between the generation of the Held event and the Connection Cleared event is device and switching function specific and the time may be substantial.

17.1.8.3.4 Functional Requirements

1. If the call associated with Clear Connection service has multiple devices that are outside the switching sub-domain, they may remain connected after this service is complete.
2. When the last connected appearance in a shared bridged device configurations is cleared using the Clear Connection service, all other device configurations appearances are also cleared from the call (i.e., Connection Cleared events).
3. The switching function should only accept the Clear Call service request and not the Clear Connection service request if clearing a connection that is involved in a conference call causes the entire conference call to be terminated. However, some switching functions accept a Clear Connection service when it results in an entire conference call to be terminated. The capability exchange services indicate if the switching functions protects or allows a conference call from being torn down via the Clear Connection service.
4. The reason parameter in the service request indicates why a connection is being cleared. This information can be used by the switching function to provide more detailed information why a connection is being cleared via underlying call signalling protocols. For example:
   - When an incoming call arrives at a device (i.e. an Offered event) and the application wants to reject the call because the device is busy, it can provide the reason of “busy”. This allows the underlying signalling protocol (to the external switching sub-domain, for example) to indicate to the calling device that the intended destination is busy. With this information, the calling device might provide a busy indication to its user.

17.1.9 Conference Call

C ⟶ S

The Conference Call service provides a conference of an existing held call and another active call at a conferencing device.

The two calls are merged into a single call and the two connections at the conferencing device are resolved into a single connection. The Connection IDs formerly associated with the conferenced connections are released and a new Connection ID for the resulting connection is created.

The existing held call may consist of two or more devices.

© ISO/IEC 2007 – All rights reserved

Copyright International Organization for Standardization
Provided by IHS under license with ISO
No reproduction or networking permitted without license from IHS
Not for Resale

Figure 17-9 Conference Call Service

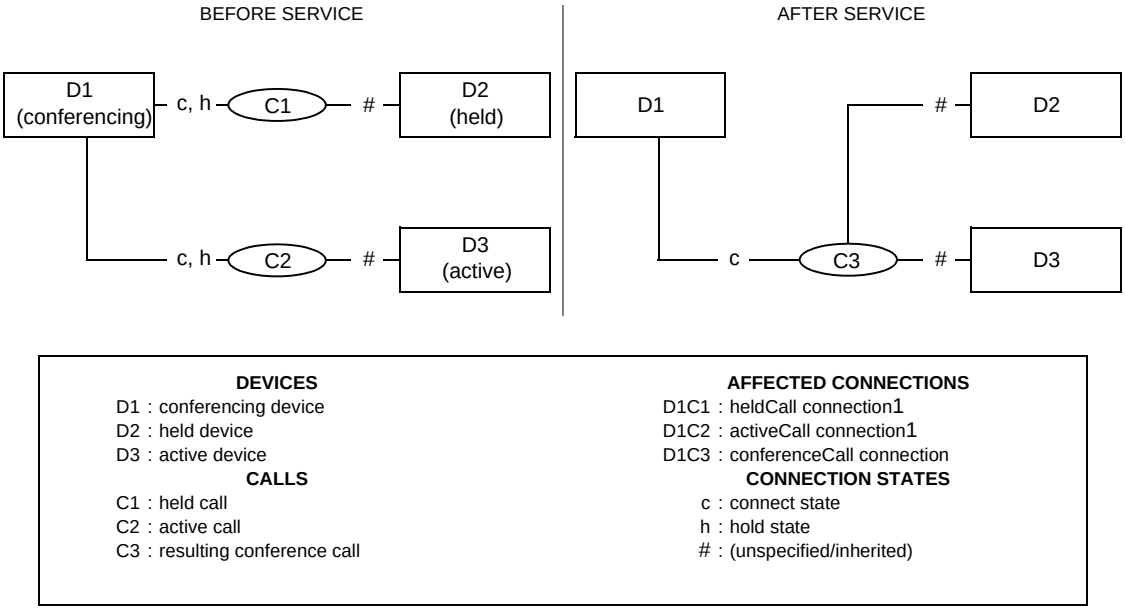

1. See the Connection State Transitions for the appropriate initial states for these connections.

17.1.9.1 Service Request

Table 17-46 Conference Call—Service Request

Parameter Name	Type	M/ O/C	Description
heldCall	ConnectionID	M	Specifies the held connection.
activeCall	ConnectionID	M	Specifies the active connection.
security	CSTASecurityData	O	Specifies timestamp information, message sequence number, and security information.
privateData	CSTAPrivateData	O	Specifies non-standardized information.

In the case where both connections are in the Held state, one connection shall be the heldCall connection and the other connection shall be the activeCall connection.

17.1.9.2 Service Response

The capability exchange services describe the type of acknowledgement model (atomic or multi-step) that the switching function supports for this service request.

17.1.9.2.1 Positive Acknowledgement

Table 17-47 Conference Call—Positive Acknowledgement

Parameter Name	Type	M/ O/C	Description
conferenceCall	ConnectionID	M	Specifies the resulting connection to the new call. The ConnectionID shall have the CallID of the resulting conference call and the DeviceID of the conferencing device.

© ISO/IEC 2007 – All rights reserved
Copyright International Organization for Standardization
Provided by IHS under license with ISO
No reproduction or networking permitted without license from IHS
Not for Resale

Table 17-47 Conference Call—Positive Acknowledgement (continued)

Parameter Name	Type	M/ O/C	Description
connections	ConnectionList	O	Specifies information on each endpoint/ConnectionID that has changed as a result of the service.
conferenceCallInfo	ConnectionInformation	O	Specifies the connection information associated with the conferenceCall connection. If this parameter is not present, then the connection information is switching function specific.
security	CSTASecurityData	O	Specifies timestamp information, message sequence number, and security information.
privateData	CSTAPrivateData	O	Specifies non-standardized information.

17.1.9.2.2 Negative Acknowledgement

The negative acknowledgement error codes are described in 12.2.14, “ErrorValue”, on page 115.

17.1.9.3 Operational Model

17.1.9.3.1 Connection State Transitions

Table 17-48 Conference Call—Connection State Transitions

Connection	Initial State (Required)	Final State
D1C1 (heldCall)	Hold	Null
	Connected, only if activeCall connectionID is in the Connected state.	
D1C2 (activeCall)	Connected	Null
	Hold, only if heldCall connectionID is in the Hold state. See item #2.	
D2C1 and other connections in call C1	(unspecified)	Null
D1C3	Null	Connected
D3C2	(unspecified)	Null
other connections in call C3	Null	(Inherited from the corresponding connections in C1 and C2)

1. New ConnectionIDs will be assigned to all devices that remain in the call due to the Conference. The final connection states of the new ConnectionIDs will be inherited from the states of the corresponding original calls, except for the conferencing device.
2. D1C2 can be in the Hold state, if D1C1 is also in the Hold state. This allows the conferencing of two held calls.

17.1.9.3.2 Device-Type Monitoring Event Sequences

Table 17-49 Conference Call—Device-Type Monitoring Event Sequences

Monitored Device	Connection	Event	Event Cause
D1 (Conferencing device)	(see item #C)	Conferenced	Normal
D2 and any other devices in call C1 (held call)	(see item #C)	Conferenced	Normal

© ISO/IEC 2007 – All rights reserved

Copyright International Organization for Standardization
Provided by IHS under license with ISO
No reproduction or networking permitted without license from IHS
Not for Resale

Table 17-49 Conference Call—Device-Type Monitoring Event Sequences (continued)

Monitored Device	Connection	Event	Event Cause
D3 and any other devices in call C2 (active call	(see item #C)	Conferenced	Normal

17.1.9.3.3 Call-Type Monitoring Event Sequences

Table 17-50 Conference Call—Call-Type Monitoring Event Sequences

Monitored Call	Connection	Event	Event Cause
C1	(see item #C)	Conferenced	Normal
C2	(see item #C)	Conferenced	Normal

1. For Device-Type Monitoring, a Connection Cleared event will not be seen for the activeCall or heldCall ConnectionIDs. The Conferenced event implies that the connections for these calls at this device are cleared.
2. There are multiple connections affected by this service.

17.1.9.3.4 Functional Requirements

1. The Conference service only affects the two calls specified on the service. If other calls exist at the conferencing device, they remain unaffected.
2. To get the connections for each of the devices to their initial states, the computing function can:
   - Use the Consultation Call service to place a call on hold and place a new call.
   - Use the Alternate Call service to place a call on hold and answer an alerting call.

   In either of these cases, if the switching function supports the consultOptions parameter in these services, the computing function shall provide this parameter with a value of either “Conference Only” or “Unrestricted”.

   Some switching function support a third approach for preparing for the Conference Call service involving the use of a hold service followed by a Make Call.

   The fourth approach supported by some switching functions involves two held calls at the same device.

   Certain switching functions also support a fifth approach involving two active calls at the same device.

   The computing function should use the capabilities exchange services to determine which of these approaches is supported by the switching function.
3. If the computing function uses the Consultation Call service to specify the consultOptions parameter with a value of Transfer, and then attempts to complete the consultation call with a Conference Call service, it will be rejected with a negative acknowledgement.
4. The appearances in a shared bridged device configuration are unaffected by this service.
5. The maximum number of devices in a conference is subject to switching function limits.
6. The computing function should never assume the reuse of callIDs, although some switching functions may reuse one or the other.

© ISO/IEC 2007 – All rights reserved

Copyright International Organization for Standardization
Provided by IHS under license with ISO
No reproduction or networking permitted without license from IHS
Not for Resale

17.1.10 Consultation Call

C → S

The Consultation Call service places an existing active call at a device on hold and initiates a new call from the same device. The existing active call may include two or more devices.

Figure 17-10 Consultation Call Service—Case A: Complete Dialling Sequence Provided

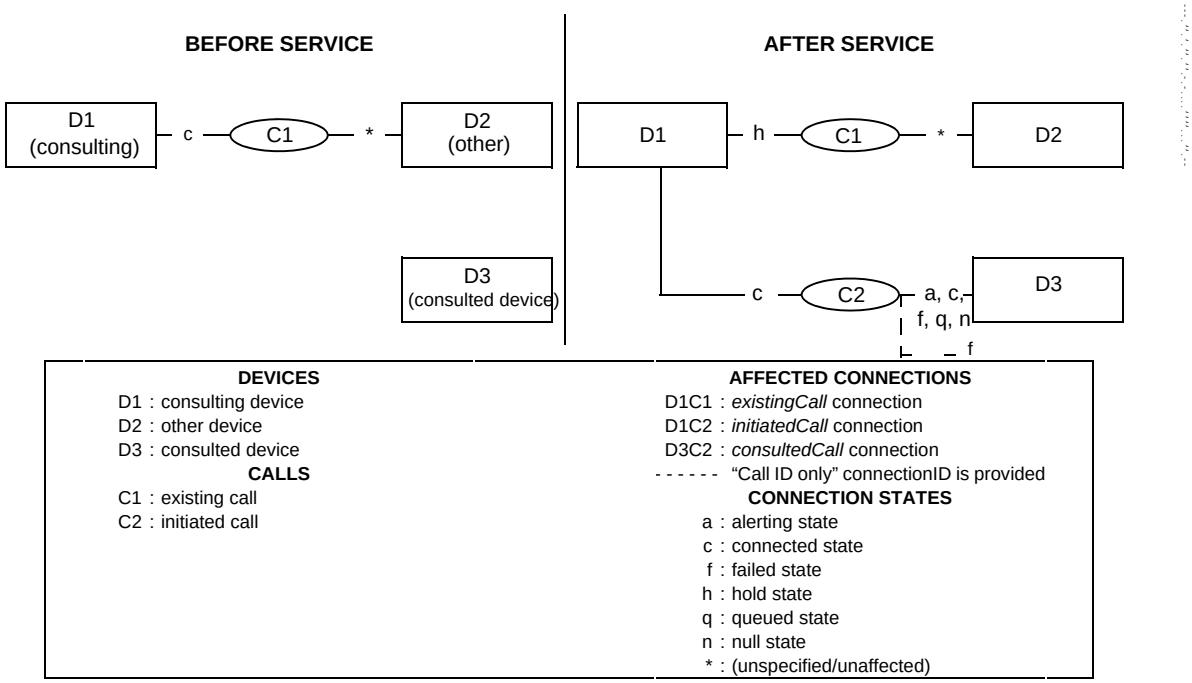

Figure 17-11 Consultation Call Service—Case B: Partial Dialling Sequence Provided

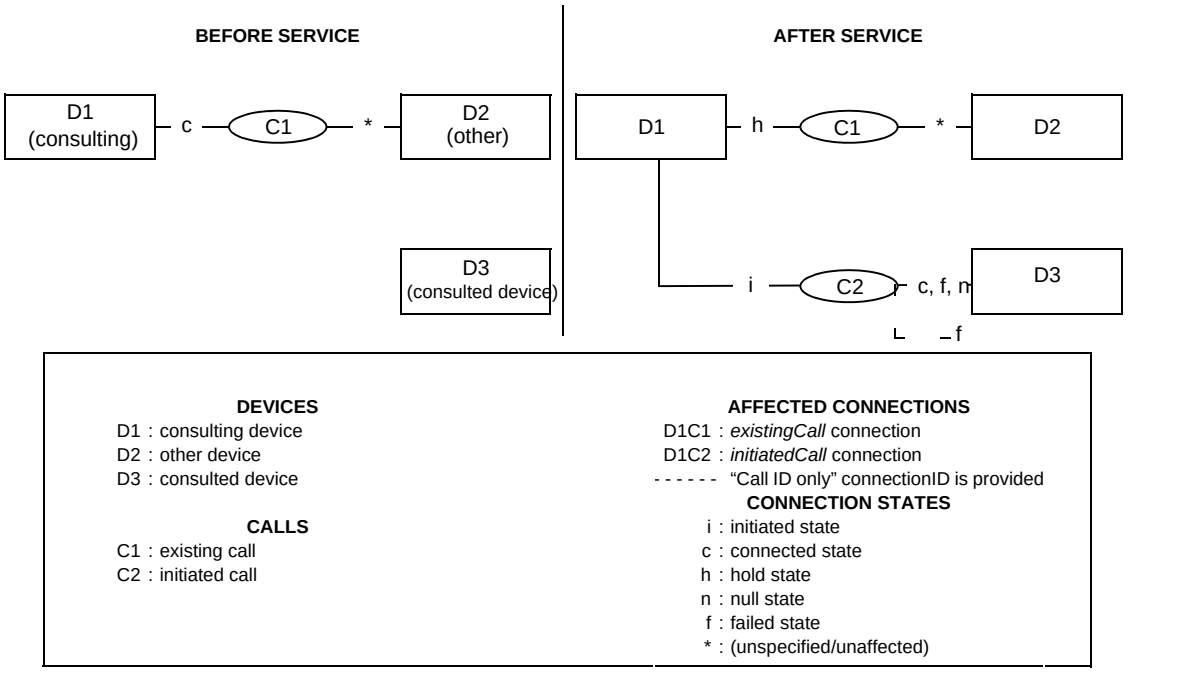

Note that connected state (D3C2) exists when D3 is a NID.

© ISO/IEC 2007 – All rights reserved

Copyright International Organization for Standardization
Provided by IHS under license with ISO
No reproduction or networking permitted without license from IHS
Not for Resale

Refer to 6.7.2, “Connection Failure”, on page 71 for a complete description of “Call ID only” connection IDs.

17.1.10.1 Service Request

Table 17-51 Consultation Call—Service Request

Parameter Name	Type	M/ O/C	Description
existingCall	ConnectionID	M	Specifies the active connection.
consultedDevice	DeviceID	M	Specifies the device to be consulted.
connectionReservation	Boolean	O	Specifies that the media stream channel(s) associated with the call being placed on hold be reserved for reuse at a later time. The complete set of possible values is: • True - channel(s) is to be reserved. • False - channel(s) is not to be reserved (default).
accountCode	AccountInfo	O	Specifies the account code to associate with the consulted call.
authCode	AuthCode	O	Specifies the authorization code to allow the call.
correlatorData	CorrelatorData	O	Specifies the correlator data to associate with the call.
userData	UserData	O	Specifies the user data to be sent to parties in the call.
callCharacteristics	CallCharacteristics	O	Specifies the high level characteristics (Priority call, for example) to be associated with the call. See 12.2.4, “CallCharacteristics”, on page 108 for the complete set of possible values. If the supported characteristics cannot be honoured, the switching function shall reject the service request.
mediaCallCharacteristics	MediaCallCharacteristics	O	This specifies the media characteristics to be associated with the call being made for the consultation. If this parameter is not present then the media class is Voice.
callingConnectionInfo	ConnectionInformation	O	This specifies the connection information needed for the creation of the new connection at the consulting device. If this parameter is not present then the connection information is switching function specific.
consultOptions	Enumerated	O	This parameter indicates the potential actions following the Consultation Call so that certain facilities can be allocated prior to a Transfer or Conference. The complete set of possible values is: • Consult Only • Transfer Only • Conference Only • Unrestricted (default) If the switching function supports this parameter, the computing function shall supply one of the values supported. If the switching function does not support this parameter, the implicit value is “Unrestricted”. This parameter does not indicate a restriction or otherwise affect the switching function’s capabilities in any way with respect to services other than Transfer or Conference.
subjectOfCall	SubjectOfCall	O	Specifies the subject/intent of the call.
languagePreferences	LanguagePreferences	O	Specifies the language preferences to be associated with the call.
security	CSTASecurityData	O	Specifies timestamp information, message sequence number, and security information.

© ISO/IEC 2007 – All rights reserved

Copyright International Organization for Standardization
Provided by IHS under license with ISO
No reproduction or networking permitted without license from IHS
Not for Resale

Table 17-51 Consultation Call—Service Request (continued)

Parameter Name	Type	M/ O/C	Description
privateData	CSTAPrivateData	O	Specifies non-standardized information.

17.1.10.2 Service Response

The capability exchange services describe the type of acknowledgement model (atomic or multi-step) that the switching function supports for this service request.

17.1.10.2.1 Positive Acknowledgement

Table 17-52 Consultation Call—Positive Acknowledgement

Parameter Name	Type	M/ O/C	Description
initiatedCall	ConnectionID	M	Specifies the initial connection to the new call. The ConnectionID shall have the CallID of the resulting new call and the DeviceID of the consulting device.
mediaCallCharacteristics	MediaCallCharacteristics	C	This specifies the adjusted media characteristics for the call being made for the consultation. This parameter shall be provided if the media characteristics have been adjusted, otherwise the parameter is optional.
initiatedCallInfo	ConnectionInformation	O	This specifies the adjusted connection information used during the creation of the initiatedCall for the consulting device. If this parameter is not present then the connection information is switching function specific.
security	CSTASecurityData	O	Specifies timestamp information, message sequence number, and security information.
privateData	CSTAPrivateData	O	Specifies non-standardized information.

17.1.10.2.2 Negative Acknowledgement

The negative acknowledgement error codes are described in 12.2.14, “ErrorValue”, on page 115.

17.1.10.3 Operational Model

17.1.10.3.1 Connection State Transitions

Table 17-53 Consultation Call—Connection State Transitions

Connection	Initial State (Required)	Final State
D1C1 (existingCall)	Connected	Hold
D1C2 (initiatedCall)	Null	Initiated, Connected
D3C2 (consulted device)	Null	Alerting, Connected, Queued, Fail, or Null (Null if call moves away from the D3 (i.e., forwarded)).
Other connections in call C1 (existingCall) (i.e., D2C1)	(Unspecified)	(Unaffected; no transition due to this service).

1. When providing a partial dialling sequence (Case B), the connected state, for Device D3, only applies to external outbound calls. It indicates that enough of the dial string has been communicated for the switching function to connect the call to the network interface device that will be associated with the called device in the external network.

--`,,```,,,,````-`-`,,`,,`,`,,`---

© ISO/IEC 2007 – All rights reserved

Copyright International Organization for Standardization
Provided by IHS under license with ISO
No reproduction or networking permitted without license from IHS
Not for Resale

17.1.10.3.2 Device-Type Monitoring Event Sequences

There are two types of Device-Type Monitoring Event sequences depending on the dialling sequence used for the called device.

- Case A: The dialling sequence for the called device is the complete sequence for the device.

Table 17-54 Consultation Call—Device-Type Monitoring Event Sequences (Case A)

Monitored Device	Connection	Event	Event Cause
D1 (consulting device)	D1C1	Held	Normal or Consultation or Conference or Transfer [a]
	D1C2	Service Initiated (optional)	Consultation or Conference or Transfer [a]
	D1C2	Originated	Consultation or Conference or Transfer [a]
	D3C2	Events depend on the type of consulted device (ACD, extension, external device, etc.) and features activated at it at the time of this service (Forward, Do Not Disturb, etc.). [b]	
D2 and any other devices in C1 (original call)	D1C1	Held	Normal or Consultation or Conference or Transfer [a]
D3 (consulted device)	D3C2	Events depend on the type of consulted device (ACD, extension, external device, etc.) and features activated at it at the time of this service (Forward, Do Not Disturb, etc.). [b]	

a. The Conference event cause will only be present when the consultOptions parameter is set to “Conference Only.” The Transfer event cause will only be present when the consultOptions parameter is set to “Transfer Only.”

b. Providing of these events by the switching function does not affect the service completion conditions (i.e., a service is considered complete without these events being provided).

- Case B: The dialling sequence for the called device is a partial sequence for the device.

Table 17-55 Consultation Call—Device-Type Monitoring Event Sequences (Case B)

Monitored Device	Connection	Event	Event Cause
D1 (consulting device)	D1C1	Held	Normal or Consultation or Conference or Transfer [a]
	D1C2	Service Initiated (optional)	Consultation or Conference or Transfer [a]
	D1C2	Digits Dialled	Consultation or Conference or Transfer [a]
	D3C2	Events depend on the type of consulted device (ACD, extension, external device, etc.) and features activated at it at the time of this service (Forward, Do Not Disturb, etc.). [b]	
D2 and any other devices in C1 (original call)	D1C1	Held	Normal or Consultation or Conference or Transfer [a]
D3 (consulted device)	D3C2	Events depend on the type of consulted device (ACD, extension, external device, etc.) and features activated at it at the time of this service (Forward, Do Not Disturb, etc.). [b]	

a. The Conference event cause will only be present when the consultOptions parameter is set to “Conference Only.” The Transfer event cause will only be present when the consultOptions parameter is set to “Transfer Only.”

b. Providing of these events by the switching function does not affect the service completion conditions (i.e., a service is considered complete without these events being provided).

© ISO/IEC 2007 – All rights reserved

Copyright International Organization for Standardization
Provided by IHS under license with ISO
No reproduction or networking permitted without license from IHS
Not for Resale

17.1.10.3.3 Call-Type Monitoring Event Sequences

There are two types of Device-Type Monitoring Event sequences depending on the dialling sequence used for the called device.

- Case A: The dialling sequence for the called device is the complete sequence for the device.

Table 17-56 Consultation Call—Call-Type Monitoring Event Sequences (Case A)

Monitored Call	Connection	Event	Event Cause
C1 (original call)	D1C1	Held	Normal or Consultation or Conference or Transfer [a]
C2 (initiated call)	D1C2	Service Initiated (optional)	Consultation or Conference or Transfer [a]
	D1C2	Originated	Consultation or Conference or Transfer [a]
	D3C2	Events depend on the type of consulted device (ACD, extension, external device, etc.) and features activated at it at the time of this service (Forward, Do Not Disturb, etc.). [b]	

a. The Conference event cause will only be present when the consultOptions parameter is set to “Conference Only.” The Transfer event cause will only be present when the consultOptions parameter is set to “Transfer Only.”

b. Providing of these events by the switching function does not affect the service completion conditions (i.e., a service is considered complete without these events being provided).

- Case B: The dialling sequence for the called device is a partial sequence for the device.

Table 17-57 Consultation Call—Call-Type Monitoring Event Sequences (Case B)

Monitored Call	Connection	Event	Event Cause
C1 (original call)	D1C1	Held	Normal or Consultation or Conference or Transfer [a]
C2 (initiated call)	D1C2	Service Initiated (optional)	Consultation or Conference or Transfer [a]
	D1C2	Digits Dialled	Consultation or Conference or Transfer [a]
	D3C2	Events depend on the type of consulted device (ACD, extension, external device, etc.) and features activated at it at the time of this service (Forward, Do Not Disturb, etc.). [b]	

a. The Conference event cause will only be present when the consultOptions parameter is set to “Conference Only.” The Transfer event cause will only be present when the consultOptions parameter is set to “Transfer Only.”

b. Providing of these events by the switching function does not affect the service completion conditions (i.e., a service is considered complete without these events being provided).

17.1.10.3.4 Functional Requirements

1. For the consultedDevice, all active features for this device will be honoured while the call is being made to it.
2. The consultOptions parameter indicates the potential action following the Consultation Call service so that certain facilities can be allocated if a transfer or conference is desired. If the switching function supports the consultOptions parameter, the computing function shall provide one of the supported values of this parameter obtained through the capability exchange services. If the switching function is unable to allocate the facilities for the requested Transfer or Conference, it will reject the Consultation Call service

© ISO/IEC 2007 – All rights reserved

Copyright International Organization for Standardization
Provided by IHS under license with ISO
No reproduction or networking permitted without license from IHS
Not for Resale

request. This parameter does not indicate a restriction or otherwise affect the switching function's capabilities in any way with respect to services other than Transfer or Conference.

3. It is switching function specific whether a switching function may still accept a request for a Conference or Transfer if the consultOptions of Conference or Transfer was not requested as part of the Consultation Call service.

4. If the computing function specifies the consultOptions parameter with a value of Conference, then the computing function can not complete the consultation with a Transfer Call service or transfer feature.

5. If the computing function specifies the consultOptions parameter with a value of Transfer, then the computing function can not complete the consultation with a Conference Call service or conference feature.

6. The consultedDevice parameter may contain a device identifier of null or contain a Diallable Digits format (DD) device identifier that has a partial dialling sequence character (i.e., the ";" character) at the end of it. When this parameter is used in this manner, the computing function is indicating that it wishes to stage the dialling sequence. The completion of the dialling sequence can be accomplished either by entering the rest of the sequence manually at the actual device or the computing function can use the Dial Digits service to complete the sequence. As for the other types of consultedDevice parameter, they shall contain a complete dialling sequence. The switching function may have a time-out period for multi-stage dialling. If the dialling sequence does not complete prior to this timeout, it may either abort the call or attempt to use the digits already dialled and signal that dialling is complete with an originated event.

7. If the Consultation Call service is used to initiate a multistage dialling sequence, the computing function is signalled to continue the dialling sequence via either the Service Initiated event (i.e., the consultedDevice is Null) or the Digits Dialled event (i.e., the consultedDevice has a partial dialling sequence character).

8. A feature of initiating a digital data call as a result of this service (i.e., initiatedCall) is that the switching function may or may not adjust the digital data characteristics (e.g., connection rate) and connection information (e.g., number of channels) that were supplied on the Consultation Call service request (Use the capabilities exchange services to determine which feature the switching function supports). If the switching function does not support the adjusting of the characteristics/connection information, the service request will be rejected with an appropriate error code in the negative acknowledgement. If the switching function does support the adjusting of the characteristics/connection information, the positive acknowledgement will contain the adjusted value or values. If the computing function determines that the adjusted values are not adequate, it can terminate the digital data call (e.g., Clear Call).

9. If the computing function makes a digital data call using this service and wants to also bind a particular Media Service to the call, then the computing function shall use the Media Attach service.

17.1.11 Deflect Call

C ⟶ S

The Deflect Call service allows the computing function to divert a call to another destination that may be inside or outside the switching sub-domain.

--`,,```,,,,````-`-`,,`,,`,`,,`---
© ISO/IEC 2007 – All rights reserved
Copyright International Organization for Standardization
Provided by IHS under license with ISO
No reproduction or networking permitted without license from IHS
Not for Resale

Figure 17-12 Deflect Call Service

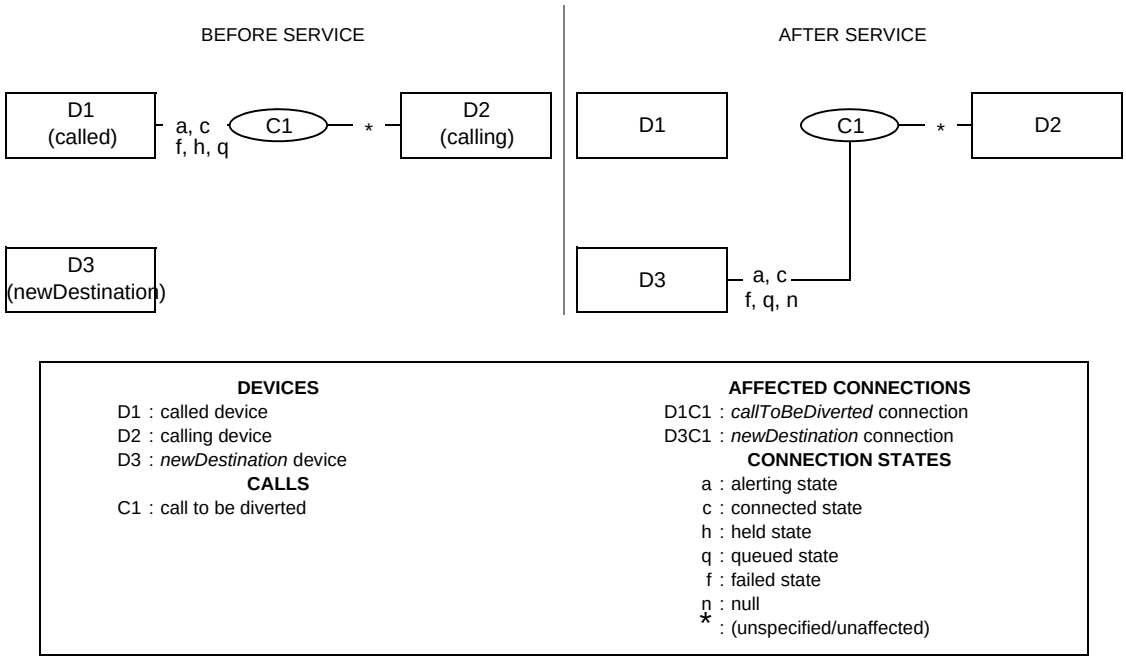

Note that D1 may also be the calling device.

17.1.11.1 Service Request

Table 17-58 Deflect Call—Service Request

Parameter Name	Type	M/ O/C	Description
callToBeDiverted	ConnectionID	M	Specifies the connection to be diverted.
newDestination	DeviceID	M	Specifies the device to which the call is to be diverted (newDestination device).
correlatorData	CorrelatorData	O	Specifies the correlator data to associate with the call.
userData	UserData	O	Specifies the user data to be sent to parties in the call.
subjectOfCall	SubjectOfCall	O	Specifies the subject/intent of the call.
languagePreferences	LanguagePreferences	O	Specifies the language preferences to be associated with the call.
reason	EventCause	O	Specifies the reason the connection is being diverted. See 12.2.15, “EventCause”, on page 126 for a list of possible values.
security	CSTASecurityData	O	Specifies timestamp information, message sequence number, and security information.
privateData	CSTAPrivateData	O	Specifies non-standardized information.

17.1.11.2 Service Response

The capability exchange services describe the type of acknowledgement model (atomic or multi-step) that the switching function supports for this service request.

© ISO/IEC 2007 – All rights reserved

Copyright International Organization for Standardization
Provided by IHS under license with ISO
No reproduction or networking permitted without license from IHS
Not for Resale

17.1.11.2.1 Positive Acknowledgement

Table 17-59 Deflect Call—Positive Acknowledgement

Parameter Name	Type	M/ O/C	Description
security	CSTASecurityData	O	Specifies timestamp information, message sequence number, and security information.
privateData	CSTAPrivateData	O	Specifies non-standardized information.

17.1.11.2.2 Negative Acknowledgement

The negative acknowledgement error codes are described in 12.2.14, “ErrorValue”, on page 115.

17.1.11.3 Operational Model

17.1.11.3.1 Connection State Transitions

Table 17-60 Deflect Call—Connection State Transitions

Connection	Initial State (Required)	Final State
D1C1 (callToBeDiverted)	Alerting, Connected, Failed, Held, Queued	Null
D2C1 (calling device)	(Unspecified)	Unaffected; no transition due to this service.
D3C1 (newDestination)	Null	Alerting, Connected, Queued, Fail, or Null (Null if call moves away from D3 (i.e., forwarded)).

17.1.11.3.2 Device-Type Monitoring Event Sequences

Table 17-61 Deflect Call—Device-Type Monitoring Event Sequences

Monitored Device	Connection	Event	Event Cause
D1 (called device)	D1C1 (callToBeDiverted)	Diverted (see item #3)	Redirected or Normal
D2 (calling device)	D1C1	Diverted (optional) (see items #2 and #3)	Redirected or Normal
	D3C1	Events depend on the type of device (ACD, extension, external device, etc.) and features activated at it at the time of this service (Forward, Do Not Disturb, etc.). (see item #4)	
D3 (newDestination device)	D3C1	Events depend on the type of device (ACD, extension, external device, etc.) and features activated at it at the time of this service (Forward, Do Not Disturb, etc.). (see item #4)	

© ISO/IEC 2007 – All rights reserved

Copyright International Organization for Standardization
Provided by IHS under license with ISO
No reproduction or networking permitted without license from IHS
Not for Resale

17.1.11.3.3 Call-Type Monitoring Event Sequences

Table 17-62 Deflect Call—Call-Type Monitoring Event Sequences

Monitored Call	Connection	Event	Event Cause
C1	D1C1	Diverted (optional) (see items #1 and #3)	Redirected or Normal
	D3C1	Events depend on the type of device (ACD, extension, external device, etc.) and features activated at it at the time of this service (Forward, Do Not Disturb, etc.). (see item #4)	

1. The switching function provides the Diverted event for C1 only if it is providing Diverted events for call-type monitors. This is indicated through the capabilities exchange services.
2. The switching function provides the Diverted event for D2 only if it is providing Diverted events for all devices in the call. This is indicated through the capabilities exchange services.
3. A Connection Cleared Event will not be provided for D1 (called device). The Diverted event implies the ConnectionID has gone to Null.
4. Providing of these events by the switching function does not affect the service completion conditions (i.e., a service is considered complete without these events being provided).

17.1.11.3.4 Functional Requirements

1. The Deflect Call service differs from the (Directed and Group) Pickup services in that the Pickup services redirects a call from a device and connects it to a specified device.
2. The Deflect Call service only affects the callToBeDiverted ConnectionID's call. If other calls exist at the callToBeDiverted ConnectionID's device, they remain unaffected.
3. For the newDestination, all active features for this device will be honoured while the call is being deflected to it. For example, due to active features at the called device, the call may or may not be deflected to the new destination device.
4. As a result of the Deflect Call service, the call ID associated with this call remains unchanged.
5. If the callToBeDiverted connection identifier is associated with a shared bridged device configuration appearance in the queued state (i.e., inactive mode), then the service request will be rejected with a negative acknowledgement.
6. This service request does not support the use of a null device identifier or a Diallable Digits format (DD) device identifier that has a partial dialling sequence character (i.e., the ";" character) in it for the newDestination parameter. A complete and valid device identifier shall be provided, otherwise the switching function will reject the service request with a negative acknowledgement.
7. If this service is used to deflect a digital data call, the connection for the newDestination will inherit the characteristics of the call.

17.1.12 Dial Digits

C ⟶ S

The Dial Digits service allows the computing function to perform a dialling sequence that is associated with a call that has already been initiated (i.e., has manually gone off-hook or has been initiated via a Make Call or Consultation Call service). This service is also used to perform the dialling sequences associated with completing a multi-stage dialled call.

© ISO/IEC 2007 – All rights reserved

Copyright International Organization for Standardization
Provided by IHS under license with ISO
No reproduction or networking permitted without license from IHS
Not for Resale

Figure 17-13 Dial Digits Service

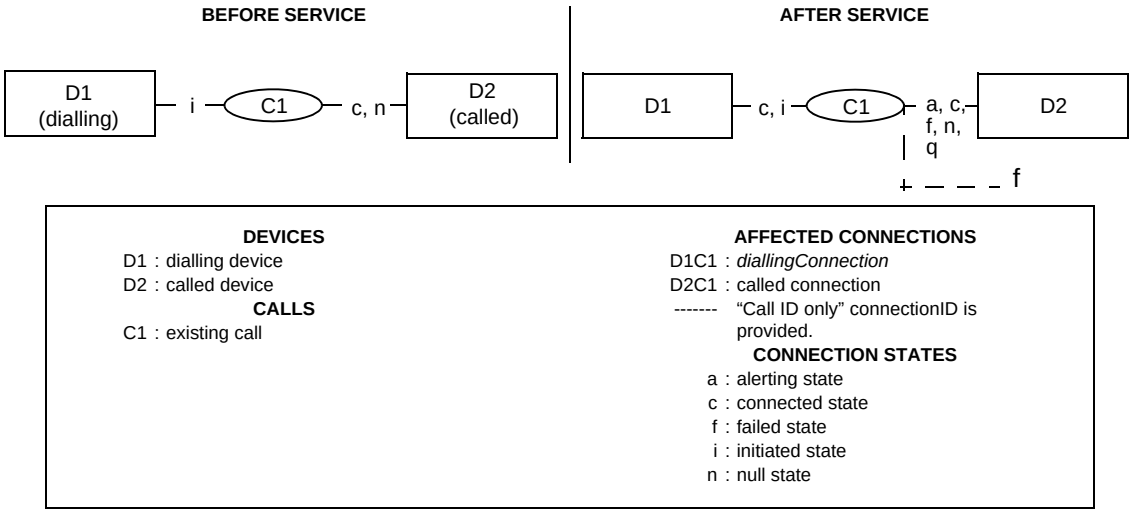

Note that the initial state of connected for connection D2C1 exists when D2 is a NID.

Refer to 6.7.2, "Connection Failure", on page 71 for a complete description of "Call ID only" connection IDs.

17.1.12.1 Service Request

Table 17-63 Dial Digits—Service Request

Parameter Name	Type	M/ O/C	Description
diallingConnection	ConnectionID	M	Specifies the connection which is dialling the digits.
diallingSequence	DeviceID	M	Specifies the actual string of digits to be dialled. To specify a partial dialling sequence, the Diallable Digits format (DD) of the DeviceID with the ";" character as the last digit in the string shall be used.
correlatorData	CorrelatorData	O	Specifies the correlator data to associate with the call.
security	CSTASecurityData	O	Specifies timestamp information, message sequence number, and security information.
privateData	CSTAPrivateData	O	Specifies non-standardized information.

17.1.12.2 Service Response

The capability exchange services describe the type of acknowledgement model (atomic or multi-step) that the switching function supports for this service request.

17.1.12.2.1 Positive Acknowledgement

Table 17-64 Dial Digits—Positive Acknowledgement

Parameter Name	Type	M/ O/C	Description
security	CSTASecurityData	O	Specifies timestamp information, message sequence number, and security information.
privateData	CSTAPrivateData	O	Specifies non-standardized information.

--`,,```,,,,````-`-`,,`,,`,`,,`---
© ISO/IEC 2007 – All rights reserved
Copyright International Organization for Standardization
Provided by IHS under license with ISO
No reproduction or networking permitted without license from IHS
Not for Resale

17.1.12.2.2 Negative Acknowledgement

The negative acknowledgement error codes are described in 12.2.14, “ErrorValue”, on page 115.

17.1.12.3 Operational Model

17.1.12.3.1 Connection State Transitions

Table 17-65 Dial Digits—Connection State Transitions

Connection	Initial State (Required)	Final State
D1C1 (dialling)	Initiated	Initiated, Connected
D2C1 (called)	Null, Connected (The connected state only applies to external outbound calls. It indicates that enough of the dial string has been communicated for the switching function to connect the call to the network interface device that will be associated with the called device in the external network.)	Alerting, Connected, Failed, Queued, or Null (Null if call moves away from D3 (i.e., forwarded).

17.1.12.3.2 Device-Type Monitoring Event Sequences

Table 17-66 Dial Digits—Device-Type Monitoring Event Sequences

Monitored Device	Connection	Event	Cause Code
D1 (dialling device)	D1C1	Digits Dialled (see item #1)	Normal or Network Dialling
	D1C1	Originated (when the dialling sequence is complete and the D1C1 connection is connected into the call (i.e., D1C1 final state = connected).	Normal or Network Dialling
	D2C1	Events depend on the type of device (ACD, extension, external device, etc.) and features activated at it at the time of this service (Forward, Do Not Disturb, etc.). (see item #2)	
D2 (called device)	D2C1	Events depend on the type of device (ACD, extension, external device, etc.) and features activated at it at the time of this service (Forward, Do Not Disturb, etc.). (see item #2)	

© ISO/IEC 2007 – All rights reserved

Copyright International Organization for Standardization
Provided by IHS under license with ISO
No reproduction or networking permitted without license from IHS
Not for Resale

17.1.12.3.3 Call-Type Monitoring Event Sequences

Table 17-67 Dial Digits—Call-Type Monitoring Event Sequences

Monitored Call	Connection	Event	Cause Code
C1	D1C1	Digits Dialled (see item #1)	Normal or Network Dialling
	D1C1	Originated (when the dialling sequence is complete and the D1C1 connection is connected into the call (i.e., D1C1 final state = connected).	Normal or Network Dialling
	D2C1	Events depend on the type of device (ACD, extension, external device, etc.) and features activated at it at the time of this service (Forward, Do Not Disturb, etc.). (see item #2)	

1. This event will be provided for each diallable digits segment received by the switching function.
2. Providing of these events by the switching function does not affect the service completion conditions (i.e., a service is considered complete without these events being provided).

17.1.12.3.4 Functional Requirements

1. The Dial Digits service only effects the diallingConnection call. If other calls exist at the diallingConnection Connection ID's device, they remain unaffected.
2. This service can not be used to generate DTMF tones on an existing connected call. The Generate Digits service is used for this. This service is only used to perform the dialling sequences for placing a call (i.e., outbound dialling).
3. If no digits have been dialled for the diallingConnection through the original Make Call service or a previous Dial Digits service, the diallingSequence parameter can be any format of device identifier. Otherwise the diallingSequence parameter shall be in Diallable Digits format.
4. If the diallingSequence parameter is intended to provide just a portion of a longer dialling sequence to follow, then it shall be in Diallable Digits format with the last character of the sequence being ";". Otherwise the diallingSequence parameter will be interpreted as the last in the dialling sequence for the diallingConnection.
5. The premature termination of a dialling sequence can be done by either using the Clear Connection service, Clear Call service, or having the dialling connection manually cleared.
6. The switching function may have a time-out period for multi-stage dialling. If the dialling sequence does not complete prior to this timeout, it may either abort the call or attempt to use the digits already dialled and signal that dialling is complete with an originated event.
7. If the switching function determines that dialling is complete even if a ";" was supplied, it will originate the call and ignore any subsequent digits.

17.1.13 Directed Pickup Call

C ⟶ S

The Directed Pickup Call service moves a specified call and connects it at a new specified destination.

This results in the connection being diverted to a new destination inside the switching sub-domain.

--`,,```,,,,````-`-`,,`,,`,`,,`---
© ISO/IEC 2007 – All rights reserved
Copyright International Organization for Standardization
Provided by IHS under license with ISO
No reproduction or networking permitted without license from IHS
Not for Resale

Figure 17-14 Directed Pickup Call Service

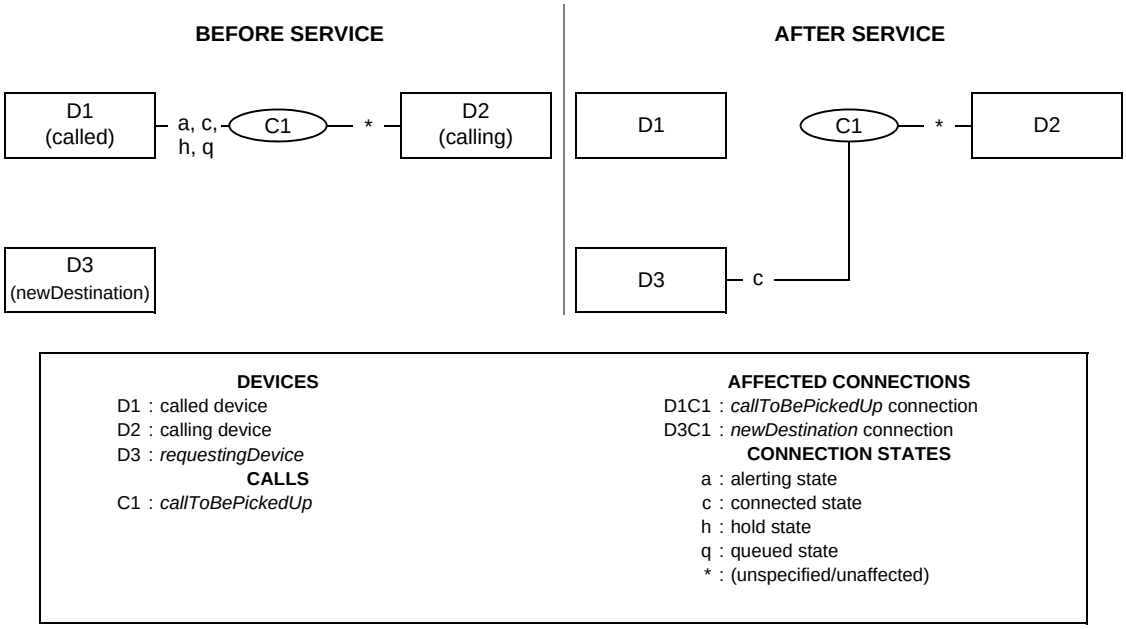

Note that D1 could also be the calling device.

17.1.13.1 Service Request

Table 17-68 Directed Pickup Call—Service Request

Parameter Name	Type	M/ O/C	Description
callToBePickedUp	ConnectionID	M	Specifies the connection to be picked up.
requestingDevice	DeviceID	M	Specifies the device which is picking up the call.
correlatorData	CorrelatorData	O	Specifies the correlator data to associate with the call.
userData	UserData	O	Specifies the user data to be sent to parties in the call.
security	CSTASecurityData	O	Specifies timestamp information, message sequence number, and security information.
privateData	CSTAPrivateData	O	Specifies non-standardized information.

17.1.13.2 Service Response

The capability exchange services describe the type of acknowledgement model (atomic or multi-step) that the switching function supports for this service request.

17.1.13.2.1 Positive Acknowledgement

Table 17-69 Directed Pickup Call—Positive Acknowledgement

Parameter Name	Type	M/ O/C	Description
pickedCall	ConnectionID	O	Specifies the connectionID for the device which is picking up the call.
pickedCallInfo	ConnectionInformation	O	Specifies the connection information associated with the pickedCall connection. If this parameter is not present, then the connection information is switching function specific.

© ISO/IEC 2007 – All rights reserved

Copyright International Organization for Standardization
Provided by IHS under license with ISO
No reproduction or networking permitted without license from IHS
Not for Resale

Table 17-69 Directed Pickup Call—Positive Acknowledgement (continued)

Parameter Name	Type	M/ O/C	Description
security	CSTASecurityData	O	Specifies timestamp information, message sequence number, and security information.
privateData	CSTAPrivateData	O	Specifies non-standardized information.

17.1.13.2.2 Negative Acknowledgement

The negative acknowledgement error codes are described in 12.2.14, “ErrorValue”, on page 115.

17.1.13.3 Operational Model

17.1.13.3.1 Connection State Transitions

Table 17-70 Directed Pickup Call—Connection State Transitions

Connection	Initial State (Required)	Final State
D1C1 (callToBePickedUp)	Alerting, Connect, Hold, or Queued	Null
D2C1 (calling device)	(Unspecified)	(Unaffected; no transition due to this service.)
D3C1 (requestingDevice)	Null	Connected

17.1.13.3.2 Device-Type Monitoring Event Sequences

Table 17-71 Directed Pickup Call—Device-Type Monitoring Event Sequences

Monitored Device	Connection	Event	Event Cause
D1 (called device)	D1C1 (callToBepickedUp)	Diverted (see item #2)	Call Pickup
D2 (calling device)	D1C1	Diverted (optional) (see items #1 and #2)	Call Pickup
	D3C1 (see item #5)	Service Initiated (optional) (see item #5)	Call Pickup (prompting)
	D3C1	Established	Call Pickup
D3 (requestingDevice)	D3C1	Service Initiated (optional) (see item #5)	Call Pickup (prompting)
	D3C1	Established	Call Pickup

17.1.13.3.3 Call-Type Monitoring Event Sequences

Table 17-72 Directed Pickup Call—Call-Type Monitoring Event Sequences

Monitored Call	Connection	Event	Event Cause
C1	D1C1	Diverted (optional) (see Items #2 and #4)	Call Pickup
	D3C1 (item #5)	Service Initiated (optional) (item #5)	Call Pickup (prompting)
	D3C1	Established	Call Pickup

1. The switching function provides the Diverted event for D2 only if it is providing Diverted events for all devices in the call. This is indicated through the capabilities exchange services.

© ISO/IEC 2007 – All rights reserved

Copyright International Organization for Standardization
Provided by IHS under license with ISO
No reproduction or networking permitted without license from IHS
Not for Resale

2. A Connection Cleared event will not be provided. The Diverted event implies the ConnectionID (for D1C1) has gone to Null.
3. If there is already a connection in the initiated state at the requestingDevice device, the computing function may receive a Connection Cleared event for that connection and an Established event for the connection involving the picked call.
4. The switching function provides the Diverted event for C1 only if it is providing Diverted events for call-type monitors. This is indicated through the capabilities exchange services.
5. The Service Initiated event is dependent upon the prompting mode (as described in 6.7.10, “Prompting”, on page 84).
   - For the “prompting is a pre-condition of the service” mode, the Service Initiated is generated before any service specific events and is not part of the service completion criteria. The connectionID associated with the Service Initiated event is not associated with the Directed Pickup service.
   - For the “prompting is part of the service” mode, the Service Initiated event is part of the service completion criteria, and is generated after the Diverted event and contains the same connectionID as the Diverted and Established events.
6. If a Bridged event is generated for an Independent Shared Bridged device configuration (see Functional Requirement #4), it is not part of the service completion criteria.

17.1.13.3.4 Functional Requirements

1. This service differs from the Deflect Call service in that the Deflect Call service redirects a call to another destination (in which the resulting state of the new destination depends on the destination’s type and active features). The Directed Pickup Call service redirects a call to another destination which is immediately connected to the call.
2. For the newDestination, all features such as Forwarding and Do Not Disturb for this device will be ignored while the call is being redirected to it.
3. As a result of the Directed Pickup service, the call ID associated with this call remains unchanged.
4. For Shared Bridged device configurations, when a call is picked from an appearance (callToBePickedUp) all appearances will be cleared from the call (i.e., Connection Cleared events with a cause of Normal), except when the call that is being picked is part of an Independent Shared Bridged device configuration and the appearance from which the call is being picked is not the last appearance connected into the call. In this case the appearance from which the call is being picked will return to the inactive mode (i.e., Bridged event with a cause of Normal) and the other appearances are unaffected. For more information, refer to Annex , “A.2.3 Shared-Bridged”.
5. This service request does *not* support the use of a null device identifier or a Diallable Digits format (DD) device identifier that has a partial dialling sequence character (i.e., the “;” character) in it for the newDestination parameter. A complete and valid device identifier shall be provided, otherwise the switching function will reject the service request with a negative acknowledgement.
6. This service is used when the device associated with the callToBePickedUp connection ID is different from the newDestination device. If the devices are the same, then the service is rejected. The Answer Call and the Retrieve Call services should be used instead.

17.1.14 Group Pickup Call

C ⟶ S

The Group Pickup Call service moves a call that is a member of a specified or default pickup group to a new specified destination.

This results in a connection in a pickup group to be connected to a new specified destination inside the switching sub-domain.

© ISO/IEC 2007 – All rights reserved

Copyright International Organization for Standardization
Provided by IHS under license with ISO
No reproduction or networking permitted without license from IHS
Not for Resale

Note that the difference between this service and the Directed Pickup Call service is that Directed Pickup Call service specifies the actual connection to be picked up whereby the Group Pickup Call service does not.

Figure 17-15 Group Pickup Call Service

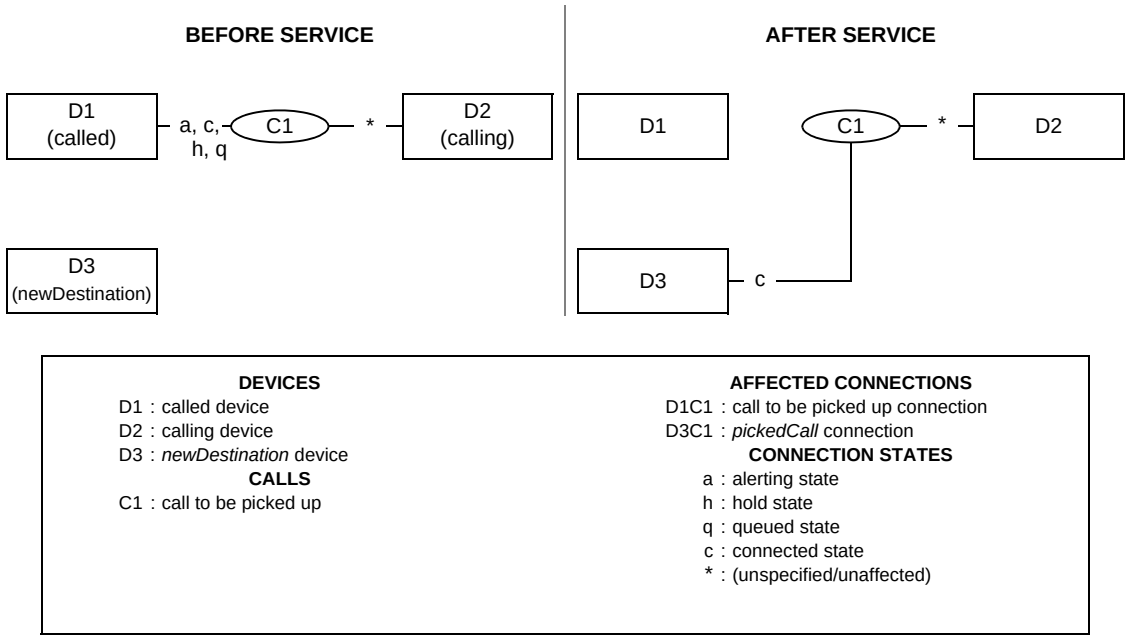

Note that D1 may also be the calling device.

17.1.14.1 Service Request

Table 17-73 Group Pickup Call—Service Request

Parameter Name	Type	M/ O/C	Description
newDestination	DeviceID	M	Specifies the device which is picking up the call.
pickGroup	DeviceID	O	Specifies the pick group. If this parameter is not provided, the switching function may use a pick group associated with the newDestination device.
correlatorData	CorrelatorData	O	Specifies the correlator data to associate with the call.
userData	UserData	O	Specifies the user data to be sent to parties in the call.
security	CSTASecurityData	O	Specifies timestamp information, message sequence number, and security information.
privateData	CSTAPrivateData	O	Specifies non-standardized information.

17.1.14.2 Service Response

The capability exchange services describe the type of acknowledgement model (atomic or multi-step) that the switching function supports for this service request.

--`,,```,,,,````-`-`,,`,,`,`,,`---
© ISO/IEC 2007 – All rights reserved
Copyright International Organization for Standardization
Provided by IHS under license with ISO
No reproduction or networking permitted without license from IHS
Not for Resale

17.1.14.2.1 Positive Acknowledgement

Table 17-74 Group Pickup Call—Positive Acknowledgement

Parameter Name	Type	M/ O/C	Description
pickedCall	ConnectionID	O	Specifies the connection ID of call C1 at device D3.
pickedCallInfo	ConnectionInformation	O	Specifies the connection information associated with the pickedCall connection. If this parameter is not present, then the connection information is switching function specific.
security	CSTASecurityData	O	Specifies timestamp information, message sequence number, and security information.
privateData	CSTAPrivateData	O	Specifies non-standardized information.

17.1.14.2.2 Negative Acknowledgement

The negative acknowledgement error codes are described in 12.2.14, “ErrorValue”, on page 115.

17.1.14.3 Operational Model

17.1.14.3.1 Connection State Transitions

Table 17-75 Group Pickup Call—Connection State Transitions

Connection	Initial State (Required)	Final State
D1C1 (call to be picked up)	Alerting, Connected, Hold, or Queued	Null
D2C1 (calling device)	(Unspecified)	(Unaffected; no transition due to this service.)
D3C1 (pickedCall)	Null	Connected

17.1.14.3.2 Device-Type Monitoring Event Sequences

Table 17-76 Group Pickup Call—Device-Type Monitoring Event Sequences

Monitored Device	Connection	Event	Event Cause
D1 (called device)	D1C1 (callToBepickedUp)	Diverted (see item #1)	Call Pickup
D2 (calling device)	D1C1	Diverted (optional) (see item #1 and #2)	Call Pickup
	D3C1 (see item 2)	Service Initiated (optional) (see item #5)	Call Pickup (prompting)
	D3C1	Established	Call Pickup
D3 (newDestination device)	D3C1	Service Initiated (optional)	Call Pickup (prompting)
	D3C1	Established	Call Pickup

© ISO/IEC 2007 – All rights reserved

Copyright International Organization for Standardization
Provided by IHS under license with ISO
No reproduction or networking permitted without license from IHS
Not for Resale

17.1.14.3.3 Call-Type Monitoring Event Sequences

Table 17-77 Group Pickup Call—Call-Type Monitoring Event Sequences

Monitored Call	Connection	Event	Event Cause
C1	D1C1	Diverted (optional) (see item #1 and #3)	Call Pickup
	D3C1 (see item 2	Service Initiated (optional) (see item 5)	Call Pickup (prompting)
	D3C1	Established	Call Pickup

1. A Connection Cleared event will not be provided. The Diverted event implies the ConnectionID (for D1C1) has gone to Null.
2. The switching function provides the Diverted event for D2 only if it is providing Diverted events for all devices in the call. This is indicated through the capabilities exchange services.
3. The switching function provides the Diverted event for C1 only if it is providing Diverted events for call-type monitors. This is indicated through the capabilities exchange services.
4. If there is already a connection in the initiated state at the newDestination device, the computing function may receive a Connection Cleared event for that connection and an Established event for the connection involving the picked call.
5. The Service Initiated event is dependent upon the prompting mode (as described in 6.7.10, “Prompting”, on page 84).
   - For the “prompting is a pre-condition of the service” mode, the Service Initiated is generated before any service specific events and is not part of the service completion criteria. The connectionID associated with the Service Initiated event is not associated with the Group Pickup service.
   - For the “prompting is part of the service” mode”, the Service Initiated event is part of the service completion criteria, and is generated after the Diverted event and contains the same connectionID as the Diverted and Established events.
6. If a Bridged event is generated for an Independent Shared Bridged device configuration (see Functional Requirement #6), it is not part of the service completion criteria.

17.1.14.3.4 Functional Requirements

1. This service differs from the Deflect Call service in that the Deflect Call service redirects a call to another destination (in which the resulting state of the new destination depends on the destination’s type and active features). The Group Pickup Call service redirects a call to another destination which is immediately connected to the call.
2. The Group Pickup service is administered by the switching function. The switching function determines which call the newDestination connects to by first determining which group the newDestination belongs to (either as specified by the pickGroup parameter or by a switching function administered group associated with the newDestination device) and then connecting it to the appropriate call.
3. For the newDestination, all features such as Forwarding and Do Not Disturb for this device will be ignored while the call is being redirected to it.
4. As a result of the Group Pickup service, the call ID associated with this call remains unchanged.
5. This service request does *not* support the use of a null device identifier or a Diallable Digits format (DD) device identifier that has a partial dialling sequence character (i.e., the “;” character) in it for the newDestination or pickGroup parameters. A complete and valid device identifier shall be provided, otherwise the switching function will reject the service request with a negative acknowledgement.

© ISO/IEC 2007 – All rights reserved

Copyright International Organization for Standardization
Provided by IHS under license with ISO
No reproduction or networking permitted without license from IHS
Not for Resale

6. For Shared Bridged device configurations, when a call is picked from an appearance all appearances will be cleared from the call (i.e., Connection Cleared events with a cause of Normal), except when the call that is being picked is part of an Independent Shared Bridged device configuration and the appearance from which the call is being picked is not the last appearance connected into the call. In this case the appearance from which the call is being picked will return to the inactive mode (i.e., Bridged event with a cause of Normal) and the other appearances are unaffected. For more information, refer to Annex, “A.2.3 Shared-Bridged”.

17.1.15 Hold Call

C → S

The Hold Call service places a connected connection on hold at the same device.

This service interrupts communication for an existing call at a device.

Figure 17-16 Hold Call Service

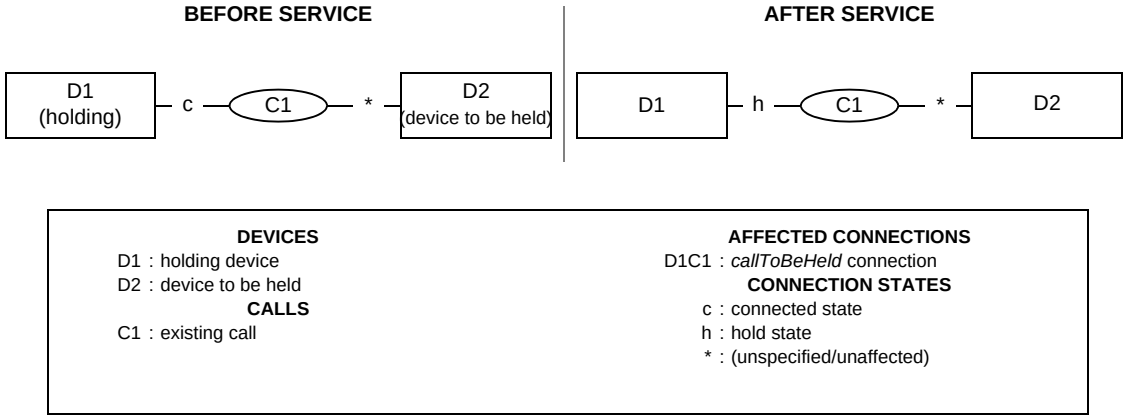

17.1.15.1 Service Request

Table 17-78 Hold Call—Service Request

Parameter Name	Type	M/ O/C	Description
callToBeHeld	ConnectionID	M	Specifies the active connection to be held.
connectionReservation	Boolean	O	Specifies that the media stream channel(s) associated with the call being placed on hold be reserved for reuse at a later time. The complete set of possible values is: • True - channel(s) is to be reserved. • False - channel(s) is not to be reserved (default).
security	CSTASecurityData	O	Specifies timestamp information, message sequence number, and security information.
privateData	CSTAPrivateData	O	Non-standardized information.

17.1.15.2 Service Response

The capability exchange services describe the type of acknowledgement model (atomic or multi-step) that the switching function supports for this service request.

© ISO/IEC 2007 – All rights reserved

Copyright International Organization for Standardization
Provided by IHS under license with ISO
No reproduction or networking permitted without license from IHS
Not for Resale

17.1.15.2.1 Positive Acknowledgement

Table 17-79 Hold Call—Positive Acknowledgement

Parameter Name	Type	M/ O/C	Description
security	CSTASecurityData	O	Specifies timestamp information, message sequence number, and security information.
privateData	CSTAPrivateData	O	Non-standardized information.

17.1.15.2.2 Negative Acknowledgement

The negative acknowledgement error codes are described in 12.2.14, “ErrorValue”, on page 115.

17.1.15.3 Operational Model

17.1.15.3.1 Connection State Transitions

Table 17-80 Hold Call—Connection State Transitions

Connection	Initial State (Required)	Final State
D1C1 (callToBeHeld)	Connected	Hold
other connections in the call (i.e., D2C1)	(Unspecified)	(Unaffected; no transition due to this service).

17.1.15.3.2 Device-Type Monitoring Event Sequences

Table 17-81 Hold Call—Device-Type Monitoring Event Sequences

Monitored Device	Connection	Event	Event Cause
D1 (Holding device)	D1C1 (callToBeHeld)	Held	Normal
D2 (device to be held and any other connections in call C1)	D1C1 (callToBeHeld)	Held	Normal

17.1.15.3.3 Call-Type Monitoring Event Sequences

Table 17-82 Hold Call—Call-Type Monitoring Event Sequences

Monitored Call	Connection	Event	Event Cause
C1	D1C1(callToBe-Held)	Held	Normal

1. If a Bridged event is generated for an Independent Shared Bridged device configuration (see Functional Requirement #2), it is not part of the service completion criteria.

17.1.15.3.4 Functional Requirements

1. The switching function may have a time-out period for the call once it is held. If the call is not retrieved before the time-out period ends, then the held call may ringback either the holding device or a device predefined by the switching function (such as an attendant console, for example).
2. For Shared Bridged device configurations, when a call is held by an appearance (callToBeHeld) all appearances will transition to the hold state (i.e., Held events with a cause of Normal), except when the call that is being held is part of an Independent Shared Bridged device configuration and the appearance that is holding the call is not the last appearance connected into the call. In this case only the

--`,,```,,,,````-`-`,,`,,`,`,,`---
© ISO/IEC 2007 – All rights reserved
Copyright International Organization for Standardization
Provided by IHS under license with ISO
No reproduction or networking permitted without license from IHS
Not for Resale

appearance holding the call will transition to the hold state and the other appearances are unaffected. For more information, refer to Annex, “A.2.3 Shared-Bridged”.

3. As a result of placing a connection associated with a digital data call (if supported by the switching function) on hold, the other calls at the device or device configuration are unrelated with this call.

17.1.16 Intrude Call

C ⟶ S

The Intrude Call service adds the calling device to a call at a busy called device. Depending upon the switching function, the result will be that the calling device is either actively or silently participating in the called device’s existing call or consulting with the called device with a new call.

There are two cases specified for the Intrude Call service:

- Case A: In this case, the calling device (D1) joins call C2 with devices D2 and D3.
- Case B: In this case, the called device (D2) places its existing active call on hold first and then connects to the new calling device (D1).

Figure 17-17 Intrude Call Service (Case A)

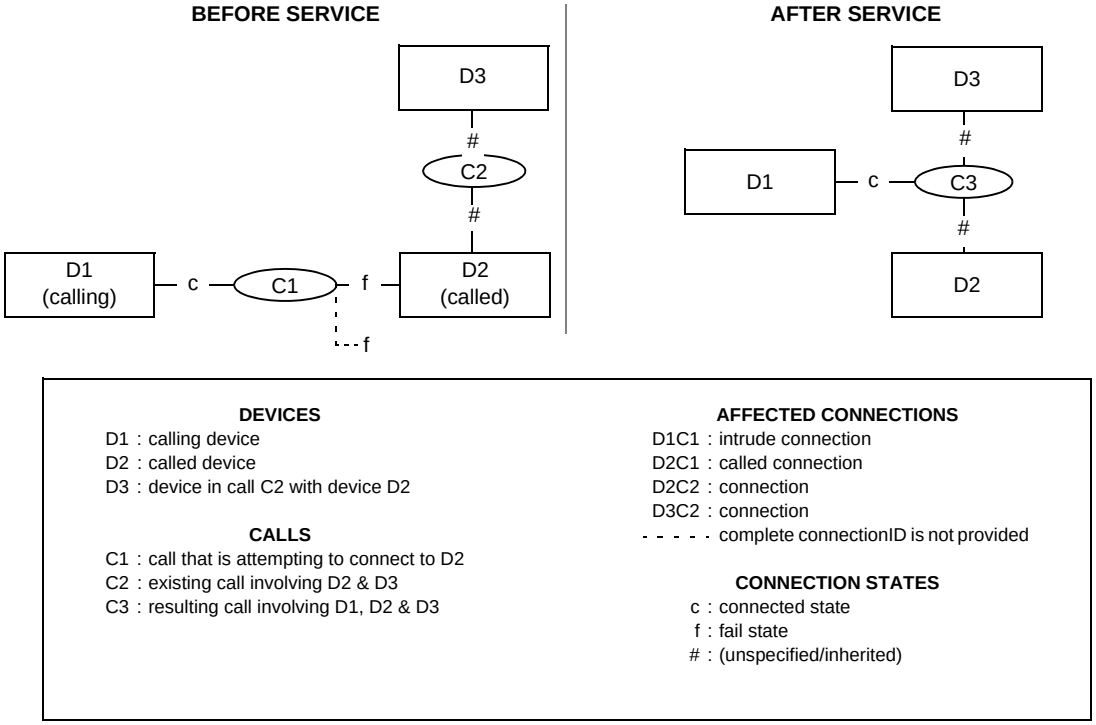

© ISO/IEC 2007 – All rights reserved

Copyright International Organization for Standardization
Provided by IHS under license with ISO
No reproduction or networking permitted without license from IHS
Not for Resale

Figure 17-18 Intrude Call Service (Case B)

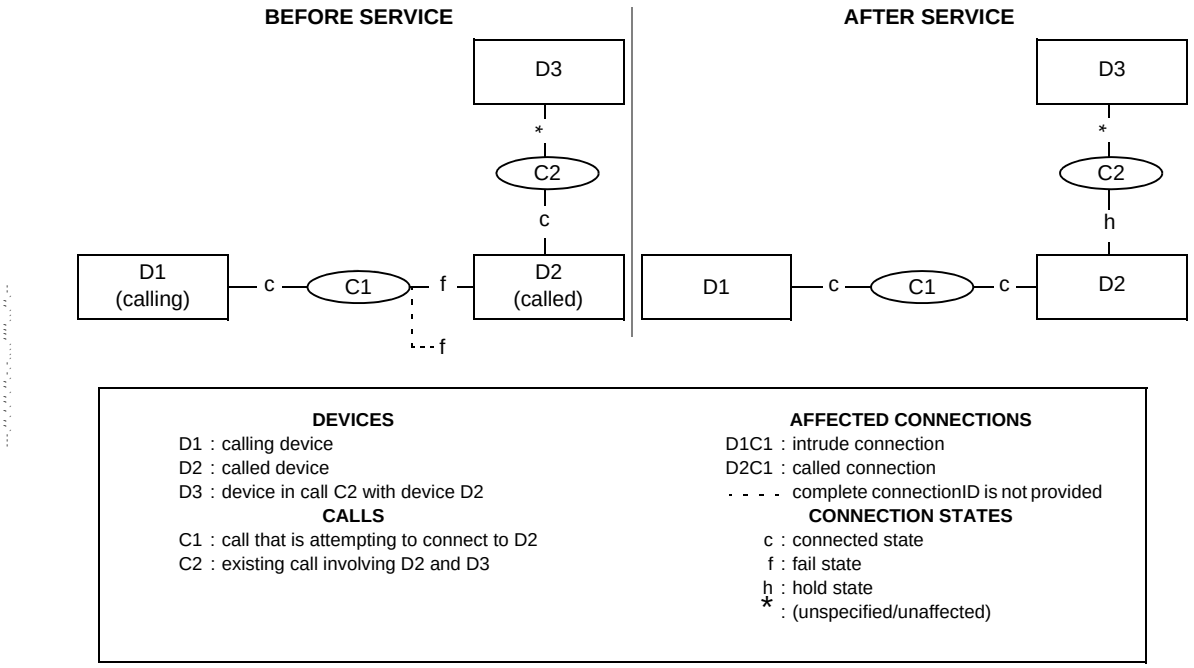

Refer to section 6.7.2, “Connection Failure”, on page 71 for a complete description of “Call ID only” connection IDs.

17.1.16.1 Service Request

Table 17-83 Intrude Call—Service Request

Parameter Name	Type	M/ O/C	Description
intrude	ConnectionID	M	Specifies the connection of the calling device.
participationType	Enumerated	O	Specifies the type of participation the added device has in the resulting call. The complete set of possible values is: • active (default) - The added device actively participates in the resulting conference call. • silent - The added device can listen but cannot actively participate in the resulting conference call. • none - The added device cannot actively participate in the resulting conference call. As a result, the flow direction of the added devices’s connection will be None. If the switching function only supports “Case B” of the service and the participationType parameter is supplied, then the service will be rejected by the switching function.
userData	UserData	O	Specifies the user data to be sent to parties in the call.
security	CSTASecurityData	O	Specifies timestamp information, message sequence number, and security information.
privateData	CSTAPrivateData	O	Specifies non-standardized information.

© ISO/IEC 2007 – All rights reserved
Copyright International Organization for Standardization
Provided by IHS under license with ISO
No reproduction or networking permitted without license from IHS
Not for Resale

17.1.16.2 Service Response

The capability exchange services describe the type of acknowledgement model (atomic or multi-step) that the switching function supports for this service request.

17.1.16.2.1 Positive Acknowledgement

Table 17-84 Intrude Call—Positive Acknowledgement

Parameter Name	Type	M/ O/C	Description
conferencedCall	ConnectionID	C	ConnectionID includes the CallID of the resulting call and the DeviceID of the calling device. Mandatory, if the Intrude Call service creates a new ConnectionID for the calling device as in Case A; otherwise, the parameter is not provided.
conferencedCallInfo	ConnectionInformation	O	Specifies the connection information associated with the conferencedCall connection. If this parameter is not present, then the connection information is switching function specific.
security	CSTASecurityData	O	Specifies timestamp information, message sequence number, and security information.
privateData	CSTAPrivateData	O	Non-standardized information.

17.1.16.2.2 Negative Acknowledgement

The negative acknowledgement error codes are described in 12.2.14, “ErrorValue”, on page 115.

17.1.16.3 Operational Model

17.1.16.3.1 Connection State Transitions

Table 17-85 Intrude Call—Connection State Transitions

Connection	Initial State (Required)	Final State	
		Case A	Case B
D2C1 (called device)	Fail	Null	Connected
D1C1 (intrude)	Connected	Null	Connected
D1C3	Null	Connected	N/A
D2C2	Case A: (Unspecified) Case B: Connected	Null	Hold
D3C2	(Unspecified)	Null	(Unaffected)
D2C3 and all connections in call C3 that had corresponding connections in call C2.	Null	(Inherited from corresponding connections in call C2)	N/A

© ISO/IEC 2007 – All rights reserved

Copyright International Organization for Standardization
Provided by IHS under license with ISO
No reproduction or networking permitted without license from IHS
Not for Resale

17.1.16.3.2 Device-Type Monitoring Event Sequences

- Case A: D1, the calling device, joins call C3 with devices D2 and D3.

Table 17-86 Intrude Call—Device-Type Monitoring Event Sequences (Case A)

Monitored Device	Connection	Event	Event Cause
D1 (calling device)	D1C3	Conferenced	Override, Silent Participation, or Active Participation
D2 (called device)	D2C3	Conferenced	Override, Silent Participation, or Active Participation
other devices in original call C2 (i.e., D3)	D3C3	Conferenced	Override, Silent Participation, or Active Participation

- Case B: The called device places its existing active call on hold first and then connects to the new calling device (D1).

Table 17-87 Intrude Call—Device-Type Monitoring Event Sequences (Case B)

Monitored Device	Connection	Event	Event Cause
D1 (calling device)	D2C1 (called)	Established	Intrude
D2 (called device)	D2C2	Held	Normal or Intrude
	D2C1 (called)	Established	Intrude
Other devices in original call C2 (i.e., D3)	D2C2	Held	Normal or Intrude

17.1.16.3.3 Call-Type Monitoring Event Sequences

- Case A: D1, the calling device, joins call C3 with devices D2 and D3.

Table 17-88 Intrude Call—Call-Type Monitoring Event Sequences (Case A)

Monitored Call	Connection	Event	Event Cause
C1 (call attempting to connect to device D2)	D1C3	Conferenced	Override, Silent Participation, or Active Participation
C2 (resulting conference call)	D1C3	Conferenced	Override, Silent Participation, or Active Participation

- Case B: The called device places its existing active call on hold first and then connects to the new calling device (D1).

Table 17-89 Intrude Call—Call-Type Monitoring Event Sequences (Case B)

Monitored Call	Connection	Event	Event Cause
C2 (original call)	D2C2	Held	Intrude or Normal
C1 (call attempting to connect to device D2)	D2C1 (called)	Established	Intrude

1. The event cause is based on the value of the participationType parameter:
   - If the parameter was set to active, then the event cause will be Active Participation.

--`,,```,,,,````-`-`,,`,,`,`,,`---

© ISO/IEC 2007 – All rights reserved

Copyright International Organization for Standardization
Provided by IHS under license with ISO
No reproduction or networking permitted without license from IHS
Not for Resale

- If the parameter was set to silent or none, then the event cause will be Silent Participation.
- If the switching function cannot determine the type used, then the event cause will be Override.

17.1.16.3.4 Functional Requirements

1. To cancel an Intrude Call service, the computing function can either:
   - Issue the Clear Connection or Clear Call service with the ConnectionID of either the calling (cases A or B) or called (case B) device.
   - Have the calling device go on-hook.

   If the above is successfully executed, normal call progress messages of Connection Cleared (with an event cause of Normal Clearing) will be generated.
2. The computing function should never assume the reuse of callIDs, although some switching functions may reuse one or the other.
3. If the called device has more than one call during the execution of this service, the switching function will choose which call to intrude upon.

17.1.17 Join Call

C ⟶ S

The Join Call service allows a computing function to request, on behalf of a device, that the device be joined into an existing call. In the process of establishing a connection with the joiningDevice, the joiningDevice may be prompted to go off-hook (if necessary) and when that device does so, it is added into the call.

This service is different from the Single Step Conference service in that the request is made on behalf of the joiningDevice (originating device).

This service is different from the Intrude Call service in that there is no prior failed call at the intruded-upon connection.

Figure 17-19 Join Call Service

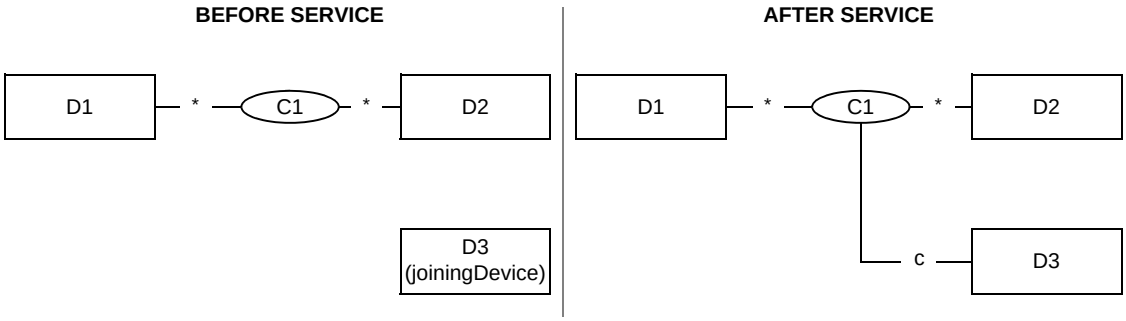

DEVICES
D1 : device in call C1 with device D2
D2 : device in call C1 with device D1
D3 : *joiningDevice*

CALLS
C1 : existing call

AFFECTED CONNECTIONS
D1C1 : active call connection for device D1
D2C1 : active call connection for device D2
D3C1 : *conferencedCall* connection

CONNECTION STATES
c : connected state
* : (unspecified/unaffected)

© ISO/IEC 2007 – All rights reserved

Copyright International Organization for Standardization
Provided by IHS under license with ISO
No reproduction or networking permitted without license from IHS
Not for Resale

17.1.17.1 Service Request

Table 17-90 Join Call—Service Request

Parameter Name	Type	M/ O/C	Description
activeCall	connectionID	M	Specifies an existing connection in an active call to which the new device is to be added (or joined)
joiningDevice	DeviceID	M	Specifies the device that is to be added to (join) the existing call
autoOriginate	Enumerated	O	Specifies if the joining device is to be prompted or not (hands-free mode). The complete set of possible values is: • Prompt (default) • Do Not Prompt (auto originate)
participationType	Enumerated	O	Specifies the type of participation the joining device has in the resulting call. This is one of the following: • active (default) - the joining device actively participates in the resulting conference call. As a result, the flow direction of the joiningDevice's connection (i.e., conferencedCall) will be Transmit and Receive. • silent - the joining device can listen but cannot actively participate in the resulting conference call. As a result, the flow direction of the joiningDevice's connection (i.e., conferencedCall) will be Receive. • none - the joining device cannot actively participate in the resulting conference call. As a result, the flow direction of the joiningDevice's connection (i.e., conferencedCall) will be None.
accountCode	AccountInfo	O	Specifies the account code to associate with the call.
authCode	AuthCode	O	Specifies the authorization code to allow the call.
correlatorData	CorrelatorData	O	Specifies the correlator data to associate with the call.
userData	UserData	O	Specifies the user data to be sent to parties in the call.
security	CSTASecurityData	O	Specifies timestamp information, message sequence number, and security information.
privateData	CSTAPrivateData	O	Specifies non-standardized information.

17.1.17.2 Service Response

The capability exchange services describe the type of acknowledgement model (atomic or multi-step) that the switching function supports for this service request.

17.1.17.2.1 Positive Acknowledgement

Table 17-91 Join Call—Positive Acknowledgement

Parameter Name	Type	M/ O/C	Description
conferencedCall	ConnectionID	M	Specifies the callID of the existing active call and the DeviceID of the joining device.
conferencedCallInfo	ConnectionInformation	O	Specifies the connection information associated with the conferencedCall connection. If this parameter is not present, then the connection information is switching function specific.

© ISO/IEC 2007 – All rights reserved

Copyright International Organization for Standardization
Provided by IHS under license with ISO
No reproduction or networking permitted without license from IHS
Not for Resale

Table 17-91 Join Call—Positive Acknowledgement (continued)

Parameter Name	Type	M/ O/C	Description
security	CSTASecurityData	O	Specifies timestamp information, message sequence number, and security information.
privateData	CSTAPrivateData	O	Specifies non-standardized information.

17.1.17.2.2 Negative Acknowledgement

The negative acknowledgement error codes are described in 12.2.14, “ErrorValue”, on page 115.

17.1.17.3 Operational Model

17.1.17.3.1 Connection State Transitions

Table 17-92 Join Call—Connection State Transitions

Connection	Initial State (Required)	Final State
D1C1	(Unspecified)	(Unaffected; no transition due to this service)
D2C1	(Unspecified)	(Unaffected; no transition due to this service)
D3C1 (conferencedCall)	Null	Connected

17.1.17.3.2 Device-Type Monitoring Event Sequences

Table 17-93 Join Call—Device-Type Monitoring Event Sequences

Monitored Device	Connection	Event	Event Cause
D1	D3C1 (conferencedCall)	Conferenced	Join Call, ActiveParticipation, Silent Participation
	D3C1 (conferencedCall) (see item 2)	Service Initiated (optional) (see item 2)	Join Call (prompting)
	D3C1 (conferenced Call)	Established	Join Call, ActiveParticipation, Silent Participation
D2	D3C1 (conferencedCall)	Conferenced	Join Call, ActiveParticipation, Silent Participation
	D3C1 (conferencedCall) (see item 2)	Service Initiated (optional) (see item 2)	Join Call (prompting)
	D3C1 (conferencedCall)	Established	Join Call, ActiveParticipation, Silent Participation
D3 (joiningDevice)	D3C1 (conferencedCall)	Conferenced	Join Call, ActiveParticipation, Silent Participation
	D3C1 (conferencedCall) (see item 2)	Service Initiated (optional) (see item 2)	Join Call (prompting)
	D3C1 (conferencedCall)	Established	Join Call, ActiveParticipation, Silent Participation

© ISO/IEC 2007 – All rights reserved

Copyright International Organization for Standardization
Provided by IHS under license with ISO
No reproduction or networking permitted without license from IHS
Not for Resale

17.1.17.3.3 Call-Type Monitoring Event Sequences

Table 17-94 Join Call—Call-Type Monitoring Event Sequences

Monitored Device	Connection	Event	Event Cause
C1	D3C1	Conferenced	Join Call, ActiveParticipation, Silent Participation
	D3C1 (see item 2)	Service Initiated (optional) (see item 2)	Join Call (prompting)
	D3C1	Established	Normal

1. For the Conferenced event, the event cause is based upon the value of the participationType parameter:
   - If it was set to active, then the event cause is Active Participation.
   - If it was set to silent or none, then the event cause is Silent Participation.
   - If the switching function cannot determine the type used, then the event cause is Join Call.
2. The Service Initiated event is dependent upon the prompting mode (as described in 6.7.10, “Prompting”, on page 84).
   - For the “prompting is a pre-condition of the service” mode, the Service Initiated is generated before any service specific events and is not part of the service completion criteria. The connectionID associated with the Service Initiated event is not associated with the Join Call service.
   - For the “prompting is part of the service” mode, the Service Initiated event is part of the service completion criteria, and is generated after the Conferenced event and contains the same connectionID as the Conferenced and Established events.

17.1.17.3.4 Functional Requirements

1. The appearances in a shared bridged device configuration are unaffected by this service.
2. This service request does not support the use of a null device identifier or a Diallable Digits format (DD) device identifier that has a partial dialling sequence character (i.e., the “;” character) in it for the joiningDevice parameter. A complete and valid device identifier shall be provided, otherwise the switching function will reject the service request with a negative acknowledgement.
3. Prompting of the joining device during the processing of the Join Call service is switching function specific (display flashing, ring pattern, lamp blinking, etc.).
4. If the autoOriginate parameter has a value of “Do Not Prompt”, then the device should be a speakerphone, hands-free telephone, or other device that can be automatically answered. If the device is not of this type, then the processing of this parameter is switching function specific. For example, the switching function may choose to accept this service and ignore this parameter, or it may reject the Join Call service with negative acknowledgement.
5. Call Forwarding and Do Not Disturb features for the joining device are not honoured. If a switching function supports prompting of the joining device and detects that a feature was activated while processing the Join Call service and this feature cannot be overridden, then the switching function will return a negative acknowledgement.
6. The call ID in the ConnectionIDs for the resulting conference call is inherited from the original active call.
7. When prompting a device which has a call appearance, bridged, or hybrid device configuration, only one of the appearances will be delivered the call.
8. If this service is used to join a device into a digital data call, the connection for the joiningDevice (i.e., conferencedCall) will inherit the characteristics of the call with the exception of connection flow direction

--`,,```,,,,````-`-`,,`,,`,`,,`---
© ISO/IEC 2007 – All rights reserved
Copyright International Organization for Standardization
Provided by IHS under license with ISO
No reproduction or networking permitted without license from IHS
Not for Resale

and the number of channels used. In these cases, the connection flow direction is dependent on the value of participationType and the number of channels is based on what the switching function will use to allow the joiningDevice to effectively participate in the call.

17.1.18 Make Call

C → S

The Make Call service allows the computing function to set up a call between a calling device and a called device.

The service creates a new call and establishes an initiated or connected connection with the calling device. The Make Call service assigns a ConnectionID to the calling device and returns it in the positive acknowledgement.

In the process of establishing the connection with the calling device, the calling device may be prompted to go off-hook (if necessary) and when that device does so, a call to the called device is originated or the calling device is still in the process of dialling the called device.

Figure 17-20 Make Call Service—Case A: Complete Dialling Sequence Provided

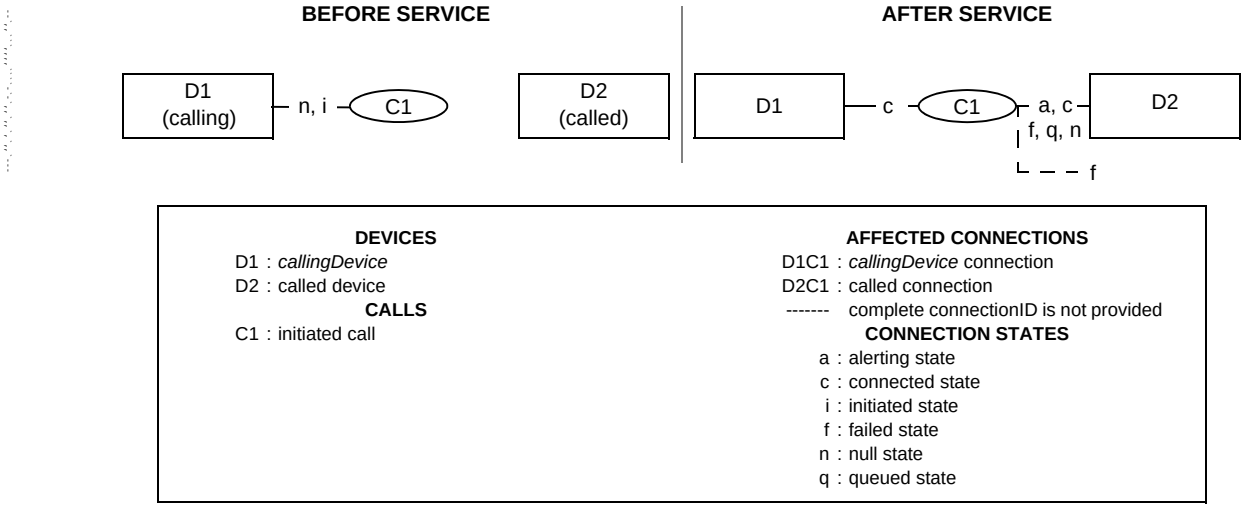

Note that (Case A) the Initiated state (D1C1) is used for Offhook Dialling (see Functional Requirement #6).

Figure 17-21 Make Call Service—Case B: Partial Dialling Sequence Provided

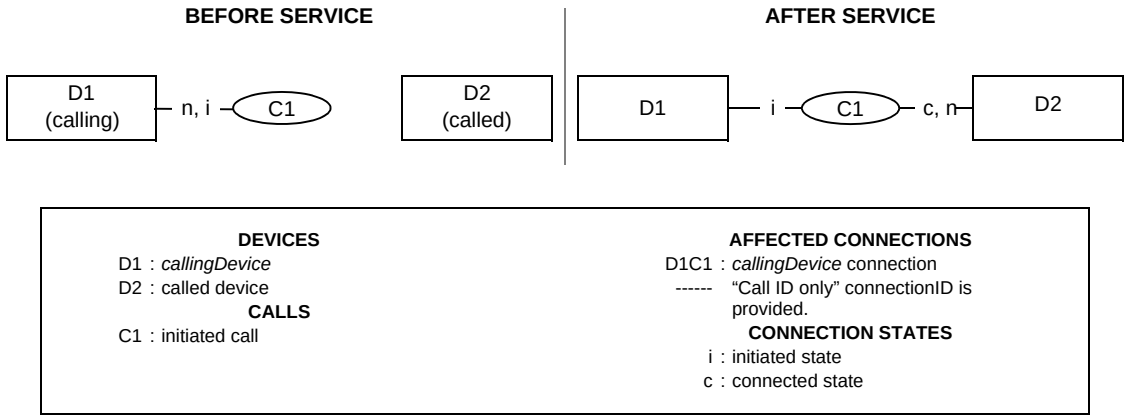

Refer to 6.7.2, "Connection Failure", on page 71 for a complete description of "Call ID only" connection IDs.

Note that (Case B) the connected state (D2C1) exists when D2 is a NID.

© ISO/IEC 2007 – All rights reserved

Copyright International Organization for Standardization
Provided by IHS under license with ISO
No reproduction or networking permitted without license from IHS
Not for Resale

17.1.18.1 Service Request

Table 17-95 Make Call—Service Request

Parameter Name	Type	M/ O/C	Description
callingDevice	DeviceID	M	Specifies the calling/originating device. Note that this device may be a device that represents a group of devices. In this case the callingDevice in the service request is different from the actual calling device.
calledDirectoryNumber	DeviceID	M	Specifies the called device.
accountCode	AccountInfo	O	Specifies the account code to associate with the new call.
authCode	AuthCode	O	Specifies the authorization code to allow the call.
autoOriginate	Enumerated	O	Specifies if the calling device's connection is automatically answered (hands-free mode). The complete set of possible values is: • Prompt (default) • Do Not Prompt (auto originate)
correlatorData	CorrelatorData	O	Specifies the correlator data to associate with the call.
userData	UserData	O	Specifies the user data to be sent to parties in the call.
callCharacteristics	CallCharacteristics	O	Specifies the high level characteristics (Priority call, for example) to be associated with the call. See 12.2.4, "CallCharacteristics", on page 108 for the complete set of possible values. If the supported characteristics cannot be honoured, the switching function shall reject the service request.
mediaCallCharacteristics	MediaCallCharacteristics	O	This specifies the media characteristics to be associated with the call being made. If this parameter is not present then the media class is Voice.
callingConnectionInfo	ConnectionInformation	O	This specifies the connection information needed for the creation of a connection at the callingDevice. If this parameter is not present then the connection information is switching function specific.
subjectOfCall	SubjectOfCall	O	Specifies the subject/intent of the call.
languagePreferences	LanguagePreferences	O	Specifies the language preferences to be associated with the call.
reason	EventCause	O	Specifies the reason the call is being made. See 12.2.15, "EventCause", on page 126 for a list of possible values.
security	CSTASecurityData	O	Specifies timestamp information, message sequence number, and security information.
privateData	CSTAPrivateData	O	Non-standardized information.

17.1.18.2 Service Response

The capability exchange services describe the type of acknowledgement model (atomic or multi-step) that the switching function supports for this service request.

© ISO/IEC 2007 – All rights reserved

Copyright International Organization for Standardization
Provided by IHS under license with ISO
No reproduction or networking permitted without license from IHS
Not for Resale

17.1.18.2.1 Positive Acknowledgement

Table 17-96 Make Call—Positive Acknowledgement

Parameter Name	Type	M/ O/C	Description
callingDevice	ConnectionID	M	Specifies the initial connection to the new call. The ConnectionID shall have the CallID of the resulting new call and the DeviceID of the calling device. Note that the calling device parameter in the service request may be different from the deviceID in the connectionID of callingDevice in the positive acknowledgement (when the callingDevice in the service request represents a group of stations, for example).
mediaCallCharacteristics	MediaCallCharacteristics	C	This specifies the adjusted media characteristics for the call being made. This parameter shall be provided if the call characteristics have been adjusted, otherwise it is optional.
initiatedCallInfo	ConnectionInformation	O	This specifies the adjusted connection information used during the creation of the initiatedCall for the callingDevice. If this parameter is not present, then the connection information is switching function specific.
security	CSTASecurityData	O	Specifies timestamp information, message sequence number, and security information.
privateData	CSTAPrivateData	O	Specifies non-standardized information.

17.1.18.2.2 Negative Acknowledgement

The negative acknowledgement error codes are described in 12.2.14, “ErrorValue”, on page 115.

17.1.18.3 Operational Model

17.1.18.3.1 Connection State Transitions

Table 17-97 Make Call—Connection State Transitions (Case A: Complete Dialling Sequence)

Connection	Initial State (Required)	Final State
D1C1 (callingDevice)	Null, Initiated (see item #17.1.18.3.1)	Initiated, Connected
D2C1 (called)	Null	Alerting, Connected, Queued, Fail, or Null (Null if call moves away from the originally called device [i.e., forwarded]).

Table 17-98 Make Call—Connection State Transitions (Case B: Partial Dialling Sequence)

Connection	Initial State (Required)	Final State
D1C1 (callingDevice)	Null, Initiated (see item #17.1.18.3.1)	Initiated
D2C1 (called)	Null	Connected (see item #1), Null

1. When providing a partial dialling sequence (Case B) the connected state for D2C1 only applies to external outbound calls. It indicates that enough of the dial string has been communicated for the switching function to connect the call to the Network Interface Device that will be associated with the called device in the external network.
2. The initial state of Initiated for D1C1 is used when D1 is “offhook” prior to the Make Call service request. The callID used for the Make Call shall be the same as the callID used for the initiated call.

© ISO/IEC 2007 – All rights reserved

Copyright International Organization for Standardization
Provided by IHS under license with ISO
No reproduction or networking permitted without license from IHS
Not for Resale

17.1.18.3.2 Device-Type Monitoring Event Sequences

There are two types of Device-Type Monitoring Event sequences depending on the dialling sequence used for the called device.

- Case A: The dialling sequence for the called device is complete.

Table 17-99 Make Call—Device-Type Monitoring Event Sequences (Case A)

Monitored Device	Connection	Event	Event Cause
D1 (calling device)	D1C1	Service Initiated (optional)	Make Call, if calling device is prompted by the switching function.
			New Call, if the Make Call is done manually.
	D1C1	Originated	Normal
	D2C1	Events depend on the type of device (ACD, extension, external device, etc.) and features activated at it at the time of this service (i.e., Forward, Do Not Disturb, etc.).(see item #1)	
D2 (called device)	D2C1	Events depend on the type of device (ACD, extension, external device, etc.) and features activated at it at the time of this service (i.e., Forward, Do Not Disturb, etc.). (see item #1)	

- Case B: The dialling sequence for the called device is incomplete.

Table 17-100 Make Call—Device-Type Monitoring Event Sequences (Case B)

Monitored Device	Connection	Event	Event Cause
D1 (calling device)	D1C1	Service Initiated (optional)	Make Call, if calling device is prompted by the switching function.
			New Call, if the Make Call is done manually.
	D1C1	Digits Dialled	Normal
	D2C1	Events depend on the type of device (ACD, extension, external device, etc.) and features activated at it at the time of this service (i.e., Forward, Do Not Disturb, etc.). (see item #1)	
D2 (called device)	D2C1	Events depend on the type of device (ACD, extension, external device, etc.) and features activated at it at the time of this service (i.e., Forward, Do Not Disturb, etc.). (see item #1)	

© ISO/IEC 2007 – All rights reserved

Copyright International Organization for Standardization
Provided by IHS under license with ISO
No reproduction or networking permitted without license from IHS
Not for Resale

17.1.18.3.3 Call-Type Monitoring Event Sequences

- Case A: The dialling sequence for the called device is complete.

Table 17-101 Make Call—Call-Type Monitoring Event Sequences (Case A)

Monitored Call	Connection	Event	Event Cause
C1	D1C1	Service Initiated (optional)	Make Call, if calling device is prompted by the switching function.
			New Call, if the Make Call is done manually.
	D1C1	Originated	Normal
	D2C1	Events depend on the type of device (ACD, extension, external device, etc.) and features activated at it at the time of this service (i.e., Forward, Do Not Disturb, etc.). (see item #1)	

- Case B: The dialling sequence for the called device is an incomplete sequence.

Table 17-102 Make Call—Call-Type Monitoring Event Sequences (Case B)

Monitored Call	Connection	Event	Event Cause
C1	D1C1	Service Initiated (optional)	Make Call, if calling device is prompted by the switching function.
			New Call, if the Make Call is done manually.
	D1C1	Digits Dialled	Normal
	D2C1	Events depend on the type of device (ACD, extension, external device, etc.) and features activated at it at the time of this service (i.e., Forward, Do Not Disturb, etc.).(see item #1)	

1. Providing of these events by the switching function does not affect the service completion conditions (i.e., a service is considered complete without these events being provided).

17.1.18.3.4 Functional Requirements

1. Prompting of the calling device during the processing of the Make Call service is switching function specific (display flashing, ring pattern, lamp blinking, etc.).
2. If the validation of the Make Call service fails for any reason, the computing function receives a negative acknowledgement, and no valid ConnectionIDs will have been created.
3. If the autoOriginate parameter is supported by the switching function and has a value of “Do Not Prompt”, and if the calling device is not capable of automatically answering the device, then the processing of this parameter is switching function dependent.
4. Call Forwarding and Do Not Disturb features for the calling device are not honoured for the call being made. If a switching function supports prompting of the calling device and detects that a feature was activated while processing the Make Call service and this feature cannot be overridden, then the switching function will return a negative acknowledgement.
5. All active features are honoured for the called device.
6. If a Make Call service is issued for a calling device that has a connection in the Initiated state (i.e., the computing function got a Service Initiated event for a phone manually going off-hook), and the switching

© ISO/IEC 2007 – All rights reserved

Copyright International Organization for Standardization
Provided by IHS under license with ISO
No reproduction or networking permitted without license from IHS
Not for Resale

function can support the issuing of the Make Call service under this condition, then the Connection ID in the positive acknowledgement of the Make Call service will contain the same Connection ID received on the Service Initiated event. If the switching function does not support the Make Call service under this condition, then the service will be rejected with a negative acknowledgement. (This note is an exception to requirement #2 in 9.5.1 on page 95.)

7. The calledDirectoryNumber parameter may contain a device identifier of null (a null formatted device identifier) or contain a Diallable Digits format (DD) device identifier that has a partial dialling sequence character (i.e., the ";" character) at the end of it. When this parameter is used in this manner, the computing function is indicating that it wishes to stage the dialling sequence. The completion of the dialling sequence can be accomplished either by entering the rest of the sequence manually at the actual device or the computing function can use the Dial Digits service to complete the sequence. The other types of calledDirectoryNumber parameter shall contain a complete dialling sequence. The switching function may have a timeout period for multi-stage dialling. If the dialling sequence does not complete prior to this timeout, it may either abort the call or attempt to use the digits already dialled and signal that dialling is complete with an originated event.
8. If the Make Call service is used to initiate a multistage dialling sequence, the computing function is signalled to continue the dialling sequence via either the Service Initiated event (i.e., if the calledDirectoryNumber is Null) or the Digits Dialled event (i.e., if the calledDirectoryNumber has a partial dialling sequence character).
9. When prompting a device which has a call appearance, bridged, or hybrid device configuration, only one of the appearances will be delivered the call.
10. The switching function may or may not adjust the digital data characteristics (e.g., connection rate) and connection information (e.g., number of channels) that were supplied on the Make Call service request (Use the capabilities exchange services to determine which feature the switching function supports). If the switching function supports adjusting the characteristics/connection information but cannot adjust them in this case, the service request will be rejected with an appropriate error code, if the original characteristics/connection information cannot be provided. If the switching function can adjust of the characteristics/connection information, the positive acknowledgement will contain the adjusted value or values. If the computing function determines that the adjusted values are not adequate, it can terminate the digital data call (e.g., Clear Call).
11. If the computing function makes a digital data call and wants to also bind a particular Media Service to the call, then the computing function shall use the Media Attach Service service.
12. The callingDevice parameter in the Make Call service request may represent a group of devices from which the actual calling device is selected. In this case, the callingDevice parameter in subsequent events shall refer to the actual calling device. In addition, the Originated event contains a parameter (originatingDevice) that represents the group of devices (the callingDevice parameter passed in service request).

17.1.19 Make Predictive Call

C ⟶ S

The Make Predictive Call service shall originate a call between two devices by first creating a connection to the called device. The service returns a positive acknowledgement that provides the connection at the called device.

Subsequent actions are taken depending upon the call progress and the actions requested. Examples are:

- An attempt is made to connect at the calling device because a connected state was determined at the called device.
- The call was cleared because a connected state was determined at the called device and the switching function detected a FAX and was instructed by the computing function to clear the call in this case.

© ISO/IEC 2007 – All rights reserved

Copyright International Organization for Standardization
Provided by IHS under license with ISO
No reproduction or networking permitted without license from IHS
Not for Resale

Figure 17-22 Make Predictive Call Service

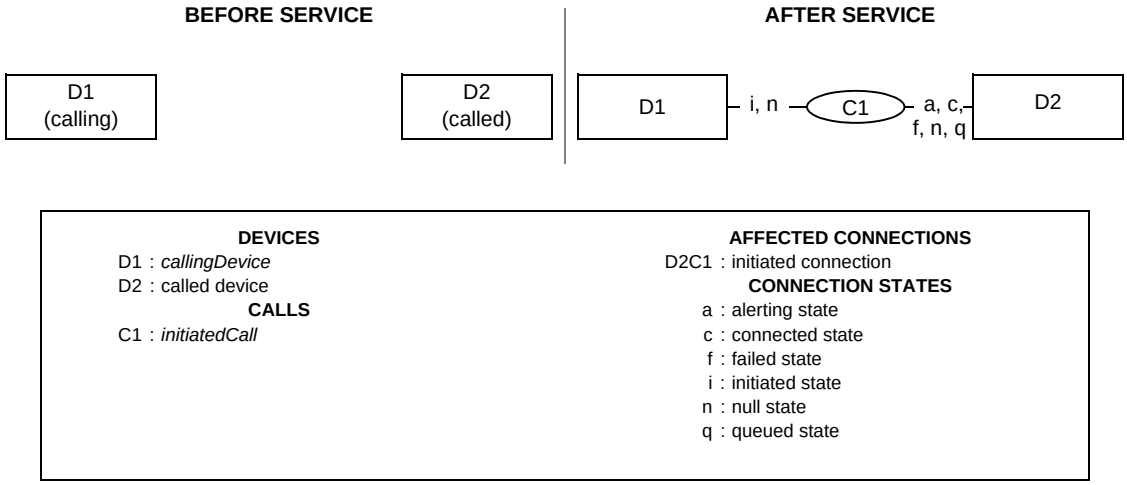

17.1.19.1 Service Request

Table 17-103 Make Predictive Call—Service Request

Parameter Name	Type	M/ O/C	Description
callingDevice	DeviceID	M	Specifies the device on behalf of which the call is originated.
calledDirectoryNumber	DeviceID	M	Specifies the called device.

signallingDetection	Structure	O	Specifies the switching function actions to be taken when the specified call progress conditions at the called device or network are met. It includes the following components:
			• signallingCondition (M) Enumerated - Specifies the conditions that must be satisfied before the switching function processes the signallingConditionsAction. The complete set of possible values is:
			  • callDelivered - Process the specified actions when the call is delivered to or answered at the called device (whichever occurs first).
			  • callEstablished - Process the specified actions when the call has been answered at the called device.
			• signallingConditionsAction (M) Enumerated - Action to be taken by the switching function upon detecting a signallingCondition. The complete set of possible values is:
			  • destinationDetection - The conditions/actions specified in the destinationDetection parameter should be followed.
			  • remainConnected - The called device is to remain in the call and the connection to the calling device is attempted.

© ISO/IEC 2007 – All rights reserved

Copyright International Organization for Standardization
Provided by IHS under license with ISO
No reproduction or networking permitted without license from IHS
Not for Resale

Table 17-103 Make Predictive Call—Service Request (continued)

Parameter Name	Type	M/ O/C	Description

destinationDetection	List of Structures	O	Specifies the switching function actions to be taken when the specified signallingCondition at the called device is met. Each entry in the list contains the following:
			• destinationCondition (M) Enumerated - Specifies the condition that must be satisfied before the switching function processes the detectionAction. The complete set of possible values is:
			  • humanVoice - Process the specified actions when a human voice is detected at the called device.
			  • answeringMachine - Process the specified actions when an answering machine is detected at the called device.
			  • facsimileMachine - Process the specified actions when a (FAX) machine or modem is detected at the called device.
			• detectionAction (M) Enumerated - Action to be taken by the switching function upon detecting of a particular destination condition. The complete set of possible values is:
			  • clearCalledConnection - The connection for the called device is to be cleared.
			  • remainConnected - The called device is to remain in the call and the connection to the calling device is attempted.
			Note that if multiple entries are provided, the switching function shall process the detectionAction associated with the first destinationCondition that is detected.

defaultAction	Enumerated	O	Specifies the actions to be taken when the switching function determines that the condition specified in the signallingCondition component cannot be met. The complete list of possible values is: • clearCalledConnection - The connection for the called device is to be cleared. • remainConnected - The called device is to remain in the call and the connection to the calling device is attempted.
accountCode	AccountInfo	O	Specifies the account code to associate with the new call.
authCode	AuthCode	O	Specifies the authorization code to allow the call.
autoOriginate	Enumerated	O	Specifies if the calling device's connection is automatically answered (hands-free mode). The complete set of possible values is: • prompt (default) • doNotPrompt (auto originate)
alertTime	Value	O	Specifies the amount of time, in seconds, the called device is to be alerted before the call is cleared.
correlatorData	CorrelatorData	O	Specifies the correlator data to associate with the call.
callCharacteristics	CallCharacteristics	O	Specifies the high level characteristics (Priority call, for example) to be associated with the call. See 12.2.4, "CallCharacteristics", on page 108 for the complete set of possible values. If the supported characteristics cannot be honoured, the switching function shall reject the service request.

© ISO/IEC 2007 – All rights reserved
--`,,```,,,,````-`-`,,`,,`,`,,`---
Copyright International Organization for Standardization
Provided by IHS under license with ISO
No reproduction or networking permitted without license from IHS
Not for Resale

Table 17-103 Make Predictive Call—Service Request (continued)

Parameter Name	Type	M/ O/C	Description
userData	UserData	O	Specifies the user data to be sent to parties in the call.
subjectOfCall	SubjectOfCall	O	Specifies the subject/intent of the call.
languagePreferences	LanguagePreferences	O	Specifies the language preferences to be associated with the call.
security	CSTASecurityData	O	Specifies timestamp information, message sequence number, and security information.
privateData	CSTAPrivateData	O	Non-standardized information.

17.1.19.2 Service Response

The capability exchange services describe the type of acknowledgement model (atomic or multi-step) that the switching function supports for this service request.

17.1.19.2.1 Positive Acknowledgement

Table 17-104 Make Predictive Call—Positive Acknowledgement

Parameter Name	Type	M/ O/C	Description
initiatedCall	ConnectionID	M	Specifies the initial connection between the called device and the call. The ConnectionID shall have the CallID of the resulting new call and the DeviceID representing the called device.
initiatedCallInfo	ConnectionInformation	O	Specifies the connection information associated with the initiatedCall connection. If this parameter is not present, then the connection information is switching function specific.
security	CSTASecurityData	O	Specifies timestamp information, message sequence number, and security information.
privateData	CSTAPrivateData	O	Non-standardized information.

17.1.19.2.2 Negative Acknowledgement

The negative acknowledgement error codes are described in 12.2.14, “ErrorValue”, on page 115.

17.1.19.3 Operational Model

17.1.19.3.1 Connection State Transitions

Table 17-105 Make Predictive Call—Connection State Transitions

Connection	Initial State (Required)	Final State
D1C1	Null	Initiated, Null
D2C1 (initiated)	Null	Alerting, Connected, Failed, Queued, or Null

© ISO/IEC 2007 – All rights reserved

--`,,```,,,,````-`-`,,`,,`,`,,`---
Copyright International Organization for Standardization
Provided by IHS under license with ISO
No reproduction or networking permitted without license from IHS
Not for Resale

17.1.19.3.2 Device-Type Monitoring Event Sequences

Table 17-106 Make Predictive Call—Device-Type Monitoring Event Sequences

Monitored Device	Connection	Event	Event Cause
D2 (called device) or the device representing D2 when D2 is outside the switching sub-domain.	D2C1	The sequence of events for the called device will depend on the type of called device and if it is in the switching sub-domain. See item #1 for the service completion criteria.	
	D1C1	Delivered (see item #2).	Normal, Entering Distribution
D1 (calling device)	D1C1	Service Initiated (Optional) - see Functional Requirement #10 and Item #3).	Make Predictive Call, Reserved
	D2C1	The sequence of events for the called device will depend on the type of called device and if it is in the switching sub-domain. See item #1 for the service completion criteria.	
	D1C1	Delivered (see item #2).	Normal, Entering Distribution

17.1.19.3.3 Call-Type Monitoring Event Sequences

Table 17-107 Make Predictive Call—Call-Type Monitoring Event Sequences

Monitored Call	Connection	Event	Event Cause
C1	D1C1	Service Initiated (Optional - see functional requirements #10 and Item #3).	Make Predictive Call, Reserved
	D2C1	The sequence of events for the called device will depend on the type of called device and if it is in the switching sub-domain See item #1 for the service completion criteria.	
	D1C1	Delivered (See item #2).	Normal, Entering Distribution

1. The completion criteria for this service depends upon the signallingCondition component specified in the service request:

   a. the Delivered or Established event (whichever flows first) for D2 if the signallingCondition is Delivered

   b. the Established event for D2 if the signallingCondition is Established

   In the case where the switching function detects that the conditions specified in the signallingCondition component cannot be met (for example when the call fails or queues at the called device), the service is completed when the switching function generates the event corresponding to the condition at the called device that prevented the signallingCondition from being met (Failed, Queued events, for example) or Connection Cleared if the switching function cleared the called connection (see Functional Requirement #4).

2. If the signallingConditionAction parameter specifies remainConnected, then depending on the type of calling device and its state, the Delivered, Queued, Failed, and Established events can flow for D1. These events are not part of the service completion criteria.

3. In the case where the switching function reserves the calling device for allocating the predictive call to it, Functional Requirement #10 applies but the cause code of reserved shall be used.

© ISO/IEC 2007 – All rights reserved

Copyright International Organization for Standardization
Provided by IHS under license with ISO
No reproduction or networking permitted without license from IHS
Not for Resale

17.1.19.3.4 Functional Requirements

1. The service does not guarantee the connection to the calling device; only that an attempt will be made to connect to the device.
2. The calling device in a Make Predictive Call service request is often a group or ACD device that then allocates the new call to another calling device.
3. A typical use of the Make Predictive Call service is to place calls outside the CSTA switching sub-domain. The CSTA connection identifier reported in the positive acknowledgement refers to the Network Interface Device associated with the called device.
4. The parameter defaultAction is used in situations where the switching function detects that the signallingCondition in the service request cannot be met. For example, the requestor of the service has the capability to instruct the switching function to either connect the calling device for listening to the voice channel or to clear the call.
5. If the validation of the Make Predictive Call fails initial for any reason, the computing function receives a negative acknowledgement, and no valid ConnectionIDs will have been created.
6. If the autoOriginate parameter is supported by the switching function and has a value of attempt, and if the calling device is not capable of automatically answering the device, then the processing of this parameter is switching function dependent.
7. Call Forwarding and Do Not Disturb features for the calling device are not honoured for the call being made. If a switching function determines that it will not be able to deliver the call to the calling device (due to an active feature that cannot be overridden), then the switching function shall return a negative acknowledgement before the call is launched to the called device.
8. All active features are honoured for the called device.
9. Multi-stage dialling is not supported for the Make Predictive Call service.
10. The switching function may indicate that the calling device is involved with a predictive call prior to any call activity at the calling device by generating a Service Initiated event (with a cause of Make Predictive Call) for the calling device. When the Service Initiated event is generated in this case, it is generated prior to any call control events at the called device. If the switching function does not generate the Service Initiated event in this case, no call control events will be generated for the calling device until after the calling device is joined into the call. If the calling device cannot be joined in the call, a Connection Cleared event is generated for the initiatedConnection.

17.1.20 Park Call

C ⟶ S

The Park Call service moves a specified call at a device to a specified (parked-to) destination.

The device on whose behalf Park Call was invoked (the parking device) is no longer associated with the call (except when the parking device parks a call back to the parking device).

© ISO/IEC 2007 – All rights reserved

Copyright International Organization for Standardization
Provided by IHS under license with ISO
No reproduction or networking permitted without license from IHS
Not for Resale

Figure 17-23 Park Call Service

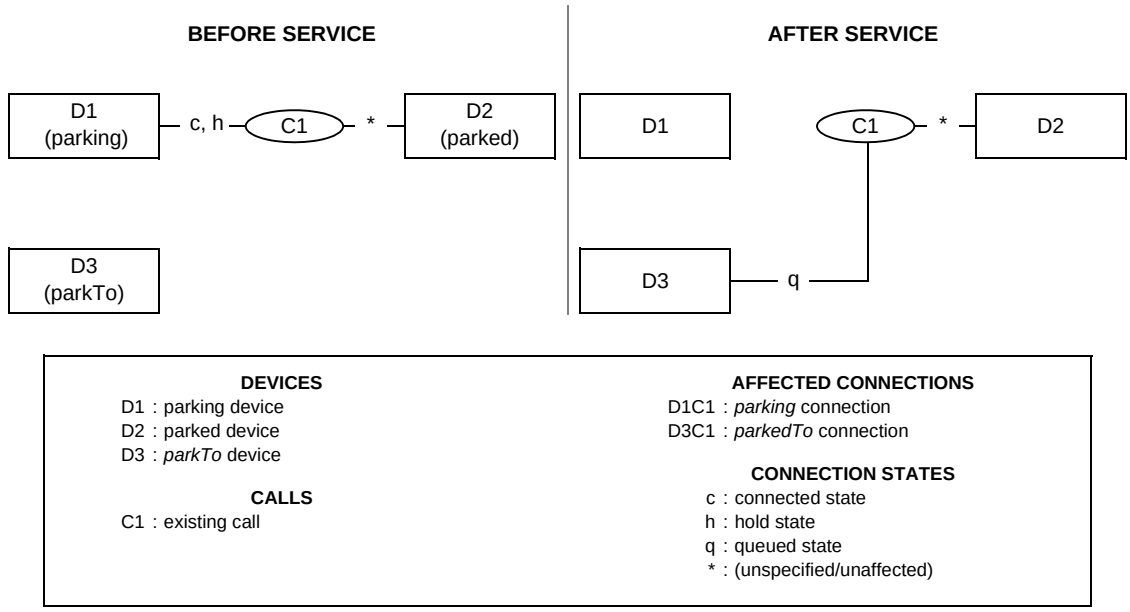

Note that the parking device and the parkTo device may be the same (when a call is parked to the parking device).

Note that D1C1 can transit to the Queued state for certain Shared Bridged device configurations (see Functional Requirement #6).

17.1.20.1 Service Request

Table 17-108 Park Call—Service Request

Parameter Name	Type	M/ O/C	Description
parking	ConnectionID	M	Specifies the connection to be parked.
parkTo	DeviceID	M	Specifies the device to which the call is to be parked (parked-to device). This may be either a station or a Park device.
correlatorData	CorrelatorData	O	Specifies the correlator data to associate with the call.
subjectOfCall	SubjectOfCall	O	Specifies the subject/intent of the call.
languagePreferences	LanguagePreferences	O	Specifies the language preferences to be associated with the call.
security	CSTASecurityData	O	Specifies timestamp information, message sequence number, and security information.
privateData	CSTAPrivateData	O	Specifies non-standardized information.

17.1.20.2 Service Response

The capability exchange services describe the type of acknowledgement model (atomic or multi-step) that the switching function supports for this service request.

© ISO/IEC 2007 – All rights reserved
Copyright International Organization for Standardization
Provided by IHS under license with ISO
No reproduction or networking permitted without license from IHS
Not for Resale

17.1.20.2.1 Positive Acknowledgement

Table 17-109 Park Call—Positive Acknowledgement

Parameter Name	Type	M/ O/C	Description
parkedTo	ConnectionID	O	Specifies the connection at the parkedTo device.
security	CSTASecurityData	O	Specifies timestamp information, message sequence number, and security information.
privateData	CSTAPrivateData	O	Specifies non-standardized information.

17.1.20.2.2 Negative Acknowledgement

The negative acknowledgement error codes are described in 12.2.14, “ErrorValue”, on page 115.

17.1.20.3 Operational Model

17.1.20.3.1 Connection State Transitions

Table 17-110 Park Call—Connection State Transitions

Connection	Initial State (Required)	Final State
D1C1 (parking)	Hold or Connected	Null, Queued (see item #1)
D2C1 (parked)	(Unspecified)	(Unaffected; no transition due to this service).
D3C1 (parkTo)	Null	Queued

1. Connection D1C1 may transit to the Queued state for certain shared bridged device configurations (see functional requirement #5).

17.1.20.3.2 Device-Type Monitoring Event Sequences

Table 17-111 Park Call—Device-Type Monitoring Event Sequences

Monitored Device	Connection	Event	Event Cause
D1 (parking device)	D1C1	Diverted (see items #1, #2)	Park or Normal
D2 (parked device)	D1C1	Diverted (optional) (see items #1, #2, #4)	Park or Normal
	D3C1	Queued	Park or Normal
D3 (parkTo device)	D3C1	Queued	Park or Normal

17.1.20.3.3 Call-Type Monitoring Event Sequences

Table 17-112 Park Call—Call-Type Monitoring Event Sequences

Monitored Call	Connection	Event	Event Cause
C1	D1C1	Diverted (optional) (see items #1, #2, #5)	Park or Normal
	D3C1	Queued	Park or Normal

1. A Connection Cleared event will not be provided for the parking ConnectionID. The Diverted event implies the ConnectionID has gone to Null.

© ISO/IEC 2007 – All rights reserved

Copyright International Organization for Standardization
Provided by IHS under license with ISO
No reproduction or networking permitted without license from IHS
Not for Resale

2. The Diverted event is not provided when a call is parked to the parking device (devices D1 and D3 are the same).
3. If the parking device stays offhook and receives busy or blocked tone, the switching function sends a Failed event (event cause of Blocked or Busy) for a call with a different callID (not C1), followed by a Connection Cleared event.
4. The switching function provides the Diverted event for D2 only if it is providing Diverted events for all devices in a call.This is indicated through the capabilities exchange services.
5. For call-type monitoring, the switching function provides the Diverted event for C1 only if it is providing Diverted events for call-type monitors. This is indicated through the capabilities exchange services.
6. If a Bridged event is generated for an Independent Shared Bridged device configuration (see Functional Requirement #5), it is not part of the service completion criteria.

17.1.20.3.4 Functional Requirements

1. As a result of the Park Call service, the call ID associated with this call remains unchanged.
2. A call may be parked at a device which is already involved with the call. In this case the parking device (D1) and the parkTo (D3) are the same. Refer to Figure 17-23 for specific requirements for this configuration.
3. The switching function may have a time-out period for the call once it is parked. If the call is not unparked before the time-out period ends, then the parked call may ringback the parking device or another switching defined device such as an attendant console, for example, or the call may be dropped.
4. Features such as Do Not Disturb and Forwarding are honoured at the parkedTo device when the call is being parked.
5. For Shared Bridged device configurations, when a call is parked from an appearance (parking) all appearances will be cleared from the call (i.e., Connection Cleared events with a cause of Normal Clearing), except when the call that is being parked is part of an Independent Shared Bridged device configuration and the appearance that is parking the call is not the last appearance connected into the call. In this case the appearance parking the call will return to the inactive mode (i.e., Bridged event with a cause of Normal) and the other appearances are unaffected. For more information, refer to Annex , “A.2.3 Shared-Bridged”.
6. This service request does *not* support the use of a null device identifier or a Diallable Digits format (DD) device identifier that has a partial dialling sequence character (i.e., the “;” character) in it for the parkTo parameter. A complete and valid device identifier shall be provided, otherwise the switching function will reject the service request with a negative acknowledgement.

17.1.21 Reconnect Call

C ⟶ S

The Reconnect Call service will clear a specified connection at the reconnecting device and retrieve a specified held connection at the same device.

© ISO/IEC 2007 – All rights reserved

Copyright International Organization for Standardization
Provided by IHS under license with ISO
No reproduction or networking permitted without license from IHS
Not for Resale

Figure 17-24 Reconnect Call Service

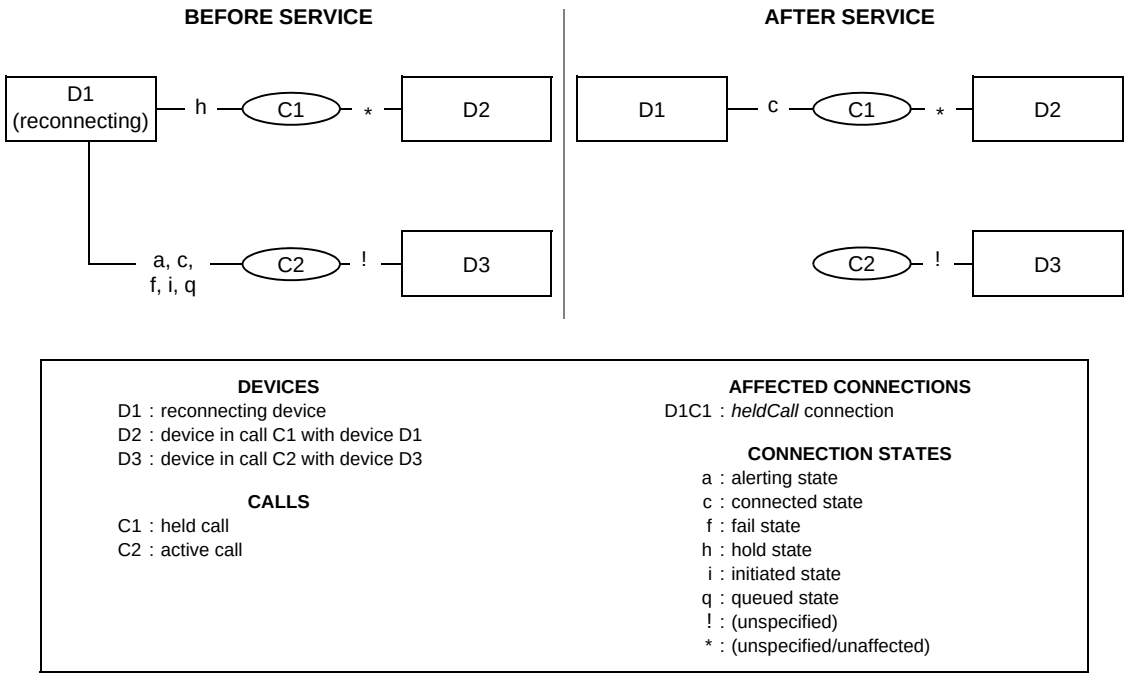

17.1.21.1 Service Request

Table 17-113 Reconnect Call—Service Request

Parameter Name	Type	M/ O/C	Description
activeCall	ConnectionID	M	Specifies the connection to be cleared.
heldCall	ConnectionID	M	Specifies the held connection.
security	CSTASecurityData	O	Specifies timestamp information, message sequence number, and security information.
privateData	CSTAPrivateData	O	Specifies non-standardized information.

17.1.21.2 Service Response

The capability exchange services describe the type of acknowledgement model (atomic or multi-step) that the switching function supports for this service request.

17.1.21.2.1 Positive Acknowledgement

Table 17-114 Reconnect Call—Positive Acknowledgement

Parameter Name	Type	M/ O/C	Description
security	CSTASecurityData	O	Specifies timestamp information, message sequence number, and security information.
privateData	CSTAPrivateData	O	Specifies non-standardized information.

17.1.21.2.2 Negative Acknowledgement

The negative acknowledgement error codes are described in 12.2.14, “ErrorValue”, on page 115.

© ISO/IEC 2007 – All rights reserved

Copyright International Organization for Standardization
Provided by IHS under license with ISO
No reproduction or networking permitted without license from IHS
Not for Resale

17.1.21.3 Operational Model

17.1.21.3.1 Connection State Transitions

Table 17-115 Reconnect Call—Connection State Transitions

Connection	Initial State (Required)	Final State
D1C1 (heldCall)	Hold	Connected
D1C2 (activeCall)	Alerting, Connected, Initiated, Fail, or Queued	Null
D2C1	(Unspecified)	(Unaffected)
D3C2	(Unspecified)	(Unspecified)

17.1.21.3.2 Device-Type Monitoring Event Sequences

Table 17-116 Reconnect Call—Device-Type Monitoring Event Sequences

Monitored Device	Connection	Event	Event Cause
D1 (reconnecting device)	D1C2	Connection Cleared	Normal Clearing, Call Canceled
	D1C1	Retrieved	Normal
D2 (and other devices in call C1)	D1C1	Retrieved	Normal
D3 (and other device in call C2)	D1C2	Connection Cleared	Normal Clearing, Call Canceled

17.1.21.3.3 Call-Type Monitoring Event Sequences

Table 17-117 Reconnect Call—Call-Type Monitoring Event Sequences

Monitored Call	Connection	Event	Event Cause
C2	D1C2	Connection Cleared	Normal Clearing, Call Canceled
C1	D1C1	Retrieved	Normal Clearing

17.1.21.3.4 Functional Requirements

1. This service is a compound service that is equivalent to a computing function issuing a Clear Connection service for the activeCall ConnectionID and then issuing a Retrieve Call service for the heldCall ConnectionID.
2. If all appearances of a shared bridged device configuration are in the hold state and the heldCall parameter contains an appearance's connection ID in the call, then the other appearances in the device configuration will return to the inactive mode (queued state, Bridged events).
3. When the last connected appearance, in a shared bridged device configuration, is cleared as a result of the Reconnect service, all other device configuration appearance associated with the activeCall connection are also cleared from the call (i.e., Connection Cleared events).
4. If the Hold Call, Consultation Call, or the Alternate Call service was used to place the call on hold and the connectionReservation parameter was used to reserve the media stream channel(s) for the held call (e.g., ISDN bearer channel), then the same media stream channel(s) will be used for the call when it becomes reconnected.

© ISO/IEC 2007 – All rights reserved

Copyright International Organization for Standardization
Provided by IHS under license with ISO
No reproduction or networking permitted without license from IHS
Not for Resale

17.1.22 Retrieve Call

C → S

The Retrieve Call service connects a specified held connection.

Figure 17-25 Retrieve Call Service

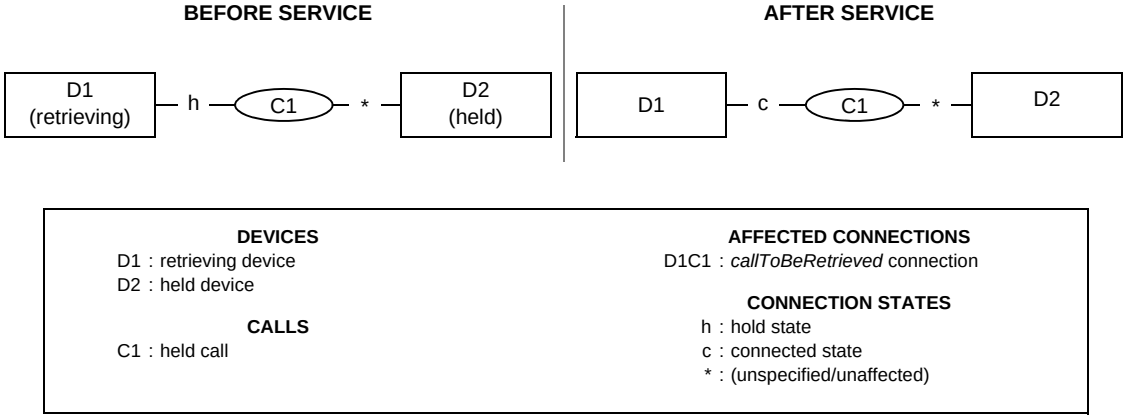

17.1.22.1 Service Request

Table 17-118 Retrieve Call—Service Request

Parameter Name	Type	M/ O/C	Description
callToBeRetrieved	ConnectionID	M	Specifies the held connection to be retrieved.
security	CSTASecurityData	O	Specifies timestamp information, message sequence number, and security information.
privateData	CSTAPrivateData	O	Specifies non-standardized information.

17.1.22.2 Service Response

The capability exchange services describe the type of acknowledgement model (atomic or multi-step) that the switching function supports for this service request.

17.1.22.2.1 Positive Acknowledgement

Table 17-119 Retrieve Call—Positive Acknowledgement

Parameter Name	Type	M/ O/C	Description
security	CSTASecurityData	O	Specifies timestamp information, message sequence number, and security information.
privateData	CSTAPrivateData	O	Specifies non-standardized information.

17.1.22.2.2 Negative Acknowledgement

The negative acknowledgement error codes are described in 12.2.14, “ErrorValue”, on page 115.

17.1.22.3 Operational Model

© ISO/IEC 2007 – All rights reserved

Copyright International Organization for Standardization
Provided by IHS under license with ISO
No reproduction or networking permitted without license from IHS
Not for Resale

17.1.22.3.1 Connection State Transitions

Table 17-120 Retrieve Call—Connection State Transitions

Connection	Initial State (Required)	Final State
D1C1 (callToBeRetrieved)	Hold	Connected
D2C1 (and any other connections in call C1)	(Unspecified)	(Unaffected; no transition due to this service).

17.1.22.3.2 Device-Type Monitoring Event Sequences

Table 17-121 Retrieve Call—Device-Type Monitoring Event Sequences

Monitored Device	Connection	Event	Event Cause
D1 (retrieving device)	D1C1	Retrieved	Normal
D2 (and any other devices in call C1)	D1C1	Retrieved	Normal

17.1.22.3.3 Call-Type Monitoring Event Sequences

Table 17-122 Retrieve Call—Call-Type Monitoring Event Sequences

Monitored Call	Connection	Event	Event Cause
C1	D1C1	Retrieved	Normal

17.1.22.3.4 Functional Requirements

1. The Retrieve Call service may only be requested for a connection at a device's physical element if there is no other connected connection already present at the device's physical element. A device's physical elements can only interact with one voice call at a time so if an attempt is made to retrieve a call while another voice call is connected, the switching function sends a negative acknowledgement to the Retrieve Call service request.
2. If the Hold Call, Consultation Call, or the Alternate Call service was used to place the call on hold and the connectionReservation parameter was used to reserve the media stream channel(s) for the held call (e.g., ISDN bearer channel), then the same media stream channel(s) will be used for the call when it becomes reconnected.
3. There may or may not be a media stream channel(s) available for the call on hold. In the case where a media stream channel(s) is not available, the switching function is unable to comply with the service request. In this case the switching function will send either a negative acknowledgement or the Service Completion Failure event, depending upon the acknowledgement model.
4. If all appearances of a shared-bridged or exclusive-bridged device configuration are in the hold state and the callToBeRetrieved parameter contains an appearance's connection ID in the call, then the other appearances in the device configuration will return to the inactive mode (queued state, Bridged events) in the case of shared-bridging or the blocked mode (fail state, failed events) in the case of exclusive bridging.

17.1.23 Send Message C → S

The Send Message service allows the computing function to send a message to one or more devices. The message, composed of one or more MIME body parts, is included in the Send Message service request.

This service can be used to send messages for many different types of applications (Instant Messaging, Email, Pager, and Short Message Service (SMS), etc).

--`,,```,,,,````-`-`,,`,,`,`,,`---
© ISO/IEC 2007 – All rights reserved
Copyright International Organization for Standardization
Provided by IHS under license with ISO
No reproduction or networking permitted without license from IHS
Not for Resale

A message created by the Send Message service creates a non-interactive CSTA call (i.e., a call with only one device associated with the call at any time). This is different from a CSTA call created by the Make Call service which is usually associated with more than one device.

Initially a connection is created with the calling device for each destination device provided in the service request. After the connection is established then each message is diverted to its specified destination device.

The list of CSTA ConnectionIDs that were created at the calling device is provided in the positive acknowledgement. The CSTA ConnectionIDs can be used to track the movement of the message throughout CSTA devices and can be used to manage the message using CSTA services.

Figure 17-26 Send Message Service

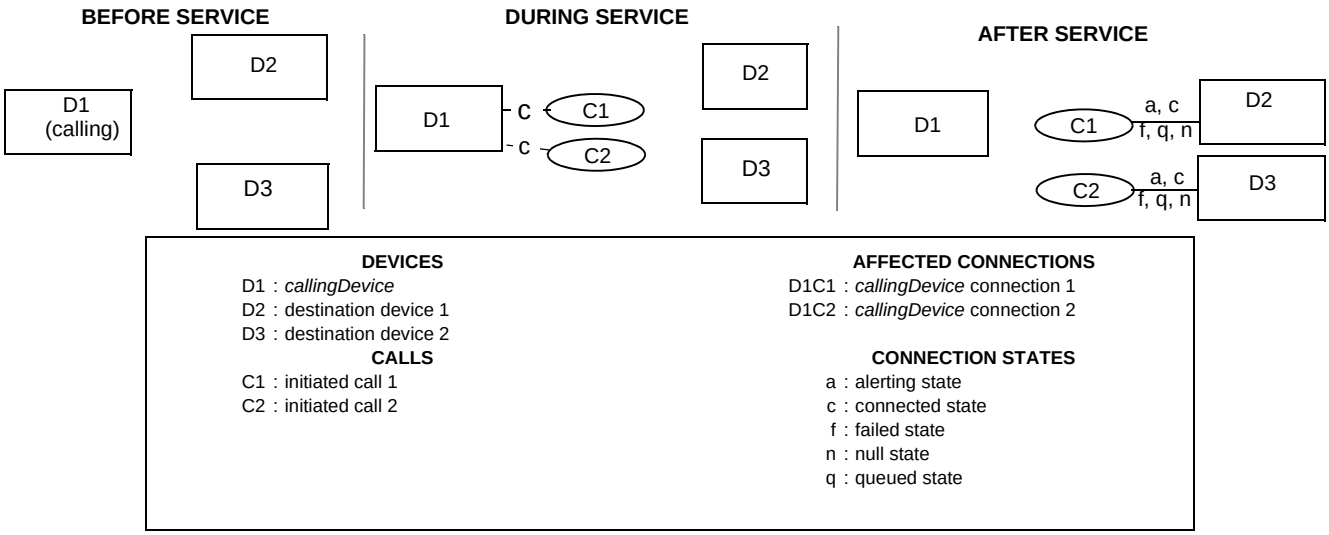

In the above figure, a unique connection has been established at the calling device for each message destination specified in the service request. After the service is completed, the message(s) have been diverted from the calling device.

17.1.23.1 Service Request

Table 17-123 Send Message—Service Request

Parameter Name	Type	M/ O/C	Description
callingDevice	DeviceID	M	Specifies the calling/originating device. This is the device on whose behalf the message is being sent. Note that this device may be a device that represents a group of devices. In this case the callingDevice in the service request is different from the actual calling device.
destinationDevices	List of DeviceID	M	Specifies the list of devices where the message is to be sent.

© ISO/IEC 2007 – All rights reserved

Copyright International Organization for Standardization
Provided by IHS under license with ISO
No reproduction or networking permitted without license from IHS
Not for Resale

Table 17-123 Send Message—Service Request (continued)

Parameter Name	Type	M/ O/C	Description
messageInfo	MessageInfo	M	Specifies the message to be sent. The message consists of one or more parts. Each part consists of: • contentTypeAndSubtype (O) Characters. A character string indicating the IANA assigned media content type and subtype. If this component is omitted the default is “text/plain”. • contents (M) Characters. A sequence of characters representing the contents of the message part. • contentsLength (O) Value. The length of the contents associated with the message part, in bytes.
accountCode	AccountInfo	O	Specifies the account code to associate with the new call.
authCode	AuthCode	O	Specifies the authorization code to allow the call.
correlatorData	CorrelatorData	O	Specifies the correlator data to associate with the call. This parameter can be used to associate multiple messages to the same “conversation”.
callCharacteristics	CallCharacteristics	O	Specifies the high level characteristics (Priority call, for example) to be associated with the call. See 12.2.4, “CallCharacteristics”, on page 108 for the complete set of possible values. If the supported characteristics cannot be honoured, the switching function shall reject the service request.
mediaCallCharacteristics	MediaCallCharacteristics	O	This specifies the media characteristics to be associated with the call being made. If this parameter is not present then the media class is Message.
subjectOfCall	SubjectOfCall	O	Specifies the subject/intent of the call.
languagePreferences	LanguagePreferences	O	Specifies the language preferences to be associated with the call.
security	CSTASecurityData	O	Specifies timestamp information, message sequence number, and security information.
privateData	CSTAPrivateData	O	Non-standardized information.

17.1.23.2 Service Response

The capability exchange services describe the type of acknowledgement model (atomic or multi-step) that the switching function supports for this service request.

17.1.23.2.1 Positive Acknowledgement

Table 17-124 Send Message—Positive Acknowledgement

Parameter Name	Type	M/ O/C	Description
connectionList	list of ConnectionIDs	M	Specifies the connections that have been created at the calling device. Note that the calling device parameter in the service request may be different from the deviceID in the connectionID of callingDevice in the positive acknowledgement (when the callingDevice in the service request represents a group of stations, for example).

© ISO/IEC 2007 – All rights reserved

Copyright International Organization for Standardization
Provided by IHS under license with ISO
No reproduction or networking permitted without license from IHS
Not for Resale

Table 17-124 Send Message—Positive Acknowledgement (continued)

Parameter Name	Type	M/ O/C	Description
mediaCallCharacteristics	MediaCallCharacteristics	C	This specifies the adjusted media characteristics for the call being made. This parameter shall be provided if the call characteristics have been adjusted, otherwise it is optional.
security	CSTASecurityData	O	Specifies timestamp information, message sequence number, and security information.
privateData	CSTAPrivateData	O	Specifies non-standardized information.

17.1.23.2.2 Negative Acknowledgement

The negative acknowledgement error codes are described in 12.2.14, “ErrorValue”, on page 115.

17.1.23.3 Operational Model

17.1.23.3.1 Connection State Transitions

This section assumes one message is being sent. In the case where the service request indicates multiple destinations, there would be multiple calls established and diverted from the calling device.

Table 17-125 Send Message—Connection State Transitions

Connection	Initial State (Required)	Transient State (See Note 1)	Final State
D1C1 (callingDevice)	Null	Connected	Null
D2C1 (called)	Null	Null	Alerting, Connected, Queued, Fail, or Null (Null if call moves away from the originally called device [i.e., forwarded]).

1. For each message that is to be sent, a connection is established at the calling device before it is diverted to its destination device.

17.1.23.3.2 Device-Type Monitoring Event Sequences

This section assumes one message is being sent. In the case where the service request indicates multiple destinations, there would be multiple calls established and diverted from the calling device.

Table 17-126 Send Message—Device-Type Monitoring Event Sequences

Monitored Device	Connection	Event	Event Cause
D1 (calling device)	D1C1	Originated	Normal
	D1C1	Diverted	Normal
D2 (called device)	D2C1	Events depend on the type of device (ACD, extension, external device, etc.) and features activated at it at the time of this service (i.e., Forward, Do Not Disturb, etc.). (see item #1)	

© ISO/IEC 2007 – All rights reserved

17.1.23.3.3 Call-Type Monitoring Event Sequences

Table 17-127 Send Message —Call-Type Monitoring Event Sequences

Monitored Call	Connection	Event	Event Cause
C1	D1C1	Originated	Normal
	D1C1	Diverted	Normal
	D2C1	Events depend on the type of device (ACD, extension, external device, etc.) and features activated at it at the time of this service (i.e., Forward, Do Not Disturb, etc.). (see item #1)	

17.1.23.3.4 Functional Requirements

1. A message created by the Send Message service is modeled as a single non-interactive CSTA call. This non-interactive call is independent of any other call. The correlatorData parameter can be used by an application to associate several of these non-interactive calls to a specific “conversation” or “dialog” between users.
2. If an application wants to establish an interactive call between users for the purpose of exchanging messages (e.g. an Internet Chat session), it should use the Make Call service to establish a CSTA call (specifying a mediaClass in mediaCallCharacteristics of “chat” and specifying via connectionInformation that no media channels should be allocated for the call) and then use the Send User Information service to send the messages.
3. The ability to send messages to a device, the timing of when the information can be sent, and the size of the data that can be sent, depends upon the switching function’s capabilities and the underlying signalling network.
4. If the validation of the Send Message service fails for any reason, the computing function receives a negative acknowledgement, and no ConnectionIDs will have been created.
5. The Send Message positive response only indicates that the request to send a message(s) has been accepted. It does not indicate that the message has been received by the intended destination. If a service request results in a postitive reponse, but a message was unable to be diverted to a destination device, the switching function shall indicate that the connection associated with the message at the calling device has failed (Failed event) and then cleared (Connection Cleared). The connectionID associated with the cleared connection shall be included in the list of connections in the positive acknowledgement. The application should monitor the calling device to determine if a message has been diverted or failed.
6. Call Forwarding and Do Not Disturb features for the calling device are not honoured for the call being made.
7. All active features are honoured for the called device.
8. The switching function may or may not adjust the media characteristics and connection information that were supplied on the Send Message service request (Use the capabilities exchange services to determine which feature the switching function supports). If the switching function supports adjusting the characteristics/connection information and if the original characteristics/connection information cannot be provided the service request will be rejected with an appropriate error code. If the switching function can adjust the characteristics/connection information, the positive acknowledgement will contain the adjusted value or values. If the computing function determines that the adjusted values are not adequate, it can terminate the call (e.g., Clear Connection).
9. The callingDevice parameter in the Send Message service request may represent a group of devices from which the actual calling device is selected. In this case, the callingDevice parameter in subsequent events shall refer to the actual calling device. In addition, the Originated event contains a parameter

© ISO/IEC 2007 – All rights reserved

Copyright International Organization for Standardization
Provided by IHS under license with ISO
No reproduction or networking permitted without license from IHS
Not for Resale

(originatingDevice) that represents the group of devices (the callingDevice parameter passed in service request).

10. The Send Message service can be used for content adaptation - where the switching function modifies the format of the messageContents to match the mediaCallCharacteristics in the service request and/or the characteristics of the destinationDevice. For example, a voice encoded message in the messageInfo parameter in the service request could be converted to a plain text formatted message for display on a device. This content adaptation is switching function specific.
11. The mediaCallCharacteristics parameter can provide protocol specific information via the switchingSubDomainInformationElements parameter. This can be used to provide SIP-specific header information , for example. The use of this protocol specific information is switching function specific.

17.1.24 Single Step Conference Call

C → S

The Single Step Conference Call joins a new device into an existing call.

This service can be repeated to make n-device conference calls (subject to switching function limits).

This service is distinguished from the Join Call service by the way the device being added to the call perceives the direction of the resulting connection (e.g. alerts). In the case of the Join Call service, the device generates an outgoing connection (e.g. prompts). This affects the parameters associated with the service and the events flowing as a result of the service.

Figure 17-27 Single Step Conference Call Service

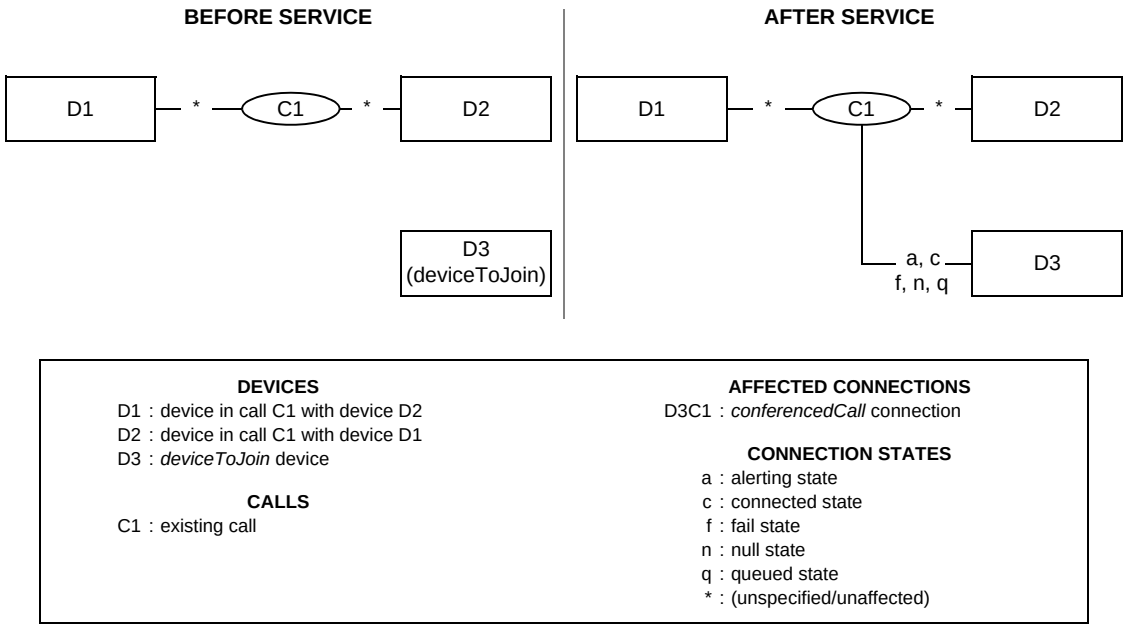

Note that the activeCall connection in the service request may be either D1C1 or D2C1.

17.1.24.1 Service Request

Table 17-128 Single Step Conference Call—Service Request

Parameter Name	Type	M/ O/C	Description
activeCall	ConnectionID	M	Specifies an existing connection in the call to which a new device is to be added.

© ISO/IEC 2007 – All rights reserved

Copyright International Organization for Standardization
Provided by IHS under license with ISO
No reproduction or networking permitted without license from IHS
Not for Resale

Table 17-128 Single Step Conference Call—Service Request (continued)

Parameter Name	Type	M/ O/C	Description
deviceToJoin	DeviceID	M	Specifies the device that is to be added to the call.
participationType	Enumerated	O	Specifies the type of participation the added device has in the resulting call. The complete set of possible values is: • Active (default) - The added device actively participates in the resulting conference call. As a result, the flow direction of the deviceToJoin's connection (i.e., conferencedCall) will be Transmit and Receive. • Silent - The added device can listen but cannot actively participate in the resulting conference call. As a result, the flow direction of the deviceToJoin's connection (i.e., conferencedCall) will be Receive. • None - The added device cannot actively participate in the resulting conference call. As a result, the flow direction of the deviceToJoin's connection (i.e., conferencedCall) will be None.
accountCode	AccountInfo	O	Specifies the account code to associate with the call.
authCode	AuthCode	O	Specifies the authorization code to allow the call.
correlatorData	CorrelatorData	O	Specifies the correlator data to associate with the call.
userData	UserData	O	Specifies the user data to be sent to parties in the call.
subjectOfCall	SubjectOfCall	O	Specifies the subject/intent of the call.
languagePreferences	LanguagePreferences	O	Specifies the language preferences to be associated with the call.
security	CSTASecurityData	O	Specifies timestamp information, message sequence number, and security information.
privateData	CSTAPrivateData	O	Specifies non-standardized information.

17.1.24.2 Service Response

The capability exchange services describe the type of acknowledgement model (atomic or multi-step) that the switching function supports for this service request.

17.1.24.2.1 Positive Acknowledgement

Table 17-129 Single Step Conference Call—Positive Acknowledgement

Parameter Name	Type	M/ O/C	Description
conferencedCall	ConnectionID	M	Specifies the callID of the existing active call and the DeviceID of the joining device.
conferencedCallInfo	ConnectionInformation	O	Specifies the connection information associated with the conferencedCall connection. If this parameter is not present, then the connection information is switching function specific.
security	CSTASecurityData	O	Specifies timestamp information, message sequence number, and security information.
privateData	CSTAPrivateData	O	Specifies non-standardized information.

--`,,```,,,,````-`-`,,`,,`,`,,`---
© ISO/IEC 2007 – All rights reserved
Copyright International Organization for Standardization
Provided by IHS under license with ISO
No reproduction or networking permitted without license from IHS
Not for Resale

17.1.24.2.2 Negative Acknowledgement

The negative acknowledgement error codes are described in 12.2.14, “ErrorValue”, on page 115.

17.1.24.3 Operational Model

17.1.24.3.1 Connection State Transitions

Table 17-130 Single Step Conference Call—Connection State Transitions

Connection	Initial State (Required)	Final State
D1C1	(Unspecified)	(Unaffected; no transition due to this service)
D2C1	(Unspecified)	(Unaffected; no transition due to this service)
D3C1 (conferencedCall)	Null	Alerting, Connected, Queued, Fail, or Null (Null if call moves away from D3 [i.e., forwarded]).

17.1.24.3.2 Device-Type Monitoring Event Sequences

Table 17-131 Single Step Conference Call—Device-Type Monitoring Event Sequences

Monitored Device	Connection	Event	Event Cause
D1	D3C1 (conferencedCall)	Note that it is switching function dependent if other events flow before the Conferenced event. (See item #2)	
	D3C1 (conferencedCall)	Conferenced	Silent or Active Participation, or Single Step Conference
	D3C1 (conferencedCall)	Events depend on the type of device (ACD, extension, external device, etc.) and features activated at it at the time of this service (Forward, Do Not Disturb, etc.). (See item #3)	
D2	D3C1 (conferencedCall)	Note that it is switching function dependent if other events flow before the Conferenced event. See Functional Requirement #2.	
	D3C1 (conferencedCall)	Conferenced	Silent or Active Participation, or Single Step Conference
	D3C1 (conferencedCall)	Events depend on the type of device (ACD, extension, external device, etc.) and features activated at it at the time of this service (Forward, Do Not Disturb, etc.). (See Item #3)	
D3 (deviceToJoin)	D3C1 (conferencedCall)	Note that it is switching function dependent if other events flow before the Conferenced event. See Functional Requirement #2.	
	D3C1 (conferencedCall)	Conferenced	Silent or Active Participation, or Single Step Conference
	D3C1 (conferencedCall)	Events depend on the type of device (ACD, extension, external device, etc.) and features activated at it at the time of this service (Forward, Do Not Disturb, etc.). (See Item #3)	

© ISO/IEC 2007 – All rights reserved

Copyright International Organization for Standardization
Provided by IHS under license with ISO
No reproduction or networking permitted without license from IHS
Not for Resale

17.1.24.3.3 Call-Type Monitoring Event Sequences

Table 17-132 Single Step Conference Call—Call-Type Monitoring Event Sequences

Monitored Call	Connection	Event	Event Cause
C1	D3C1	Note that it is switching function dependent if other events flow before the conferenced event. See Functional Requirement #2.	
	D3C1	Conferenced	Silent or Active Participation, or Single Step Conference
	D3C1 (conferencedCall)	Events depend on the type of device (ACD, extension, external device, etc.) and features activated at it at the time of this service (Forward, Do Not Disturb, etc.). (see Item #3)	

1. The event cause is based on the value of the participationType parameter.
   - If it was set to active, then the event cause will be Active Participation.
   - If it was set to silent or none, then the event cause will be Silent Participation.
   - If the switching function cannot determine the type used, then the event cause will be Single Step Conference.
2. If the deviceToJoin is not in the connected state after the Single Step Conference Call service is executed, then normal call progress events will flow regarding the state of this device after the Conferenced event. Devices in the resulting call will hear the call progress associated with the deviceToJoin.
3. Providing of these events by the switching function does not affect the service completion conditions (i.e., a service is considered complete without these events being provided).

17.1.24.3.4 Functional Requirements

1. The call ID in the ConnectionIDs for the resulting conference call is the same as that in the original active call.
2. It is switching function dependent to determine at which point in the call progress a device is actually conferenced into a call. For example, a device may become part of an existing call before it is actually conferenced into a call. In this case, additional events may flow before the Conferenced event. The callID in the ConnectionIDs for these events shall be the same as that in the original active call and shall be the same as in the Conferenced event that follows.
3. The appearances in a shared bridged device configuration are unaffected by this service.
4. This service request does not support the use of a null device identifier or a Diallable Digits format (DD) device identifier that has a partial dialling sequence character (i.e., the ";" character) in it for the deviceToJoin parameter. A complete and valid device identifier shall be provided, otherwise the switching function will reject the service request with a negative acknowledgement.
5. For the new destination device (deviceToJoin), all active features for the device are honoured.
6. If this service is used to add a device into a digital data call, the connection for the deviceToJoin (i.e., conferencedCall) will inherit the characteristics of the call with the exception of connection flow direction and the number of channels used. In these cases, the connection flow direction is dependent on the value of participationType and the number of channels is based on what the switching function will use to allow the deviceToJoin to effectively participate in the call.

© ISO/IEC 2007 – All rights reserved

Copyright International Organization for Standardization
Provided by IHS under license with ISO
No reproduction or networking permitted without license from IHS
Not for Resale

17.1.25 Single Step Transfer Call

C ⟶ S

The Single Step Transfer Call service transfers an existing connection at a device to another device.

This transfer is performed in a single-step, that is the device doing the transfer does not have to place the existing call on hold before issuing the Single Step Transfer Call service.

The transferring connection may be in the Alerting, Connected, Failed, Held, or Queued state.

Figure 17-28 Single Step Transfer Call Service

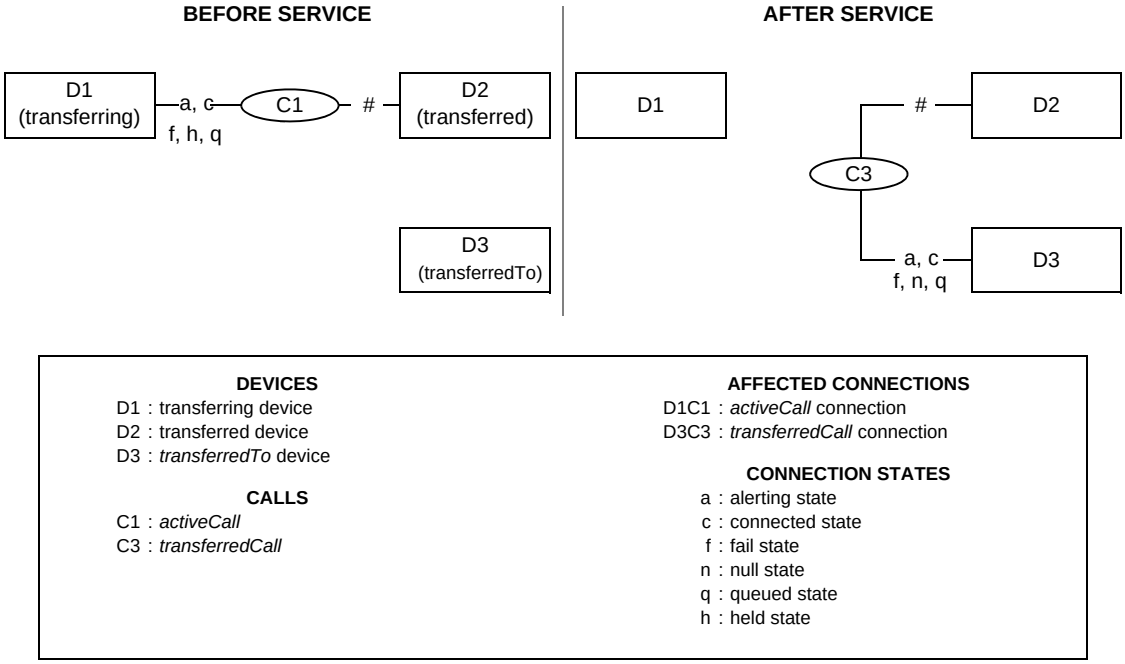

17.1.25.1 Service Request

Table 17-133 Single Step Transfer Call—Service Request

Parameter Name	Type	M/ O/C	Description
activeCall	ConnectionID	M	Specifies the connection in the call to be replaced.
transferredTo	DeviceID	M	Specifies the new called (transferredTo) device.
accountCode	AccountInfo	O	Specifies the account code to associate with the call.
authCode	AuthCode	O	Specifies the authorization code to allow the call.
correlatorData	CorrelatorData	O	Specifies the correlator data to associate with the call.
userData	UserData	O	Specifies the user data to be sent to parties in the call.
subjectOfCall	SubjectOfCall	O	Specifies the subject/intent of the call.
languagePreferences	LanguagePreferences	O	Specifies the language preferences to be associated with the call.
reason	EventCause	O	Specifies the reason the connection is being transferred. See 12.2.15, “EventCause”, on page 126 for a list of possible values.
security	CSTASecurityData	O	Specifies timestamp information, message sequence number, and security information.
privateData	CSTAPrivateData	O	Specifies non-standardized information.

© ISO/IEC 2007 – All rights reserved

Copyright International Organization for Standardization
Provided by IHS under license with ISO
No reproduction or networking permitted without license from IHS
Not for Resale

17.1.25.2 Service Response

The capability exchange services describe the type of acknowledgement model (atomic or multi-step) that the switching function supports for this service request.

17.1.25.2.1 Positive Acknowledgement

Table 17-134 Single Step Transfer Call—Positive Acknowledgement

Parameter Name	Type	M/ O/C	Description
transferredCall	ConnectionID	M	Specifies the ConnectionID of the transferredTo device in the transferred call.
connections	ConnectionList	O	Specifies information on each device/connection that is remaining in the call as a result of the service.
transferredCallInfo	ConnectionInformation	O	Specifies the connection information associated with the transferredCall connection. If this parameter is not present, then the connection information is switching function specific.
security	CSTASecurityData	O	Specifies timestamp information, message sequence number, and security information.
privateData	CSTAPrivateData	O	Specifies non-standardized information.

17.1.25.2.2 Negative Acknowledgement

The negative acknowledgement error codes are described in 12.2.14, “ErrorValue”, on page 115.

17.1.25.3 Operational Model

17.1.25.3.1 Connection State Transitions

Table 17-135 Single Step Transfer Call—Connection State Transitions

Connection	Initial State (Required)	Final State
D1C1 (activeCall)	Connected, Alerting, Failed, Held, Queued	Null
D2C1 and any other Connections in the call C1	(Unspecified)	Null
D2C3	Null	(Inherited from the corresponding connection in call C1)
D3C3 (transferredCall)	Null	Alerting, Connected, Queued, Fail, or Null (Null if call moves away from the originally transferredTo device [i.e., forwarded])

17.1.25.3.2 Device-Type Monitoring Event Sequences

Table 17-136 Single Step Transfer Call—Device-Type Monitoring Event Sequences

Monitored Device	Connection	Event	Event Cause
D1 (transferring)	D1C1	Transferred (see item #3)	Single Step Transfer
D2 (transferred device) (and any other devices in the resulting call)	D1C1	Transferred	Single Step Transfer
	D3C3 (transferredCall)	Events depend on the type of device (ACD, extension, external device, etc.) and features activated at it at the time of this service (Forward, Do Not Disturb, etc.). (see item #4)	

--`,,```,,,,````-`-`,,`,,`,`,,`--- © ISO/IEC 2007 – All rights reserved

Copyright International Organization for Standardization
Provided by IHS under license with ISO
No reproduction or networking permitted without license from IHS Not for Resale

Table 17-136 Single Step Transfer Call—Device-Type Monitoring Event Sequences (continued)

Monitored Device	Connection	Event	Event Cause
D3 (transferredTo)	D3C3 (transferredCall)	Events depend on the type of device (ACD, extension, external device, etc.) and features activated at it at the time of this service (Forward, Do Not Disturb, etc.). (see item #4)	

17.1.25.3.3 Call-Type Monitoring Event Sequences

Table 17-137 Single Step Transfer Call—Call-Type Monitoring Event Sequences

Monitored Call	Connection	Event	Event Cause
C1	D1C1	Transferred (see item #3)	Single Step Transfer
C3	D3C3 (transferredCall)	Events depend on the type of device (ACD, extension, external device, etc.) and features activated at it at the time of this service (Forward, Do Not Disturb, etc.). (see item #4)	

1. If the transferredTo device is not in the connected state after the Single Step Transfer Call service is executed, then normal call progress events will flow regarding the state of this device after the Transferred event.
2. A Connection Cleared event will not be seen for the activeCall ConnectionID; the Transferred event implies that the connection at the transferringDevice has been cleared.
3. If the transferring device stays off-hook and receives busy or blocked tone, the switching function sends a Failed event (event cause of Blocked or Busy) for a call with a different callID (not C1 or C3), followed by a Connection Cleared event.
4. Providing of these events by the switching function does not affect the service completion conditions (i.e., a service is considered complete without these events being provided).
5. If a Bridged event is generated for an Independent Shared Bridged device configuration (see Functional Requirement #5), it is not part of the service completion criteria.

17.1.25.3.4 Functional Requirements

1. The computing function should never assume the reuse of callIDs, although some switching functions may reuse the activeCall callID for the transferredCall callID
2. As a result of this service, the device or devices being transferred may hear call-progress signals for the new device. For example, if the new device answers, the call resumes or if the new device is busy or does not answer, the other devices in the call may receive resulting call progress tones. In either case, the transferring device has left the call and has no further relationship with it.
3. If the Single Step Transfer Call service fails for any reason after the positive acknowledgement is returned, the switching function may return the call to the transferring device. Refer to 6.7.3, “Recall”, on page 73.
4. For the new destination device (transferredTo device), all active features for the device are honoured.
5. Shared Bridged device configurations, when a call is transferred by an appearance (transferring device) all appearances will be cleared from the call (i.e., Connection Cleared events with a cause of Normal Clearing), except when the call that is being transferred is part of an Independent Shared Bridged device configuration and the appearance that is transferring the call is not the last appearance connected into the call. In this case the appearance transferring the call will return to the inactive mode (i.e., Bridged event with a cause of Normal) and the other appearances are unaffected. For more information, refer to Annex , “A.2.3 Shared-Bridged”.

© ISO/IEC 2007 – All rights reserved

Copyright International Organization for Standardization
Provided by IHS under license with ISO
No reproduction or networking permitted without license from IHS
Not for Resale

6. This service request does not support the use of a null device identifier or a Diallable Digits format (DD) device identifier that has a partial dialling sequence character (i.e., the ";" character) in it for the transferredTo parameter. A complete and valid device identifier shall be provided, otherwise the switching function will reject the service request with a negative acknowledgement.
7. If this service is used to single step transfer a digital data call, the connection for the transferredTo device (i.e., transferredCall) will inherit the characteristics of the call.

17.1.26 Transfer Call

C ⟶ S

The Transfer Call service transfers a call held at a device to an active call at the same device. The held and active calls at the transferring device shall be merged into a new call. Also, the Connections of the held and active calls at the transferring device shall become Null and their ConnectionIDs shall be released (i.e., the transferring device is no longer involved with the call).

Figure 17-29 Transfer Call Service

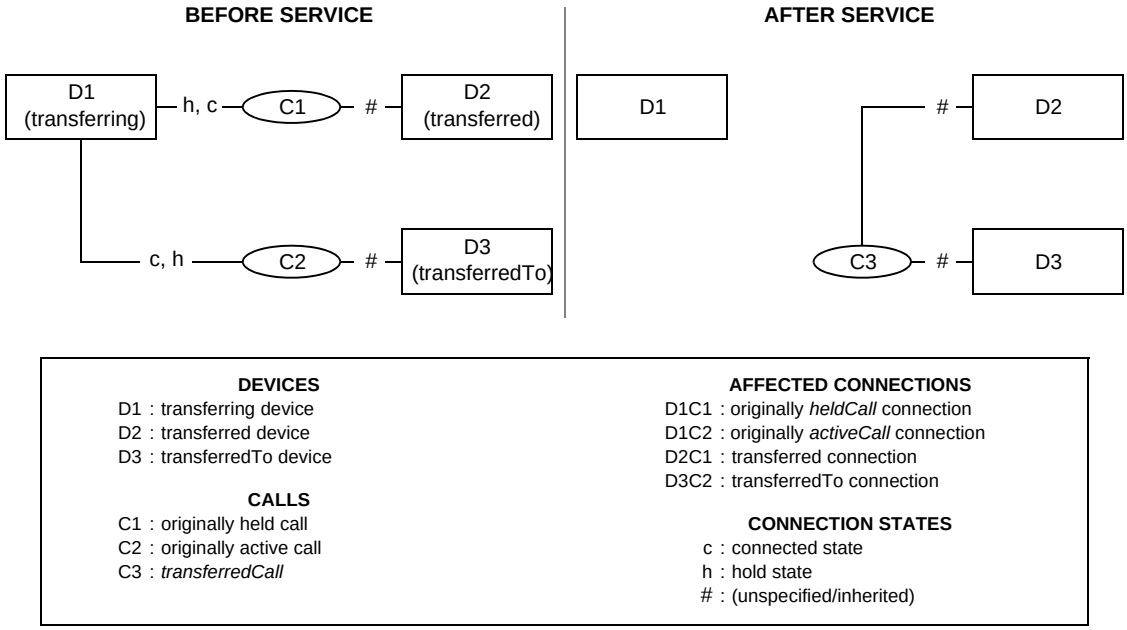

Note that both the D1C1 and D1C2 connections may be held or connected prior to the transfer.

17.1.26.1 Service Request

Table 17-138 Transfer Call—Service Request

Parameter Name	Type	M/ O/C	Description
heldCall	ConnectionID	M	Specifies the held connection.
activeCall	ConnectionID	M	Specifies the active connection.
security	CSTASecurityData	O	Specifies timestamp information, message sequence number, and security information.
privateData	CSTAPrivateData	O	Specifies non-standardized information.

17.1.26.2 Service Response

The capability exchange services describe the type of acknowledgement model (atomic or multi-step) that the switching function supports for this service request.

© ISO/IEC 2007 – All rights reserved

Copyright International Organization for Standardization
Provided by IHS under license with ISO
No reproduction or networking permitted without license from IHS
Not for Resale

17.1.26.2.1 Positive Acknowledgement

Table 17-139 Transfer Call—Positive Acknowledgement

Parameter Name	Type	M/ O/C	Description
transferredCall	ConnectionID	M	Specifies the ConnectionID of the transferredTo device in the resulting call.
connections	ConnectionList	O	Specifies information on each device/connection that is remaining in the call as a result of the service.
transferredCallInfo	ConnectionInformation	O	Specifies the connection information associated with the transferredCall connection. If this parameter is not present, then the connection information is switching function specific.
security	CSTASecurityData	O	Specifies timestamp information, message sequence number, and security information.
privateData	CSTAPrivateData	O	Specifies non-standardized information.

17.1.26.2.2 Negative Acknowledgement

The negative acknowledgement error codes are described in 12.2.14, “ErrorValue”, on page 115.

17.1.26.3 Operational Model

17.1.26.3.1 Connection State Transitions

Table 17-140 Transfer Call—Connection State Transitions

Connection	Initial State (Required)	Final State
D1C1 (heldCall)	Connected, Hold	Null
D1C2 (activeCall)	Connected, Hold	Null
D2C1 and any other connections in call C1	(unspecified)	Null
D3C2 and any other connections in call C2	(unspecified)	Null
D3C3 and any other connections in call C3	Null	(Inherited from the corresponding connection in calls C1 and C2)

17.1.26.3.2 Device-Type Monitoring Event Sequences

Table 17-141 Transfer Call—Device-Type Monitoring Event Sequences

Monitored Device	Connection	Event	Event Cause
D1 (transferring)	(See item #4)	Transferred (see item #C)	Transfer or Normal
D2 (transferred)	(See item #4)	Transferred	Transfer or Normal
D3 (transferredTo)	(See item #4)	Transferred	Transfer or Normal

© ISO/IEC 2007 – All rights reserved

Copyright International Organization for Standardization
Provided by IHS under license with ISO
No reproduction or networking permitted without license from IHS
Not for Resale

17.1.26.3.3 Call-Type Monitoring Event Sequences

Table 17-142 Transfer Call—Call-Type Monitoring Event Sequences

Monitored Call	Connection	Event	Event Cause
C1 or C2	(See item #4)	Transferred (see items #C and #C)	Transfer

1. If the transferredTo device was not in the connected state prior to the Transfer Call service, then normal call progress events will flow after the Transferred event. Devices in the original held call will hear the call progress associated with the connection to the transferredTo device.
2. A Connection Cleared Event will not be provided for the activeCall or heldCall ConnectionIDs. The Transferred event implies connection cleared for the transferring device.
3. If the transferring device stays off-hook and receives busy or blocked tone, the switching function may send a Failed event (event cause of Blocked or Busy) for a different call, followed by a Connection Cleared event.
4. There are multiple connections affected by this service.
5. If a Bridged event is generated for an Independent Shared Bridged device configuration (see Functional Requirement #4), it is not part of the service completion criteria.

17.1.26.3.4 Functional Requirements

1. To get the connections for each of the devices to their initial states, the computing function can either:
   - Use the Consultation Call service to place a call on hold and place a new call.
   - Use the Alternate Call service to place a call on hold and answer an alerting call.

   In either of these cases, if the switching function supports the consultOptions parameter in these services, the computing function shall provide this parameter with a value of either “Transfer Only” or “Unrestricted”.

   Some switching function support a third approach for preparing for the Transfer Call service involving the use of a hold service followed by a Make Call.

   The fourth approach supported by some switching functions involves two held calls at the same device.

   Certain switching functions also support a fifth approach involving two active calls at the same device.

   The computing function should use the capabilities exchange services to determine which of these approaches is supported by the switching function.
2. If the computing function uses the Consultation Call service and specifies the consultOptions parameter with a value of Conference, and then attempts to complete the consultation call with a Transfer Call service, it will be rejected with a negative acknowledgement.
3. If the call is not established at the transferredTo device, the switching function may return the call to the transferring device. Refer to 6.7.3, “Recall”, on page 73.
4. For Shared Bridged device configurations, when a call is transferred by an appearance (transferring device) all appearances will be cleared from the call (i.e., Connection Cleared events with a cause of Normal Clearing), except when the call that is being transferred is part of an Independent Shared Bridged device configuration and the appearance that is transferring the call is not the last appearance connected into the call. In this case the appearance transferring the call will return to the inactive mode (i.e., Bridged event with a cause of Normal) and the other appearances are unaffected. For more information, refer to Annex , “A.2.3 Shared-Bridged”.

© ISO/IEC 2007 – All rights reserved
Copyright International Organization for Standardization
Provided by IHS under license with ISO
No reproduction or networking permitted without license from IHS
Not for Resale

5. The computing function should never assume the reuse of callIDs, although some switching functions may reuse one or the other.

17.2 Events

Table 17-143 Call Control Events Summary

Call Control Event	Description	Pg.
17.2.1 Bridged	Indicates that an appearance at a shared bridged device configuration has been placed into an inactive mode (i.e., queued state).	301
17.2.2 Call Cleared	Indicates that all devices have been removed from an existing call.	303
17.2.3 Conferenced	Indicates that the conferencing device has conferenced itself or another device with an existing call.	306
17.2.4 Connection Cleared	Indicates that a device in a call has disconnected or dropped out from a call.	311
17.2.5 Delivered	Indicates that a call is being presented to a device in either the Ringing or Entering Distribution modes of the alerting state.	315
17.2.6 Digits Dialled	Indicates that a call or feature is being attempted from a device and that a portion of the dialling sequence has been completed.	320
17.2.7 Diverted	Indicates that a call has been diverted from a device.	322
17.2.8 Established	Indicates that a device has answered or has been connected to a call.	327
17.2.9 Failed	Indicates that a call cannot be completed and/or a connection has entered the Fail state.	332
17.2.10 Held	Indicates that an existing call has been put on hold.	337
17.2.11 Network Capabilities Changed	Indicates that a situation occurred during a call's progress in a public or private network that modifies its signalling capability (i.e., inter-networking).	339
17.2.12 Network Reached	Indicates that a call has been connected to an external network using a Network Interface Device (e.g., trunk, CO Line).	342
17.2.13 Offered	Indicates that a call is in a pre-delivery state at a device (prior to ringing indication or delivering ringback, for example).	346
17.2.14 Originated	Indicates that a call is being attempted from a device.	351
17.2.15 Queued	Indicates that a call has been queued.	354
17.2.16 Retrieved	Indicates that a previously held call has been retrieved.	358
17.2.17 Service Initiated	Indicates that a device has gone off-hook for service or is being prompted to go off-hook.	359
17.2.18 Transferred	Indicates that an existing call has been transferred to another device and that the device transferring the call has been dropped from the call.	362

17.2.1 Bridged

The Bridged event indicates that an appearance at a shared bridged device configuration has been placed into an inactive mode (i.e., queued state). See the device configuration section for more details on shared bridged device configurations,

Common situations that generate this event include:

- When the first appearance in a shared bridged device configuration appearance connects into the call at the device (i.e., Answer Call) (manual and service request initiated), the other appearances enter the inactive mode.
- When the first appearance in a shared bridged device configuration leaves a call at the device and at least one appearance is still connected into the call. (i.e., Clear Connection) (manual and service request initiated).

© ISO/IEC 2007 – All rights reserved

Copyright International Organization for Standardization
Provided by IHS under license with ISO
No reproduction or networking permitted without license from IHS
Not for Resale

- When the first appearance in a shared bridged device configuration retrieves a call and the other appearances return to the inactive mode.

Figure 17-30 Bridged Event

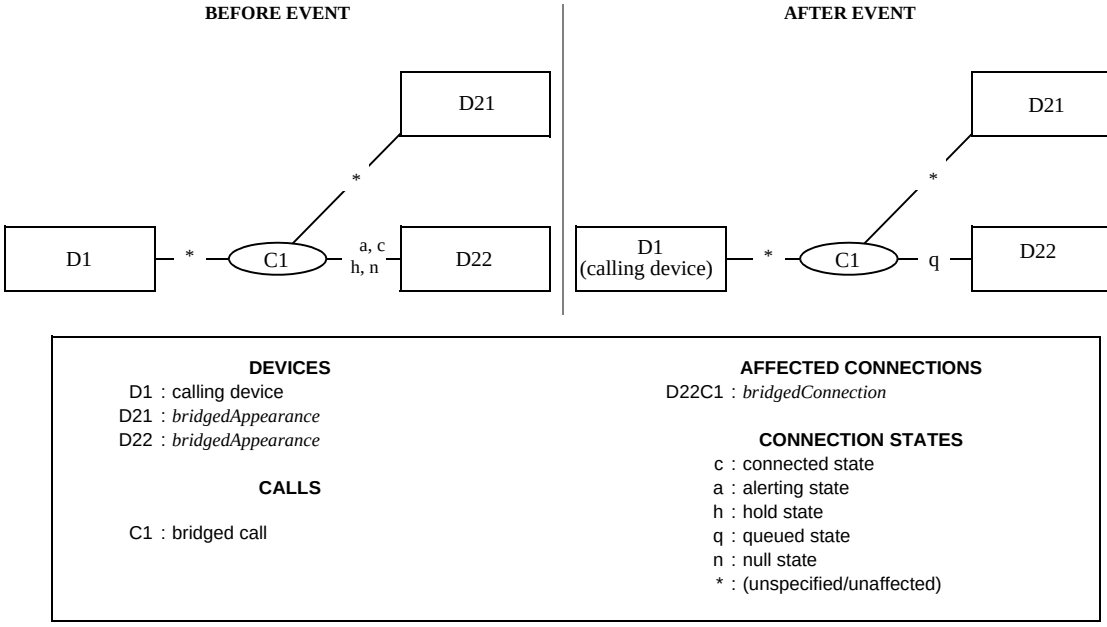

17.2.1.1 Event Parameters

Table 17-144 Bridged—Event Parameters

Parameter Name	Type	M/ O/C	Description
monitorCrossRefID	MonitorCrossRefID	M	Associates the event to an established monitor.
bridgedConnection	ConnectionID	M	Specifies the connection of the appearance that was placed in the inactive mode.
bridgedAppearance	SubjectDeviceID	M	Specifies the appearance which was placed in the inactive mode.
localConnectionInfo	LocalConnectionState	C	Specifies the local connection state of the device associated with the Monitor Cross Reference ID. The following are the states of the devices in the call. • For the bridged appearance at the bridged device: Queued • For the other appearances at the bridged device & all other devices left in the call: (unaffected) This parameter is mandatory for events generated for device-type monitors and shall otherwise not be provided.
correlatorData	CorrelatorData	O	Specifies the correlator data associated with the call.
userData	UserData	C	Specifies user information that is related to the call. This parameter is mandatory if user data is sent and the parameter is supported, otherwise it shall not be included.
cause	EventCause	M	Specifies the reason for the event.

© ISO/IEC 2007 – All rights reserved
Copyright International Organization for Standardization
Provided by IHS under license with ISO
No reproduction or networking permitted without license from IHS
Not for Resale

Table 17-144 Bridged—Event Parameters (continued)

Parameter Name	Type	M/ O/C	Description
servicesPermitted	ServicesPermitted	C	Specifies a list of the call control services that can be applied to the local connection. This parameter is mandatory if the switching function supports the Dynamic Feature Availability option (as indicated through the capabilities exchange services), otherwise this parameter is optional.
mediaCallCharacteristics	MediaCallCharacteristics	O	Specifies the media class and media characteristics of the call. See 12.2.18, “MediaCallCharacteristics”, on page 130 for the complete description.
callCharacteristics	CallCharacteristics	O	Specifies the high level characteristics (ACD call, Priority call, etc.) associated with the call. See 12.2.4, “CallCharacteristics”, on page 108 for the complete set of possible values.
bridgedConnectionInfo	ConnectionInformation	O	Specifies the connection information associated with the bridgedConnection connection. If this parameter is not present, then the connection information is switching function specific.
callLinkageData	CallLinkageData	O	Specifies the global call data and thread data associated with the call.
languagePreferences	LanguagePreferences	O	Specifies the language preferences associated with the call.
security	CSTASecurityData	O	Specifies timestamp information, message sequence number, and security information.
privateData	CSTAPrivateData	O	Specifies the non-standardized information attached to the event.

17.2.1.2 Event Causes

Table 17-145 Bridged—Event Causes

Event Cause	Description	Associated Features
Normal	An appearance has been placed into an inactive mode.	Multi-Appearance

17.2.2 Call Cleared

The Call Cleared event is only provided for calls that are being call-type monitored. This event indicates that a call has been cleared and no longer exists within the switching sub-domain. A call is cleared when there is no longer any device associated with the call.

Common situations that generate this event include:

- After the last remaining device disconnects from the call.
- All devices in a call are immediately disconnected from a call such as when a conference controller dissolves a call.
- The computing function issues a Clear Call service request that is successful.

© ISO/IEC 2007 – All rights reserved

Copyright International Organization for Standardization
Provided by IHS under license with ISO
No reproduction or networking permitted without license from IHS
Not for Resale

Figure 17-31 Call Cleared Event

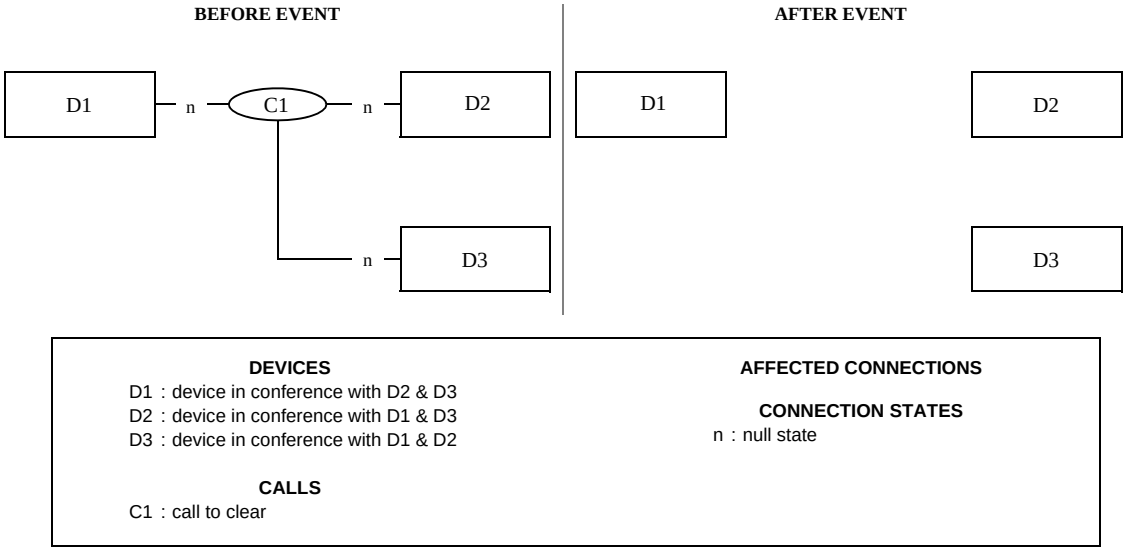

17.2.2.1 Event Parameters

Table 17-146 Call Cleared—Event Parameters

Parameter Name	Type	M/ O/C	Description
monitorCrossRefID	MonitorCrossRefID	M	Associates the event to an established monitor.
clearedCall	ConnectionID	M	Specifies the ConnectionID of the cleared call. Note that the DeviceID shall be omitted in this ConnectionID.
correlatorData	CorrelatorData	O	Specifies the correlator data associated with the call.
userData	UserData	C	Specifies user information that is related to the call. This parameter is mandatory if user data is sent and the parameter is supported, otherwise it shall not be included.
cause	EventCause	M	Specifies the reason for the event. The cause supplied will be the same as the cause supplied on the last Connection Cleared event for the call.
mediaCallCharacteristics	MediaCallCharacteristics	O	Specifies the media class and media characteristics of the call. See 12.2.18, “MediaCallCharacteristics”, on page 130 for the complete description.
callCharacteristics	CallCharacteristics	O	Specifies the high level characteristics (ACD call, Priority call, etc.) associated with the call. See 12.2.4, “CallCharacteristics”, on page 108 for the complete set of possible values.
callLinkageData	CallLinkageData	O	Specifies the global call data and thread data associated with the call.
languagePreferences	LanguagePreferences	O	Specifies the language preferences associated with the call.
security	CSTASecurityData	O	Specifies timestamp information, message sequence number, and security information.
privateData	CSTAPrivateData	O	Non-standardized information attached to the event.

--`,,```,,,,````-`-`,,`,,`,`,,`---

© ISO/IEC 2007 – All rights reserved

Copyright International Organization for Standardization
Provided by IHS under license with ISO
No reproduction or networking permitted without license from IHS

Not for Resale

17.2.2.2 Event Causes

Table 17-147 Call Cleared—Event Causes

Event Cause	Description	Associated Features
Busy	The call was cleared because it reached a busy destination.	Connection Failure
Busy Overflow	The call was cleared because all possible destinations for the call are busy or unavailable and there is no queueing mechanism (ACD, for example) available.	Clear Connection, Clear Call, Connection Failure
Calendar Overflow	The call was cleared because all possible calendar based destinations for the call are unavailable due to the time of the day or the day of the week.	Clear Connection, Clear Call, Connection Failure
Call Back	The call was cleared after a call back or call back message feature was invoked.	Call Back Call-Related, Call Back Message Call-Related
Call Cancelled	The call was cleared without a device going on-hook (via the Clear Call service, for example).	Clear Connection, Clear Call, Connection Failure
Call Not Answered	The call was cleared because it was not answered before a timer elapsed.	Clear Connection, Clear Call, Connection Failure
Capacity Overflow	The call was cleared because all possible destinations are busy or unavailable and the call cannot be queued because the system is already at capacity.	Clear Connection, Clear Call, Connection Failure
Destination Out of Order	The call was cleared because it encountered a destination out of service.	Connection Failure
Do Not Disturb	The call was cleared because the call encountered a destination that has the Do Not Disturb feature set.	Do Not Disturb
Incompatible Destination	The call was cleared because it encountered an incompatible destination.	Connection Failure
Invalid Account Code	The call was cleared because of an invalid account code.	Connection Failure
Invalid Number Format	The call was cleared because of an incorrect dialled number.	Connection Failure
Maintenance	The call was cleared because it encountered a facility or endpoint in a maintenance condition.	Connection Failure
Network Congestion	The call was cleared because it reached a congested network.	External Call
Network Not Obtainable	The call was cleared because it could not reach the destination network.	External Call
Network Out of Order	The call was cleared because it encountered a network that is out of order.	Connection Failure
Network Signal	The call was cleared that involved a device that is outside of the switching sub-domain.	Clear Connection, Clear Call, Connection Failure, External Call
Normal Clearing	The call was cleared (a more specific event cause cannot be provided).	Clear Connection, Clear Call, Any feature
Not Available Bearer Service	The call was cleared because it was requested with bearer capability that is currently not available.	Connection Failure
Not Supported Bearer Service	The call was cleared because it was requested with a bearer capability that is currently not supported.	Connection Failure

© ISO/IEC 2007 – All rights reserved

Copyright International Organization for Standardization
Provided by IHS under license with ISO
No reproduction or networking permitted without license from IHS
Not for Resale

Table 17-147 Call Cleared—Event Causes (continued)

Event Cause	Description	Associated Features
Number Changed	The call was cleared because the called number has been changed to a new number and the call cannot be completed.	Connection Failure
Number Unallocated	The call was cleared because the called number is not allocated to a subscriber.	Connection Failure
Override	The call was cleared because of an Override (e.g. Intrude) feature.	Connection Failure
Path Replacement	The call was cleared due to optimization of network (NID) resources.	Network feature
Queue Time Overflow	The call was cleared because all possible destinations for the call are busy or unavailable and the estimated holding time before the call can be answered is too long.	Clear Connection, Clear Call, Connection Failure
Reorder Tone	The call was cleared because the call encountered a reorder condition.	Connection Failure
Resource not Available	The call was cleared because resources were not available.	Connection Failure
Selected Trunk Busy	The call was cleared because the specific selected Network Interface Device (e.g., trunk, CO Line) is busy.	Connection Failure
Trunks Busy	The call was cleared because there was no available Network Interface Device (e.g. trunk, CO Line).	Connection Failure
Unauthorized Bearer Service	The call was cleared because it was requested with an unauthorized bearer capability.	Connection Failure
Unknown Overflow	The call was cleared because an overflow condition exists but the specific overflow reason is not known.	Clear Connection, Clear Call, Connection Failure

17.2.2.3 Functional Requirements

1. Connection Cleared events shall be sent for all devices in the call before the Call Cleared event is sent. The Call Cleared event can not be used as a substitute for the appropriate Connection Cleared events.
2. The Call Cleared event is only sent to call-type monitors. It is never sent to device-type monitors.

17.2.3 Conferenced

The Conferenced event indicates that the conferencing device has conferenced itself or another device with an existing call and that no devices have been removed from the resulting call.

Common situations that generate this event include:

- Two step conferencing situations (manual and service initiated)
- Single step conferencing situations (manual and service initiated)
- Intrude situations (manual and service initiated)
- Join situations (manual and service initiated)

© ISO/IEC 2007 – All rights reserved

Copyright International Organization for Standardization
Provided by IHS under license with ISO
No reproduction or networking permitted without license from IHS
Not for Resale

Figure 17-32 Conferenced Event—Case A: Two Step Conferencing

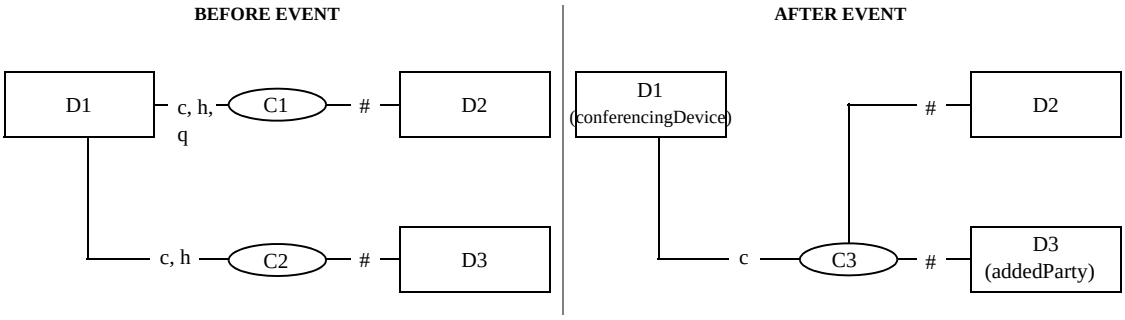

DEVICES
D1 : *conferencingDevice* device
D2 : device in conference with D1 and D3
D3 : *addedParty* device

CALLS*
C1 : primary old call
C2 : secondary old call
C3 : resulting call

* the primary/secondary old call and the primary/secondary old call connections mentioned in this figure are from the perspective of the conferencingDevice (D1). See Functional

AFFECTED CONNECTIONS
D1C1 : *primaryOldCall* connection
D1C2 : *secondaryOldCall* connection
D2C1 : initial call at device D2
D3C2 : initial call at device D3
D1C3 : resulting call at device D1
D2C3 : resulting call at device D2
D3C3 : resulting call at device D3

CONNECTION STATES
c : connected state
h : hold state
q : queued state
: (unspecified/inherited)

Figure 17-33 Conferenced Event—Case B: Single Step Conferencing

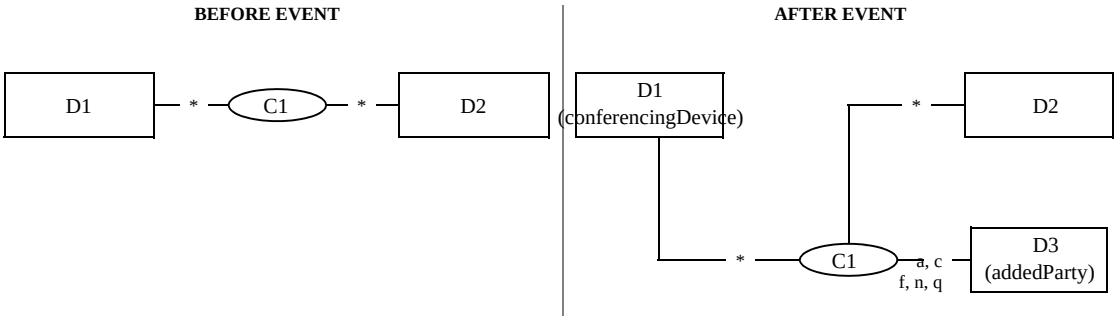

DEVICES
D1 : *conferencingDevice* device
D2 : device in conference with D1 & D3
D3 : *addedParty* device

CALLS
C1 : primary old call
C1 : resulting call (1)

AFFECTED CONNECTIONS
D1C1 : resulting call at device D1
D2C1 : resulting call at device D2
D3C1 : resulting call at device D3

CONNECTION STATES
a : alerting state
c : connected state
f : failed state
n : null state
q : queued state
* : (unspecified/unaffected)

1. Since the Call ID does not change for a Single Step Conference Call, the primary old call and the resulting call are the same.

© ISO/IEC 2007 – All rights reserved

Copyright International Organization for Standardization
Provided by IHS under license with ISO
No reproduction or networking permitted without license from IHS
Not for Resale

Figure 17-34 Conferenced Event—Case C: Join Call

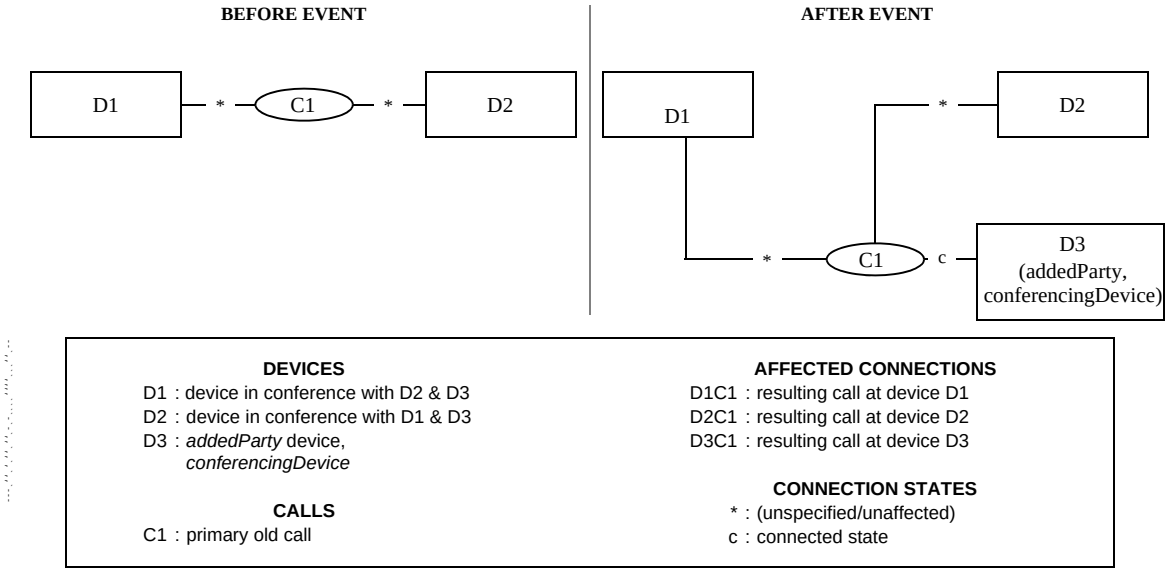

1. Since the Call ID does not change for the Join Call service, the primary old call and the resulting call are the same.

Figure 17-35 Conferenced Event - Case D: Intrude Call

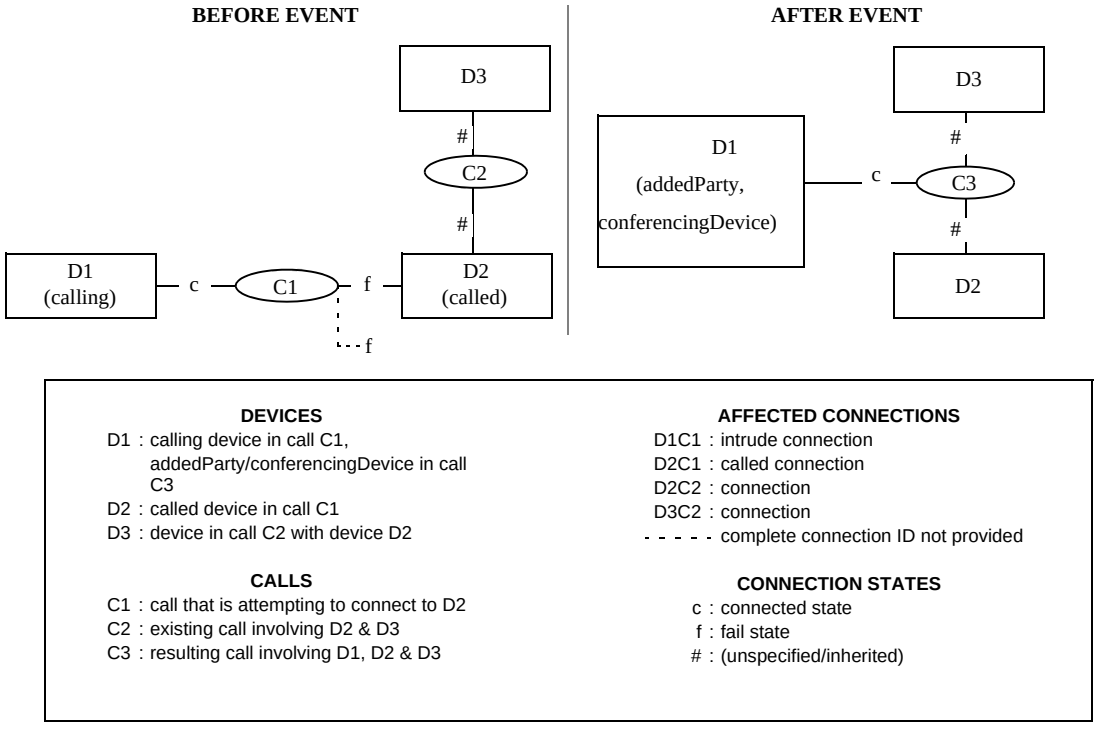

Refer to 6.7.2, “Connection Failure”, on page 71 for a complete description of partial connection IDs.

Refer to 17.1.16, “Intrude Call”, on page 261 for information on how a connection can transit to the connected state.

© ISO/IEC 2007 – All rights reserved
Copyright International Organization for Standardization
Provided by IHS under license with ISO
No reproduction or networking permitted without license from IHS
Not for Resale

17.2.3.1 Event Parameters

Table 17-148 Conferenced—Event Parameters

Parameter Name	Type	M/ O/C	Description
monitorCrossRefID	MonitorCrossRefID	M	Associates the event to an established monitor.
primaryOldCall	ConnectionID	M	Specifies the connection of the primary call. See Functional Requirement #1.
secondaryOldCall	ConnectionID	C	Specifies the connection of the secondary call. If the switching function supports the “fixed-view” option (as indicated by the capability exchange services), this parameter is mandatory. If the switching function supports the “local-view” option, this parameter is mandatory if there are two known calls involved with the conference (before the conference is created) from the perspective of the monitored device, otherwise it shall not be provided. See Functional Requirement #1.
conferencingDevice	SubjectDeviceID [a]	M	Specifies the device ID of the conferencing device.
addedParty	SubjectDeviceID [a]	M	Specifies the device ID of the last device added to the call.
conferenceConnections	ConnectionList	M	Specifies information on each device/ConnectionID in the resulting conference call. See Functional Requirement #2.
localConnectionInfo	LocalConnectionState	C	Specifies the local connection state of the device associated with the Monitor Cross Reference ID. The following are the states of the devices that are in the conference call: • Conferencing device - Connected (or Unaffected for Case B). • Other devices - (See above figures for specific cases of the Conferenced event) This parameter is mandatory for events generated for device-type monitors and otherwise shall not be provided.
correlatorData	CorrelatorData	C	Specifies the correlator data associated with the call. This parameter is mandatory if there is correlator data associated with the call and shall otherwise not be provided.
userData	UserData	C	Specifies user information that is related to the call. This parameter is mandatory if user data is sent and the parameter is supported, otherwise it shall not be included.
cause	EventCause	M	Specifies the reason for the event.
servicesPermitted	ServicesPermitted	C	Specifies a list of the call control services that can be applied to the local connection. This parameter is mandatory if the switching function supports the Dynamic Feature Availability option (as indicated through the capabilities exchange services), otherwise this parameter is optional.
mediaCallCharacteristics	MediaCallCharacteristics	O	Specifies the media class and media characteristics of the call. See 12.2.18, “MediaCallCharacteristics”, on page 130 for the complete description.

© ISO/IEC 2007 – All rights reserved

Copyright International Organization for Standardization
Provided by IHS under license with ISO
No reproduction or networking permitted without license from IHS
Not for Resale

Table 17-148 Conferenced—Event Parameters (continued)

Parameter Name	Type	M/ O/C	Description
callCharacteristics	CallCharacteristics	O	Specifies the high level characteristics (ACD call, Priority call, etc.) associated with the call. See 12.2.4, “CallCharacteristics”, on page 108 for the complete set of possible values.
callLinkageDataList	List	C	Specifies the global call data and thread data associated with the call. This parameter is mandatory if the switching function supports the call linkage feature otherwise it shall not be provided. The parameter consists of the following components: • newCallLinkageData (M) CallLinkageData - specifies the call linkage data associated with the resulting call. • oldCallLinkageData (M) CallLinkageData - specifies the call linkage data that was discarded as the result of the conference.
languagePreferences	LanguagePreferences	O	Specifies the language preferences associated with the call.
deviceHistory	DeviceHistory	O	Specifies the list of devices which were previously associated with the call (e.g. redirecting, transferring, clearing devices).
security	CSTASecurityData	O	Specifies timestamp information, message sequence number, and security information.
privateData	CSTAPrivateData	O	Non-standardized information attached to the event.

a. Note that SubjectDeviceID refers to a parameter type—not the subject device of the Conferenced event. This parameter type is used to represent the two devices in this event because the two devices are affected by the generation of this event (i.e., the conferencing device and the addedParty device). However, there is only one device which is the subject of the event and that is the conferencing device. For more details on the SubjectDeviceID parameter type, see 12.3.30, “SubjectDeviceID”, on page 148.

17.2.3.2 Event Causes

Table 17-149 Conferenced—Event Causes

Event Cause	Description	Associated Features
Active Participation	The call was conferenced and the added device can actively participate in the call. This feature is typically used to allow intrusion by a supervisor with the ability to speak and listen into an agent call.	Single Step Conference Call, Intrude Call, Join Call
Conference	The call was conferenced because of a two step conference.	Conference Call, Conference
Join Call	The call was conferenced because of a Join Call.	Join Call
Network Signal	The call was involved in a conference located outside of the switching sub-domain.	External Call
Normal	The call was conferenced (a more specific event cause cannot be provided).	Conference
Override	The call was conferenced because of an override (e.g., Intrude Call) feature. This event cause may be used when the participation type (active, silent) cannot be provided.	Intrude Call

© ISO/IEC 2007 – All rights reserved

Copyright International Organization for Standardization
Provided by IHS under license with ISO
No reproduction or networking permitted without license from IHS
Not for Resale

Table 17-149 Conferenced—Event Causes (continued)

Event Cause	Description	Associated Features
Silent Participation	The call was conferenced and the added device can silently participate in the call. This feature allows a third party, such as an ACD agent supervisor, to join the call. The joining party can hear the entire conversation, but cannot be heard by either originating party. The feature, sometimes called Silent Intrusion, may provide a tone to one or both parties to indicate that the joining party is listening to the call.	Single Step Conference Call, Intrude Call, Join Call
Single Step Conference	The call was conferenced because of a single step conference.	Single Step Conference Call, Intrude Call

17.2.3.3 Functional Requirements

1. The contents of the primaryOldCall and the secondaryOldCall parameters may be either a “fixed view” or a “local view” of the connections at a device before the conference has been completed. The switching function indicates which view it provides via the connectionView parameter in the capability exchange services.
    - fixed view - for each conferenced event generated by monitors placed on different devices in a call, the switching function provides the same information in the primaryOldCall and the secondaryOldCall parameters independent of the monitorType (call or device-type monitor) and independent of the role of the device in the conference (conferencingDevice, addedParty, etc.). The meaning of these parameters for the fixed-view are:
        - primaryOldCall - specifies the first call visible at the conferencingDevice.
        - secondaryOldCall - specifies the second call visible at the conferencingDevice.
    - local view - for each conferenced event generated by monitors placed on different devices in a call, the switching function provides different information in the primaryOldCall and the secondaryOldCall parameters that depends upon which call was made visible first, from the perspective of the monitored device. The meaning of these parameters for the local-view are:
        - primaryOldCall - specifies the first call visible at the monitored device. For example, for a device-type monitor placed on the conferencingDevice (two step conference), this is the first call placed on hold (C1). For a device-type monitor placed on the addedParty device, this is the first (and only) call involved in the conference (C2) from the perspective of the monitored device.
        - secondaryOldCall - specifies the second call visible at the monitored device. For example, for a device-type monitor placed on the conferencingDevice (two step conference), this is the consultation call (C2). For a monitor placed on the addedParty device, there is no secondaryOldCall parameter.
2. The conferenceConnections parameter is a list that contains the new ConnectionID and may contain the old ConnectionID, the DeviceID (values such as ANI, etc.), and for externally located devices the associated Network Interface DeviceID.
3. The computing function should never assume the reuse of callIDs, although some switching functions may reuse one or the other.

17.2.4 Connection Cleared

The Connection Cleared event indicates that a single device has disconnected or dropped out of a call.

© ISO/IEC 2007 – All rights reserved

Copyright International Organization for Standardization
Provided by IHS under license with ISO
No reproduction or networking permitted without license from IHS
Not for Resale

Common situations that generate this event include:

- A user manually terminates the call (by going on-hook, for example).
- The Clear Connection service is successfully invoked.
- Connection clears as a result of some other service's operation.

Figure 17-36 Connection Cleared Event

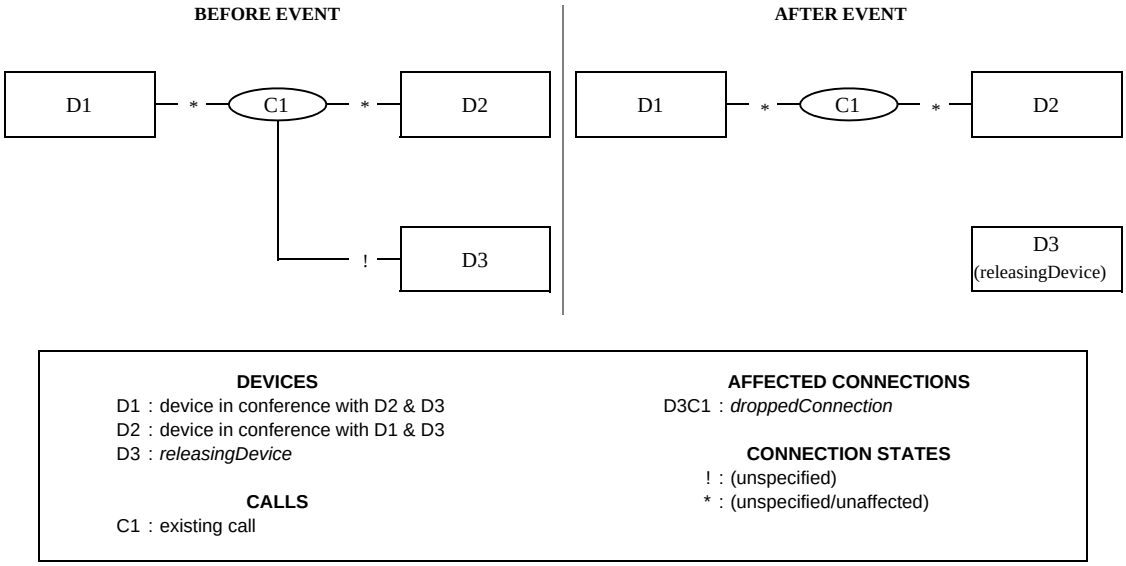

17.2.4.1 Event Parameters

Table 17-150 Connection Cleared—Event Parameters

Parameter Name	Type	M/ O/C	Description
monitorCrossRefID	MonitorCrossRefID	M	Associates the event to an established monitor.
droppedConnection	ConnectionID	M	Specifies the connection of the device that was dropped from the call.
releasingDevice	SubjectDeviceID	M	Specifies the device that dropped from the call.
localConnectionInfo	LocalConnectionState	C	Specifies the local connection state of the device associated with the Monitor Cross Reference ID. The following are the states of the devices in the call. • For the clearing device: Null • For the other devices left in the call: (unaffected) This parameter is mandatory for events generated for device-type monitors and otherwise shall not be provided.
correlatorData	CorrelatorData	O	Specifies the correlator data associated with the call.
userData	UserData	C	Specifies user information that is related to the call. This parameter is mandatory if user data is sent and the parameter is supported, otherwise it shall not be included.
chargingInfo	ChargingInfo	O	Specifies a total value of charging or currency units for the device that dropped from the call.
cause	EventCause	M	Specifies the reason for the event.

© ISO/IEC 2007 – All rights reserved
Copyright International Organization for Standardization
Provided by IHS under license with ISO
No reproduction or networking permitted without license from IHS
Not for Resale

Table 17-150 Connection Cleared—Event Parameters (continued)

Parameter Name	Type	M/ O/C	Description
servicesPermitted	ServicesPermitted	C	Specifies a list of the call control services that can be applied to the local connection. This parameter is mandatory if the switching function supports the Dynamic Feature Availability option (as indicated through the capabilities exchange services), otherwise this parameter is optional.
mediaCallCharacteristics	MediaCallCharacteristics	O	Specifies the media class and media characteristics of the call. See 12.2.18, “MediaCallCharacteristics”, on page 130 for the complete description.
callCharacteristics	CallCharacteristics	O	Specifies the high level characteristics (ACD call, Priority call, etc.) associated with the call. See 12.2.4, “CallCharacteristics”, on page 108 for the complete set of possible values.
droppedConnectionInfo	ConnectionInformation	O	Specifies the connection information associated with the droppedConnection connection. If this parameter is not present, then the connection information is switching function specific.
callLinkageData	CallLinkageData	O	Specifies the global call data and thread data associated with the call.
languagePreferences	LanguagePreferences	O	Specifies the language preferences associated with the call.
deviceHistory	DeviceHistory	O	Specifies the list of devices which were previously associated with the call (e.g. redirecting, transferring, clearing devices).
security	CSTASecurityData	O	Specifies timestamp information, message sequence number, and security information.
privateData	CSTAPrivateData	O	Non-standardized information attached to the event.

17.2.4.2 Event Causes

Table 17-151 Connection Cleared—Event Causes

Event Cause	Description	Associated Features
Alert Time Expired	The connection was cleared because a timer associated with the Make Predictive call expired.	Make Predictive Call
Busy	The connection was cleared because the call reached a busy destination.	Connection Failure
Busy Overflow	The connection was cleared because all possible destinations for the call are busy or unavailable and there is no queueing mechanism (ACD, for example) available.	Clear Connection, Clear Call, Connection Failure
Calendar Overflow	The connection was cleared because all possible calendar based destinations for the call are unavailable due to the time of the day or the day of the week.	Clear Connection, Clear Call, Connection Failure
Call Back	The connection was cleared after a Call Back or a Call Back Message feature has been invoked.	Call Back Call-Related, Call Back Message Call-Related
Call Cancelled	The connection was cleared without a device going on-hook (via the Clear Call service, for example).	Clear Connection, Clear Call, Connection Failure
Call Not Answered	The connection was cleared because the call was not answered before a timer elapsed.	Clear Connection, Clear Call, Connection Failure

--`,,```,,,,````-`-`,,`,,`,`,,`---

© ISO/IEC 2007 – All rights reserved

Copyright International Organization for Standardization
Provided by IHS under license with ISO
No reproduction or networking permitted without license from IHS
Not for Resale

Table 17-151 Connection Cleared—Event Causes (continued)

Event Cause	Description	Associated Features
Capacity Overflow	The connection was cleared because all possible destinations are busy or unavailable and the call cannot be queued because the system is already at capacity.	Clear Connection, Clear Call, Connection Failure
Destination Detected	The connection was cleared because the call encountered a specific destination.	Make Predictive Call
Destination Not Obtainable	The connection was cleared because the call could not reach the destination.	Connection Failure
Destination Out of Order	The connection was cleared because the call encountered a destination that is out of service.	Connection Failure
Do Not Disturb	The connection was cleared because the call encountered a destination that has the Do Not Disturb feature set.	Do Not Disturb
Incompatible Destination	The connection was cleared because the call encountered an incompatible destination.	Connection Failure
Invalid Account Code	The connection was cleared because of an invalid account code.	Connection Failure
Invalid Number Format	The connection was cleared because of an incorrect dialled number.	Connection Failure
Maintenance	The connection was cleared because it encountered a facility or endpoint in a maintenance condition.	Connection Failure
Network Congestion	The connection was cleared because the call reached a congested network.	External Call
Network Not Obtainable	The connection was cleared because the call could not reach the destination network.	External Call
Network Out of Order	The connection was cleared because the call encountered a network that is out of order.	Connection Failure
Network Signal	The device located outside the switching sub-domain has dropped from the call.	Clear Connection, Clear Call, Connection Failure, External Call
Normal Clearing	The connection was cleared (a more specific event cause cannot be provided).	Clear Connection, Clear Call, Any feature
Not Available Bearer Service	The connection was cleared because the call was requested with a bearer capability that is currently not available.	Connection Failure
Not Supported Bearer Service	The connection was cleared because the call was requested with a bearer capability that is currently not supported.	Connection Failure
Number Changed	The connection was cleared because the called number has been changed to a new number and the call cannot be completed.	Connection Failure
Number Unallocated	The connection was cleared because the called number is not allocated to a subscriber.	Connection Failure
Override	The connection was cleared because of an override (e.g., Intrude Call) feature.	Connection Failure
Queue Cleared	A call is queued in multiple ACD queues and the connection associated with one of the ACD queues was cleared because the call was distributed to an available agent from another ACD queue.	ACD
Path Replacement	The connection was cleared due to optimization of network (NID) resources.	Network feature

© ISO/IEC 2007 – All rights reserved

Copyright International Organization for Standardization
Provided by IHS under license with ISO
No reproduction or networking permitted without license from IHS
Not for Resale

Table 17-151 Connection Cleared—Event Causes (continued)

Event Cause	Description	Associated Features
Queue Time Overflow	The connection was cleared because all possible destinations for the call are busy or unavailable and the estimated holding time before the call can be answered is too long.	Clear Connection, Clear Call, Connection Failure
Reorder Tone	The connection was cleared because the call encountered a reorder condition. When this occurs, the network usually provides Reorder Tone to indicate that a request (call, feature, or supplementary service) was not recognizable. This condition typically results when a user dials a number that is not valid or attempts to obtain a service that is not enabled for that user or device.	Connection Failure
Resource Not Available	The connection was cleared because of resources not available.	Connection Failure
Selected Trunk Busy	The connection was cleared because the specific selected Network Interface Device (e.g., trunk, CO Line) is busy.	Connection Failure
Trunks Busy	The connection was cleared because there was no available Network Interface Device (e.g., trunk, CO Line).	Connection Failure
Unauthorized Bearer Service	The connection was cleared because the call was requested with an unauthorized bearer capability.	Connection Failure
Unknown Overflow	The connection was cleared because an overflow condition exists but the specific overflow reason is not known.	Clear Connection, Clear Call, Connection Failure

17.2.4.3 Functional Requirements

1. A Connection Cleared event will be generated for appearances of a shared bridged device configuration under the following conditions.
   - The call is ended.
   - The appearance permanently drops from the call through some feature/service.
   - The call moves away from the device configuration and none of the appearances are connected into the call.
   - The call moves away from the device configuration and the device configuration is an appearance interdependent shared bridged device configuration.

   The event cause will be Normal Clearing, the droppedConnection will be the connection identifier associated with the appearance and the releasingDevice will depend on the type of referencing model that is supported by the switching function (refer to 6.1.5, “Referencing Devices, Elements, Appearances and Device Configurations”, on page 54).

17.2.5 Delivered

The Delivered event indicates that a call is being presented to a device in either the Ringing or Entering Distribution modes of the alerting state.

Common situations that generate this event include:

- A call has been assigned to a device and that device is alerting.

© ISO/IEC 2007 – All rights reserved

Copyright International Organization for Standardization
Provided by IHS under license with ISO
No reproduction or networking permitted without license from IHS
Not for Resale

- A call has been assigned to a distribution device such as an ACD, routeing device, or hunt group.

Figure 17-37 Delivered Event

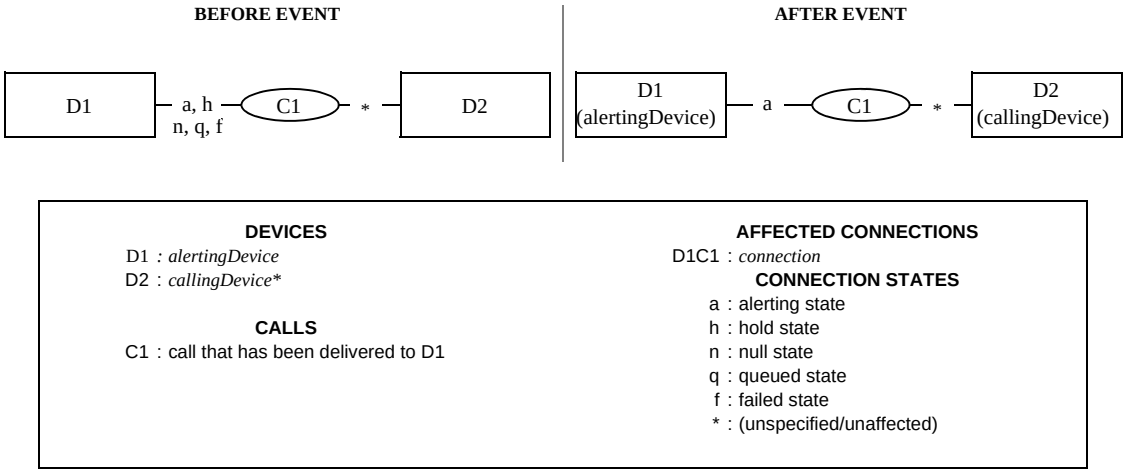

*There are some situations where D1 can be the calling device (e.g. Make Predictive Call).

17.2.5.1 Event Parameters

Table 17-152 Delivered—Event Parameters

Parameter Name	Type	M/ O/C	Description
monitorCrossRefID	MonitorCrossRefID	M	Associates the event to an established monitor.
connection	ConnectionID	M	Specifies the connection that is alerting.
alertingDevice	SubjectDeviceID	M	Specifies the device that is alerting.
callingDevice	CallingDeviceID	M	Specifies the calling device.
calledDevice	CalledDeviceID	M	Specifies the originally called device.
lastRedirectionDevice	RedirectionDeviceID	M	Specifies the previously known redirected from device.
originatingNIDConnection	ConnectionID	O	Specifies the connection of the Network Interface Device (NID) that the call originated from. If this parameter is supported, it shall be provided if there is an originating NID associated with the call, otherwise it shall not be provided. See Functional Requirement #4.
localConnectionInfo	LocalConnectionState	C	Specifies the local connection state of the device associated with the Monitor Cross Reference ID. The following are the states of the devices in the call. • For the alerting device: Alerting • For the calling device: (unaffected) This parameter is mandatory for events generated for device-type monitors and otherwise shall not be provided.
correlatorData	CorrelatorData	C	Specifies the correlator data associated with the call. This parameter is mandatory if there is correlator data associated with the call and shall otherwise not be provided.

© ISO/IEC 2007 – All rights reserved
Copyright International Organization for Standardization
Provided by IHS under license with ISO
No reproduction or networking permitted without license from IHS
Not for Resale

Table 17-152 Delivered—Event Parameters (continued)

Parameter Name	Type	M/ O/C	Description
userData	UserData	C	Specifies user information that is related to the call. This parameter is mandatory if user data is sent and the parameter is supported, otherwise it shall not be included.
cause	EventCause	M	Specifies the reason for the event.
servicesPermitted	ServicesPermitted	C	Specifies a list of the call control services that can be applied to the local connection. This parameter is mandatory if the switching function supports the Dynamic Feature Availability option (as indicated through the capabilities exchange services), otherwise this parameter is optional.
networkCallingDevice	NetworkCallingDeviceID	O	Specifies the original calling device information provided by the network for external incoming calls. This parameter is provided only for external incoming calls.
networkCalledDevice	NetworkCalledDeviceID	O	Specifies the original called device information provided by the network for external incoming calls. This parameter is provided only for external incoming calls.
associatedCallingDevice	AssociatedCallingDeviceID	C	Specifies the Network Interface Device associated with the calling device if the call is an external incoming call. This parameter is mandatory for all external incoming calls and shall not be provided otherwise.
associatedCalledDevice	AssociatedCalledDeviceID	C	For outgoing external calls, this parameter specifies the Network Interface Device associated with the called device. For incoming external calls, this parameter specifies a device within the switching sub-domain associated with the originally called device. This parameter is mandatory for all external outgoing calls and it is optional for external incoming calls.
mediaCallCharacteristics	MediaCallCharacteristics	O	Specifies the media class and media characteristics of the call. See 12.2.18, “MediaCallCharacteristics”, on page 130 for the complete description.
callCharacteristics	CallCharacteristics	O	Specifies the high level characteristics (ACD call, Priority call, etc.) associated with the call. See 12.2.4, “CallCharacteristics”, on page 108 for the complete set of possible values.
connectionInfo	ConnectionInformation	O	Specifies the connection information associated with the alerting connection. If this parameter is not present, then the connection information is switching function specific.
callLinkageData	CallLinkageData	C	Specifies the global call data and thread data associated with the call. This parameter is mandatory if the switching function supports the call linkage feature otherwise it shall not be provided.
subjectOfCall	SubjectOfCall	O	Specifies the subject/intent of the call. This could represent the subject header of an Email (text call) or intent for a voice call, for example.
messageInfo	MessageInfo	O	Specifies the contents of message information associated with a call. The message information consists of one of more items.
languagePreferences	LanguagePreferences	O	Specifies the language preferences associated with the call.

© ISO/IEC 2007 – All rights reserved

Copyright International Organization for Standardization
Provided by IHS under license with ISO
No reproduction or networking permitted without license from IHS
Not for Resale

Table 17-152 Delivered—Event Parameters (continued)

Parameter Name	Type	M/ O/C	Description
deviceHistory	DeviceHistory	O	Specifies the list of devices which were previously associated with the call (e.g. redirecting, transferring, clearing devices).
security	CSTASecurityData	O	Specifies timestamp information, message sequence number, and security information.
privateData	CSTAPrivateData	O	Non-standardized information attached to the event.

17.2.5.2 Event Causes

Table 17-153 Delivered—Event Causes

Event Cause	Description	Associated Features
ACD Busy	The call was delivered to an ACD device that has currently no available agents.	ACD, Consultation Call
ACD Forward	The call was delivered to a new device and is no longer queued at the previous ACD device.	ACD
ACD Saturated	The call was delivered to an ACD device that has currently no internal resources available (including agents).	ACD, Consultation Call
Call Back	The call was delivered to a device because of a previously set call back feature.	Call Back Call-Related
Call Forward	The call was delivered to a device after it was forwarded (any type of forwarding).	Call Forwarding
Call Forward—Busy	The call was delivered to a device after it was forwarded because of a busy condition.	Call Forwarding
Call Forward—Immediate	The call was delivered to a device after it was forwarded (forwarding on all conditions).	Call Forwarding
Call Forward—No Answer	The call was delivered to a device after it was forwarded because of a no answer condition.	Call Forwarding
Conference	The call that was delivered to a device involves a conference resource or is intended to be part of a conference.	Any conference feature
Distributed	The call was delivered to a device because the call has moved from the distribution mechanism (ACD, Hunt) to an available device associated with the distribution mechanism.	ACD, Routeing Services
Entering Distribution	The call was delivered to a distribution mechanism (ACD, Hunt) for the purpose of being distributed.	ACD, Routeing Services
Key Operation	The call was delivered to a device that has an appearance in a call appearance, bridged, or hybrid device configuration.	Multiple Appearance
Multiple Alerting	The call that is alerting the subject device is also alerting other devices.	Multiple Alerting
Network Signal	The call was delivered to a device that is outside of the switching sub-domain.	External Calls
New Call	The call was not redirected.	Any feature
No Available Agents	The call was delivered to a device because there were no available devices in a group (ACD).	ACD, Forwarding
Normal	The call was delivered to a device (a more specific cause cannot be provided).	Any feature

© ISO/IEC 2007 – All rights reserved
--`,,```,,,,````-`-`,,`,,`,`,,`---
Copyright International Organization for Standardization
Provided by IHS under license with ISO
No reproduction or networking permitted without license from IHS
Not for Resale

Table 17-153 Delivered—Event Causes (continued)

Event Cause	Description	Associated Features
Overflow	The call was delivered to a device after it overflowed a queue, group, or target.	ACD
Override	The call was delivered to a device as a result of an override (e.g., Intrude Call) feature.	Intrude Call
Recall	The call was delivered to a device as part of the recall feature (any type of recall).	Recall
Recall - Busy	The call was delivered to a device as part of the recall feature due to a busy condition at the intended device.	Recall
Recall - No Answer	The call was delivered to a device as part of the recall feature due to a no answer condition at the intended device.	Recall
Recall - Forwarded	The call was delivered to a device as part of the recall feature due to a forwarding condition at the intended destination.	Recall
Recall - Resources Not Available	The call was delivered to a device as part of the recall feature due to unavailble resources at the intended device.	Recall
Redirected	The call was delivered to a device after it was diverted from or deflected to this device.	Deflect Call
Remains in Queue	The call was delivered to a device while the calling device's position in the queue is retained. For example, the call could be delivered to a VRU or other automated answering equipment while the calling device retains its position in the ACD queue.	ACD, Queuing, Single Step Conference, Join Call
Resources not available	The call was delivered because some resources were not available (ACD, forwarding).	ACD, Forwarding
Single Step Transfer	The call alerted the device due to a Single Step Transfer service.	Single Step Transfer
Single Step Conference	The call alerted the device due to a Single Step Conference service.	Single Step Conference
Timeout	The event was generated because a trunk timer expired. It is not generated as the result of a particular network event or condition.	External calls

17.2.5.3 Functional Requirements

1. The Delivered event should not be used to determine when a device is physically ringing. (The Ringer Status event should be used for this.)
2. When a call is delivered to a bridged device configuration, multiple Delivered events are sent (one for each appearance of the device configuration). Each event will contain the following type of information:
   - The event for the appearance which is delivered the call first will have the appropriate event cause on why the call is being delivered to the device configuration. All subsequent events for the other appearances will have an event cause of Key Operation.
   - The connection parameter will be the connection identifier of the specific appearance.
   - The alertingDevice will depend on the type of referencing model that is supported by the switching function (refer to 6.1.5, "Referencing Devices, Elements, Appearances and Device Configurations", on page 54).

© ISO/IEC 2007 – All rights reserved

Copyright International Organization for Standardization
Provided by IHS under license with ISO
No reproduction or networking permitted without license from IHS
Not for Resale

- The calledDevice or associatedCalledDevice will contain the device identifier associated with the logical element of the device.

3. When observing a call or a device in a call, and the call diverts from a device in the call, if the switching function does not provide the Diverted event for all devices in a call or for call-type monitors (as indicated through the capabilities exchange services option), the computing function shall use the alertingDevice, calledDevice, lastRedirectionDevice, and cause parameters to properly track the progress of the call as the result of the redirection. See 6.7.6, “Tracking a Diverted Call”, on page 75 for more information.
4. If there is more than one calling device (i.e. a conference calling back to a device), then the originatingNIDConnection parameter will not be present.
5. For external incoming calls, the contents of the networkCallingDeviceID and the networkCalledDeviceID parameters shall not change as long as the associatedCallingDevice remains in the call. This differs from the callingDeviceID and the calledDeviceID parameters in that these parameters may change as a result of features such as transfer, forwarding, and conferencing, etc.

17.2.6 Digits Dialled

The Digits Dialled event indicates that a call or feature is being attempted from a device and that a portion of the dialling sequence has been completed. It implies that only part of the input activity is complete, and that more of the dialling sequence needs to be supplied before the entire input activity is complete.

After the entire dialling sequence is complete, the Originated event will be generated in the case where a call is being attempted. The last Digits Dialled event received prior to receiving the Originated event will report the last digits dialled to complete the dialling sequence.

Figure 17-38 Digits Dialled Event

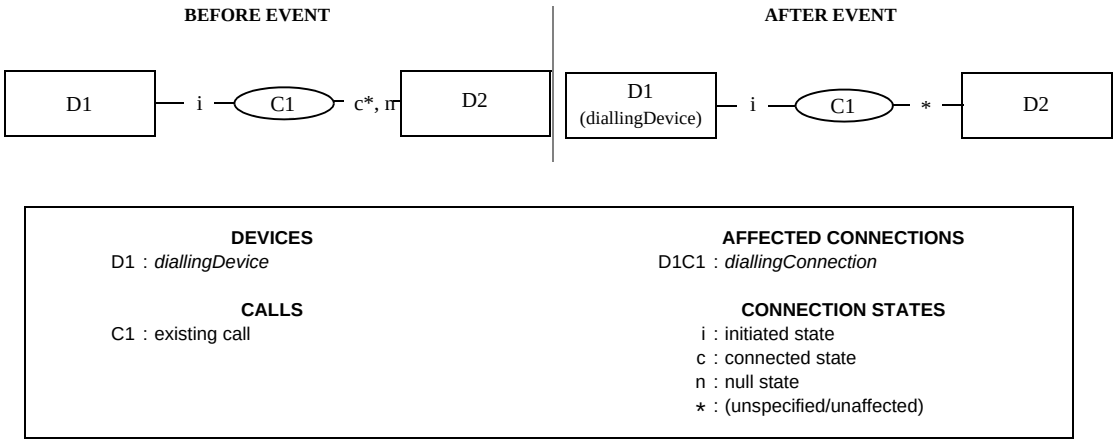

Note that the *connected state when D2 is a NID.

17.2.6.1 Event Parameters

Table 17-154 Digits Dialled—Event Parameters

Parameter Name	Type	M/ O/C	Description
monitorCrossRefID	MonitorCrossRefID	M	Associates the event to an established monitor.
diallingConnection	ConnectionID	M	Specifies the connection at which the digits were dialled.
diallingDevice	SubjectDeviceID	M	Specifies the device at which the digits were dialled.
diallingSequence	DeviceID	M	Specifies the sequence of digits that was dialled.

© ISO/IEC 2007 – All rights reserved
Copyright International Organization for Standardization
Provided by IHS under license with ISO
No reproduction or networking permitted without license from IHS
Not for Resale

Table 17-154 Digits Dialled—Event Parameters (continued)

Parameter Name	Type	M/ O/C	Description
localConnectionInfo	LocalConnectionState	C	Specifies the local connection state of the device associated with the Monitor Cross Reference ID. The following are the states of the devices in the call. • For the device dialling the digits: Initiated. This parameter is mandatory for events generated for device-type monitors and otherwise shall not be provided.
correlatorData	CorrelatorData	C	Specifies the correlator data associated with the call. This parameter is mandatory if there is correlator data associated with the call and shall otherwise not be provided.
cause	EventCause	M	Specifies the reason for the event.
servicesPermitted	ServicesPermitted	C	Specifies a list of the call control services that can be applied to the local connection. This parameter is mandatory if the switching function supports the Dynamic Feature Availability option (as indicated through the capabilities exchange services), otherwise this parameter is optional.
networkCallingDevice	NetworkCallingDeviceID	O	Specifies the original calling device information provided by the network for external incoming calls. This parameter is provided only for external incoming calls.
networkCalledDevice	NetworkCalledDeviceID	O	Specifies the original called device information provided by the network for external incoming calls. This parameter is provided only for external incoming calls.
associatedCallingDevice	AssociatedCallingDeviceID	C	Specifies the Network Interface Device associated with the calling device if the call is an external incoming call. This parameter is mandatory for all external incoming calls and shall not be provided otherwise.
associatedCalledDevice	AssociatedCalledDeviceID	C	For outgoing external calls, this parameter specifies the Network Interface Device associated with the called device. For incoming external calls, this parameter specifies a device within the switching sub-domain associated with the originally called device. This parameter is mandatory for all external outgoing calls and it is optional for external incoming calls.
diallingConnectionInfo	ConnectionInformation	O	Specifies the connection information associated with the diallingConnection connection. If this parameter is not present, then the connection information is switching function specific.
callCharacteristics	CallCharacteristics	O	Specifies the high level characteristics (ACD call, Priority call, etc.) associated with the call. See 12.2.4, “CallCharacteristics”, on page 108 for the complete set of possible values.
callLinkageData	CallLinkageData	C	Specifies the global call data and thread data associated with the call. This parameter is mandatory if the switching if the switching function supports the call linkage feature otherwise it shall not be provided.
languagePreferences	LanguagePreferences	O	Specifies the language preferences associated with the call.
security	CSTASecurityData	O	Specifies timestamp information, message sequence number, and security information.
privateData	CSTAPrivateData	O	Specifies non-standardized information.

© ISO/IEC 2007 – All rights reserved

Copyright International Organization for Standardization
Provided by IHS under license with ISO
No reproduction or networking permitted without license from IHS
Not for Resale

17.2.6.2 Event Causes

Table 17-155 Digits Dialled—Event Causes

Event Cause	Description	Associated Features
Conference	Digits were dialled as part of a consultation for the purpose of a conference.	Consultation Call with consultOptions of ConferenceOnly
Consultation	Digits were dialled as part of a consultation.	Consultation Call
Network Dialling	Digits were dialled after a call has left the switching sub-domain.	External Calls
Normal	Digits were dialled (a more specific event cause cannot be provided).	Any feature, Dial Digits, Make Call
Transfer	Digits were dialled as part of a consultation for the purpose of a transfer.	Consultation Call with consultOptions of TransferOnly

17.2.6.3 Functional Requirements

1. This event will only be generated when the computing function has a device-type or call-type monitoring applied to a device that is initiating a call.
2. The grouping and number of digits reported in each event is switching function dependent.
3. The first Digits Dialled event includes the first digit specified in the Make Call or Consultation Call service which started the dialling sequence. If no digits were specified in the initiating Make Call or Consultation Call service (in the case where a null string was passed in the service request), the diallingSequence parameter in the Digits Dialled event contains a null string.
4. The digit sequence reported by the sequence of Digits Dialled events reflects the digits actually dialled through manual interaction or by CSTA service requests. It will not reflect any filtering or manipulation of the digit sequence by the switching function
5. If a Network Reached event is received prior to the receipt of an originated event, it may not be possible to determine the complete dialling sequence.
6. The switching function may have a timeout period for multi-stage dialling. If the dialling sequence does not complete prior to this timeout, it may either abort the call or attempt to use the digits already dialled and signal that dialling is complete with an originated event.

17.2.7 Diverted

The Diverted event indicates that a call has been diverted from a device and that the call is no longer present at the device.

Common situations that generate this event include:

- A call leaves a device that has some type of forwarding feature activated. Examples are Ring No Answer, Forward Immediate (depends upon the forwarding feature model supported by the switching function. See 6.7.1, “Forwarding”, on page 69), Recall, etc.
- A call leaves an ACD/Split/Hunt group device to be redirected to an agent, an extension, another ACD/Split/Hunt Group device, or to an offsite destination.
- A call leaves an ACD queue and is redirected to either an agent or an extension.
- A divert (Deflect, Pick, etc.) is successfully invoked.

© ISO/IEC 2007 – All rights reserved

Copyright International Organization for Standardization
Provided by IHS under license with ISO
No reproduction or networking permitted without license from IHS
Not for Resale

Figure 17-39 Diverted Event

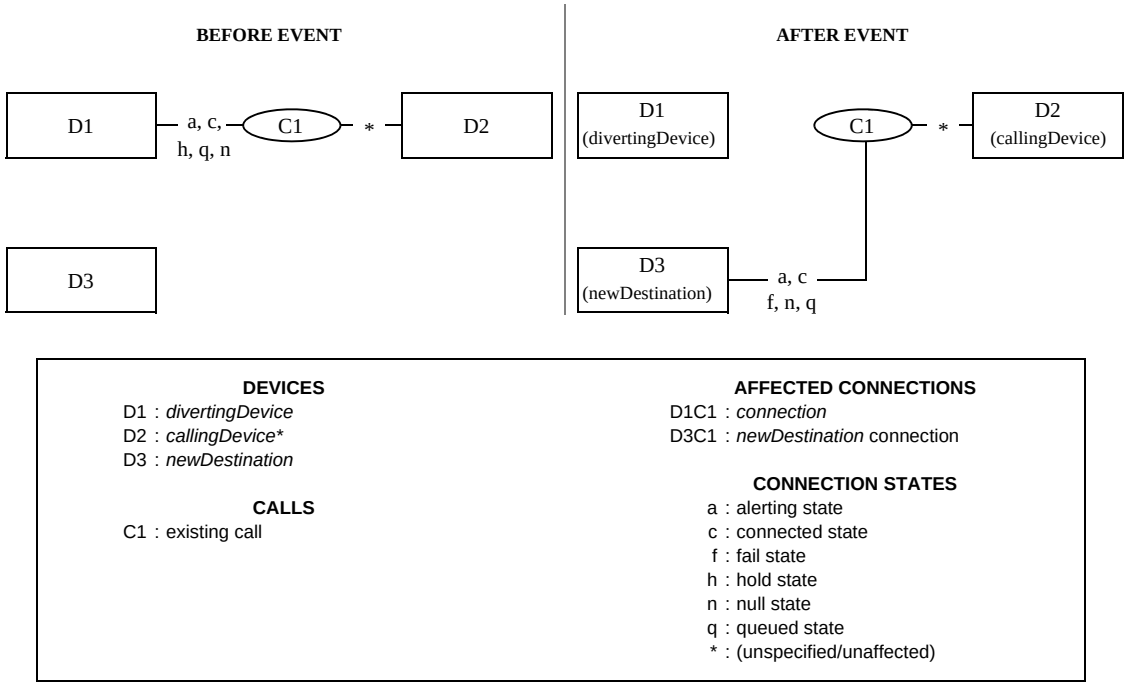

*There are some situations where D1 can also be the Calling Device (e.g. Make Predictive Call).

17.2.7.1 Event Parameters

Table 17-156 Diverted—Event Parameters

Parameter Name	Type	M/ O/C	Description
monitorCrossRefID	MonitorCrossRefID	M	Associates the event to an established monitor.
connection	ConnectionID	M	Specifies the connection that was diverted.
divertingDevice	SubjectDeviceID	M	Specifies the device from which the call was diverted.
newDestination	SubjectDeviceID	M	Specifies the device to which the call was diverted.
callingDevice	CallingDeviceID	C	Specifies a device remaining in the call with the newDestination device. This parameter shall be provided in the case of Immediate Forwarding, where forwarding is triggered after the call is delivered to a device (see Function Requirement #). Otherwise the parameter is optional.
calledDevice	CalledDeviceID	C	Specifies the originally called device. This parameter shall be provided in the case of Immediate Forwarding, where forwarding is triggered after the call is delivered to a device (see Function Requirement #). Otherwise the parameter is optional.
lastRedirectionDevice	RedirectionDeviceID	M	Specifies the previously known redirected from device. Note that this is not the divertingDevice that caused this event, but the device that performed a redirection towards the current divertingDevice just before the current redirection.

© ISO/IEC 2007 – All rights reserved

Copyright International Organization for Standardization
Provided by IHS under license with ISO
No reproduction or networking permitted without license from IHS
Not for Resale

Table 17-156 Diverted—Event Parameters (continued)

Parameter Name	Type	M/ O/C	Description
localConnectionInfo	LocalConnectionState	C	Specifies the local connection state of the device associated with the Monitor Cross Reference ID. The following are the states of the devices in the call. • For the diverting device: Null • For the other devices left in the call: (unaffected) This parameter is mandatory for events generated for device-type monitors and otherwise shall not be provided.
correlatorData	CorrelatorData	C	Specifies the correlator data associated with the call. This parameter is mandatory if there is correlator data associated with the call and shall otherwise not be provided.
userData	UserData	C	Specifies user information that is related to the call. This parameter is mandatory if user data is sent and the parameter is supported, otherwise it shall not be included.
cause	EventCause	M	Specifies the reason for the event.
servicesPermitted	ServicesPermitted	C	Specifies a list of the call control services that can be applied to the local connection. This parameter is mandatory if the switching function supports the Dynamic Feature Availability option (as indicated through the capabilities exchange services), otherwise this parameter is optional.
mediaCallCharacteristics	MediaCallCharacteristics	O	Specifies the media class and media characteristics of the call. See 12.2.18, “MediaCallCharacteristics”, on page 130 for the complete description.
callCharacteristics	CallCharacteristics	O	Specifies the high level characteristics (ACD call, Priority call, etc.) associated with the call. See 12.2.4, “CallCharacteristics”, on page 108 for the complete set of possible values.
connectionInfo	ConnectionInformation	O	Specifies the connection information associated with the connection. If this parameter is not present, then the connection information is switching function specific.
networkCallingDevice	NetworkCallingDeviceID	O	Specifies the original calling device information provided by the network for external incoming calls. This parameter is provided only for external incoming calls.
networkCalledDevice	NetworkCalledDeviceID	O	Specifies the original called device information provided by the network for external incoming calls. This parameter is provided only for external incoming calls.
associatedCallingDevice	AssociatedCallingDeviceID	C	Specifies the Network Interface Device associated with the calling device if the call is an external incoming call. This parameter is mandatory for all external incoming calls and shall not be provided otherwise.
associatedCalledDevice	AssociatedCalledDeviceID	C	For outgoing external calls, this parameter specifies the Network Interface Device associated with the called device. For incoming external calls, this parameter specifies a device within the switching sub-domain associated with the originally called device. This parameter is mandatory for all external outgoing calls and it is optional for external incoming calls.

© ISO/IEC 2007 – All rights reserved

Copyright International Organization for Standardization
Provided by IHS under license with ISO
No reproduction or networking permitted without license from IHS
Not for Resale

Table 17-156 Diverted—Event Parameters (continued)

Parameter Name	Type	M/ O/C	Description
callLinkageData	CallLinkageData	C	Specifies the global call data and thread data associated with the call. This parameter is mandatory if the switching function supports the call linkage feature otherwise it shall not be provided.
subjectOfCall	SubjectOfCall	O	Specifies the subject/intent of the call. This could represent the subject header of an Email (text call) or intent for a voice call, for example.
messageInfo	MessageInfo	O	Specifies the contents of message information associated with a call. The message information consists of one of more items.
languagePreferences	LanguagePreferences	O	Specifies the language preferences associated with the call.
deviceHistory	DeviceHistory	O	Specifies the list of devices which were previously associated with the call (e.g. redirecting, transferring, clearing devices).
security	CSTASecurityData	O	Specifies timestamp information, message sequence number, and security information.
privateData	CSTAPrivateData	O	Non-standardized information attached to the event.

17.2.7.2 Event Causes

Table 17-157 Diverted—Event Causes

Event Cause	Description	Associated Features
ACD Forward	The call was diverted from one ACD device to a new ACD device and is no longer queued at the previous ACD device.	ACD
Busy Overflow	The call was diverted because all possible destinations for the call are busy or unavailable and there is no queueing mechanism (ACD, for example) available.	Call Forwarding
Calendar Overflow	The call was diverted because all possible calendar based destinations for the call are unavailable due to the time of the day or the day of the week.	Call Forwarding
Call Forward	The call was diverted from a device after it was forwarded from another device (any type of forwarding).	Call Forwarding
Call Forward—Busy	The call was diverted from a device after it was forwarded (forwarding on a busy condition).	Call Forwarding
Call Forward—Immediate	The call was diverted from a device after it was forwarded (forwarding on all conditions).	Call Forwarding
Call Forward—No Answer	The call was diverted from a device after it was forwarded because of a no answer condition.	Call Forwarding
Call Not Answered	The call was diverted from a device because it was not answered before a timer elapsed.	Recall
Call Pickup	The call was diverted from a device because of the pickup feature.	Directed Pickup Call, Group Pickup Call

© ISO/IEC 2007 – All rights reserved

Copyright International Organization for Standardization
Provided by IHS under license with ISO
No reproduction or networking permitted without license from IHS
Not for Resale

Table 17-157 Diverted—Event Causes (continued)

Event Cause	Description	Associated Features
Capacity Overflow	The call was diverted because all possible destinations are busy or unavailable and the call cannot be queued because the system is already at capacity.	Call Forwarding
Distributed	The call was diverted from a device because it was distributed by a distribution group (ACD or Hunt group).	ACD
Do Not Disturb	The call was diverted from a device because the device had the Do Not Disturb feature set.	Call Forwarding
No Available Agents	The call was diverted from a device because there were no available devices in a group (ACD).	ACD
Normal	The call was diverted from a device (a more specific cause cannot be provided).	Any feature
Overflow	The call was diverted from a device after it overflowed a queue, group, or target.	ACD
Park	The park feature has been invoked to either park or un-park a call at a device.	Park Call
Path Replacement	The call was diverted due to optimization of network (NID) resources.	Network feature
Queue Time Overflow	The call was diverted because all possible destinations for the call are busy or unavailable and the estimated holding time before the call can be answered is too long.	Call Forwarding
Recall	The call was diverted from a device as part of a recall feature (any type of recall).	Recall
Recall - Busy	The call was diverted from a device as part of the recall feature due to a busy condition at the intended device.	Recall
Recall - No Answer	The call was diverted from a device as part of the recall feature due to a no answer condition at the intended device.	Recall
Recall - Forwarded	The call was diverted from a device as part of the recall feature due to a forwarding condition at the intended destination.	Recall
Recall - Resources Not Available	The call was diverted from a device as part of the recall feature due to unavailble resources at the intended device.	Recall
Redirected	The call was diverted from a device because of a deflect or divert feature.	Deflect Call
Resources Not Available	The call was diverted from a device because there were no resources available to process it.	ACD
Unknown Overflow	The call was diverted because an overflow condition exists but the specific overflow reason is not known.	Call Forwarding

17.2.7.3 Functional Requirements

1. Based upon the switching function (as indicated through the capabilities exchange services), the switching function may send the Diverted event to either:
   - Only the divertingDevice (D1) for device-type monitors, and not for call-type monitors, or
   - To all devices in a call (device-type monitors) and for call-type monitors.

--`,,```,,,,````-`-`,,`,,`,`,,`---
© ISO/IEC 2007 – All rights reserved
Copyright International Organization for Standardization
Provided by IHS under license with ISO
No reproduction or networking permitted without license from IHS
Not for Resale

2. When observing a call or a device in a call, and the call previously diverts from a device in the call, if the switching function does not provide the Diverted event for all devices in a call or for call-type monitors (as indicated through the capabilities exchange services option), the computing function shall use the divertingDevice, calledDevice, lastRedirectionDevice, and cause parameters to properly track the progress of the call as a result of the previous redirection. See 6.7.6, “Tracking a Diverted Call”, on page 75 for more information.
3. In the case of Immediate Forwarding, where forwarding is triggered *after* the call is delivered to a device (as indicated by the capability exchange services), the Diverted event for the Diverting device shall contain a cause of Immediate Forwarding and a localConnectionInfo of Null. When this Diverted event is the first and last event generated for the call at the Diverting device, it is an example of a Null to Null connection state transition.
4. For external incoming calls, the contents of the networkCallingDeviceID and the networkCalledDeviceID parameters shall not change as long as the associatedCallingDevice remains in the call. This differs from the callingDeviceID and the calledDeviceID parameters in that these parameters may change as a result of features such as transfer, forwarding, and conferencing, etc.

17.2.8 Established

The Established event indicates that a call has been answered at a device or that a call has been connected to a device.

Common situations that generate this event include:

- A call has been answered at a device (e.g., a user has manually gone off-hook).
- The Answer Call service has been successfully invoked.
- A call has been picked by another device.

Figure 17-40 Established Event

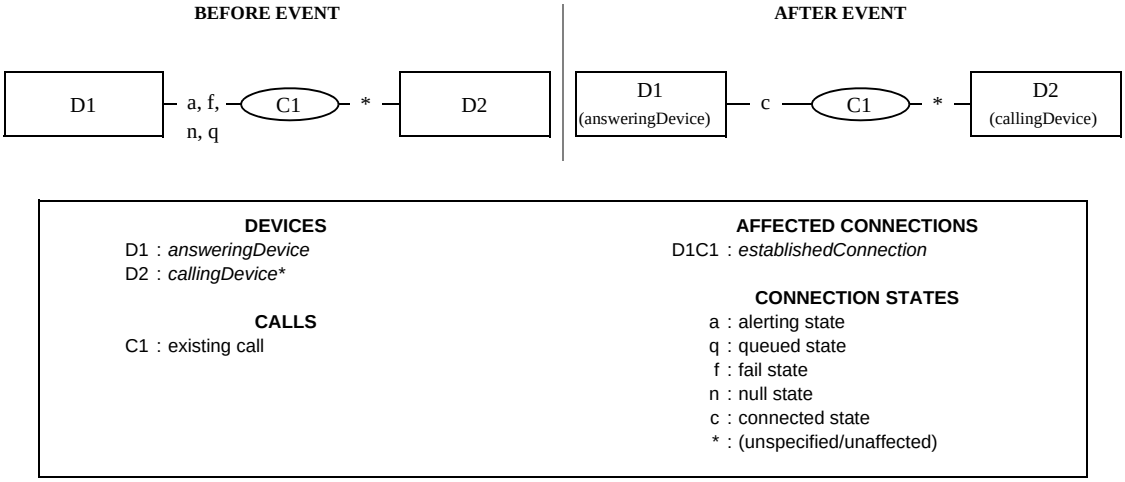

*There may be some situations where D1 can be the calling device (e.g. Make Predictive Call).

© ISO/IEC 2007 – All rights reserved

Copyright International Organization for Standardization
Provided by IHS under license with ISO
No reproduction or networking permitted without license from IHS
Not for Resale

17.2.8.1 Event Parameters

Table 17-158 Established—Event Parameters

Parameter Name	Type	M/ O/C	Description
monitorCrossRefID	MonitorCrossRefID	M	Associates the event to an established monitor.
establishedConnection	ConnectionID	M	Specifies the connection that was connected.
answeringDevice	SubjectDeviceID	M	Specifies the device that connected into the call.
callingDevice	CallingDeviceID	M	Specifies the calling device.
calledDevice	CalledDeviceID	M	Specifies the originally called device.
lastRedirectionDevice	RedirectionDeviceID	M	Specifies the previously known redirected from device.
originatingNIDConnection	ConnectionID	O	Specifies the connection of the Network Interface Device (NID) that the call originated from. If this parameter is supported, it shall be provided if there is an originating NID associated with the call, otherwise it shall not be provided. See Functional Requirement #4.
localConnectionInfo	LocalConnectionState	C	Specifies the local connection state of the device associated with the Monitor Cross Reference ID. The following are the states of the devices in the call. • For the answering device: Connected • For the calling device: (unaffected - never Null) This parameter is mandatory for events generated for device-type monitors and otherwise shall not be provided.
correlatorData	CorrelatorData	C	Specifies the correlator data associated with the call. This parameter is mandatory if there is correlator data associated with the call and shall otherwise not be provided.
userData	UserData	C	Specifies user information that is related to the call. This parameter is mandatory if user data is sent and the parameter is supported, otherwise it shall not be included.
cause	EventCause	M	Specifies the reason for the event.
servicesPermitted	ServicesPermitted	C	Specifies a list of the call control services that can be applied to the local connection. This parameter is mandatory if the switching function supports the Dynamic Feature Availability option (as indicated through the capabilities exchange services), otherwise this parameter is optional.
networkCallingDevice	NetworkCallingDeviceID	O	Specifies the original calling device information provided by the network for external incoming calls. This parameter is provided only for external incoming calls.
networkCalledDevice	NetworkCalledDeviceID	O	Specifies the original called device information provided by the network for external incoming calls. This parameter is provided only for external incoming calls.
associatedCallingDevice	AssociatedCallingDeviceID	C	Specifies the Network Interface Device associated with the calling device if the call is an external incoming call. This parameter is mandatory for all external incoming calls and shall not be provided otherwise.

© ISO/IEC 2007 – All rights reserved
Copyright International Organization for Standardization
Provided by IHS under license with ISO
No reproduction or networking permitted without license from IHS
Not for Resale

Table 17-158 Established—Event Parameters (continued)

Parameter Name	Type	M/ O/C	Description
associatedCalledDevice	AssociatedCalledDeviceID	C	For outgoing external calls, this parameter specifies the Network Interface Device associated with the called device. For incoming external calls, this parameter specifies a device within the switching sub-domain associated with the originally called device. This parameter is mandatory for all external outgoing calls and it is optional for external incoming calls.
mediaCallCharacteristics	MediaCallCharacteristics	O	Specifies the media class and media characteristics of the call. See 12.2.18, “MediaCallCharacteristics”, on page 130 for the complete description.
callCharacteristics	CallCharacteristics	O	Specifies the high level characteristics (ACD call, Priority call, etc.) associated with the call. See 12.2.4, “CallCharacteristics”, on page 108 for the complete set of possible values.
establishedConnectionInfo	ConnectionInformation	O	Specifies the connection information associated with the establishedConnection connection. If this parameter is not present, then the connection information is switching function specific.
callLinkageData	CallLinkageData	C	Specifies the global call data and thread data associated with the call. This parameter is mandatory if the switching function supports the call linkage feature otherwise it shall not be provided.
subjectOfCall	SubjectOfCall	O	Specifies the subject/intent of the call. This could represent the subject header of an Email (text call) or intent of a voice call, for example.
messageInfo	MessageInfo	O	Specifies the contents of message information associated with a call. The message information consists of one of more items.
languagePreferences	LanguagePreferences	O	Specifies the language preferences associated with the call.
deviceHistory	DeviceHistory	O	Specifies the list of devices which were previously associated with the call (e.g. redirecting, transferring, clearing devices).
security	CSTASecurityData	O	Specifies timestamp information, message sequence number, and security information.
privateData	CSTAPrivateData	O	Non-standardized information attached to the event.

17.2.8.2 Event Causes

Table 17-159 Established—Event Causes

Event Cause	Description	Associated Features
ACD Forward	The call was established at a device (immediately, before being delivered) and is no longer queued at the previous ACD device.	ACD
Alternate	The call was reestablished or answered at a device due to the alternate feature.	Alternate Call
Call Back	The call was established at a device (immediately, before being delivered) because of a previously set call back feature.	Call Back Call-Related

© ISO/IEC 2007 – All rights reserved

Copyright International Organization for Standardization
Provided by IHS under license with ISO
No reproduction or networking permitted without license from IHS
Not for Resale

Table 17-159 Established—Event Causes (continued)

Event Cause	Description	Associated Features
Call Forward	The call was established at a device (immediately, before being delivered) after it was forwarded (any type of forwarding).	Call Forwarding
Call Forward—Busy	The call was established at a device (immediately, before being delivered) after it was forwarded because of a busy condition.	Call Forwarding
Call Forward—Immediate	The call was established at a device (immediately, before being delivered) after it was forwarded (forwarding on all conditions).	Call Forwarding
Call Forward—No Answer	The call was established at a device (immediately, before being delivered) after it was forwarded because of a no answer condition.	Call Forwarding
Call Pickup	The call was established at a device via a pickup feature.	Directed Pickup Call, Group Pickup Call
Conference	The call that was established at a device involves a conference resource or is intended to be part of a conference.	Any conference feature
Distributed	The call was distributed, (and was established immediately, before being delivered) to a device because the call has moved from the distribution mechanism (ACD, Hunt) to an available device associated with the distribution mechanism	ACD, Routeing Services
Intrude	The call was established at a device because the Intrude Call service was executed successfully.	Intrude Call
Key Operation	The call was established at a device that has an appearance in a call appearance, bridged, or hybrid device configuration.	Multiple Appearance
Network Signal	The call was established at a device that is outside of the switching sub-domain.	External Calls
New Call	The call was not redirected.	Any Feature
No Available Agents	The call was established immediately, before being delivered, at a device because there were no available devices in a group (ACD)	ACD, Forwarding
Normal	The call was established at a device (a more specific cause cannot be provided).	Any feature
Overflow	The call was established at a device (immediately, before being delivered) after it overflowed a queue, group, or target.	ACD
Override	The call was established at a device as a result of an override (e.g., Single Step Conference Call, Intrude Call) feature.	Intrude Call
Recall	The call was established at a device as part of the recall feature (e.g., any type of recall) the call was established immediately (e.g. auto answer), before being delivered.	Recall
Recall - Busy	The call was established at a device as part of the recall feature due to a busy condition at the intended device. The call was established immediately (e.g. auto answer), before being delivered.	Recall

© ISO/IEC 2007 – All rights reserved

Copyright International Organization for Standardization
Provided by IHS under license with ISO
No reproduction or networking permitted without license from IHS
Not for Resale

Table 17-159 Established—Event Causes (continued)

Event Cause	Description	Associated Features
Recall - No Answer	The call was established at a device as part of the recall feature due to a no answer condition at the intended device. The call was established immediately (e.g. auto answer), before being delivered.	Recall
Recall - Forwarded	The call was established at a device as part of the recall feature due to a forwarding condition at the intended destination. The call was established immediately (e.g. auto answer), before being delivered.	Recall
Recall - Resources Not Available	The call was established at a device as part of the recall feature due to unavailble resources at the intended device. The call was established immediately (e.g. auto answer), before being delivered.	Recall
Redirected	The call was established at a device after it was previously diverted from or deflected to this device the call was established immediately, before being delivered.	Deflect Call
Remains in Queue	The call was established at a device and the calling device's position in the ACD queue is retained and the call will be routed to an agent when one becomes available. For example, the call could be established at a VRU or other automated answering equipment while the calling device retains its position in the ACD queue.	ACD
Resources Not Available	The call was established at a device (immediately, before being delivered) because some resources were not available (ACD, forwarding).	ACD, Forwarding
Single Step Conference	The call was established at a device (immediately, before being delivered) due to the Single Step Conference feature.	Single Step Conference
Single Step Transfer	The call was established at a device (immediately, before being delivered) due to the Single Step Transfer feature.	Single Step Transfer
Timeout	The event was generated because a trunk timer expired. It is not generated as the result of a network event or condition.	External Call

17.2.8.3 Functional Requirements

1. A computing function will not see an Established event after a Service Initiated event (e.g. because of Make Call with prompting) indicating that the calling device is connected in the call. Instead, the computing function will see an Originated event indicating connection into the call.
2. When an appearance from a bridged device configuration connects into a call, an Established event is sent. The event will contain the following type of information:
   - The event cause will be Normal.
   - The establishedConnection will be the connection identifier of the specific appearance.
   - The answeringDevice will depend on the type of referencing model that is supported by the switching function (refer to 6.1.5, "Referencing Devices, Elements, Appearances and Device Configurations", on page 54).

© ISO/IEC 2007 – All rights reserved

Copyright International Organization for Standardization
Provided by IHS under license with ISO
No reproduction or networking permitted without license from IHS
Not for Resale

- The calledDevice or associatedCalledDevice will contain the device identifier associated with the logical element of the device.

3. When observing a call or a device in a call, and the call diverts from a device in the call, if the switching function does not provide the Diverted event for all devices in a call or for call-type monitors (as indicated through the capabilities exchange services option), the computing function shall use the answeringDevice, calledDevice, lastRedirectionDevice, and cause (eventCause parameter type) parameters to properly track the progress of the call as a result of the redirection. See 6.7.6, “Tracking a Diverted Call”, on page 75 for more information.
4. If there is more than one calling device (i.e. a conference calling back to a device), then the originatingNIDConnection parameter will not be present.
5. For external incoming calls, the contents of the networkCallingDeviceID and the networkCalledDeviceID parameters shall not change as long as the associatedCallingDevice remains in the call. This differs from the callingDeviceID and the calledDeviceID parameters in that these parameters may change as a result of features such as transfer, forwarding, and conferencing, etc.

17.2.9 Failed

The Failed event indicates that a call cannot be completed or a connection has entered the Fail state for any of the reasons described in the Event Causes table on page 334.

Figure 17-41 Failed Event

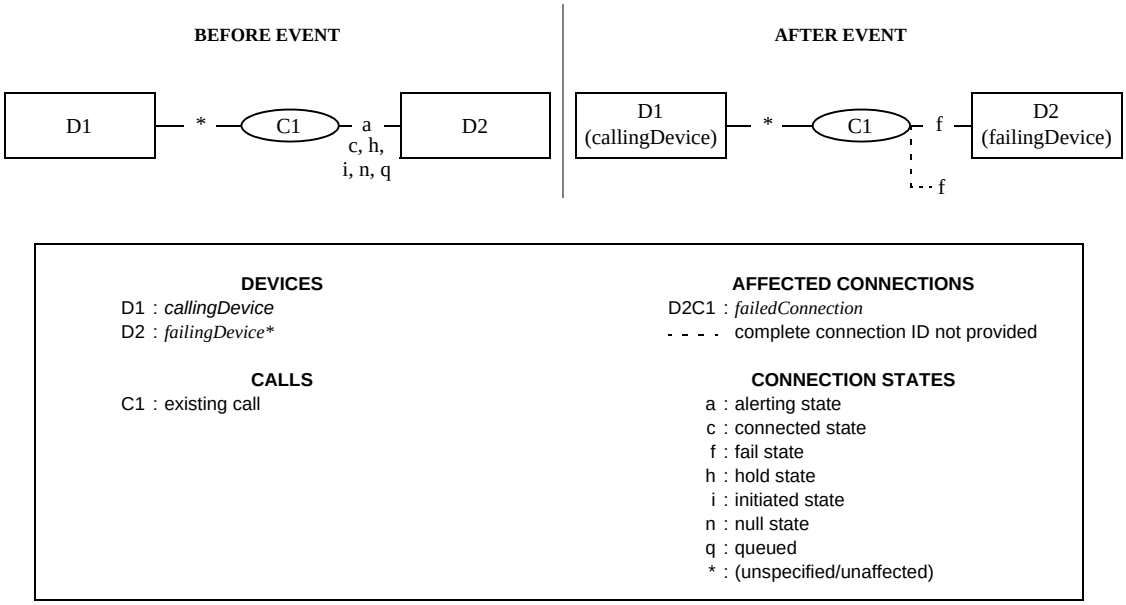

Refer to 6.7.2, “Connection Failure”, on page 71 for a complete description of partial connection IDs.

In some situations D2 can be the calling device.

17.2.9.1 Event Parameters

Table 17-160 Failed—Event Parameters

Parameter Name	Type	M/ O/C	Description
monitorCrossRefID	MonitorCrossRefID	M	Associates the event to an established monitor.

© ISO/IEC 2007 – All rights reserved
Copyright International Organization for Standardization
Provided by IHS under license with ISO
No reproduction or networking permitted without license from IHS
Not for Resale

Table 17-160 Failed—Event Parameters (continued)

Parameter Name	Type	M/ O/C	Description
failedConnection	ConnectionID	M	Specifies the connection that failed. (See Functional Requirement #3 at the end of this section.)
failingDevice	SubjectDeviceID	M	Specifies the device that failed.
callingDevice	CallingDeviceID	M	Specifies the calling device.
calledDevice	CalledDeviceID	M	Specifies the originally called device.
lastRedirectionDevice	RedirectionDeviceID	M	Specifies the previously known redirected-from device.
originatingNIDConnection	ConnectionID	O	Specifies the connection of the Network Interface Device (NID) that the call originated from. If this parameter is supported, it shall be provided if there is an originating NID associated with the call, otherwise it shall not be provided.
localConnectionInfo	LocalConnectionState	C	Specifies the local connection state of the device associated with the Monitor Cross Reference ID. The following are the states of the devices in the call. • For the failing device: Fail • For the other devices left in the call: (unaffected) This parameter is mandatory for events generated for device-type monitors and otherwise shall not be provided.
correlatorData	CorrelatorData	C	Specifies the correlator data associated with the call. This parameter is mandatory if there is correlator data associated with the call and shall otherwise not be provided.
userData	UserData	C	Specifies user information that is related to the call. This parameter is mandatory if user data is sent and the parameter is supported, otherwise it shall not be included.
cause	EventCause	M	Specifies the reason for the event.
servicesPermitted	ServicesPermitted	C	Specifies a list of the call control services that can be applied to the local connection. This parameter is mandatory if the switching function supports the Dynamic Feature Availability option (as indicated through the capabilities exchange services), otherwise this parameter is optional.
networkCallingDevice	NetworkCallingDeviceID	O	Specifies the original calling device information provided by the network for external incoming calls. This parameter is provided only for external incoming calls.
networkCalledDevice	NetworkCalledDeviceID	O	Specifies the original called device information provided by the network for external incoming calls. This parameter is provided only for external incoming calls.
associatedCallingDevice	AssociatedCallingDeviceID	C	Specifies the Network Interface Device associated with the otherDevice if the call is an external incoming call. This parameter is mandatory for all external incoming calls and shall not be provided otherwise.
associatedCalledDevice	AssociatedCalledDeviceID	C	For outgoing external calls, this parameter specifies the Network Interface Device associated with the called device. For incoming external calls, this parameter specifies a device within the switching sub-domain associated with the originally called device. This parameter is mandatory for all external outgoing calls and it is optional for external incoming calls.

--`,,```,,,,````-`-`,,`,,`,`,,`---
© ISO/IEC 2007 – All rights reserved

Copyright International Organization for Standardization
Provided by IHS under license with ISO
No reproduction or networking permitted without license from IHS
Not for Resale

Table 17-160 Failed—Event Parameters (continued)

Parameter Name	Type	M/ O/C	Description
mediaCallCharacteristics	MediaCallCharacteristics	O	Specifies the media class and media characteristics of the call. See 12.2.18, “MediaCallCharacteristics”, on page 130 for the complete description.
callCharacteristics	CallCharacteristics	O	Specifies the high level characteristics (ACD call, Priority call, etc.) associated with the call. See 12.2.4, “CallCharacteristics”, on page 108 for the complete set of possible values.
failedConnectionInfo	ConnectionInformation	O	Specifies the connection information associated with the failedConnection connection. If this parameter is not present, then the connection information is switching function specific.
callLinkageData	CallLinkageData	C	Specifies the global call data and thread data associated with the call. This parameter is mandatory if the switching function supports the call linkage feature otherwise it shall not be provided.
subjectOfCall	SubjectOfCall	O	Specifies the subject/intent of the call. This could represent the subject header of an Email (text call) or intent for a voice call, for example.
messageInfo	MessageInfo	O	Specifies the contents of message information associated with a call. The message information consists of one of more items.
languagePreferences	LanguagePreferences	O	Specifies the language preferences associated with the call.
deviceHistory	DeviceHistory	O	Specifies the list of devices which were previously associated with the call (e.g. redirecting, transferring, clearing devices).
security	CSTASecurityData	O	Specifies timestamp information, message sequence number, and security information.
privateData	CSTAPrivateData	O	Specifies non-standardized information.

17.2.9.2 Event Causes

Table 17-161 Failed—Event Causes

Event Cause	Description	Associated Features
Blocked	The call failed after a device has disconnected from a call leaving one other device remaining in the call.	Connection Failure
Busy	The call failed after it encountered a busy or unavailable device.	Connection Failure
Busy Overflow	The call failed because all possible destinations for the call are busy or unavailable and there is no queueing mechanism (ACD, for example) available.	Connection Failure
Calendar Overflow	The call failed because all possible calendar based destinations for the call are unavailable due to the time of the day or the day of the week.	Connection Failure
Call Cancelled	The call failed before the associated device has gone on-hook.	Connection Failure
Call Not Answered	The call failed because it was not answered before a timer expired.	Connection Failure

--`,,```,,,,````-`-`,,`,,`,`,,`---
© ISO/IEC 2007 – All rights reserved
Copyright International Organization for Standardization
Provided by IHS under license with ISO
No reproduction or networking permitted without license from IHS
Not for Resale

Table 17-161 Failed—Event Causes (continued)

Event Cause	Description	Associated Features
Capacity Overflow	The call failed because all possible destinations are busy or unavailable and the call cannot be queued because the system is already at capacity.	Connection Failure
Destination Not Obtainable	The call failed because it could not reach the destination.	Connection Failure
Destination Out of Order	The call failed because it encountered a destination out of service.	Connection Failure
Do Not Disturb	The call failed because it encountered a device that has the do not disturb feature set.	Do Not Disturb, Call Forwarding
Incompatible Destination	The call failed because it encountered an incompatible destination.	Connection Failure
Invalid Account Code	The call failed because of an invalid account code.	Connection Failure
Invalid Number Format	The call failed because the dialled number is incorrect.	Connection Failure
Key Operation in Use	The call failed because an appearance is associated with an exclusive bridged device configuration and that the appearance is disabled until the call is terminated or until the call moves away from the device.	Multiple Appearance
Lockout	The call failed because it encountered an inter-digit time-out while dialling.	Connection Failure
Maintenance	The call failed because it encountered a facility or endpoint in a maintenance condition.	Connection Failure
Network Congestion	The call failed because it encountered a congested network. In some circumstances, this event cause indicates that the user is listening to a special signal tone from a network. The tone may be accompanied by a voiced statement similar to “All circuits are busy...”	Connection Failure
Network Not Obtainable	The call failed because it could not reach a destination network.	Connection Failure
Network Out of Order	The call failed because it encountered a network that is out of order.	Connection Failure
Network Signal	The call failed because it encountered a problem after it left the switching sub-domain.	External Calls
Normal	Normal cause for event.	Any feature
Not Available Bearer Service	The call failed because it was requested with a bearer capability that is currently not available.	Connection Failure
Not Supported Bearer Service	The call failed because it was requested with a bearer capability that is currently not supported.	Connection Failure
Number Changed	The call failed because the called number has been changed to a new number and the call cannot be completed.	Connection Failure
Number Unallocated	The call failed because the called number is not allocated to a subscriber.	Connection Failure
Queue Time Overflow	The call failed because all possible destinations for the call are busy or unavailable and the estimated holding time before the call can be answered is too long.	Connection Failure

© ISO/IEC 2007 – All rights reserved

Copyright International Organization for Standardization
Provided by IHS under license with ISO
No reproduction or networking permitted without license from IHS
Not for Resale

Table 17-161 Failed—Event Causes (continued)

Event Cause	Description	Associated Features
Reorder Tone	The call failed because it encountered a reorder condition. When this occurs, the network usually provides Reorder Tone to indicate that a request (call, feature, or supplementary service) was not recognizable. This condition typically results when a user dials a number that is not valid or attempts to obtain a service that is not enabled for that user or device.	Connection Failure
Resources Not Available	The call failed because resources were not available.	Connection Failure
Selected Trunk Busy	The call failed because a specific selected Network Interface Device (e.g., trunk, CO line) is busy.	Connection Failure
Trunks Busy	The call failed because there is no available Network Interface Device (e.g., trunk, CO line).	Connection Failure
Unauthorized Bearer Service	The call failed because it was requested with an unauthorized bearer capability.	Connection Failure
Unknown Overflow	The call was failed because an overflow condition exists but the specific overflow reason is not known.	Connection Failure

17.2.9.3 Functional Requirements

1. With an exclusive bridged device configuration, a Failed event is generated for each appearance that does not enter the call. Each event will contain the following type of information:
   - The event cause will be Key Operation In Use.
   - The failedConnection will be the connection identifier of the specific appearance.
   - The failingDevice will depend on the type of referencing model that is supported by the switching function (refer to 6.1.5, “Referencing Devices, Elements, Appearances and Device Configurations”, on page 54).
   - The calledDevice or associatedCalledDevice will contain the device identifier associated with the logical element of the device.
2. When observing a call or a device in a call, and the call diverts from a device in the call, if the switching function does not provide the Diverted event for all devices in a call or for call-type monitors (as indicated through the capabilities exchange services option), the computing function shall use the failingDevice, calledDevice, lastRedirectionDevice, and cause (EventCause parameter type) parameters to properly track the progress of the call as a result of the redirection. See 6.7.6, “Tracking a Diverted Call”, on page 75 for more information.
3. The content of the failedConnection parameter, depending on whether or not the Failed event is reported to the failing device’s monitor, will contain one of the following types of connection identifiers (use the capabilities exchange services to determine which approach is supported by a particular switching function):
   a. A complete connection identifier (i.e., an identifier that contains both a device identifier and call identifier). This indicates that a connection is made with the failing device, and that the Failed event will be reported to all active device-type monitors associated with the call, as well as all call-type monitors associated with the call.

© ISO/IEC 2007 – All rights reserved
Copyright International Organization for Standardization
Provided by IHS under license with ISO
No reproduction or networking permitted without license from IHS
Not for Resale

b. A call identifier only connection identifier (i.e., an identifier that contains a valid call identifier and no device identifier). This indicates that a connection is not made with the failing device, and that the Failed event will only be reported to the active device and call-type monitors associated with the devices that were in the call prior to the failure (i.e., if a device-type monitor was on the failing device, then the Failed event is not reported).

c. A complete connection identifier (i.e., an identifier that contains both a device identifier and call identifier), not being reported for monitors on the failing device. This indicates that the Failed event will only be reported to the active device and call-type monitors associated with the devices that were in the call prior to the failure (i.e., if a device-type monitor was on the failing device, then the Failed event is not reported).

4. For external incoming calls, the contents of the networkCallingDeviceID and the networkCalledDeviceID parameters shall not change as long as the associatedCallingDevice remains in the call. This differs from the callingDeviceID and the calledDeviceID parameters in that these parameters may change as a result of features such as transfer, forwarding, and conferencing, etc.

17.2.10 Held

The Held event indicates that a call has been placed on hold.

Common situations that generate this event include:

- Consultation situations (manual and service initiated).
- Hold situations (manual and service initiated).

Figure 17-42 Held Event

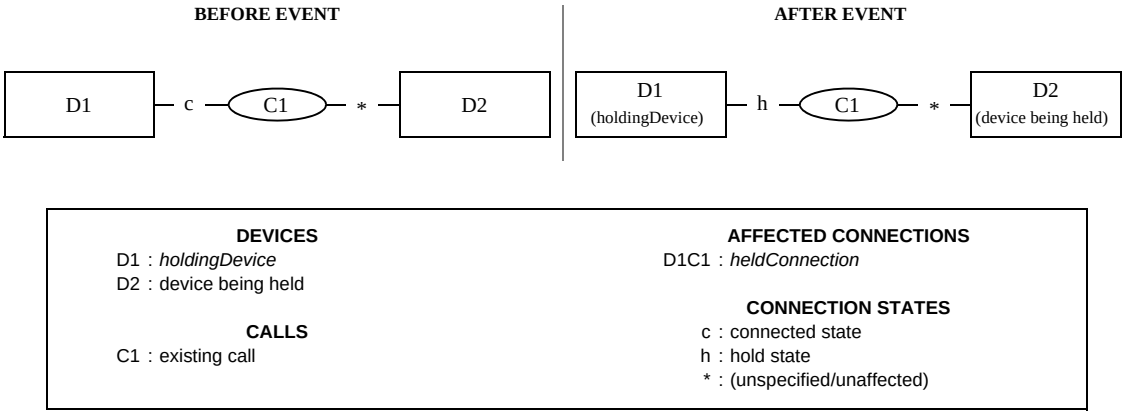

17.2.10.1 Event Parameters

Table 17-162 Held—Event Parameters

Parameter Name	Type	M/ O/C	Description
monitorCrossRefID	MonitorCrossRefID	M	Associates the event to an established monitor.
heldConnection	ConnectionID	M	Specifies the connection at which the hold was activated.
holdingDevice	SubjectDeviceID	M	Specifies the device at which hold was activated.

© ISO/IEC 2007 – All rights reserved

Copyright International Organization for Standardization
Provided by IHS under license with ISO
No reproduction or networking permitted without license from IHS
Not for Resale

Table 17-162 Held—Event Parameters (continued)

Parameter Name	Type	M/ O/C	Description
localConnectionInfo	LocalConnectionState	C	Specifies the local connection state of the device associated with the Monitor Cross Reference ID. The following are the states of the devices in the call. • For the holding device: Hold • For the other devices left in the call: (unaffected) This parameter is mandatory for events generated for device-type monitors.
correlatorData	CorrelatorData	O	Specifies the correlator data associated with the call.
cause	EventCause	M	Specifies the reason for the event.
servicesPermitted	ServicesPermitted	C	Specifies a list of the call control services that can be applied to the local connection. This parameter is mandatory if the switching function supports the Dynamic Feature Availability option (as indicated through the capabilities exchange services), otherwise this parameter is optional.
mediaCallCharacteristics	MediaCallCharacteristics	O	Specifies the media class and media characteristics of the call. See 12.2.18, “MediaCallCharacteristics”, on page 130 for the complete description.
callCharacteristics	CallCharacteristics	O	Specifies the high level characteristics (ACD call, Priority call, etc.) associated with the call. See 12.2.4, “CallCharacteristics”, on page 108 for the complete set of possible values.
heldConnectionInfo	ConnectionInformation	O	Specifies the connection information associated with the heldConnection connection. If this parameter is not present, then the connection information is switching function specific.
callLinkageData	CallLinkageData	O	Specifies the global call data and thread data associated with the call.
languagePreferences	LanguagePreferences	O	Specifies the language preferences associated with the call.
security	CSTASecurityData	O	Specifies timestamp information, message sequence number, and security information.
privateData	CSTAPrivateData	O	Specifies on-standardized information.

© ISO/IEC 2007 – All rights reserved
Copyright International Organization for Standardization
Provided by IHS under license with ISO
No reproduction or networking permitted without license from IHS
Not for Resale

17.2.10.2 Event Causes

Table 17-163 Held —Event Causes

Event Cause	Description	Associated Features
Alternate	The call was held at a device as part of an alternate feature.	Alternate Call
Conference	The call was held at a device as a part of a consultation with the intended purpose of establishing a conference.	Consultation Call with a consultOptions of ConferenceOnly
Consultation	The call was held at a device as part of a consultation.	Consultation Call
Intrude	The call was held at a device because the Intrude Call service was executed successfully.	Intrude Call
Maintenance	The call was placed on hold at a device that entered maintenance conditions (e.g. mobile handset out of coverage).	Maintenance
Network Signal	The call was held by a device that is outside of the switching sub-domain.	External Call
Normal	The call was held at a device (a more specific cause cannot be provided).	Any feature
Recall	The call was held at a device due to the activation of the recall feature.	Recall
Suspend	The call was temporarily placed on hold at a device that went onhook.	Call Clearing
Transfer	The call was held at a device as part of a transfer feature.	Consultation Call with a consultOptions of Transfer Only

17.2.11 Network Capabilities Changed

The Network Capabilities Changed event indicates that a situation occurred during a call's progress in a public or private network that modifies its signalling capability (i.e., inter-networking). It does not indicate a change in the connection state of the Network Interface Device (e.g., trunk, CO Line) through which the call has accessed the network.

This event shall always be preceded by a Network Reached event that included the networkCapability parameter. The event may be repeated according to the situations encountered in the network.

© ISO/IEC 2007 – All rights reserved

Copyright International Organization for Standardization
Provided by IHS under license with ISO
No reproduction or networking permitted without license from IHS
Not for Resale

Figure 17-43 Network Capabilities Changed Event

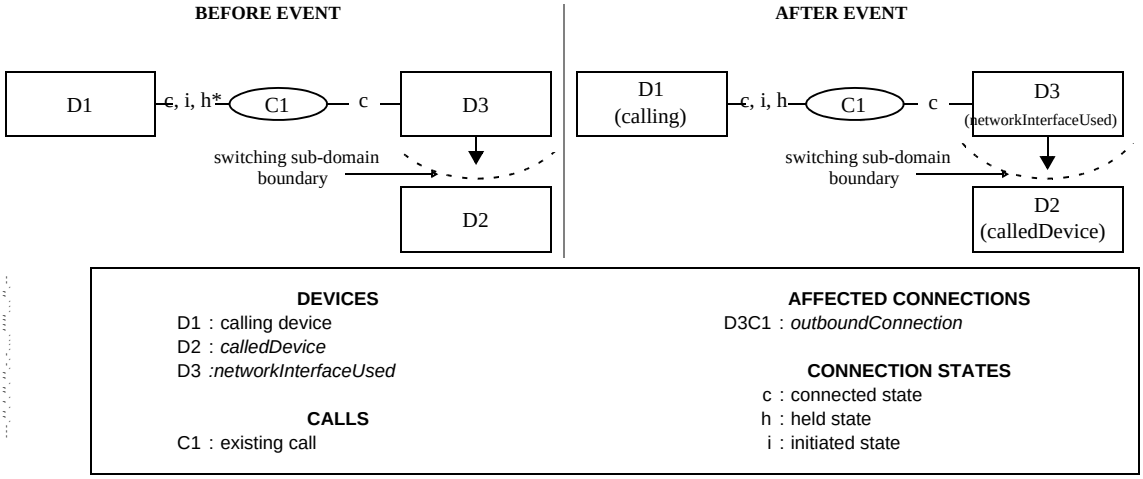

Note that the * held state when an external outgoing call in progress is placed held.

17.2.11.1 Event Parameters

Table 17-164 Network Capabilities Changed—Event Parameters

Parameter Name	Type	M/ O/C	Description
monitorCrossRefID	MonitorCrossRefID	M	Associates the event to an established monitor.
outboundConnection	ConnectionID	M	Specifies the outbound connection of the network interface device.
networkInterfaceUsed	SubjectDeviceID	M	Specifies the Network Interface Device (e.g., trunk, CO Line) that was selected.
calledDevice	CalledDeviceID	M	Specifies the destination device.

© ISO/IEC 2007 – All rights reserved
Copyright International Organization for Standardization
Provided by IHS under license with ISO
No reproduction or networking permitted without license from IHS
Not for Resale

Table 17-164 Network Capabilities Changed—Event Parameters (continued)

Parameter Name	Type	M/ O/C	Description
progressIndicator	Structure	M	Specifies an interworking situation encountered in the public or private network outside the switching sub-domain. As a consequence of entering the network, the level of event reporting associated with this call may be reduced. This parameter consists of the following components: 1. progressLocation (M) - It may be one of the following: • User • Private network serving the local user • Public network serving the local user • Transit network • Public network serving the remote user • Private network serving the remote user • Local interface controlled by the signalling link • International Network • Network beyond interworking point • Other 2. progressDescription (M) - It may be one of the following: • ISDN Progress Description - This information is derived from ETSI ETS 300 182: 1993. • QSIG Progress Description - This information is derived from ECMA-143. • Other
localConnectionInfo	LocalConnectionState	C	Specifies the local connection state of the device associated with the Monitor Cross Reference ID. The following are the states of the devices in the call. • For the network interface device: Connected • For the other devices left in the call: (Unaffected) This parameter is mandatory for events generated for device-type monitors.
correlatorData	CorrelatorData	C	Specifies the correlator data associated with the call. This parameter is mandatory if there is correlator data associated with the call and shall otherwise not be provided.
userData	UserData	C	Specifies user information that is related to the call. This parameter is mandatory if user data is sent and the parameter is supported, otherwise it shall not be included.

© ISO/IEC 2007 – All rights reserved

Copyright International Organization for Standardization
Provided by IHS under license with ISO
No reproduction or networking permitted without license from IHS
Not for Resale

Table 17-164 Network Capabilities Changed—Event Parameters (continued)

Parameter Name	Type	M/ O/C	Description
networkCapability	Structure	O	Specifies the type of network reached and the Call Control events supported by the network. It includes the following components: 1. networkType (M) - The complete set of possible values is: • ISDN public • Non-ISDN public • ISDN private • Non-ISDN private • Other 2. eventsProvided (O) - This is a bitmap of all of the Call Control events defined in this Standard.
cause	EventCause	M	Specifies the reason for the event.
servicesPermitted	ServicesPermitted	C	Specifies a list of the call control services that can be applied to the local connection. This parameter is mandatory if the switching function supports the Dynamic Feature Availability option (as indicated through the capabilities exchange services), otherwise this parameter is optional.
mediaCallCharacteristics	MediaCallCharacteristics	O	Specifies the media class and media characteristics of the call. See 12.2.18, “MediaCallCharacteristics”, on page 130 for the complete description.
callCharacteristics	CallCharacteristics	O	Specifies the high level characteristics (ACD call, Priority call, etc.) associated with the call. See 12.2.4, “CallCharacteristics”, on page 108 for the complete set of possible values.
outboundConnectionInfo	ConnectionInformation	O	Specifies the connection information associated with the outboundConnection connection. If this parameter is not present, then the connection information is switching function specific.
callLinkageData	CallLinkageData	C	Specifies the global call data and thread data associated with the call. This parameter is mandatory if the switching function supports the call linkage feature otherwise it shall not be provided.
languagePreferences	LanguagePreferences	O	Specifies the language preferences associated with the call.
security	CSTASecurityData	O	Specifies timestamp information, message sequence number, and security information.
privateData	CSTAPrivateData	O	Specifies non-standardized information.

17.2.11.2 Event Causes

Table 17-165 Network Capabilities Changed—Event Causes

Event Cause	Description	Associated Features
Network Signal	The call encountered an interworking situation.	External Call

17.2.12 Network Reached

The Network Reached event indicates that a call has cut through the switching sub-domain boundary to another network; that is, has reached and engaged a Network Interface Device (e.g., trunk, CO Line). This

© ISO/IEC 2007 – All rights reserved

Copyright International Organization for Standardization
Provided by IHS under license with ISO
No reproduction or networking permitted without license from IHS
Not for Resale

event indicates that there may be a reduced level of event reporting and possibly no additional device feedback, except connection/call clearing, provided for this device in the call due to a lack of network signalling. The level of signalling provided by the network may be indicated by the networkCapability parameter.

Additionally, the computing function should assume that it cannot directly manipulate the far-end device associated with the Network Interface Device.

This event is never sent for calls made to devices that are within the switching sub-domain. This event indicates that a connection with a Network Interface Device has reached the connected state, and that further events for that connection refer to the state of the endpoint which the Network Interface Device is associated.

A common situation that generates this event includes:

- An outgoing call has cut-through at a network interface device and further call progress information, such as the Delivered and Established events, may not be available.

Figure 17-44 Network Reached Event

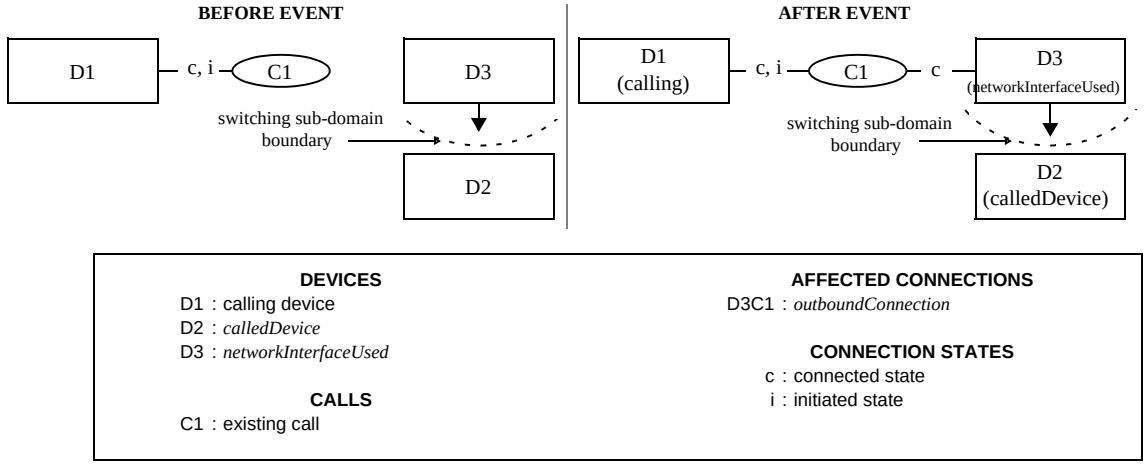

17.2.12.1 Event Parameters

Table 17-166 Network Reached—Event Parameters

Parameter Name	Type	M/ O/C	Description
monitorCrossRefID	MonitorCrossRefID	M	Associates the event to an established monitor.
outboundConnection	ConnectionID	M	Specifies the outbound connection associated with the call that is leaving the switching sub-domain.
networkInterfaceUsed	SubjectDeviceID	M	Specifies the Network Interface Device that was selected.
callingDevice	CallingDeviceID	M	Specifies the calling device.
calledDevice	CalledDeviceID	M	Specifies the originally called device.
lastRedirectionDevice	RedirectionDeviceID	M	Specifies the previously known redirected from device.
originatingNIDConnection	ConnectionID	O	Specifies the connection of the Network Interface Device (NID) that the call originated from. If this parameter is supported, it shall be provided if there is an originating NID associated with the call, otherwise it shall not be provided.

--`,,```,,,,````-`-`,,`,,`,`,,`---
© ISO/IEC 2007 – All rights reserved

Copyright International Organization for Standardization
Provided by IHS under license with ISO
No reproduction or networking permitted without license from IHS
Not for Resale

Table 17-166 Network Reached—Event Parameters (continued)

Parameter Name	Type	M/ O/C	Description
localConnectionInfo	LocalConnectionState	C	Specifies the local connection state of the device associated with the Monitor Cross Reference ID. The following are the states of the devices in the call. • For the Network Interface Device: Connected • For the other devices left in the call: (unaffected) This parameter is mandatory for events generated for device-type monitors.
correlatorData	CorrelatorData	C	Specifies the correlator data associated with the call. This parameter is mandatory if there is correlator data associated with the call and shall otherwise not be provided.
userData	UserData	C	Specifies user information that is related to the call. This parameter is mandatory if user data is sent and the parameter is supported, otherwise it shall not be included.
networkCapability	Structure	O	Specifies the type of network reached and the Call Control events supported by the network. It includes the following components: 1. networkType (M) - The complete set of possible values is: • ISDN public • Non-ISDN public • ISDN private • Non-ISDN private • Other 2. eventsProvided (O) - This is a bitmap of the Call Control events defined in this Standard.
cause	EventCause	M	Specifies the reason for the event.
servicesPermitted	ServicesPermitted	C	Specifies a list of the call control services that can be applied to the local connection. This parameter is mandatory if the switching function supports the Dynamic Feature Availability option (as indicated through the capabilities exchange services), otherwise this parameter is optional.
mediaCallCharacteristics	MediaCallCharacteristics	O	Specifies the media class and media characteristics of the call. See 12.2.18, “MediaCallCharacteristics”, on page 130 for the complete description.
callCharacteristics	CallCharacteristics	O	Specifies the high level characteristics (ACD call, Priority call, etc.) associated with the call. See 12.2.4, “CallCharacteristics”, on page 108 for the complete set of possible values.
outboundConnectionInfo	ConnectionInformation	O	Specifies the connection information associated with the outboundConnection connection. If this parameter is not present, then the connection information is switching function specific.
networkCallingDevice	NetworkCallingDeviceID	O	Specifies the original calling device information provided by the network for external incoming calls. This parameter is provided only for external incoming calls (that, in this case are also outgoing calls).

--`,,```,,,,````-`-`,,`,,`,`,,`---
© ISO/IEC 2007 – All rights reserved
Copyright International Organization for Standardization
Provided by IHS under license with ISO
No reproduction or networking permitted without license from IHS
Not for Resale

Table 17-166 Network Reached—Event Parameters (continued)

Parameter Name	Type	M/ O/C	Description
networkCalledDevice	NetworkCalledDeviceID	O	Specifies the original called device information provided by the network for external incoming calls. This parameter is provided only for external incoming calls (that, in this case are also outgoing calls).
associatedCallingDevice	AssociatedCallingDeviceID	C	Specifies the Network Interface Device associated with the calling device if the call is an external incoming call (that, in this case is also an outgoing). This parameter is mandatory for all external incoming calls and shall not be provided otherwise.
callLinkageData	CallLinkageData	C	Specifies the global call data and thread data associated with the call. This parameter is mandatory if the switching function supports the call linkage feature otherwise it shall not be provided.
languagePreferences	LanguagePreferences	O	Specifies the language preferences associated with the call.
deviceHistory	DeviceHistory	O	Specifies the list of devices which were previously associated with the call (e.g. redirecting, transferring, clearing devices).
security	CSTASecurityData	O	Specifies timestamp information, message sequence number, and security information.
privateData	CSTAPrivateData	O	Non-standardized information attached to the event.

17.2.12.2 Event Causes

Table 17-167 Network Reached—Event Causes

Event Cause	Description	Associated Features
ACD Forward	The call left the switching sub-domain because it was forwarded from one ACD device to another ACD device and is no longer present at the previous ACD device.	ACD
Call Forward	The call left the switching sub-domain after it was forwarded (any type of forwarding).	Forwarding
Call Forward—Busy	The call left the switching sub-domain after it was forwarded because of a busy condition.	Forwarding
Call Forward—Immediate	The call left the switching sub-domain after it was forwarded (forwarding on all conditions).	Forwarding
Call Forward—No Answer	The call left the switching sub-domain after it was forwarded because of a no answer condition.	Forwarding
Conference	The call that left the switching sub-domain involves a conference resource or is intended to be part of a conference.	Any conference feature
Distributed	The call left the switching sub-domain after it was distributed by an ACD or hunt group.	ACD
No Agents Available	The call left the switching sub-domain after it was diverted from a device because there were no available devices in a group (ACD).	ACD, distribution
Normal	The call left the switching sub-domain (a more specific event cause cannot be provided).	Any feature
Overflow	The call left the switching sub-domain after it overflowed a queue, group, or target.	ACD

© ISO/IEC 2007 – All rights reserved

Copyright International Organization for Standardization
Provided by IHS under license with ISO
No reproduction or networking permitted without license from IHS
Not for Resale

Table 17-167 Network Reached—Event Causes (continued)

Event Cause	Description	Associated Features
Redirected	The call left the switching sub-domain after it was diverted or deflected.	Deflect Call
Resources Not Available	The call left the switching sub-domain after it was diverted from a device because there were no resources available to process it.	ACD, distribution
Transfer	The call was transferred to a destination outside the switching sub-domain.	Transfer

17.2.12.3 Functional Requirements

1. When observing a call or a device in a call, and the call diverts from a device in the call, if the switching function does not provide the Diverted event for all devices in a call or for call-type monitors (as indicated through the capabilities exchange services option), the computing function shall use the networkInterfaceUsed, calledDevice, lastRedirectionDevice, and cause (EventCause parameter type) parameters to properly track the progress of the call as a result of the redirection. See 6.7.6, “Tracking a Diverted Call”, on page 75 for more information.
2. After a call has cut through the switching sub-domain boundary to another network (Network Reached event generated), all subsequent events reported for the endpoint to which the Network Interface Device (e.g., trunk, CO Line) is associated shall include a cause parameter with a cause of Network Signal or a more specific cause representing network information.
3. For external incoming calls, the contents of the networkCallingDeviceID and the networkCalledDeviceID parameters shall not change as long as the associatedCallingDevice remains in the call. This differs from the callingDeviceID and the calledDeviceID parameters in that these parameters may change as a result of features such as transfer, forwarding, and conferencing, etc.

17.2.13 Offered

The Offered event indicates that the connection is in the Offered mode of the Alerting state. This indicates that a call is in a pre-delivery state.

In this pre-delivery state, the opportunity exists for a computing function to issue one of a set of supported services (e.g., Accept Call, Clear Connection (“reject”), Deflect Call) or an ISDN device to accept or reject the call. From the calling side perspective, the call is not delivered at the called device. As a consequence, delivery information such as Ringback indication and/or Network signalling is not provided. For example, the device makes no ringing sounds while in the Offered mode of the Alerting state.

The connection may transit to the Ringing mode of the Alerting state after the call is accepted (See 17.1.1, “Accept Call”, on page 216) or after a time out period, for example.

© ISO/IEC 2007 – All rights reserved
Copyright International Organization for Standardization
Provided by IHS under license with ISO
No reproduction or networking permitted without license from IHS
Not for Resale

Figure 17-45 Offered Event

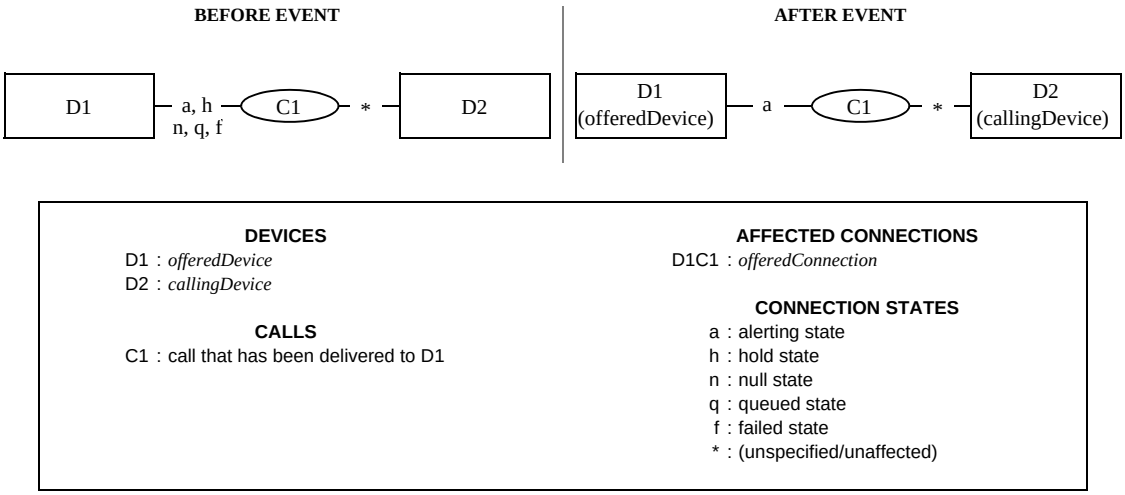

17.2.13.1 Event Parameters

Table 17-168 Offered—Event Parameters

Parameter Name	Type	M/ O/C	Description
monitorCrossRefID	MonitorCrossRefID	M	Associates the event to an established monitor.
offeredConnection	ConnectionID	M	Specifies the connection that is alerting.
offeredDevice	SubjectDeviceID	M	Specifies the device that is alerting.
callingDevice	CallingDeviceID	M	Specifies the calling device.
calledDevice	CalledDeviceID	M	Specifies the originally called device.
lastRedirectionDevice	RedirectionDeviceID	M	Specifies the previously known redirected from device.
originatingNIDConnection	ConnectionID	O	Specifies the connection of the Network Interface Device (NID) that the call originated from. If this parameter is supported, it shall be provided if there is an originating NID associated with the call, otherwise it shall not be provided. See Functional Requirement #3.
localConnectionInfo	LocalConnectionState	C	Specifies the local connection state of the device associated with the Monitor Cross Reference ID. The following are the states of the devices in the call. • For the alerting device: Alerting • For the calling device: (unaffected) This parameter is mandatory for events generated for device-type monitors.
correlatorData	CorrelatorData	C	Specifies the correlator data associated with the call. This parameter is mandatory if there is correlator data associated with the call and shall otherwise not be provided.
userData	UserData	C	Specifies user information that is related to the call. This parameter is mandatory if user data is sent and the parameter is supported, otherwise it shall not be included.
cause	EventCause	M	Specifies the reason for the event.

© ISO/IEC 2007 – All rights reserved

Copyright International Organization for Standardization
Provided by IHS under license with ISO
No reproduction or networking permitted without license from IHS
Not for Resale

Table 17-168 Offered—Event Parameters (continued)

Parameter Name	Type	M/ O/C	Description
servicesPermitted	ServicesPermitted	C	Specifies a list of the call control services that can be applied to the local connection. This parameter is mandatory if the switching function supports the Dynamic Feature Availability option (as indicated through the capabilities exchange services), otherwise this parameter is optional.
networkCallingDevice	NetworkCallingDeviceID	O	Specifies the original calling device information provided by the network for external incoming calls. This parameter is provided only for external incoming calls.
networkCalledDevice	NetworkCalledDeviceID	O	Specifies the original called device information provided by the network for external incoming calls. This parameter is provided only for external incoming calls.
associatedCallingDevice	AssociatedCallingDeviceID	C	Specifies the Network Interface Device associated with the calling device if the call is an external incoming call. This parameter is mandatory for all external incoming calls and shall not be provided otherwise.
associatedCalledDevice	AssociatedCalledDeviceID	C	For outgoing external calls, this parameter specifies the Network Interface Device associated with the called device. For incoming external calls, this parameter specifies a device within the switching sub-domain associated with the originally called device. This parameter is mandatory for all external outgoing calls and it is optional for external incoming calls.
mediaCallCharacteristics	MediaCallCharacteristics	O	Specifies the media class and media characteristics of the call. See 12.2.18, “MediaCallCharacteristics”, on page 130 for the complete description.
callCharacteristics	CallCharacteristics	O	Specifies the high level characteristics (ACD call, Priority call, etc.) associated with the call. See 12.2.4, “CallCharacteristics”, on page 108 for the complete set of possible values.
offeredConnectionInfo	ConnectionInformation	O	Specifies the connection information associated with the offeredConnection connection. If this parameter is not present, then the connection information is switching function specific.
callLinkageData	CallLinkageData	C	Specifies the global call data and thread data associated with the call. This parameter is mandatory if the switching function supports the call linkage feature otherwise it shall not be provided.
subjectOfCall	SubjectOfCall	O	Specifies the subject/intent of the call. This could represent the subject header of an Email (text call) or intent for a voice call, for example.
messageInfo	MessageInfo	O	Specifies the contents of message information associated with a call. The message information consists of one of more items.
languagePreferences	LanguagePreferences	O	Specifies the language preferences associated with the call.
deviceHistory	DeviceHistory	O	Specifies the list of devices which were previously associated with the call (e.g. redirecting, transferring, clearing devices).
security	CSTASecurityData	O	Specifies timestamp information, message sequence number, and security information.
privateData	CSTAPrivateData	O	Non-standardized information attached to the event.

© ISO/IEC 2007 – All rights reserved

Copyright International Organization for Standardization
Provided by IHS under license with ISO
No reproduction or networking permitted without license from IHS
Not for Resale

17.2.13.2 Event Causes

Table 17-169 Offered—Event Causes

Event Cause	Description	Associated Features
ACD Busy	The call was offered to an ACD device that has currently no available agents.	ACD, Consultation Call
ACD Forward	The call was offered to a new device and is no longer queued at the previous ACD device.	ACD
ACD Saturated	The call was offered to an ACD device that has currently no internal resources available (including agents).	ACD, Consultation Call
Call Back	The call was offered to a device because of a previously set call back feature.	Call Back Call-Related
Call Forward	The call was offered to a device after it was forwarded (any type of forwarding).	Call Forwarding
Call Forward—Busy	The call was offered to a device after it was forwarded because of a busy condition.	Call Forwarding
Call Forward—Immediate	The call was offered to a device after it was forwarded (forwarding on all conditions).	Call Forwarding
Call Forward—No Answer	The call was offered to a device after it was forwarded because of a no answer condition.	Call Forwarding
Conference	The call that is being offered to a device involves a conference resource or is intended to be part of a conference.	Any conference feature
Distributed	The call was offered to a device because the call has moved from the distribution mechanism (ACD, Hunt) to an available device associated with the distribution mechanism.	ACD, Routeing Services
Entering Distribution	The call was offered to a distribution mechanism (ACD, Hunt) for the purpose of being distributed.	ACD, Routeing Services
Key Operation	The call was offered to a device that has an appearance in a call appearance, bridged, or hybrid device configuration.	Multiple Appearance
Multiple Alerting	The call that is alerting the subject device is also alerting other devices.	Multiple Alerting
Network Signal	The call was offered to a device that is outside of the switching sub-domain.	External Calls
New Call	The call was not redirected.	Any feature
No Available Agents	The call was offered to a device because there were no available devices in a group (ACD).	ACD, Forwarding
Normal	The call was offered to a device (a more specific cause cannot be provided).	Any feature
Overflow	The call was offered to a device after it overflowed a queue, group, or target.	ACD
Override	The call was offered to a device as a result of an override (e.g., Intrude Call) feature.	Intrude Call
Recall	The call was offered to a device as part of the recall feature (any type of recall).	Recall
Recall - Busy	The call was offered to a device as part of the recall feature due to a busy condition at the intended device.	Recall

© ISO/IEC 2007 – All rights reserved

Copyright International Organization for Standardization
Provided by IHS under license with ISO
No reproduction or networking permitted without license from IHS
Not for Resale

Table 17-169 Offered—Event Causes (continued)

Event Cause	Description	Associated Features
Recall - No Answer	The call was offered to a device as part of the recall feature due to a no answer condition at the intended device.	Recall
Recall - Forwarded	The call was offered to a device as part of the recall feature due to a forwarding condition at the intended destination.	Recall
Recall - Resources Not Available	The call was offered to a device as part of the recall feature due to unavailble resources at the intended device.	Recall
Redirected	The call was offered to a device after it was diverted from or deflected to this device.	Deflect Call
Remains in Queue	The call was offered to a device while the calling device's position in the queue is retained. For example, the call could be offered to a VRU or other automated answering equipment while the calling device retains its position in the ACD queue.	ACD, Queuing, Single Step Conference, Join Call
Resources Not Available	The call was offered because some resources were not available (ACD, forwarding).	ACD, Forwarding
Single Step Transfer	The call alerted the device due to a Single Step Transfer service.	Single Step Transfer
Single Step Conference	The call alerted the device due to a Single Step Conference service.	Single Step Conference
Timeout	The event was generated because a trunk timer expired. It is not generated as the result of a particular network event or condition.	External calls

17.2.13.3 Functional Requirements

1. Switching function implementations vary in their support for call control services while the Offered mode of the alerting state. The computing function shall determine supported services for Offered mode through the capabilities exchange services.
2. The switching function may support an Offered mode time-out. For example, if no service is applied to the connection within an switching function-specific period, it will transit from the Offered mode to the Ringing mode of the alerting state.
3. If there is more than one calling device (i.e. a conference calling back to a device), then the originatingNIDConnection parameter will not be present.
4. When a call is offered to a bridged device configuration, multiple Offered events are sent (one for each appearance of the device configuration). Each event will contain the following type of information:
   - The event for the appearance which is offered the call first will have the appropriate event cause on why the call is being offered to the device configuration. All subsequence events for the other appearances will have an event cause of Key Operation.
   - The offeredConnection will be the connection identifier of the specific appearance.
   - The offeredDevice will depend on the type of referencing model that is supported by the switching function (refer to 6.1.5, "Referencing Devices, Elements, Appearances and Device Configurations", on page 54).
   - The calledDevice or associatedCalledDevice will contain the device identifier associated with the logical element of the device.

© ISO/IEC 2007 – All rights reserved

Copyright International Organization for Standardization
Provided by IHS under license with ISO
No reproduction or networking permitted without license from IHS
Not for Resale

5. When observing a call or a device in a call, and the call diverts from a device in the call, if the switching function does not provide the Diverted event for all devices in a call or for call-type monitors (as indicated through the capabilities exchange services option), the computing function shall use the offeredDevice, calledDevice, lastRedirectionDevice, and cause (eventCause parameter type) parameters to properly track the progress of the call as a result of the redirection. See 6.7.6, “Tracking a Diverted Call”, on page 75 for more information.
6. For external incoming calls, the contents of the networkCallingDeviceID and the networkCalledDeviceID parameters shall not change as long as the associatedCallingDevice remains in the call. This differs from the callingDeviceID and the calledDeviceID parameters in that these parameters may change as a result of features such as transfer, forwarding, and conferencing, etc.

17.2.14 Originated

The Originated event indicates that a call is being attempted from a device. It implies that input activity for the call is complete and that a call (rather than a feature) has been requested.

Common situations that generate this event when the switch has originated a call at the originating device are:

- Due to the execution of the Make Call service.
- Due to the execution of the Consultation Call service.
- After a user has completed manually dialling a number.
- When an external incoming call originates from a Network Interface Device (e.g., trunk, CO line).

Figure 17-46 Originated Event

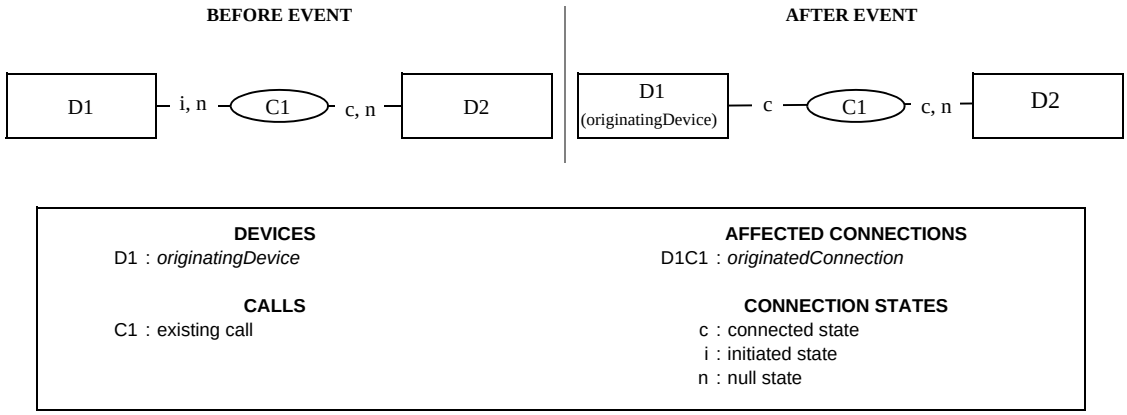

Note that the connected state for D2C1 is when D2 is a NID.

17.2.14.1 Event Parameters

Table 17-170 Originated—Event Parameters

Parameter Name	Type	M/ O/C	Description
monitorCrossRefID	MonitorCrossRefID	M	Associates the event to an established monitor.
originatedConnection	ConnectionID	M	Specifies the connection at which the call originated.
callingDevice	SubjectDeviceID	M	Specifies the calling device.
calledDevice	CalledDeviceID	M	Specifies the originally called device.

© ISO/IEC 2007 – All rights reserved

Copyright International Organization for Standardization
Provided by IHS under license with ISO
No reproduction or networking permitted without license from IHS
Not for Resale

Table 17-170 Originated—Event Parameters (continued)

Parameter Name	Type	M/ O/C	Description
originatingDevice	DeviceID	O	Specifies the originating device. The originating device represents a device that originated a call in the switching sub-domain on behalf of the calling device (e.g., a group of stations). The originating device shall not represent a Network Interface Device. This parameter may be provided for external outgoing and internal calls when the originating device is different from the calling device. This parameter shall not be provided for external incoming calls or when the originating device is identical to the calling device.
localConnectionInfo	LocalConnectionState	C	Specifies the local connection state of the device associated with the Monitor Cross Reference ID. The following are the states of the devices in the call. • For the device initiating the call: Connected This parameter is mandatory for events generated for device-type monitors.
correlatorData	CorrelatorData	C	Specifies the correlator data associated with the call. This parameter is mandatory if there is correlator data associated with the call and shall otherwise not be provided.
cause	EventCause	M	Specifies the reason for the event.
servicesPermitted	ServicesPermitted	C	Specifies a list of the call control services that can be applied to the local connection. This parameter is mandatory if the switching function supports the Dynamic Feature Availability option (as indicated through the capabilities exchange services), otherwise this parameter is optional.
networkCallingDevice	NetworkCallingDeviceID	O	Specifies the original calling device information provided by the network for external incoming calls. This parameter is provided only for external incoming calls.
networkCalledDevice	NetworkCalledDeviceID	O	Specifies the original called device information provided by the network for external incoming calls. This parameter is provided only for external incoming calls.
associatedCallingDevice	AssociatedCallingDeviceID	C	Specifies the Network Interface Device associated with the calling device if the call is an external incoming call. This parameter is mandatory for all external incoming calls and shall not be provided otherwise.
associatedCalledDevice	AssociatedCalledDeviceID	C	For outgoing external calls, this parameter specifies the Network Interface Device associated with the called device. For incoming external calls, this parameter specifies a device within the switching sub-domain associated with the originally called device. This parameter is mandatory for all external outgoing calls and it is optional for external incoming calls.
mediaCallCharacteristics	MediaCallCharacteristics	O	Specifies the media class and media characteristics of the call. See12.2.18, “MediaCallCharacteristics”, on page 130 for the complete description.
callCharacteristics	CallCharacteristics	O	Specifies the high level characteristics (ACD call, Priority call, etc.) associated with the call. See 12.2.4, “CallCharacteristics”, on page 108 for the complete set of possible values.

© ISO/IEC 2007 – All rights reserved

Copyright International Organization for Standardization
Provided by IHS under license with ISO
No reproduction or networking permitted without license from IHS
Not for Resale

Table 17-170 Originated—Event Parameters (continued)

Parameter Name	Type	M/ O/C	Description
originatedConnectionInfo	ConnectionInformation	O	Specifies the connection information associated with the originatedConnection connection. If this parameter is not present, then the connection information is switching function specific.
callLinkageData	CallLinkageData	C	Specifies the global call data and thread data associated with the call. This parameter is mandatory if the switching function supports the call linkage feature otherwise it shall not be provided.
subjectOfCall	SubjectOfCall	O	Specifies the subject/intent of the call. This could represent the subject header of an Email (text call) or intent for a voice call, for example.
messageInfo	MessageInfo	O	Specifies the contents of message information associated with a call. The message information consists of one of more items.
languagePreferences	LanguagePreferences	O	Specifies the language preferences associated with the call.
security	CSTASecurityData	O	Specifies timestamp information, message sequence number, and security information.
privateData	CSTAPrivateData	O	Non-standardized information attached to the event.

17.2.14.2 Event Causes

Table 17-171 Originated—Event Causes

Event Cause	Description	Associated Features
Call Back	A call was originated from a device because a previously set call back feature.	Call Back Call-Related, Call Back Non-Call-Related
Conference	A call was originated from a device as part of consultation with the intended purpose of establishing a conference.	Consultation Call with a consultOptions of ConferenceOnly
Consultation	A call was originated from a device as part of a consultation call.	Consultation Call
Make Call	A call was originated from a device as the result of the Make Call service.	Make Call (without prompting)
New Call	A call was originated.	Any feature
Normal	A call was originated from a device (a more specific event cause cannot be provided).	Any feature, Make Call
Transfer	A call was originated from a device as part of a consultation for the purpose of transferring a call.	Consultation Call with a consultOptions of TransferOnly

17.2.14.3 Functional Requirements

1. This event will only be generated when the computing function has a device-type or call-type monitoring applied to a device that is initiating a call.
2. This event will only be generated on an incoming call from a device outside the switching sub-domain when the device is a Network Interface Device that can have monitoring applied to it.
3. For external incoming calls, the contents of the networkCallingDeviceID and the networkCalledDeviceID parameters shall not change as long as the associatedCallingDevice remains in the call. This differs from

© ISO/IEC 2007 – All rights reserved

Copyright International Organization for Standardization
Provided by IHS under license with ISO
No reproduction or networking permitted without license from IHS
Not for Resale

the callingDeviceID and the calledDeviceID parameters in that these parameters may change as a result of features such as transfer, forwarding, and conferencing, etc.

17.2.15 Queued

The Queued event indicates that a call has been queued.

Common situations that generate this event include:

- A call is queued at an ACD or hunt group device.
- A call is queued (camped on or parked, for example) at a device.

Figure 17-47 Queued Event

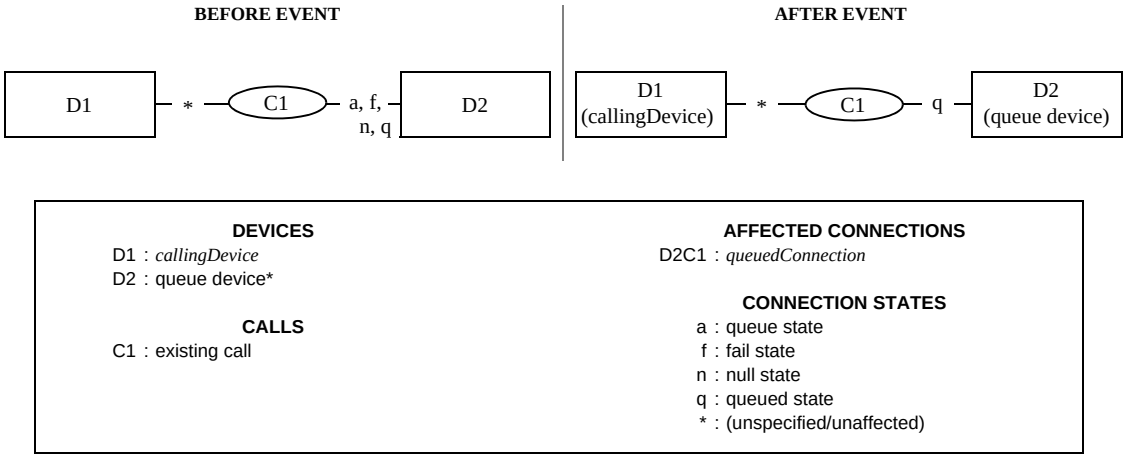

*There are some situations where D2 can be the calling device.

17.2.15.1 Event Parameters

Table 17-172 Queued—Event Parameters

Parameter Name	Type	M/ O/C	Description
monitorCrossRefID	MonitorCrossRefID	M	Associates the event to an established monitor.
queuedConnection	ConnectionID	M	Specifies the queued connection.
queue	SubjectDeviceID	M	Specifies the queue device.
callingDevice	CallingDeviceID	M	Specifies the calling device.
calledDevice	CalledDeviceID	M	Specifies the originally called device.
lastRedirectionDevice	RedirectionDeviceID	M	Specifies the previously known redirected from device.
numberQueued	Value	O	Specifies the total number of calls in queue, including this call.
callsInFront	Value	O	Specifies the number of calls ahead of the call when it was enqueued (this call is not counted in this number).

© ISO/IEC 2007 – All rights reserved
Copyright International Organization for Standardization
Provided by IHS under license with ISO
No reproduction or networking permitted without license from IHS
Not for Resale

Table 17-172 Queued—Event Parameters (continued)

Parameter Name	Type	M/ O/C	Description
localConnectionInfo	LocalConnectionState	C	Specifies the local connection state of the device associated with the Monitor Cross Reference ID. The following are the states of the devices in the call. • For the queue device: Queued • For the other devices left in the call: (unaffected) This parameter is mandatory for events generated for device-type monitors.
correlatorData	CorrelatorData	C	Specifies the correlator data associated with the call. This parameter is mandatory if there is correlator data associated with the call and shall otherwise not be provided.
userData	UserData	C	Specifies user information that is related to the call. This parameter is mandatory if user data is sent and the parameter is supported, otherwise it shall not be included.
cause	EventCause	M	Specifies the reason for the event.
servicesPermitted	ServicesPermitted	C	Specifies a list of the call control services that can be applied to the local connection. This parameter is mandatory if the switching function supports the Dynamic Feature Availability option (as indicated through the capabilities exchange services), otherwise this parameter is optional.
networkCallingDevice	NetworkCallingDeviceID	O	Specifies the original calling device information provided by the network for external incoming calls. This parameter is provided only for external incoming calls.
networkCalledDevice	NetworkCalledDeviceID	O	Specifies the original called device information provided by the network for external incoming calls. This parameter is provided only for external incoming calls.
associatedCallingDevice	AssociatedCallingDeviceID	C	Specifies the Network Interface Device associated with the calling device if the call is an external incoming call. This parameter is mandatory for all external incoming calls and shall not be provided otherwise.
associatedCalledDevice	AssociatedCalledDeviceID	C	For outgoing external calls, this parameter specifies the Network Interface Device associated with the called device. For incoming external calls, this parameter specifies a device within the switching sub-domain associated with the originally called device. This parameter is mandatory for all external outgoing calls and it is optional for external incoming calls.
mediaCallCharacteristics	MediaCallCharacteristics	O	Specifies the media class and media characteristics of the call. See 12.2.18, “MediaCallCharacteristics”, on page 130 for the complete description.
callCharacteristics	CallCharacteristics	O	Specifies the high level characteristics (ACD call, Priority call, etc.) associated with the call. See 12.2.4, “CallCharacteristics”, on page 108 for the complete set of possible values.
queuedConnectionInfo	ConnectionInformation	O	Specifies the connection information associated with the queuedConnection connection. If this parameter is not present, then the connection information is switching function specific.

© ISO/IEC 2007 – All rights reserved

Copyright International Organization for Standardization
Provided by IHS under license with ISO
No reproduction or networking permitted without license from IHS
Not for Resale

Table 17-172 Queued—Event Parameters (continued)

Parameter Name	Type	M/ O/C	Description
callLinkageData	CallLinkageData	C	Specifies the global call data and thread data associated with the call. This parameter is mandatory if the switching function supports the call linkage feature otherwise it shall not be provided.
subjectOfCall	SubjectOfCall	O	Specifies the subject/intent of the call. This could represent the subject header of an Email (text call) or intent for a voice call, for example.
messageInfo	MessageInfo	O	Specifies the contents of message information associated with a call. The message information consists of one of more items.
languagePreferences	LanguagePreferences	O	Specifies the language preferences associated with the call.
deviceHistory	DeviceHistory	O	Specifies the list of devices which were previously associated with the call (e.g. redirecting, transferring, clearing devices).
security	CSTASecurityData	O	Specifies timestamp information, message sequence number, and security information.
privateData	CSTAPrivateData	O	Specified non-standardized information.

17.2.15.2 Event Causes

Table 17-173 Queued—Event Causes

Event Cause	Description	Associated Features
Busy	The call was queued at a called device because the device was active on another call and unable to accept this call.	Make Call, Consultation Call, Deflect Call, Single-Step Conference Call, Single-Step Transfer Call
Call Forward	The call was immediately queued to a device after it was forwarded.	Call Forwarding
Call Forward—Busy	The call was immediately queued to a device after it was forwarded because of a busy condition.	Call Forwarding
Call Forward—Immediate	The call was immediately queued to a device after it was forwarded (forwarding on all conditions).	Call Forwarding
Call Forward—No Answer	The call was immediately queued to a device after it was forwarded because of a no answer condition.	Call Forwarding
Camp On	The call was queued to a device because of the camp on feature.	Camp On Call
Camp On Trunks	The call was queued to a trunk because of the camp on feature.	External Call, Camp On Call
Distribution Delay	The distribution of the call was delayed at a distribution device for distribution device specific reasons (e.g. preconnect announcement).	ACD, queueing
Do Not Disturb	The call was queued at a device after it encountered a device with Do Not Disturb feature set.	Forwarding
Multiple Queueing	The call that is queued is also queued at other devices.	Multiple Queueing
Network Congestion	The call was queued because the call encountered a congested network.	External Call

--`,,```,,,,````-`-`,,`,,`,`,,`---
© ISO/IEC 2007 – All rights reserved
Copyright International Organization for Standardization
Provided by IHS under license with ISO
No reproduction or networking permitted without license from IHS
Not for Resale

Table 17-173 Queued—Event Causes (continued)

Event Cause	Description	Associated Features
Network Not Obtainable	The call could not reach a destination network.	External Call
Network Signal	The call was queued to a device outside of the switching sub-domain.	External Call
No Available Agents	The call was queued to a device because there were no available agents.	ACD
Normal	The call was queued to a device (a more specific cause cannot be provided).	Any feature
Overflow	The call was queued to a device after it overflowed a queue, group, or target.	ACD, queueing
Park	The call was queued because of the park feature.	Park Call
Recall	The call was queued to a device as part of the recall feature (any type of recall).	Recall
Recall - Busy	The call was queued to a device as part of the recall feature due to a busy condition at the intended device.	Recall
Recall - No Answer	The call was queued to a device as part of the recall feature due to a no answer condition at the intended device.	Recall
Recall - Forwarded	The call was queued to a device as part of the recall feature due to a forwarding condition at the intended destination.	Recall
Recall - Resources Not Available	The call was queued to a device as part of the recall feature due to unavailble resources at the intended device.	Recall
Redirected	The call was queued to a device after it was diverted from or deflected to this device.	Deflect Call
Remains in Queue	The call was queued to a device while the calling device's position in the queue is retained. For example, the call could be queued to a VRU or other automated answering equipment while the calling device retains its position in the ACD queue.	ACD, Queuing, Single Step Conference, Join Call
Resources Not Available	The call was queued to a device because resources were not available.	ACD
Trunks Busy	The call was queued to a device because there is no available Network Interface Device (e.g., Trunk, CO line).	External Call

17.2.15.3 Functional Requirements

1. When observing a call or a device in a call, and the call diverts from a device in the call, if the switching function does not provide the Diverted event for all devices in a call or for call-type monitors (as indicated through the capabilities exchange services option), the computing function shall use the queue, calledDevice, lastRedirectionDevice, and cause (eventCause parameter type) parameters to properly track the progress of the call as a result of the redirection. See 6.7.6, "Tracking a Diverted Call", on page 75 for more information.
2. For external incoming calls, the contents of the networkCallingDeviceID and the networkCalledDeviceID parameters shall not change as long as the associatedCallingDevice remains in the call. This differs from the callingDeviceID and the calledDeviceID parameters in that these parameters may change as a result of features such as transfer, forwarding, and conferencing, etc.

© ISO/IEC 2007 – All rights reserved

Copyright International Organization for Standardization
Provided by IHS under license with ISO
No reproduction or networking permitted without license from IHS
Not for Resale

17.2.16 Retrieved

The Retrieved event indicates that a previously held call has been retrieved.

Common situations that generate this event include:

- When a held call is retrieved through the phone using features such as Retrieve, Alternate, etc.
- When a held call is retrieved during the successful execution of the Alternate Call, Reconnect Call, or the Retrieve Call service.

Figure 17-48 Retrieved Event

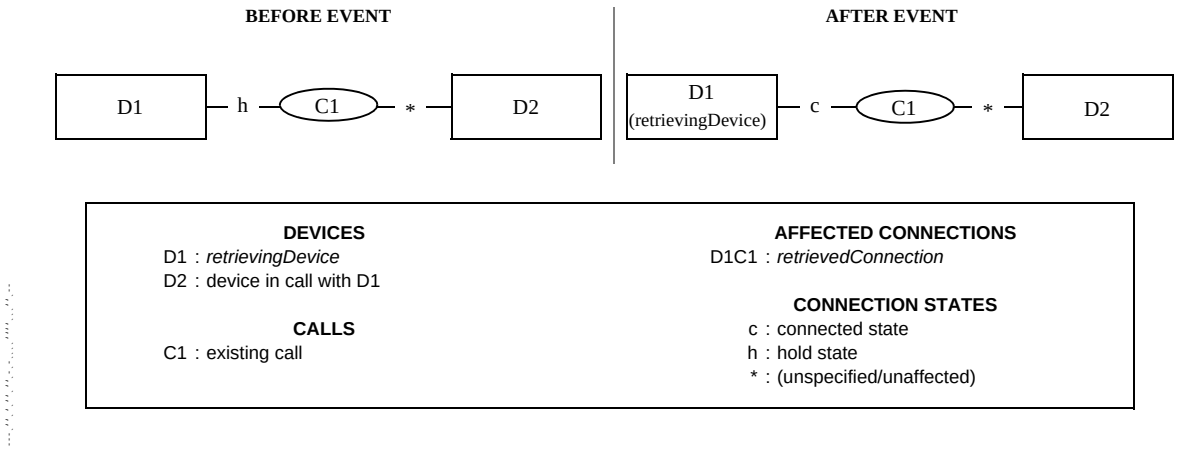

17.2.16.1 Event Parameters

Table 17-174 Retrieved—Event Parameters

Parameter Name	Type	M/ O/C	Description
monitorCrossRefID	MonitorCrossRefID	M	Associates the event to an established monitor.
retrievedConnection	ConnectionID	M	Specifies the connection at which hold was deactivated.
retrievingDevice	SubjectDeviceID	M	Specifies the device at which hold was deactivated.
localConnectionInfo	LocalConnectionState	C	Specifies the local connection state of the device associated with the Monitor Cross Reference ID. The following are the states of the devices in the call. • For the retrieving device: Connected • For the other devices left in the call: (unaffected) This parameter is mandatory for events generated for device-type monitors.
correlatorData	CorrelatorData	O	Specifies the correlator data associated with the call.
cause	EventCause	M	Specifies the reason for the event.
servicesPermitted	ServicesPermitted	C	Specifies a list of the call control services that can be applied to the local connection. This parameter is mandatory if the switching function supports the Dynamic Feature Availability option (as indicated through the capabilities exchange services), otherwise this parameter is optional.
mediaCallCharacteristics	MediaCallCharacteristics	O	Specifies the media class and media characteristics of the call. See 12.2.18, “MediaCallCharacteristics”, on page 130 for the complete description.

© ISO/IEC 2007 – All rights reserved
Copyright International Organization for Standardization
Provided by IHS under license with ISO
No reproduction or networking permitted without license from IHS
Not for Resale

Table 17-174 Retrieved—Event Parameters (continued)

Parameter Name	Type	M/ O/C	Description
callCharacteristics	CallCharacteristics	O	Specifies the high level characteristics (ACD call, Priority call, etc.) associated with the call. See 12.2.4, “CallCharacteristics”, on page 108 for the complete set of possible values.
retrievedConnectionInfo	ConnectionInformation	O	Specifies the connection information associated with the retrievedConnection connection. If this parameter is not present, then the connection information is switching function specific.
callLinkageData	CallLinkageData	O	Specifies the global call data and thread data associated with the call.
languagePreferences	LanguagePreferences	O	Specifies the language preferences associated with the call.
security	CSTASecurityData	O	Specifies timestamp information, message sequence number, and security information.
privateData	CSTAPrivateData	O	Non-standardized information attached to the event.

17.2.16.2 Event Causes

Table 17-175 Retrieved—Event Causes

Event Cause	Description	Associated Features
Alternate	The call was retrieved at a device as part of the alternate feature.	Alternate Call
Network Signal	The call was retrieved at a device that is outside of the switching sub-domain.	External Call
Normal	The call was retrieved at a device (a more specific cause cannot be provided).	Any feature, Alternate Call, Reconnect Call, Retrieve Call
Recall	The call was retrieved at a device because a hold timeout expired.	Recall

17.2.16.3 Functional Requirements

1. This event is only generated for the Alternate feature when the device is alternating between a connection that is in the Connected state and a connection that is in the Hold state. Note that this event shall not be generated when the Alternate feature is used to answer an alerting call (the Established event is generated in this case). Refer to 17.1.2, “Alternate Call”, on page 218 for more information.

17.2.17 Service Initiated

The Service Initiated event indicates that a telephony service has been initiated at a monitored device. The switching function typically generates this event when “dial-tone” is being provided. This event indicates that either a call may be originated or a feature may be invoked. This event also may indicate that a device is prompting a user.

Common situations that generate this event include:

- When a service or feature prompts a user to take a phone off-hook and that phone is not able to do so without manual intervention.
- A Make Call or Consultation Call service has been invoked and the originating device is initiating a new call that is associated with the originating device.

© ISO/IEC 2007 – All rights reserved

Copyright International Organization for Standardization
Provided by IHS under license with ISO
No reproduction or networking permitted without license from IHS
Not for Resale

- When manually invoking any feature at a device for an existing call that requires a new call to be created to input the feature.
- When a device is taken off-hook manually.
- When an incoming call arrives on a monitored Network Interface Device (e.g. trunk, CO line).

Figure 17-49 Service Initiated Event

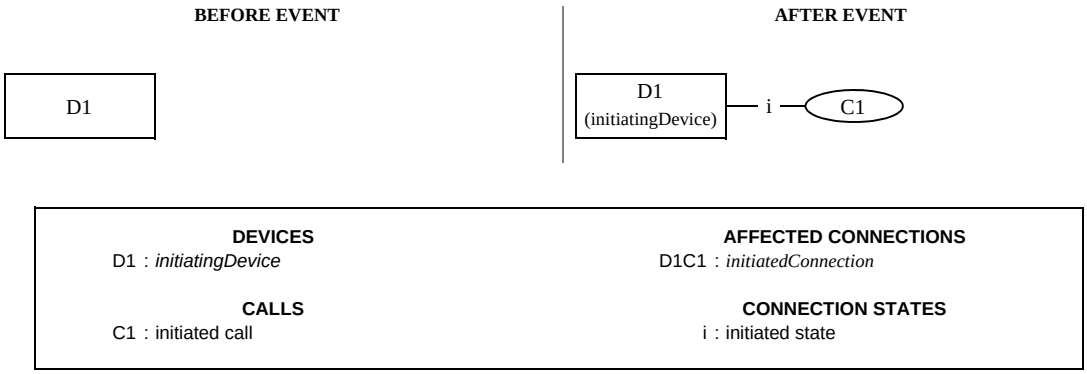

17.2.17.1 Event Parameters

Table 17-176 Service Initiated—Event Parameters

Parameter Name	Type	M/ O/C	Description
monitorCrossRefID	MonitorCrossRefID	M	Associates the event to an established monitor.
initiatedConnection	ConnectionID	M	Specifies the connection at which service was initiated.
initiatingDevice	SubjectDeviceID	M	Specifies the initiating device.
localConnectionInfo	LocalConnectionState	C	Specifies the local connection state of the device associated with the Monitor Cross Reference ID. The following are the states of the devices in the call. • When the device is initiating a service of some form: Initiated This parameter is mandatory for events generated for device-type monitors.
correlatorData	CorrelatorData	C	Specifies the correlator data associated with the call. This parameter is mandatory if there is correlator data associated with the call.
cause	EventCause	M	Specifies the reason for the event.
servicesPermitted	ServicesPermitted	C	Specifies a list of the call control services that can be applied to the local connection. This parameter is mandatory if the switching function supports the Dynamic Feature Availability option (as indicated through the capabilities exchange services), otherwise this parameter is optional.
mediaCallCharacteristics	MediaCallCharacteristics	O	Specifies the media class and media characteristics of the call. See 12.2.18, “MediaCallCharacteristics”, on page 130 for the complete description.
callCharacteristics	CallCharacteristics	O	Specifies the high level characteristics (ACD call, Priority call, etc.) associated with the call. See 12.2.4, “CallCharacteristics”, on page 108 for the complete set of possible values.

--`,,```,,,,````-`-`,,`,,`,`,,`---
© ISO/IEC 2007 – All rights reserved
Copyright International Organization for Standardization
Provided by IHS under license with ISO
No reproduction or networking permitted without license from IHS
Not for Resale

Table 17-176 Service Initiated—Event Parameters (continued)

Parameter Name	Type	M/ O/C	Description
initiatedConnectionInfo	ConnectionInformation	O	Specifies the connection information associated with the initiatedConnection connection. If this parameter is not present, then the connection information is switching function specific.
networkCallingDevice	NetworkCallingDeviceID	O	Specifies the original calling device information provided by the network for external incoming calls. This parameter is provided only for external incoming calls.
networkCalledDevice	NetworkCalledDeviceID	O	Specifies the original called device information provided by the network for external incoming calls. This parameter is provided only for external incoming calls.
associatedCallingDevice	AssociatedCallingDeviceID	C	Specifies the Network Interface Device associated with the calling device if the call is an external incoming call. This parameter is mandatory for all external incoming calls and shall not be provided otherwise.
callLinkageData	CallLinkageData	C	Specifies the global call data and thread data associated with the call. This parameter is mandatory if the switching function supports the call linkage feature otherwise it shall not be provided.
subjectOfCall	SubjectOfCall	O	Specifies the subject/intent of the call. This could represent the subject header of an Email (text call) or intent for a voice call, for example.
messageInfo	MessageInfo	O	Specifies the contents of message information associated with a call. The message information consists of one of more items.
languagePreferences	LanguagePreferences	O	Specifies the language preferences associated with the call.
security	CSTASecurityData	O	Specifies timestamp information, message sequence number, and security information.
privateData	CSTAPrivateData	O	Non-standardized information attached to the event.

17.2.17.2 Event Causes

Table 17-177 Service Initiated—Event Causes

Event Cause	Description	Associated Features
Active Participation	The telephony service was initiated at a device and the device is being prompted to go off-hook.	Join Call with a participationType of Active (prompting)
Call Back	The telephony service was initiated at a device and the device is being prompted to go off-hook because of a previously set call back feature.	Call Back Call-Related, Call Back Non-Call-Related
Call Pickup	The telephony service was initiated at a device and the device is being prompted to go off-hook.	Directed Pickup, Group Pickup (prompting)
Conference	The telephony service was initiated at a device as part of a consultation with the intended purpose of establishing a conference.	Consultation Call with a consultOptions of ConferenceOnly
Consultation	The telephony service was initiated at a device as part of a consultation.	Consultation Call
Join Call	The telephony service was initiated at a device and the device is being prompted to go off-hook.	Join Call (prompting)
Make Call	The telephony service was initiated at a device and the device is being prompted to go off-hook.	Make Call (prompting)

© ISO/IEC 2007 – All rights reserved

Copyright International Organization for Standardization
Provided by IHS under license with ISO
No reproduction or networking permitted without license from IHS
Not for Resale

Table 17-177 Service Initiated—Event Causes (continued)

Event Cause	Description	Associated Features
Make Predictive call	The telephony service was initiated at a (calling) device prior to call activity at a called device as part of a predictive call feature.	Make Predictive Call
New Call	The telephony service was initiated for establishing a connection with another device.	Any feature, Make Call
Normal	A more specific cause cannot be provided.	Any feature
Reserved	A device was reserved prior to call delivery.	Make Predictive Call, incoming call
Silent Participation	The telephony service was initiated at a device and the device is being prompted to go off-hook.	Join Call with a participationType of Silent (prompting)
Transfer	The telephony service was initiated at a device as part of a consultation for the purpose of transferring a call.	Consultation Call with a consultOptions of TransferOnly

17.2.17.3 Functional Requirements

1. Some CSTA services (Make Call, Call Back, Pickup, Join Call) may require to prompt the user of the targeted device in order to take that device off-hook. In this case a Service Initiated event is generated containing the appropriate cause code (Make Call, Call Back, Call Pickup, Join Call). The implementation of this prompting mechanism is switching function specific (display flashing, ring pattern, lamp blinking, etc.).
2. It is switching function dependent as to whether this event is provided to the computing function. For those switching functions that cannot detect prompting, or a device going off-hook and being provided dialtone, the first event seen by the computing function, for the calling device, will be the Originated event.
3. When prompting a call appearance, bridged, or hybrid device configuration as a result of a Make Call service request, only one of the appearances (initiatedConnection) will be prompted.
4. When prompting a call appearance, bridged, or hybrid device configuration as a result of a Call Back service request or Recall feature, only the appearance (initiatedConnection) that issued the Call Back service request or that was the Recall device, will be prompted.
5. For an external incoming call, this event is generated at the Network Interface Device (when this device can have monitoring applied to it).
6. It is not required to send the Service Initiated event for functional (e.g. en-bloc BRI) terminals nor is it required to be sent for calls that are set up without receiving dial tone or other prompting, like CSTA calls initiated with the Make Call service from a hands-free telephone.

17.2.18 Transferred

The Transferred event indicates that an existing call has been transferred to another device and the transferring device has been dropped from the call. The transferring device does not appear in any future events for the call.

Common situations that generate this event include:

- Two step transferring situations (manual and service initiated).
- Single step transferring situations (manual and service initiated).

© ISO/IEC 2007 – All rights reserved

Copyright International Organization for Standardization
Provided by IHS under license with ISO
No reproduction or networking permitted without license from IHS
Not for Resale

Figure 17-50 Transferred Event (Case A: Two Step Transfer)

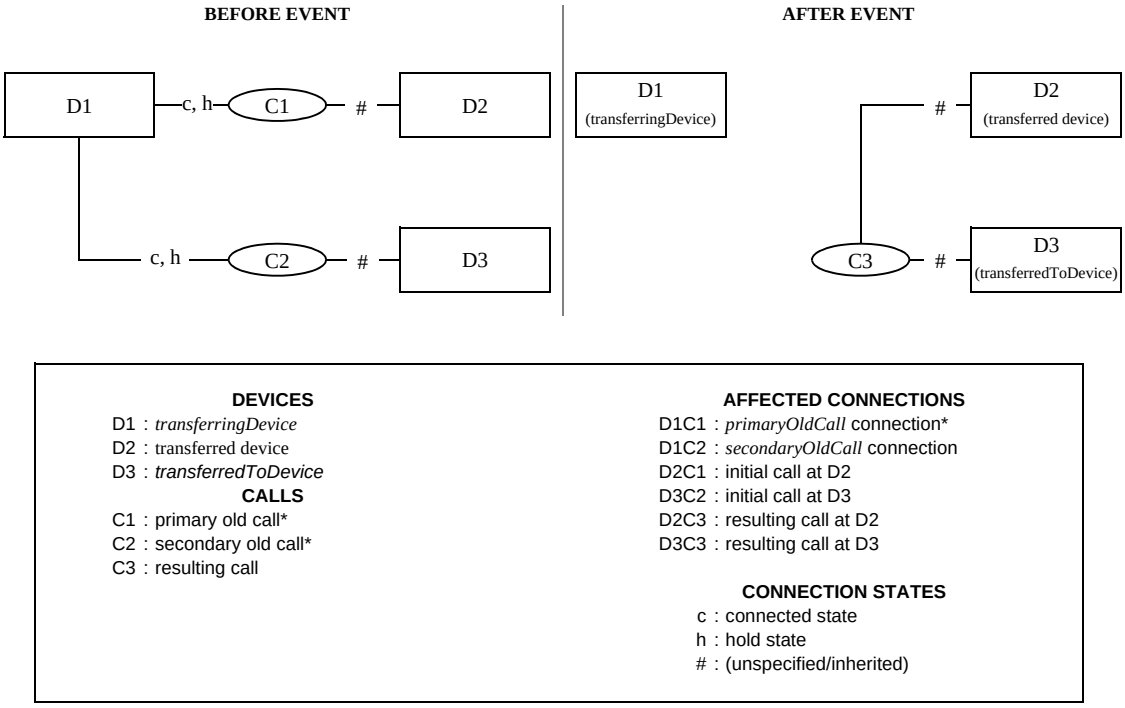

* the primary/secondary old call and the primary/secondary old call connections mentioned in this figure are from the perspective of the transferringDevice (D1). See Functional Requirement #1.

Figure 17-51 Transferred Event (Case B: Single Step Transfer)

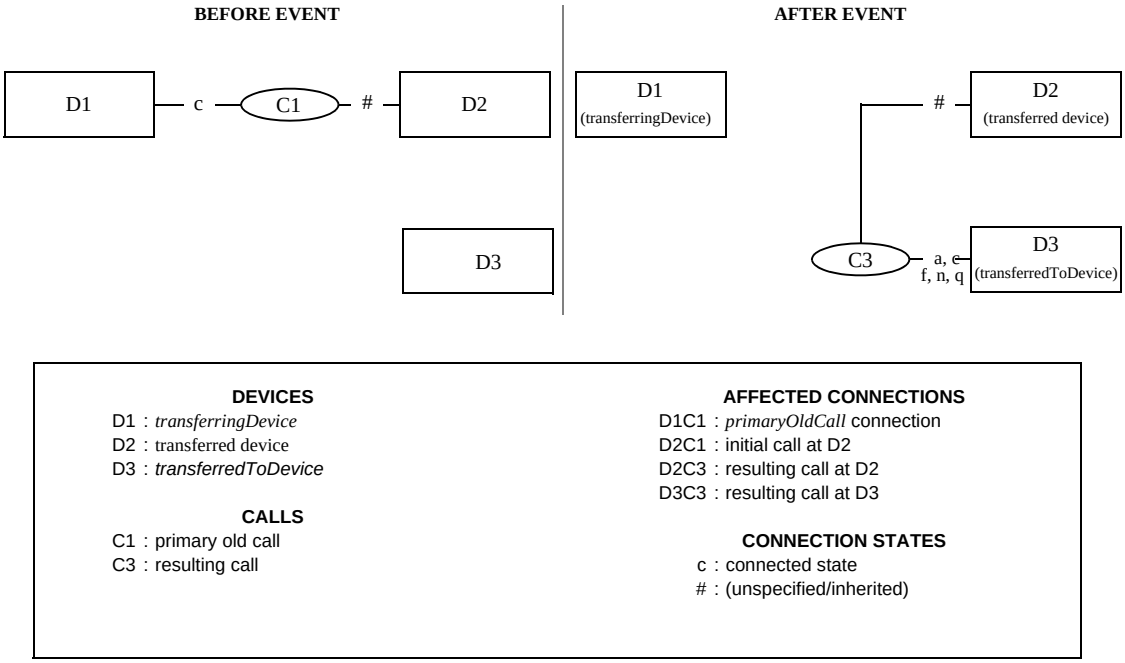

© ISO/IEC 2007 – All rights reserved

Copyright International Organization for Standardization
Provided by IHS under license with ISO
No reproduction or networking permitted without license from IHS
Not for Resale

17.2.18.1 Event Parameters

Table 17-178 Transferred—Event Parameters

Parameter Name	Type	M/ O/C	Description
monitorCrossRefID	MonitorCrossRefID	M	Associates the event to an established monitor.
primaryOldCall	ConnectionID	M	Specifies the connection of the primary call. See Functional Requirement #1.
secondaryOldCall	ConnectionID	C	Specifies the connection of the secondary call. If the switching function supports the “fixed-view” option (as indicated by the capability exchange services), this parameter is mandatory. If the switching function supports the “local-view” option, this parameter is mandatory if there are two known calls involved with the transfer (before the transfer is created) from the perspective of the monitored device, otherwise it shall not be provided. See Functional Requirement #1.
transferringDevice	SubjectDeviceID [a]	M	Specifies the device that transferred the call.
transferredToDevice	SubjectDeviceID [a]	M	Specifies the transferred to device.
transferredConnections	ConnectionList	M	Specifies information on each device/ConnectionID in the resulting transferred call that are known by the switching function.
localConnectionInfo	LocalConnectionState	C	Specifies the local connection state of the device associated with the Monitor Cross Reference ID. The following are the states of the devices in the call. • For the transferring device (any Connection IDs associated with the transfer, i.e., this event should be used for both single and multi-step transfers.): Null • For the other devices associated with the transfer: (unaffected) This parameter is mandatory for events generated for device-type monitors.
correlatorData	CorrelatorData	C	Specifies the correlator data associated with the call. This parameter is mandatory if there is correlator data associated with the call and shall otherwise not be provided.
userData	UserData	C	Specifies user information that is related to the call. This parameter is mandatory if user data is sent and the parameter is supported, otherwise it shall not be included.
chargingInfo	ChargingInfo	O	Specifies a total value of charging or currency units for the device that transferred the call.
cause	EventCause	M	Specifies the reason for the event.
servicesPermitted	ServicesPermitted	C	Specifies a list of the call control services that can be applied to the local connection. This parameter is mandatory if the switching function supports the Dynamic Feature Availability option (as indicated through the capabilities exchange services), otherwise this parameter is optional.
mediaCallCharacteristics	MediaCallCharacteristics	O	Specifies the media class and media characteristics of the call. See 12.2.18, “MediaCallCharacteristics”, on page 130 for the complete description.

© ISO/IEC 2007 – All rights reserved

Copyright International Organization for Standardization
Provided by IHS under license with ISO
No reproduction or networking permitted without license from IHS
Not for Resale

Table 17-178 Transferred—Event Parameters (continued)

Parameter Name	Type	M/ O/C	Description
callCharacteristics	CallCharacteristics	O	Specifies the high level characteristics (ACD call, Priority call, etc.) associated with the call. See 12.2.4, “CallCharacteristics”, on page 108 for the complete set of possible values.
callLinkageDataList	List	C	Specifies the global call data and thread data associated with the call. This parameter is mandatory if the switching function supports the call linkage feature otherwise it shall not be provided. The parameter consists of the following components: • newCallLinkageData (M) CallLinkageData - specifies the call linkage data associated with the resulting call. • oldCallLinkageData (M) CallLinkageData - specifies the call linkage data that was discarded as the result of the transfer.
languagePreferences	LanguagePreferences	O	Specifies the language preferences associated with the call.
deviceHistory	DeviceHistory	O	Specifies the list of devices which were previously associated with the call (e.g. redirecting, transferring, clearing devices).
security	CSTASecurityData	O	Specifies timestamp information, message sequence number, and security information.
privateData	CSTAPrivateData	O	Non-standardized information attached to the event.

a. Note that SubjectDeviceID refers to a parameter type—not the subject device of the Transferred event. This parameter type is used to represent the two devices in this event because the two devices are affected by the generation of this event (i.e., the transferring device and the transferred device). However, there is only one subject device of the event and that is the transferring device. For more details on the SubjectDeviceID parameter type, see 12.3.30, “SubjectDeviceID”, on page 148.

17.2.18.2 Event Causes

Table 17-179 Transferred—Event Causes

Event Cause	Description	Associated Features
Network Signal	The call was involved in a transfer located outside of the switching sub-domain.	External Call
Normal	The call was transferred (a more specific event cause cannot be provided).	Transfer
Path Replacement	The call was transferred due to optimization of network (NID) resources.	Network feature
Single Step Transfer	The call was transferred because of a single step transfer.	Single Step Transfer Call
Transfer	The call was transferred because of a two step transfer.	Transfer Call, Two Step Transfer

17.2.18.3 Functional Requirements

1. The contents of the primaryOldCall and the secondaryOldCall parameters may contain either a “fixed view” or a “local view” of the connections at a device before the transfer has been completed. The switching function indicates which view it provides via the connectionView parameter in the capability exchange services.

© ISO/IEC 2007 – All rights reserved

Copyright International Organization for Standardization
Provided by IHS under license with ISO
No reproduction or networking permitted without license from IHS
Not for Resale

- fixed view - for each transferred event generated by monitors placed on different devices in a call, the switching function provides the same information in the primaryOldCall and the secondaryOldCall parameters independent of the monitorType (call or device-type monitor) and independent of the role of the device in the conference (conferencingDevice, addedParty, etc.). The meaning of these parameters for the fixed-view are:
  - primaryOldCall - specifies the first call visible at the transferringDevice.
  - secondaryOldCall - specifies the second call visible at the transferringDevice.
- local view - for each transferred event generated by monitors placed on different devices in a call, the switching function provides different information in the primaryOldCall and the secondaryOldCall parameters that depends upon which call was made visible first, from the perspective of the monitored device. The meaning of these parameters for the local-view are:
  - primaryOldCall - specifies the first call visible at the monitored device. For example, for a device-type monitor placed on the transferringDevice (two step transfer), this is the first call placed on hold (C1). For a device-type monitor placed on the transferredTo device, this is the first (and only) call involved in call C2 from the perspective of the monitored device.
  - secondaryOldCall - specifies the second call visible at the monitored device. For example, for a device-type monitor placed on the transferringDevice (two step transfer), this is call C2. For a monitor placed on the transferredTo device, there is no secondaryOldCall parameter.

2. The transferredConnections parameter is a list that contains the new ConnectionID, old ConnectionID, DeviceID (values such as ANI, etc.), and for externally located devices the associated Network Interface DeviceID. Refer to 12.2.9, “ConnectionList”, on page 112, for a description of which components are optional and mandatory.
3. The computing function should never assume the reuse of callIDs, although some switching functions may reuse one or the other.

18 Call Associated Features

This clause describes call associated (non-Call Control related) features including:

- Call Associated Feature services
- Call Associated Feature events

Refer to 6.1.2, “Call”, on page 42 and 6.1.3, “Connection”, on page 49 for information on the identifiers used to reference calls and connections.

18.1 Services

Table 18-1 Call Associated Feature Services Summary

Call Associated Feature Service	Description	Pg.
18.1.1 Associate Data	Associates information (such as correlator data, account code, authorisation code, call qualifying data, language preference, etc.) with a specified call.	367
18.1.2 Cancel Telephony Tones	Cancels a telephony tone that is being generated on a specified connection.	369
18.1.3 Change Connection Information	Changes the connection information associated with the connection.	370
18.1.4 Generate Digits	Generates DTMF or rotary digits on behalf of a connection in a call.	373
18.1.5 Generate Telephony Tones	Generates a specified telephony tone on behalf of a connection in a call.	375
18.1.6 Send User Information	Sends user-to-user information from a specified connection in a call.	377

© ISO/IEC 2007 – All rights reserved
Copyright International Organization for Standardization
Provided by IHS under license with ISO
No reproduction or networking permitted without license from IHS
Not for Resale

18.1.1 Associate Data

C ⟶ S

The Associate Data service associates computing function information (such as correlator data, account code, authorization code, call qualifying data, call characteristics, subject of call, language preferences, etc.) with a specified call.

This service does not affect the state or progress of a call.

Figure 18-1 Associate Data Service

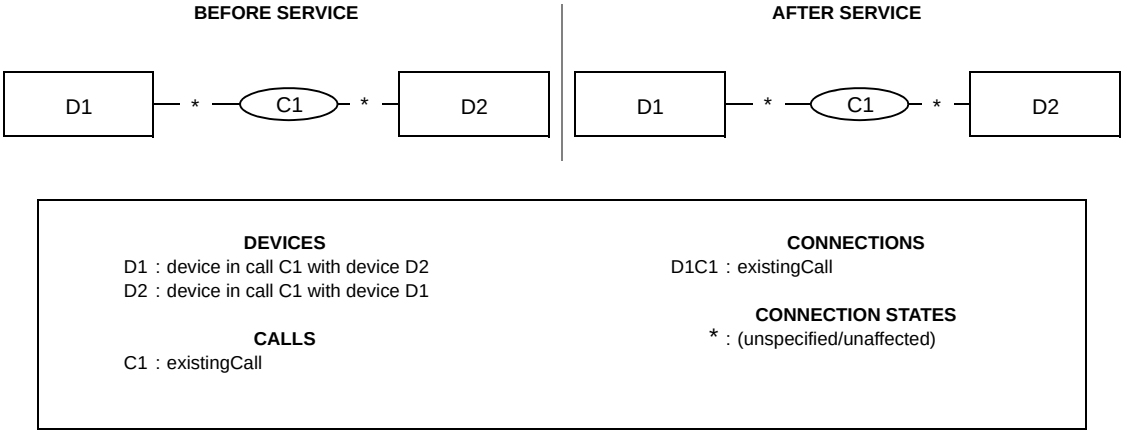

Note that the existingCall connectionID could either be the D1C1 or the D2C1 connections in Figure 18-1.

18.1.1.1 Service Request

Table 18-2 Associate Data—Service Request

Parameter Name	Type	M/ O/C	Description
existingCall	ConnectionID	M	Specifies the call with which the information is to be associated.
accountCode [a]	AccountInfo	C	Specifies the account code to associate with the call.
authCode [a]	AuthCode	C	Specifies the authorization code to allow the call.
correlatorData [a]	CorrelatorData	C	Specifies the correlator data to associate with the call.
callQualifyingData [a]	CallQualifyingData	C	Specifies the call qualifying data (wrap code, walk away code, etc.) to associate with the call.
callCharacteristics [a]	CallCharacteristics	C	Specifies the high level characteristics (ACD call, Priority call, etc.) to associate with the call. See 12.2.4 for the complete set of possible values.
subjectOfCall [a]	SubjectOfCall	C	Specifies the subject/intent to associate with the call.
languagePreferences [a]	LanguagePreferences	C	Specifies the language preferences to associate with the call.
deviceInfo	DeviceID	C	Specifies the device information (e.g. name) to be associated with the specified connection.
security	CSTASecurityData	O	Specifies timestamp information, message sequence number, and security information.
privateData	CSTAPrivateData	O	Specifies non-standardized information.

a. At least one of these parameters shall be specified on this service (see Functional Requirement #1).

© ISO/IEC 2007 – All rights reserved

Copyright International Organization for Standardization
Provided by IHS under license with ISO
No reproduction or networking permitted without license from IHS
Not for Resale

18.1.1.2 Service Response

The capability exchange services describe the type of acknowledgement model (atomic or multi-step) that the switching function supports for this service request.

18.1.1.2.1 Positive Acknowledgement

Table 18-3 Associate Data—Positive Acknowledgement

Parameter Name	Type	M/ O/C	Description
security	CSTASecurityData	O	Specifies timestamp information, message sequence number, and security information.
privateData	CSTAPrivateData	O	Specifies non-standardized information.

18.1.1.2.2 Negative Acknowledgement

The negative acknowledgement error codes are described in 12.2.14, “ErrorValue”, on page 115.

18.1.1.3 Operational Model

18.1.1.3.1 Connection State Transitions

There are no connection state changes due to this service.

18.1.1.3.2 Device-Type Monitoring Event Sequences

Table 18-4 Associate Data—Device-Type Monitoring Event Sequences

Monitored Device	Connection	Event
D1	D1C1	Call Information
D2	D2C1	Call Information

18.1.1.3.3 Call-Type Monitoring Event Sequences

Table 18-5 Associate Data—Call-Type Monitoring Event Sequences

Monitored Call	Connection	Event
C1	D1C1/D2C1	Call Information

18.1.1.3.4 Functional Requirements

1. At least one of the service specific parameters (accountCode, authCode, correlatorData, callQualifyingData, callCharacteristics, subjectOfCall, languagePreferences) shall be provided in the service request, otherwise the service shall be rejected.
2. The Call Information event is generated as the result of this service.
3. For a complete description of the behaviour of correlator data, refer to 6.1.2.3, “Correlator Data”, on page 43.
4. When either the accountCode or callQualifyingData parameter is provided on the service request, the callID component of the connectionID in the service request may be omitted or may refer to the connectionID that no longer exists at the device. This may occur when a user enters a wrap code for a call that has just cleared, for example. It is switching function specific (as indicated by the capability

 --`,,```,,,,````-`-`,,`,,`,`,,`---
© ISO/IEC 2007 – All rights reserved
Copyright International Organization for Standardization
Provided by IHS under license with ISO
No reproduction or networking permitted without license from IHS
Not for Resale

exchange services) whether the switching function rejects the service (with an invalid connectionID) or accepts the service under this condition.

5. When accountInfo, authorisationCode, or callQualifyingData is provided, the ConnectionID in the service request shall be related to the device on whose behalf the data is being associated.

6. An application may use the deviceInfo parameter to update or replace information associated with a device in a call. This may be used, for example, to associate a person's name or SIP URI to a device in a call.

18.1.2 Cancel Telephony Tones

C → S

The Cancel Telephony Tones service cancels a telephony tone that is being sent on a connection by the Generate Telephony Tones service.

This service does not affect the state or progress of a call.

Figure 18-2 Cancel Telephony Tones Service

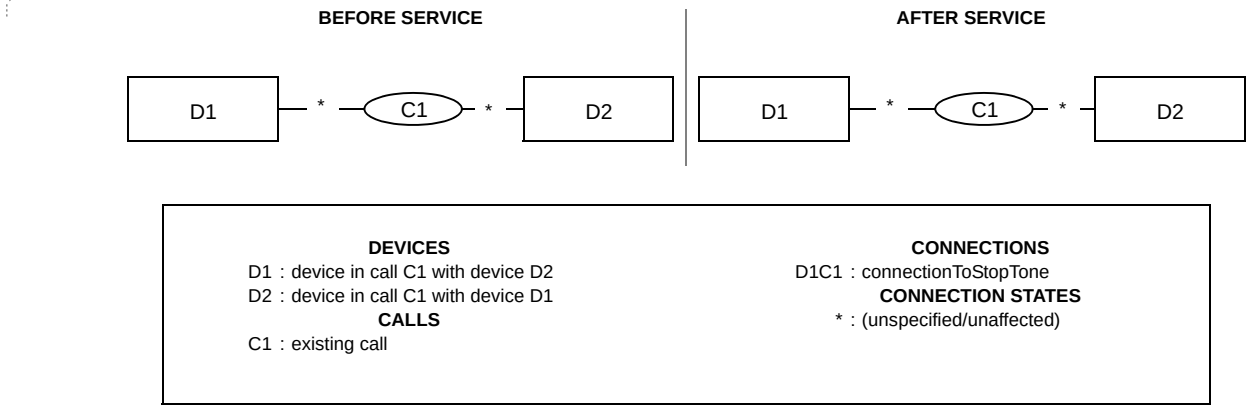

18.1.2.1 Service Request

Table 18-6 Cancel Telephony Tones—Service Request

Parameter Name	Type	M/ O/C	Description
connectionToStopTone	ConnectionID	M	Connection on which the tones are being generated.
security	CSTASecurityData	O	Specifies timestamp information, message sequence number, and security information.
privateData	CSTAPrivateData	O	Specifies non-standardized information.

18.1.2.2 Service Response

The capability exchange services describe the type of acknowledgement model (atomic or multi-step) that the switching function supports for this service request.

© ISO/IEC 2007 – All rights reserved

Copyright International Organization for Standardization
Provided by IHS under license with ISO
No reproduction or networking permitted without license from IHS
Not for Resale

18.1.2.2.1 Positive Acknowledgement

Table 18-7 Cancel Telephony Tones—Positive Acknowledgement

Parameter Name	Type	M/ O/C	Description
security	CSTASecurityData	O	Specifies timestamp information, message sequence number, and security information.
privateData	CSTAPrivateData	O	Specifies non-standardized information.

18.1.2.2.2 Negative Acknowledgement

The negative acknowledgement error codes are described in 12.2.14, “ErrorValue”, on page 115.

18.1.2.3 Operational Model

18.1.2.3.1 Connection State Transitions

There are no connection state changes due to this service.

18.1.2.3.2 Device-Type Monitoring Event Sequences

Table 18-8 Cancel Telephony Tones—Device-Type Monitoring Event Sequences

Monitored Device	Connection	Event
D1 (device in call C1 with device D2)	D1C1 (connectionToStopTone)	Telephony Tones Generated (with the toneGenerated parameter not provided)

18.1.2.3.3 Call-Type Monitoring Event Sequences

Table 18-9 Cancel Telephony Tones—Call-Type Monitoring Event Sequences

Monitored Call	Connection	Event
C1 (existingCall)	D1C1 (connectionToStopTone)	Telephony Tones Generated (with the toneGenerated parameter not provided)

18.1.2.3.4 Functional Requirements

None.

18.1.3 Change Connection Information

C ⟶ S

The Change Connection Information service allows an application to change the connection information associated with a specified connection.

The connection information consists of:

- flowDirection (i.e., participation type)
- number of media channels
- media session information.(e.g. SIP Sesion Description Protocol (SDP) information)

This service does not affect the connection state or progress of a call.

© ISO/IEC 2007 – All rights reserved

Copyright International Organization for Standardization
Provided by IHS under license with ISO
No reproduction or networking permitted without license from IHS
Not for Resale

Figure 18-3 Change Connection Information Service

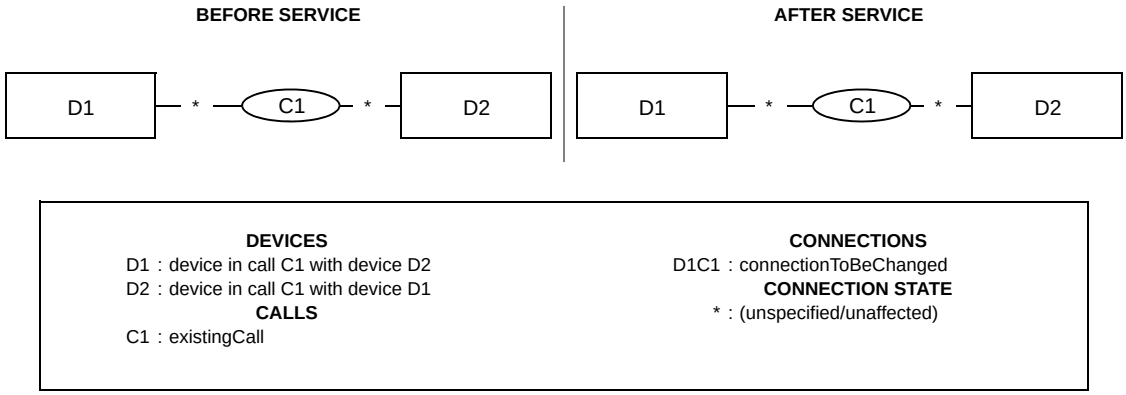

Note that the existingCall connectionID could either be the D1C1 or the D2C1 connections in the above figure.

18.1.3.1 Service Request

Table 18-10 Change Connection Information—Service Request

Parameter Name	Type	M/ O/C	Description
connectionToBeChanged	ConnectionID	M	Specifies the connectionID whose connection information is to be changed.
requestedConnectionInfo	ConnectionInformation	M	Specifies the requested connection information. This information includes the flow direction (i.e., participation type, number of channels, and the media session information (e.g., SDP information). See 12.2.8, “ConnectionInformation”, on page 111 for more information.
security	CSTASecurityData	O	Specifies timestamp information, message sequence number, and security information.
privateData	CSTAPrivateData	O	Specifies non-standardized information.

18.1.3.2 Service Response

This service follows the atomic acknowledgement model for this service request.

18.1.3.2.1 Positive Acknowledgement

Table 18-11 Change Connection Information—Positive Acknowledgement

Parameter Name	Type	M/ O/C	Description
actualConnectionInfo	ConnectionInformation	M	Specifies the actual connection information that will be associated with the connection. The actualConnectionInfo may differ from the requestedConnectionInfo parameter in the service request (See Functional Requirement #2).
security	CSTASecurityData	O	Specifies timestamp information, message sequence number, and security information.
privateData	CSTAPrivateData	O	Specifies non-standardized information.

© ISO/IEC 2007 – All rights reserved

Copyright International Organization for Standardization
Provided by IHS under license with ISO
No reproduction or networking permitted without license from IHS
Not for Resale

18.1.3.2.2 Negative Acknowledgement

The negative acknowledgement error codes are described in 12.2.14, “ErrorValue”, on page 115.

18.1.3.3 Operational Model

18.1.3.3.1 Connection State Transitions

There are no connection state changes due to this service.

18.1.3.3.2 Device-Type Monitoring Event Sequences

Table 18-12 Change Connection Information—Device-Type Monitoring Event Sequences

Monitored Device	Connection	Event
D1	D1C1	Call Information (with the connectionInfo parameter)
D2	D1C1	Call Information (with the connectionInfo parameter)

18.1.3.3.3 Call-Type Monitoring Event Sequences

Table 18-13 Change Connection Information—Call-Type Monitoring Event Sequences

Monitored Call	Connection	Event
C1	D1C1	Call Information (with the connectionInfo parameter)

18.1.3.3.4 Functional Requirements

1. This service allows the application to change the connection information after a connection has already been created. This can be used to control media flow (transmit and receive media flow direction) associated with a connection. For example a user at a device may be participating in a voice call as listen only (flowDirection is “Receive”) meaning that the user can only hear and not contribute media into the call (i.e. silent monitoring). The application can use the Change Connection Information service to change the flowDirection associated with its connection to “TransmitAndReceive” to enable the user to both listen and speak in the call.
2. In some cases the connection information cannot be changed to the specific information as requested in the service request. If the service request results in no changes to the connection information, a negative acknowledgement should be provided. If the connection information has changed as a result of the service, either partially or completely, a positive response should be provided with the actual connection information provided in the actualConnectionInfo parameter.
3. There are several ways to control the participation type (i.e., media flow direction) associated with a connection:
   - When a new connection is created with certain CSTA services (e.g., Consultation Call, Make Call), the connection information can be specified in the service request via the connectionInformation parameter.
   - When a device is added to an existing call (e.g., Intrude Call, Join Call, Single Step Conference), the participationType parameter can be specified in the service request.
   - Once a connection has been created, the Change Connection Information service can be used to change the media flow direction.

© ISO/IEC 2007 – All rights reserved

Copyright International Organization for Standardization
Provided by IHS under license with ISO
No reproduction or networking permitted without license from IHS
Not for Resale

18.1.4 Generate Digits

C ⟶ S

The Generate Digits service causes a series of digits to be sent on behalf of a connection in a call. The digits may be sent in the form of DTMF tones or rotary pulses. This service also supports optional parameters to control digit generation.

This service is used for generating end-to-end information that is to be sent to a device in a call (i.e., not to address/select a device).

This service does not affect the state or progress of a call.

Figure 18-4 Generate Digits Service

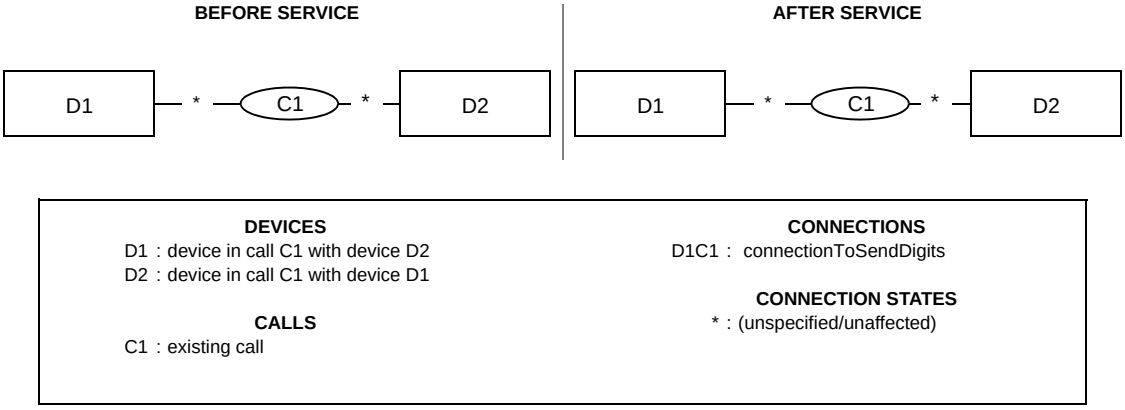

18.1.4.1 Service Request

Table 18-14 Generate Digits—Service Request

Parameter Name	Type	M/ O/C	Description
connectionToSendDigits	ConnectionID	M	Connection of the device which is generating the digits for the call.
digitMode	Enumerated	O	Specifies the signalling format. The complete set of possible values is: • rotaryPulse - rotary signalling. • DTMF - DTMF signalling (default).
charactersToSend	Characters (64)	M	Specifies the string of characters to send. Shall consist of the following set: • For rotary digits: 0, 1, 2, 3, 4, 5, 6, 7, 8, 9, A, B, C, D • For DTMF digits: 0, 1, 2, 3, 4, 5, 6, 7, 8, 9, *, #, A, B, C, D A comma “,” may be included in the parameter string to indicate a pause between characters. The length of the pause is switching function specific and may be determined using the capabilities exchange services. This parameter type is a character string. The maximum length supported by the switching function is provided via the capabilities exchange services.
toneDuration	Value	O	Specifies the duration, in milliseconds, of each tone to be provided (valid for DTMF digitMode only).
pulseRate	Value	O	Specifies the number of pulses per second (valid for rotaryPulse digitMode only).

© ISO/IEC 2007 – All rights reserved

Copyright International Organization for Standardization
Provided by IHS under license with ISO
No reproduction or networking permitted without license from IHS
Not for Resale

Table 18-14 Generate Digits—Service Request (continued)

Parameter Name	Type	M/ O/C	Description
pauseDuration	Value	O	Specifies the duration, in milliseconds, of the silences between the digits (interdigit delay).
security	CSTASecurityData	O	Specifies timestamp information, message sequence number, and security information.
privateData	CSTAPrivateData	O	Specifies non-standardized information.

18.1.4.2 Service Response

The capability exchange services describe the type of acknowledgement model (atomic or multi-step) that the switching function supports for this service request.

18.1.4.2.1 Positive Acknowledgement

Table 18-15 Generate Digits—Positive Acknowledgement

Parameter Name	Type	M/ O/C	Description
security	CSTASecurityData	O	Specifies timestamp information, message sequence number, and security information.
privateData	CSTAPrivateData	O	Specifies non-standardized information.

Note that the positive acknowledgement does not necessarily mean that the charactersToSend have been successfully received by a device in the call.

18.1.4.2.2 Negative Acknowledgement

The negative acknowledgement error codes are described in 12.2.14, “ErrorValue”, on page 115.

18.1.4.3 Operational Model

18.1.4.3.1 Connection State Transitions

There are no connection state changes due to this service.

18.1.4.3.2 Device-Type Monitoring Event Sequences

Table 18-16 Generate Digits—Device-Type Monitoring Event Sequences

Monitored Device	Connection	Event
D1	D1C1 (connectionToSendDigits)	Digits Generated

18.1.4.3.3 Call-Type Monitoring Event Sequences

Table 18-17 Generate Digits—Call-Type Monitoring Event Sequences

Monitored Call	Connection	Event
C1 (existingCall)	D1C1 (connectionToSendDigits)	Digits Generated

© ISO/IEC 2007 – All rights reserved

Copyright International Organization for Standardization
Provided by IHS under license with ISO
No reproduction or networking permitted without license from IHS
Not for Resale

18.1.4.3.4 Functional Requirements

1. This service is used for end-to-end signalling purposes. This service shall not be used to perform dialling sequences (the Dial Digits service shall be used to perform this function).
2. The charactersToSend parameter may contain additional non-standardised characters. Handling of the additional characters is switching function dependent.
3. If the toneDuration or pulseRate parameters in the service request are not present or if they are present but cannot be satisfied, the switching function may use its default value.
4. A Generate Digits service request may be rejected if there is already a switching function generated tone (busy, music, ringback, etc.) on the call.
5. If a Generate Digits service request is received by the switching function while a previous Generate Digits service request has not yet been completed, the new request may or may not be rejected but in any case the digits shall not be interleaved or overlaid.

18.1.5 Generate Telephony Tones

C ⟶ S

The Generate Telephony Tones service causes a telephony tone such as a beep, busy, or ringback to be sent on behalf of a connection in a call. This service also supports optional parameters to control tone generation.

This service does not affect the state or progress of a call.

Figure 18-5 Generate Telephony Tones Service

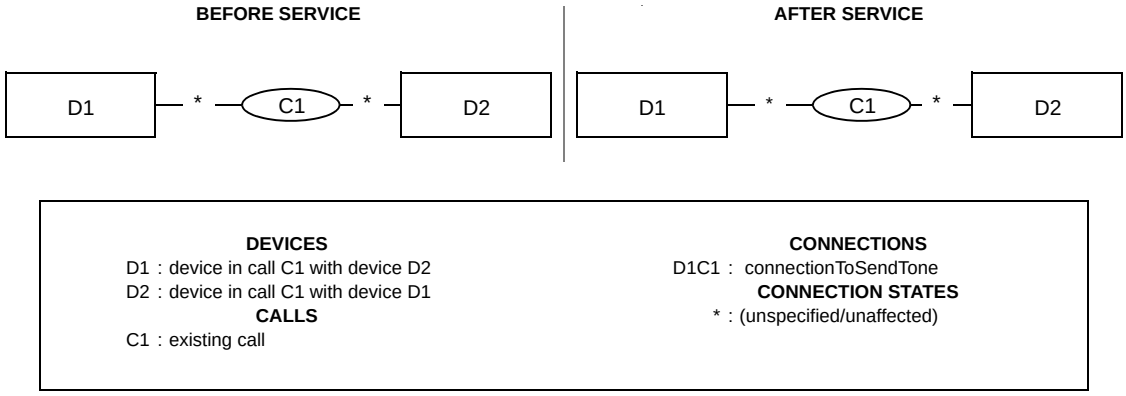

18.1.5.1 Service Request

Table 18-18 Generate Telephony Tones—Service Request

Parameter Name	Type	M/ O/C	Description
connectionToSendTone	ConnectionID	M	Connection of the device which is generating the telephony tones for the call

© ISO/IEC 2007 – All rights reserved

Copyright International Organization for Standardization
Provided by IHS under license with ISO
No reproduction or networking permitted without license from IHS
Not for Resale

Table 18-18 Generate Telephony Tones—Service Request (continued)

Parameter Name	Type	M/ O/C	Description
toneToSend	Enumerated	M	Specifies the tone to send. The complete set of possible values is: • beep • billing • busy • carrier • confirmation • dial • faxCNG • hold • howler • intrusion • modemCNG • park • record warning (indicates call may be being recorded) • reorder • ringback • silence • SIT VC • SIT IC • SIT RO • SIT NC • SwitchSpecified0 through SwitchSpecified100 - reserved for switch specified tones.
toneDuration	Value	O	Specifies the total length in milliseconds of the tones to be provided. A value of 0 indicates that the tone should be continuous.
security	CSTASecurityData	O	Specifies timestamp information, message sequence number, and security information.
privateData	CSTAPrivateData	O	Specifies non-standardized information.

18.1.5.2 Service Response

The capability exchange services describe the type of acknowledgement model (atomic or multi-step) that the switching function supports for this service request.

18.1.5.2.1 Positive Acknowledgement

Table 18-19 Generate Telephony Tones—Positive Acknowledgement

Parameter Name	Type	M/ O/C	Description
security	CSTASecurityData	O	Specifies timestamp information, message sequence number, and security information.
privateData	CSTAPrivateData	O	Specifies non-standardized information.

Note that the positive acknowledgement indicates that the requested tone is successfully being presented.

© ISO/IEC 2007 – All rights reserved

Copyright International Organization for Standardization
Provided by IHS under license with ISO
No reproduction or networking permitted without license from IHS
Not for Resale

18.1.5.2.2 Negative Acknowledgement

The negative acknowledgement error codes are described in 12.2.14, “ErrorValue”, on page 115.

18.1.5.3 Operational Model

18.1.5.3.1 Connection State Transitions

There are no connection state changes due to this service.

18.1.5.3.2 Device-Type Monitoring Event Sequences

Table 18-20 Generate Telephony Tones—Device-Type Monitoring Event Sequences

Monitored Device	Connection	Event
D1	D1C1 (connectionToSendTone)	Telephony Tones Generated

18.1.5.3.3 Call-Type Monitoring Event Sequences

Table 18-21 Generate Telephony Tones—Call-Type Monitoring Event Sequences

Monitored Call	Connection	Event
C1 (existingCall)	D1C1 (connectionToSendTone)	Telephony Tones Generated

18.1.5.3.4 Functional Requirements

1. This service is used to send inband tones for end-to-end signalling purposes.
2. The toneToSend parameter specifies standard tones. The switching function provides the exact tone based upon many factors such as country and configuration information.
3. A Generate Telephony Tones service request may be rejected if there is already a switching function generated tone (busy, music, ringback, etc.) on the call.
4. If the toneDuration parameter is not present in the service request, or if it is present but cannot be satisfied, the switching function may use its default value.
5. If a Generate Telephony Tones service request is received by the switching function while a previous Generate Digits service request has not yet been completed, the new request may or may not be rejected, but in any case the digits shall not be interleaved or overlaid.
6. The requested tone continues to be generated until the specified duration expires, until it is canceled by using the Cancel Telephony Tones service, or until the call is cleared.

18.1.6 Send User Information

C ⟶ S

The Send User Information service is used to send user data information.

This service does not affect the state or progress of a call.

© ISO/IEC 2007 – All rights reserved

Copyright International Organization for Standardization
Provided by IHS under license with ISO
No reproduction or networking permitted without license from IHS
Not for Resale

Figure 18-6 Send User Information Service

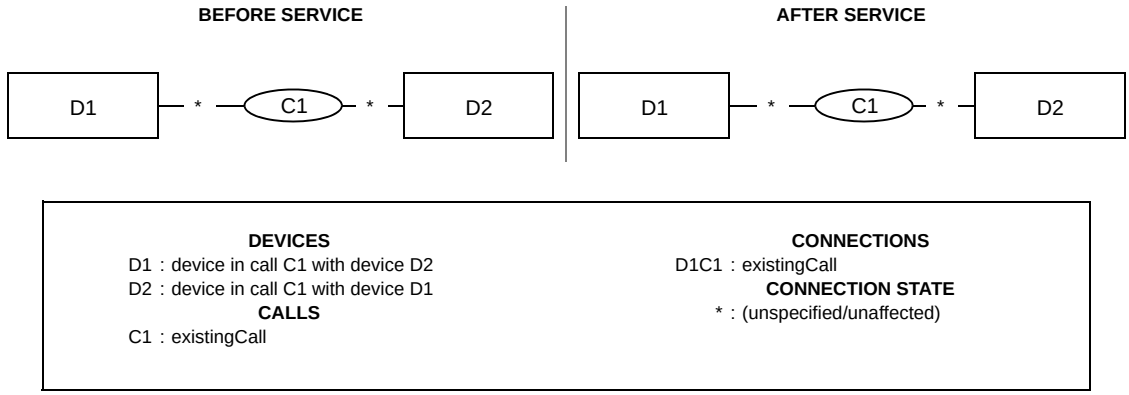

Note that the existingCall connectionID could either be the D1C1 or the D2C1 connections in the above figure.

18.1.6.1 Service Request

Table 18-22 Send User Information—Service Request

Parameter Name	Type	M/ O/C	Description
existingCall	ConnectionID	M	Specifies the connection on whose behalf user data is to be sent.
userData	UserData	M	Specifies the user data to send.
security	CSTASecurityData	O	Specifies timestamp information, message sequence number, and security information.
privateData	CSTAPrivateData	O	Specifies non-standardized information.

18.1.6.2 Service Response

The capability exchange services describe the type of acknowledgement model (atomic or multi-step) that the switching function supports for this service request.

18.1.6.2.1 Positive Acknowledgement

Table 18-23 Send User Information—Positive Acknowledgement

Parameter Name	Type	M/ O/C	Description
security	CSTASecurityData	O	Specifies timestamp information, message sequence number, and security information.
privateData	CSTAPrivateData	O	Specifies non-standardized information.

Note that the positive acknowledgement does not necessarily mean that the user information has been successfully received by the other device in the call. It only indicates that user information has been sent.

18.1.6.2.2 Negative Acknowledgement

The negative acknowledgement error codes are described in 12.2.14, “ErrorValue”, on page 115.

18.1.6.3 Operational Model

© ISO/IEC 2007 – All rights reserved
Copyright International Organization for Standardization
Provided by IHS under license with ISO
No reproduction or networking permitted without license from IHS
Not for Resale

18.1.6.3.1 Connection State Transitions

There are no connection state changes due to this service.

18.1.6.3.2 Device-Type Monitoring Event Sequences

Table 18-24 Send User Information—Device-Type Monitoring Event Sequences

Monitored Device	Connection	Event
D1	D1C1	Call Information
D2	D1C1	Call Information

18.1.6.3.3 Call-Type Monitoring Event Sequences

Table 18-25 Send User Information—Call-Type Monitoring Event Sequences

Monitored Call	Connection	Event
C1	D1C1	Call Information

18.1.6.3.4 Functional Requirements

1. The Send User Information is used to send information end to end. The user data provided in the Send User Information service is not managed or maintained by the switching function, but instead transmitted to all devices in the call. For a complete description of the behaviour of user data, refer to 6.1.2.4, “User Data”, on page 44.
2. The ability to send user information, the timing of when the information can be sent, and the size of the data, depends upon the switching function’s capabilities and the underlying network (such as ISDN).
3. The Call Information event is used to provide the user data information received on a call.
4. The Send User Information service can be used to send call-related messages between devices in a call. The call can either be an existing call (with media) or a call created (without media) for the purpose of exchanging messages.
5. The format of user data is switching function dependent. It is recommended that a format such as MessageInfo (see 12.2.20 on page 133) be used to describe the type of data contained in the user data parameter.

18.2 Events

Table 18-26 Call Associated Feature Events Summary

Call Associated Feature Event	Description	Pg.
18.2.1 Call Information	Indicates that call associated information (such as correlator data, account code, authorisation code, call qualifying data, etc.) has been collected for a call.	380
18.2.2 Charging	Indicates that new charging information has arrived for a device involved in a call.	382
18.2.3 Digits Generated	Indicates that (DTMF or rotary) digits have been generated.	383
18.2.4 Telephony Tones Generated	Indicates that telephony tones have been generated.	384
18.2.5 Service Completion Failure	Indicates that a previous multi-step computing function initiated service request has failed before that service’s successful completion conditions were satisfied.	386

--`,,```,,,,````-`-`,,`,,`,`,,`---© ISO/IEC 2007 – All rights reserved

Copyright International Organization for Standardization
Provided by IHS under license with ISO
No reproduction or networking permitted without license from IHS
Not for Resale

18.2.1 Call Information

The Call Information event indicates that call associated information has been collected/updated for a call.

Common situations that generate this event include:

- The account code or authorization code has been included or changed via a call control service request, or has been manually entered.
- The Associate Data service has been used to associate information with a call.
- User data or correlator data has been received independent of call activity (via the Send User Information service or as a result of non-call related activity from an external network).
- CallerID information associated with the call has been updated.
- Services permitted information has been updated as a result of another connection changing state.
- Device information associated with a device in a call has been updated.

Figure 18-7 Call Information Event

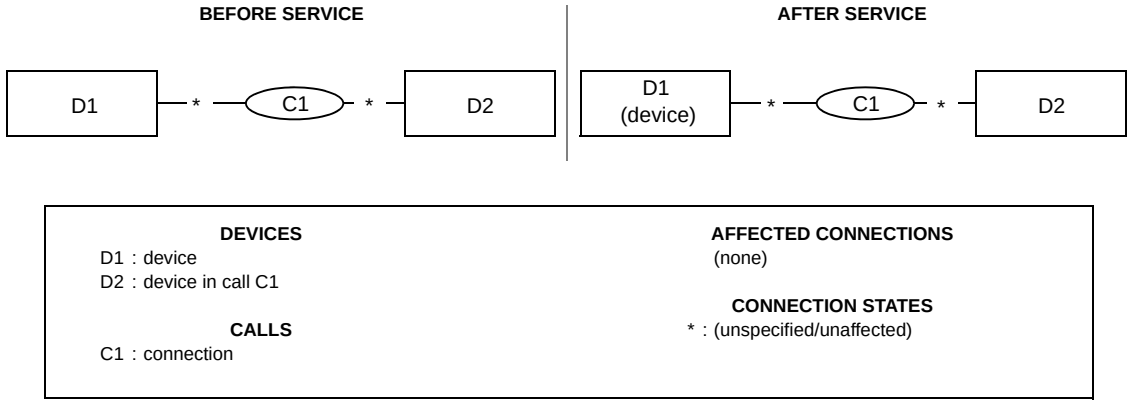

Note that in some situations, there may only be one device (D1) in the call.

18.2.1.1 Event Parameters

Table 18-27 Call Information—Event Parameters

Parameter Name	Type	M/ O/C	Description
monitorCrossRefID	MonitorCrossRefID	M	Associates the event to an established monitor.
connection	ConnectionID	M	Indicates the connection of the device responsible for associating the information with the call.
device	SubjectDeviceID	M	Indicates the device responsible for associating the information with the call.
callingDevice [a]	CallingDeviceID	C	Indicates the original calling device associated with the call
accountInfo [a]	AccountInfo	C	Indicates the account code associated with the call.
authorisationCode [a]	AuthCode	C	Indicates the authorization code associated with the call.
correlatorData [a]	CorrelatorData	C	Indicates the correlator data associated with the call.
servicesPermitted [a]	ServicesPermitted	C	Provides a list of services that can be applied to the specified connection.
userData [a]	UserData	C	Provides information that has been sent from another device.

© ISO/IEC 2007 – All rights reserved
Copyright International Organization for Standardization
Provided by IHS under license with ISO
No reproduction or networking permitted without license from IHS
Not for Resale

Table 18-27 Call Information—Event Parameters (continued)

Parameter Name	Type	M/ O/C	Description
callQualifyingData [a]	CallQualifyingData	C	Indicates the call qualifying data (wrap code, walk away code, etc.) associated with the call.
connectionInfo [a]	ConnectionInformation	C	Indicates the connection information associated with the connection.
callLinkageDataList [a]	List	C	Specifies the global call data and thread data associated with the call. The parameter consists of the following components: • newCallLinkageData (M) CallLinkageData - specifies the call linkage data associated with the resulting call. • oldCallLinkageData (M) CallLinkageData - specifies the call linkage data that was discarded as the result of a feature. See Functional Requirement # 7.
callCharacteristics [a]	CallCharacteristics	C	Specifies the high level characteristics (ACD call, Priority call, etc.) associated with the call. See 12.2.4 for the complete set of possible values.
subjectOfCall [a]	SubjectOfCall	C	Specifies the subject/intent associated with the call.
languagePreferences [a]	LanguagePreferences	C	Specifies the language preferences associated with the call.
deviceInfo	DeviceID	C	Specifies the device information (e.g. name) that has been associated with the connection.
security	CSTASecurityData	O	Specifies timestamp information, message sequence number, and security information.
privateData	CSTAPrivateData	O	Non-standardized information with the event.

a. At least one of these service specific parameters shall be provided on this event.

18.2.1.2 Functional Requirements

1. When either the accountInfo or callQualifyingData parameters is provided, the callID component of the connectionID in the event may be omitted or may refer to the connectionID that no longer exists at the device. This may occur when a user enters a wrap code for a call that has just cleared, for example.
2. This event is generated when the switching function receives user data independent of call activity as a result of the Send User Information service or as a result of non-call activity from an external network, for example.
3. This event is generated when correlator data is created or changed independently of a call control service. It is not generated when correlator data is passed with a Call Control service request (in this case, the new correlator data is presented to the computing function through the appropriate call control event).
4. This event is generated when connection information (number of media stream channels, for example) is changed independently of a call control service. It is not generated when connection information is passed with a Call Control service request (in this case, the new connection information is presented to the computing function through the appropriate call control event).
5. If the Associate Data service is used to associate data with a call, the Call Information event is generated.

© ISO/IEC 2007 – All rights reserved

Copyright International Organization for Standardization
Provided by IHS under license with ISO
No reproduction or networking permitted without license from IHS
Not for Resale

6. If the list of CSTA services that can be applied to a connection changes as the result of another connection changing state, for example, the Call Information event is generated with the updated servicesPermitted parameter associated with the specified connection that did not change state.
7. The callLinkageDataList parameter is used to indicate that the callLinkageData associated with a call has been updated. See 6.1.2.7.4, “Synchronization of Call Linkage Data”, on page 49 for more information.

18.2.2 Charging

The Charging event indicates that new call charging information (such as a network provided Periodic Pulse Metering (PPM) signal) has been detected for a device involved in a call. This event may occur after the call has been released, to report arrival of additional call charge information.

Figure 18-8 Charging Event

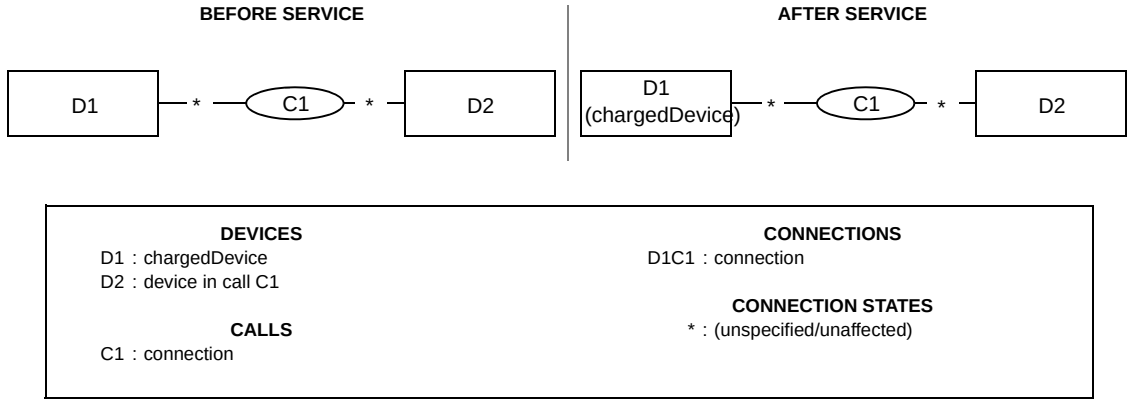

18.2.2.1 Event Parameters

Table 18-28 Charging—Event Parameters

Parameter Name	Type	M/ O/C	Description
monitorCrossRefID	MonitorCrossRefID	M	Associates the event to an established monitor.
connection	ConnectionID	M	Indicates the call for which the device is being charged.
chargedDevice	DeviceID	M	Indicates the device that is being charged. If this device is not specified then this parameter indicates “Unknown” or “Not Required”.
chargingInfo	ChargingInfo	M	Indicates an intermediate or total value of charging or currency units for the device being charged.
cause	EventCause	O	Indicates a reason for the event.
security	CSTASecurityData	O	Indicates timestamp information, message sequence number, and security information.
privateData	CSTAPrivateData	O	Indicates the non-standardized information.

18.2.2.2 Event Causes

Table 18-29 Charging—Event Causes

Event Cause	Description	Associated Features
Network Signal	The event was generated as the result of a particular network event or condition.	External Call
Normal	Charging information has been detected.	External Call

© ISO/IEC 2007 – All rights reserved
Copyright International Organization for Standardization
Provided by IHS under license with ISO
No reproduction or networking permitted without license from IHS
Not for Resale

Table 18-29 Charging—Event Causes (continued)

Event Cause	Description	Associated Features
Timeout	The event was generated because of a timeout.	External Call

18.2.2.3 Functional Requirements

1. The frequency with which this event is generated depends upon the implementation of the call charge information providing service outside the switching sub-domain. It also may depend upon the switching function implementation.

18.2.3 Digits Generated

The Digits Generated event indicates that DTMF or rotary digits have been generated at a device.

Common situations that generate this event include:

- The switching function generates DTMF or rotary digits for the device of a given connection as the result of the Generate Digits service or through manual activity.

Figure 18-9 Digits Generated Event

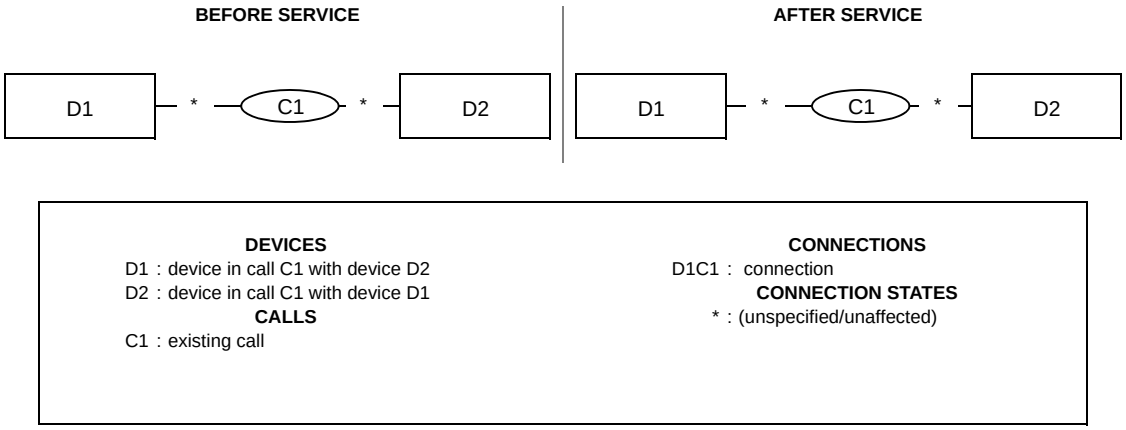

18.2.3.1 Event Parameters

Table 18-30 Digits Generated—Event Parameters

Parameter Name	Type	M/ O/C	Description
monitorCrossRefID	MonitorCrossRefID	M	Associates the event to an established monitor.
connection	ConnectionID	M	The connection at the device
digitGeneratedList	Characters (64)	M	The sequence of digits generated. • For rotary digits: 0, 1, 2, 3, 4, 5, 6, 7, 8, 9, A, B, C, D • For DTMF digits: 0, 1, 2, 3, 4, 5, 6, 7, 8, 9, *, #, A, B, C, D This parameter shall only include previously unreported digits.
digitDurationList	List of Values	O	The list of corresponding digit durations, in milliseconds for each generated digit.

© ISO/IEC 2007 – All rights reserved

Copyright International Organization for Standardization
Provided by IHS under license with ISO
No reproduction or networking permitted without license from IHS
Not for Resale

Table 18-30 Digits Generated—Event Parameters (continued)

Parameter Name	Type	M/ O/C	Description
pauseDurationList	List of Values	O	The list of corresponding pauses, in milliseconds, before each generated digit. The duration of the pause before the first digit is zero.
connectionInfo	ConnectionInformation	O	Specifies the connection information associated with the connection. If this parameter is not present, then the connection information is switching function specific.
security	CSTASecurityData	O	Specifies timestamp information, message sequence number, and security information.
privateData	CSTAPrivateData	O	Specifies non-standardized information.

18.2.3.2 Functional Requirements

1. A Digits Generated event is sent when the device of the specified connection generates digits (via the Generate Digits service or through manual activity).
2. The Data Collection services (Clause 25, “Data Collection Services”) are used to report DTMF or rotary digits that are received over a connection at a device.

18.2.4 Telephony Tones Generated

The Telephony Tones Generated event indicates that telephony tones have been generated at a device.

Common situations that generate this event include:

- The switching function generates telephony tones (via the Generate Telephony Tones service, for example) for the device of a given connection.

Figure 18-10 Telephony Tones Generated Event

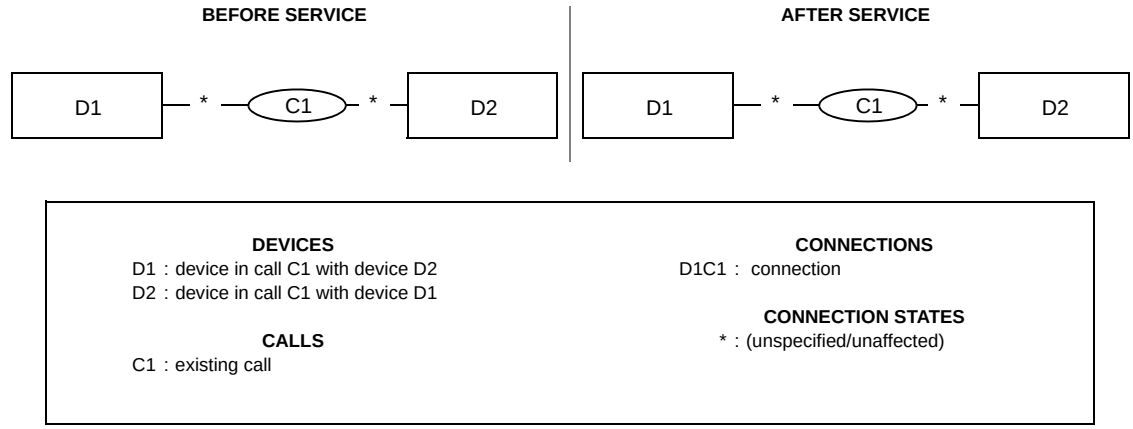

18.2.4.1 Event Parameters

Table 18-31 Telephony Tones Generated—Event Parameters

Parameter Name	Type	M/ O/C	Description
monitorCrossRefID	MonitorCrossRefID	M	Associates the event to an established monitor.
connection	ConnectionID	M	The connection at the device

© ISO/IEC 2007 – All rights reserved

Copyright International Organization for Standardization
Provided by IHS under license with ISO
No reproduction or networking permitted without license from IHS
Not for Resale

Table 18-31 Telephony Tones Generated—Event Parameters (continued)

Parameter Name	Type	M/ O/C	Description
toneGenerated	Enumerated	C	Specifies the generated tone. The complete set of possible values is: • beep • billing • busy • carrier • confirmation • dial • faxCNG • hold • howler • intrusion • modemCNG • park • record warning (indicates call may be being recorded) • reorder • ringback • silence • SIT VC • SIT IC • SIT RO • SIT NC • SwitchSpecified0 through SwitchSpecified100 - reserved for switch specified tones. • other • unknown This parameter shall not be provided when a previously reported tone has stopped being generated.
toneFrequency	Value	O	Specifies (in Hz) the switching function determined frequency of the generated tone. This parameter shall not be provided if the toneGenerated is anything other than “other”.
toneDuration	Value	O	The duration, in milliseconds, of the tone. This parameter shall not be provided if the toneGenerated is anything other than “other”.
pauseDuration	Value	O	The pause, in milliseconds, between the last tone and this one. This parameter shall not be provided if the toneGenerated is anything other than “other”.
connectionInfo	ConnectionInformation	O	Specifies the connection information associated with the connection. If this parameter is not present, then the connection information is switching function specific.
security	CSTASecurityData	O	Specifies timestamp information, message sequence number, and security information.
privateData	CSTAPrivateData	O	Specifies non-standardized information.

© ISO/IEC 2007 – All rights reserved

Copyright International Organization for Standardization
Provided by IHS under license with ISO
No reproduction or networking permitted without license from IHS
Not for Resale

18.2.4.2 Functional Requirements

1. The Telephony Tones Generated event is sent when the device of the specified connection generates telephony tones (via the Generate Telephony Tones service).
2. When the generated telephony tone is no longer generated (due to the Cancel Telephony Tones service, for example) another Telephony Tones Generated event may be sent (if the switching function supports the generation of the event when a telephony tone is stopped) to indicate that the telephony tone is no longer being generated (with the toneGenerated parameter not provided).
3. The toneFrequency, toneDuration, and pauseDuration parameters can only be provided when the generatedTone is “other”.
4. The services described in Clause 25, “Data Collection Services” are used to report telephony tones that are received over a connection at a device.

18.2.5 Service Completion Failure

The Service Completion Failure event indicates that a previous multi-step computing function initiated service request (as indicated by the switching function in the capabilities exchange services) has failed before that service’s successful completion conditions were satisfied.

18.2.5.1 Event Parameters

Table 18-32 Service Completion Failure—Event Parameters

Parameter Name	Type	M/ O/C	Description
monitorCrossRefID	MonitorCrossRefID	M	Associates the event to an established monitor.
primaryCall	Structure	M	Specifies information for the connection in the primary call that is associated with the service request. This includes: • deviceID (M) DeviceID - a device involved in the call. • connectionID (M) ConnectionID - a connection at the device. • localConnectionState (M) LocalConnectionState - the local connection state of the connection. • connectionInformation (O) ConnectionInformation - the connection information for the connection.
secondaryCall	Structure	O	Specifies information for the connection in the secondary call that is associated with the service request. This includes: • deviceID (M) DeviceID - a device involved in the call. • connectionID (M) ConnectionID - a connection at the device. • localConnectionState (M) LocalConnectionState - the local connection state of the connection. • connectionInformation (O) ConnectionInformation - the connection information for the connection. This parameter may only be present if the service request involved a secondary call.

© ISO/IEC 2007 – All rights reserved

Copyright International Organization for Standardization
Provided by IHS under license with ISO
No reproduction or networking permitted without license from IHS
Not for Resale

Table 18-32 Service Completion Failure—Event Parameters (continued)

Parameter Name	Type	M/ O/C	Description
otherDevicesPrimaryCallList	List of Structures	O	Specifies information for each connection in the primary call. This includes: • deviceID (M) DeviceID - a device involved in the call. • connectionID (M) ConnectionID - a connection at the device. • localConnectionState (O) LocalConnectionState - the local connection state of the connection. • connectionInformation (O) ConnectionInformation - the connection information for the connection. This parameter may only be present if the other connections in the primary call still exist. This parameter may not contain the information associated with the primaryCall parameter.
otherDevicesSecondary CallList	List of Structures	O	Specifies information for each of the other connection in the secondary call. This includes: • deviceID (M) DeviceID - a device involved in the call. • connectionID (M) ConnectionID - a connection at the device. • localConnectionState (O) LocalConnectionState - the local connection state of the connection. • connectionInformation (O) ConnectionInformation - connection information for the connectionID. This parameter shall only be present if the service request involved a secondary call and the other connections associated with the secondary call still exist. This parameter shall not contain the information associated with the secondaryCall parameter.
mediaCallCharacteristics	MediaCallCharacteristics	O	Specifies the media class and media characteristics of the call.
cause	EventCause	M	Indicates the reason why the service request did not complete.
security	CSTASecurityData	O	Specifies timestamp information, message sequence number, and security information.
privateData	CSTAPrivateData	O	Specifies non-standardized information with the event.

18.2.5.2 Event Causes

Table 18-33 Service Completion Failure—Event Causes

Event Cause	Description	Associated Features
Blocked	The call failed after a device has disconnected from a call leaving one other device remaining in the call.	Service Request Failure
Busy	The call encountered a busy or unavailable device.	Service Request Failure
Call Cancelled	The call has been terminated before the associated device has gone on-hook.	Service Request Failure
Call Not Answered	The call was not answered because a timer elapsed.	Service Request Failure
Destination Not Obtainable	The call could not reach the destination.	Service Request Failure
Destination Out of Order	The call failed because it encountered a destination out of service.	Service Request Failure

© ISO/IEC 2007 – All rights reserved

Copyright International Organization for Standardization
Provided by IHS under license with ISO
No reproduction or networking permitted without license from IHS
Not for Resale

Table 18-33 Service Completion Failure—Event Causes (continued)

Event Cause	Description	Associated Features
Do Not Disturb	The call failed because it encountered a device that has the do not disturb feature set.	Service Request Failure
Incompatible Destination	The call encountered an incompatible destination.	Service Request Failure
Invalid Account Code	The call has an invalid account code.	Service Request Failure
Invalid Number Format	The call failed because the dialled number is incorrect	Service Request Failure
Key Operation in Use	The call failed because an appearance is associated with an exclusive bridged device configuration and that the appearance is disabled until the call is terminated or until the call moves away from the device.	Service Request Failure
Lockout	The call encountered inter-digit time-out while dialling.	Service Request Failure
Maintenance	The call encountered a facility or device in a maintenance condition.	Service Request Failure
Network Congestion	The call encountered a congested network.	Service Request Failure
Network Not Obtainable	The call could not reach a destination network.	Service Request Failure
Network Signal	The call failed because it encountered a problem after it left the switching sub-domain.	Service Request Failure
No Available Agents	The call could not access any agent.	Service Request Failure
Not Available Bearer Service	The call failed because it was requested with a bearer capability that is currently not available.	Service Request Failure
Not Supported Bearer Service	The call failed because it was requested with a bearer capability that is currently not supported.	Service Request Failure
Number Changed	The called number has been changed to a new number.	Service Request Failure
Number Unallocated	The call failed because the called number is not allocated to a subscriber.	Service Request Failure
Reorder Tone	The call encountered a reorder condition.	Service Request Failure
Resources not Available	Resources were not available.	Service Request Failure
Selected Trunk Busy	The call failed because a specific selected Network Interface Device (e.g., trunk, CO line) is busy.	Service Request Failure
Trunks Busy	The call encountered Trunks Busy.	Service Request Failure
Unauthorized Bearer Service	The call failed because it was requested with an unauthorized bearer capability.	Service Request Failure

18.2.5.3 Functional Requirements

1. This event is only reported to device-type monitors on the device which has or had connection(s) that were used in the particular service request which is associated with this event (i.e., this event is not reported to any call-type monitors or device-type monitors for other devices in the call(s) associated with the service request).
2. If the switching function supports this event, it shall be provided on all multi-step service requests (supported by the switching function) if the completion conditions is not successfully met.
3. The Service Completion Failure event shall not be provided by the switching function to indicate a connection's transition to the Fail state. A Failed event shall be provided to indicate this.
4. If event flow, prior to receiving the Service Completion Failure event, has indicated that the service request has caused a state change, it is up to the computing function to apply the appropriate service(s) to return the call(s) and/or device(s) back to their original conditions (if needed and possible).

© ISO/IEC 2007 – All rights reserved

Copyright International Organization for Standardization
Provided by IHS under license with ISO
No reproduction or networking permitted without license from IHS
Not for Resale

19 Media Attachment Services & Events

This clause describes services and events which enable access to the media stream of a call through attachment and detachment of media services to the call.

19.1 Services

Table 19-1 Media Attachment Services Summary

Media Attachment Service	Description	Pg.
19.1.1 Attach Media Service	Attaches a media service instance to a call.	389
19.1.2 Detach Media Service	Detaches a media service instance from a call.	392

19.1.1 Attach Media Service

C ⟶ S

The Attach Media Service service attaches an existing call to a media service instance for the purpose of transmitting media stream data to the call or receiving media stream data from the call.

The attachment is made at a connection associated with a media attachment device (MAD). The attachment may be performed by the switching function selecting a MAD and adding it to the call by means of a call control service(s) (e.g., Conference Call, Transfer Call, Deflect Call, Directed Pickup Call, Join Call), or may be performed via a device already in the call (that has media access capabilities). At the completion of this service request a Media Attached event is generated on monitors associated with the specified call or device. This event may contain the associated mediaStreamID for accessing the media service instance.

The service request specifies a media service instance by choosing appropriate values for the mediaServiceType and mediaServiceInstanceID parameters, and a connectionMode parameter that specifies how the attachment is to be made.

The roles played by the various devices in the call, and the means by which the attachment is performed, depend upon the connectionMode. The connectionMode consists of a set of values that specify the call control service(s) that is to be applied to the connection so that the MAD can be added to the call, or the value of direct, which specifies that the MAD is already part of the call.

Refer to the specification of the call control service(s) associated with the specified connectionMode for a description of the operational model.

19.1.1.1 Service Request

Table 19-2 Attach Media Service—Service Request

Parameter Name	Type	M/ O/C	Description
connection	ConnectionID	M	Specifies the connection at the attaching device.
mediaServiceType	MediaServiceType	M	Specifies the requested media service type.
mediaServiceVersion	Value	O	Specifies the version of the media services.
mediaServiceInstanceID	MediaServiceInstanceID	O	Specifies the desired media service instance.

© ISO/IEC 2007 – All rights reserved

Table 19-2 Attach Media Service—Service Request (continued)

Parameter Name	Type	M/ O/C	Description
connectionMode	Enumerated	M	Specifies the requested media service connection mode. The complete set of possible values is: • consultationConference - conference the media access device (MAD) into the call via the Consultation Call and Conference Call models. • consultationConferenceHold - conference the MAD into the call via a Consultation Call and Hold Call models (the connection at the attaching device is placed on hold). • deflect - move the call from the attaching device to the MAD via the Deflect Call model. • directedPickup - direct the call from the attaching device to the MAD via the Directed Pickup Call model. • join - add a device into the call via the Join Call model. The application chooses which device is the MAD in the resulting conference. • singleStepConference - conference the MAD into the call via the Single Step Conference Call models. • singleStepConferenceHold - conference the MAD into the call via a Single Step Conference Call and Hold Call models (the connection at the attaching device is placed on hold). • singleStepTransfer - transfer that MAD into the call via the Single Step Transfer Call model. • transfer - transfer the MAD into the call via the Consultation Call and Transfer Call models. • direct - bind the media service instance directly to the existing connection at the attaching device.
requestedConnectionState	LocalConnectionState	O	Specifies the connection state in which the MAD shall be at the time that the Media Attached event is generated.
security	CSTASecurityData	O	Specifies timestamp information, message sequence number, and security information.
privateData	CSTAPrivateData	O	Specifies non-standardized information.

19.1.1.2 Service Response

The capability exchange services describe the type of acknowledgement model (atomic or multi-step) that the switching function supports for this service request.

© ISO/IEC 2007 – All rights reserved

Copyright International Organization for Standardization
Provided by IHS under license with ISO
No reproduction or networking permitted without license from IHS
Not for Resale

19.1.1.2.1 Positive Acknowledgement

Table 19-3 Attach Media Service—Positive Acknowledgement

Parameter Name	Type	M/ O/C	Description
mediaConnection	ConnectionID	C	Specifies the connection at the media access device. See Functional Requirement #C.
mediaDevice	DeviceID	C	Specifies the device identifier of the media access device. See Functional Requirement #C.
mediaServiceInstanceID	MediaServiceInstanceID	O	Specifies the media service instance used.
mediaConnectionInfo	ConnectionInformation	O	Specifies the connection information associated with the mediaConnection connection. If this parameter is not present, then the connection information is switching function specific.
security	CSTASecurityData	O	Specifies timestamp information, message sequence number, and security information.
privateData	CSTAPrivateData	O	Specifies non-standardized information.

19.1.1.2.2 Negative Acknowledgement

The negative acknowledgement error codes are described in 12.2.14, “ErrorValue”, on page 115.

19.1.1.3 Operational Model

19.1.1.3.1 Connection State Transitions

Refer to the specification of the call control service(s) associated with the specified connectionMode for a description of the connection state transitions.

19.1.1.3.2 Device-Type Monitoring Event Sequences

Table 19-4 Attach Media Service—Device-Type Monitoring Event Sequences

Monitored Device	Connection	Event	Event Cause
(media access device)	DxCx	Call Control events depend upon the connectionMode parameter.	
	DxCx	Media Attached	(not applicable)
(other devices in the call)	DxCx	Call Control events depend upon the connectionMode parameter.	
	DxCx	Media Attached	(not applicable)

19.1.1.3.3 Call-Type Monitoring Event Sequences

Table 19-5 Attach Media Service—Call-Type Monitoring Event Sequences

Monitored Call	Connection	Event	Event Cause
Cx	DxCx	Call Control events depend upon the connectionMode parameter.	
	DxCx	Media Attached	(not applicable)

Note that the Media Attached event may be generated before other call control events associated with adding the media access device to the call.

© ISO/IEC 2007 – All rights reserved

Copyright International Organization for Standardization
Provided by IHS under license with ISO
No reproduction or networking permitted without license from IHS
Not for Resale

19.1.1.3.4 Functional Requirements

1. If the computing function is monitoring the call or any devices in the call, it shall be prepared to receive the call control events, if any, associated with adding the media access device to the call (e.g., Conferenced, Transferred, Held) events.
2. The specification of the call control service(s) (service description, operational model, functional requirements, etc.) that are described by the connectionMode parameter apply to the Attach Media service.
3. Multiple attachments to media services for the same call and connection are possible. However, implementations may place limits on the number of such attachments. Each additional attachment may or may not involve a conference/transfer operation (as in the case of the first attachment). If the computing function tries to attach a mediaServiceType to a connection that already has that mediaServiceType attached, the request will be rejected by the switching function.
4. Authentication with the media service is not implied by a positive acknowledgement to an Attach Media Service service request. The computing function shall open a session to and authenticate to the media service through the appropriate mechanisms.
5. Versioning of the media service is supported via a separate mediaServiceVersion parameter. With respect to this service, however, different versions of a media service are treated as if they were different media services.
6. The switching function may place restrictions on the services that may be applied to a media access device. As a result, the computing function should always use the Detach Media Service service to release the binding of the media service instance from the call rather than trying to manipulate the media access device directly using other call control services.
7. The mediaConnection and mediaDevice parameters in the positive acknowledgement to this service shall be provided only if the connectionMode parameter in the service request is any value other than direct.

19.1.2 Detach Media Service C → S

The Detach Media Service service removes a previously attached media service instance from a call. This request releases a previously established association (binding) between a connection and a media service. If a media access device was added to the call when the media service instance was attached and that media access device is no longer needed, then the media access device is removed (i.e., cleared) from the call.

There are two cases for the Detach Media Service service request:

- Case A: A media access device (D3) was previously connected into the call using the Attach Media Service service. In this case the media access device is removed from the call by this service. Figure 19-1 is an example where a media access device that was conferenced into a call is detached from a call.

© ISO/IEC 2007 – All rights reserved

Copyright International Organization for Standardization
Provided by IHS under license with ISO
No reproduction or networking permitted without license from IHS
Not for Resale

Figure 19-1 Detach Media Service (Case A)

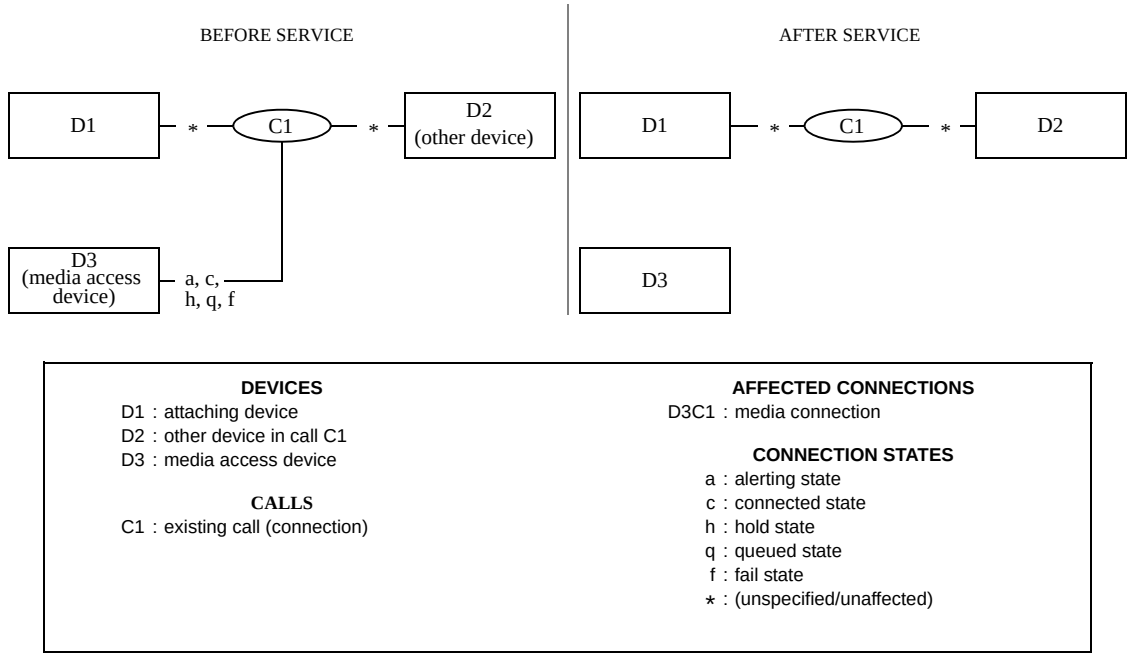

- Case B: The media service instance was directly bound to an existing connection (D1C1) in the call. In this case this detaching device remains in the call after the service request.

Figure 19-2 Detach Media Service (Case B)

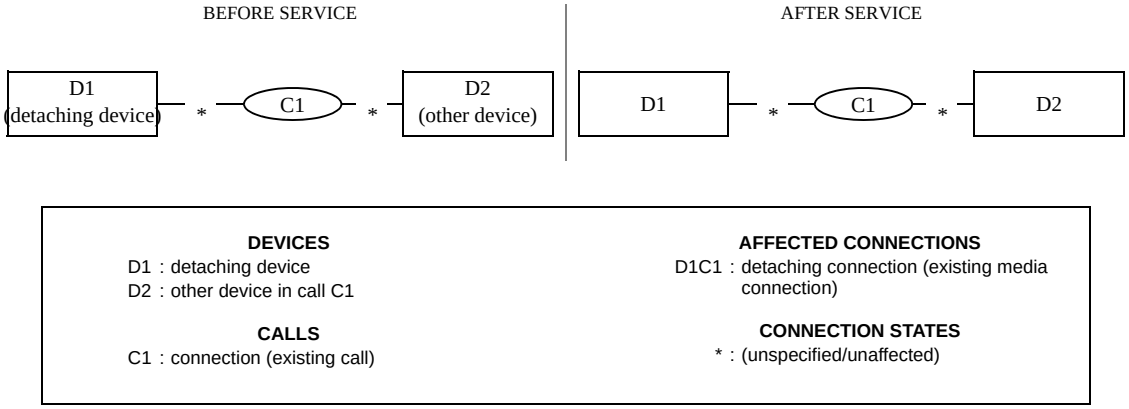

19.1.2.1 Service Request

Table 19-6 Detach Media Service—Service Request

Parameter Name	Type	M/ O/C	Description
connection	ConnectionID	M	Specifies the connection at the media access device, if used. Otherwise, specifies the connection at the detaching device.
mediaServiceType	MediaServiceType	M	Specifies the requested media service type to detach.
security	CSTASecurityData	O	Specifies timestamp information, message sequence number, and security information.
privateData	CSTAPrivateData	O	Specifies non-standardized information.

© ISO/IEC 2007 – All rights reserved

Copyright International Organization for Standardization
Provided by IHS under license with ISO
No reproduction or networking permitted without license from IHS
Not for Resale

19.1.2.2 Service Response

The capability exchange services describe the type of acknowledgement model (atomic or multi-step) that the switching function supports for this service request.

19.1.2.2.1 Positive Acknowledgement

Table 19-7 Detach Media Service—Positive Acknowledgement

Parameter Name	Type	M/ O/C	Description
security	CSTASecurityData	O	Specifies timestamp information, message sequence number, and security information.
privateData	CSTAPrivateData	O	Specifies non-standardized information.

19.1.2.2.2 Negative Acknowledgement

The negative acknowledgement error codes are described in 12.2.14, “ErrorValue”, on page 115.

19.1.2.3 Operational Model

19.1.2.3.1 Connection State Transitions

The following tables describes the connections that are affected by this service.

- Case A: A previously added media access device (D3) is removed from the call.

Table 19-8 Detach Media Service—Connection State Transitions (Case A)

Connection	Initial State (Required)	Final State
D1C1	(Ignored)	(Unaffected; no transition due to this service)
D2C1	(Ignored)	(Unaffected; no transition due to this service)
D3C1 (media connection)	Alerting, Connected, Hold, Queued, Fail	Null

- Case B: The media service instance is unbound from a detaching device (D1) in the call.

Table 19-9 Detach Media Service—Connection State Transitions (Case B)

Connection	Initial State (Required)	Final State
D1C1	(Ignored)	(Unaffected; no transition due to this service)
D2C1	(Ignored)	(Unaffected; no transition due to this service)

19.1.2.3.2 Device-Type Monitoring Event Sequences

The following table describes the connections that are affected by this service.

© ISO/IEC 2007 – All rights reserved

Copyright International Organization for Standardization
Provided by IHS under license with ISO
No reproduction or networking permitted without license from IHS
Not for Resale

- Case A: A previously added media access device (D3) is removed from the call.

Table 19-10 Detach Media Service—Device-Type Monitoring Event Sequences (Case A)

Monitored Device	Connection	Event	Event Cause
D1	D3C1	Media Detached	(not applicable)
	D3C1	Connection Cleared	Normal Clearing
D2	D3C1	Media Detached	(not applicable)
	D3C1	Connection Cleared	Normal Clearing
D3 (media access device)	D3C1	Media Detached	(not applicable)
	D3C1	Connection Cleared	Normal Clearing

- Case B: The media service instance is unbound from a detaching device (D1) in the call.

Table 19-11 Detach Media Service—Device-Type Monitoring Event Sequences (Case B)

Monitored Device	Connection	Event	Event Cause
D1 (detaching device)	D1C1	Media Detached	(not applicable)
D2 (other device)	D1C1	Media Detached	(not applicable)

19.1.2.3.3 Call-Type Monitoring Event Sequences

- Case A: A previously added media access device (D3) is removed from the call.

Table 19-12 Detach Media Service—Call-Type Monitoring Event Sequences (Case A)

Monitored Call	Connection	Event	Event Cause
C1	D3C1	Media Detached	(not applicable)
	D3C1	Connection Cleared	Normal Clearing

- Case B: The media service instance is unbound from a detaching device (D1) in the call.

Table 19-13 Detach Media Service—Call-Type Monitoring Event Sequences (Case B)

Monitored Call	Connection	Event	Event Cause
C1 (existing call)	D1C1	Media Detached	(not applicable)

19.2 Events

Table 19-14 Media Attachment Events Summary

Media Attachment Event	Description	Pg.
19.2.1 Media Attached	Indicates that a media service instance has been attached to a call.	395
19.2.2 Media Detached	Indicates that a media service instance has been detached from a call.	396

19.2.1 Media Attached

The Media Attached event indicates an attachment of media services to a call. This event may be generated as a result of a previous Attach Media Service service request, or as a result of an automatic media service attachment.

Refer to the specification of the call control services(s) and resulting call control events(s) associated with the specified connectionMode for a description of the operational model.

© ISO/IEC 2007 – All rights reserved

Copyright International Organization for Standardization
Provided by IHS under license with ISO
No reproduction or networking permitted without license from IHS
Not for Resale

19.2.1.1 Event Parameters

Table 19-15 Media Attached—Event Parameters

Parameter Name	Type	M/ O/C	Description
monitorCrossRefID	MonitorCrossRefID	M	Associates the event to an established monitor.
mediaConnection	ConnectionID	M	Specifies the connection that was bound to the media service.
mediaDevice	SubjectDeviceID	M	Specifies the device identifier associated with the attached media service.
mediaServiceType	MediaServiceType	M	Specifies the media service type.
mediaServiceVersion	Value	O	Specifies the version of the media services.
mediaServiceInstanceID	MediaServiceInstanceID	O	Specifies the media service instance associated with the attached media service.
mediaStreamID	MediaStreamID	C	Specifies the Media stream ID used to access the media service. This parameter shall be provided if the switching function supports providing the mediaStreamID as indicated by the capability exchange services.
mediaCallCharacteristics	MediaCallCharacteristics	O	Specifies the media class and media characteristics of the call. See 12.2.15, “MediaCallCharacteristics”, on page 113 for the complete description.
callCharacteristics	CallCharacteristics	O	Specifies the high level characteristics (ACD call, Priority call, etc.) associated with the call. See 12.2.4, “CallCharacteristics”, on page 108 for the complete set of possible values.
localConnectionInfo	LocalConnectionState	C	Specifies the local connection state of the device associated with the Monitor Cross Reference ID. This parameter is mandatory for events generated for device-type monitors and otherwise shall not be provided.
mediaConnectionInfo	ConnectionInformation	O	Specifies the connection information associated with the mediaConnection connection. If this parameter is not present, then the connection information is switching function specific.
security	CSTASecurityData	O	Specifies timestamp information, message sequence number, and security information.
privateData	CSTAPrivateData	O	Specifies non-standardized information.

19.2.1.2 Functional Requirements

1. If a media access device was added to the call as a result of a successful Attach Media Service service request, then the mediaConnection and mediaDevice parameters refer to the media access device. If the media service instance was directly bound to an existing connection in the call, then the mediaConnection and mediaDevice parameters refer to the connection at that attaching device.

19.2.2 Media Detached

The Media Detached event indicates a detachment of media services from a connection. This event may be generated as a result of a previous Detach Media Service service request, or as a result of an automatic media service detachment.

There are two cases for the Media Detached event:

© ISO/IEC 2007 – All rights reserved

Copyright International Organization for Standardization
Provided by IHS under license with ISO
No reproduction or networking permitted without license from IHS
Not for Resale

- Case A: A media access device (D3) was previously connected into the call using the Attach Media Service service. In this case the media access device is removed from the call by this service.
- Case B: The media service instance was directly bound to an existing connection (D1C1) in the call. In this case this detaching device remains in the call after the service request.

Figure 19-3 Media Detached Event (Case A)

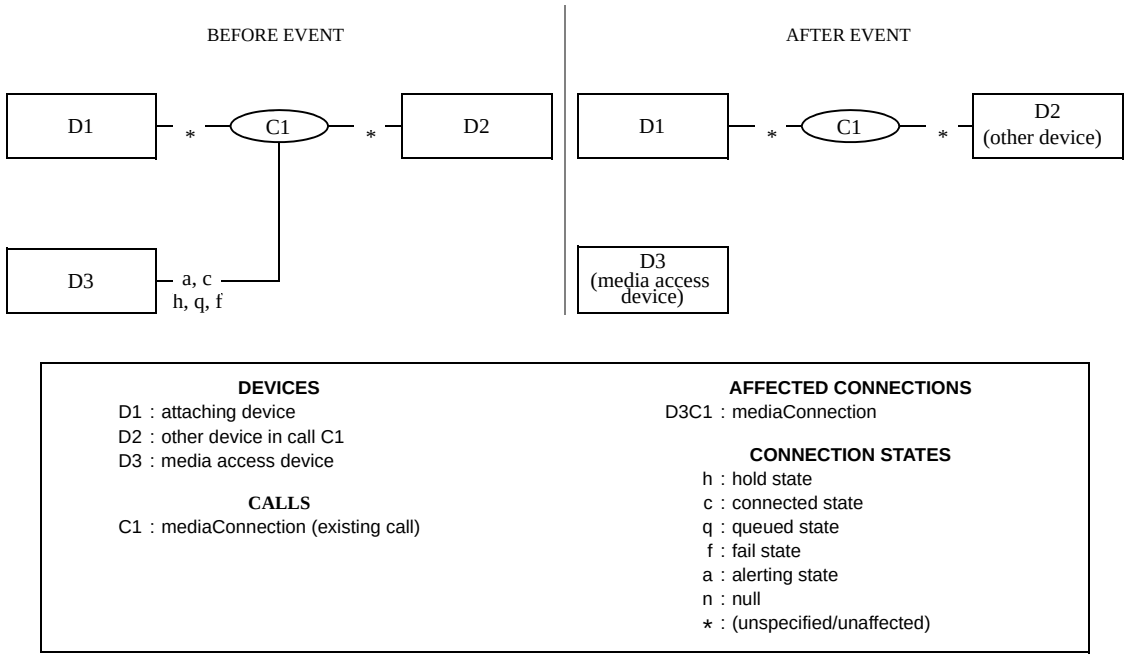

Figure 19-4 Media Detached Event (Case B)

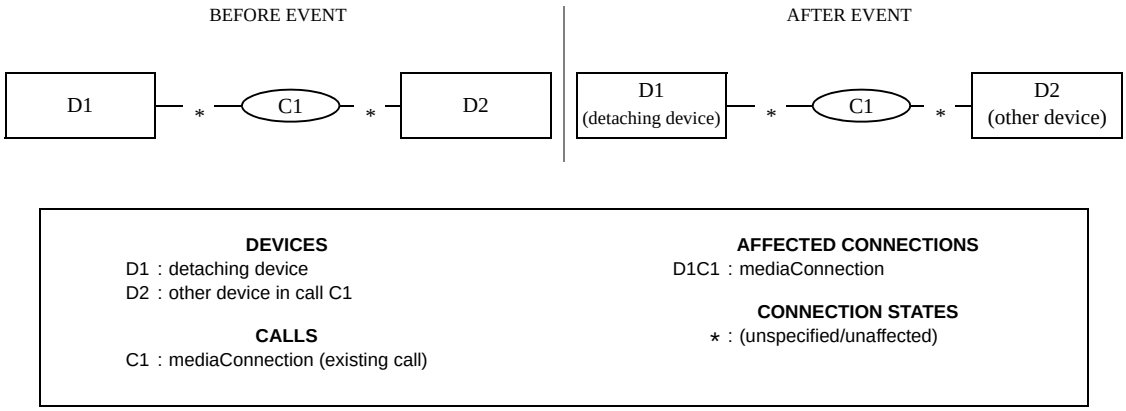

19.2.2.1 Event Parameters

Table 19-16 Media Detached—Event Parameters

Parameter Name	Type	M/ O/C	Description
monitorCrossRefID	MonitorCrossRefID	M	Associates the event to an established monitor.
mediaConnection	ConnectionID	M	Specifies the connection that was unbound from the media service.
mediaDevice	SubjectDeviceID	M	Specifies the device identifier associated with the detached media service.
mediaServiceType	MediaServiceType	M	Specifies the media service type detached.

© ISO/IEC 2007 – All rights reserved

Copyright International Organization for Standardization
Provided by IHS under license with ISO
No reproduction or networking permitted without license from IHS
Not for Resale

Table 19-16 Media Detached—Event Parameters (continued)

Parameter Name	Type	M/ O/C	Description
mediaServiceVersion	Value	O	Specifies the version of the media services.
mediaServiceInstanceID	MediaServiceInstanceID	O	Specifies the media service instance associated with the detached media service.
mediaStreamID	MediaStreamID	C	Specifies the Media stream ID associated with the media service that was detached. This parameter shall be provided if the switching function supports providing the mediaStreamID as indicated by the capability exchange services.
mediaCallCharacteristics	MediaCallCharacteristics	O	Specifies the media class and media characteristics of the call. See 12.2.15, “MediaCallCharacteristics”, on page 113 for the complete description.
callCharacteristics	CallCharacteristics	O	Specifies the high level characteristics (ACD call, Priority call, etc.) associated with the call. See 12.2.4, “CallCharacteristics”, on page 108 for the complete set of possible values.
localConnectionInfo	LocalConnectionState	C	Specifies the local connection state of the device associated with the Monitor Cross Reference ID. This parameter is mandatory for events generated for device-type monitors and otherwise shall not be provided.
mediaConnectionInfo	ConnectionInformation	O	Specifies the connection information associated with the mediaConnection connection. If this parameter is not present, then the connection information is switching function specific.
security	CSTASecurityData	O	Specifies timestamp information, message sequence number, and security information.
privateData	CSTAPrivateData	O	Specifies non-standardized information.

19.2.2.2 Functional Requirements

1. If a media access device was added to the call as a result of a successful Attach Media Service, then the mediaConnection and mediaDevice parameters refer to the media access device. If the media service instance was directly bound to an existing connection in the call, then the mediaConnection and mediaDevice parameters refer to the connection at the attaching device.
2. The switching function may initiate a media service detachment whenever it is unable to maintain the binding of the connection to the media service. This may occur as a result of other activity on the call.

20 Routeing Services

This section specifies two types of Routeing services:

- Route Registration services
- Call Routeing services

NOTE This clause describes Routeing services between the Switching Function and the Computing Function.

© ISO/IEC 2007 – All rights reserved

Copyright International Organization for Standardization
Provided by IHS under license with ISO
No reproduction or networking permitted without license from IHS
Not for Resale

20.1 Registration Services

Table 20-1 Route Registration Services Summary

Route Registration Service	Description	Pg.
15.1.1 Change Monitor Filter	Registers the computing function as a routeing server for a specified routeing device or for the entire switching function.	199
20.1.2 Route Register Abort	Specifies that the switching function has terminated a routeing server registration.	401
20.1.3 Route Register Cancel	Unregisters the computing function as a routeing server.	402

20.1.1 Route Register

C ⟶ S

The Route Register service is used to register the computing function as a routeing server for a specific routeing device or as a routeing server for all routeing devices within the switching sub-domain. The computing function may be required to register for routeing services before it can receive any route requests for a routeing device from the switching function. A computing function may register to be the routeing server for more than one routeing device.

20.1.1.1 Service Request

Table 20-2 Route Register—Service Request

Parameter Name	Type	M/ O/C	Description
routeingDevice	DeviceID	C	Specifies the routeing device for which the computing function requests to be the routeing server. This parameter is mandatory if the switching function does not support the option of registering for all routeing devices in the switching sub-domain. Otherwise, the parameter is optional and if not present, indicates the registration is to be for all routeing devices in the switching sub-domain. See Functional Requirement #2.
requestedRouteingMediaClass	Bitmap	O	Specifies the media classes of calls that are being requested to be routed. Refer to the mediaClass component in 12.2.15, “MediaCallCharacteristics”, on page 113 for the complete set of possible values. Note that multiple bits may be set. If this parameter is not provided (or if the parameter is not supported by the switching function), it is switching function dependent which types of media calls are routed.
security	CSTASecurityData	O	Specifies timestamp information, message sequence number, and security information.
privateData	CSTAPrivateData	O	Specifies non-standardized information.

20.1.1.2 Service Response

This service follows the atomic acknowledgement model for this service request.

© ISO/IEC 2007 – All rights reserved

Copyright International Organization for Standardization
Provided by IHS under license with ISO
No reproduction or networking permitted without license from IHS
Not for Resale

20.1.1.2.1 Positive Acknowledgement

Table 20-3 Route Register—Positive Acknowledgement

Parameter Name	Type	M/ O/C	Description
routeRegisterReqID	RouteRegisterReqID	M	Specifies the routeing registration request identifier for this registration.
actualRouteingMediaClass	Bitmap	C	This parameter specifies the actual media classes of calls that are routed by the switching function for routeing registration. The actual media classes of calls routed may be the same or a subset of what was requested on the service request. If this parameter is supported by the switching function, it may be omitted if the requested and actual routeing media class parameters are the same otherwise it shall be provided. If the parameter is not supported by the switching function, then the switching function does not filter media classes for calls for specific routeing registrations. The capability exchange services indicates the media classes of calls that can be routed.
security	CSTASecurityData	O	Specifies timestamp information, message sequence number, and security information.
privateData	CSTAPrivateData	O	Specifies non-standardized information.

20.1.1.2.2 Negative Acknowledgement

The negative acknowledgement error codes are described in 12.2.14, “ErrorValue”, on page 115.

20.1.1.3 Operational Model

20.1.1.3.1 Connection State Transitions

There are no connection state changes due to this service.

20.1.1.3.2 Device-Type Monitoring Event Sequences

There are no events generated as a result of this service.

20.1.1.3.3 Call-Type Monitoring Event Sequences

There are no events generated as a result of this service.

20.1.1.3.4 Functional Requirements

1. The routeRegisterReqID parameter r eturned in the positive acknowledgement is used to identify the registration over which routeing requests will be sent. All routeing dialogues for the routeing device occur over this routeing registration. The routeRegisterReqID is also used when cancelling the routeing registration.
2. If the routeingDevice parameter on the service request is not provided and this option is supported, then the registration request is for all routeing devices within the switching sub-domain. If the switching function sends a positive acknowledgement to this request, the routeing server will receive route

© ISO/IEC 2007 – All rights reserved

Copyright International Organization for Standardization
Provided by IHS under license with ISO
No reproduction or networking permitted without license from IHS
Not for Resale

requests generated for all routeing devices within the switching sub-domain. Some switching function implementations may not support the capability to register for all routeing devices with a single Route Register request (i.e., with the routeingDevice parameter not provided), in which case the switching function will send a negative acknowledgement to the Route Register request. The capabilities exchange services can be used by the computing function to determine if registering for all routeing devices within the switching sub-domain is supported.

3. The number of simultaneous registrations allowed for the same routeing device is switching function dependent. Some switching functions may limit this number to one, in which case only one registration per routeing device is allowed. When the limit is reached, subsequent route register requests for the same routeing device will result in negative acknowledgements from the switching function.

20.1.2 Route Register Abort

S ⟶ C

This service is used by the switching function to asynchronously cancel an active routeing registration. This service invalidates a current routeing registration. There is no positive acknowledgement defined for this service.

20.1.2.1 Service Request

Table 20-4 Route Register Abort—Service Request

Parameter Name	Type	M/ O/C	Description
routeRegisterReqID	RouteRegisterReqID	M	Specifies the routeing registration request identifier for the routeing registration that was aborted.
security	CSTASecurityData	O	Specifies timestamp information, message sequence number, and security information.
privateData	CSTAPrivateData	O	Specifies non-standardized information.

20.1.2.2 Service Response

There are no service completion conditions for this service.

20.1.2.2.1 Positive Acknowledgement

There is no positive acknowledgement associated with this service.

20.1.2.2.2 Negative Acknowledgement

The negative acknowledgement error codes are described in 12.2.14, “ErrorValue”, on page 115.

20.1.2.3 Operational Model

20.1.2.3.1 Connection State Transitions

There are no connection state changes due to this service.

20.1.2.3.2 Device-Type Monitoring Event Sequences

There are no events generated as a result of this service.

20.1.2.3.3 Call-Type Monitoring Event Sequences

There are no events generated as a result of this service.

© ISO/IEC 2007 – All rights reserved

Copyright International Organization for Standardization
Provided by IHS under license with ISO
No reproduction or networking permitted without license from IHS
Not for Resale

20.1.2.3.4 Functional Requirements

1. The switching function may issue this service at any time when it can no longer maintain the routeing registration (e.g., when the associated routeing device goes out of service).

20.1.3 Route Register Cancel C → S

The Route Register Cancel service is used to cancel a previous route registration. This request terminates the routeing registration and the computing function receives no further routeing requests for that routeing registration once it receives the positive acknowledgement to the Route Register Cancel request.

20.1.3.1 Service Request

Table 20-5 Route Register Cancel—Service Request

Parameter Name	Type	M/ O/C	Description
routeRegisterReqID	RouteRegisterReqID	M	Specifies the routeing registration request identifier for which the routeing registration is to be cancelled.
security	CSTASecurityData	O	Specifies timestamp information, message sequence number, and security information.
privateData	CSTAPrivateData	O	Specifies non-standardized information.

20.1.3.2 Service Response

This service follows the atomic acknowledgement model for this service request.

20.1.3.2.1 Positive Acknowledgement

Table 20-6 Route Register Cancel—Positive Acknowledgement

Parameter Name	Type	M/ O/C	Description
security	CSTASecurityData	O	Specifies timestamp information, message sequence number, and security information.
privateData	CSTAPrivateData	O	Specifies non-standardized information.

20.1.3.2.2 Negative Acknowledgement

The negative acknowledgement error codes are described in 12.2.14, “ErrorValue”, on page 115.

20.1.3.3 Operational Model

20.1.3.3.1 Connection State Transitions

There are no connection state changes due to this service.

20.1.3.3.2 Device-Type Monitoring Event Sequences

There are no events generated as a result of this service.

20.1.3.3.3 Call-Type Monitoring Event Sequences

There are no events generated as a result of this service.

© ISO/IEC 2007 – All rights reserved

Copyright International Organization for Standardization
Provided by IHS under license with ISO
No reproduction or networking permitted without license from IHS
Not for Resale

20.1.3.3.4 Functional Requirements

1. The computing function shall continue to process outstanding routeing requests from the routeing device until it receives a positive acknowledgement for the Route Register Cancel service request. The switching function will not send any further route requests for a registration once it has sent the positive acknowledgement.

20.2 Services

Table 20-7 Call Routeing Services Summary

Routeing Services	Description	Pg.
20.2.1 Re-Route	This service requests an alternate destination from the one provided by a previous Route Select service and based on previous information provided for the call.	403
20.2.2 Route End	This service ends a routeing dialogue.	404
20.2.3 Route Reject	This service is sent to the switching function during a routeing dialogue to indicate that a call should be returned to the network for alternate routeing.	406
20.2.4 Route Request	This service requests that the computing function provides a destination for a call. To aid in the selection of a destination, the service request includes the current destination and may include additional information.	408
20.2.5 Route Select	This service is used by the computing function to provide the destination requested by a previous Route Request or Re-Route request.	410
20.2.6 Route Used	This service provides the actual destination for a call that has been routed using the Route Select service with its optional parameter that requests the route that was used.	412

20.2.1 Re-Route

S → C

The Re-Route service requests an alternate destination from the one provided by a previous Route Select service and based on previous information provided for the call.

20.2.1.1 Service Request

Table 20-8 Re-Route—Service Request

Parameter Name	Type	M/ O/C	Description
crossRefIdentifier	RouteingCrossRefID	M	Specifies the cross reference identifier associated with the routeing dialogue.
routeRegisterReqID	RouteRegisterReqID	C	Specifies the route register request identifier associated with the route registration for this routeing dialogue. See Functional Requirement #2.
replyTimeout	Value	O	Specifies the amount of time (in milliseconds) that the switching function will wait for a reply from the computing function, before it proceeds with default routeing for the call. If the parameter is not present or the value is 0, the amount of time is switching function specific.
correlatorData	CorrelatorData	C	Specifies the correlator data associated with the call. This parameter is mandatory if there is correlator data associated with the call (and if the parameter is supported).
callLinkageData	CallLinkageData	C	Specifies the global call data and thread data associated with the call. This parameter is mandatory if the switching function supports the call linkage feature otherwise it shall not be provided.

© ISO/IEC 2007 – All rights reserved

Copyright International Organization for Standardization
Provided by IHS under license with ISO
No reproduction or networking permitted without license from IHS
Not for Resale

Table 20-8 Re-Route—Service Request (continued)

Parameter Name	Type	M/ O/C	Description
security	CSTASecurityData	O	Specifies timestamp information, message sequence number, and security information.
privateData	CSTAPrivateData	O	Specifies non-standardized information.

20.2.1.2 Service Response

There are no service completion conditions for this service.

20.2.1.2.1 Positive Acknowledgement

There is no positive acknowledgement associated with this service.

20.2.1.2.2 Negative Acknowledgement

The negative acknowledgement error codes are described in 12.2.14, “ErrorValue”, on page 115.

20.2.1.3 Operational Model

20.2.1.3.1 Connection State Transitions

There are no connection state changes due to this service.

20.2.1.3.2 Device-Type Monitoring Event Sequences

There are no events generated as a result of this service.

20.2.1.3.3 Call-Type Monitoring Event Sequences

There are no events generated as a result of this service.

20.2.1.3.4 Functional Requirements

1. The requested route is sent from the computing function to the switching function by the Route Select service. The switching function shall use the routeingCrossRefID and routeRegisterReqID (if supported) parameters from the initial Route Request service to link this service to the others that are used to provide a route.
2. The routeRegisterReqID parameter is mandatory if the switching function supports route registration, and shall not be provided otherwise.
3. If the number of remaining retries (remainRetries parameter) is not provided by the computing function in the Route Select service, the computing function should be prepared to respond to all Re-Route service requests or terminate the routeing dialogue by using the Route End service when it cannot provide additional destinations.

20.2.2 Route End

C ◄► S

The Route End service ends a routeing dialogue. This service is bi-directional (i.e., it may be invoked by the switching function or the computing function).

The computing function can use the Route End service when it cannot provide a route for a call. Typically, this can occur if:

© ISO/IEC 2007 – All rights reserved

Copyright International Organization for Standardization
Provided by IHS under license with ISO
No reproduction or networking permitted without license from IHS
Not for Resale

- The computing function receives a valid routeing request for a call without sufficient call information and it cannot determine a routeing destination.
- The computing function has already provided all available destinations for a call and no more alternate destinations are available.
- The computing function does not have access to a database necessary to route the call.

In these cases, the computing function uses the Route End service to inform the switching function that it cannot provide a route for the call in question. The Route End service request will terminate the routeing dialogue (routeingCrossRefID) for the call. The Route End request does not clear the call. The switching function will continue to process the call using whatever default routeing algorithm is available (i.e., in a switching function specific way).

The switching function uses the Route End service when it ends a routeing dialogue. Typically, this can occur if:

- The call associated with the routeing cross reference identifier has been successfully routed. This may occur when the computing function has sent a Route Select service request and the switching function has successfully routed the call.
- The calling party has abandoned a call associated with the routeing cross reference identifier.
- The switching function timeout for a route request response has expired. This may occur if the computing function did not respond to a Route Request or Re-Route Request service within a switching function defined period.
- The switching function has ended a routeing dialogue due to internal resource (or other) problems.

20.2.2.1 Service Request

Table 20-9 Route End—Service Request

Parameter Name	Type	M/ O/C	Description
crossRefIdentifier	RouteingCrossRefID	M	Specifies the cross reference identifier associated with the routeing dialogue.
routeRegisterReqID	RouteRegisterReqID	C	Specifies the route register request identifier associated with the route registration for this routeing dialogue. See Functional Requirement #3.
errorValue	ErrorValue	O	Specifies the reason for the route end request (see 12.2.14, “ErrorValue”, on page 115 for more information on this parameter).
correlatorData	CorrelatorData	C	Specifies correlator data. See Functional Requirement #4.
security	CSTASecurityData	O	Specifies timestamp information, message sequence number, and security information.
privateData	CSTAPrivateData	O	Specifies non-standardized information.

20.2.2.2 Service Response

There are no service completion conditions for this service.

20.2.2.2.1 Positive Acknowledgement

There is no positive acknowledgement associated with this service.

© ISO/IEC 2007 – All rights reserved

Copyright International Organization for Standardization
Provided by IHS under license with ISO
No reproduction or networking permitted without license from IHS
Not for Resale

20.2.2.2.2 Negative Acknowledgement

The negative acknowledgement error codes are described in 12.2.14, “ErrorValue”, on page 115.

20.2.2.3 Operational Model

20.2.2.3.1 Connection State Transitions

There are no connection state changes due to this service.

20.2.2.3.2 Device-Type Monitoring Event Sequences

There are no events generated as a result of this service.

20.2.2.3.3 Call-Type Monitoring Event Sequences

There are no events generated as a result of this service.

20.2.2.3.4 Functional Requirements

1. The computing function can use this service to respond to either a Route Request or a Re-Route service request.
2. The routeingCrossRefID and routeRegisterReqID (if supported) parameters from the initial Route Request service shall be used to link this service to the others that are used to provide a route.
3. The routeRegisterReqID parameter is mandatory if the switching function supports route registration, and shall not be provided otherwise.
4. The correlatorData parameter meaning is dependent upon the direction of the service request.
   - if the Route End service request is sent from the Switching Function to the Computing Function then the parameter specifies the correlator data associated with the call. This parameter is mandatory if there is correlator data associated with the call (and if the parameter is supported).
   - if the Route End service request is sent from the Computing Function to the Switching Function then the parameter specifies the correlator data to associate with the call.

20.2.3 Route Reject C → S

The Route Reject service request is sent to the switching function during a routeing dialogue to indicate that a call should be returned to the originating network (the network from where the call entered the switching sub-domain where the routeing request was issued from) for alternate routeing.

20.2.3.1 Service Request

Table 20-10 Route Reject—Service Request

Parameter Name	Type	M/ O/C	Description
crossRefIdentifier	RouteingCrossRefID	M	Specifies the cross reference identifier associated with the routeing dialogue.
routeRegisterReqID	RouteRegisterReqID	C	Specifies the route register request identifier associated with the route registration for this routeing dialogue. See Functional Requirement #3.

© ISO/IEC 2007 – All rights reserved

Copyright International Organization for Standardization
Provided by IHS under license with ISO
No reproduction or networking permitted without license from IHS
Not for Resale

Table 20-10 Route Reject—Service Request (continued)

Parameter Name	Type	M/ O/C	Description
rejectCause	Enumerated	O	Specifies the reason why call should be returned to the originating network for alternate routeing. The complete set of possible values is: • BusyOverflow - all possible destinations for the call are busy or unavailable and there is no queueing mechanism (ACD, for example) available. • QueueTimeOverflow - all possible destinations for the call are busy or unavailable and the estimated holding time before an agent is able to answer the call is too long. • CapacityOverflow - all possible destinations are busy or unavailable and the call cannot be queued because the system is already at capacity. • CalendarOverflow - all possible calendar based destinations for the call are unavailable because of the time of the day or the day of the week. • UnknownOverflow - the computing function is unable to be more specific. See Functional Requirement #4.
correlatorData	CorrelatorData	O	Specifies the correlator data to associate with the call.
security	CSTASecurityData	O	Specifies timestamp information, message sequence number, and security information.
privateData	CSTAPrivateData	O	Specifies non-standardized information.

20.2.3.2 Service Response

There are no service completion conditions for this service.

20.2.3.2.1 Positive Acknowledgement

There is no positive acknowledgement associated with this service.

20.2.3.2.2 Negative Acknowledgement

The negative acknowledgement error codes are described in 12.2.14, “ErrorValue”, on page 115.

20.2.3.3 Operational Model

20.2.3.3.1 Connection State Transitions

There are no connection state changes due to this service.

20.2.3.3.2 Device-Type Monitoring Event Sequences

There are no events generated as a result of this service.

20.2.3.3.3 Call-Type Monitoring Event Sequences

There are no events generated as a result of this service.

© ISO/IEC 2007 – All rights reserved

Copyright International Organization for Standardization
Provided by IHS under license with ISO
No reproduction or networking permitted without license from IHS
Not for Resale

20.2.3.3.4 Functional Requirements

1. The computing function should issue the Route Reject service only in response to a Route Request or Re-Route Request from the switching function.
2. The routeingCrossRefID and routeRegisterReqID (if supported) parameters from the initial Route Request service shall be used to link this service to the others that are used to provide a route.
3. The routeRegisterReqID parameter is mandatory if the switching function supports route registration, and shall not be provided otherwise.
4. The rejectCause parameter provides additional information why the computing function is requesting that the switching function return the call to the originating network (the network from where the call entered the switching sub-domain where the routeing request was issued from) for alternate routeing. This information can be used by the switching function and/or passed to the originating network via network signalling protocols.

20.2.4 Route Request

S → C

The Route Request service requests that the computing function provide a destination for a call. To aid in the selection of a destination, the service request includes the current destination and may include additional information.

20.2.4.1 Service Request

Table 20-11 Route Request—Service Request

Parameter Name	Type	M/ O/C	Description
crossRefIdentifier	RouteingCrossRefID	M	Specifies the cross reference identifier associated with the routeing dialogue.
routeRegisterReqID	RouteRegisterReqID	C	Specifies the route register request identifier associated with the route registration for this routeing dialogue. See Functional Requirement #3.
currentRoute	CalledDeviceID	M	Specifies the current destination of the call for which a route is requested.
callingDevice	CallingDeviceID	O	Specifies the originator of the call.
routeingDevice	SubjectDeviceID	O	Specifies the device that initiated the Route Request service.
routedCall	ConnectionID	C	Specifies the ConnectionID of the call. This parameter is mandatory if the route request is call related. If the request is not call-related, then this parameter shall not be provided.
routeSelAlgorithm	Enumerated	O	Specifies the type of routeing algorithm requested. The complete set of possible values is: • ACD • Emergency • Least Cost • Normal • User Defined
associatedCallingDevice	AssociatedCallingDeviceID	C	Specifies the Network Interface Device associated with the calling device if the call is an external incoming call. This parameter is mandatory for all external incoming calls and shall not be provided otherwise.

© ISO/IEC 2007 – All rights reserved

Copyright International Organization for Standardization
Provided by IHS under license with ISO
No reproduction or networking permitted without license from IHS
Not for Resale

Table 20-11 Route Request—Service Request (continued)

Parameter Name	Type	M/ O/C	Description
associatedCalledDevice	AssociatedCalledDeviceID	C	For outgoing external calls, this parameter specifies the Network Interface Device associated with the originally called device. For incoming external calls, this parameter specifies a device within the switching sub-domain associated with the originally called device. This parameter is mandatory for all external outgoing calls and it is optional for external incoming calls.
priority	Boolean	O	Specifies the call priority. This may affect the selection of alternative routes. The complete set of possible values is: • True - Priority call. • False - Non-priority call.
replyTimeout	Value	O	Specifies the amount of time (in milliseconds) that the switching function will wait for a reply from the computing function, before it proceeds with default routeing for the call. If the parameter is not present or the value is 0, the amount of time is switching function specific.
correlatorData	CorrelatorData	C	Specifies the correlator data associated with the call. This parameter is mandatory if there is correlator data associated with the call (and if the parameter is supported).
mediaCallCharacteristics	MediaCallCharacteristics	O	This specifies the media class (voice, digital data, etc.) and characteristics of the call. If this parameter is not present (and the parameter is supported) then the call is a voice call.
callCharacteristics	CallCharacteristics	O	Specifies the high level characteristics (ACD call, Priority call, etc.) associated with the call. See 12.2.4 for complete the set of possible values.
routedCallInfo	ConnectionInformation	O	Specifies the connection information associated with the routedCall connection. If this parameter is not present, then the connection information is switching function specific.
callLinkageData	CallLinkageData	C	Specifies the global call data and thread data associated with the call. This parameter is mandatory if the switching function supports the call linkage feature otherwise it shall not be provided.
subjectOfCall	SubjectOfCall	O	Specifies the subject/intent associated with the call. This could represent the subject header of an Email (text call) or intent for a voice call, for example.
messageInfo	MessageInfo	O	Specifies the contents of message information associated with a call. The message information consists of one of more items.
languagePreferences	LanguagePreferences	O	Specifies the language preferences associated with the call.
deviceHistory	DeviceHistory	O	Specifies the list of devices which were previously associated with the call (e.g. redirecting, transferring, clearing devices).
security	CSTASecurityData	O	Specifies timestamp information, message sequence number, and security information.
privateData	CSTAPrivateData	O	Specifies non-standardized information.

© ISO/IEC 2007 – All rights reserved

Copyright International Organization for Standardization
Provided by IHS under license with ISO
No reproduction or networking permitted without license from IHS
Not for Resale

20.2.4.2 Service Response

There are no service completion conditions for this service.

20.2.4.2.1 Positive Acknowledgement

There is no positive acknowledgement associated with this service.

20.2.4.2.2 Negative Acknowledgement

The negative acknowledgement error codes are described in 12.2.14, “ErrorValue”, on page 115.

20.2.4.3 Operational Model

20.2.4.3.1 Connection State Transitions

There are no connection state changes due to this service.

20.2.4.3.2 Device-Type Monitoring Event Sequences

There are no events generated as a result of this service.

20.2.4.3.3 Call-Type Monitoring Event Sequences

There are no events generated as a result of this service.

20.2.4.3.4 Functional Requirements

1. The requested route is sent from the computing function to the switching function by the Route Select service.
2. The switching function generates the routeingCrossRefID to link this service to the others that are used to provide a route.
3. The routeRegisterReqID parameter is mandatory if the switching function supports route registration, and shall not be provided otherwise. If the routeRegisterReqID parameter is not present, then the routeingCrossRefID shall be unique across the entire switching sub-domain.

20.2.5 Route Select

C → S

The Route Select service is used by the computing function to provide the destination requested by a previous Route Request or Re-Route service.

20.2.5.1 Service Request

Table 20-12 Route Select—Service Request

Parameter Name	Type	M/ O/C	Description
CrossRefIdentifier	RouteingCrossRefID	M	Specifies the cross reference identifier associated with the routeing dialogue.
routeRegisterReqID	RouteRegisterReqID	C	Specifies the route register request identifier associated with the route registration for this routeing dialogue. See Functional Requirement #3.
routeSelected	DeviceID	M	Specifies the primary selected destination of the call for which a route was requested.

© ISO/IEC 2007 – All rights reserved
--`,,```,,,,````-`-`,,`,,`,`,,`---
Copyright International Organization for Standardization
Provided by IHS under license with ISO
No reproduction or networking permitted without license from IHS
Not for Resale

Table 20-12 Route Select—Service Request (continued)

Parameter Name	Type	M/ O/C	Description
alternateRoutes	List of DeviceIDs	O	Specifies the list of alternate destinations (in priority order) which are to be used sequentially for routeing the call if the primary selected destination initially (i.e., the routeSelected parameter) or a previous entry in the list is not valid or available.

remainRetries	Choice Structure	O	Specifies either the number of alternative routes remaining or the reason why the computing function is not providing it. This shall consist of one of the following choices:
			• noListAvailable (Boolean) - indicates if the computing function does not maintain a fixed list of alternate routes:
			  • TRUE - the computing function does not maintain a list.
			  • FALSE - the computing function does maintain a list.
			• noCountAvailable (Boolean) - indicates if the computing function does not maintain or cannot provide a count of the remaining routes to try:
			  • TRUE - the computing function does not maintain or cannot provide a count.
			  • FALSE - the computing function does maintain a count.
			• retryCount (Value) - indicates the actual number of alternative routes remaining.
			See Functional Requirement #4 for more information on this parameter.

routeUsedReq	Boolean	O	Specifies whether the switching function should issue the Route Used service when it has accepted a route. • True - Route Used service should be issued. • False - Route Used service should not be issued.
correlatorData	CorrelatorData	O	Specifies the correlator data to associate with the call.
security	CSTASecurityData	O	Specifies timestamp information, message sequence number, and security information.
privateData	CSTAPrivateData	O	Specifies non-standardized information.

20.2.5.2 Service Response

There are no service completion conditions for this service.

20.2.5.2.1 Positive Acknowledgement

There is no positive acknowledgement associated with this service.

20.2.5.2.2 Negative Acknowledgement

The negative acknowledgement error codes are described in 12.2.14, “ErrorValue”, on page 115.

20.2.5.3 Operational Model

© ISO/IEC 2007 – All rights reserved

Copyright International Organization for Standardization
Provided by IHS under license with ISO
No reproduction or networking permitted without license from IHS
Not for Resale

20.2.5.3.1 Connection State Transitions

There are no connection state changes due to this service.

20.2.5.3.2 Device-Type Monitoring Event Sequences

There are no events generated as a result of this service.

20.2.5.3.3 Call-Type Monitoring Event Sequences

There are no events generated as a result of this service.

20.2.5.3.4 Functional Requirements

1. The computing function shall issue a Route Select service request only in response to a Route request or Re-Route request from the switching function.
2. The routeingCrossRefID and routeRegisterReqID (if supported) parameters from the initial Route Request service shall be used to link this service to the others that are used to provide a route.
3. The routeRegisterReqID parameter is mandatory if the switching function supports route registration, and shall not be provided otherwise.
4. If the computing function is unable to supply an actual count (retryCount) of the number of alternative routes in the remainRetries parameter, it can provide one of two other options in the parameter:
   - noListAvailable. This indicates a specific reason why the retry count is not being provided - that the computing function does not maintain a fixed list of alternate routes. For example, the alternative routes may be calculated algorithmically or by progressive database searches (i.e. returns the next entry matched to the search criterion).
   - noCountAvailable. This indicates a more general reason why the retry count is not being provided - that the computing function does not maintain or cannot provide a count of the remaining routes to try. For example, the design of the database does not enable a count of the entries left to be provided or it does not maintain a fixed list of routes.

20.2.6 Route Used

S → C

The Route Used service provides the actual destination for a call that has been routed using the Route Select service with its optional parameter that requests the route that was used.

20.2.6.1 Service Request

Table 20-13 Route Used—Service Request

Parameter Name	Type	M/ O/C	Description
crossRefIdentifier	RouteingCrossRefID	M	Specifies the cross reference identifier associated with the routeing dialogue.
routeRegisterReqID	RouteRegisterReqID	C	Specifies the route register request identifier associated with the route registration for this routeing dialogue. See Functional Requirement #4.
routeUsed	CalledDeviceID	M	Specifies the actual destination of the call for which a route was requested.
callingDevice	CallingDeviceID	O	Specifies the originator of the call.

© ISO/IEC 2007 – All rights reserved

Copyright International Organization for Standardization
Provided by IHS under license with ISO
No reproduction or networking permitted without license from IHS
Not for Resale

Table 20-13 Route Used—Service Request (continued)

Parameter Name	Type	M/ O/C	Description
domain	Boolean	O	Specifies whether the resolved destination is within the switching sub-domain. The complete set of possible values is: • True - Resolved destination is within the switching sub-domain. • False - The call has been routed outside the switching sub-domain.
correlatorData	CorrelatorData	C	Specifies the correlator data associated with the call. This parameter is mandatory if there is correlator data associated with the call (and if the parameter is supported).
callLinkageData	CallLinkageData	C	Specifies the global call data and thread data associated with the call. This parameter is mandatory if the switching function supports the call linkage feature otherwise it shall not be provided.
security	CSTASecurityData	O	Specifies timestamp information, message sequence number, and security information.
privateData	CSTAPrivateData	O	Specifies non-standardized information.

20.2.6.2 Service Response

There are no service completion conditions for this service.

20.2.6.2.1 Positive Acknowledgement

There is no positive acknowledgement associated with this service.

20.2.6.2.2 Negative Acknowledgement

The negative acknowledgement error codes are described in 12.2.14, “ErrorValue”, on page 115.

20.2.6.3 Operational Model

20.2.6.3.1 Connection State Transitions

There are no connection state changes due to this service.

20.2.6.3.2 Device-Type Monitoring Event Sequences

There are no events generated as a result of this service.

20.2.6.3.3 Call-Type Monitoring Event Sequences

There are no events generated as a result of this service.

20.2.6.3.4 Functional Requirements

1. This service is used to inform the computing function of the actual route that was used by the switching function. This route could be different than the route provided by the computing function with the Route Select service because the route could have been altered via interactions in the switching function with features such as Forwarding or ACD routeing, for example.

© ISO/IEC 2007 – All rights reserved

Copyright International Organization for Standardization
Provided by IHS under license with ISO
No reproduction or networking permitted without license from IHS
Not for Resale

2. The Route Used service should be completed via a Route End service sent by either the computing or switching functions.
3. The routeingCrossRefID and routeRegisterReqID (if supported) parameters from the initial Route Request service shall be used to link this service to the others that are used to provide a route.
4. The routeRegisterReqID parameter is mandatory if the switching function supports route registration, and shall not be provided otherwise.

21 Physical Device Features

This section describes the feature capabilities as related to the device's physical element including descriptions of:

- Physical Device Feature services
- Physical Device Feature events

General Functional Requirements

1. The device identifier supplied on each Physical Device Feature service shall be the device identifier associated with the device's physical element. Otherwise, the request is rejected with a negative acknowledgement.
2. Some switching functions may reject certain services if there is not a call at a device. For example, the Set Speaker Volume service may be rejected if there is no call at a device.

21.1 Services

Table 21-1 Physical Device Feature Services Summary

Physical Device Feature Service	Description	Pg.
21.1.1 Button Press	Simulates the activation of a specified button on a device.	415
21.1.2 Get Auditory Apparatus Information	Get information on one or all auditory apparatuses at a specified device.	416
21.1.3 Get Button Information	Get the button information for either a specified button or all buttons on a device.	419
21.1.4 Get Display	Get a snapshot of the contents of the physical device's display.	420
21.1.5 Get Hookswitch Status	Get the hookswitch status of a specified device.	422
21.1.6 Get Lamp Information	Get the lamp information for either a specified lamp or all lamps on a device.	419
21.1.7 Get Lamp Mode	Get the lamp mode status of a specified button on a device.	426
21.1.8 Get Message Waiting Indicator	Get the message waiting status at a specified device.	428
21.1.9 Get Microphone Gain	Get the microphone gain setting at a specified device.	429
21.1.10 Get Microphone Mute	Get the microphone mute status at a specified device.	430
21.1.11 Get Ringer Status	Get the ringer status (ringing/not ringing, ring count, ring pattern, ring volume) of one or all ringers associated with a device.	432
21.1.12 Get Speaker Mute	Get the speaker mute status of a specified device.	434
21.1.13 Get Speaker Volume	Get the speaker volume setting of a specified device.	435
21.1.14 Set Button Information	Set the button information of a specified button on a device.	436
21.1.15 Set Display	Set the display on a specified device.	437
21.1.16 Set Hookswitch Status	Set the hookswitch status of a specified device.	440

--`,,```,,,,````-`-`,,`,,`,`,,`---
© ISO/IEC 2007 – All rights reserved
Copyright International Organization for Standardization
Provided by IHS under license with ISO
No reproduction or networking permitted without license from IHS
Not for Resale

Table 21-1 Physical Device Feature Services Summary (continued)

Physical Device Feature Service	Description	Pg.
21.1.17 Set Lamp Mode	Set the lamp mode status of a specified button on a device.	441
21.1.18 Set Message Waiting Indicator	Set the message waiting status of a specified device.	442
21.1.19 Set Microphone Gain	Set the microphone gain setting of a specified device.	444
21.1.20 Set Microphone Mute	Set the microphone mute status of a specified device.	445
21.1.21 Set Ringer Status	Set the specified ringer to ring or not to ring. May also be used to set the ring pattern and ring volume of a ringer at a specified device.	446
21.1.22 Set Speaker Mute	Set the speaker mute status of a specified device.	448
21.1.23 Set Speaker Volume	Set the speaker volume setting of a specified device.	449

21.1.1 Button Press

C ⟶ S

The Button Press service allows a computing function to simulate the activation of a specified button at a specified device.

The button model is described in 6.1.1.1.3, “Button”, on page 15.

21.1.1.1 Service Request

Table 21-2 Button Press—Service Request

Parameter Name	Type	M/ O/C	Description
device	DeviceID	M	Specifies the device’s physical element.
button	ButtonID	M	Specifies the button on the device. See 12.3.5, “ButtonID”, on page 140 for reserved button assignments.
security	CSTASecurityData	O	Specifies timestamp information, message sequence number, and security information.
privateData	CSTAPrivateData	O	Specifies non-standardized information.

21.1.1.2 Service Response

The capability exchange services describe the type of acknowledgement model (atomic or multi-step) that the switching function supports for this service request.

21.1.1.2.1 Positive Acknowledgement

Table 21-3 Button Press—Positive Acknowledgement

Parameter Name	Type	M/ O/C	Description
security	CSTASecurityData	O	Specifies timestamp information, message sequence number, and security information.
privateData	CSTAPrivateData	O	Specifies non-standardized information.

21.1.1.2.2 Negative Acknowledgement

The negative acknowledgement error codes are described in 12.2.14, “ErrorValue”, on page 115.

© ISO/IEC 2007 – All rights reserved

Copyright International Organization for Standardization
Provided by IHS under license with ISO
No reproduction or networking permitted without license from IHS
Not for Resale

21.1.1.3 Operational Model

21.1.1.3.1 Connection State Transitions

There are no connection state changes due to this service.

21.1.1.3.2 Device-Type Monitoring Event Sequences

Table 21-4 Button Press—Device-Type Monitoring Event Sequences

Monitored Device	Event
D1 (device)	Button Press

21.1.1.3.3 Call-Type Monitoring Event Sequences

If the monitor object is a device, if supported, the monitoring event sequence is the same as the Device-Type Monitoring event sequence.

21.1.1.3.4 Functional Requirements

1. A Button Press could initiate any potential call sequences, but these sequences would appear as manually initiated activities equivalent to a user pressing the given button on the set. Invoking a speed-dial button is an example of a common use for the Button Press service.

21.1.2 Get Auditory Apparatus Information C → S

The Get Auditory Apparatus Information service provides information about one or more auditory apparatuses at a device.

21.1.2.1 Service Request

Table 21-5 Get Auditory Apparatus Information—Service Request

Parameter Name	Type	M/ O/C	Description
device	DeviceID	M	Specifies the device's physical element.
auditoryApparatus	AuditoryApparatusID	O	Specifies which auditory apparatus to query. If not provided, then information is obtained on all the auditory apparatuses associated with the device.
security	CSTASecurityData	O	Specifies timestamp information, message sequence number, and security information.
privateData	CSTAPrivateData	O	Specifies non-standardized information.

21.1.2.2 Service Response

This service follows the atomic acknowledgement model for this service request.

© ISO/IEC 2007 – All rights reserved
--`,,```,,,,````-`-`,,`,,`,`,,`---
Copyright International Organization for Standardization
Provided by IHS under license with ISO
No reproduction or networking permitted without license from IHS
Not for Resale

21.1.2.2.1 Positive Acknowledgement

Table 21-6 Get Auditory Apparatus Information—Positive Acknowledgement

Parameter Name	Type	M/ O/C	Description

auditoryApparatusList	List of Structures	M	Specifies information about the specified auditory apparatus or about all apparatuses associated with the device if no auditoryApparatus was provided in the request. Each entry contains the following:
			• auditoryApparatus (M) AuditoryApparatusID -This parameter indicates the auditory apparatus to which the other provided information applies.
			• auditoryApparatusType (M) Enumerated -This parameter indicates the auditory apparatus type. The complete set of possible values is:
			  • Speakerphone - Designates a logical hookswitch associated with a speakerphone.
			  • Handset - Designates a physical hookswitch associated with a typical telephone handset that is operated (i.e., “opened” and “closed”) by manually lifting the handset from, and replacing it in, a handset cradle.
			  • Headset - Designates a logical hookswitch associated with a headset.
			  • SpeakerOnlyPhone - Designates a logical hookswitch associated with a speaker-only phone.
			  • Other - not one of the above values.
			• speaker (M) Bitmap - Specifies information about the speaker associated with this auditory apparatus. Multiple bits may be set:
			  • present - If the bit is TRUE, then a speaker is associated with this auditory apparatus.
			  • volumeSettable - If the bit is TRUE, then the speaker’s volume can be set.
			(continued)

© ISO/IEC 2007 – All rights reserved

Copyright International Organization for Standardization
Provided by IHS under license with ISO
No reproduction or networking permitted without license from IHS
Not for Resale

Table 21-6 Get Auditory Apparatus Information—Positive Acknowledgement (continued)

Parameter Name	Type	M/ O/C	Description
auditoryApparatusList (continued)	(continued)	M	• volumeReadable - If the bit is TRUE, then the speaker's volume can be read. • muteSettable - If the bit is TRUE, then the speaker's mute status can be set. • muteReadable - If the bit is TRUE, then the speaker's mute status can be read. • microphone (M) Bitmap - Specifies information about the microphone associated with this auditory apparatus: • present - If the bit is TRUE, then a microphone is associated with this auditory apparatus. • gainSettable - If the bit is TRUE, then the microphone's gain can be set. • gainReadable - If the bit is TRUE, then the microphone's gain can be read. • muteSettable - If the bit is TRUE, then the microphone's mute status can be set. • muteReadable - If the bit is TRUE, then the microphone's mute status can be read. • hookswitch (M) Bitmap - Specifies information about the hookswitch associated with this auditory apparatus: • hookswitchSettable - If the bit is TRUE, then the hookswitch status can be set. • hookswitchOnHook - If the bit is TRUE, then the hookswitch associated with this auditory apparatus is currently on-hook (hookswitchOnHook = TRUE) or off-hook (hookswitchOnHook = FALSE). • hookswitchID (M) HookswitchID - Indicates the hookswitchID of the hookswitch which is associated with this auditory apparatus. Note that a given hookswitch can be associated with multiple auditory apparatuses.
security	CSTASecurityData	O	Specifies timestamp information, message sequence number, and security information.
privateData	CSTAPrivateData	O	Specifies non-standardized information.

21.1.2.2.2 Negative Acknowledgement

The negative acknowledgement error codes are described in 12.2.14, "ErrorValue", on page 115.

21.1.2.3 Operational Model

21.1.2.3.1 Connection State Transitions

There are no connection state changes due to this service.

21.1.2.3.2 Device-Type Monitoring Event Sequences

There are no events generated as a result of this service.

--`,,```,,,,````-`-`,,`,,`,`,,`---
© ISO/IEC 2007 – All rights reserved
Copyright International Organization for Standardization
Provided by IHS under license with ISO
No reproduction or networking permitted without license from IHS
Not for Resale

21.1.2.3.3 Call-Type Monitoring Event Sequences

There are no events generated as a result of this service.

21.1.3 Get Button Information C ⟶ S

The Get Button Information service provides information about the specified button or buttons on a device.

21.1.3.1 Service Request

Table 21-7 Get Button Information—Service Request

Parameter Name	Type	M/ O/C	Description
device	DeviceID	M	Specifies the device's physical element.
button	ButtonID	O	Specifies which button to query. If not provided, then information is obtained on all the buttons associated with the device.
security	CSTASecurityData	O	Specifies timestamp information, message sequence number, and security information.
privateData	CSTAPrivateData	O	Specifies non-standardized information.

21.1.3.2 Service Response

This service follows the atomic acknowledgement model for this service request.

© ISO/IEC 2007 – All rights reserved

Copyright International Organization for Standardization
Provided by IHS under license with ISO
No reproduction or networking permitted without license from IHS
Not for Resale

21.1.3.2.1 Positive Acknowledgement

Table 21-8 Get Button Information—Positive Acknowledgement

Parameter Name	Type	M/ O/C	Description
buttonList	List of Structures	M	Specifies information about the specified button or about all buttons associated with the device if no button was provided in the request. Each entry contains the following: • button (M) ButtonID - Specifies the buttonID of the button described by this entry. • buttonLabel (O) Characters - The label by which a button may be referenced. The maximum length supported by the switching function is provided via the capabilities exchange services. • buttonLabelSettable (O) Boolean - If the bit is TRUE the button label can be set by the Set Button Information service. • buttonFunction (O) Characters - The function assigned to the button. • buttonAssociatedNumber (O) DeviceID - This indicates a number (in Diallable Digits format) associated with this button. • buttonAssociatedNumberSettable (O) Boolean - If the bit is TRUE a number can be associated with this button via the Set Button Information service. • buttonPressIndicator (O) Boolean - If the bit is TRUE (default) the button can be pressed via the Button Press service. • lampList (O) List of LampIDs - These are the lamps that are associated with the button. If the list is empty, then there are no lamps associated with this button.
security	CSTASecurityData	O	Specifies timestamp information, message sequence number, and security information.
privateData	CSTAPrivateData	O	Specifies non-standardized information.

21.1.3.2.2 Negative Acknowledgement

The negative acknowledgement error codes are described in 12.2.14, “ErrorValue”, on page 115.

21.1.3.3 Operational Model

21.1.3.3.1 Connection State Transitions

There are no connection state changes due to this service.

21.1.3.3.2 Device-Type Monitoring Event Sequences

There are no events generated as a result of this service.

21.1.3.3.3 Call-Type Monitoring Event Sequences

There are no events generated as a result of this service.

21.1.4 Get Display

C → S

The Get Display service provides a snapshot of the contents of the device’s display.

© ISO/IEC 2007 – All rights reserved

Copyright International Organization for Standardization
Provided by IHS under license with ISO
No reproduction or networking permitted without license from IHS
Not for Resale

The capabilities exchange services can be used to determine the number of displays associated with a device.

21.1.4.1 Service Request

Table 21-9 Get Display—Service Request

Parameter Name	Type	M/ O/C	Description
device	DeviceID	M	Specifies the device's physical element.
displayID	DisplayID	O	Specifies which display to query. If not provided, then information is obtained on all the displays associated with the device.
security	CSTASecurityData	O	Specifies timestamp information, message sequence number, and security information.
privateData	CSTAPrivateData	O	Specifies non-standardized information.

21.1.4.2 Service Response

This service follows the atomic acknowledgement model for this service request.

21.1.4.2.1 Positive Acknowledgement

Table 21-10 Get Display—Positive Acknowledgement

Parameter Name	Type	M/ O/C	Description
displayList	List of Structures	M	Specifies information about the specified display or about all displays associated with the device if no displayID was provided in the request. Each entry contains the following: • displayID (M) DisplayID - This parameter indicates the display to which the other provided information applies. • logicalRows (M) Value - The number of rows on the logical display. • logicalColumns (M) Value - The number of columns on the logical display. • physicalRows (C) Value - The number of rows on the physical display. When the number of physical Rows is equal to the number of logical Rows this parameter shall be omitted, otherwise it shall be present. • physicalColumns (C) Value - The number of columns on the physical display. When the number of physicalColumns is equal to the number of logicalColumns this parameter shall be omitted, otherwise it shall be present. • physicalBaseRowNumber (C) Value - The row number of the physical base, i.e. the logical row that appears at the first row of the physical display. When the number of physicalRows is equal to the number of logicalRows this parameter shall be omitted, otherwise it shall be present. (continued)

© ISO/IEC 2007 – All rights reserved

Copyright International Organization for Standardization
Provided by IHS under license with ISO
No reproduction or networking permitted without license from IHS
Not for Resale

Table 21-10 Get Display—Positive Acknowledgement (continued)

Parameter Name	Type	M/ O/C	Description

displayList
(continued)
	(continued)	M	• physicalBaseColumnNumber (C) Value - The column number of the physical base, i.e. the logical column that appears at the first column of the physical display. When the number of physicalColumns is equal to the number of logicalColumns this parameter shall be omitted, otherwise it shall be present.
			• characterSet (O) Enumerated - Specifies the character set which is being used to represent the text on the display. The complete set of possible values is:
			  • ASCII (default)
			  • Unicode
			  • Proprietary
			• contentsOfDisplay (M) Characters - Specifies the text on display as a string of characters consisting of the text on each row of the display (including spaces) concatenated together.

security	CSTASecurityData	O	Specifies timestamp information, message sequence number, and security information.
privateData	CSTAPrivateData	O	Specifies non-standardized information.

21.1.4.2.2 Negative Acknowledgement

The negative acknowledgement error codes are described in 12.2.14, “ErrorValue”, on page 115.

21.1.4.3 Operational Model

21.1.4.3.1 Connection State Transitions

There are no connection state changes due to this service.

21.1.4.3.2 Device-Type Monitoring Event Sequences

There are no events generated as a result of this service.

21.1.4.3.3 Call-Type Monitoring Event Sequences

There are no events generated as a result of this service.

21.1.4.3.4 Functional Requirements

1. The contentsOfDisplay parameter always contains the maximum number of characters on the display as indicated by the number of logicalRows and logicalColumns.

21.1.5 Get Hookswitch Status C → S

This Get Hookswitch Status service provides the hookswitch status of one or more hookswitches associated with a specified device. The hookswitch status indicates which hookswitches are present on a device and which hookswitches are currently off-hook.

© ISO/IEC 2007 – All rights reserved

Copyright International Organization for Standardization
Provided by IHS under license with ISO
No reproduction or networking permitted without license from IHS
Not for Resale

21.1.5.1 Service Request

Table 21-11 Get Hookswitch Status—Service Request

Parameter Name	Type	M/ O/C	Description
device	DeviceID	M	Specifies the device's physical element.
hookswitch	HookSwitchID	O	Specifies which hookswitch to query. If not provided, then information is obtained on all the hookswitches associated with the device.
security	CSTASecurityData	O	Specifies timestamp information, message sequence number, and security information.
privateData	CSTAPrivateData	O	Specifies non-standardized information.

21.1.5.2 Service Response

This service follows the atomic acknowledgement model for this service request.

21.1.5.2.1 Positive Acknowledgement

Table 21-12 Get Hookswitch Status—Positive Acknowledgement

Parameter Name	Type	M/ O/C	Description

hookswitchStatusList	List of Structures	M	Specifies information about the specified hookswitch or about all hookswitches associated with the device if no hookswitch was provided in the request. Each entry contains the following:
			• hookswitch (M) HookswitchID - Indicates the hookswitch whose status is reported.
			• hookswitchOnHook (M) Boolean - Indicates the state of the hookswitch. The complete set of possible values is:
			  • TRUE - Indicates that the switch is onhook.
			  • FALSE - Indicates that the switch is offhook.

security	CSTASecurityData	O	Specifies timestamp information, message sequence number, and security information.
privateData	CSTAPrivateData	O	Specifies non-standardized information.

21.1.5.2.2 Negative Acknowledgement

The negative acknowledgement error codes are described in 12.2.14, "ErrorValue", on page 115.

21.1.5.3 Operational Model

21.1.5.3.1 Connection State Transitions

There are no connection state changes due to this service.

21.1.5.3.2 Device-Type Monitoring Event Sequences

There are no events generated as a result of this service.

© ISO/IEC 2007 – All rights reserved

Copyright International Organization for Standardization
Provided by IHS under license with ISO
No reproduction or networking permitted without license from IHS
Not for Resale

21.1.5.3.3 Call-Type Monitoring Event Sequences

There are no events generated as a result of this service.

21.1.6 Get Lamp Information C ⟶ S

The Get Lamp Information service provides information about the specified lamp(s) on a device and if the specified lamp(s) is currently lit.

21.1.6.1 Service Request

Table 21-13 Get Lamp Information—Service Request

Parameter Name	Type	M/ O/C	Description
device	DeviceID	M	Specifies the device's physical element.
lamp	LampID	O	Specifies which lamp to query. If not provided, then information is obtained on all the lamps associated with the device.
security	CSTASecurityData	O	Specifies timestamp information, message sequence number, and security information.
privateData	CSTAPrivateData	O	Specifies non-standardized information.

21.1.6.2 Service Response

This service follows the atomic acknowledgement model for this service request.

© ISO/IEC 2007 – All rights reserved

Copyright International Organization for Standardization
Provided by IHS under license with ISO
No reproduction or networking permitted without license from IHS
Not for Resale

21.1.6.2.1 Positive Acknowledgement

Table 21-14 Get Lamp Information—Positive Acknowledgement

Parameter Name	Type	M/ O/C	Description

lampList	List of Structures	M	Specifies information about the specified lamp or about all lamps associated with the device if no lamp was provided in the request. Each entry contains the following:
			• lamp (M) LampID - Indicates the lampID of this lamp.
			• lampLabel (O) Characters - The label by which a lamp may be referenced. The maximum length supported by the switching function is provided via the capabilities exchange services.
			• button (O) ButtonID -Specifies a button that is associated with this lamp. If not present, then a button is not associated with this lamp.
			• lampColor (O) Value - A value from 0 - 100 specifying the color of the lamp. The meaning of the following values are pre-assigned:
			  • 0 - no color
			  • 1 - Red
			  • 2 - Yellow
			  • 3 - Green
			  • 4 - Blue
			  • 5 - Unknown (the switching function cannot determine the color of the lamp) (default if this parameter is not present).
			All other values (6-100) are switching function specific.

security	CSTASecurityData	O	Specifies timestamp information, message sequence number, and security information.
privateData	CSTAPrivateData	O	Specifies non-standardized information.

21.1.6.2.2 Negative Acknowledgement

The negative acknowledgement error codes are described in 12.2.14, “ErrorValue”, on page 115.

21.1.6.3 Operational Model

21.1.6.3.1 Connection State Transitions

There are no connection state changes due to this service.

21.1.6.3.2 Device-Type Monitoring Event Sequences

There are no events generated as a result of this service.

21.1.6.3.3 Call-Type Monitoring Event Sequences

There are no events generated as a result of this service.

© ISO/IEC 2007 – All rights reserved --`,,```,,,,````-`-`,,`,,`,`,,`---

Copyright International Organization for Standardization
Provided by IHS under license with ISO
No reproduction or networking permitted without license from IHS Not for Resale

21.1.6.3.4 Functional Requirements

1. If the computing function requests all lamps associated with a given device, then this will include both lamps with or without buttons associated with them.

21.1.7 Get Lamp Mode

C ⟶ S

The Get Lamp Mode service provides the lamp mode status.

21.1.7.1 Service Request

Table 21-15 Get Lamp Mode—Service Request

Parameter Name	Type	M/ O/C	Description
device	DeviceID	M	Specifies the device's physical element.
lamp	LampID	O	Specifies which lamp to query. If not provided, then information is obtained on all the lamps associated with the device.
security	CSTASecurityData	O	Specifies timestamp information, message sequence number, and security information.
privateData	CSTAPrivateData	O	Specifies non-standardized information.

21.1.7.2 Service Response

This service follows the atomic acknowledgement model for this service request.

© ISO/IEC 2007 – All rights reserved

Copyright International Organization for Standardization
Provided by IHS under license with ISO
No reproduction or networking permitted without license from IHS
Not for Resale

21.1.7.2.1 Positive Acknowledgement

Table 21-16 Get Lamp Mode—Positive Acknowledgement

Parameter Name	Type	M/ O/C	Description

lampModeList	List of Structures	M	Specifies information about the specified lamp or about all lamps associated with the device if no lamp was provided in the request. Each entry contains the following:
			• lamp (M) LampID - Indicates the lampID of this lamp.
			• lampMode (M) Value - A value from 0 - 100 specifying how the lamp is lit. The complete set of possible values is:
			  • 0 - Brokenflutter. Superposition of wink and flutter.
			  • 1 - Flutter. Fast on and off.
			  • 2 - Off. Lamp is off.
			  • 3 - Steady. Lamp is continuously lit.
			  • 4 - Wink. Lamp is winking.
			  • 5 - Unknown (the switching function cannot determine the mode of the lamp)
			  • All other values (6-100) are switching function specific.
			• lampBrightness (O) Enumerated - Indicates the intensity of lamp if the lamp is on (as indicated by lampMode parameter). Actual visible brightness levels are lamp-dependent. The complete set of possible values is:
			  • Unspecified/Normal (default)
			  • Dim
			  • Bright
			• lampColor (O) Value - A value from 0 - 100 specifying the color of the lamp. The meaning of the following values are pre-assigned:
			  • 0 - no color
			  • 1 - Red
			  • 2 - Yellow
			  • 3 - Green
			  • 4 - Blue
			  • 5 - Unknown (the switching function cannot determine the color of the lamp) (default if this parameter is not present).
			  • All other values (6-100) are switching function specific.
			• button (O) ButtonID - Specifies a button that is associated with this lamp. If not present, then a button is not associated with this lamp.

lamp	LampID	O	Specifies the lamp identifier associated with the lamp.
security	CSTASecurityData	O	Specifies timestamp information, message sequence number, and security information.
privateData	CSTAPrivateData	O	Specifies non-standardized information.

21.1.7.2.2 Negative Acknowledgement

The negative acknowledgement error codes are described in 12.2.14, “ErrorValue”, on page 115.

--`,,```,,,,````-`-`,,`,,`,`,,`---

Copyright International Organization for Standardization
Provided by IHS under license with ISO
No reproduction or networking permitted without license from IHS Not for Resale

21.1.7.3 Operational Model

21.1.7.3.1 Connection State Transitions

There are no connection state changes due to this service.

21.1.7.3.2 Device-Type Monitoring Event Sequences

There are no events generated as a result of this service.

21.1.7.3.3 Call-Type Monitoring Event Sequences

There are no events generated as a result of this service.

21.1.8 Get Message Waiting Indicator

C → S

The Get Message Waiting Indicator service provides the message waiting feature status at a specified device. The message waiting feature is typically used to notify a user (typically via a dedicated lamp on a phone device) when messages are available.

21.1.8.1 Service Request

Table 21-17 Get Message Waiting Indicator—Service Request

Parameter Name	Type	M/ O/C	Description
device	DeviceID	M	Specifies the device's physical element.
security	CSTASecurityData	O	Specifies timestamp information, message sequence number, and security information.
privateData	CSTAPrivateData	O	Specifies non-standardized information.

21.1.8.2 Service Response

This service follows the atomic acknowledgement model for this service request.

21.1.8.2.1 Positive Acknowledgement

Table 21-18 Get Message Waiting Indicator—Positive Acknowledgement

Parameter Name	Type	M/ O/C	Description
messageWaitingOn	Boolean	M	Specifies the value of the requested feature. The complete set of possible values is: • FALSE - Message waiting off. • TRUE - Message waiting on.
deviceForMessage	DeviceID	O	Specifies the device where the message is waiting.
lampIsPresent	Boolean	O	Specifies the value of the requested feature, based on the messageWaitingOn parameter. The complete set of possible values is: • FALSE - Lamp is not present. • TRUE - Lamp is present.
security	CSTASecurityData	O	Specifies timestamp information, message sequence number, and security information.
privateData	CSTAPrivateData	O	Specifies non-standardized information.

© ISO/IEC 2007 – All rights reserved
Copyright International Organization for Standardization
Provided by IHS under license with ISO
No reproduction or networking permitted without license from IHS
Not for Resale

21.1.8.2.2 Negative Acknowledgement

The negative acknowledgement error codes are described in 12.2.14, “ErrorValue”, on page 115.

21.1.8.3 Operational Model

21.1.8.3.1 Connection State Transitions

There are no connection state changes due to this service.

21.1.8.3.2 Device-Type Monitoring Event Sequences

There are no events generated as a result of this service.

21.1.8.3.3 Call-Type Monitoring Event Sequences

There are no events generated as a result of this service.

21.1.9 Get Microphone Gain

C ⟶ S

The Get Microphone Gain service provides the microphone gain setting (input level) for a microphone associated with a particular auditory apparatus at a specified device.

21.1.9.1 Service Request

Table 21-19 Get Microphone Gain—Service Request

Parameter Name	Type	M/ O/C	Description
device	DeviceID	M	Specifies the device’s physical element.
auditoryApparatus	AuditoryApparatusID	O	Specifies which auditory apparatus to query. If not provided, then information is obtained on all the auditory apparatuses associated with the device.
security	CSTASecurityData	O	Specifies timestamp information, message sequence number, and security information.
privateData	CSTAPrivateData	O	Specifies non-standardized information.

21.1.9.2 Service Response

This service follows the atomic acknowledgement model for this service request.

© ISO/IEC 2007 – All rights reserved

Copyright International Organization for Standardization
Provided by IHS under license with ISO
No reproduction or networking permitted without license from IHS
Not for Resale

21.1.9.2.1 Positive Acknowledgement

Table 21-20 Get Microphone Gain—Positive Acknowledgement

Parameter Name	Type	M/ O/C	Description
microphoneGainList	List of Structures	M	Specifies information about the specified auditory apparatus or about all auditory apparatuses associated with the device if no auditoryApparatus was provided in the request. Each entry contains the following: • auditoryApparatus (M) AuditoryApparatusID - Specifies the auditory apparatus that the microphone belongs to. • micGainAbs (O) Value - Specifies the microphone gain. A value of 0 indicates silence, and 100 indicates maximum gain. The granularity and quantization of the values 1 though 99 are device specific. If this component is not provided, the absolute gain value is unknown.
security	CSTASecurityData	O	Specifies timestamp information, message sequence number, and security information.
privateData	CSTAPrivateData	O	Specifies non-standardized information.

21.1.9.2.2 Negative Acknowledgement

The negative acknowledgement error codes are described in 12.2.14, “ErrorValue”, on page 115.

21.1.9.3 Operational Model

21.1.9.3.1 Connection State Transitions

There are no connection state changes due to this service.

21.1.9.3.2 Device-Type Monitoring Event Sequences

There are no events generated as a result of this service.

21.1.9.3.3 Call-Type Monitoring Event Sequences

There are no events generated as a result of this service.

21.1.10 Get Microphone Mute

C ⟶ S

The Get Microphone Mute service provides the microphone mute feature status of a microphone associated with an auditory apparatus at a specified device.

While a device’s microphone is muted, no audio information is transmitted over the device microphone. This feature is used when it is desired to prevent the other party(s) in a call from hearing a conversation through the device.

--`,,```,,,,````-`-`,,`,,`,`,,`---

© ISO/IEC 2007 – All rights reserved

Copyright International Organization for Standardization
Provided by IHS under license with ISO
No reproduction or networking permitted without license from IHS

Not for Resale

21.1.10.1 Service Request

Table 21-21 Get Microphone Mute—Service Request

Parameter Name	Type	M/ O/C	Description
device	DeviceID	M	Specifies the device's physical element.
auditoryApparatus	AuditoryApparatusID	O	Specifies which auditory apparatus to query. If not provided, then information is obtained on all the auditory apparatuses associated with the device.
security	CSTASecurityData	O	Specifies timestamp information, message sequence number, and security information.
privateData	CSTAPrivateData	O	Specifies non-standardized information.

21.1.10.2 Service Response

This service follows the atomic acknowledgement model for this service request.

21.1.10.2.1 Positive Acknowledgement

Table 21-22 Get Microphone Mute—Positive Acknowledgement

Parameter Name	Type	M/ O/C	Description

microphoneMuteList	List of Structures	M	Specifies information about the specified auditory apparatus or about all auditory apparatuses associated with the device if no auditoryApparatus was provided in the request. Each entry contains the following:
			• auditoryApparatus (M) AuditoryApparatusID - Specifies the auditory apparatus that the microphone belongs to.
			• microphoneMuteOn (M) Boolean - Specifies whether the microphone is muted or not. The complete set of possible values is:
			  • FALSE - Microphone is activated.
			  • TRUE - Microphone is muted.

security	CSTASecurityData	O	Specifies timestamp information, message sequence number, and security information.
privateData	CSTAPrivateData	O	Specifies non-standardized information.

21.1.10.2.2 Negative Acknowledgement

The negative acknowledgement error codes are described in 12.2.14, “ErrorValue”, on page 115.

21.1.10.3 Operational Model

21.1.10.3.1 Connection State Transitions

There are no connection state changes due to this service.

21.1.10.3.2 Device-Type Monitoring Event Sequences

There are no events generated as a result of this service.

© ISO/IEC 2007 – All rights reserved

Copyright International Organization for Standardization
Provided by IHS under license with ISO
No reproduction or networking permitted without license from IHS
Not for Resale

21.1.10.3.3 Call-Type Monitoring Event Sequences

There are no events generated as a result of this service.

21.1.11 Get Ringer Status C → S

The Get Ringer Status service provides the ringer status of one or all ringers associated with a specific device.

This allows a computing function to determine if a ringer is engaged in a ringing cycle, the number of ring cycles that it has been ringing, and the ring pattern and ring volume settings.

21.1.11.1 Service Request

Table 21-23 Get Ringer Status—Service Request

Parameter Name	Type	M/ O/C	Description
device	DeviceID	M	Specifies the device's physical element.
ringer	RingerID	O	Specifies which ringer to query. If not provided, then information is obtained on all the ringers associated with the device.
security	CSTASecurityData	O	Specifies timestamp information, message sequence number, and security information.
privateData	CSTAPrivateData	O	Specifies non-standardized information.

21.1.11.2 Service Response

This service follows the atomic acknowledgement model for this service request.

© ISO/IEC 2007 – All rights reserved

Copyright International Organization for Standardization
Provided by IHS under license with ISO
No reproduction or networking permitted without license from IHS
Not for Resale

21.1.11.2.1 Positive Acknowledgement

Table 21-24 Get Ringer Status—Positive Acknowledgement

Parameter Name	Type	M/ O/C	Description

ringerStatusList	List of Structures	M	Specifies information about the specified ringer or about all ringers associated with the device if no ringer was provided in the request. Each entry contains the following components:
			• ringer (M) RingerID - Indicates the ringerID.
			• ringMode (M) Enumerated - Indicates if the ringer is in a ringing cycle. The complete set of possible values is:
			  • ringing - The ringer is ringing (provided when either the ringer is physically ringing or is in the “quiet phase” of a ring cycle)
			  • not ringing - The ringer is not being rung.
			• ringCount (O) Value - Indicates the value (0...1000) of the number of complete ring cycles that the ringer has been, or was, ringing. The values 0-999 indicate the actual number of complete ring cycles. The value of 1000 indicates that a value greater than 999 was reached.
			• ringDuration(O) Value - Indicates the time (in seconds) that the ringer has been ringing, ringDuration should not be provided if ringCount is provided.
			• ringPattern (O) Value - Indicates the value of the ringing pattern of the ringer. The meaning of ringing patterns and the number of supported patterns is device specific.
			The ring pattern is associated with the ringer until reset by the switching function or until reset by the Set Ringer Status service.
			• ringVolAbs (O) Value - Indicates the absolute volume level (0...100) of the ringer. The ring volume is associated with the ringer until reset by the switching function or until reset by the Set Ringer Status service. A value of 0 indicates silence, and 100 indicates maximum volume. The granularity and quantization of the values 1 though 99 are device specific. If this component is not provided, the absolute ringer volume is unknown. Note that the relationship between the ringer volume and loudness is ringer specific.

security	CSTASecurityData	O	Specifies timestamp information, message sequence number, and security information.
privateData	CSTAPrivateData	O	Specifies non-standardized information.

21.1.11.2.2 Negative Acknowledgement

The negative acknowledgement error codes are described in 12.2.14, “ErrorValue”, on page 115.

21.1.11.3 Operational Model

21.1.11.3.1 Connection State Model Transitions

There are no connection state changes due to this service.

© ISO/IEC 2007 – All rights reserved

Copyright International Organization for Standardization
Provided by IHS under license with ISO
No reproduction or networking permitted without license from IHS
Not for Resale

21.1.11.3.2 Device-Type Monitoring Event Sequences

There are no events generated as a result of this service.

21.1.11.3.3 Call-Type Monitoring Event Sequences

There are no events generated as a result of this service.

21.1.12 Get Speaker Mute

C → S

The Get Speaker Mute service provides the speaker mute feature status for speakers associated with one or more auditory apparatuses at a specified device.

While a device's speaker is muted, no audio information is transmitted over the speaker.

21.1.12.1 Service Request

Table 21-25 Get Speaker Mute—Service Request

Parameter Name	Type	M/ O/C	Description
device	DeviceID	M	Specifies the device's physical element.
auditoryApparatus	AuditoryApparatusID	O	Specifies which auditory apparatus to query. If not provided, then information is obtained on all the auditory apparatuses associated with the device.
security	CSTASecurityData	O	Specifies timestamp information, message sequence number, and security information.
privateData	CSTAPrivateData	O	Specifies non-standardized information.

21.1.12.2 Service Response

This service follows the atomic acknowledgement model for this service request.

21.1.12.2.1 Positive Acknowledgement

Table 21-26 Get Speaker Mute—Positive Acknowledgement

Parameter Name	Type	M/ O/C	Description

speakerMuteList	List of Structures	M	Specifies information about the specified auditory apparatus or about all auditory apparatuses associated with the device if no auditoryApparatus was provided in the request. Each entry contains the following:
			• auditoryApparatus (M) AuditoryApparatusID - Specifies the auditory apparatus to which this speaker belongs.
			• speakerMuteOn (M) Boolean - Specifies whether the speaker mute setting is on or not. The complete set of possible values is:
			  • FALSE - Mute is off (i.e., speaker is activated).
			  • TRUE - Mute is on (i.e., speaker is muted).

security	CSTASecurityData	O	Specifies timestamp information, message sequence number, and security information.
privateData	CSTAPrivateData	O	Specifies non-standardized information.

© ISO/IEC 2007 – All rights reserved

Copyright International Organization for Standardization
Provided by IHS under license with ISO
No reproduction or networking permitted without license from IHS
Not for Resale

21.1.12.2.2 Negative Acknowledgement

The negative acknowledgement error codes are described in 12.2.14, “ErrorValue”, on page 115.

21.1.12.3 Operational Model

21.1.12.3.1 Connection State Transitions

There are no connection state changes due to this service.

21.1.12.3.2 Device-Type Monitoring Event Sequences

There are no events generated as a result of this service.

21.1.12.3.3 Call-Type Monitoring Event Sequences

There are no events generated as a result of this service.

21.1.13 Get Speaker Volume

C ⟶ S

The Get Speaker Volume service provides the speaker volume setting for the speakers associated with one or more auditory apparatuses at a specified device.

21.1.13.1 Service Request

Table 21-27 Get Speaker Volume—Service Request

Parameter Name	Type	M/ O/C	Description
device	DeviceID	M	Specifies the device’s physical element.
auditoryApparatus	AuditoryApparatusID	O	Specifies which auditory apparatus to query. If not provided, then information is obtained on all the auditory apparatuses associated with the device.
security	CSTASecurityData	O	Specifies timestamp information, message sequence number, and security information.
privateData	CSTAPrivateData	O	Specifies non-standardized information.

21.1.13.2 Service Response

This service follows the atomic acknowledgement model for this service request.

© ISO/IEC 2007 – All rights reserved

Copyright International Organization for Standardization
Provided by IHS under license with ISO
No reproduction or networking permitted without license from IHS
Not for Resale

21.1.13.2.1 Positive Acknowledgement

Table 21-28 Get Speaker Volume—Positive Acknowledgement

Parameter Name	Type	M/ O/C	Description
speakerVolumeList	List of Structures	M	Specifies information about the specified auditory apparatus or about all auditory apparatuses associated with the device if no auditoryApparatus was provided in the request. Each entry contains the following: • auditoryApparatus (M) AuditoryApparatusID - Specifies the auditory apparatus to which this speaker belongs. • speakerVolAbs (O) Value - Specifies the absolute speaker volume. A value of 0 indicates silence, and 100 indicates maximum volume. The granularity and quantization of the values 1 though 99 are device specific. If this component is not provided, the absolute speaker volume is unknown.
security	CSTASecurityData	O	Specifies timestamp information, message sequence number, and security information.
privateData	CSTAPrivateData	O	Specifies non-standardized information.

21.1.13.2.2 Negative Acknowledgement

The negative acknowledgement error codes are described in 12.2.14, “ErrorValue”, on page 115.

21.1.13.3 Operational Model

21.1.13.3.1 Connection State Transitions

There are no connection state changes due to this service.

21.1.13.3.2 Device-Type Monitoring Event Sequences

There are no events generated as a result of this service.

21.1.13.3.3 Call-Type Monitoring Event Sequences

There are no events generated as a result of this service.

21.1.14 Set Button Information C → S

The Set Button Information service allows a computing function to set the information for a specified button at a specified device.

21.1.14.1 Service Request

Table 21-29 Set Button Information—Service Request

Parameter Name	Type	M/ O/C	Description
device	DeviceID	M	Specifies the device’s physical element.
button	ButtonID	M	Specifies the button to be set.

© ISO/IEC 2007 – All rights reserved

Copyright International Organization for Standardization
Provided by IHS under license with ISO
No reproduction or networking permitted without license from IHS
Not for Resale

Table 21-29 Set Button Information—Service Request (continued)

Parameter Name	Type	M/ O/C	Description
buttonLabel[a]	Characters (64)	C	Specifies the label by which a button may be referenced. The maximum length supported by the switching function is provided via the capabilities exchange services.
buttonAssociatedNumber	DeviceID	C	Specifies a diallable string (in diallable digit format, such as a speed-dial number) to be associated with the button.
security	CSTASecurityData	O	Specifies timestamp information, message sequence number, and security information.
privateData	CSTAPrivateData	O	Specifies non-standardized information.

a. At least one of the following parameters must be provided: buttonLabel, buttonAssociatedNumber.

21.1.14.2 Service Response

The capability exchange services describe the type of acknowledgement model (atomic or multi-step) that the switching function supports for this service request.

21.1.14.2.1 Positive Acknowledgement

Table 21-30 Set Button Information—Positive Acknowledgement

Parameter Name	Type	M/ O/C	Description
security	CSTASecurityData	O	Specifies timestamp information, message sequence number, and security information.
privateData	CSTAPrivateData	O	Specifies non-standardized information.

21.1.14.2.2 Negative Acknowledgement

The negative acknowledgement error codes are described in 12.2.14, “ErrorValue”, on page 115.

21.1.14.3 Operational Model

21.1.14.3.1 Connection State Transitions

There are no connection state changes due to this service.

21.1.14.3.2 Device-Type Monitoring Event Sequences

Table 21-31 Set Button Information—Device-Type Monitoring Event Sequences

Monitored Device	Event
D1 (device)	Button Information

21.1.14.3.3 Call-Type Monitoring Event Sequences

If the monitor object is a device, if supported, the monitoring event sequence is the same as the Device-Type Monitoring event sequence.

21.1.15 Set Display

C → S

The Set Display service allows the computing function to set a display associated with a device.

© ISO/IEC 2007 – All rights reserved

Copyright International Organization for Standardization
Provided by IHS under license with ISO
No reproduction or networking permitted without license from IHS
Not for Resale

The Get Display service can be used to determine the size of a specific display. The capabilities exchange services can be used to determine the number of displays associated with a device.

21.1.15.1 Service Request

Table 21-32 Set Display—Service Request

Parameter Name	Type	M/ O/C	Description
device	DeviceID	M	Specifies the device's physical element.
displayID	DisplayID	C	Specifies which display on the physical device needs to be set. If the device has only one display this parameter may be omitted, but it may also be filled in (specifying the one and only displayID). If the device has more than one display this parameter shall be present.
physicalBaseRowNumber	Value	O	The row number of the physical base, i.e. the logical row that appears at the first row of the physical display. This parameter may be omitted or may be present when it needs to be changed. The parameter shall be omitted when it is not relevant because the number of physical rows is equal to the number of logical rows.
physicalBaseColumnNumber	Value	O	The column number of the physical base, i.e. the logical column that appears at the first column of the physical display. This parameter may be omitted or may be present when it needs to be changed. This parameter shall be omitted when it is not relevant because the number of physical columns is equal to the number of logical columns.
contentsOfDisplay	Characters (240)	M	Specifies the text to place on the display as a string of characters consisting of the text on each row of the display (including spaces) concatenated together. If a null string is sent, the display will be cleared.
offset	Value	O	This parameter specifies the offset, in number-of-characters (not bytes in the characters-to-be-displayed message string), where text is to start on the display. Allowed values are from zero (default) to (MaxNbrOfLogicalColumns * MaxNbrOfLogicalRows - 1). Non-printable characters (e.g. Carriage Return (CR), Line Feed (LF), and Tab) are counted in determining offsets and the message length.
security	CSTASecurityData	O	Specifies timestamp information, message sequence number, and security information.
privateData	CSTAPrivateData	O	Specifies non-standardized information.

21.1.15.2 Service Response

The capability exchange services describe the type of acknowledgement model (atomic or multi-step) that the switching function supports for this service request.

21.1.15.2.1 Positive Acknowledgement

Table 21-33 Set Display—Positive Acknowledgement

Parameter Name	Type	M/ O/C	Description
security	CSTASecurityData	O	Specifies timestamp information, message sequence number, and security information.

© ISO/IEC 2007 – All rights reserved

Copyright International Organization for Standardization
Provided by IHS under license with ISO
No reproduction or networking permitted without license from IHS
Not for Resale

Table 21-33 Set Display—Positive Acknowledgement (continued)

Parameter Name	Type	M/ O/C	Description
privateData	CSTAPrivateData	O	Specifies non-standardized information.

21.1.15.2.2 Negative Acknowledgement

The negative acknowledgement error codes are described in 12.2.14, “ErrorValue”, on page 115.

21.1.15.3 Operational Model

21.1.15.3.1 Connection State Transitions

There are no connection state changes due to this service.

21.1.15.3.2 Device-Type Monitoring Event Sequences

Table 21-34 Set Display—Device-Type Monitoring Event Sequences

Monitored Device	Event
D1 (device)	Display Updated

21.1.15.3.3 Call-Type Monitoring Event Sequences

If the monitor object is a device, if supported, the monitoring event sequence is the same as the Device-Type Monitoring event sequence.

21.1.15.3.4 Functional Requirements

1. If the characters in the contentsOfDisplay parameter overflow the display space, they will be truncated.
2. This service will only affect the areas of the display which are overlaid with the characters in the contentsOfDisplay parameter. The Set Display service overwrites existing display contents on a character-position by character-position basis. (Character positions which are before or after the character positions of the to-be-displayed characters are not affected.)
3. The contentsOfDisplay parameter will be interpreted as being in the same character set as that provided by the switching function in the Get Display service.
4. Characters in the contentsOfDisplay parameter that do not have associated symbols in the display’s current character set appear as spaces. Characters with special attributes like highlighting shall have their own symbols represented in the display’s current character set.
5. If the contentsOfDisplay parameter consists of a null string, the display will be cleared from the offset position to the end of the display.
6. The display area available to the Set Display service may be larger than the visible display area. For example, the display may use paging or scrolling to bring portions of the display into view. All display services and events reference the entire display size rather than only the simultaneously-visible size. Similarly, any formatting or display manipulation to sequentially present multiple pages of information are the responsibility of the switching function and display.
7. When the physicalBaseRowNumber and/or the physicalBaseColumnNumber parameters are provided in the service request with values that are different from the current values, the switching function can either accept the service and modify the relative positions of the logical and physical displays (i.e., scrolling) or

© ISO/IEC 2007 – All rights reserved

Copyright International Organization for Standardization
Provided by IHS under license with ISO
No reproduction or networking permitted without license from IHS
Not for Resale

it can reject the service if it does not support this capability as indicated by the capability exchange services.

21.1.16 Set Hookswitch Status

C → S

The Set Hookswitch Status service allows the computing function to activate and deactivate (i.e., go offhook/ onhook) an auditory apparatus (e.g. speakerphone, handset, headset) at a specified device.

21.1.16.1 Service Request

Table 21-35 Set Hookswitch Status—Service Request

Parameter Name	Type	M/ O/C	Description
device	DeviceID	M	Specifies the device's physical element.
hookswitch	HookswitchID	M	Specifies the hookswitch whose status is to be set.
hookswitchOnHook	Boolean	M	Specifies the state of the hookswitch. The complete set of possible values is: • TRUE - The switch is onhook. • FALSE - The switch is offhook.
security	CSTASecurityData	O	Specifies timestamp information, message sequence number, and security information.
privateData	CSTAPrivateData	O	Specifies non-standardized information.

21.1.16.2 Service Response

The capability exchange services describe the type of acknowledgement model (atomic or multi-step) that the switching function supports for this service request.

21.1.16.2.1 Positive Acknowledgement

Table 21-36 Set Hookswitch Status—Positive Acknowledgement

Parameter Name	Type	M/ O/C	Description
security	CSTASecurityData	O	Specifies timestamp information, message sequence number, and security information.
privateData	CSTAPrivateData	O	Specifies non-standardized information.

21.1.16.2.2 Negative Acknowledgement

The negative acknowledgement error codes are described in 12.2.14, “ErrorValue”, on page 115.

21.1.16.3 Operational Model

21.1.16.3.1 Connection State Transitions

There are no connection state changes due to this service.

© ISO/IEC 2007 – All rights reserved

Copyright International Organization for Standardization
Provided by IHS under license with ISO
No reproduction or networking permitted without license from IHS
Not for Resale

21.1.16.3.2 Device-Type Monitoring Event Sequences

Table 21-37 Set Hookswitch Status—Device-Type Monitoring Event Sequences

Monitored Device	Event
D1 (device)	Hookswitch

21.1.16.3.3 Call-Type Monitoring Event Sequences

If the monitor object is a device, if supported, the monitoring event sequence is the same as the Device-Type Monitoring event sequence.

21.1.17 Set Lamp Mode

C ⟶ S

The Set Lamp Mode service allows a computing function to control how a specified lamp is lit at a specified device.

21.1.17.1 Service Request

Table 21-38 Set Lamp Mode—Service Request

Parameter Name	Type	M/ O/C	Description
device	DeviceID	M	Specifies the device's physical element.
lamp	LampID	M	Specifies the LampID of the lamp on the device.
lampMode	Value	M	Specifies how the lamp associated with the specified device should be lit. The complete set of possible values is: • 0 - Brokenflutter. Superposition of wink and flutter. • 1 - Flutter. Fast on and off. • 2 - Off. Lamp is off. • 3 - Steady. Lamp is continuously lit. • 4 - Wink. Lamp is winking. • 5 - not used • All other values (6-100) are switching function specific.
lampBrightness	Enumerated	O	Indicates intensity of lamp when the lamp is on (as indicated by lampMode parameter). Actual visible brightness levels are lamp-dependent. The complete set of possible values is: • Unspecified/Normal (default) • Dim • Bright
lampColor	Value	O	Specifies the color of the lamp. The meaning of the following values are pre-assigned: • 0 - no color • 1 - Red • 2 - Yellow • 3 - Green • 4 - Blue • 5 - not used • All other values (6-100) are switching function specific.

© ISO/IEC 2007 – All rights reserved

Copyright International Organization for Standardization
Provided by IHS under license with ISO
No reproduction or networking permitted without license from IHS
Not for Resale

Table 21-38 Set Lamp Mode—Service Request (continued)

Parameter Name	Type	M/ O/C	Description
security	CSTASecurityData	O	Specifies timestamp information, message sequence number, and security information.
privateData	CSTAPrivateData	O	Specifies non-standardized information.

21.1.17.2 Service Response

The capability exchange services describe the type of acknowledgement model (atomic or multi-step) that the switching function supports for this service request.

21.1.17.2.1 Positive Acknowledgement

Table 21-39 Set Lamp Mode—Positive Acknowledgement

Parameter Name	Type	M/ O/C	Description
security	CSTASecurityData	O	Specifies timestamp information, message sequence number, and security information.
privateData	CSTAPrivateData	O	Specifies non-standardized information.

21.1.17.2.2 Negative Acknowledgement

The negative acknowledgement error codes are described in 12.2.14, “ErrorValue”, on page 115.

21.1.17.3 Operational Model

21.1.17.3.1 Connection State Transitions

There are no connection state changes due to this service.

21.1.17.3.2 Device-Type Monitoring Event Sequences

Table 21-40 Set Lamp Mode—Device-Type Monitoring Event Sequences

Monitored Device	Event
D1 (device)	Lamp Mode

21.1.17.3.3 Call-Type Monitoring Event Sequences

If the monitor object is a device, if supported, the monitoring event sequence is the same as the Device-Type Monitoring event sequence.

21.1.18 Set Message Waiting Indicator

C → S

The Set Message Waiting Indicator service allows a computing function to control the status of the message waiting feature at a specified device. The message waiting feature is typically used to notify a user (typically via a dedicated lamp on a phone device) when messages are available.

© ISO/IEC 2007 – All rights reserved

Copyright International Organization for Standardization
Provided by IHS under license with ISO
No reproduction or networking permitted without license from IHS
Not for Resale

21.1.18.1 Service Request

Table 21-41 Set Message Waiting Indicator—Service Request

Parameter Name	Type	M/ O/C	Description
device	DeviceID	M	Specifies the device's physical element.
messageWaitingOn	Boolean	M	Specifies the setting of the message waiting feature. The complete set of possible values is: • OFF - Message waiting off. • ON - Message waiting on.
deviceForMessage	DeviceID	O	Specifies the device where the message is waiting.
security	CSTASecurityData	O	Specifies timestamp information, message sequence number, and security information.
privateData	CSTAPrivateData	O	Specifies non-standardized information.

21.1.18.2 Service Response

The capability exchange services describe the type of acknowledgement model (atomic or multi-step) that the switching function supports for this service request.

21.1.18.2.1 Positive Acknowledgement

Table 21-42 Set Message Waiting Indicator—Positive Acknowledgement

Parameter Name	Type	M/ O/C	Description
security	CSTASecurityData	O	Specifies timestamp information, message sequence number, and security information.
privateData	CSTAPrivateData	O	Specifies non-standardized information.

21.1.18.2.2 Negative Acknowledgement

The negative acknowledgement error codes are described in 12.2.14, “ErrorValue”, on page 115.

21.1.18.3 Operational Model

21.1.18.3.1 Connection State Transitions

There are no connection state changes due to this service.

21.1.18.3.2 Device-Type Monitoring Event Sequences

Table 21-43 Set Message Waiting Indicator—Device-Type Monitoring Event Sequences

Monitored Device	Event
D1 (device)	Message Waiting

21.1.18.3.3 Call-Type Monitoring Event Sequences

If the monitor object is a device, if supported, the monitoring event sequence is the same as the Device-Type Monitoring event sequence.

© ISO/IEC 2007 – All rights reserved

Copyright International Organization for Standardization
Provided by IHS under license with ISO
No reproduction or networking permitted without license from IHS
Not for Resale

21.1.19 Set Microphone Gain

C ⟶ S

The Set Microphone Gain service allows the computing function to control the microphone gain setting (input level) of the microphone associated with one auditory apparatus at a specified device.

21.1.19.1 Service Request

Table 21-44 Set Microphone Gain—Service Request

Parameter Name	Type	M/ O/C	Description
device	DeviceID	M	Specifies the device's physical element.
auditoryApparatus	AuditoryApparatusID	M	Specifies the auditory apparatus at the designated device on which to set the feature.

microphoneGain	Choice Structure	M	Specifies the gain as an absolute gain value or that the gain should be incremented or decremented by a switch specified increment. It may be one of the following possible choices:
			• micGainAbs (Value) - Specifies a value from 0 through 100. 0 indicates silence, and 100 indicates maximum gain. The granularity and quantization of the values 1 though 99 are device specific
			• micGainInc (Enumerated) - Specifies if the gain is to be incremented or decremented by a switch specified amount. The complete set of possible values is:
			  • increment - the gain value is incremented
			  • decrement - the gain value is decremented.

security	CSTASecurityData	O	Specifies timestamp information, message sequence number, and security information.
privateData	CSTAPrivateData	O	Specifies non-standardized information.

21.1.19.2 Service Response

The capability exchange services describe the type of acknowledgement model (atomic or multi-step) that the switching function supports for this service request.

21.1.19.2.1 Positive Acknowledgement

Table 21-45 Set Microphone Gain—Positive Acknowledgement

Parameter Name	Type	M/ O/C	Description
security	CSTASecurityData	O	Specifies timestamp information, message sequence number, and security information.
privateData	CSTAPrivateData	O	Specifies non-standardized information.

21.1.19.2.2 Negative Acknowledgement

The negative acknowledgement error codes are described in 12.2.14, “ErrorValue”, on page 115.

21.1.19.3 Operational Model

21.1.19.3.1 Connection State Transitions

There are no connection state changes due to this service.

© ISO/IEC 2007 – All rights reserved

Copyright International Organization for Standardization
Provided by IHS under license with ISO
No reproduction or networking permitted without license from IHS
Not for Resale

21.1.19.3.2 Device-Type Monitoring Event Sequences

Table 21-46 Set Microphone Gain—Device-Type Monitoring Event Sequences

Monitored Device	Event
D1 (device)	Microphone Gain

21.1.19.3.3 Call-Type Monitoring Event Sequences

If the monitor object is a device, if supported, the monitoring event sequence is the same as the Device-Type Monitoring event sequence.

21.1.20 Set Microphone Mute

C ⟶ S

The Set Microphone Mute service allows the computing function to control the microphone mute status of the microphone associated with one auditory apparatus at a specified device.

While a device's microphone is muted, no audio information is transmitted over the microphone. This is used when it is desired to prevent the other device(s) in a call from hearing a conversation.

21.1.20.1 Service Request

Table 21-47 Set Microphone Mute—Service Request

Parameter Name	Type	M/ O/C	Description
device	DeviceID	M	Specifies the device's physical element.
auditoryApparatus	AuditoryApparatusID	M	Specifies the auditory apparatus at the designated device on which to set the feature.
microphoneMuteOn	Boolean	M	Specifies the microphone mute setting of a particular microphone. The complete set of possible values is: • OFF - Microphone is activated. • ON - Microphone is muted.
security	CSTASecurityData	O	Specifies timestamp information, message sequence number, and security information.
privateData	CSTAPrivateData	O	Specifies non-standardized information.

21.1.20.2 Service Response

The capability exchange services describe the type of acknowledgement model (atomic or multi-step) that the switching function supports for this service request.

21.1.20.2.1 Positive Acknowledgement

Table 21-48 Set Microphone Mute—Positive Acknowledgement

Parameter Name	Type	M/ O/C	Description
security	CSTASecurityData	O	Specifies timestamp information, message sequence number, and security information.
privateData	CSTAPrivateData	O	Specifies non-standardized information.

21.1.20.2.2 Negative Acknowledgement

The negative acknowledgement error codes are described in 12.2.14, "ErrorValue", on page 115.

© ISO/IEC 2007 – All rights reserved

Copyright International Organization for Standardization
Provided by IHS under license with ISO
No reproduction or networking permitted without license from IHS
Not for Resale

21.1.20.3 Operational Model

21.1.20.3.1 Connection State Transitions

There are no connection state changes due to this service.

21.1.20.3.2 Device-Type Monitoring Event Sequences

Table 21-49 Set Microphone Mute—Device-Type Monitoring Event Sequences

Monitored Device	Event
D1 (device)	Microphone Mute

21.1.20.3.3 Call-Type Monitoring Event Sequences

If the monitor object is a device, if supported, the monitoring event sequence is the same as the Device-Type Monitoring event sequence.

21.1.21 Set Ringer Status

C → S

The Set Ringer Status service allows the computing function to control ringing of a specified ringer on a device. It also allows a computing function to control the ring pattern and ring volume settings only during the ringing cycle that is being initiated with this service (i.e. does not permanently change the configuration or programming of the ringer attributes).

21.1.21.1 Service Request

Table 21-50 Set Ringer Status—Service Request

Parameter Name	Type	M/ O/C	Description
device	DeviceID	M	Specifies the device's physical element.
ringer	RingerID	M	Specifies the ringer to be set.
ringMode[a]	Enumerated	C	Indicates if the ringer should be rung or not rung. The complete set of possible values is: • ringing - The ringer should be rung. • not ringing - The ringer should not be rung.
ringPattern[a]	Value	C	Indicates the value of the ringing pattern of the ringer. The meaning of the ringing patterns and the number of supported patters is device specific. This parameter is only valid when ringMode has a value of ringing and has no effect on the ringPattern used during subsequent call related ringing. If ringMode has a value of Ringing then ringPattern is Mandatory.

© ISO/IEC 2007 – All rights reserved

Copyright International Organization for Standardization
Provided by IHS under license with ISO
No reproduction or networking permitted without license from IHS
Not for Resale

Table 21-50 Set Ringer Status—Service Request (continued)

Parameter Name	Type	M/ O/C	Description

ringVolume[a]	Choice Structure	C	Indicates the volume level of the ringer. May specify either an absolute value or may specify that the volume should be incremented or decremented by a switch specified increment. It may be one of the following possible choices:
			• ringVolAbs (Value) - Specifies a value from 0 through 100. 0 indicates silence, and 100 indicates maximum volume. The granularity and quantization of the values 1 though 99 are device specific
			• ringVolInc (Enumerated) - Specifies if the volume is to be incremented or decremented by a switch specified amount. The complete set of possible values is:
			  • increment - the volume is incremented
			  • decrement - the volume is decremented.
			Note that the relationship between the ringer volume and loudness is ringer specific.

security	CSTASecurityData	O	Specifies timestamp information, message sequence number, and security information.
privateData	CSTAPrivateData	O	Specifies non-standardized information.

a. At least one of the following parameters in the service request described above shall be provided in the service request: ringMode, ringPattern, ringVolume.

21.1.21.2 Service Response

The capability exchange services describe the type of acknowledgement model (atomic or multi-step) that the switching function supports for this service request.

21.1.21.2.1 Positive Acknowledgement

Table 21-51 Set Ringer Status—Positive Acknowledgement

Parameter Name	Type	M/ O/C	Description
security	CSTASecurityData	O	Specifies timestamp information, message sequence number, and security information.
privateData	CSTAPrivateData	O	Specifies non-standardized information.

21.1.21.2.2 Negative Acknowledgement

The negative acknowledgement error codes are described in 12.2.14, “ErrorValue”, on page 115.

21.1.21.3 Operational Model

21.1.21.3.1 Connection State Model Transitions

There are no connection state changes due to this service.

© ISO/IEC 2007 – All rights reserved

Copyright International Organization for Standardization
Provided by IHS under license with ISO
No reproduction or networking permitted without license from IHS
Not for Resale

21.1.21.3.2 Device-Type Monitoring Event Sequences

Table 21-52 Set Ringer Status—Device-Type Monitoring Event Sequences

Monitored Device	Event
D1 (device)	Ringer Status

21.1.21.3.3 Call-Type Monitoring Event Sequences

If the monitor object is a device, if supported, the monitoring event sequence is the same as the Device-Type Monitoring event sequence.

21.1.21.3.4 Functional Requirements

1. Note that some switching functions do not allow the computing function to directly control ringing of a device. (Switching functions will ring a device to indicate that a call has arrived at a device, for example.)

21.1.22 Set Speaker Mute

C ⟶ S

The Set Speaker Mute service allows a computing function to control the speaker mute status of the hookswitch components at a specified device.

While a device's speaker is muted, no audio information is transmitted over the speaker.

21.1.22.1 Service Request

Table 21-53 Set Speaker Mute—Service Request

Parameter Name	Type	M/ O/C	Description
device	DeviceID	M	Specifies the device's physical element.
auditoryApparatus	AuditoryApparatusID	M	Specifies the auditory apparatus at the designated device on which to set the feature.
speakerMuteOn	Boolean	M	Specifies the speaker mute setting of a particular speaker at a device. The complete set of possible values is: • FALSE - Mute is off (i.e., speaker is activated). • TRUE - Mute is on (i.e., speaker is muted).
security	CSTASecurityData	O	Specifies timestamp information, message sequence number, and security information.
privateData	CSTAPrivateData	O	Specifies non-standardized information.

21.1.22.2 Service Response

The capability exchange services describe the type of acknowledgement model (atomic or multi-step) that the switching function supports for this service request.

21.1.22.2.1 Positive Acknowledgement

Table 21-54 Set Speaker Mute—Positive Acknowledgement

Parameter Name	Type	M/ O/C	Description
security	CSTASecurityData	O	Specifies timestamp information, message sequence number, and security information.

© ISO/IEC 2007 – All rights reserved

Copyright International Organization for Standardization
Provided by IHS under license with ISO
No reproduction or networking permitted without license from IHS
Not for Resale

Table 21-54 Set Speaker Mute—Positive Acknowledgement (continued)

Parameter Name	Type	M/ O/C	Description
privateData	CSTAPrivateData	O	Specifies non-standardized information.

21.1.22.2.2 Negative Acknowledgement

The negative acknowledgement error codes are described in 12.2.14, “ErrorValue”, on page 115.

21.1.22.3 Operational Model

21.1.22.3.1 Connection State Transitions

There are no connection state changes due to this service.

21.1.22.3.2 Device-Type Monitoring Event Sequences

Table 21-55 Set Speaker Mute—Device-Type Monitoring Event Sequences

Monitored Device	Event
D1 (device)	Speaker Mute

21.1.22.3.3 Call-Type Monitoring Event Sequences

If the monitor object is a device, if supported, the monitoring event sequence is the same as the Device-Type Monitoring event sequence.

21.1.23 Set Speaker Volume

C → S

The Set Speaker Volume service allows the computing function to control the speaker volume of the speaker associated with one auditory apparatus at a specified device.

21.1.23.1 Service Request

Table 21-56 Set Speaker Volume—Service Request

Parameter Name	Type	M/ O/C	Description
device	DeviceID	M	Specifies the device’s physical element.
auditoryApparatus	AuditoryApparatusID	M	Specifies the auditory apparatus containing the speaker whose volume is to be set.

speakerVolume	Choice Structure	M	Specifies the speaker volume as an absolute value or that the volume should be incremented or decremented by a switch specified increment. It may be one of the following possible choices:
			• speakerVolAbs (Value) - Specifies a value from 0 through 100. 0 indicates silence, and 100 indicates maximum volume. The granularity and quantization of the values 1 though 99 are device specific
			• speakerVolInc (Enumerated) - Specifies if the volume is to be incremented or decremented by a switch specified amount. The complete set of possible values is:
			  • increment - the volume is incremented
			  • decrement - the volume is decremented.

© ISO/IEC 2007 – All rights reserved

Copyright International Organization for Standardization
Provided by IHS under license with ISO
No reproduction or networking permitted without license from IHS
Not for Resale

Table 21-56 Set Speaker Volume—Service Request (continued)

Parameter Name	Type	M/ O/C	Description
security	CSTASecurityData	O	Specifies timestamp information, message sequence number, and security information.
privateData	CSTAPrivateData	O	Specifies non-standardized information.

21.1.23.2 Service Response

The capability exchange services describe the type of acknowledgement model (atomic or multi-step) that the switching function supports for this service request.

21.1.23.2.1 Positive Acknowledgement

Table 21-57 Set Speaker Volume—Positive Acknowledgement

Parameter Name	Type	M/ O/C	Description
security	CSTASecurityData	O	Specifies timestamp information, message sequence number, and security information.
privateData	CSTAPrivateData	O	Specifies non-standardized information.

21.1.23.2.2 Negative Acknowledgement

The negative acknowledgement error codes are described in 12.2.14, “ErrorValue”, on page 115.

21.1.23.3 Operational Model

21.1.23.3.1 Connection State Transitions

There are no connection state changes due to this service.

21.1.23.3.2 Device-Type Monitoring Event Sequences

Table 21-58 Set Speaker Volume—Device-Type Monitoring Event Sequences

Monitored Device	Event
D1 (device)	Speaker Volume

21.1.23.3.3 Call-Type Monitoring Event Sequences

If the monitor object is a device, if supported, the monitoring event sequence is the same as the Device-Type Monitoring event sequence.

21.1.23.3.4 Functional Requirements

1. Some switching functions may reset the speaker volume after each call.
2. Some switching functions reject the setting of the speaker volume if there is not an active call at a device.

© ISO/IEC 2007 – All rights reserved

Copyright International Organization for Standardization
Provided by IHS under license with ISO
No reproduction or networking permitted without license from IHS
Not for Resale

21.2 Events

Table 21-59 Physical Device Feature Event Summary

Physical Device Feature Event	Description	Pg.
21.2.1 Button Information	The information associated with a button on a device has changed.	451
21.2.2 Button Press	A button has been pressed.	452
21.2.3 Display Updated	The contents of a device's display has changed.	452
21.2.4 Hookswitch	A hookswitch status has changed.	454
21.2.5 Lamp Mode	The lamp mode status of a particular lamp has changed.	454
21.2.6 Message Waiting	The message waiting status has changed.	455
21.2.7 Microphone Gain	The microphone gain setting has changed for one of the hookswitches.	456
21.2.8 Microphone Mute	The microphone mute status has changed for one of the hookswitches.	457
21.2.9 Ringer Status	The ringer attribute associated with a device has changed.	457
21.2.10 Speaker Mute	The speaker mute status has changed for one of the hookswitches.	458
21.2.11 Speaker Volume	The speaker volume setting has changed for one of the hookswitches.	459

21.2.1 Button Information

The Button Information event indicates that information associated with a button has changed.

This event may be generated in any one of the following ways:

- The button information has changed manually through the telephone keypad or through a management feature.
- A computing function, on behalf of a user, has invoked the Set Button Information service.

21.2.1.1 Event Parameters

Table 21-60 Button Information—Event Parameters

Parameter Name	Type	M/ O/C	Description
monitorCrossRefID	MonitorCrossRefID	M	Associates the event to an established monitor.
device	SubjectDeviceID	M	Specifies the device where the button information feature was changed.
button	ButtonID	M	Specifies the button on the device.
buttonLabel[a]	Characters (64)	C	Specifies the label by which the button may be referenced.
buttonAssociatedNumber	DeviceID	C	Specifies a number (in diallable string format) associated with the button.
buttonPressIndicator	Boolean	C	Specifies if the button can be pressed via the Button Press service. The complete set of possible values is: • TRUE - the button can be pressed. • FALSE - the button can not be pressed.
security	CSTASecurityData	O	Specifies timestamp information, message sequence number, and security information.
privateData	CSTAPrivateData	O	Specifies non-standardized information.

a. At least one of the following parameters shall be provided: buttonLabel, buttonAssociatedNumber, buttonPressIndicator.

© ISO/IEC 2007 – All rights reserved

Copyright International Organization for Standardization
Provided by IHS under license with ISO
No reproduction or networking permitted without license from IHS
Not for Resale

21.2.2 Button Press

The Button Press event indicates that a button has been pressed.

This event may be generated in any one of the following ways:

- The button has been pressed manually.
- A computing function, on behalf of a user, has invoked the Button Press service.

21.2.2.1 Event Parameters

Table 21-61 Button Press—Event Parameters

Parameter Name	Type	M/ O/C	Description
monitorCrossRefID	MonitorCrossRefID	M	Associates the event to an established monitor.
device	SubjectDeviceID	M	Specifies the device where the button press feature was changed.
button	ButtonID	M	Specifies the button that was pressed.
buttonLabel[a]	Characters (64)	C	Specifies the label by which the button may be referenced.
buttonAssociatedNumber	DeviceID	C	Indicates a number (in diallable string format) associated with the button.
security	CSTASecurityData	O	Specifies timestamp information, message sequence number, and security information.
privateData	CSTAPrivateData	O	Specifies non-standardized information.

a. At least on of the following parameters must be provided: buttonLabel, buttonAssociatedNumber.

21.2.2.2 Functional Requirements

1. The Button Press event is only provided when the button is physically pressed or when the Button Press service is used. It is not to be used to track the function that the button represents.

21.2.3 Display Updated

The Display Updated event indicates that the contents of one of the displays associated with a device has changed.

The capabilities exchange services can be used to determine the number of displays associated with a device.

21.2.3.1 Event Parameters

Table 21-62 Display Updated—Event Parameters

Parameter Name	Type	M/ O/C	Description
monitorCrossRefID	MonitorCrossRefID	M	Associates the event to an established monitor.
device	SubjectDeviceID	M	Specifies the device where the display information was changed.

© ISO/IEC 2007 – All rights reserved

Copyright International Organization for Standardization
Provided by IHS under license with ISO
No reproduction or networking permitted without license from IHS
Not for Resale

Table 21-62 Display Updated—Event Parameters (continued)

Parameter Name	Type	M/ O/C	Description
displayID	DisplayID	O	Specifies the display to which the other provided information applies. When there is exactly one display this parameter may be omitted, but it may then also be present containing the one and only displayID. When there is more than one display this parameter shall be present.
logicalRows	Value	M	The number of rows on the logical display.
logicalColumns	Value	M	The number of columns on the logical display.
physicalRows	Value	C	The number of rows on the physical display. When the number of physical Rows is equal to the number of logical Rows this parameter shall be omitted, otherwise it shall be present.
physicalColumns	Value	C	The number of columns on the physical display. When the number of physicalColumns is equal to the number of logicalColumns this parameter shall be omitted, otherwise it shall be present.
physicalBaseRowNumber	Value	C	The row number of the physical base, i.e. the logical row that appears at the first row of the physical display. When the number of physicalRows is equal to the number of logicalRows this parameter shall be omitted, otherwise it shall be present.
physicalBaseColumnNumber	Value	C	The column number of the physical base, i.e. the logical column that appears at the first column of the physical display. When the number of physicalColumns is equal to the number of logicalColumns this parameter shall be omitted, otherwise it shall be present.
characterSet	Enumerated	O	Specifies the character set which is being used to represent the text on the display. The complete set of possible values is: • ASCII (default) • Unicode • Proprietary
contentsOfDisplay	Characters (240)	M	Specifies the text on display as a string of characters consisting of the text on each row of the display (including spaces) concatenated together.
security	CSTASecurityData	O	Specifies timestamp information, message sequence number, and security information.
privateData	CSTAPrivateData	O	Specifies non-standardized information.

21.2.3.2 Functional Requirements

1. The contentsOfDisplay parameter always contains the maximum number of characters on the display as indicated by the number of logicalRows and logicalColumns.
2. The character set for a specific display associated with a given device is fixed so the value returned in characterSet shall always be the same for a given device. The same applies to logicalRows, logicalColumns, physicalRows, and physicalColumns.
3. Only display contents in areas that are controlled or readable by the switching function are modeled as part of the physical device's display. Areas that are under local-station or user control only may or may not, depending upon the switching function, be considered part of the physical device's display.

© ISO/IEC 2007 – All rights reserved

Copyright International Organization for Standardization
Provided by IHS under license with ISO
No reproduction or networking permitted without license from IHS
Not for Resale

4. When the switching function supports the Display Updated event for a given device, then anytime one of the displays associated with that device is updated by the switching function, the Display Updated event is generated. In a Display Updated event, the entire contents of the specified display is provided. The computing function may compare the received display snapshots to track specific changes in the display.
5. This event is generated when a display update has been completed by the switching function. The determination of when completion occurs (or even whether the display has changed at all) is switching-function specific if the display change has not been changed via the Set Display service. For example, depending upon the switching function, it could occur on a character-by-character basis (though this is not recommended or when the entire new display contents have been sent (recommended). Similarly, it is switching-function dependent whether locally-controlled (i.e., by the station device itself) or frequently-changed information (such as clock times) are modeled as part of the physical device's display and if so, at what interval the Display Updated event is generated.
6. If the Set Display service is used to update the display, then the update is considered complete (for purposes of generating this event) when the Set Display's completion criteria are fulfilled.

21.2.4 Hookswitch

The Hookswitch event indicates that the hookswitch status (on-hook/off-hook) has changed.

This event may be generated in any one of the following ways:

- The computing function has invoked the Set Hookswitch Status service.
- The hookswitch status has been changed manually.
- The computing function has invoked a call control service that indirectly affected the hookswitch.

21.2.4.1 Event Parameters

Table 21-63 Hookswitch—Event Parameters

Parameter Name	Type	M/ O/C	Description
monitorCrossRefID	MonitorCrossRefID	M	Associates the event to an established monitor.
device	SubjectDeviceID	M	Specifies the device where the feature was changed.
hookswitch	HookswitchID	M	Specifies the hookswitch at the device where the feature was invoked.
hookswitchOnHook	Boolean	M	Specifies the state of the hookswitch. The complete set of possible values is: • On-hook - The switch is open and the hookswitch is inactive. • Off-hook - The switch is closed and the hookswitch is active.
security	CSTASecurityData	O	Specifies timestamp information, message sequence number, and security information.
privateData	CSTAPrivateData	O	Specifies non-standardized information.

21.2.5 Lamp Mode

The Lamp Mode event indicates that the lamp mode status has changed for a device.

This event may be generated in any one of the following ways:

- A feature associated with the lamp has changed status because of a manual button depression.

--`,,```,,,,````-`-`,,`,,`,`,,`---
© ISO/IEC 2007 – All rights reserved
Copyright International Organization for Standardization
Provided by IHS under license with ISO
No reproduction or networking permitted without license from IHS
Not for Resale

- A computing function, on behalf of a user, has invoked the Set Lamp Mode service.

21.2.5.1 Event Parameters

Table 21-64 Lamp Mode—Event Parameters

Parameter Name	Type	M/ O/C	Description
monitorCrossRefID	MonitorCrossRefID	M	Associates the event to an established monitor.
device	SubjectDeviceID	M	Specifies the device where the lamp mode status was changed.
lamp	LampID	M	Specifies the lamp identifier of the lamp on the device.
lampLabel[a]	Characters (64)	C	Specifies the label by which the lamp may be referenced.
lampMode	Value	M	Specifies how the lamp is lit. The complete set of possible values is: • 0 - Brokenflutter. Superposition of wink and flutter. • 1 - Flutter. Fast on and off. • 2 - Off. Lamp is off. • 3 - Steady. Lamp is continuously lit. • 4 - Wink. Lamp is winking. • 5 - Unknown (the switching function cannot determine the mode of the lamp) • All other values (6-100) are switching function specific.
lampBrightness	Enumerated	O	Indicates the intensity of the lamp if it is on (as indicated by lampMode parameter). Actual visible brightness levels are lamp-dependent. The complete set of possible values is: • Unspecified/Normal (default) • Dim • Bright

lampColor	Value	O	• Indicates the color of the lamp. The meaning of the following values are pre-assigned:
			  • 0 - no color
			  • 1 - Red
			  • 2 - Yellow
			  • 3 - Green
			  • 4 - Blue
			  • 5 - Unknown (the switching function cannot determine the color of the lamp) (default if this parameter is not present).
			  • All other values (6-100) are switching function specific.

security	CSTASecurityData	O	Specifies timestamp information, message sequence number, and security information.
privateData	CSTAPrivateData	O	Specifies non-standardized information.

a. At least one of the following parameters shall be provided: lampLabel, lampBrightness, lampColor.

21.2.6 Message Waiting

The Message Waiting event indicates that the message waiting status has been changed for a device.

This event may be generated in any one of the following ways:

© ISO/IEC 2007 – All rights reserved

Copyright International Organization for Standardization
Provided by IHS under license with ISO
No reproduction or networking permitted without license from IHS
Not for Resale

- The message waiting feature has been changed on the telephone.
- A computing function, on behalf of a user, has invoked the Set Message Waiting service.

21.2.6.1 Event Parameters

Table 21-65 Message Waiting—Event Parameters

Parameter Name	Type	M/ O/C	Description
monitorCrossRefID	MonitorCrossRefID	M	Associates the event to an established monitor.
targetDevice	SubjectDeviceID	M	Specifies the device where the message waiting feature has changed.
deviceForMessage	DeviceID	O	Specifies the device where the message is waiting.
messageWaitingOn	Boolean	M	Specifies the setting of the message waiting feature. The complete set of possible values is: • FALSE - Message waiting off. • TRUE - Message waiting on.
security	CSTASecurityData	O	Specifies timestamp information, message sequence number, and security information.
privateData	CSTAPrivateData	O	Specifies non-standardized information.

21.2.7 Microphone Gain

The Microphone Gain event indicates that the microphone gain setting associated with an auditory apparatus at a specified device has been changed.

This event may be generated in any one of the following ways:

- The microphone gain setting has been adjusted on the telephone.
- A computing function, on behalf of a user, has invoked the Set Microphone Gain service.

21.2.7.1 Event Parameters

Table 21-66 Microphone Gain—Event Parameters

Parameter Name	Type	M/ O/C	Description
monitorCrossRefID	MonitorCrossRefID	M	Associates the event to an established monitor.
invokingDevice	SubjectDeviceID	M	Specifies the device where the feature was invoked.
auditoryApparatus	AuditoryApparatusID	M	Specifies the auditory apparatus containing the microphone whose gain has changed.

microphoneGain	Choice Structure	M	Specifies the gain as an absolute gain value or that the gain has been incremented or decremented by a switch specified increment. It may be one of the following possible choices:
			• micGainAbs (Value) - Specifies a value from 0 through 100. 0 indicates silence, and 100 indicates maximum gain. The granularity and quantization of the values 1 though 99 are device specific.
			• micGainInc (Enumerated) - Specifies if the gain was incremented or decremented by a switch specified amount. The complete set of possible values is:
			  • increment - the gain value was incremented
			  • decrement - the gain value was decremented.

© ISO/IEC 2007 – All rights reserved
Copyright International Organization for Standardization
Provided by IHS under license with ISO
No reproduction or networking permitted without license from IHS
Not for Resale

Table 21-66 Microphone Gain—Event Parameters (continued)

Parameter Name	Type	M/ O/C	Description
security	CSTASecurityData	O	Specifies timestamp information, message sequence number, and security information.
privateData	CSTAPrivateData	O	Specifies non-standardized information.

21.2.8 Microphone Mute

The Microphone Mute event indicates that the microphone mute status for a microphone associated with an auditory apparatus at a specified device has changed.

This event may be generated in any one of the following ways:

- The microphone mute feature has been invoked manually on the telephone.
- A computing function, on behalf of a user, has invoked the Set Microphone Mute service.

21.2.8.1 Event Parameters

Table 21-67 Microphone Mute—Event Parameters

Parameter Name	Type	M/ O/C	Description
monitorCrossRefID	MonitorCrossRefID	M	Associates the event to an established monitor.
invokingDevice	SubjectDeviceID	M	Specifies the device where the feature was invoked.
auditoryApparatus	AuditoryApparatusID	M	Specifies the auditory apparatus where the mute status was changed.
microphoneMuteOn	Boolean	M	Specifies whether the microphone is muted or not. The complete set of possible values is: • FALSE - Microphone is activated. • TRUE - Microphone is muted.
security	CSTASecurityData	O	Specifies timestamp information, message sequence number, and security information.
privateData	CSTAPrivateData	O	Specifies non-standardized information.

21.2.9 Ringer Status

This event indicates that a ringer status associated with a device has changed.

This event may be generated in any one of the following ways:

- The ringer status has been changed via the Set Ringer Status service.
- The switching function has changed the ringer status.

Note that this event only indicates the status of a ringer. Call control events such as the Delivered event should be used to determine call activity at a device.

© ISO/IEC 2007 – All rights reserved

Copyright International Organization for Standardization
Provided by IHS under license with ISO
No reproduction or networking permitted without license from IHS
Not for Resale

21.2.9.1 Event Parameters

Table 21-68 Ringer Status—Event Parameters

Parameter Name	Type	M/ O/C	Description
monitorCrossRefID	MonitorCrossRefID	M	Associates the event to an established monitor.
device	SubjectDeviceID	M	Specifies the device where the ring status was changed.
ringer	RingerID	M	Specifies the ringer associated with the device.
ringMode [a]	Enumerated	C	Indicates if the ringer is in an active ring cycle. The complete set of possible values is: • ringing - The ringer is ringing (provided when either the ringer is physically ringing or is in the “quiet phase” of a ring cycle). • not ringing - The ringer is not in an active ring cycle.
ringCount [a]	Value (0...1000)	C	Indicates the number of complete ring cycles that the ringer has been ringing. The values 0-999 indicate the actual number of complete ring cycles. The value value of 1000 indicates that a value greater than 999 was reached.
ringDuration [a]	Value	C	Indicates the time (in seconds) that the ringer has been ringing. ringDuration should not be provided if ringCount is provided.
ringPattern [a]	Value	C	Indicates the ringing pattern of the ringer. The meaning of the ringing pattern and the number of ringing patterns is device specific.

ringVolume [a]	Choice Structure	C	Indicates the ring volume as an absolute value or that the volume was incremented or decremented by a switch specified increment. The ring volume is associated with the ringer until reset by the switching function or until reset by the Set Ringer Status service.
			It may be one of the following possible choices:
			• ringVolAbs (Value) - Specifies a value from 0 through 100. 0 indicates silence, and 100 indicates maximum volume. The granularity and quantization of the values 1 though 99 are device specific.
			• ringVolInc (Enumerated) - Specifies if the volume was incremented or decremented by a switch specified amount. The complete set of possible values is:
			  • increment - the volume was incremented
			  • decrement - the volume was decremented.
			Note that the relationship between the ringer volume and loudness is ringer specific.

security	CSTASecurityData	O	Specifies timestamp information, message sequence number, and security information.
privateData	CSTAPrivateData	O	Specifies non-standardized information.

a. At least one of the following parameters shall be provided: ringMode, ringCount, ringPattern, ringVolume, ringDuration.

21.2.10 Speaker Mute

The Speaker Mute event indicates that the speaker mute status of a speaker associated with an auditory apparatus in a specified device has changed.

This event may be generated in any one of the following ways:

© ISO/IEC 2007 – All rights reserved

Copyright International Organization for Standardization
Provided by IHS under license with ISO
No reproduction or networking permitted without license from IHS
Not for Resale

- The Speaker Mute feature has been invoked manually on the telephone.
- The computing function has invoked the Set Speaker Mute service.

21.2.10.1 Event Parameters

Table 21-69 Speaker Mute—Event Parameters

Parameter Name	Type	M/ O/C	Description
monitorCrossRefID	MonitorCrossRefID	M	Associates the event to an established monitor.
invokingDevice	SubjectDeviceID	M	Specifies the device where the feature was invoked.
auditoryApparatus	AuditoryApparatusID	M	Specifies the auditory apparatus containing the speaker whose mute status has changed.
speakerMuteOn	Boolean	M	Specifies whether the speaker mute setting is on or not. The complete set of possible values is: • FALSE - Mute is off (i.e., speaker is activated). • TRUE - Mute is on (i.e., speaker is muted).
security	CSTASecurityData	O	Specifies timestamp information, message sequence number, and security information.
privateData	CSTAPrivateData	O	Specifies non-standardized information.

21.2.11 Speaker Volume

The Speaker Volume event indicates that the speaker volume setting of a speaker associated with an auditory apparatus at a specified device has changed.

This event may be generated in any one of the following ways:

- The speaker volume feature has been invoked manually on the telephone.
- The computing function has invoked the Set Speaker Volume service.

21.2.11.1 Event Parameters

Table 21-70 Speaker Volume—Event Parameters

Parameter Name	Type	M/ O/C	Description
monitorCrossRefID	MonitorCrossRefID	M	Associates the event to an established monitor.
invokingDevice	SubjectDeviceID	M	Specifies the device where the feature was invoked.
auditoryApparatus	AuditoryApparatusID	M	Specifies the auditory device containing the speaker whose volume has changed.

© ISO/IEC 2007 – All rights reserved

Copyright International Organization for Standardization
Provided by IHS under license with ISO
No reproduction or networking permitted without license from IHS
Not for Resale

Table 21-70 Speaker Volume—Event Parameters (continued)

Parameter Name	Type	M/ O/C	Description

speakerVolume	Choice Structure	M	Specifies the speaker volume as an absolute value or that the volume was incremented or decremented by a switch specified increment. It may be one of the following possible choices:
			• speakerVolAbs (Value) - Specifies a value from 0 through 100. 0 indicates silence, and 100 indicates maximum volume. The granularity and quantization of the values 1 though 99 are device specific.
			• speakerVolInc (Enumerated) - Specifies if the volume was incremented or decremented by a switch specified amount. The complete set of possible values is:
			  • increment - the volume was incremented
			  • decrement - the volume was decremented.

security	CSTASecurityData	O	Specifies timestamp information, message sequence number, and security information.
privateData	CSTAPrivateData	O	Specifies non-standardized information.

22 Logical Device Features

This clause describes the feature capabilities as related to a logical device. It including the specification of:

- Logical Device Feature services
- Logical Device Feature events

22.1 Services

Table 22-1 Logical Device Feature Services Summary

Logical Device Feature Service	Description	Pg.
22.1.1 Call Back Non-Call-Related	Requests that the switching function originate a call back call between two devices.	461
22.1.2 Call Back Message Non-Call-Related	Requests that the switching function leave a pre-defined message requesting that the target device call the originating device.	462
22.1.3 Cancel Call Back	Cancels a previous (or all) Call Back feature at a device.	463
22.1.4 Cancel Call Back Message	Cancels a previous (or all) Call Back Message feature at a device.	465
22.1.5 Get Agent State	Get the agent state of a specified device.	466
22.1.6 Get Auto Answer	Get the auto-answer status of a specified device	468
22.1.7 Get Auto Work Mode	Get the auto-work mode status of a specified device.	469
22.1.8 Get CallBack	Get the list of callbacks at a specified device.	470
22.1.9 Get Caller ID Status	Get the Caller ID status of a specified device.	472
22.1.10 Get Do Not Disturb	Get the do not disturb status of a specified device.	473
22.1.11 Get Forwarding	Get the forwarding status of a specified device.	474
22.1.12 Get Last Number Dialled	Get the last number dialled at a specified device.	478
22.1.13 Get Routeing Mode	Get the routeing mode at a specified device.	479
22.1.14 Set Agent State	Set the agent state of a specified device.	480
22.1.15 Set Auto Answer	Set the auto-answer status of a specified device.	484

© ISO/IEC 2007 – All rights reserved

Copyright International Organization for Standardization
Provided by IHS under license with ISO
No reproduction or networking permitted without license from IHS
Not for Resale

Table 22-1 Logical Device Feature Services Summary (continued)

Logical Device Feature Service	Description	Pg.
22.1.16 Set Auto Work Mode	Set the auto-work mode status of a specified device.	486
22.1.17 Set Caller ID Status	Set the Caller ID Status at the specified device.	487
22.1.18 Set Do Not Disturb	Set the do not disturb status of a specified device.	489
22.1.19 Set Forwarding	Set the forwarding status of a specified device.	492
22.1.20 Set Routeing Mode	Set the routeing mode of a specified device.	492

22.1.1 Call Back Non-Call-Related

C ⟶ S

The Call Back Non-Call-Related service allows a computing function to request that the switching function originate a call back call between two devices.

As an example, the service might be used when a device is busy so that a call between an originating device and a target device can be attempted when a device becomes free.

22.1.1.1 Service Request

Table 22-2 Call Back Non-Call-Related—Service Request

Parameter Name	Type	M/ O/C	Description
originatingDevice	deviceID	M	Specifies the originating device for the call back call.
targetDevice	deviceID	M	Specifies the target device for the call back call.
security	CSTASecurityData	O	Specifies timestamp information, message sequence number, and security information.
privateData	CSTAPrivateData	O	Specifies non-standardized information.

22.1.1.2 Service Response

The capability exchange services describe the type of acknowledgement model (atomic or multi-step) that the switching function supports for this service request.

22.1.1.2.1 Positive Acknowledgement

Table 22-3 Call Back Non-Call-Related—Positive Acknowledgement

Parameter Name	Type	M/O/ C	Description
security	CSTASecurityData	O	Specifies timestamp information, message sequence number, and security information.
privateData	CSTAPrivateData	O	Specifies non-standardized information.

22.1.1.2.2 Negative Acknowledgement

The negative acknowledgement error codes are described in 12.2.14, “ErrorValue”, on page 115.

22.1.1.3 Operational Model

22.1.1.3.1 Connection State Transitions

There are no connection state transitions due to this service.

© ISO/IEC 2007 – All rights reserved

Copyright International Organization for Standardization
Provided by IHS under license with ISO
No reproduction or networking permitted without license from IHS
Not for Resale

22.1.1.3.2 Device-Type Monitoring Event Sequences

Table 22-4 Call Back Non-Call-Related—Device-Type Monitoring Event Sequences

Monitored Device	Event
D1 (originatingDevice)	Call Back

22.1.1.3.3 Call-Type Monitoring Event Sequences

If the monitor object is a device, if supported, the monitoring event sequence is the same as the Device-Type Monitoring event sequence.

22.1.1.3.4 Functional Requirements

1. Only one Call Back service request (Call-Related or Non-Call-Related) can be outstanding for any originating and target device pair. It is a switching function option (as indicated by the capability exchange services) if additional Call Back service requests (Call-Related or Non-Call-Related) for that pair result in a positive or negative acknowledgement from the switching function.
2. To cancel a Call Back, the computing function shall issue the Cancel Call Back service, alternatively, the Call back should be manually canceled.

22.1.2 Call Back Message Non-Call-Related C ⟶ S

The Call Back Message Non-Call-Related service allows a computing function to instruct the switching function to leave a pre-defined message requesting that the target device call the originating device.

22.1.2.1 Service Request

Table 22-5 Call Back Message Non-Call-Related—Service Request

Parameter Name	Type	M/ O/C	Description
originatingDevice	deviceID	M	Specifies the originating device for the call back message.
targetDevice	deviceID	M	Specifies the target device for the call back message.
security	CSTASecurityData	O	Specifies timestamp information, message sequence number, and security information.
privateData	CSTAPrivateData	O	Specifies non-standardized information.

22.1.2.2 Service Response

The capability exchange services describe the type of acknowledgement model (atomic or multi-step) that the switching function supports for this service request.

22.1.2.2.1 Positive Acknowledgement

Table 22-6 Call Back Message Non-Call-Related—Positive Acknowledgement

Parameter Name	Type	M/O/ C	Description
security	CSTASecurityData	O	Specifies timestamp information, message sequence number, and security information.
privateData	CSTAPrivateData	O	Specifies non-standardized information.

© ISO/IEC 2007 – All rights reserved

Copyright International Organization for Standardization
Provided by IHS under license with ISO
No reproduction or networking permitted without license from IHS
Not for Resale

22.1.2.2.2 Negative Acknowledgement

The negative acknowledgement error codes are described in 12.2.14, “ErrorValue”, on page 115.

22.1.2.3 Operational Model

22.1.2.3.1 Connection State Transitions

There are no connection state transitions due to this service.

22.1.2.3.2 Device-Type Monitoring Event Sequences

Table 22-7 Call Back Message Non-Call-Related—Device-Type Monitoring Event Sequences

Monitored Device	Event
D1 (originatingDevice)	Call Back Message

22.1.2.3.3 Call-Type Monitoring Event Sequences

If the monitor object is a device, if supported, the monitoring event sequence is the same as the Device-Type Monitoring event sequence.

22.1.2.3.4 Functional Requirements

1. Only one Call Back service request (Call-Related or Non-Call-Related) can be outstanding for any originating and target device pair. It is a switching function option (as indicated by the capability exchange services) if additional Call Back Message service requests (Call-Related or Non-Call-Related) for that pair result in a positive or negative acknowledgement from the switching function.
2. To cancel a Call Back Message, the computing function shall issue the Cancel Call Back Message service, alternatively the Call Back should be manually canceled.
3. The Call Back Message service (Call-Related or Non-Call-Related) differs from the Call Back service in that with the Call Back Message service, no originating device will not call back the target device. Instead, this service leaves a message at the target device.
4. The switching function defines the message left at the target device. A computing function cannot use the service to specify the message content or how the switching function will notify the user (e.g., text message, voice message, indicator only).

22.1.3 Cancel Call Back

C ⟶ S

The Cancel Call Back service allows the computing function to cancel a previous (or all) Call Back feature at a device.

Note that this service cancels call backs that were created with either call related or non-call related Call Back features.

22.1.3.1 Service Request

Table 22-8 Cancel Call Back—Service Request

Parameter Name	Type	M/ O/C	Description
originatingDevice	DeviceID	M	The DeviceID of the device who initiated the original Call Back service.

© ISO/IEC 2007 – All rights reserved
--`,,```,,,,````-`-`,,`,,`,`,,`---

Copyright International Organization for Standardization
Provided by IHS under license with ISO
No reproduction or networking permitted without license from IHS
Not for Resale

Table 22-8 Cancel Call Back—Service Request (continued)

Parameter Name	Type	M/ O/C	Description
targetDevice	DeviceID	M	The DeviceID of the target of the original Call Back service. If the switching function supports clearing of all Call Back features (as indicated by the capability exchange services) and a null format DeviceID (a DeviceID with 0 characters) is provided, all of the Call Back features at the originatingDevice are cancelled.
security	CSTASecurityData	O	Specifies timestamp information, message sequence number, and security information.
privateData	CSTAPrivateData	O	Non-standardized information.

22.1.3.2 Service Response

The capability exchange services describe the type of acknowledgement model (atomic or multi-step) that the switching function supports for this service request.

22.1.3.2.1 Positive Acknowledgement

Table 22-9 Cancel Call Back—Positive Acknowledgement

Parameter Name	Type	M/ O/C	Description
security	CSTASecurityData	O	Specifies timestamp information, message sequence number, and security information.
privateData	CSTAPrivateData	O	Non-standardized information.

22.1.3.2.2 Negative Acknowledgement

The negative acknowledgement error codes are described in 12.2.14, “ErrorValue”, on page 115.

22.1.3.3 Operational Model

22.1.3.3.1 Connection State Transitions

There are no connection state transitions due to this service.

22.1.3.3.2 Device-Type Monitoring Event Sequences

Table 22-10 Cancel Call Back—Device-Type Monitoring Event Sequences

Monitored Device	Event
D1 (originatingDevice)	Call Back

22.1.3.3.3 Call-Type Monitoring Event Sequences

If the monitor object is a device, if supported, the monitoring event sequence is the same as the Device-Type Monitoring event sequence.

22.1.3.3.4 Functional Requirements

1. The originating and target DeviceIDs shall be known to the switching function.

© ISO/IEC 2007 – All rights reserved

Copyright International Organization for Standardization
Provided by IHS under license with ISO
No reproduction or networking permitted without license from IHS
Not for Resale

22.1.4 Cancel Call Back Message

C ⟶ S

The Cancel Call Back Message service allows the computing function to cancel a previous (or all) Call Back Message feature at a device.

Note that this service cancels call back messages that were created with either call related or non-call related Call Back Message features.

22.1.4.1 Service Request

Table 22-11 Cancel Call Back Message—Service Request

Parameter Name	Type	M/ O/C	Description
originatingDevice	DeviceID	M	The DeviceID of the party who initiated the original Call Back Message service.
targetDevice	DeviceID	M	The DeviceID of the target of the original Call Back Message service. If the switching function supports clearing of all Call Back Message features (as indicated by the capability exchange services) and a null format DeviceID (a DeviceID with 0 characters) is provided, all of the Call Back Message features at the originatingDevice are cancelled.
security	CSTASecurityData	O	Specifies timestamp information, message sequence number, and security information.
privateData	CSTAPrivateData	O	Specifies non-standardized information.

22.1.4.2 Service Response

The capability exchange services describe the type of acknowledgement model (atomic or multi-step) that the switching function supports for this service request.

22.1.4.2.1 Positive Acknowledgement

Table 22-12 Cancel Call Back Message—Positive Acknowledgement

Parameter Name	Type	M/ O/C	Description
security	CSTASecurityData	O	Specifies timestamp information, message sequence number, and security information.
privateData	CSTAPrivateData	O	Specifies non-standardized information.

22.1.4.2.2 Negative Acknowledgement

The negative acknowledgement error codes are described in 12.2.14, “ErrorValue”, on page 115.

22.1.4.3 Operational Model

22.1.4.3.1 Connection State Transitions

There are no connection state transitions due to this service.

© ISO/IEC 2007 – All rights reserved

Copyright International Organization for Standardization
Provided by IHS under license with ISO
No reproduction or networking permitted without license from IHS
Not for Resale

22.1.4.3.2 Device-Type Monitoring Event Sequences

Table 22-13 Cancel Call Back Message—Device-Type Monitoring Event Sequences

Monitored Device	Event
D1 (originatingDevice)	Call Back Message

22.1.4.3.3 Call-Type Monitoring Event Sequences

If the monitor object is a device, if supported, the monitoring event sequence is the same as the Device-Type Monitoring event sequence.

22.1.4.3.4 Functional Requirements

1. The originating and target DeviceIDs shall be known to the switching function.

22.1.5 Get Agent State

C ⟶ S

The Get Agent State service provides the agent state at a specified device.

22.1.5.1 Service Request

Table 22-14 Get Agent State—Service Request

Parameter Name	Type	M/ O/C	Description
device	DeviceID	M	Specifies the DeviceID of the device on which the agent state is being queried.
acdGroup	DeviceID	O	Specifies the ACD group to which the associated state applies. If provided, this DeviceID parameter will limit response data to only the group specified by the parameter.
security	CSTASecurityData	O	Specifies timestamp information, message sequence number, and security information.
privateData	CSTAPrivateData	O	Specifies non-standardized information.

22.1.5.2 Service Response

This service follows the atomic acknowledgement model for this request.

© ISO/IEC 2007 – All rights reserved

Copyright International Organization for Standardization
Provided by IHS under license with ISO
No reproduction or networking permitted without license from IHS
Not for Resale

22.1.5.2.1 Positive Acknowledgement

Table 22-15 Get Agent State—Positive Acknowledgement

Parameter Name	Type	M/ O/C	Description

agentStateList	List of Structures	M	This parameter specifies a list of agent identifiers, and/or their corresponding agent states and ACD groups for a given device. This list parameter has a maximum list size of 32 entries. Each entry contains the following components:
			• agentID (C) AgentID - Indicates the agentID of the agent with respect to the associated ACD device or ACD group. This component shall be provided if there are multiple agentIDs associated with the agent device.
			• loggedOnState (M) Boolean - Indicates the logged on state of the agent. The complete set of possible values is:
			  • TRUE - Agent is logged on.
			  • FALSE - Agent is not logged on.
			• agentInfo (O) List of Structures - A specific agent may be associated with one or more agent states. The following components are associated with each agent state:
			  • acdGroup (C) DeviceID - This component is mandatory in an entry when there is more than one entry in the list.
			  • agentState (M) Enumerated- The complete set of possible values is Busy, Not Ready, Null, Ready, and Working After Call.
			  • pendingAgentState (C) Enumerated - Indicates the pending agent state if the agentState is Busy or Working After Call. This component shall be provided if the switching function is delaying the transition to the pendingAgentState until the agent is no longer Busy or Working After Call, otherwise the parameter is optional. The possible complete set of possible values is: Working After Call, Not Ready, Ready, Null.
			  • agentStateCondition (O) Enumerated - Indicates the agent state condition associated with the agent state. The complete set of possible values is: Forced Pause, Other.

security	CSTASecurityData	O	Specifies timestamp information, message sequence number, and security information.
privateData	CSTAPrivateData	O	Specifies non-standardized information.

22.1.5.2.2 Negative Acknowledgement

The negative acknowledgement error codes are described in 12.2.14, “ErrorValue”, on page 115.

22.1.5.3 Operational Model

22.1.5.3.1 Connection State Transitions

There are no connection state transitions due to this service.

© ISO/IEC 2007 – All rights reserved

Copyright International Organization for Standardization
Provided by IHS under license with ISO
No reproduction or networking permitted without license from IHS
Not for Resale

22.1.5.3.2 Device-Type Monitoring Event Sequences

There are no events generated as a result of this service.

22.1.5.3.3 Call-Type Monitoring Event Sequences

There are no events generated as a result of this service.

22.1.5.3.4 Functional Requirements

None.

22.1.6 Get Auto Answer

C ⟶ S

The Get Auto Answer service provides the auto-answer feature status at a specified device.

The auto-answer feature is used to automatically connect to (answer) a call when it arrives at a device, without manual intervention (hands-free mode).

The service provides the number of rings at the device before the device is auto-answered.

22.1.6.1 Service Request

Table 22-16 Get Auto Answer—Service Request

Parameter Name	Type	M/ O/C	Description
device	DeviceID	M	Specifies the DeviceID of the device on which the auto-answer status is being queried.
security	CSTASecurityData	O	Specifies timestamp information, message sequence number, and security information.
privateData	CSTAPrivateData	O	Specifies non-standardized information.

22.1.6.2 Service Response

This service follows the atomic acknowledgement model for this request.

22.1.6.2.1 Positive Acknowledgement

Table 22-17 Get Auto Answer—Positive Acknowledgement

Parameter Name	Type	M/ O/C	Description
autoAnswerOn	Boolean	M	Specifies the value of the requested feature. The complete set of possible values is: • FALSE - auto answer is not enabled at the device. • TRUE - auto answer is enabled at the device.
numberOfRings	Value	O	Indicates the number of rings before a call is auto-answered.
security	CSTASecurityData	O	Specifies timestamp information, message sequence number, and security information.
privateData	CSTAPrivateData	O	Specifies non-standardized information.

© ISO/IEC 2007 – All rights reserved

Copyright International Organization for Standardization
Provided by IHS under license with ISO
No reproduction or networking permitted without license from IHS
Not for Resale

22.1.6.2.2 Negative Acknowledgement

The negative acknowledgement error codes are described in 12.2.14, “ErrorValue”, on page 115.

22.1.6.3 Operational Model

22.1.6.3.1 Connection State Transitions

There are no connection state transitions due to this service.

22.1.6.3.2 Device-Type Monitoring Event Sequences

There are no events generated as a result of this service.

22.1.6.3.3 Call-Type Monitoring Event Sequences

There are no events generated as a result of this service.

22.1.6.3.4 Functional Requirements

1. The auto-answer feature is different than the auto-originate feature:
   a. Auto-originate (specified as the autoOriginate parameter in some Call Control services such as the Make Call service) is used to connect the originating device to the call. It applies only to the originating device (not to the called device) for the specified call.
   b. auto-answer applies to all calls that arrive at a device when the device is being called by another device. Auto-answer is a mode that exists until it is changed. The auto-answer mode may be changed via the Set Auto Answer service.

22.1.7 Get Auto Work Mode

The Get Auto Work Mode service provides the auto-work mode feature status at a specified device.

The auto-work feature is used to automatically transition an agent state to the WorkingAfterCall state (from the Busy state) after an agent is finished with a call. The feature may also automatically transition the agent state from WorkingAfterCall (to Ready, for example) after a certain amount of time.

22.1.7.1 Service Request

Table 22-18 Get Auto Work Mode—Service Request

Parameter Name	Type	M/ O/C	Description
device	DeviceID	M	Specifies the DeviceID of the device on which the auto-work mode status is being queried. The DeviceID may refer to an ACD device, ACD group, or to an Agent.
security	CSTASecurityData	O	Specifies timestamp information, message sequence number, and security information.
privateData	CSTAPrivateData	O	Specifies non-standardized information.

22.1.7.2 Service Response

This service follows the atomic acknowledgement model for this request.

© ISO/IEC 2007 – All rights reserved

Copyright International Organization for Standardization
Provided by IHS under license with ISO
No reproduction or networking permitted without license from IHS
Not for Resale

22.1.7.2.1 Positive Acknowledgement

Table 22-19 Get Auto Work Mode—Positive Acknowledgement

Parameter Name	Type	M/ O/C	Description
autoWorkOn	Boolean	M	Specifies the value of the requested feature. The complete set of possible values is: • FALSE - Auto-work mode off. • TRUE - Auto-work mode on.
autoWorkInterval	Value	O	Indicates the number of seconds that the agent state remains in the AfterCallWork state. The value of zero indicates that the auto work mode feature does not automatically cause the transition of the agent state from WorkingAfterCall (i.e., the transition must be done manually or via the Set Agent State service).
security	CSTASecurityData	O	Specifies timestamp information, message sequence number, and security information.
privateData	CSTAPrivateData	O	Specifies non-standardized information.

22.1.7.2.2 Negative Acknowledgement

The negative acknowledgement error codes are described in 12.2.14, “ErrorValue”, on page 115.

22.1.7.3 Operational Model

22.1.7.3.1 Connection State Transitions

There are no connection state transitions due to this service.

22.1.7.3.2 Device-Type Monitoring Event Sequences

There are no events generated as a result of this service.

22.1.7.3.3 Call-Type Monitoring Event Sequences

There are no events generated as a result of this service.

22.1.7.3.4 Functional Requirements

1. When an agent state transitions to WorkingAfterCall state due to the auto work feature, the state may be terminated before the auto work timer expires by changing the agent state manually or via the Set Agent State service.

22.1.8 Get CallBack

The Get CallBack service provides the list of callbacks at a specified device.

This service provides callbacks where the specified device is either the device that originated the callback or is a device that is the target of the callback.

This service provides call backs that were created with either call related or non-call related call back features. The service also provides callbacks that either involves or does not involve (pre-defined) messages.

--`,,```,,,,````-`-`,,`,,`,`,,`---
© ISO/IEC 2007 – All rights reserved
Copyright International Organization for Standardization
Provided by IHS under license with ISO
No reproduction or networking permitted without license from IHS
Not for Resale

22.1.8.1 Service Request

Table 22-20 Get CallBack —Service Request

Parameter Name	Type	M/ O/C	Description
device	DeviceID	M	Specifies the device to query for callbacks.
security	CSTASecurityData	O	Specifies timestamp information, message sequence number, and security information.
privateData	CSTAPrivateData	O	Specifies non-standardized information.

22.1.8.2 Service Response

This service follows the atomic acknowledgement model for this request.

22.1.8.2.1 Positive Acknowledgement

Table 22-21 Get CallBack—Positive Acknowledgement

Parameter Name	Type	M/ O/C	Description

callBackList	List of Structures	C	Specifies a list of callbacks that involve the specified device.
			Each entry consists of the following:
			• originatingDevice DeviceID (M) - specifies the device that originated the callback.
			• targetDevice DeviceID (M) - specifies the device which is the target of the callback.
			• callBackMessageIndicator Boolean (O) - indicates if this callback is a callback message type. Shall be one of the following:
			  • TRUE - This callback is a callBack message.
			  • FALSE - This callback is not a callBack message (default).
			This parameter is mandatory if there is at least one callback that involves the specified device. This parameter is not provided if there are no callbacks that involve the specified device.

security	CSTASecurityData	O	Specifies timestamp information, message sequence number, and security information.
privateData	CSTAPrivateData	O	Specifies non-standardized information.

22.1.8.2.2 Negative Acknowledgement

The negative acknowledgement error codes are described in 12.2.14, “ErrorValue”, on page 115.

22.1.8.3 Operational Model

22.1.8.3.1 Connection State Transitions

There are no connection state transitions due to this service.

22.1.8.3.2 Device-Type Monitoring Event Sequences

There are no events generated as a result of this service.

© ISO/IEC 2007 – All rights reserved

Copyright International Organization for Standardization
Provided by IHS under license with ISO
No reproduction or networking permitted without license from IHS
Not for Resale

22.1.8.3.3 Call-Type Monitoring Event Sequences

There are no events generated as a result of this service.

22.1.8.3.4 Functional Requirements

1. Once a callback has been deactivated the callback is no longer provided by this service. See 6.7.4 for examples of how callbacks are deactivated.
2. Each entry in the callBack list must include the device in the service request as either the originatingDevice or as the targetDevice.

22.1.9 Get Caller ID Status C → S

The Get Caller ID Status service provides the Caller ID status at the specified device. When the status is set to TRUE, the device's Caller ID will be provided on all calls originating from it. When the status is set to FALSE, the switching function will not provide the device's Caller ID on calls, which originate from it, to the called device.

22.1.9.1 Service Request

Table 22-22 Get Caller ID Status—Service Request

Parameter Name	Type	M/ O/C	Description
device	DeviceID	M	Specifies the DeviceID of the device on which the Caller ID status feature is being queried.
security	CSTASecurityData	O	Specifies timestamp information, message sequence number, and security information.
privateData	CSTAPrivateData	O	Specifies non-standardized information.

22.1.9.2 Service Response

This service follows the atomic acknowledgement model for this request.

22.1.9.2.1 Positive Acknowledgement

Table 22-23 Get Caller ID Status—Positive Acknowledgement

Parameter Name	Type	M/ O/C	Description
callerIDProvided	Boolean	M	Specifies the value of the requested feature. The complete set of possible values is: • FALSE - Caller ID is not provided on calls originating from this device. • TRUE - Caller ID is provided on calls originating from this device.
security	CSTASecurityData	O	Specifies timestamp information, message sequence number, and security information.
privateData	CSTAPrivateData	O	Specifies non-standardized information.

22.1.9.2.2 Negative Acknowledgement

The negative acknowledgement error codes are described in 12.2.14, “ErrorValue”, on page 115.

© ISO/IEC 2007 – All rights reserved

Copyright International Organization for Standardization
Provided by IHS under license with ISO
No reproduction or networking permitted without license from IHS
Not for Resale

22.1.9.3 Operational Model

22.1.9.3.1 Connection State Transitions

There are no connection state transitions due to this service.

22.1.9.3.2 Device-Type Monitoring Event Sequences

There are no events generated as a result of this service.

22.1.9.3.3 Call-Type Monitoring Event Sequences

There are no events generated as a result of this service.

22.1.10 Get Do Not Disturb

C ⟶ S

The Get Do Not Disturb service provides the do not disturb feature status at a specified device.

The do not disturb feature is used to prevent incoming calls at a device.

22.1.10.1 Service Request

Table 22-24 Get Do Not Disturb—Service Request

Parameter Name	Type	M/ O/C	Description
device	DeviceID	M	Specifies the DeviceID of the device on which the do not disturb feature is being queried.
security	CSTASecurityData	O	Specifies timestamp information, message sequence number, and security information.
privateData	CSTAPrivateData	O	Specifies non-standardized information.

22.1.10.2 Service Response

This service follows the atomic acknowledgement model for this request.

22.1.10.2.1 Positive Acknowledgement

Table 22-25 Get Do Not Disturb—Positive Acknowledgement

Parameter Name	Type	M/ O/C	Description
doNotDisturbOn	Boolean	M	Specifies the value of the requested feature. The complete set of possible values is: • FALSE - Do not disturb feature is not enabled. • TRUE - Do not disturb feature is enabled.

© ISO/IEC 2007 – All rights reserved

Copyright International Organization for Standardization
Provided by IHS under license with ISO
No reproduction or networking permitted without license from IHS
Not for Resale

Table 22-25 Get Do Not Disturb—Positive Acknowledgement (continued)

Parameter Name	Type	M/ O/C	Description
callOrigination	Bitmap	O	Specifies a bitmap where each bit represents a different type of call origination on which the do not disturb feature is to be honoured. The following is the list of bits (multiple bits may be set): • Internal - Calls originating from within the switching sub-domain. • External - Calls originating from outside the switching sub-domain. If this parameter is not supported, the type of call origination on which do not disturb is honoured is switching function specific (as indicated in the capability exchange services). If this parameter is supported, but not provided by the switching function, then the default value for the bitmap is all bits ON (all types of call origination are honoured).
callingDeviceList	List of DeviceIDs	O	Specifies the calling device(s) from which the do not disturb feature is to be honoured (i.e., calls originating from this device will not be delivered). If this parameter is supported but not provided, then the do not disturb feature is being processed without regard to the calling device.
security	CSTASecurityData	O	Specifies timestamp information, message sequence number, and security information.
privateData	CSTAPrivateData	O	Specifies non-standardized information.

22.1.10.2.2 Negative Acknowledgement

The negative acknowledgement error codes are described in 12.2.14, “ErrorValue”, on page 115.

22.1.10.3 Operational Model

22.1.10.3.1 Connection State Transitions

There are no connection state transitions due to this service.

22.1.10.3.2 Device-Type Monitoring Event Sequences

There are no events generated as a result of this service.

22.1.10.3.3 Call-Type Monitoring Event Sequences

There are no events generated as a result of this service.

22.1.11 Get Forwarding

C ⟶ S

The Get Forwarding service provides the forwarding feature status at a specified device. The status returned may consist of one or more forwarding types that are active at the specified device based on user defined conditions.

The forwarding feature is used to redirect calls that arrive at a specified device to an alternate destination.

© ISO/IEC 2007 – All rights reserved

Copyright International Organization for Standardization
Provided by IHS under license with ISO
No reproduction or networking permitted without license from IHS
Not for Resale

22.1.11.1 Service Request

Table 22-26 Get Forwarding—Service Request

Parameter Name	Type	M/ O/C	Description
device	DeviceID	M	Specifies the device on which to query.
security	CSTASecurityData	O	Specifies timestamp information, message sequence number, and security information.
privateData	CSTAPrivateData	O	Specifies non-standardized information.

22.1.11.2 Service Response

This service follows the atomic acknowledgement model for this request.

© ISO/IEC 2007 – All rights reserved

Copyright International Organization for Standardization
Provided by IHS under license with ISO
No reproduction or networking permitted without license from IHS
Not for Resale

22.1.11.2.1 Positive Acknowledgement

Table 22-27 Get Forwarding—Positive Acknowledgement

Parameter Name	Type	M/ O/C	Description

forwardList	List of Structures	M	The list contains one structure per forwardingType/ forwardDN combination. The structure has the following components:
			• forwardingType (C) Enumerated. Specifies the type of forwarding. It shall be provided for user specified settings and it is optional for switching function default settings (see Functional Requirement #1). The “internal” and “external” types refer to the type of call origination (for example an external call) that will be forwarded if it matches a forwarding type (for example forwardImmExt) enabled at the device. The complete set of possible values is:
			  • forwardImmediate
			  • forwardBusy
			  • forwardDND
			  • forwardNoAns
			  • forwardBusyInt
			  • forwardBusyExt
			  • forwardDNDInt
			  • forwardDNDExt
			  • forwardNoAnsInt
			  • forwardNoAnsExt
			  • forwardImmInt
			  • forwardImmExt
			• forwardStatus (M) Boolean. Indicates the status of the forwarding type. The complete set of possible values is:
			  • FALSE - the forwarding type is deactivated.
			  • TRUE - the forwarding type is active.
			• forwardDN (C) DeviceID. Specifies the destination to which calls are forwarded. It shall be provided for user specified settings and it is optional for switching function default settings (see Functional Requirement #1).
			• forwardDefault (O) Enumerated. Specifies that the provided forwardingType and/or the forwardDN is a default setting. If the forwardDefault parameter is supported by the switching function and it is not present, the information is not a default setting. The complete set of possible values is:
			  • defaultForwardingTypeAndForwardDN
			  • defaultForwardingType
			  • defaultForwardDN
			  See Functional Requirement #2.
			• ringCount (O) Value (1...100). Specifies the number of times that the device rings prior to forward no answer.
			  See Functional Requirement C.
			• ringDuration (O) Value. Specifies the time (in seconds) that the device rings prior to forward no answer. ringDuration should not be provided if ringCount is provided.
			  See Functional Requirement C.

--`,,```,,,,````-`-`,,`,,`,`,,`---
© ISO/IEC 2007 – All rights reserved
Copyright International Organization for Standardization
Provided by IHS under license with ISO
No reproduction or networking permitted without license from IHS
Not for Resale

Table 22-27 Get Forwarding—Positive Acknowledgement (continued)

Parameter Name	Type	M/ O/C	Description
security	CSTASecurityData	O	Specifies timestamp information, message sequence number, and security information.
privateData	CSTAPrivateData	O	Specifies non-standardized information.

22.1.11.2.2 Negative Acknowledgement

The negative acknowledgement error codes are described in 12.2.14, “ErrorValue”, on page 115.

22.1.11.3 Operational Model

22.1.11.3.1 Connection State Transitions

There are no connection state transitions due to this service.

22.1.11.3.2 Device-Type Monitoring Event Sequences

There are no events generated as a result of this service.

22.1.11.3.3 Call-Type Monitoring Event Sequences

There are no events generated as a result of this service.

22.1.11.3.4 Functional Requirements

1. There are two possible levels of forwarding settings (see 6.7.1, “Forwarding”, on page 69) that can be supported by a switching function. (refer to the capability exchange services for the levels supported by an implementation):
   - switching function default settings - a single set of forwarding type/forwarding destination combinations that can be activated/deactivated as a set.
   - user specified settings - individual forwarding type/forwarding destination combinations that can be activated/deactivated one at a time.
2. The forwardDefault component in the forwardList indicates if information in the forwardList is the default information associated with the device (in the case where the forwarding settings have never been changed, for example) and what forwarding level the information is associated with. The possible values for forwardDefault are:
   - defaultForwardingTypeAndForwardDN - indicates that the information is associated with the switching function default settings.
   - defaultForwardingType - indicates that forwardingType is a default value associated with user specified settings.
   - defaultForwardDN - indicates that forwardDN is a default value associated with user specified settings.
3. When supported, ringCount or ringDuration is provided for the following forwarding types:
   - forwardingType (forwardNoAns)
   - forwardingType (forwardNoAnsInt)
   - forwardingType (forwardNoAnsExt)

© ISO/IEC 2007 – All rights reserved

Copyright International Organization for Standardization
Provided by IHS under license with ISO
No reproduction or networking permitted without license from IHS
Not for Resale

22.1.12 Get Last Number Dialled

C ⟶ S

The Get Last Number Dialled service provides the last number dialled at a specified device.

22.1.12.1 Service Request

Table 22-28 Get Last Number Dialled—Service Request

Parameter Name	Type	M/ O/C	Description
device	DeviceID	M	Specifies the DeviceID of the device on which the last number is being queried.
security	CSTASecurityData	O	Specifies timestamp information, message sequence number, and security information.
privateData	CSTAPrivateData	O	Specifies non-standardized information.

22.1.12.2 Service Response

This service follows the atomic acknowledgement model for this request.

22.1.12.2.1 Positive Acknowledgement

Table 22-29 Get Last Number Dialled—Positive Acknowledgement

Parameter Name	Type	M/ O/C	Description
numberDialled	DeviceID	M	Indicates the last number dialled. “Unknown” is provided if the switching function cannot accurately provide the information.
security	CSTASecurityData	O	Specifies timestamp information, message sequence number, and security information.
privateData	CSTAPrivateData	O	Specifies non-standardized information.

22.1.12.2.2 Negative Acknowledgement

The negative acknowledgement error codes are described in 12.2.14, “ErrorValue”, on page 115.

22.1.12.3 Operational Model

22.1.12.3.1 Connection State Transitions

There are no connection state transitions due to this service.

22.1.12.3.2 Device-Type Monitoring Event Sequences

There are no events generated as a result of this service.

22.1.12.3.3 Call-Type Monitoring Event Sequences

There are no events generated as a result of this service.

© ISO/IEC 2007 – All rights reserved

Copyright International Organization for Standardization
Provided by IHS under license with ISO
No reproduction or networking permitted without license from IHS
Not for Resale

22.1.12.3.4 Functional Requirements

1. The last number dialled may be a manually dialled number or may be the originally called device provided in services such as Consultation Call, Make Call, and Make Predictive Call, whichever occurred most recently.

22.1.13 Get Routeing Mode C ⟶ S

The Get Routeing Mode service indicates if a device is able to make routeing requests to the computing function.

For example, devices that are able to make routeing requests will request instructions (see 20.2.4, “Route Request”, on page 408) when a call arrives at the device.

22.1.13.1 Service Request

Table 22-30 Get Routeing Mode—Service Request

Parameter Name	Type	M/ O/C	Description
device	DeviceID	M	Specifies the DeviceID of the device on which the routeing mode is being queried.
security	CSTASecurityData	O	Specifies timestamp information, message sequence number, and security information.
privateData	CSTAPrivateData	O	Specifies non-standardized information.

22.1.13.2 Service Response

This service follows the atomic acknowledgement model for this request.

22.1.13.2.1 Positive Acknowledgement

Table 22-31 Get Routeing Mode—Positive Acknowledgement

Parameter Name	Type	M/ O/C	Description
routeingMode	Boolean	M	Indicates the routeing mode of the device. The complete set of possible values is: • TRUE - the device will request routeing instructions when a call arrives at the device. • FALSE - the device will not request routeing instructions.
security	CSTASecurityData	O	Specifies timestamp information, message sequence number, and security information.
privateData	CSTAPrivateData	O	Specifies non-standardized information.

22.1.13.2.2 Negative Acknowledgement

The negative acknowledgement error codes are described in 12.2.14, “ErrorValue”, on page 115.

22.1.13.3 Operational Model

22.1.13.3.1 Connection State Transitions

There are no connection state transitions due to this service.

© ISO/IEC 2007 – All rights reserved

--`,,```,,,,````-`-`,,`,,`,`,,`---
Copyright International Organization for Standardization
Provided by IHS under license with ISO
No reproduction or networking permitted without license from IHS
Not for Resale

22.1.13.3.2 Device-Type Monitoring Event Sequences

There are no events generated as a result of this service.

22.1.13.3.3 Call-Type Monitoring Event Sequences

There are no events generated as a result of this service.

22.1.13.3.4 Functional Requirements

1. The routeing mode may be set by using the Annex B service or it may be set by the switching function based upon configuration information, for example.

22.1.14 Set Agent State C → S

The Set Agent State service requests a new agent state at a specified device. In the case where an ACD agent is involved with an ACD call, the transition to the requested state may or may not occur until the current connection transitions to the null state.

22.1.14.1 Service Request

Table 22-32 Set Agent State—Service Request

Parameter Name	Type	M/ O/C	Description
device	DeviceID	M	Specifies the DeviceID for the ACD agent for which the state is to be changed. The device may also be an ACD device or an ACD group device if allowed by the switching function, as indicated by the capability exchange services.
requestedAgentState	Enumerated	M	Specifies the requested agent state. The complete set of possible values is: • loggedOn - Requests that the agent be logged on. • loggedOff - Requests that the agent be logged off. • notReady - Requests that the agent be placed into the notReady agent state. • ready - Requests that the agent be placed into the ready state. • workingAfterCall - Requests that the agent be placed into the workingAfterCall state. Note that the list of values in this parameter is different from the list of values in the agentState parameter in the Get Agent State service.
agentID	AgentID	C	Specifies the agent identifier. This parameter must be provided if there are multiple agentIDs associated with the device.
password	AgentPassword	O	Specifies the agent password. This parameter can only be provided when the requestedAgentState is loggedOn or loggedOff. Note that the switching function may omit this information in subsequent events for security reasons, etc. This parameter type is a character string. The maximum length supported by the switching function is provided via the capabilities exchange services.

© ISO/IEC 2007 – All rights reserved

Copyright International Organization for Standardization
Provided by IHS under license with ISO
No reproduction or networking permitted without license from IHS
Not for Resale

Table 22-32 Set Agent State—Service Request (continued)

Parameter Name	Type	M/ O/C	Description
group	DeviceID	C	Specifies the agent ACD group that the agent is logging in or out of. The presence or absence of this parameter indicates the type of agent log on model. Refer to the modeling concepts in 6.1.1.6, “Agent”, on page 38 for the when this parameter must be provided.
security	CSTASecurityData	O	Specifies timestamp information, message sequence number, and security information.
privateData	CSTAPrivateData	O	Specifies non-standardized information.

22.1.14.2 Service Response

The capability exchange services describe the type of acknowledgement model (atomic or multi-step) that the switching function supports for this service request.

22.1.14.2.1 Positive Acknowledgement

Table 22-33 Set Agent State—Positive Acknowledgement

Parameter Name	Type	M/ O/C	Description
pendingAgentState	Enumerated	C	Indicates the agent state that the agent will transition to after the agent state is no longer Busy or Working After Call. The complete set of possible values is: • Working After Call • Not Ready • Ready • Null This parameter shall be provided if the switching function is delaying the transition to the pendingAgentState until the agent is no longer Busy or Working After Call, otherwise the parameter is optional.
security	CSTASecurityData	O	Specifies timestamp information, message sequence number, and security information.
privateData	CSTAPrivateData	O	Specifies non-standardized information.

22.1.14.2.2 Negative Acknowledgement

The negative acknowledgement error codes are described in 12.2.14, “ErrorValue”, on page 115.

22.1.14.3 Operational Model

22.1.14.3.1 Connection State Transitions

There are no connection state transitions due to this service.

--`,,```,,,,````-`-`,,`,,`,`,,`---

© ISO/IEC 2007 – All rights reserved

Copyright International Organization for Standardization
Provided by IHS under license with ISO
No reproduction or networking permitted without license from IHS
Not for Resale

22.1.14.3.2 Device-Type Monitoring Event Sequences

Table 22-34 Set Agent State—Device-Type Monitoring Event Sequences

Monitored Device	Event
D1 (device)	The event corresponding to the value of the requestedAgentState parameter (i.e., Agent Logged Off, Agent Logged On, Agent Not Ready, Agent Ready, Agent Working After Call). Note that if the current agent state is Busy or WorkingAfterCall, then (depending upon the switching function, as indicated by the capability exchange services) the transition to the requestedAgentState may be delayed until the agent is no longer Busy or WorkingAfterCall. See Functional requirement #1.

22.1.14.3.3 Call-Type Monitoring Event Sequences

If the monitor object is a device, if supported, the monitoring event sequence is the same as the Device-Type Monitoring event sequence.

22.1.14.3.4 Functional Requirements

1. If the device parameter in the service request is an ACD device or an ACD group, (if allowed by the switching function, as indicated by the capability exchange services), then the service shall be applied to all member/associated devices as if the service were applied to each member/associated device individually. If the device parameter in the service request is an ACD group or ACD device and the switching function does not allow such a device in this service, it shall reject the service request.
2. If this service is issued while the agent is Busy or WorkingAfterCall, the transition to the requestedAgentState may be delayed (depending upon the switching function, as indicated by the capability exchange services) until the agent is no longer Busy or in Agent Working After Call. If the switching function delays the transition in this manner, and if there is a monitor on the Agent Busy or the Agent Working After Call event, the switching function shall generate a Agent Busy or Agent Working After Call event with the pendingAgentState parameter that reflects the requestedAgentState.
3. If there is a pendingAgentState while the agent state is Busy or WorkingAfterCall, and a Set Agent State is received, the switching function shall override the previous pendingAgentState with the new requestedAgentState and generate an Agent Busy or an Agent Working After Call event that reflects the new pendingAgentState. If the switching function is unable to override the previous pendingAgentState, it shall reject the service request.

Tables 22-35 through Table 22-38 illustrate various examples of agent log on/off.

In these tables, the notation G1 and G2 refers to an ACD group and the number in parenthesis refers to the acdGroup parameter in the agent events.

The agent log on models are described in 6.1.1.6, “Agent”, on page 38.

Table 22-35 Agent Logs On and Then Logs Off an ACD Device Without Entering an ACD Group

Action	Agent Events	Agent Logged On State	Agent State	Comment
pre ACD		False	G1: - G2: -	Agent is not yet associated with an ACD device.
Agent logs on to an ACD device	Agent Logged On ()	True	G1: - G2: -	Agent becomes associated with the activities of the ACD device but is not associated with an ACD group.

© ISO/IEC 2007 – All rights reserved

Copyright International Organization for Standardization
Provided by IHS under license with ISO
No reproduction or networking permitted without license from IHS
Not for Resale

Table 22-35 Agent Logs On and Then Logs Off an ACD Device Without Entering an ACD Group

Action	Agent Events	Agent Logged On State	Agent State	Comment
Agent logs off of an ACD device	Agent Logged Off ()	False	G1: - G2: -	Agent logs off the ACD device.

Table 22-36 Agent Logs On to an ACD Device and then Logs On to Two ACD Groups (Explicit/Two Step Model)

Action	Events	Logged On State	Agent State	Comment
pre ACD		False	G1: - G2: -	Agent is not yet associated with an ACD device.
Agent logs on to an ACD device	Agent Logged On ()	True	G1: - G2: -	Agent becomes associated with the activities of the ACD device but is not yet associated with an ACD group.
Agent logs on to an ACD group	Agent Logged On (G1) Agent Not Ready (G1)	True	G1:NotReady G2: -	Agent logs on to ACD group 1 and becomes associated with the activities of the ACD group.
Agent logs on to another ACD group	Agent Logged On (G2) Agent Not Ready (G2)	True	G1:NotReady G2:NotReady	Agent logs on to ACD group 2 and becomes available for ACD group 2 activity.
Agent logs off of an ACD group	Agent Logged Off (G2)	True	G1:NotReady G2: -	Agent logs off of just ACD Group 2, stays in ACD Group 1.
Agent logs off another ACD group	Agent Logged Off (G1)	True	G1: - G2: -	Agent logs off of last ACD Group 1, stays logged on to the ACD device.
Agent logs off an ACD device	Agent Logged Off ()	False	G1: - G2: -	Agent logs off the ACD device.

Table 22-37 Agent Logs On to an ACD Group Directly (Explicit/One Step Model)

Action	Events	Logged On State	Agent State	Comment
pre ACD		False	G1: - G2: -	Agent is not yet associated with an ACD device.
Agent logs on to ACD group 2	Agent Logged On () optional Agent Logged On (G2) Agent Not Ready (G2)	True	G1: - G2: NR	Agent logs on to ACD Group 2 directly. Note that the “Agent Logged On ()” event is optional.

© ISO/IEC 2007 – All rights reserved

Copyright International Organization for Standardization
Provided by IHS under license with ISO
No reproduction or networking permitted without license from IHS
Not for Resale

Table 22-37 Agent Logs On to an ACD Group Directly (Explicit/One Step Model) (continued)

Action	Events	Logged On State	Agent State	Comment
Agent logs off.	Agent Logged Off (G2) optional Agent Logged Off ()	False	G1: - G2: -	Agent logs off the ACD device. Note that the “Agent Logged Off (G2)” event is optional.

Table 22-38 Agent Logs On to the ACD Device and is Automatically Logged On to ACD Groups (Implicit/One Step Model)

Action	Events	Logged On State	Agent State	Comment
pre ACD		False	G1: - G2: -	Agent is not yet associated with an ACD device.
Agent logs on to an ACD group (ACD group not specified)	Agent Logged On () optional Agent Logged On (G1) Agent Logged On (G2) Agent Not Ready (G1) Agent Not Ready (G2)	True	G1:NotReady G2:NotReady	Agent logs on to ACD and is automatically logged onto groups by the system. Note that the “Agent Logged On ()” event is optional.
Agent logs off.	Agent Logged Off (G1) optional Agent Logged Off (G2) optional Agent Logged Off ()	False	G1: - G2: -	Agent logs off ACD device. Note that the “Agent Logged Off (G1)” and the “Agent Logged Off (G2)”events are optional.

22.1.15 Set Auto Answer

C ⟶ S

The Set Auto Answer service allows the computing function to control the auto-answer feature at a specified device. The auto-answer feature is used to automatically connect to (answer) a call when it arrives at a device, without manual intervention (handsfree operation).

22.1.15.1 Service Request

Table 22-39 Set Auto Answer—Service Request

Parameter Name	Type	M/ O/C	Description
device	DeviceID	M	Specifies the device on which to set the feature.
autoAnswerOn	Boolean	M	Specifies the requested value of the auto-answer feature. The complete set of possible values is: • FALSE - Auto-answer off. • TRUE - Auto-answer on.
numberOfRings	Value	O	Indicates the number of rings before a call is auto-answered. If not provided (and the parameter is supported), the default will be zero (0).
security	CSTASecurityData	O	Specifies timestamp information, message sequence number, and security information.

© ISO/IEC 2007 – All rights reserved

Copyright International Organization for Standardization
Provided by IHS under license with ISO
No reproduction or networking permitted without license from IHS
Not for Resale

Table 22-39 Set Auto Answer—Service Request (continued)

Parameter Name	Type	M/ O/C	Description
privateData	CSTAPrivateData	O	Specifies non-standardized information.

22.1.15.2 Service Response

The capability exchange services describe the type of acknowledgement model (atomic or multi-step) that the switching function supports for this service request.

22.1.15.2.1 Positive Acknowledgement

Table 22-40 Set Auto Answer—Positive Acknowledgement

Parameter Name	Type	M/ O/C	Description
security	CSTASecurityData	O	Specifies timestamp information, message sequence number, and security information.
privateData	CSTAPrivateData	O	Specifies non-standardized information.

22.1.15.2.2 Negative Acknowledgement

The negative acknowledgement error codes are described in 12.2.14, “ErrorValue”, on page 115.

22.1.15.3 Operational Model

22.1.15.3.1 Connection State Transitions

There are no connection state transitions due to this service.

22.1.15.3.2 Device-Type Monitoring Event Sequences

Table 22-41 Set Auto Answer—Device-Type Monitoring Event Sequences

Monitored Device	Event
D1 (device)	Auto Answer

22.1.15.3.3 Call-Type Monitoring Event Sequences

If the monitor object is a device, if supported, the monitoring event sequence is the same as the Device-Type Monitoring event sequence.

22.1.15.3.4 Functional Requirements

1. The auto-answer feature is different than the auto-originate feature:
   - auto-originate (specified as the autoOriginate parameter in some Call Control services such as the Make Call service) is used to connect the originating device to the call. It applies only to the originating device (not to the called device) for the specified call.
   - auto-answer applies to all calls that arrive at a device when the device is being called by another device. Auto-answer is a mode that exists until it is changed. The auto-answer mode may be changed via the Set Auto Answer service.

© ISO/IEC 2007 – All rights reserved

Copyright International Organization for Standardization
Provided by IHS under license with ISO
No reproduction or networking permitted without license from IHS
Not for Resale

22.1.16 Set Auto Work Mode

C ⟶ S

The Set Auto Work Mode service allows the computing function to control the auto-work feature at a specified device. The auto-work feature is used to automatically transition an agent state to the WorkingAfterCall state (from the Busy state) after an agent has finished with a call. The feature may also automatically transition the agent state from WorkingAfterCall (to Ready, for example) after a certain amount of time.

22.1.16.1 Service Request

Table 22-42 Set Auto Work Mode —Service Request

Parameter Name	Type	M/ O/C	Description
device	DeviceID	M	Specifies the DeviceID for the ACD agent for which the auto work mode is to be changed. The device may also be an ACD device or an ACD group device if allowed by the switching function, as indicated by the capability exchange services.
autoWorkOn	Boolean	M	Specifies the requested value of the auto-work feature. The complete set of possible values is: • FALSE - Auto-work off. • TRUE - Auto-work on.
autoWorkInterval	Value (0..6000)	O	Indicates the number of seconds that the agent state remains in the WorkingAfterCall state. The value of zero indicates that the auto work mode feature does not automatically cause the transition of the agent state out of the WorkingAfterCall state (i.e., the transition must be done manually or via the Set Agent State service). If this parameter is not provided, a switching function default value is used.
security	CSTASecurityData	O	Specifies timestamp information, message sequence number, and security information.
privateData	CSTAPrivateData	O	Specifies non-standardized information.

22.1.16.2 Service Response

The capability exchange services describe the type of acknowledgement model (atomic or multi-step) that the switching function supports for this service request.

22.1.16.2.1 Positive Acknowledgement

Table 22-43 Set Auto Work Mode—Positive Acknowledgement

Parameter Name	Type	M/ O/C	Description
security	CSTASecurityData	O	Specifies timestamp information, message sequence number, and security information.
privateData	CSTAPrivateData	O	Specifies non-standardized information.

22.1.16.2.2 Negative Acknowledgement

The negative acknowledgement error codes are described in 12.2.14, “ErrorValue”, on page 115.

© ISO/IEC 2007 – All rights reserved
Copyright International Organization for Standardization
Provided by IHS under license with ISO
No reproduction or networking permitted without license from IHS
Not for Resale

22.1.16.3 Operational Model

22.1.16.3.1 Connection State Transitions

There are no connection state transitions due to this service.

22.1.16.3.2 Device-Type Monitoring Event Sequences

Table 22-44 Set Auto Work Mode—Device-Type Monitoring Event Sequences

Monitored Device	Event
D1 (device)	Auto Work Mode

22.1.16.3.3 Call-Type Monitoring Event Sequences

If the monitor object is a device, if supported, the monitoring event sequence is the same as the Device-Type Monitoring event sequence.

22.1.16.3.4 Functional Requirements

1. Note that this service is different from the Set Agent State service in that the Set Agent State service causes a transition to a specified agent state (WorkingAfterCall, for example). The Set Auto Work Mode service controls how the switch automatically transitions to/from the WorkingAfterCall state after an agent completes a call.
2. When an agent state transitions to WorkingAfterCall due to the auto-work feature, the WorkingAfterCall state may be terminated before the auto work timer expires by setting the agent to another agent state manually or via the Set Agent State service.
3. If the Auto Work Mode is disabled while the agent state is already in the WorkingAfterCall state, the agent state shall remain in the WorkingAfterCall state until changed (e.g., manually or via the Set Agent State service).
4. The setting of the value of the auto-work mode feature as a result of this service is persistent (i.e., it remains as specified in the service request until it is changed manually or by the Set Agent State service).

22.1.17 Set Caller ID Status

C ⟶ S

This Set Caller ID Status service sets the Caller ID Status at the specified device. When the status is set to TRUE, the device's Caller ID will be provided on all calls originating from it. When the status is set to FALSE, the switching function will not provide the device's Caller ID on calls, which originate from it, to the called device.

22.1.17.1 Service Request

Table 22-45 Set Caller ID Status—Service Request

Parameter Name	Type	M/ O/C	Description
device	DeviceID	M	Specifies the device on which to query.

© ISO/IEC 2007 – All rights reserved

Copyright International Organization for Standardization
Provided by IHS under license with ISO
No reproduction or networking permitted without license from IHS
Not for Resale

Table 22-45 Set Caller ID Status—Service Request (continued)

Parameter Name	Type	M/ O/C	Description
callerIDProvided	Boolean	M	Specifies whether this device's caller ID value is being provided on outbound calls. The complete set of possible values is: • FALSE - Caller ID is not to be provided on call(s) originating from this device. • TRUE - Caller ID is to be provided on call(s) originating from this device.
security	CSTASecurityData	O	Specifies timestamp information, message sequence number, and security information.
privateData	CSTAPrivateData	O	Specifies non-standardized information.

22.1.17.2 Service Response

The capability exchange services describe the type of acknowledgement model (atomic or multi-step) that the switching function supports for this service request.

22.1.17.2.1 Positive Acknowledgement

Table 22-46 Set Caller ID Status—Positive Acknowledgement

Parameter Name	Type	M/ O/C	Description
security	CSTASecurityData	O	Specifies timestamp information, message sequence number, and security information.
privateData	CSTAPrivateData	O	Specifies non-standardized information.

22.1.17.2.2 Negative Acknowledgement

The negative acknowledgement error codes are described in 12.2.14, "ErrorValue", on page 115.

22.1.17.3 Operational Model

22.1.17.3.1 Connection State Transitions

There are no connection state transitions due to this service.

22.1.17.3.2 Device-Type Monitoring Event Sequences

Table 22-47 Set Caller ID Status—Device-Type Monitoring Event Sequences

Monitored Device	Event
D1 (device)	Caller ID Status

22.1.17.3.3 Call-Type Monitoring Event Sequences

If the monitor object is a device, if supported, the monitoring event sequence is the same as the Device-Type Monitoring event sequence.

© ISO/IEC 2007 – All rights reserved

Copyright International Organization for Standardization
Provided by IHS under license with ISO
No reproduction or networking permitted without license from IHS
Not for Resale

22.1.18 Set Do Not Disturb

C ⟶ S

The Set Do Not Disturb service allows the computing function to control the do not disturb feature at a specified device. The do not disturb feature is typically used to prevent a specified device from being alerted.

22.1.18.1 Service Request

Table 22-48 Set Do Not Disturb—Service Request

Parameter Name	Type	M/ O/C	Description
device	DeviceID	M	Specifies the device on which to set the feature.
doNotDisturbOn	Boolean	M	Specifies whether the do not disturb feature is enabled. The complete set of possible values is: • FALSE- Do not disturb feature is not enabled. • TRUE- Do not disturb feature is enabled.
callOrigination	Bitmap	O	Specifies a bitmap where each bit represents a different type of call origination on which the do not disturb feature is to be honoured. The following is the list of bits (multiple bits may be set): • Internal - Calls originating from within the switching sub-domain. • External - Calls originating from outside the switching sub-domain. If this parameter is not supported, the type of call origination on which do not disturb is honoured is switching function specific (as indicated in the capability exchange services). If this parameter is supported, but not provided by the computing function, then the default value for the bitmap is all bits on (all types of call origination are honoured).
callingDeviceList	List of DeviceIDs	O	Specifies the calling device(s) from which the do not disturb feature is to be honoured (i.e., calls originating from this device will not be delivered). If this parameter is supported but not provided, then the do not disturb feature shall be processed without regard to the calling device.
security	CSTASecurityData	O	Specifies timestamp information, message sequence number, and security information.
privateData	CSTAPrivateData	O	Specifies non-standardized information.

22.1.18.1.1 Service Response

The capability exchange services describe the type of acknowledgement model (atomic or multi-step) that the switching function supports for this service request.

22.1.18.1.2 Positive Acknowledgement

Table 22-49 Set Do Not Disturb—Positive Acknowledgement

Parameter Name	Type	M/ O/C	Description
security	CSTASecurityData	O	Specifies timestamp information, message sequence number, and security information.
privateData	CSTAPrivateData	O	Specifies non-standardized information.

© ISO/IEC 2007 – All rights reserved

22.1.18.1.3 Negative Acknowledgement

The negative acknowledgement error codes are described in 12.2.14, “ErrorValue”, on page 115.

22.1.18.2 Operational Model

22.1.18.2.1 Connection State Transitions

Existing connected and held calls are not affected. Calls that are alerting or queued when this feature is turned on may be affected in that the newly-activated feature may be applied to them by the switching function.

22.1.18.2.2 Device-Type Monitoring Event Sequences

Table 22-50 Set Do Not Disturb—Device-Type Monitoring Event Sequences

Monitored Device	Event
D1 (device)	Do Not Disturb

22.1.18.2.3 Call-Type Monitoring Event Sequences

If the monitor object is a device, if supported, the monitoring event sequence is the same as the Device-Type Monitoring event sequence.

22.1.18.2.4 Functional Requirements

1. If a device is called that has do not disturb activated, depending upon the Forwarding type activated at the device, the call may be forwarded to an alternate destination.

22.1.19 Set Forwarding C → S

The Set Forwarding service allows the computing function to control the forwarding feature at a specified device based on user defined conditions. The forwarding feature is used to redirect calls that arrive at a specified device to an alternate destination.

This service allows only one user-specified setting (forwarding type/forward-destination combination) to be changed per service invocation.

22.1.19.1 Service Request

Table 22-51 Set Forwarding—Service Request

Parameter Name	Type	M/ O/C	Description
device	DeviceID	M	Specifies the device on which to set the feature.

© ISO/IEC 2007 – All rights reserved

Copyright International Organization for Standardization
Provided by IHS under license with ISO
No reproduction or networking permitted without license from IHS
Not for Resale

Table 22-51 Set Forwarding—Service Request (continued)

Parameter Name	Type	M/ O/C	Description
forwardingType	Enumerated	C	Specifies the type of forwarding. The “internal” and “external” types refer to the type of call origination (for example an external call) that will be forwarded if it matches a forwarding type (for example, forwardImmExt) enabled at the device. The complete set of possible values is: • forwardImmediate • forwardBusy • forwardDND • forwardNoAns • forwardBusyInt • forwardBusyExt • forwardDNDInt • forwardDNDExt • forwardNoAnsInt • forwardNoAnsExt • forwardImmInt • forwardImmExt This parameter shall be provided for user specified forwarding settings and shall not be provided for switching function default settings. See Functional Requirement #1.
activateForward	Boolean	M	Indicates the status of the forwarding type. The complete set of possible values is: • FALSE - Deactivate forwarding. • TRUE - Activate forwarding.
forwardDN	DeviceID	C	Specifies the device to which new calls are forwarded. This parameter shall be provided for user specified forwarding settings when activateForward is TRUE (it is optional when FALSE). It shall not be provided for switching function default settings. See Functional Requirement #1.
ringCount	Value (1...100)	O	Specifies the number of times a device should ring prior to forwarding no answer. See Functional Requirement #C.
ringDuration	Value	O	Specifies the time (in seconds) that the device should ring prior to forwarding no answer. ringDuration should not be provided if ringCount is provided. See Functional Requirement #C.
security	CSTASecurityData	O	Specifies timestamp information, message sequence number, and security information.
privateData	CSTAPrivateData	O	Specifies non-standardized information.

22.1.19.2 Service Response

The capability exchange services describe the type of acknowledgement model (atomic or multi-step) that the switching function supports for this service request.

© ISO/IEC 2007 – All rights reserved

Copyright International Organization for Standardization
Provided by IHS under license with ISO
No reproduction or networking permitted without license from IHS
Not for Resale

22.1.19.2.1 Positive Acknowledgement

Table 22-52 Set Forwarding—Positive Acknowledgement

Parameter Name	Type	M/ O/C	Description
security	CSTASecurityData	O	Specifies timestamp information, message sequence number, and security information.
privateData	CSTAPrivateData	O	Specifies non-standardized information.

22.1.19.2.2 Negative Acknowledgement

The negative acknowledgement error codes are described in 12.2.14, “ErrorValue”, on page 115.

22.1.19.3 Operation Model

22.1.19.3.1 Functional Requirements

1. To activate or deactivate user specified settings, the computing function shall specify the forwardingType. To activate or deactivate switching function default settings, the computing function shall not specify the forwardingType. The computing function should use the capabilities exchange services to determine which level(s) of forwarding settings are supported by the switching function.
2. If ringCount or ringDuratation is specified, the activateForward shall be TRUE and the forwardingType or default value shall be one of the following values:
   - forwardingType (forwardNoAns)
   - forwardingType (forwardNoAnsInt)
   - forwardingType (forwardNoAnsExt)
3. If multiple user-specified settings need to be set and if activation of multiple settings is supported by the switching function (as indicated through the capabilities exchange services), multiple Set Forwarding service requests can be used to activate multiple settings for the same device.

22.1.20 Set Routeing Mode C ⟶ S

The Set Routeing Mode service allows the computing function to control the routeing mode at a specified device.

The routeing mode indicates if a device is able to make routeing requests to the computing function.

For example, if the routeing mode is set, a device may request routeing instructions (see 20.2.4, “Route Request”, on page 408) from the computing function when a call arrives at the device.

22.1.20.1 Service Request

Table 22-53 Set Routeing Mode—Service Request

Parameter Name	Type	M/ O/C	Description
device	DeviceID	M	Specifies the device on which to set the feature.

--`,,```,,,,````-`-`,,`,,`,`,,`---
© ISO/IEC 2007 – All rights reserved
Copyright International Organization for Standardization
Provided by IHS under license with ISO
No reproduction or networking permitted without license from IHS
Not for Resale

Table 22-53 Set Routeing Mode—Service Request (continued)

Parameter Name	Type	M/ O/C	Description
routeingMode	Boolean	M	Specifies the routeing mode of the device. The complete set of possible values is: • TRUE - the device will request routeing instructions from the computing function when a call arrives at the device. • FALSE - the device will not request routeing instructions.
security	CSTASecurityData	O	Specifies timestamp information, message sequence number, and security information.
privateData	CSTAPrivateData	O	Specifies non-standardized information.

22.1.20.2 Service Response

The capability exchange services describe the type of acknowledgement model (atomic or multi-step) that the switching function supports for this service request.

22.1.20.2.1 Positive Acknowledgement

Table 22-54 Set Routeing Mode—Positive Acknowledgement

Parameter Name	Type	M/ O/C	Description
security	CSTASecurityData	O	Specifies timestamp information, message sequence number, and security information.
privateData	CSTAPrivateData	O	Specifies non-standardized information.

22.1.20.2.2 Negative Acknowledgement

The negative acknowledgement error codes are described in 12.2.14, “ErrorValue”, on page 115.

22.1.20.3 Operational Model

22.1.20.3.1 Connection State Transitions

There are no connection state transitions due to this service.

22.1.20.3.2 Device-Type Monitoring Event Sequences

Table 22-55 Set Routeing Mode—Device-Type Monitoring Event Sequences

Monitored Device	Event
D1 (device)	Routeing Mode

22.1.20.3.3 Call-Type Monitoring Event Sequences

If the monitor object is a device, if supported, the monitoring event sequence is the same as the Device-Type Monitoring event sequence.

© ISO/IEC 2007 – All rights reserved

Copyright International Organization for Standardization
Provided by IHS under license with ISO
No reproduction or networking permitted without license from IHS
Not for Resale

22.1.20.3.4 Functional Requirements

1. Some switching functions may change the routeing mode of a device without using this service. This may occur based upon configuration information in the switching function or for other reasons.

22.2 Events

Table 22-56 Logical Device Feature Event Summary

Logical Device Feature Event	Description	Pg.
22.2. Agent Busy	An agent is occupied with serving an ACD call.	494
22.2.2 Agent Logged Off	An agent has logged off of an ACD group or an ACD device.	495
22.2.3 Agent Logged On	An agent has logged on to an ACD group or an ACD device.	496
22.2.4 Agent Not Ready	An agent is unavailable and cannot receive incoming ACD calls.	497
22.2.5 Agent Ready	An agent is available for an ACD call.	498
22.2.6 Agent Working After Call	An agent is involved with after call work and cannot receive ACD calls.	499
22.2.7 Auto Answer	The auto-answer status has changed.	500
22.2.8 Auto Work Mode	The auto-work mode status has changed.	501
22.2.9 Call Back	The call back feature status has changed.	502
22.2.10 Call Back Message	The call back message status has changed.	502
22.2.11 Caller ID Status	The Caller ID status has been changed for a device.	503
22.2.12 Do Not Disturb	The do not disturb status has changed.	503
22.2.13 Forwarding	The forwarding status has changed.	504
22.2.14 Routeing Mode	The routeing mode status has changed.	506

22.2. Agent Busy

The Agent Busy event indicates that an agent has entered the Busy state. In this state an agent is involved with an existing ACD call at a device, even if that call is on hold at the device. It also implies that the agent may be able to accept non-ACD calls. Calls between agents, calls between supervisors and agents and private calls may or may not cause this transition.

An example of when this event is generated is when an agent is connected to an ACD call.

22.2.1.1 Event Parameters

Table 22-57 Agent Busy—Event Parameters (Sheet 1 of 2)

Parameter Name	Type	M/ O/C	Description
monitorCrossRefID	MonitorCrossRefID	M	Associates the event to an established monitor.
agentDevice	SubjectDeviceID	M	Indicates the device at which the agent entered the Agent Busy state.
agentID	AgentID	C	Indicates the agent identifier. This parameter shall be provided if there are multiple agentIDs associated with the agent device.

© ISO/IEC 2007 – All rights reserved

Copyright International Organization for Standardization
Provided by IHS under license with ISO
No reproduction or networking permitted without license from IHS
Not for Resale

Table 22-57 Agent Busy—Event Parameters (Sheet 2 of 2)

Parameter Name	Type	M/ O/C	Description
acdGroup	DeviceID	C	Indicates the acd group. This parameter shall be provided if the event is associated with an ACD group activity otherwise it shall not be provided. See 6.1.1.6.5, “Agent State Models”, on page 41.
pendingAgentState	Enumerated	C	Indicates the agent state that the agent will transition to after the agent state is no longer Busy. The complete set of possible values is: • Working After Call • Not Ready • Ready • Null This parameter shall be provided if the switching function is delaying the transition to the pendingAgentState until the agent is no longer Busy, otherwise the parameter is optional.
cause	EventCause	O	Indicates a reason for the event.
security	CSTASecurityData	O	Specifies timestamp information, message sequence number, and security information.
privateData	CSTAPrivateData	O	Specifies non-standardized information.

22.2.1.2 Event Causes

Table 22-58 Agent Busy—Event Causes

Event Cause	Description	Associated Features
Normal	An agent is connected to an ACD call.	Any feature

22.2.1.3 Functional Requirements

1. This event can be reported in conjunction with either a monitor on the ACD device, ACD group or the device associated with the agent. For more details on ACD and the agent, see 6.1.1.6, “Agent”, on page 38 and 6.1.1.4.3, “ACD Device Category”, on page 26.
2. Call Control events provide information on involvement with both ACD and non-ACD calls.

22.2.2 Agent Logged Off

The Agent Logged Off event indicates that an agent has logged off an ACD device or an ACD group.

Typical examples of when this event may be generated are:

- An agent logs off using the telephone.
- An agent is logged off via the Set Agent State service.
- A supervisor logs off an agent on behalf of the agent.
- A logged on device leaves a switching sub-domain or becomes an invalid device in a switching sub-domain (is deconfigured, for example).

© ISO/IEC 2007 – All rights reserved

Copyright International Organization for Standardization
Provided by IHS under license with ISO
No reproduction or networking permitted without license from IHS
Not for Resale

22.2.2.1 Event Parameters

Table 22-59 Agent Logged Off—Event Parameters

Parameter Name	Type	M/ O/C	Description
monitorCrossRefID	MonitorCrossRefID	M	Associates the event to an established monitor.
agentDevice	SubjectDeviceID	M	Indicates the device where the agent logged off.
agentID	AgentID	C	Indicates the agent identifier. This parameter shall be provided if there are multiple agentIDs associated with the agent device.
acdGroup	DeviceID	C	Indicates the ACD group from which the agent logged off. This parameter shall be provided if the agent is logging off of an ACD group. See 6.1.1.6, “Agent”, on page 38.
agentPassword	AgentPassword	O	Indicates the agent password. Note that the switching function may omit this information for security reasons, etc.
cause	EventCause	O	Indicates a reason for the event.
security	CSTASecurityData	O	Specifies timestamp information, message sequence number, and security information.
privateData	CSTAPrivateData	O	Specifies non-standardized information.

22.2.2.2 Event Causes

Table 22-60 Agent Logged Off—Event Causes

Event Cause	Description	Associated Features
Normal	An agent has logged off an ACD group or ACD device.	Any feature

22.2.3 Agent Logged On

The Agent Logged On event indicates that an agent is logged-on at a particular device to an ACD device or ACD group and is ready to contribute to the activities of the ACD device or ACD group. It does not indicate that the agent is ready to accept ACD calls.

Typical examples of when this event may be generated are:

- The agent logged on using the telephone.
- The agent logged on using the Set Agent State service.
- During system start-up, if the agent is configured for logging on automatically.

22.2.3.1 Event Parameters

Table 22-61 Agent Logged On—Event Parameters (Sheet 1 of 2)

Parameter Name	Type	M/ O/C	Description
monitorCrossRefID	MonitorCrossRefID	M	Associates the event to an established monitor.
agentDevice	SubjectDeviceID	M	Indicates the device where the agent logged on.
agentID	AgentID	C	Indicates the agent identifier. This parameter shall be provided if there are multiple agentIDs associated with the agent device.

© ISO/IEC 2007 – All rights reserved
--`,,```,,,,````-`-`,,`,,`,`,,`---
Copyright International Organization for Standardization
Provided by IHS under license with ISO
No reproduction or networking permitted without license from IHS
Not for Resale

Table 22-61 Agent Logged On—Event Parameters (Sheet 2 of 2)

Parameter Name	Type	M/ O/C	Description
acdGroup	DeviceID	C	Indicates the ACD group to which the agent logged on. This parameter shall be provided if the agent is logging on to an ACD group. See 6.1.1.6, “Agent”, on page 38.
agentPassword	AgentPassword	O	Indicates the agent password that was used for logging on. Note that the switching function may omit this information for security reasons, etc.
cause	EventCause	O	Indicates a reason for the event.
security	CSTASecurityData	O	Specifies timestamp information, message sequence number, and security information.
privateData	CSTAPrivateData	O	Specifies non-standardized information.

22.2.3.2 Event Causes

Table 22-62 Agent Logged On—Event Causes

Event Cause	Description	Associated Features
Normal	An agent has logged on to an ACD group or ACD device.	Any feature

22.2.3.3 Functional Requirements

1. This event can be reported in conjunction with either a monitor on the ACD group or the device where the agent is logging on (i.e. agent device). For more details on ACD and the agent, see 6.1.1.6, “Agent”, on page 38 and 6.1.1.4.3, “ACD Device Category”, on page 26.
2. Call Control events provide information on involvement with both ACD and non-ACD calls.

22.2.4 Agent Not Ready

The Agent Not Ready event indicates that an agent has entered the Agent Not Ready state. In this state an agent is logged-on at a particular device to an ACD device or ACD group but is not prepared to handle calls that the ACD distributes. While in this state an agent may receive calls that are not ACD calls.

Typical examples of when this event may be generated are:

- An agent logs on using the telephone and is placed into the Not Ready agent state.
- An agent invokes the Agent Not Ready feature on the telephone.
- The agent invoked Agent Not Ready by using the Set Agent State service.
- A supervisor invokes the Agent Not Ready feature on behalf of the agent.

22.2.4.1 Event Parameters

Table 22-63 Agent Not Ready—Event Parameters (Sheet 1 of 2)

Parameter Name	Type	M/ O/C	Description
monitorCrossRefID	MonitorCrossRefID	M	Associates the event to an established monitor.
agentDevice	SubjectDeviceID	M	Indicates the device at which the agent entered the Agent Not Ready state.

--`,,```,,,,````-`-`,,`,,`,`,,`---

© ISO/IEC 2007 – All rights reserved

Copyright International Organization for Standardization
Provided by IHS under license with ISO
No reproduction or networking permitted without license from IHS
Not for Resale

Table 22-63 Agent Not Ready—Event Parameters (Sheet 2 of 2)

Parameter Name	Type	M/ O/C	Description
agentID	AgentID	C	Indicates the agent identifier. This parameter shall be provided if there are multiple agentIDs associated with the agent device.
acdGroup	DeviceID	C	Indicates the ACD group from which the agent logged on. This parameter shall be provided if the event is associated with an ACD group activity otherwise it shall not be provided. See 6.1.1.6.5, “Agent State Models”, on page 41.
cause	EventCause	O	Indicates a reason for the event.
security	CSTASecurityData	O	Specifies timestamp information, message sequence number, and security information.
privateData	CSTAPrivateData	O	Specifies non-standardized information.

22.2.4.2 Event Causes

Table 22-64 Agent Not Ready—Event Causes

Event Cause	Description	Associated Features
Auto Work	The event is due to the auto-work feature.	Auto-work
Normal	An agent cannot receive incoming ACD calls but is still logged on to an ACD group or ACD device (a more specific cause cannot be provided).	Any feature
Forced Pause	The agent entered a periodic non-working condition. This usually occurs because of regulations that requires agents to have a certain amount of time between handling successive ACD calls.	ACD call
Forced Transition	The agent state is Not Ready due to activity in another ACD device or an ACD group.	ACD call

22.2.4.3 Functional Requirements

1. This event can be reported in conjunction with either a monitor on the ACD device, ACD group, or the device associated with the agent. For more details on ACD and the agent, see 6.1.1.6, “Agent”, on page 38 and 6.1.1.4.3, “ACD Device Category”, on page 26.
2. Call Control events provide information on involvement with both ACD and non-ACD calls.

22.2.5 Agent Ready

The Agent Ready event indicates that an agent has entered the Ready state. In this state, an agent is logged-on at a particular device to an ACD device or ACD group and is prepared to handle ACD calls even though it may be involved with non-ACD calls.

Typical examples of when this event may be generated are:

- An agent auto-work timer expires. (This is a configuration option.)
- An agent invokes the Agent Ready feature on the telephone.
- The agent invoked Agent Ready by using the Set Agent State service.
- A supervisor invokes the Agent Ready feature on behalf of the agent.

© ISO/IEC 2007 – All rights reserved

Copyright International Organization for Standardization
Provided by IHS under license with ISO
No reproduction or networking permitted without license from IHS
Not for Resale

22.2.5.1 Event Parameters

Table 22-65 Agent Ready—Event Parameters

Parameter Name	Type	M/ O/C	Description
monitorCrossRefID	MonitorCrossRefID	M	Associates the event to an established monitor.
agentDevice	SubjectDeviceID	M	Indicates the device at which the agent entered the Agent Ready state.
agentID	AgentID	C	Indicates the agent identifier. This parameter shall be provided if there are multiple agentIDs associated with the agent device.
acdGroup	DeviceID	C	Indicates the ACD group from which the agent logged on. This parameter shall be provided if the event is associated with an ACD group activity otherwise it shall not be provided. See 6.1.1.6.5, “Agent State Models”, on page 41.
cause	EventCause	O	Indicates a reason for the event.
security	CSTASecurityData	O	Specifies timestamp information, message sequence number, and security information.
privateData	CSTAPrivateData	O	Specifies non-standardized information.

22.2.5.2 Event Causes

Table 22-66 Agent Ready—Event Causes

Event Cause	Description	Associated Features
Auto Work	The event is due to the auto-work feature.	Auto-work
Normal	An agent may receive ACD calls.	Any feature

22.2.5.3 Functional Requirements

1. This event can be reported in conjunction with either a monitor on the ACD device, ACD group or the device associated with the agent. For more details on ACD and the agent, see 6.1.1.6, “Agent”, on page 38 and 6.1.1.4.3, “ACD Device Category”, on page 26.
2. Call Control events provide information on involvement with both ACD and non-ACD calls.

22.2.6 Agent Working After Call

The Agent Working After Call event indicates that an agent has entered the Working After Call state. In this state an agent is no longer connected to an ACD call but is still occupied with work related to a previous ACD call. In this state, an agent cannot receive ACD calls but may be able to receive non-ACD calls. The agent may be performing administrative duties (e.g., updating a business order form) for a previous call, or may be involved with a non-ACD call.

Typical examples of when this event may be generated are:

- An agent completes an ACD call and goes into the workingAfterCall state. (This is a configuration option.)
- An agent invokes the Working After Call feature on the telephone.
- An agent invoked workingAfterCall state by using the Set Agent State service.

© ISO/IEC 2007 – All rights reserved

Copyright International Organization for Standardization
Provided by IHS under license with ISO
No reproduction or networking permitted without license from IHS
Not for Resale

22.2.6.1 Event Parameters

Table 22-67 Agent Working After Call—Event Parameters

Parameter Name	Type	M/ O/C	Description
monitorCrossRefID	MonitorCrossRefID	M	Associates the event to an established monitor.
agentDevice	SubjectDeviceID	M	Indicates the device at which the agent entered the workingAfterCall state.
agentID	AgentID	C	Indicates the agent identifier. This parameter shall be provided if there are multiple agentIDs associated with the agent device.
acdGroup	DeviceID	C	Indicates the ACD group from which the agent logged on. This parameter shall be provided if the event is associated with an ACD group activity otherwise it shall not be provided. See 6.1.1.6.5, “Agent State Models”, on page 41.
pendingAgentState	Enumerated	C	Indicates the agent state that the agent will transition to after the agent state is no longer WorkingAfterCall. The complete set of possible values is: • Not Ready • Ready • Null This parameter shall be provided if the switching function is delaying the transition to the pendingAgentState until the agent is no longer AfterCallWork, otherwise the parameter is optional.
cause	EventCause	O	Indicates a reason for the event.
security	CSTASecurityData	O	Specifies timestamp information, message sequence number, and security information.
privateData	CSTAPrivateData	O	Specifies non-standardized information.

22.2.6.2 Event Causes

Table 22-68 Agent Working After Call—Event Causes

Event Cause	Description	Associated Features
Auto Work	The event is due to the auto-work feature.	Auto-work
Normal	An agent is no longer connected to the ACD call but is still occupied with work related to the call.	Any feature

22.2.6.3 Functional Requirements

1. This event can be reported in conjunction with either a monitor on the ACD device, ACD group or the device associated with the agent. For more details on ACD and the agent, see 6.1.1.6, “Agent”, on page 38 and 6.1.1.4.3, “ACD Device Category”, on page 26.
2. Call Control events provide information on involvement with both ACD and non-ACD calls.

22.2.7 Auto Answer

The Auto Answer event indicates that the auto answer status has changed (On/Off) for a device.

Typical examples of when this event may be generated are:

© ISO/IEC 2007 – All rights reserved

Copyright International Organization for Standardization
Provided by IHS under license with ISO
No reproduction or networking permitted without license from IHS
Not for Resale

- The auto-answer feature has been changed on the telephone.
- The computing function, on behalf of a user, has invoked the Set Auto Answer service.

22.2.7.1 Event Parameters

Table 22-69 Auto Answer—Event Parameters

Parameter Name	Type	M/ O/C	Description
monitorCrossRefID	MonitorCrossRefID	M	Associates the event to an established monitor.
invokingDevice	SubjectDeviceID	M	Indicates the device where the auto answer status has changed.
autoAnswerOn	Boolean	M	Indicates the status of the feature. Shall be one of the following: • FALSE - Auto-answer feature is not enabled. • TRUE - Auto-answer feature is enabled (on).
numberOfRings	Value	O	Indicates the number of rings before a call is auto answered.
security	CSTASecurityData	O	Specifies timestamp information, message sequence number, and security information.
privateData	CSTAPrivateData	O	Specifies non-standardized information.

22.2.8 Auto Work Mode

The Auto Work Mode event indicates that the auto work mode feature has changed for a specific device.

The auto-work feature is used to automatically transition an agent state to the WorkingAfterCall state (from the Busy state) after an agent is finished with a call. The feature may also automatically transition the agent state from WorkingAfterCall (to Ready, for example) after a certain amount of time.

Typical examples of when this event may be generated are:

- The auto-work mode feature has been changed on the telephone.
- The computing function, on behalf of a user, has invoked the Set Auto Work Mode service.

22.2.8.1 Event Parameters

Table 22-70 Auto Work Mode—Event Parameters (Sheet 1 of 2)

Parameter Name	Type	M/ O/C	Description
monitorCrossRefID	MonitorCrossRefID	M	Associates the event to an established monitor.
invokingDevice	SubjectDeviceID	M	Indicates the device where the auto work mode status has changed.
autoWorkOn	Boolean	M	Indicates the status of the feature. It shall be one of the following: • FALSE - Auto-work mode off. • TRUE - Auto-work mode on.

© ISO/IEC 2007 – All rights reserved

Copyright International Organization for Standardization
Provided by IHS under license with ISO
No reproduction or networking permitted without license from IHS
Not for Resale

Table 22-70 Auto Work Mode—Event Parameters (Sheet 2 of 2)

Parameter Name	Type	M/ O/C	Description
autoWorkInterval	Value	M	Indicates the number of seconds that the agent state remains in the AfterCallWork state. The value of zero indicates that the auto work mode feature does not automatically cause the transition of the agent state from WorkingAfterCall (i.e., the transition must be done manually or via the Set Agent State service).
security	CSTASecurityData	O	Specifies timestamp information, message sequence number, and security information.
privateData	CSTAPrivateData	O	Specifies non-standardized information.

22.2.9 Call Back

The Call Back event indicates that a call back feature has been set or cancelled between two devices.

Typical examples of when this event may be generated are:

- A call back was set or a pending call back was cancelled manually from a phone.
- The computing function, on behalf of a user, set or cancelled a call back.

22.2.9.1 Event Parameters

Table 22-71 Call Back—Event Parameters

Parameter Name	Type	M/ O/C	Description
monitorCrossRefID	MonitorCrossRefID	M	Associates the event to an established monitor.
originatingDevice	SubjectDeviceID	M	Indicates the DeviceID of the originating device when the call back relationship was established.
targetDevice	SubjectDeviceID	M	Indicates the DeviceID of the target device when the call back relationship was established.
callBackSetCancelled	Boolean	M	Indicates whether a call back was set or cancelled. Shall be one of the following: • FALSE - Call Back was cancelled. • TRUE - Call Back was set.
security	CSTASecurityData	O	Specifies timestamp information, message sequence number, and security information.
privateData	CSTAPrivateData	O	Specifies non-standardized information.

22.2.10 Call Back Message

The Call Back Message event indicates that a call back message feature has been set or cancelled between two devices.

Typical examples of when this event may be generated are:

- A call back message was set or a pending call back message was cancelled manually from a phone.
- The computing function, on behalf of a user, set or cancelled a call back message.

© ISO/IEC 2007 – All rights reserved

Copyright International Organization for Standardization
Provided by IHS under license with ISO
No reproduction or networking permitted without license from IHS
Not for Resale

22.2.10.1 Event Parameters

Table 22-72 Call Back Message—Event Parameters

Parameter Name	Type	M/ O/C	Description
monitorCrossRefID	MonitorCrossRefID	M	Associates the event to an established monitor.
originatingDevice	SubjectDeviceID	M	Indicates the DeviceID of the “return-call-to” device when the call back message relationship was established).
targetDevice	SubjectDeviceID	M	Indicates the DeviceID of the target device at which the call back message was lodged.
callBackMsgSetCancelled	Boolean	M	Indicates whether a call back message was set or cancelled. Shall be one of the following: • FALSE - Call Back Message was cancelled. • TRUE - Call Back message was set.
security	CSTASecurityData	O	Specifies timestamp information, message sequence number, and security information.
privateData	CSTAPrivateData	O	Specifies non-standardized information.

22.2.11 Caller ID Status

The CallerID Status event indicates that the caller ID status has been changed for a device.

Typical examples of when this event may be generated are:

- The Caller ID status change has been invoked on the telephone.
- The computing function, on behalf of a user, has invoked the Set Caller ID Status service.

22.2.11.1 Event Parameters

Table 22-73 Caller ID Status—Event Parameters

Parameter Name	Type	M/ O/C	Description
device	DeviceID	M	Specifies the device on which to set the feature.
callerIDProvided	Boolean	M	Specifies the value of the requested feature. The complete set of possible values is: • FALSE - Caller ID is not to be provided on calls originating from this device. • TRUE - Caller ID is to be provided on calls originating from this device.
security	CSTASecurityData	O	Specifies timestamp information, message sequence number, and security information.
privateData	CSTAPrivateData	O	Specifies non-standardized information.

22.2.12 Do Not Disturb

The Do Not Disturb event indicates that the do not disturb feature has been changed for a device.

Typical examples of when this event may be generated are:

- The do not disturb feature has been changed on the telephone.
- The computing function, on behalf of a user, has invoked the Set Do Not Disturb service.

© ISO/IEC 2007 – All rights reserved

Copyright International Organization for Standardization
Provided by IHS under license with ISO
No reproduction or networking permitted without license from IHS
Not for Resale

22.2.12.1 Event Parameters

Table 22-74 Do Not Disturb—Event Parameters

Parameter Name	Type	M/ O/C	Description
monitorCrossRefID	MonitorCrossRefID	M	Associates the event to an established monitor.
device	SubjectDeviceID	M	Indicates the device where the do not disturb feature was changed.
doNotDisturbOn	Boolean	M	Indicates the status of the feature. The complete set of possible values is: • FALSE - Do not disturb feature is not enabled. • TRUE - Do not disturb feature is enabled.
callOrigination	Bitmap	O	Specifies a bitmap where each bit represents a different type of call origination on which the do not disturb feature is to be honoured. The following is the list of bits (multiple bits may be set): • Internal - Calls originating from within the switching sub-domain. • External - Calls origination from outside the switching sub-domain. If this parameter is not supported, the type of call origination on which do not disturb is honoured is switching function specific.
callingDeviceList	List of DeviceIDs	O	Specifies the calling device(s) from which the do not disturb feature is to be honoured (i.e., calls originating from this device will not be delivered). If this parameter is supported but not provided, then the do not disturb feature is being processed without regard to the calling device.
security	CSTASecurityData	O	Specifies timestamp information, message sequence number, and security information.
privateData	CSTAPrivateData	O	Specifies non-standardized information.

22.2.13 Forwarding

The Forwarding event indicates that the forwarding feature has been changed for a device.

Typical examples of when this event may be generated are:

- The forwarding feature has been changed on the telephone.
- The computing function, on behalf of a user, has invoked the Set Forwarding service.

22.2.13.1 Event Parameters

Table 22-75 Forwarding—Event Parameters

Parameter Name	Type	M/ O/C	Description
monitorCrossRefID	MonitorCrossRefID	M	Associates the event to an established monitor.
device	SubjectDeviceID	M	Indicates the device where the forwarding feature was changed.

© ISO/IEC 2007 – All rights reserved

Copyright International Organization for Standardization
Provided by IHS under license with ISO
No reproduction or networking permitted without license from IHS
Not for Resale

Table 22-75 Forwarding—Event Parameters (continued)

Parameter Name	Type	M/ O/C	Description
forwardingType	Enumerated	O	Indicates the type of forwarding. It shall be provided for user specified settings and it is optional for switching function default settings (see Functional Requirement #3). The “internal” and “external” types refer to the type of call origination (for example an external call) that will be forwarded if it matches a forwarding type (for example forwardImmExt) enabled at the device. The complete set of possible values is: • forwardImmediate • forwardBusy • forwardNoAns • forwardDND • forwardBusyInt • forwardBusyExt • forwardNoAnsInt • forwardNoAnsExt • forwardImmInt • forwardImmExt • forwardDNDInt • forwardDNDExt
forwardStatus	Boolean	M	Indicates the status of the forwarding type. The complete set of possible values is: • FALSE - the forwarding type is deactivated. • TRUE - the forwarding type is active.
forwardTo	DeviceID	O	Specifies the destination to which calls are forwarded. It shall be provided for user specified settings and it is optional for switching function default settings (see Functional Requirement #3).
forwardDefault	Enumerated	O	Specifies that provided forwardingType and/or the forwardDN is a default setting. If the forwardDefault parameter is supported by the switching function and it is not present, the forwarding information is not a default setting. The complete set of possible values is: • defaultForwardingTypeAndForwardDN • defaultForwardingType • defaultForwardDN. See Functional Requirement #4.
ringCount	Value (1...100)	O	Specifies the number of times a device should ring prior to forwarding no answer. See Functional Requirement #5.
ringDuration	Value	O	Specifies the time (in seconds) that a device rings prior to forwarding no answer. ringDuration should not be provided if ringCount is provided. See Functional Requirement #5.
security	CSTASecurityData	O	Specifies timestamp information, message sequence number, and security information.
privateData	CSTAPrivateData	O	Specifies non-standardized information.

© ISO/IEC 2007 – All rights reserved

Copyright International Organization for Standardization
Provided by IHS under license with ISO
No reproduction or networking permitted without license from IHS
Not for Resale

22.2.13.2 Functional Requirements

1. Only a single forwardingType parameter is provided per Forwarding event. If multiple forwarding types are changed for the same device, the switching function provides multiple Forwarding events.
2. This event is only generated when forwarding status is changed, not when forwarding occurs.
3. There are two possible levels of forwarding settings (see 6.7.1, “Forwarding”, on page 69) that can be supported by a switching function. (refer to the capability exchange services for the levels supported by an implementation):
   - switching function default settings - a single set of forwarding type/forwarding destination combinations that can be activated/deactivated as a set.
   - user specified settings - individual forwarding type/forwarding destination combinations that can be activated/deactivated one at a time.
4. The forwardDefault parameter indicates if either the forwardingType or the forwardDN parameters is default information associated with the device (in the case where the forwarding settings have never been changed, for example) and what forwarding level the information is associated with. The possible values for forwardDefault are:
   - defaultForwardingTypeAndForwardDN - indicates that the information is associated with the switching function default settings.
   - defaultForwardingType - indicates that forwardingType is a default value associated with user specified settings.
   - defaultForwardDN - indicates that forwardDN is a default value associated with user specified settings.
5. ringCount or ringDuration, if supported, is only specified when one of the following forwarding types is provided:
   - forwardNoAns
   - forwardNoAnsInt
   - forwardNoAnsExt

22.2.14 Routeing Mode

The Routeing Mode event indicates that the routeing mode has been changed for a device.

Typical examples of when this event may be generated are:

- The computing function, on behalf of a user, has invoked the Set Routeing Mode service.
- The switching function has changed the routeing mode for a device.

22.2.14.1 Event Parameters

Table 22-76 Routeing Mode—Event Parameters

Parameter Name	Type	M/ O/C	Description
monitorCrossRefID	MonitorCrossRefID	M	Associates the event to an established monitor.
device	SubjectDeviceID	M	Indicates the device where the routeing mode was changed.

© ISO/IEC 2007 – All rights reserved
Copyright International Organization for Standardization
Provided by IHS under license with ISO
No reproduction or networking permitted without license from IHS
Not for Resale

Table 22-76 Routeing Mode—Event Parameters (continued)

Parameter Name	Type	M/ O/C	Description
routeingMode	Boolean	M	Indicates the routeing mode of the device. The complete set of possible values is: • TRUE - the device will request routeing instructions (when a call arrives at the device, for example). • FALSE - the device will not request routeing instructions.
security	CSTASecurityData	O	Specifies timestamp information, message sequence number, and security information.
privateData	CSTAPrivateData	O	Specifies non-standardized information.

22.2.14.2 Functional Requirements

1. This event is only generated when the routeing mode is changed, not when a call arrives at the device or when the Route Request service is issued.

23 Device Maintenance Events

23.1 Events

Table 23-1 Device Maintenance Events Summary

Device Maintenance Event	Description	Pg.
23.1.1 Back In Service	Indicates that the device has been returned to service.	507
23.1.2 Device Capabilities Changed	Indicates that the device level information has changed.	508
23.1.3 Out Of Service	Indicates that the device has entered a maintenance state (i.e., has been taken out of service).	508
23.1.4 Partially In Service	Indicates that the device has entered a partially in service maintenance state.	509

23.1.1 Back In Service

The Back In Service event indicates that the device has been returned to service and is operating normally.

23.1.1.1 Event Parameters

Table 23-2 Back In Service—Event Parameters

Parameter Name	Type	M/ O/C	Description
monitorCrossRefID	MonitorCrossRefID	M	Associates the event to an established monitor.
device	SubjectDeviceID	M	Indicates the device that is back in service.
cause	EventCause	O	Specifies a reason for the event.
security	CSTASecurityData	O	Specifies timestamp information, message sequence number, and security information.
privateData	CSTAPrivateData	O	Specifies non-standardized information.

--`,,```,,,,````-`-`,,`,,`,`,,`---

© ISO/IEC 2007 – All rights reserved

Copyright International Organization for Standardization
Provided by IHS under license with ISO
No reproduction or networking permitted without license from IHS
Not for Resale

23.1.1.2 Event Causes

Table 23-3 Back In Service—Event Causes

Event Cause	Description	Associated Features
Normal	The device is back in service.	Maintenance

23.1.1.3 Functional Requirements

1. If the Device Capabilities Changed Event is supported by the switching function (as indicated by the capability exchange services) then the Back In Service event does not imply that the capabilities of the out-of-service device have changed - only that the device is back in service.

23.1.2 Device Capabilities Changed

The Device Capabilities Changed event indicates that device level information that can be obtained with the capability exchange services (e.g. the Get Physical Device Information and/or Get Logical Device Information services) has changed.

The current device level capability information can be obtained by issuing a Get Physical Device Information and/or a Get Logical Device Information service.

23.1.2.1 Event Parameters

Table 23-4 Device Capabilities Changed—Event Parameters

Parameter Name	Type	M/ O/C	Description
monitorCrossRefID	MonitorCrossRefID	M	Associates the event to an established monitor.
device	SubjectDeviceID	M	Indicates the device whose information has changed.
cause	EventCause	O	Specifies a reason for the event.
security	CSTASecurityData	O	Specifies timestamp information, message sequence number, and security information.
privateData	CSTAPrivateData	O	Specifies non-standardized information.

23.1.2.2 Event Causes

Table 23-5 Device Capabilities Changed—Event Causes

Event Cause	Description	Associated Features
Normal	Device information has changed.	Maintenance, Capabilities Exchange

23.1.2.3 Functional Requirements

1. The Device Capabilities Changed event shall be generated whether or not the device level capability information has been previously obtained via the capability exchange services.

23.1.3 Out Of Service

The Out Of Service event indicates that the device has entered a maintenance state (i.e., has been taken out of service) and can no longer accept calls and some categories of CSTA service requests (Call Control services, for example).

© ISO/IEC 2007 – All rights reserved

Copyright International Organization for Standardization
Provided by IHS under license with ISO
No reproduction or networking permitted without license from IHS
Not for Resale

23.1.3.1 Event Parameters

Table 23-6 Out Of Service—Event Parameters

Parameter Name	Type	M/ O/C	Description
monitorCrossRefID	MonitorCrossRefID	M	Associates the event to an established monitor.
device	SubjectDeviceID	M	Indicates the device that has been taken out of service.
cause	EventCause	O	Specifies a reason for the event.
security	CSTASecurityData	O	Specifies timestamp information, message sequence number, and security information.
privateData	CSTAPrivateData	O	Specifies non-standardized information.

23.1.3.2 Event Causes

Table 23-7 Out Of Service—Event Causes

Event Cause	Description	Associated Features
Forced Transition	Another dependent resource has caused this device to go out of service.	Maintenance
Maintenance	The device has been taken out of service for maintenance.	Maintenance
Normal	The device has been taken out of service (a more specific cause is not available).	Maintenance

23.1.3.3 Functional Requirements

1. This event is generated when any logical and physical element associated with a particular device configuration becomes out of service. For devices with both logical and physical elements, separate Out Of Service events may be generated when the logical and physical elements become out of service.
2. When a device becomes out of service, existing monitors are not removed (e.g., existing MonitorCrossRefIDs remain valid). However:
   - It may not be possible (as specified in the capability exchange services) to start a new monitor on an out of service device. If a monitor cannot be started because the a device is out of service, the Monitor Start service will result in a negative acknowledgment (with an error code of Device Out Of Service).
   - Event flows over an existing monitors may be reduced (or even completely stopped except for the Back In Service event).
   - Snapshot services (such as Snapshot Device) may result in a negative acknowledgment (with an error code of Device Out Of Service) if attempted on an out of service device.
3. If the Device Capabilities Changed Event is supported by the switching function (as indicated by the capability exchange services) then the Out Of Service event does not imply that the capabilities of the out of service device have changed - only that the device is out of service.

23.1.4 Partially In Service

The Partially In Service event indicates that a device is “partially in service”. This means that part of the device can no longer be able to accept calls and some categories of CSTA service requests.

This might occur, for example, for a CSTA group device when one or more members of a group device are in In Service while one or more members of a group device are Out of Service.

© ISO/IEC 2007 – All rights reserved
--`,,```,,,,````-`-`,,`,,`,`,,`---

Copyright International Organization for Standardization
Provided by IHS under license with ISO
No reproduction or networking permitted without license from IHS
Not for Resale

23.1.4.1 Event Parameters

Table 23-8 Partially In Service - Event Parameters

Parameter Name	Type	M/ O/C	Description
monitorCrossRefID	MonitorCrossRefID	M	Associates the event to an established monitor.
device	SubjectDeviceID	M	Indicates the device that gone partially in service.
cause	EventCause	O	Specifies the reason for the event.
security	CSTASecurityData	O	Specifies timestamp information, message sequence number, and security information.
privateData	CSTAPrivateData	O	Specifies non-standardized information.

23.1.4.2 Event Causes

Table 23-9 Partially In Service - Event Causes

Event Cause	Description	Associated Feature
Forced Transition	Another resource has caused this device to go partially in service.	Maintenance.
Maintenance	Part of the device has been taken out of service for maintenance.	Maintenance.
Normal	The device is partially in service (a specific cause is not available).	Maintenance.

23.1.4.3 Functional Requirements

1. When a device becomes partially in service, existing monitors are not removed (e.g., existing MonitorCrossRefIDs remain valid). However:
   - Event flows over an existing monitor may be reduced (or even completely stopped except for the Back In Service event).
   - Some CSTA services may not be allowed for a partially in service device.
2. When a partially in service device becomes in service, a Back In Service event is generated.
3. When a partially in service device becomes out of service, an Out of Service event is generated.

24 I/O Services

This section includes:

- I/O Registration services
- I/O services

© ISO/IEC 2007 – All rights reserved

Copyright International Organization for Standardization
Provided by IHS under license with ISO
No reproduction or networking permitted without license from IHS
Not for Resale

24.1 Registration Services

Table 24-1 I/O Registration Services Summary

I/O Registration Service	Description	Pg.
24.1.1 I/O Register	Registers the computing function as an I/O server for a specified device or for the entire switching function.	511
24.1.2 I/O Register Abort	Specifies that the switching function has terminated an I/O server registration.	512
24.1.3 I/O Register Cancel	Unregisters the computing function as an I/O server.	513

24.1.1 I/O Register

C ⟶ S

The I/O Register service is used to register the computing function as an I/O server for a specific device or as an I/O server for all devices within the switching sub-domain. The computing function may be required to register for I/O services before it can receive I/O service requests for a device from the switching function. A computing function may register to be the I/O server for more than one I/O device.

Note that an I/O registration is not applicable when a data path is initiated by the computing function (i.e., a computing function can initiate a I/O data path after an I/O registration but the ioRegisterReqID parameter is not provided in the I/O services related to a data path that has been initiated by the computing function).

24.1.1.1 Service Request

Table 24-2 I/O Register—Service Request

Parameter Name	Type	M/ O/C	Description
ioDevice	DeviceID	C	Specifies the device for which the computing function requests to be the I/O server. This parameter is mandatory if the switching function does not support the option of registering for all devices in the switching sub-domain. Otherwise, the parameter is optional and if not present, indicates the registration is to be for all devices in the switching sub-domain.
security	CSTASecurityData	O	Specifies timestamp information, message sequence number, and security information.
privateData	CSTAPrivateData	O	Specifies non-standardized information.

24.1.1.2 Service Response

This service follows the atomic acknowledgement model for this service request.

24.1.1.2.1 Positive Acknowledgement

Table 24-3 I/O Register—Positive Acknowledgement

Parameter Name	Type	M/ O/C	Description
ioRegisterReqID	IORegisterReqID	M	Specifies the I/O registration request identifier for this registration.
security	CSTASecurityData	O	Specifies timestamp information, message sequence number, and security information.
privateData	CSTAPrivateData	O	Specifies non-standardized information.

© ISO/IEC 2007 – All rights reserved

Copyright International Organization for Standardization
Provided by IHS under license with ISO
No reproduction or networking permitted without license from IHS
Not for Resale

24.1.1.2.2 Negative Acknowledgement

The negative acknowledgement error codes are described in 12.2.14, “ErrorValue”, on page 115.

24.1.1.3 Operational Model

24.1.1.3.1 Connection State Transitions

There are no connection state changes due to this service.

24.1.1.3.2 Device-Type Monitoring Event Sequences

There are no events generated as a result of this service.

24.1.1.3.3 Call-Type Monitoring Event Sequences

There are no events generated as a result of this service.

24.1.1.3.4 Functional Requirements

1. The ioRegisterReqID parameter returned in the positive acknowledgement is used to identify the registration over which I/O service requests will be sent. The subsequent I/O services that are related to this request contain this parameter. The ioRegisterReqID is also used when cancelling the I/O registration.
2. If the ioDevice parameter on the service request is not provided and this option is supported, then the registration request is for all devices within the switching sub-domain. Some switching function implementations may not support the capability to register for all devices with a single I/O Register request (i.e., with the ioDevice parameter not provided), in which case the switching function will send a negative acknowledgement to the I/O Register request. The capabilities exchange services can be used by the computing function to determine if registering for all devices within the switching sub-domain is supported.
3. The number of simultaneous registrations allowed for the same device is switching function dependent. When the limit is reached, I/O register requests for the same device will result in negative acknowledgements from the switching function.

24.1.2 I/O Register Abort

S → C

This service is used by the switching function to asynchronously cancel an active I/O registration. This service invalidates a current I/O registration.

24.1.2.1 Service Request

Table 24-4 I/O Register Abort—Service Request

Parameter Name	Type	M/ O/C	Description
ioRegisterReqID	IORegisterReqID	M	Specifies the I/O registration request identifier for the I/O registration that was aborted.
security	CSTASecurityData	O	Specifies timestamp information, message sequence number, and security information.
privateData	CSTAPrivateData	O	Specifies non-standardized information.

© ISO/IEC 2007 – All rights reserved

Copyright International Organization for Standardization
Provided by IHS under license with ISO
No reproduction or networking permitted without license from IHS
Not for Resale

24.1.2.2 Service Response

There are no service completion conditions for this service.

24.1.2.2.1 Positive Acknowledgement

There is no positive acknowledgement associated with this service.

24.1.2.2.2 Negative Acknowledgement

The negative acknowledgement error codes are described in 12.2.14, “ErrorValue”, on page 115.

24.1.2.3 Operational Model

24.1.2.3.1 Connection State Transitions

There are no connection state changes due to this service.

24.1.2.3.2 Device-Type Monitoring Event Sequences

There are no events generated as a result of this service.

24.1.2.3.3 Call-Type Monitoring Event Sequences

There are no events generated as a result of this service.

24.1.2.3.4 Functional Requirements

1. The switching function may issue this service at any time when it can no longer maintain the I/O registration (e.g. when the associated device goes out of service).

24.1.3 I/O Register Cancel

C ⟶ S

The I/O Register Cancel service is used to cancel a previous I/O registration. This request terminates the I/O registration and the computing function receives no further I/O services requests for that I/O registration once it receives the positive acknowledgement to the I/O Register Cancel request.

24.1.3.1 Service Request

Table 24-5 I/O Register Cancel—Service Request

Parameter Name	Type	M/ O/C	Description
ioRegisterReqID	IORegisterReqID	M	Specifies the I/O registration to be cancelled.
security	CSTASecurityData	O	Specifies timestamp information, message sequence number, and security information.
privateData	CSTAPrivateData	O	Specifies non-standardized information.

24.1.3.2 Service Response

This service follows the atomic acknowledgement model for this service request.

© ISO/IEC 2007 – All rights reserved

Copyright International Organization for Standardization
Provided by IHS under license with ISO
No reproduction or networking permitted without license from IHS
Not for Resale

24.1.3.2.1 Positive Acknowledgement

Table 24-6 I/O Register Cancel—Positive Acknowledgement

Parameter Name	Type	M/ O/C	Description
security	CSTASecurityData	O	Specifies timestamp information, message sequence number, and security information.
privateData	CSTAPrivateData	O	Specifies non-standardized information.

24.1.3.2.2 Negative Acknowledgement

The negative acknowledgement error codes are described in 12.2.14, “ErrorValue”, on page 115.

24.1.3.3 Operational Model

24.1.3.3.1 Connection State Transitions

There are no connection state changes due to this service.

24.1.3.3.2 Device-Type Monitoring Event Sequences

There are no events generated as a result of this service.

24.1.3.3.3 Call-Type Monitoring Event Sequences

There are no events generated as a result of this service.

24.1.3.3.4 Functional Requirements

1. The computing function shall continue to process I/O requests from the device until it receives a positive acknowledgement for the I/O Register Cancel service request. The switching function shall not send any further I/O service requests for a registration once it has sent the positive acknowledgement.

24.2 I/O Services

Table 24-7 I/O Services Summary

I/O Service	Description	Pg.
24.2.1 Data Path Resumed	The Data Path Resumed service provides information that a previously suspended data path has been resumed.	515
24.2.2 Data Path Suspended	The Data Path Suspended service provides information that a data path has been suspended.	516
24.2.3 Fast Data	The Fast Data service starts a data path for only the duration of sending one data message.	517
24.2.4 Resume Data Path	The Resume Data Path requests the switching function to resume a currently suspended data path.	519
24.2.5 Send Broadcast Data	The Send Broadcast Data service writes to all open data paths for a given application association and data path type.	520
24.2.6 Send Data	The Send Data service writes data to a specified data path.	522
24.2.7 Send Multicast Data	The Send Multicast Data service writes to multiple data paths.	524
24.2.8 Start Data Path	The Start Data Path service starts a data path on the specified object.	526

© ISO/IEC 2007 – All rights reserved

Copyright International Organization for Standardization
Provided by IHS under license with ISO
No reproduction or networking permitted without license from IHS
Not for Resale

Table 24-7 I/O Services Summary (continued)

I/O Service	Description	Pg.
24.2.9 Stop Data Path	The Stop Data Path service terminates an existing data path.	528
24.2.10 Suspend Data Path	The Suspend Data Path suspends a specified data path but does not destroy the data path.	529

24.2.1 Data Path Resumed

S ⟶ C

The Data Path Resumed service provides information that a previously suspended data path has been resumed.

24.2.1.1 Service Request

Table 24-8 Data Path Resumed—Service Request

Parameter Name	Type	M/ O/C	Description
ioCrossRefID	IOCrossRefID	M	Specifies the cross reference identifier associated with the data path and whether the computing function or switching function started the data path.
ioRegisterReqID	IORegisterReqID	C	Specifies the I/O register request identifier associated with the registration for I/O services. This parameter is mandatory if the switching function supports I/O registration and the I/O Data Path was requested from the switching function, and shall not be provided otherwise.
security	CSTASecurityData	O	Specifies timestamp information, message sequence number, and security information.
privateData	CSTAPrivateData	O	Specifies non-standardized information.

24.2.1.2 Service Response

This service follows the atomic acknowledgement model for this service request.

24.2.1.2.1 Positive Acknowledgement

Table 24-9 Data Path Resumed—Positive Acknowledgement

Parameter Name	Type	M/ O/C	Description
security	CSTASecurityData	O	Specifies timestamp information, message sequence number, and security information.
privateData	CSTAPrivateData	O	Specifies non-standardized information.

24.2.1.2.2 Negative Acknowledgement

The negative acknowledgement error codes are described in 12.2.14, “ErrorValue”, on page 115.

24.2.1.3 Operational Model

24.2.1.3.1 Connection State Transitions

There are no connection state changes due to this service.

© ISO/IEC 2007 – All rights reserved

Copyright International Organization for Standardization
Provided by IHS under license with ISO
No reproduction or networking permitted without license from IHS
Not for Resale

24.2.1.3.2 Device-Type Monitoring Event Sequences

There are no events generated as a result of this service.

24.2.1.3.3 Call-Type Monitoring Event Sequences

There are no events generated as a result of this service.

24.2.1.3.4 Functional Requirements

1. This service allows the switching function to inform the computing function that the switching function has resumed a previously suspended data path.

24.2.2 Data Path Suspended

S → C

The Data Path Suspended service provides information that a data path has been suspended.

24.2.2.1 Service Request

Table 24-10 Data Path Suspended—Service Request

Parameter Name	Type	M/ O/C	Description
ioCrossRefID	IOCrossRefID	M	Specifies the cross reference identifier associated with the data path and whether the computing function or switching function started the data path.
ioRegisterReqID	IORegisterReqID	C	Specifies the I/O register request identifier associated with the registration for I/O services. This parameter is mandatory if the switching function supports I/O registration and the I/O Data Path was requested from the switching function, and shall not be provided otherwise.
security	CSTASecurityData	O	Specifies timestamp information, message sequence number, and security information.
privateData	CSTAPrivateData	O	Specifies non-standardized information.

24.2.2.2 Service Response

This service follows the atomic acknowledgement model for this service request.

24.2.2.2.1 Positive Acknowledgement

Table 24-11 Data Path Suspended—Positive Acknowledgement

Parameter Name	Type	M/ O/C	Description
security	CSTASecurityData	O	Specifies timestamp information, message sequence number, and security information.
privateData	CSTAPrivateData	O	Specifies non-standardized information.

24.2.2.2.2 Negative Acknowledgement

The negative acknowledgement error codes are described in 12.2.14, “ErrorValue”, on page 115.

© ISO/IEC 2007 – All rights reserved

Copyright International Organization for Standardization
Provided by IHS under license with ISO
No reproduction or networking permitted without license from IHS
Not for Resale

24.2.2.3 Operational Model

24.2.2.3.1 Connection State Transitions

There are no connection state changes due to this service.

24.2.2.3.2 Device-Type Monitoring Event Sequences

There are no events generated as a result of this service.

24.2.2.3.3 Call-Type Monitoring Event Sequences

There are no events generated as a result of this service.

24.2.2.3.4 Functional Requirements

1. This service allows the switching function to inform the computing function that the switching function has suspended a data path. The Resume Data Path service may then be used to resume the flow of data on the data path.

24.2.3 Fast Data

C ◄► S

The Fast Data service transfers data to/from a specified CSTA object. The services results in a data path to be created for only the duration of sending information contained in the Fast Data service request.

24.2.3.1 Service Request

Table 24-12 Fast Data—Service Request

Parameter Name	Type	M/ O/C	Description
ioRegisterReqID	IORegisterReqID	C	Specifies the I/O register request identifier associated with the registration for I/O services. This parameter is mandatory if the switching function supports I/O registration and the I/O Data Path was requested from the switching function, and shall not be provided otherwise.
object	Choice Structure	M	Specifies the object with which a data path should be initiated. This shall be one of the following choices: • Device (DeviceID) - specifies the device upon which the data path is to be started. • Call (ConnectionID) - specifies the call (connection) upon which the data path is to be started.
dataPathType	Enumerated	O	Specifies the data-type of the data path. The complete set of possible values is: • text - a digitally encoded text stream • voice - a digitally encoded voice stream.

© ISO/IEC 2007 – All rights reserved

Copyright International Organization for Standardization
Provided by IHS under license with ISO
No reproduction or networking permitted without license from IHS
Not for Resale

Table 24-12 Fast Data—Service Request (continued)

Parameter Name	Type	M/ O/C	Description
displayAttributes	Structure	O	Specifies information about the display to be updated. This parameter may only be provided if the ioData is being sent to a display on a device. The list contains the following components: • displayID (C) DisplayID - Specifies which display on the physical device needs to be updated. If the device has only one display this component may be omitted, but it may also be filled in (specifying the one and only displayID). If the device has more than one display and the service will be used to update a display, than this component shall be provided. • physicalBaseRowNumber (O) Value - Specifies the row number of the physical base, i.e. the logical row that appears at the first row of the physical display. This parameter may be omitted or may be present when it needs to be changed. The parameter shall be omitted when it is not relevant because the number of physical rows is equal to the number of logical rows. • physicalBaseColumnNumber (O) Value - Specifies the column number of the physical base, i.e. the logical column that appears at the first column of the physical display. This parameter may be omitted or may be present when it needs to be changed. This parameter shall be omitted when it is not relevant because the number of physical columns is equal to the number of logical columns. • offset (O) Value - This component specifies the offset, in number-of-characters (not bytes in the ioData message string), where text is to start on the display. Allowed values are from zero (default) to (MaxNbrOfLogicalColumns * MaxNbrOfLogicalRows - 1). Non-printable characters (e.g. Carriage Return (CR), Line Feed (LF), and Tab) are counted in determining offsets and the message length.
ioData	Characters (240)	M	Specifies the data to be sent.
security	CSTASecurityData	O	Specifies timestamp information, message sequence number, and security information.
privateData	CSTAPrivateData	O	Specifies non-standardized information.

24.2.3.2 Service Response

This service follows the atomic acknowledgement model for this service request.

24.2.3.2.1 Positive Acknowledgement

Table 24-13 Fast Data—Positive Acknowledgement

Parameter Name	Type	M/ O/C	Description
security	CSTASecurityData	O	Specifies timestamp information, message sequence number, and security information.
privateData	CSTAPrivateData	O	Specifies non-standardized information.

© ISO/IEC 2007 – All rights reserved

Copyright International Organization for Standardization
Provided by IHS under license with ISO
No reproduction or networking permitted without license from IHS
Not for Resale

24.2.3.2.2 Negative Acknowledgement

The negative acknowledgement error codes are described in 12.2.14, “ErrorValue”, on page 115.

24.2.3.3 Operational Model

24.2.3.3.1 Connection State Transitions

There are no connection state changes due to this service.

24.2.3.3.2 Device-Type Monitoring Event Sequences

There are no events generated as a result of this service.

24.2.3.3.3 Call-Type Monitoring Event Sequences

There are no events generated as a result of this service.

24.2.3.3.4 Functional Requirements

1. This service is functionally similar to the sequence of service requests: “Start Data Path, Send Data, Stop Data Path”.
2. To send object-dependent data (e.g. to present information on a device’s display) via the Fast Data service, CSTA applications should know the characteristics of the target object.
3. When the physicalBaseRowNumber and/or the physicalBaseColumnNumber parameters are provided in the service request with values that are different from the current values, the switching function can either accept the service and modify the relative positions of the logical and physical displays (i.e., scrolling) or it can reject the service if it does not support this capability as indicated by the capability exchange services.

24.2.4 Resume Data Path

C ⟶ S

The Resume Data Path requests the switching function to resume a currently suspended data path.

24.2.4.1 Service Request

Table 24-14 Resume Data Path—Service Request

Parameter Name	Type	M/ O/C	Description
ioCrossRefID	IOCrossRefID	M	Specifies the cross reference identifier associated with the data path and whether the computing function or switching function started the data path.
ioRegisterReqID	IORegisterReqID	C	Specifies the I/O register request identifier associated with the registration for I/O services. This parameter is mandatory if the switching function supports I/O registration and the I/O Data Path was requested from the switching function, and shall not be provided otherwise.
security	CSTASecurityData	O	Specifies timestamp information, message sequence number, and security information.
privateData	CSTAPrivateData	O	Specifies non-standardized information.

© ISO/IEC 2007 – All rights reserved

Copyright International Organization for Standardization
Provided by IHS under license with ISO
No reproduction or networking permitted without license from IHS
Not for Resale

24.2.4.2 Service Response

This service follows the atomic acknowledgement model for this service request.

24.2.4.2.1 Positive Acknowledgement

Table 24-15 Resume Data Path—Positive Acknowledgement

Parameter Name	Type	M/ O/C	Description
security	CSTASecurityData	O	Specifies timestamp information, message sequence number, and security information.
privateData	CSTAPrivateData	O	Specifies non-standardized information.

24.2.4.2.2 Negative Acknowledgement

The negative acknowledgement error codes are described in 12.2.14, “ErrorValue”, on page 115.

24.2.4.3 Operational Model

24.2.4.3.1 Connection State Transitions

There are no connection state changes due to this service.

24.2.4.3.2 Device-Type Monitoring Event Sequences

There are no events generated as a result of this service.

24.2.4.3.3 Call-Type Monitoring Event Sequences

There are no events generated as a result of this service.

24.2.4.3.4 Functional Requirements

1. If the data path is already resumed, this service may or may not be rejected (as indicated by the capability exchange services).
2. Some implementations may send the Data Path Resumed service as the result of this service (as indicated by the capability exchange services).

24.2.5 Send Broadcast Data

C ⟶ S

The Send Broadcast Data service writes to all open data paths for a given application association and data path type.

24.2.5.1 Service Request

Table 24-16 Send Broadcast data—Service Request

Parameter Name	Type	M/ O/C	Description
ioData	Characters (240)	M	Specifies the data to be sent.

© ISO/IEC 2007 – All rights reserved

Copyright International Organization for Standardization
Provided by IHS under license with ISO
No reproduction or networking permitted without license from IHS
Not for Resale

Table 24-16 Send Broadcast data—Service Request (continued)

Parameter Name	Type	M/ O/C	Description
dataPathType	Enumerated	O	Specifies the data-type of the data path. The complete set of possible values is: • text - a digitally encoded text stream • voice - a digitally encoded voice stream
displayAttributes	List of Values	O	Specifies information about the display to be updated. This parameter may only be provided if the ioData is being sent to displays on devices. The list contains the following components: • physicalBaseRowNumber (O) Value - Specifies the row number of the physical base, i.e. the logical row that appears at the first row of the physical display. This parameter may be omitted or may be present when it needs to be changed. The parameter shall be omitted when it is not relevant because the number of physical rows is equal to the number of logical rows. • physicalBaseColumnNumber (O) Value - Specifies the column number of the physical base, i.e. the logical column that appears at the first column of the physical display. This parameter may be omitted or may be present when it needs to be changed. This parameter shall be omitted when it is not relevant because the number of physical columns is equal to the number of logical columns. • offset (O) - This component specifies the offset, in number-of-characters (not bytes in the ioData message string), where text is to start on the display. Allowed values are from zero (default) to (MaxNbrOfLogicalColumns * MaxNbrOfLogicalRows - 1). Non-printable characters (e.g. Carriage Return (CR), Line Feed (LF), and Tab) are counted in determining offsets and the message length.
security	CSTASecurityData	O	Specifies timestamp information, message sequence number, and security information.
privateData	CSTAPrivateData	O	Specifies non-standardized information.

24.2.5.2 Service Response

This service follows the atomic acknowledgement model for this service request.

24.2.5.2.1 Positive Acknowledgement

Table 24-17 Send Broadcast Data—Positive Acknowledgement

Parameter Name	Type	M/ O/C	Description
security	CSTASecurityData	O	Specifies timestamp information, message sequence number, and security information.
privateData	CSTAPrivateData	O	Specifies non-standardized information.

24.2.5.2.2 Negative Acknowledgement

The negative acknowledgement error codes are described in 12.2.14, “ErrorValue”, on page 115.

© ISO/IEC 2007 – All rights reserved

Copyright International Organization for Standardization
Provided by IHS under license with ISO
No reproduction or networking permitted without license from IHS
Not for Resale

24.2.5.3 Operational Model

24.2.5.3.1 Connection State Transitions

There are no connection state changes due to this service.

24.2.5.3.2 Device-Type Monitoring Event Sequences

There are no events generated as a result of this service.

24.2.5.3.3 Call-Type Monitoring Event Sequences

There are no events generated as a result of this service.

24.2.5.3.4 Functional Requirements

1. This service transfers data from the computing function to all CSTA objects for which an appropriate data path exists.
2. The response to this service request only indicates that the service request was received correctly, that none of the enumerated error conditions has been encountered, and that processing of the data is proceeding on the assumption that the data is otherwise correct.
3. To send object-dependent data (e.g. to present information on a device's display) via the Send Broadcast Data service, the switching function should know the characteristics of the target object. This service may be used, for example, to send information to all video displays and audio channels.
4. When the physicalBaseRowNumber and/or the physicalBaseColumnNumber parameters are provided in the service request with values that are different from the current values, the switching function can either accept the service and modify the relative positions of the logical and physical displays (i.e., scrolling) or it can reject the service if it does not support this capability as indicated by the capability exchange services.

24.2.6 Send Data

S ◄► C

The Send Data service sends data to a specified data path.

This is a bi-directional service.

24.2.6.1 Service Request

Table 24-18 Send Data—Service Request

Parameter Name	Type	M/ O/C	Description
ioCrossRefID	IOCrossRefID	M	Specifies the cross reference identifier associated with the data path and whether the computing function or switching function started the data path.
ioRegisterReqID	IORegisterReqID	C	Specifies the I/O register request identifier associated with the registration for I/O services. This parameter is mandatory if the switching function supports I/O registration and the I/O Data Path was requested from the switching function, and shall not be provided otherwise.

© ISO/IEC 2007 – All rights reserved

Copyright International Organization for Standardization
Provided by IHS under license with ISO
No reproduction or networking permitted without license from IHS
Not for Resale

Table 24-18 Send Data—Service Request (continued)

Parameter Name	Type	M/ O/C	Description
displayAttributes	List of Values	O	Specifies information about the display to be updated. This parameter may only be provided if the ioData is being sent to a display on a device. The list contains the following components: • physicalBaseRowNumber (O) Value - Specifies the row number of the physical base, i.e. the logical row that appears at the first row of the physical display. This parameter may be omitted or may be present when it needs to be changed. The parameter shall be omitted when it is not relevant because the number of physical rows is equal to the number of logical rows. • physicalBaseColumnNumber (O) Value - Specifies the column number of the physical base, i.e. the logical column that appears at the first column of the physical display. This parameter may be omitted or may be present when it needs to be changed. This parameter shall be omitted when it is not relevant because the number of physical columns is equal to the number of logical columns. • offset (O) - This parameter specifies the offset, in number-of-characters (not bytes in the ioData message string), where text is to start on the display. Allowed values are from zero (default) to (MaxNbrOfLogicalColumns * MaxNbrOfLogicalRows - 1). Non-printable characters (e.g. Carriage Return (CR), Line Feed (LF), and Tab) are counted in determining offsets and the message length.
ioData	Characters (240)	M	Specifies the data to be sent. When writing to a display on a device, this specifies the data to place on the display as a string of characters consisting of the text on each row of the display (including spaces) concatenated together. If a null string is sent, the display will be cleared.
ioCause	EventCause	O	Specifies the reason why data is being sent. The complete set of possible values is: • terminationCharacterReceived - the specified termination character was received. • characterCountReached - the specified number of characters was reached. • timeout - a timeout occurred. • switchingFunctionTerminated - the switching function terminated collection before other termination conditions were encountered. Note that even though ioCause parameter is used in a service, the EventCause parameter type is used to represent the reason why the data is being sent.
security	CSTASecurityData	O	Specifies timestamp information, message sequence number, and security information.
privateData	CSTAPrivateData	O	Specifies non-standardized information.

24.2.6.2 Service Response

This service follows the atomic acknowledgement model for this service request.

© ISO/IEC 2007 – All rights reserved

Copyright International Organization for Standardization
Provided by IHS under license with ISO
No reproduction or networking permitted without license from IHS
Not for Resale

24.2.6.2.1 Positive Acknowledgement

Table 24-19 Send Data—Positive Acknowledgement

Parameter Name	Type	M/ O/C	Description
security	CSTASecurityData	O	Specifies timestamp information, message sequence number, and security information.
privateData	CSTAPrivateData	O	Specifies non-standardized information.

24.2.6.2.2 Negative Acknowledgement

The negative acknowledgement error codes are described in 12.2.14, “ErrorValue”, on page 115.

24.2.6.3 Operational Model

24.2.6.3.1 Connection State Transitions

There are no connection state changes due to this service.

24.2.6.3.2 Device-Type Monitoring Event Sequences

There are no events generated as a result of this service.

24.2.6.3.3 Call-Type Monitoring Event Sequences

There are no events generated as a result of this service.

24.2.6.3.4 Functional Requirements

1. The response to this service request only indicates that the request was received correctly, that none of the enumerated error conditions have been encountered, and that processing of the data is proceeding on the assumption that the data is otherwise correct.
2. To send object-dependent data (e.g. to present information on a device’s display) via the Send Data service, the computing function should know the characteristics of the target object. This service may, for example, be used to send information to a display or an audio channel on a device.
3. When the physicalBaseRowNumber and/or the physicalBaseColumnNumber parameters are provided in the service request with values that are different from the current values, the switching function can either accept the service and modify the relative positions of the logical and physical displays (i.e., scrolling) or it can reject the service if it does not support this capability as indicated by the capability exchange services.

24.2.7 Send Multicast Data

C → S

The Send Multicast Data service writes to multiple data paths specified in the service request.

24.2.7.1 Service Request

Table 24-20 Send Multicast Data—Service Request

Parameter Name	Type	M/ O/C	Description
ioCrossRefIDList	List of IOCrossRefID	M	Specifies the list of I/O Cross Reference Identifiers that should receive the data.

© ISO/IEC 2007 – All rights reserved
Copyright International Organization for Standardization
Provided by IHS under license with ISO
No reproduction or networking permitted without license from IHS
Not for Resale

Table 24-20 Send Multicast Data—Service Request (continued)

Parameter Name	Type	M/ O/C	Description
ioData	Characters (240)	O	Specifies the data to be sent.
displayAttributes	List of Values	O	Specifies information about the display to be updated. This parameter may only be provided if the ioData is being sent displays on devices. The list contains the following components: • physicalBaseRowNumber (O) Value - Specifies the row number of the physical base, i.e. the logical row that appears at the first row of the physical display. This parameter may be omitted or may be present when it needs to be changed. The parameter shall be omitted when it is not relevant because the number of physical rows is equal to the number of logical rows. • physicalBaseColumnNumber (O) Value - Specifies the column number of the physical base, i.e. the logical column that appears at the first column of the physical display. This parameter may be omitted or may be present when it needs to be changed. This parameter shall be omitted when it is not relevant because the number of physical columns is equal to the number of logical columns. • offset (O) - This component specifies the offset, in number-of-characters (not bytes in the ioData message string), where text is to start on the display. Allowed values are from zero (default) to (MaxNbrOfLogicalColumns * MaxNbrOfLogicalRows - 1). Non-printable characters (e.g. Carriage Return (CR), Line Feed (LF), and Tab) are counted in determining offsets and the message length.
security	CSTASecurityData	O	Specifies timestamp information, message sequence number, and security information.
privateData	CSTAPrivateData	O	Specifies non-standardized information.

24.2.7.2 Service Response

This service follows the atomic acknowledgement model for this service request.

24.2.7.2.1 Positive Acknowledgement

Table 24-21 Send Multicast Data—Positive Acknowledgement

Parameter Name	Type	M/ O/C	Description
security	CSTASecurityData	O	Specifies timestamp information, message sequence number, and security information.
privateData	CSTAPrivateData	O	Specifies non-standardized information.

24.2.7.2.2 Negative Acknowledgement

The negative acknowledgement error codes are described in 12.2.14, “ErrorValue”, on page 115.

24.2.7.3 Operational Model

© ISO/IEC 2007 – All rights reserved

Copyright International Organization for Standardization
Provided by IHS under license with ISO
No reproduction or networking permitted without license from IHS
Not for Resale

24.2.7.3.1 Connection State Transitions

There are no connection state changes due to this service.

24.2.7.3.2 Device-Type Monitoring Event Sequences

There are no events generated as a result of this service.

24.2.7.3.3 Call-Type Monitoring Event Sequences

There are no events generated as a result of this service.

24.2.7.3.4 Functional Requirements

1. This service sends data from the computing function to one or more CSTA objects.
2. The response to this service request only indicates that the request was received correctly, that none of the enumerated error conditions has been encountered, and that processing of the data is proceeding on the assumption that the data is otherwise correct.
3. To send object-dependent data (e.g. to present information on a device's display) via the Send Multicast Data Service, the computing function should know the characteristics of the target objects. This service may be used, for example, to send information to multiple displays and audio channels.
4. When the physicalBaseRowNumber and/or the physicalBaseColumnNumber parameters are provided in the service request with values that are different from the current values, the switching function can either accept the service and modify the relative positions of the logical and physical displays (i.e., scrolling) or it can reject the service if it does not support this capability as indicated by the capability exchange services.

24.2.8 Start Data Path

C ◄► S

The Start Data Path service starts a data path on the specified object.

This is a bi-directional service.

24.2.8.1 Service Request

Table 24-22 Start Data Path—Service Request

Parameter Name	Type	M/ O/C	Description
ioRegisterReqID	IORegisterReqID	C	Specifies the I/O register request identifier associated with the registration for I/O services. This parameter is mandatory if the switching function supports I/O registration and the I/O Data Path was requested from the switching function, and shall not be provided otherwise.
object	Choice Structure	M	Specifies the object to which a data path should be initiated. The complete set of possible objects is: • Device (DeviceID) - specifies the device upon which the data path is to be started. • Call (ConnectionID) - specifies the call (connection) upon which the data path is to be started.

© ISO/IEC 2007 – All rights reserved

Copyright International Organization for Standardization
Provided by IHS under license with ISO
No reproduction or networking permitted without license from IHS
Not for Resale

Table 24-22 Start Data Path—Service Request (continued)

Parameter Name	Type	M/ O/C	Description
dataPathDirection	Enumerated	O	Specifies the direction of the data path. The complete set of possible values is: • from the computing function to the identified object • from the identified object to the computing function • bi-directional between the computing function and the identified object.
dataPathType	Enumerated	O	Specifies the data-type of the data path. The complete set of possible values is: • text - a digitally encoded text stream • voice - a digitally encoded voice stream
displayID	DisplayID	C	Specifies which display on the physical device needs to be updated. If the device has only one display this parameter may be omitted, but it may also be filled in (specifying the one and only displayID). If the device has more than one display and the data path will be used to update a display, than this parameter shall be provided.
numberOfCharsToCollect	Value	O	Specifies the number of characters to collect before sending collected characters on the data path.
terminationCharacter	Character(1)	O	Specifies an ASCII (IA5) character that, if received, causes the switching function to send collected characters on the data path.
timeout	Value	O	Specifies a duration in seconds such that characters will be sent on the data path.
security	CSTASecurityData	O	Specifies timestamp information, message sequence number, and security information.
privateData	CSTAPrivateData	O	Specifies non-standardized information.

24.2.8.2 Service Response

This service follows the atomic acknowledgement model for this service request.

24.2.8.2.1 Positive Acknowledgement

Table 24-23 Start Data Path—Positive Acknowledgement

Parameter Name	Type	M/ O/C	Description
ioCrossRefID	IOCrossRefID	M	Specifies the cross reference identifier associated with the data path that has been created.
numberOfCharsToCollect	Value	O	Specifies the number of characters to collect before sending collected characters on the data path.
terminationCharacter	Character(1)	O	Specifies an ASCII (IA5) character that, if received, causes the switching function to send collected characters on the data path.
timeout	Value	O	Specifies a duration in seconds such that characters will be sent on the data path.
security	CSTASecurityData	O	Specifies timestamp information, message sequence number, and security information.
privateData	CSTAPrivateData	O	Specifies non-standardized information.

© ISO/IEC 2007 – All rights reserved

Copyright International Organization for Standardization
Provided by IHS under license with ISO
No reproduction or networking permitted without license from IHS
Not for Resale

24.2.8.2.2 Negative Acknowledgement

The negative acknowledgement error codes are described in 12.2.14, “ErrorValue”, on page 115.

24.2.8.3 Operational Model

24.2.8.3.1 Connection State Transitions

There are no connection state changes due to this service.

24.2.8.3.2 Device-Type Monitoring Event Sequences

There are no events generated as a result of this service.

24.2.8.3.3 Call-Type Monitoring Event Sequences

There are no events generated as a result of this service.

24.2.8.3.4 Functional Requirements

1. Starting a device’s data path means that the computing function has requested control of the device either on its own initiative or at the request of a device user. When a computing function that has a data path association with a device starts a data path, data may be collected by the switching function prior to informing the computing function of an invocation request. Whether or not this “automatic starting” of a data path occurs is implementation specific.
2. If a termination condition, as specified by the terminationCharacter parameter, is encountered, then data is returned to the requesting client and data collection continues until the termination condition is encountered again or until the data path is explicitly stopped.

24.2.9 Stop Data Path

S ◄► C

The Stop Data Path service terminates an existing data path.

This is a bi-directional service.

24.2.9.1 Service Request

Table 24-24 Stop Data Path—Service Request

Parameter Name	Type	M/ O/C	Description
ioCrossRefID	IOCrossRefID	M	Specifies the cross reference identifier associated with the data path to be terminated.
ioRegisterReqID	IORegisterReqID	C	Specifies the I/O register request identifier associated with the registration for I/O services. This parameter is mandatory if the switching function supports I/O registration and the I/O Data Path was requested from the switching function, and shall not be provided otherwise.
security	CSTASecurityData	O	Specifies timestamp information, message sequence number, and security information.
privateData	CSTAPrivateData	O	Specifies non-standardized information.

--`,,```,,,,````-`-`,,`,,`,`,,`---
© ISO/IEC 2007 – All rights reserved
Copyright International Organization for Standardization
Provided by IHS under license with ISO
No reproduction or networking permitted without license from IHS
Not for Resale

24.2.9.2 Service Response

This service follows the atomic acknowledgement model for this service request.

24.2.9.2.1 Positive Acknowledgement

Table 24-25 Stop Data Path—Positive Acknowledgement

Parameter Name	Type	M/ O/C	Description
security	CSTASecurityData	O	Specifies timestamp information, message sequence number, and security information.
privateData	CSTAPrivateData	O	Specifies non-standardized information.

24.2.9.2.2 Negative Acknowledgement

The negative acknowledgement error codes are described in 12.2.14, “ErrorValue”, on page 115.

24.2.9.3 Operational Model

24.2.9.3.1 Connection State Transitions

There are no connection state changes due to this service.

24.2.9.3.2 Device-Type Monitoring Event Sequences

There are no events generated as a result of this service.

24.2.9.3.3 Call-Type Monitoring Event Sequences

There are no events generated as a result of this service.

24.2.9.3.4 Functional Requirements

1. It is not necessary for a suspended data path to be resumed for this service to be carried out.

24.2.10 Suspend Data Path

The Suspend Data Path suspends a specified data path but does not destroy the data path.

This is a bi-directional service.

24.2.10.1 Service Request

Table 24-26 Suspend Data Path—Service Request

Parameter Name	Type	M/ O/C	Description
ioCrossRefID	IOCrossRefID	M	Specifies the cross reference identifier associated with the data path to be suspended.

© ISO/IEC 2007 – All rights reserved

--`,,```,,,,````-`-`,,`,,`,`,,`---
Copyright International Organization for Standardization
Provided by IHS under license with ISO
No reproduction or networking permitted without license from IHS
Not for Resale

Table 24-26 Suspend Data Path—Service Request (continued)

Parameter Name	Type	M/ O/C	Description
ioRegisterReqID	IORegisterReqID	C	Specifies the I/O register request identifier associated with the registration for I/O services. This parameter is mandatory if the switching function supports I/O registration and the I/O Data Path was requested from the switching function, and shall not be provided otherwise.
security	CSTASecurityData	O	Specifies timestamp information, message sequence number, and security information.
privateData	CSTAPrivateData	O	Specifies non-standardized information.

24.2.10.2 Service Response

This service follows the atomic acknowledgement model for this service request.

24.2.10.2.1 Positive Acknowledgement

Table 24-27 Suspend Data Path—Positive Acknowledgement

Parameter Name	Type	M/ O/C	Description
security	CSTASecurityData	O	Specifies timestamp information, message sequence number, and security information.
privateData	CSTAPrivateData	O	Specifies non-standardized information.

24.2.10.2.2 Negative Acknowledgement

The negative acknowledgement error codes are described in 12.2.14, “ErrorValue”, on page 115.

24.2.10.3 Operational Model

24.2.10.3.1 Connection State Transitions

There are no connection state changes due to this service.

24.2.10.3.2 Device-Type Monitoring Event Sequences

There are no events generated as a result of this service.

24.2.10.3.3 Call-Type Monitoring Event Sequences

There are no events generated as a result of this service.

24.2.10.3.4 Functional Requirements

1. The sender informs its peer that the data path should be suspended, but not destroyed. The Resume Data Path service may then be used to resume the flow of data on the data path.
2. This service allows the consumer of the data path to start and stop the flow of data. It is expected that no flow control of the data that has been suspended will occur. That is, if a data path is suspended the consumer is not provided with the data between the time the data path was suspended and the time it was resumed.

© ISO/IEC 2007 – All rights reserved

Copyright International Organization for Standardization
Provided by IHS under license with ISO
No reproduction or networking permitted without license from IHS
Not for Resale

25 Data Collection Services

This clause includes the data collection services.

25.1 Services

Table 25-1 Data Collection Services Summary

Data Collection Service	Description	Pg.
25.1.1 Data Collected	The Data Collected service provides information (e.g., telephony tones, DTMF digits) that was received over a connection as part of the data collection.	531
24.2.1 Data Path Resumed	The Data Collection Resumed service provides information that a previously suspended data collection has been resumed.	515
24.2.2 Data Path Suspended	The Data Collection Suspended service provides information that a data collection has been suspended.	516
24.2.4 Resume Data Path	The Resume Data Collection service requests the switching function to resume a currently suspended data collection.	519
24.2.8 Start Data Path	The Start Data Collection service starts data collection on a connection.	526
24.2.9 Stop Data Path	The Stop Data Collection service terminates an existing data collection.	528
24.2.10 Suspend Data Path	The Suspend Data Collection service suspends a specified data collection but does not destroy the data collection.	529

25.1.1 Data Collected

S → C

The Data Collected service sends data that was received over a connection to the computing function.

25.1.1.1 Service Request

Table 25-2 Data Collected—Service Request

Parameter Name	Type	M/ O/C	Description
dcollCrossRefID	DcollCrossRefID	M	Specifies the cross reference identifier associated with the data collection.
digitsData	Structure	C	Specifies the collected DTMF/rotary pulse digit information. This parameter shall be provided if the dcollType specified in the Start Data Collection service is digits, otherwise it shall not be provided. This parameter consists of the following components: • digitsDetected (M) Characters(64) - Specifies the ASCII (IA5) sequence of DTMF/rotary pulse digits detected. • digitsDuration (O) List of Values - Specifies the list of corresponding digit durations. If this component is provided, a digit duration shall be provided for each detected digit. This component may only be provided for DTMF digits. • digitsPauseDuration (O) List of Values - Specifies the list of corresponding pauses between the last digit and this one. If this component is provided, a pause duration shall be provided for each detected digit.

© ISO/IEC 2007 – All rights reserved

--`,,```,,,,````-`-`,,`,,`,`,,`---
Copyright International Organization for Standardization
Provided by IHS under license with ISO
No reproduction or networking permitted without license from IHS
Not for Resale

Table 25-2 Data Collected—Service Request (continued)

Parameter Name	Type	M/ O/C	Description

telTonesData	Structure	C	Specifies the collected telephony tones information. This parameter shall be provided if the dcollType specified in the Start Data Collection service is telephony tones, otherwise it shall not be provided. This parameter consists of the following component:
			• toneDetected (M) Enumerated - Specifies the telephony tone detected. The complete set of possible values is:
			  • beep
			  • billing
			  • busy
			  • carrier
			  • confirmation
			  • dial
			  • faxCNG
			  • hold
			  • howler
			  • intrusion
			  • modemCNG
			  • park
			  • record warning (indicates call may be being recorded)
			  • reorder
			  • ringback
			  • silence
			  • SIT VC
			  • SIT IC
			  • SIT RO
			  • SIT NC
			  • other
			• toneFrequency (O) Value - Specifies the switching function determined frequency, in Hz.,of the detected tone. This component shall not be provided if the toneDetected is anything other than “other”.
			• toneDuration (O) Value - Specifies the duration, in milliseconds, of the detected tone. This component shall not be provided if the toneDetected is anything other than “other”.
			• tonePauseDuration (O) Value - Specifies the duration, in milliseconds, of the pause between the last tone and this one. This component shall not be provided if the toneDetected is anything other than “other”.

connectionInfo	ConnectionInformation	O	Specifies the connection information associated with the connection. If this parameter is not present, then the connection information is switching function specific.

© ISO/IEC 2007 – All rights reserved

Copyright International Organization for Standardization
Provided by IHS under license with ISO
No reproduction or networking permitted without license from IHS
Not for Resale

Table 25-2 Data Collected—Service Request (continued)

Parameter Name	Type	M/ O/C	Description
dcollCause	Enumerated	O	Specifies the reason why data is being sent. The complete set of possible values is: • flushCharReceived - the specified flush character was received (for digits collection only) • charCountReached - the specified number of characters was reached (for digits collection only) • timeout - a timeout occurred. • sfTerminated - the switching function terminated collection before other termination conditions were encountered.
security	CSTASecurityData	O	Specifies timestamp information, message sequence number, and security information.
privateData	CSTAPrivateData	O	Specifies non-standardized information.

25.1.1.2 Service Response

This service follows the atomic acknowledgement model for this service request.

25.1.1.2.1 Positive Acknowledgement

Table 25-3 Data Collected—Positive Acknowledgement

Parameter Name	Type	M/ O/C	Description
security	CSTASecurityData	O	Specifies timestamp information, message sequence number, and security information.
privateData	CSTAPrivateData	O	Specifies non-standardized information.

25.1.1.2.2 Negative Acknowledgement

The negative acknowledgement error codes are described in 12.2.14, “ErrorValue”, on page 115.

25.1.1.3 Operational Model

25.1.1.3.1 Connection State Transitions

There are no connection state changes due to this service.

25.1.1.3.2 Device-Type Monitoring Event Sequences

There are no events generated as a result of this service.

25.1.1.3.3 Call-Type Monitoring Event Sequences

There are no events generated as a result of this service.

25.1.1.3.4 Functional Requirements

None.

© ISO/IEC 2007 – All rights reserved

Copyright International Organization for Standardization
Provided by IHS under license with ISO
No reproduction or networking permitted without license from IHS
Not for Resale

25.1.2 Data Collection Resumed

S → C

The Data Collection Resumed service provides information that a previously suspended data collection has been resumed.

25.1.2.1 Service Request

Table 25-4 Data Collection Resumed—Service Request

Parameter Name	Type	M/ O/C	Description
dcollCrossRefID	DcollCrossRefID	M	Specifies the cross reference identifier associated with the data collection.
security	CSTASecurityData	O	Specifies timestamp information, message sequence number, and security information.
privateData	CSTAPrivateData	O	Specifies non-standardized information.

25.1.2.2 Service Response

This service follows the atomic acknowledgement model for this service request.

25.1.2.2.1 Positive Acknowledgement

Table 25-5 Data Collection Resumed—Positive Acknowledgement

Parameter Name	Type	M/ O/C	Description
security	CSTASecurityData	O	Specifies timestamp information, message sequence number, and security information.
privateData	CSTAPrivateData	O	Specifies non-standardized information.

25.1.2.2.2 Negative Acknowledgement

The negative acknowledgement error codes are described in 12.2.14, “ErrorValue”, on page 115.

25.1.2.3 Operational Model

25.1.2.3.1 Connection State Transitions

There are no connection state changes due to this service.

25.1.2.3.2 Device-Type Monitoring Event Sequences

There are no events generated as a result of this service.

25.1.2.3.3 Call-Type Monitoring Event Sequences

There are no events generated as a result of this service.

25.1.2.3.4 Functional Requirements

1. This services allows the switching function to inform the computing function that the switching function has resumed a previously suspended data collection.

© ISO/IEC 2007 – All rights reserved

Copyright International Organization for Standardization
Provided by IHS under license with ISO
No reproduction or networking permitted without license from IHS
Not for Resale

25.1.3 Data Collection Suspended

S → C

The Data Collection Suspended service provides information that a data collection has been suspended.

25.1.3.1 Service Request

Table 25-6 Data Collection Suspended—Service Request

Parameter Name	Type	M/ O/C	Description
dcollCrossRefID	DcollCrossRefID	M	Specifies the cross reference identifier associated with the data collection.
security	CSTASecurityData	O	Specifies timestamp information, message sequence number, and security information.
privateData	CSTAPrivateData	O	Specifies non-standardized information.

25.1.3.2 Service Response

This service follows the atomic acknowledgement model for this service request.

25.1.3.2.1 Positive Acknowledgement

Table 25-7 Data Collection Suspended—Positive Acknowledgement

Parameter Name	Type	M/ O/C	Description
security	CSTASecurityData	O	Specifies timestamp information, message sequence number, and security information.
privateData	CSTAPrivateData	O	Specifies non-standardized information.

25.1.3.2.2 Negative Acknowledgement

The negative acknowledgement error codes are described in 12.2.14, “ErrorValue”, on page 115.

25.1.3.3 Operational Model

25.1.3.3.1 Connection State Transitions

There are no connection state changes due to this service.

25.1.3.3.2 Device-Type Monitoring Event Sequences

There are no events generated as a result of this service.

25.1.3.3.3 Call-Type Monitoring Event Sequences

There are no events generated as a result of this service.

25.1.3.3.4 Functional Requirements

1. This services allows the switching function to inform the computing function that the switching function has suspended a data collection. The Resume Data Collection service may then be used to resume the flow of data on the data collection.

© ISO/IEC 2007 – All rights reserved

Copyright International Organization for Standardization
Provided by IHS under license with ISO
No reproduction or networking permitted without license from IHS
Not for Resale

25.1.4 Resume Data Collection

C ⟶ S

The Resume Data Collection requests the switching function to resume a currently suspended data collection.

25.1.4.1 Service Request

Table 25-8 Resume Data Collection —Service Request

Parameter Name	Type	M/ O/C	Description
dcollCrossRefID	DcollCrossRefID	M	Specifies the cross reference identifier associated with the data collection.
security	CSTASecurityData	O	Specifies timestamp information, message sequence number, and security information.
privateData	CSTAPrivateData	O	Specifies non-standardized information.

25.1.4.2 Service Response

This service follows the atomic acknowledgement model for this service request.

25.1.4.2.1 Positive Acknowledgement

Table 25-9 Resume Data Collection —Positive Acknowledgement

Parameter Name	Type	M/ O/C	Description
security	CSTASecurityData	O	Specifies timestamp information, message sequence number, and security information.
privateData	CSTAPrivateData	O	Specifies non-standardized information.

25.1.4.2.2 Negative Acknowledgement

The negative acknowledgement error codes are described in 12.2.14, “ErrorValue”, on page 115.

25.1.4.3 Operational Model

25.1.4.3.1 Connection State Transitions

There are no connection state changes due to this service.

25.1.4.3.2 Device-Type Monitoring Event Sequences

There are no events generated as a result of this service.

25.1.4.3.3 Call-Type Monitoring Event Sequences

There are no events generated as a result of this service.

25.1.4.3.4 Functional Requirements

1. This service resumes a suspended data collection. If the data collection is not suspended, this service shall be rejected.

© ISO/IEC 2007 – All rights reserved

Copyright International Organization for Standardization
Provided by IHS under license with ISO
No reproduction or networking permitted without license from IHS
Not for Resale

25.1.5 Start Data Collection

C ⟶ S

The Start Data Collection service is used to collect information such as DTMF/rotary pulse digits and telephony tones from a connection at a specified device.

Data Collection may be started on either an existing connection or on the first connection that appears at a device after the service request has been acknowledged.

Data Collection continues until the Stop Data Collection service is used to terminate the collection or until the connection over which data is being collected is cleared. This connection is either an existing connection or the first connection that appears at a device after the service request has been acknowledged.

The service request specifies criteria that specify when the collection of DTMF/rotary pulse digits is reported via the Data Collected service.

25.1.5.1 Service Request

Table 25-10 Start Data Collection —Service Request

Parameter Name	Type	M/ O/C	Description
object	Choice Structure	M	Specifies the object to which a data collection should be initiated. This shall be one of the following choices: • device (DeviceID) - specifies the device upon which the data collection is to be started. Data collection occurs on the next connection at this device and is stopped when this connection is cleared. If there are one or more calls at this device and this choice is selected, then this service request shall be rejected. • call (ConnectionID) - specifies a specific call (connection) upon which the data collection is to be started.
dataCollType	Enumerated	O	Specifies the data-type of the data collection. The complete set of possible values is: • digits - DTMF/rotary pulse digits • telephonyTones - telephony tones.
digitsReportingCriteria	Structure	O	Specifies the criteria associated with the reporting of the DTMF/rotary pulse digits This value may be provided only when the dataCollType value is Digits. This parameter consists of the following components: • numChars (C) Value - specifies the number of characters to collect before sending the Data Collected service with the collected digit characters. • flushChar (C) Character(1) - specifies an ASCII (IA5) character that, if detected, causes any previously unreported digit characters (including this character) to be sent in the Data Collected service. • timeout (C) Value - specifies a duration, in milliseconds, when any previously unreported digit characters are sent in the Data Collected service. If this parameter is provided, at least one component must be provided.
security	CSTASecurityData	O	Specifies timestamp information, message sequence number, and security information.
privateData	CSTAPrivateData	O	Specifies non-standardized information.

© ISO/IEC 2007 – All rights reserved

Copyright International Organization for Standardization
Provided by IHS under license with ISO
No reproduction or networking permitted without license from IHS
Not for Resale

25.1.5.2 Service Response

This service follows the atomic acknowledgement model for this service request.

25.1.5.2.1 Positive Acknowledgement

Table 25-11 Start Data Collection —Positive Acknowledgement

Parameter Name	Type	M/ O/C	Description
dcollCrossRefID	DcollCrossRefID	M	Specifies the cross reference identifier associated with the data collection that has been created.
security	CSTASecurityData	O	Specifies timestamp information, message sequence number, and security information.
privateData	CSTAPrivateData	O	Specifies non-standardized information.

25.1.5.2.2 Negative Acknowledgement

The negative acknowledgement error codes are described in 12.2.14, “ErrorValue”, on page 115.

25.1.5.3 Operational Model

25.1.5.3.1 Connection State Transitions

There are no connection state changes due to this service.

25.1.5.3.2 Device-Type Monitoring Event Sequences

There are no events generated as a result of this service.

25.1.5.3.3 Call-Type Monitoring Event Sequences

There are no events generated as a result of this service.

25.1.5.3.4 Functional Requirements

1. The Start Data Collection service collects information (e.g., DTMF digits, telephony tones) that is received over a connection at a device (i.e. information that has been sent over a connection from another device in the call).
2. The Data Collected service is used to report the collected information. When DTMF/rotary pulse digits are being collected, it is sent when one of the reporting criteria, as specified in the digitsReportingCriteria parameter, is satisfied. When telephony tones are being collected, the Data Collected service is sent after a single telephony tone is collected.
3. The purpose of the Start Data Collection service is to detect digits and tones *sent to* the specified device. However, it cannot be presumed that the source of the digits and tones can be determined by the collection device in every situation (e.g., analog lines).
4. If the digitsReportingCriteria is not provided, the number of digits (for digits collection) that need to be detected before the Data Collected service is generated is switching function specific.
5. For telephonyTones collection, the detected tone is reported via the Data Collected service as soon as the switching function has recognized the tone.
6. If the switching function receives a subsequent request for this service with the object parameter specified as call (connection), and data collection has already started due to a previous Start Data

© ISO/IEC 2007 – All rights reserved

Copyright International Organization for Standardization
Provided by IHS under license with ISO
No reproduction or networking permitted without license from IHS
Not for Resale

Collection service, the switching function shall respond with a negative acknowledgement specifying an error code of “Feature Already Set”.

25.1.6 Stop Data Collection

S ◄► C

The Stop Data Collection service terminates an existing data collection.

25.1.6.1 Service Request

Table 25-12 Stop Data Collection —Service Request

Parameter Name	Type	M/ O/C	Description
dcollCrossRefID	DcollCrossRefID	M	Specifies the cross reference identifier associated with the data collection to be terminated.
security	CSTASecurityData	O	Specifies timestamp information, message sequence number, and security information.
privateData	CSTAPrivateData	O	Specifies non-standardized information.

25.1.6.2 Service Response

This service follows the atomic acknowledgement model for this service request.

25.1.6.2.1 Positive Acknowledgement

Table 25-13 Stop Data Collection —Positive Acknowledgement

Parameter Name	Type	M/ O/C	Description
security	CSTASecurityData	O	Specifies timestamp information, message sequence number, and security information.
privateData	CSTAPrivateData	O	Specifies non-standardized information.

25.1.6.2.2 Negative Acknowledgement

The negative acknowledgement error codes are described in 12.2.14, “ErrorValue”, on page 115.

25.1.6.3 Operational Model

25.1.6.3.1 Connection State Transitions

There are no connection state changes due to this service.

25.1.6.3.2 Device-Type Monitoring Event Sequences

There are no events generated as a result of this service.

25.1.6.3.3 Call-Type Monitoring Event Sequences

There are no events generated as a result of this service.

25.1.6.3.4 Functional Requirements

1. It is not necessary for a suspended data collection to be resumed for the data collection to be stopped.

© ISO/IEC 2007 – All rights reserved

Copyright International Organization for Standardization
Provided by IHS under license with ISO
No reproduction or networking permitted without license from IHS
Not for Resale

25.1.7 Suspend Data Collection

S ◄► C

The Suspend Data Collection suspends a specified data collection but does not destroy the data collection.

25.1.7.1 Service Request

Table 25-14 Suspend Data Collection —Service Request

Parameter Name	Type	M/ O/C	Description
dcollCrossRefID	DcollCrossRefID	M	Specifies the cross reference identifier associated with the data collection to be suspended.
security	CSTASecurityData	O	Specifies timestamp information, message sequence number, and security information.
privateData	CSTAPrivateData	O	Specifies non-standardized information.

25.1.7.2 Service Response

This service follows the atomic acknowledgement model for this service request.

25.1.7.2.1 Positive Acknowledgement

Table 25-15 Suspend Data Collection —Positive Acknowledgement

Parameter Name	Type	M/ O/C	Description
security	CSTASecurityData	O	Specifies timestamp information, message sequence number, and security information.
privateData	CSTAPrivateData	O	Specifies non-standardized information.

25.1.7.2.2 Negative Acknowledgement

The negative acknowledgement error codes are described in 12.2.14, “ErrorValue”, on page 115.

25.1.7.3 Operational Model

25.1.7.3.1 Connection State Transitions

There are no connection state changes due to this service.

25.1.7.3.2 Device-Type Monitoring Event Sequences

There are no events generated as a result of this service.

25.1.7.3.3 Call-Type Monitoring Event Sequences

There are no events generated as a result of this service.

25.1.7.3.4 Functional Requirements

1. The sender informs its peer that the data collection should be suspended, but not destroyed. The Resume Data Collection service may then be used to resume the flow of data on the data collection.
2. This service allows the consumer of the data collection to start and stop the flow of data. It is expected that no flow control of the data that has been suspended will occur. That is, if a data collection is

© ISO/IEC 2007 – All rights reserved
Copyright International Organization for Standardization
Provided by IHS under license with ISO
No reproduction or networking permitted without license from IHS
Not for Resale

suspended the consumer is not provided with the data between the time the data collection was suspended and the time it was resumed.

26 Voice Services & Events

This clause specifies Voice services and events[6].

26.1 Services

Table 26-1 Voice Services Summary

Voice Service	Description	Pg.
26.1.1 Activate	The Activate service enables a grammar rule to be considered in matching the speech of the call.	541
26.1.2 Clear	The Clear service halts operations and releases any data held by a Listener, DTMF, or Prompt Queue.	543
26.1.3 Concatenate Message	The Concatenate Message service combines multiple messages, in the sequence provided, into a single resulting message.	544
26.1.4 Deactivate	The Deactivate service excludes a grammar rule from being considered in matching the speech of a call.	545
26.1.5 Delete Message	The Delete Message service deletes a specified voice message.	546
26.1.6 Play Message	The Play Message service plays a voice message on a particular Connection.	547
26.1.7 Query Voice Attribute	The Query Voice Attribute obtains the current value of a specified voice attribute for a specified message.	549
26.1.8 Queue	The Queue service stores a copy of a Prompt to the Prompt Queue.	554
26.1.9 Record Message	The Record Message service starts recording a voice message from a specified connection.	555
26.1.10 Reposition	The Reposition service moves the current position pointer forward or backward a specified number of milliseconds in a message.	557
26.1.11 Resume	The Resume service restarts the playing or recording of a previously suspended message at its current position.	559
26.1.12 Review	The Review service plays a portion of a voice message during a recording session.	560
26.1.13 Set Voice Attribute	The Set Voice Attribute service sets a voice attribute for a specified connection and message.	562
26.1.14 Start	The Start service starts the interaction between a call and an interactive voice resource.	562
26.1.15 Stop	The Stop service halts the operation of a voice resource.	567
26.1.16 Suspend	The Suspend service temporarily stops the playing or recording of the current message and leaves the position pointer at its current location.	569
26.1.17 Synthesize Message	The Synthesize Message service constructs a voice message from a text message.	571

26.1.1 Activate

The Activate service enables a grammar rule to be considered in matching the speech of a call.

6) Voice services and events defined in this clause may alternatively be provided using media services and events as described in Clause 6.7.7, “Media Stream Access”, on page 75.

© ISO/IEC 2007 – All rights reserved

Copyright International Organization for Standardization
Provided by IHS under license with ISO
No reproduction or networking permitted without license from IHS
Not for Resale

26.1.1.1 Service Request

Table 26-2 Activate —Service Request

Parameter Name	Type	M/ O/C	Description
overConnection	ConnectionID	M	Specifies the connection for which grammar of the Listener is to be played.
resource	ResourceID	C	Specifies the interactive voice resource for this service. This parameter is required if there are multiple interactive voice resources per connection.
ruleName	Characters	M	Specifies the rule name of the grammar to be activated.
grammarName	Characters	O	Specifies the name of the grammar to be activated. If not specified, all of the grammars will be activated.
security	CSTASecurityData	O	Specifies timestamp information, message sequence number, and security information.
privateData	CSTAPrivateData	O	Specifies non-standardized information.

26.1.1.2 Service Response

This service follows the atomic acknowledgement model for this service request.

26.1.1.2.1 Positive Acknowledgement

Table 26-3 Activate—Positive Acknowledgement

Parameter Name	Type	M/ O/C	Description
security	CSTASecurityData	O	Specifies timestamp information, message sequence number, and security information.
privateData	CSTAPrivateData	O	Specifies non-standardized information.

26.1.1.2.2 Negative Acknowledgement

The negative acknowledgement error codes are described in 12.2.14, “ErrorValue”, on page 115.

26.1.1.3 Operational Model

Refer to Figure 6.1.1.4.8, “Generic Interactive Voice Device Category,” on page 31 for the operational model.

26.1.1.3.1 Connection State Transitions

There are no connection state changes due to this service.

For Interactive Voice Devices refer to for normative resource state transitions specified in Figure 6-17, Figure 6-18, and Figure 6-19 in Clause 6.1.1.4.8, “Generic Interactive Voice Device Category”, beginning on page 31.

26.1.1.3.2 Device-Type Monitoring Event Sequences

There are no events generated as a result of this service.

26.1.1.3.3 Call-Type Monitoring Event Sequence

There are no events generated as a result of this service.

© ISO/IEC 2007 – All rights reserved

Copyright International Organization for Standardization
Provided by IHS under license with ISO
No reproduction or networking permitted without license from IHS
Not for Resale

26.1.1.3.4 Functional Requirements

None.

26.1.2 Clear

The Clear service halts operations and releases any data held by a Listener, DTMF or Prompt Queue.

26.1.2.1 Service Request

Table 26-4 Clear —Service Request

Parameter Name	Type	M/ O/C	Description
overConnection	ConnectionID	M	Specifies the connection for which the operations and data held by a Listener, DTMF, or a Prompt Queue is to be cleared.
resource	ResourceID	C	Specifies the interactive voice resource for this service. This parameter is required if there are multiple interactive voice resources per connection.
security	CSTASecurityData	O	Specifies timestamp information, message sequence number, and security information.
privateData	CSTAPrivateData	O	Specifies non-standardized information.

26.1.2.2 Service Response

This service follows the atomic acknowledgement model for this service request.

26.1.2.2.1 Positive Acknowledgement

Table 26-5 Clear —Positive Acknowledgement

Parameter Name	Type	M/ O/C	Description
security	CSTASecurityData	O	Specifies timestamp information, message sequence number, and security information.
privateData	CSTAPrivateData	O	Specifies non-standardized information.

26.1.2.2.2 Negative Acknowledgement

The negative acknowledgement error codes are described in 12.2.14, “ErrorValue”, on page 115.

26.1.2.3 Operational Model

Refer to Figure 6.1.1.4.8, “Generic Interactive Voice Device Category,” on page 31 for the operational model.

26.1.2.3.1 Connection State Transitions

There are no connection state changes due to this service.

For Interactive Voice Devices refer to for normative resource state transitions specified in Figure 6-17, Figure 6-18, and Figure 6-19 in Clause 6.1.1.4.8, “Generic Interactive Voice Device Category”, beginning on page 31.

© ISO/IEC 2007 – All rights reserved

Copyright International Organization for Standardization
Provided by IHS under license with ISO
No reproduction or networking permitted without license from IHS
Not for Resale

26.1.2.3.2 Device-Type Monitoring Event Sequences

Table 26-6 Clear—Device-Type Monitoring Event Sequences

Monitored Device	Connection	Event	Event Cause
D1	D1C1 (overConnection)	Emptied	Normal

26.1.2.3.3 Call-Type Monitoring Event Sequences

Table 26-7 Clear—Call-Type Monitoring Event Sequences

Monitored Call	Connection	Event	Event Cause
C1	D1C1 (overConnection)	Emptied	Normal

26.1.2.3.4 Functional Requirements

None.

26.1.3 Concatenate Message

C → S

The Concatenate Message service combines multiple messages (original messages), in the sequence provided, into a single resulting message. The concatenated message consists of copies of the original messages. The concatenated message has a single set of attributes (e.g., coder, message ID). The original messages are neither deleted nor otherwise changed.

This Service provides a unique Message Identifier for the resulting (concatenated) message that shall remain valid until the resulting message is deleted.

26.1.3.1 Service Request

Table 26-8 Concatenate Message—Service Request

Parameter Name	Type	M/ O/C	Description
messagesToConcatenate	List of MessageID	M	Specifies the list of MessageIDs of the messages to be concatenated. The list shall contain at least two MessageIDs.
security	CSTASecurityData	O	Specifies timestamp information, message sequence number, and security information.
privateData	CSTAPrivateData	O	Specifies non-standardized information.

26.1.3.2 Service Response

This service follows the atomic acknowledgement model for this service request.

26.1.3.2.1 Positive Acknowledgement

Table 26-9 Concatenate Message—Positive Acknowledgement

Parameter Name	Type	M/ O/C	Description
concatenatedMessage	MessageID	M	Specifies the resulting Message Identifier.
security	CSTASecurityData	O	Specifies timestamp information, message sequence number, and security information.
privateData	CSTAPrivateData	O	Specifies non-standardized information.

© ISO/IEC 2007 – All rights reserved

Copyright International Organization for Standardization
Provided by IHS under license with ISO
No reproduction or networking permitted without license from IHS
Not for Resale

26.1.3.2.2 Negative Acknowledgement

The negative acknowledgement error codes are described in 12.2.14, “ErrorValue”, on page 115.

26.1.3.3 Operational Model

Refer to Figure 6-16, “Voice Unit Operational Model,” on page 30 for the operational model.

26.1.3.3.1 Connection State Transitions

There are no connection state changes due to this service.

26.1.3.3.2 Device-Type Monitoring Event Sequences

There are no events generated as a result of this service.

26.1.3.3.3 Call-Type Monitoring Event Sequences

There are no events generated as a result of this service.

26.1.3.3.4 Functional Requirements

1. The original messages are preserved by this function.
2. The Message Identifier of the resulting message returned by this service is valid until the resulting message is deleted.
3. If the Voice Unit is unable to concatenate the messages (e.g., because it is not possible to convert all of the original messages to a common encoding), the request shall be rejected.
4. The order of the original messages is preserved in the resulting concatenated message.

26.1.4 Deactivate

The Deactivate service excludes a grammar rule to be considered in matching the speech of a call.

26.1.4.1 Service Request

Table 26-10 Deactivate —Service Request

Parameter Name	Type	M/ O/C	Description
overConnection	ConnectionID	M	Specifies the connection for which grammar of the Listener is to be deactivated.
resource	ResourceID	C	Specifies the interactive voice resource for this service. This parameter is required if there are multiple interactive voice resources per connection.
ruleName	Characters	M	Specifies the rule name of the grammar to be deactivated.
grammarName	Characters	O	Specifies the name of the grammar to be deactivated. If not specified, all of the grammars will be affected.
security	CSTASecurityData	O	Specifies timestamp information, message sequence number, and security information.
privateData	CSTAPrivateData	O	Specifies non-standardized information.

© ISO/IEC 2007 – All rights reserved

Copyright International Organization for Standardization
Provided by IHS under license with ISO
No reproduction or networking permitted without license from IHS
Not for Resale

26.1.4.2 Service Response

This service follows the atomic acknowledgement model for this service request.

26.1.4.2.1 Positive Acknowledgement

Table 26-11 Deactivate—Positive Acknowledgement

Parameter Name	Type	M/ O/C	Description
security	CSTASecurityData	O	Specifies timestamp information, message sequence number, and security information.
privateData	CSTAPrivateData	O	Specifies non-standardized information.

26.1.4.2.2 Negative Acknowledgement

The negative acknowledgement error codes are described in 12.2.14, “ErrorValue”, on page 115.

26.1.4.3 Operational Model

Refer to Figure 6.1.1.4.8, “Generic Interactive Voice Device Category,” on page 31 for the operational model.

26.1.4.3.1 Connection State Transitions

There are no connection state changes due to this service.

26.1.4.3.2 Device-Type Monitoring Event Sequences

There are no events generated as a result of this service.

26.1.4.3.3 Call-Type Monitoring Event Sequences

There are no events generated as a result of this service.

26.1.4.3.4 Functional Requirements

None.

26.1.5 Delete Message

C ⟶ S

The Delete Message service deletes a specified message.

26.1.5.1 Service Request

Table 26-12 Delete Message—Service Request

Parameter Name	Type	M/ O/C	Description
messageToBeDeleted	MessageID	M	Specifies the message to be deleted.
security	CSTASecurityData	O	Specifies timestamp information, message sequence number, and security information.
privateData	CSTAPrivateData	O	Specifies non-standardized information.

© ISO/IEC 2007 – All rights reserved
Copyright International Organization for Standardization
Provided by IHS under license with ISO
No reproduction or networking permitted without license from IHS
Not for Resale

26.1.5.2 Service Response

This service follows the atomic acknowledgement model for this service request.

26.1.5.2.1 Positive Acknowledgement

Table 26-13 Delete Message—Positive Acknowledgement

Parameter Name	Type	M/ O/C	Description
security	CSTASecurityData	O	Specifies timestamp information, message sequence number, and security information.
privateData	CSTAPrivateData	O	Specifies non-standardized information.

26.1.5.2.2 Negative Acknowledgement

The negative acknowledgement error codes are described in 12.2.14, “ErrorValue”, on page 115.

26.1.5.3 Operational Model

26.1.5.3.1 Connection State Transitions

There are no connection state changes due to this service.

26.1.5.3.2 Device-Type Monitoring Event Sequences

There are no events generated as a result of this service.

26.1.5.3.3 Call-Type Monitoring Event Sequences

There are no events generated as a result of this service.

26.1.5.3.4 Functional Requirements

None.

26.1.6 Play Message

C ⟶ S

The Play Message service plays a voice message on a particular connection.

The service may also specify termination conditions, which if encountered, causes message playback to stop.

26.1.6.1 Service Request

Table 26-14 Play Message—Service Request

Parameter Name	Type	M/ O/C	Description
messageToBePlayed	MessageID	M	Specifies the message to be played.
overConnection	ConnectionID	M	Specifies the connection on which the message is to be played.
duration	Value	O	Specifies the length of time to play the message (in milliseconds).

© ISO/IEC 2007 – All rights reserved

Copyright International Organization for Standardization
Provided by IHS under license with ISO
No reproduction or networking permitted without license from IHS
Not for Resale

Table 26-14 Play Message—Service Request (continued)

Parameter Name	Type	M/ O/C	Description
termination	Bitmap	O	Specifies the list of conditions that cause the playback to terminate. This may include one or more of the following actions: • duration exceeded (this value can only be provided if the duration parameter is provided) • DTMF digit (external to the message being played) detected • end of message detected • speech (external to the message being played) detected
security	CSTASecurityData	O	Specifies timestamp information, message sequence number, and security information.
privateData	CSTAPrivateData	O	Specifies non-standardized information.

26.1.6.2 Service Response

This service follows the atomic acknowledgement model for this service request.

26.1.6.2.1 Positive Acknowledgement

Table 26-15 Play Message—Positive Acknowledgement

Parameter Name	Type	M/ O/C	Description
security	CSTASecurityData	O	Specifies timestamp information, message sequence number, and security information.
privateData	CSTAPrivateData	O	Specifies non-standardized information.

26.1.6.2.2 Negative Acknowledgement

The negative acknowledgement error codes are described in 12.2.14, “ErrorValue”, on page 115.

26.1.6.3 Operational Model

Refer to Figure 6-16, “Voice Unit Operational Model,” on page 30 for the operational model.

26.1.6.3.1 Connection State Transitions

There are no connection state changes due to this service.

26.1.6.3.2 Device-Type Monitoring Event Sequences

Table 26-16 Play Message—Device-Type Monitoring Event Sequences

Monitored Device	Connection	Event	Event Cause
D1	D1C1 (overConnection)	Play	Normal

--`,,```,,,,````-`-`,,`,,`,`,,`---
© ISO/IEC 2007 – All rights reserved
Copyright International Organization for Standardization
Provided by IHS under license with ISO
No reproduction or networking permitted without license from IHS
Not for Resale

26.1.6.3.3 Call-Type Monitoring Event Sequences

Table 26-17 Play Message—Call-Type Monitoring Event Sequences

Monitored Call	Connection	Event	Event Cause
C1	D1C1 (overConnection)	Play	Normal

26.1.6.3.4 Functional Requirements

1. The Play Message service plays a designated message until the reception of a valid Stop service request or a Suspend service request or until the end of the message or other specified termination condition is detected.
2. If the duration parameter is set to zero, then the message will go immediately to the Suspend Play State.
3. This service may provide media conversion (as indicated be the capability exchange services).
4. It is implementation dependent if only one message can be played on a connection at one time. When multiple messages are played at one time, the audio shall be mixed.
5. If a message on a given connection is suspended, the Play service (for the same message) shall be rejected.

26.1.7 Query Voice Attribute

C ⟶ S

The Query Voice Attribute service obtains the attribute for a specified connection and message in the Voice Unit, or the operating parameters for a specified connection or Interractive Voice device.

To query the global voice attributes for an Interactive Voice Device, the callID portion of the connectionID can be omitted.

The attributes that can be queried depend on the device type as defined below.

26.1.7.1 Service Request

Table 26-18 Query Voice Attribute—Service Request

Parameter Name	Type	M/ O/C	Description
messageToQuery	MessageID	C	Specifies the message whose attribute is to be queried. This parameter is required if the voice attribute pertains to a message.
resource	ResourceID	C	Specifies the interactive voice resource for this service. This parameter is required if there are multiple interactive voice resources per connection.

© ISO/IEC 2007 – All rights reserved

Copyright International Organization for Standardization
Provided by IHS under license with ISO
No reproduction or networking permitted without license from IHS
Not for Resale

Table 26-18 Query Voice Attribute—Service Request (continued)

Parameter Name	Type	M/ O/C	Description
attributeToQuery	Enumerated	M	Specifies the attribute to be queried. The complete set of possible values is: • encoding algorithm - requests the encoding algorithm used for the specified message (for Voice Unit) • sampling rate - requests the sampling rate used for the specified message (for Voice Unit) • duration - requests the duration (in milliseconds) of the specified message (for Voice Unit) • file name - requests the (implementation-specific) name of the specified message (for Voice Unit) • current position* - requests the value of the position pointer (in milliseconds after the beginning of the message) (for Voice Unit) • current speed* - requests the current playing speed of the specified message (for Voice Unit, Prompt Queue) • current volume* - requests the current playing volume of the specified message (for Voice Unit, Prompt Queue) • current level* - requests the current recording level of the specified message (for Voice Unit) • current state* - requests the current state of the specified message. (for Voice Unit) • grammars - requests a list of grammars currently used to process speech or DTMF inputs (for Listener, DTMF) • language - requests the languages(s) the Listener is capable of processing, or the language the Prompt is currently using (for Listener, Prompt) • mode - requests the operation mode (6.1.1.4.8) (for Listener) • retain audio - requests the boolean flag indicating whether the audio is being recorded (for Listener) • silence timeout - requests the timeout value in milliseconds that will causes Silence Timeout expiration (for Listener, DTMF) • max timeout - requests the value in milliseconds that will cause Max Timeout expiration (for Voice Unit, Listener, Prompt, DTMF, Prompt Queue) • babble timeout - requests the value in milliseconds that will cause Babble Timeout expiration (for Listener) • end silence - requests the period in milliseconds for which the Listener will observe as an end of utterance marker or for which the DTMF will observe as end of input marker (for Listener, DTMF) • rejection threshold - requests the value below which the Listener will raise the outcome under the Not Recognized as opposed to the Recognized Event.(for Listener)

© ISO/IEC 2007 – All rights reserved

Copyright International Organization for Standardization
Provided by IHS under license with ISO
No reproduction or networking permitted without license from IHS

Not for Resale

Table 26-18 Query Voice Attribute—Service Request (continued)

Parameter Name	Type	M/ O/C	Description
attribute to query (continued)			• auto interruptible - requests the boolean flag indicating whether the prompt will be automatically stopped by the activity of a Listener or a DTMF resource (for Prompt) • inner XML - requests the Speech Synthesis Markup Language document the Prompt is rendering (for Prompt) • inter-digit timeout - requests the timeout value in milliseconds that will cause inter-digit timeout expiration (for DTMF) • preflush - request the boolean flag indicating whether DTMF will always clear up its buffer before interaction starts (for DTMF)
connection	ConnectionID	C	Specifies the connection of the message/resource whose attribute is being queried. This parameter is required if the voice attribute pertains to an Interactive Voice Device.
security	CSTASecurityData	O	Specifies timestamp information, message sequence number, and security information.
privateData	CSTAPrivateData	O	Specifies non-standardized information.

26.1.7.2 Service Response

This service follows the atomic acknowledgement model for this service request.

© ISO/IEC 2007 – All rights reserved

Copyright International Organization for Standardization
Provided by IHS under license with ISO
No reproduction or networking permitted without license from IHS
Not for Resale

26.1.7.2.1 Positive Acknowledgement

Table 26-19 Query Voice Attribute—Positive Acknowledgement

Parameter Name	Type	M/ O/C	Description

attribute	Choice Structure	M	Specifies the value of the specified attribute. May be one of the following (choice depends upon the attribute specified in the service request):
			• encodingAlgorithm (Enumerated) - encoding algorithm used for the specified message (for Voice Unit). The complete set of possible values is:
			  • ADPCM6K
			  • ADPCM8K
			  • muLawPCM6k
			  • aLawPCM6K
			• samplingRate (Value) used for the specified message (for Voice Unit)
			• duration (Value) in milliseconds of the specified message (for Voice Unit)
			• filename (Characters) implementation specific name of the specified message (for Voice Unit)
			• currentPosition (Value) in the message (milliseconds from the beginning of the message) (for Voice Unit)
			• currentSpeed (Value) of the message (represents the percentage of normal speed, with 100% being normal speed and the slowest reportable speed being 1%) (for Voice Unit, Prompt Queue) (for Voice Unit)
			• currentVolAbs (Value 0..100) - absolute play volume of the message (100 indicating maximum volume and 0 indicating silence) (for Voice Unit, Prompt Queue)
			• currentGain (Value 0..100) gain at which the message was recorded (100 indicating maximum level and 0 indicating minimum level) (for Voice Unit)
			• current state (Enumerated) - a voice resource state. The complete set of possible states (see 6.1.1.4.7 through 6.1.1.4.13 for a description of the states) is:
			  • formed
			  • dtmf detected
			  • null
			  • play
			  • playing
			  • ready
			  • record
			  • review
			  • speech detected
			  • started
			  • stop
			  • suspend play
			  • suspend record

© ISO/IEC 2007 – All rights reserved
Copyright International Organization for Standardization
Provided by IHS under license with ISO
No reproduction or networking permitted without license from IHS
Not for Resale

Table 26-19 Query Voice Attribute—Positive Acknowledgement (continued)

Parameter Name	Type	M/ O/C	Description

(attribute continued)			• grammars (Characters) - a list of grammars in URI currently used to process speech or DTMF inputs (for Listener, DTMF, Prompt Queue)
			• language (Characters) - the languages(s) in XML:LANG format the Listener is capable of processing, or the language the Prompt is currently using (for Listener, Prompt)
			• mode (Enumerated) - the operation mode (for Listener). The complete set of possible values is:
			  • automatic
			  • single
			  • multiple
			• retain audio (Boolean) - boolean flag indicating whether the audio is being recorded (for Listener)
			• silence timeout (Value) - the timeout value in milliseconds that will cause Silence Timeout expiration (for Listener, DTMF)
			• max timeout (Value) - the value in milliseconds that will cause Max Timeout expiration (for Voice Unit, Listener, Prompt, DTMF, Prompt Queue)
			• babble timeout: (Value) - the value in milliseconds that will cause Babble Timeout expiration (for Listener)
			• end silence (Value) - the period in milliseconds for which the Listener will observe as an end of utterance marker or for which the DTMF will observe as end of input marker (for Listener, DTMF)
			• rejection threshold (Value) - the value below which the Listener will raise the outcome under the Not Recognized as opposed to the Recognized Event (for Listener)
			• auto interruptible (Boolean)- the boolean flag indicating whether the prompt will be automatically stopped by the activity of a Listener or a DTMF resource (for Prompt)
			• inner XML (Characters) - the Speech Synthesis Markup Language document the Prompt is rendering (for Prompt)
			• inter-digit timeout (Value) - timeout value in milliseconds that will cause inter-digit timeout expiration (for DTMF)
			• preflush (Boolean) - the boolean flag indicating whether DTMF will always clear up its buffer before interaction starts

security	CSTASecurityData	O	Specifies timestamp information, message sequence number, and security information.
privateData	CSTAPrivateData	O	Specifies non-standardized information.

26.1.7.2.2 Negative Acknowledgement

The negative acknowledgement error codes are described in 12.2.14, “ErrorValue”, on page 115.

© ISO/IEC 2007 – All rights reserved

Copyright International Organization for Standardization
Provided by IHS under license with ISO
No reproduction or networking permitted without license from IHS
Not for Resale

26.1.7.3 Operational Model

26.1.7.3.1 Connection State Transitions

There are no connection state changes due to this service.

26.1.7.3.2 Device-Type Monitoring Event Sequences

There are no events generated as a result of this service.

26.1.7.3.3 Call-Type Monitoring Event Sequences

There are no events generated as a result of this service.

26.1.8 Queue

The Queue service generates the voice of a prompt and stores the copy to the Prompt Queue.

26.1.8.1 Service Request

Table 26-20 Queue —Service Request

Parameter Name	Type	M/ O/C	Description
overConnection	ConnectionID	M	Specifies the connection for which the voice of the Prompt is to be generated.
message	MessageID	C	Specifies the message to be queued to the Prompt Queue. This parameter is required if the voice attribute pertains to a message.
resource	ResourceID	C	Specifies the interactive voice resource for this service. This parameter is required if there are multiple interactive voice resources per connection.
text	Characters	O	Specifies the text to be synthesized and stored on the Prompt Queue.
security	CSTASecurityData	O	Specifies timestamp information, message sequence number, and security information.
privateData	CSTAPrivateData	O	Specifies non-standardized information.

26.1.8.2 Service Response

This service follows the atomic acknowledgement model for this service request.

26.1.8.2.1 Positive Acknowledgement

Table 26-21 Queue—Positive Acknowledgement

Parameter Name	Type	M/ O/C	Description
security	CSTASecurityData	O	Specifies timestamp information, message sequence number, and security information.
privateData	CSTAPrivateData	O	Specifies non-standardized information.

© ISO/IEC 2007 – All rights reserved

Copyright International Organization for Standardization
Provided by IHS under license with ISO
No reproduction or networking permitted without license from IHS
Not for Resale

26.1.8.2.2 Negative Acknowledgement

The negative acknowledgement error codes are described in 12.2.14, “ErrorValue”, on page 115.

26.1.8.3 Operational Model

Refer to Figure 6.1.1.4.8, “Generic Interactive Voice Device Category,” on page 31 for the operational model.

26.1.8.3.1 Connection State Transitions

There are no connection state changes due to this service.

For Interactive Voice Devices refer to for normative resource state transitions specified in Figure 6-17, Figure 6-18, and Figure 6-19 in Clause 6.1.1.4.8, “Generic Interactive Voice Device Category”, beginning on page 31.

26.1.8.3.2 Device-Type Monitoring Event Sequences

Table 26-22 Queue —Device-Type Monitoring Event Sequences

Monitored Device	Connection	Event	Event Cause
D1	D1C1 (overConnection)	Started*	Normal
		Voice Error Occurred*	BadVoice, BadURI

*Note that only one event will be generated.

26.1.8.3.3 Call-Type Monitoring Event Sequences

Table 26-23 Queue Message—Call-Type Monitoring Event Sequences

Monitored Call	Connection	Event	Event Cause
C1	D1C1 (overConnection)	Started*	Normal
		Voice Error Occurred*	BadVoice, BadURI

*Note that only one event will be generated.

26.1.8.3.4 Functional Requirements

None.

26.1.9 Record Message

C → S

The Record Message service starts recording a new message from a specified connection.

This service provides a message identifier for the resulting message.

26.1.9.1 Service Request

Table 26-24 Record Message—Service Request

Parameter Name	Type	M/ O/C	Description
callToBeRecorded	ConnectionID	M	Specifies the connection from which the message is to recorded.

© ISO/IEC 2007 – All rights reserved

Copyright International Organization for Standardization
Provided by IHS under license with ISO
No reproduction or networking permitted without license from IHS
Not for Resale

Table 26-24 Record Message—Service Request (continued)

Parameter Name	Type	M/ O/C	Description
resource	ResourceID	C	Specifies the interactive voice resource for this service. This parameter is required if there are multiple interactive voice resources per connection.
samplingRate	Value	O	Specifies the sampling rate to be used for recording.
encodingAlgorithm	Enumerated	O	Specifies the encoding algorithm to be used for recording. The complete set of possible values is: • ADPCM6K • ADPCM8K • muLawPCM6k • aLawPCM6K
maxDuration	Value	O	Specifies the maximum message time to record (in milliseconds).
termination	Bitmap	O	Specifies the list of actions that causes the recording to terminate. This may include one or more of the following actions: • duration exceeded • DTMF digit detected • end of data detected • speech detected
security	CSTASecurityData	O	Specifies timestamp information, message sequence number, and security information.
privateData	CSTAPrivateData	O	Specifies non-standardized information.

26.1.9.2 Service Response

This service follows the atomic acknowledgement model for this service request.

26.1.9.2.1 Positive Acknowledgement

Table 26-25 Record Message—Positive Acknowledgement

Parameter Name	Type	M/ O/C	Description
resultingMessage	MessageID	M	Specifies the resulting Message Identifier.
security	CSTASecurityData	O	Specifies timestamp information, message sequence number, and security information.
privateData	CSTAPrivateData	O	Specifies non-standardized information.

26.1.9.2.2 Negative Acknowledgement

The negative acknowledgement error codes are described in 12.2.14, “ErrorValue”, on page 115.

26.1.9.3 Operational Model

Refer to Figure 6-16, “Voice Unit Operational Model,” on page 30 for the operational model.

26.1.9.3.1 Connection State Transitions

There are no connection state changes due to this service.

© ISO/IEC 2007 – All rights reserved

Copyright International Organization for Standardization
Provided by IHS under license with ISO
No reproduction or networking permitted without license from IHS
Not for Resale

26.1.9.3.2 Device-Type Monitoring Event Sequences

Table 26-26 Record Message—Device-Type Monitoring Event Sequences

Monitored Device	Connection	Event	Event Cause
D1	D1C1 (callToBeRecorded)	Record	Normal

26.1.9.3.3 Call-Type Monitoring Event Sequences

Table 26-27 Record Message—Call-Type Monitoring Event Sequences

Monitored Call	Connection	Event	Event Cause
C1	D1C1 (callToBeRecorded)	Record	Normal

26.1.9.3.4 Functional Requirements

1. If the sampling rate or encoding algorithm are not specified or cannot be provided, then the Voice Unit may use its default sampling rate and/or encoding algorithm.

26.1.10 Reposition

C ⟶ S

The Reposition Service changes the flow of voice play back.

- For Voice Unit, the service move the position pointer forward or backward a specified number of milliseconds in a message.
- For Prompt Queue, the service changes the playing prompts within the frontmost subqueue, moving back or forward a specified number of prompts in the subqueue. Note that the subqueue must be in the Playing state for repositioning.

26.1.10.1 Service Request

Table 26-28 Reposition—Service Request

Parameter Name	Type	M/ O/C	Description
connection	ConnectionID	M	Specifies the connection on which the message is to be repositioned.
messageToReposition	MessageID	C	Specifies the message whose pointer is to be repositioned. This parameter is mandatory if there are multiple active messages on the specified connection, otherwise the parameter is optional. If this parameter is not provided and the service pertains to a message, the service applies to the currently active message on the specified connection.
resource	ResourceID	C	Specifies the interactive voice resource for this service. This parameter is required if there are multiple interactive voice resources per connection.

© ISO/IEC 2007 – All rights reserved

Copyright International Organization for Standardization
Provided by IHS under license with ISO
No reproduction or networking permitted without license from IHS
Not for Resale

Table 26-28 Reposition—Service Request (continued)

Parameter Name	Type	M/ O/C	Description
periodOfReposition	Choice Structure	M	Specifies how the pointer should be repositioned. This shall be one of the following choices: • start of message/subqueue • end of message/subqueue • relative position from current pointer (Value) - a positive value moves the message pointer forward (toward the end of the message), a negative value moves the message pointer backward (towards the beginning of the message). For Prompt Queue, the value is capped by the boundaries of the subqueue.
security	CSTASecurityData	O	Specifies timestamp information, message sequence number, and security information.
privateData	CSTAPrivateData	O	Specifies non-standardized information.

26.1.10.2 Service Response

This service follows the atomic acknowledgement model for this service request.

26.1.10.2.1 Positive Acknowledgement

Table 26-29 Reposition—Positive Acknowledgement

Parameter Name	Type	M/ O/C	Description
security	CSTASecurityData	O	Specifies timestamp information, message sequence number, and security information.
privateData	CSTAPrivateData	O	Specifies non-standardized information.

26.1.10.2.2 Negative Acknowledgement

The negative acknowledgement error codes are described in 12.2.14, “ErrorValue”, on page 115.

26.1.10.3 Operational Model

Refer to Figure 6-16, “Voice Unit Operational Model,” on page 30 for the operational model.

26.1.10.3.1 Connection State Transitions

There are no connection state changes due to this service.

26.1.10.3.2 Device-Type Monitoring Event Sequences

There are no events generated as a result of this service.

26.1.10.3.3 Call-Type Monitoring Event Sequences

There are no events generated as a result of this service.

© ISO/IEC 2007 – All rights reserved

Copyright International Organization for Standardization
Provided by IHS under license with ISO
No reproduction or networking permitted without license from IHS
Not for Resale

26.1.10.3.4 Functional Requirements

1. Moving forward and backward within the indicated message on the indicated connection is accomplished by using positive or negative values for the period, respectively.
2. An attempt to move backward beyond the beginning of a message moves to the start of the message. An attempt to move forward beyond the end of the message moves to the end of the message.

26.1.11 Resume

C ⟶ S

The Resume Service resumes a voice resource.

- For a message, the Resume Service restarts the playing or recording of a previously suspended message at the current position in the Voice Unit.
- For Prompt Queue, the Resume Service the playing of a previously suspended prompt.

26.1.11.1 Service Request

Table 26-30 Resume—Service Request

Parameter Name	Type	M/ O/C	Description
connection	ConnectionID	M	Specifies the connection on which the message is to be resumed.
messageToResume	MessageID	C	Specifies the message to be resumed. This parameter is mandatory if there are multiple suspended messages on the specified connection, otherwise the parameter is optional. If this parameter is not provided and the service applies to a message, the service applies to the currently suspended message on the specified connection.
resource	ResourceID	C	Specifies the interactive voice resource for this service. This parameter is required if there are multiple interactive voice resources per connection.
duration	Value	O	Specifies the length of time for playback or recording (in milliseconds).
security	CSTASecurityData	O	Specifies timestamp information, message sequence number, and security information.
privateData	CSTAPrivateData	O	Specifies non-standardized information.

26.1.11.2 Service Response

This service follows the atomic acknowledgement model for this service request.

26.1.11.2.1 Positive Acknowledgement

Table 26-31 Resume—Positive Acknowledgement

Parameter Name	Type	M/ O/C	Description
security	CSTASecurityData	O	Specifies timestamp information, message sequence number, and security information.
privateData	CSTAPrivateData	O	Specifies non-standardized information.

© ISO/IEC 2007 – All rights reserved

Copyright International Organization for Standardization
Provided by IHS under license with ISO
No reproduction or networking permitted without license from IHS
Not for Resale

26.1.11.2.2 Negative Acknowledgement

The negative acknowledgement error codes are described in 12.2.14, “ErrorValue”, on page 115.

26.1.11.3 Operational Model

Refer to Figure 6-16, “Voice Unit Operational Model,” on page 30 for the operational model of the Voice Unit, or Figure 6-19, “Operational Model of a subqueue in a Prompt Queue Resource,” on page 36 for the operational model of Prompt Queue.

26.1.11.3.1 Connection State Transitions

There are no connection state changes due to this service.

26.1.11.3.2 Device-Type Monitoring Event Sequences

There are no events generated as a result of this service.

26.1.11.3.3 Call-Type Monitoring Event Sequences

There are no events generated as a result of this service.

26.1.11.3.4 Functional Requirements

1. The position pointer in the message may have been changed by using the Reposition service.

26.1.12 Review

C ⟶ S

The Review service plays a portion of a voice message during a recording session, until either the end of the portion is reached or a Suspend service request is issued. When this service completes, the position reached becomes the value of the position pointer.

This service does not affect the current position unless a suspend occurs before the review completes.

26.1.12.1 Service Request

Table 26-32 Review—Service Request

Parameter Name	Type	M/ O/C	Description
connection	ConnectionID	M	Specifies the connection on which the message is to be reviewed.
messageToReview	MessageID	C	Specifies the message to be reviewed. This parameter is mandatory if there are multiple active messages on the specified connection, otherwise the parameter is optional. If this parameter is not provided and the service pertains to a message, the service applies to the currently active message on the specified connection.
resource	ResourceID	C	Specifies the interactive voice resource for this service. This parameter is required if there are multiple interactive voice resources per connection.

© ISO/IEC 2007 – All rights reserved

Copyright International Organization for Standardization
Provided by IHS under license with ISO
No reproduction or networking permitted without license from IHS
Not for Resale

Table 26-32 Review—Service Request (continued)

Parameter Name	Type	M/ O/C	Description
periodToReview	Choice Structure	M	Specifies the length of the message to be reviewed. This shall be one of the following choices: • start of message - specifies that the message shall be reviewed from the beginning of the message. • length of review (Value) - specifies the length in milliseconds that the message pointer should be moved towards the beginning of the message before being reviewed.
security	CSTASecurityData	O	Specifies timestamp information, message sequence number, and security information.
privateData	CSTAPrivateData	O	Specifies non-standardized information.

26.1.12.2 Service Response

This service follows the atomic acknowledgement model for this service request.

26.1.12.2.1 Positive Acknowledgement

Table 26-33 Review—Positive Acknowledgement

Parameter Name	Type	M/ O/C	Description
security	CSTASecurityData	O	Specifies timestamp information, message sequence number, and security information.
privateData	CSTAPrivateData	O	Specifies non-standardized information.

26.1.12.2.2 Negative Acknowledgement

The negative acknowledgement error codes are described in 12.2.14, “ErrorValue”, on page 115.

26.1.12.3 Operational Model

Refer to Figure 6-16, “Voice Unit Operational Model,” on page 30 for the operational model.

26.1.12.3.1 Connection State Transitions

There are no connection state changes due to this service.

26.1.12.3.2 Device-Type Monitoring Event Sequences

Table 26-34 Review Message—Device-Type Monitoring Event Sequences

Monitored Device	Connection	Event	Event Cause
D1	D1C1 (connection)	Review	Normal

26.1.12.3.3 Call-Type Monitoring Event Sequences

Table 26-35 Review —Call-Type Monitoring Event Sequences

Monitored Call	Connection	Event	Event Cause
C1	D1C1 (connection)	Review	Normal

© ISO/IEC 2007 – All rights reserved

--`,,```,,,,````-`-`,,`,,`,`,,`---
Copyright International Organization for Standardization
Provided by IHS under license with ISO
No reproduction or networking permitted without license from IHS
Not for Resale

26.1.12.3.4 Functional Requirements

1. The Review service cannot be issued while the Voice Unit is already in the Review state.

26.1.13 Set Voice Attribute C → S

The Set Voice Attribute service sets the voice attribute for a specified connection and message/resource.

To set the global attributes for a specific device, the callID portion of the connectionID can be omitted. The global attributes for a device will be overwritten by consequent Set Voice Attributes with a fully specified connection D.

The voice attributes that can be set vary by the device type as specified below.

26.1.13.1 Service Request

Table 26-36 Set Voice Attribute—Service Request

Parameter Name	Type	M/ O/C	Description
connection	ConnectionID	M	Specifies the Connection on which the voice attribute should be set. To set a global attribute for a device, the callID portion of the connectionID can be omitted.
message	MessageID	C	Specifies the message whose voice attribute is to be set. This parameter is mandatory if there are multiple active messages on the specified connection, otherwise the parameter is optional. If this parameter is not provided and the service applies to a message, then the service applies to the currently active message on the specified connection.
resource	ResourceID	C	Specifies the interactive voice resource for this service. This parameter is required if there are multiple interactive voice resources per connection.

© ISO/IEC 2007 – All rights reserved

Copyright International Organization for Standardization
Provided by IHS under license with ISO
No reproduction or networking permitted without license from IHS
Not for Resale

Table 26-36 Set Voice Attribute—Service Request (continued)

Parameter Name	Type	M/ O/C	Description

attributeToSet	Choice Structure	M	Specifies the attribute to be set. This shall be one of the following choices:
			• currentSpeed (Value) - sets the playing speed of the message (represents the percentage of normal speed, with 100% being normal speed and the slowest reportable speed being 1%) (for message, prompt queue)
			• currentVolume (Choice Structure) - sets the playing volume of the message. May specify either an absolute value or may specify that the volume should be incremented or decremented by a implementation specified increment. It may be one of the following possible choices (for message, prompt queue):
			  • currentVolAbs (Value) - Specifies a value from 0 through 100. 0 indicates silence, and 100 indicates maximum volume. The granularity and quantization of the values 1 though 99 are device specific
			  • currentVolInc (Enumerated) - Specifies if the volume is to be incremented or decremented by a switch specified amount. The complete set of possible values is: increment - the volume is incremented or decrement - the volume is decremented.
			• currentGain (Value 0..100) - sets the recording gain of the message (100 indicating maximum level and 0 indicating minimum level) (for message)
			• grammars (Characters) - sets a list of grammars currently used to process speech or DTMF inputs (for Listener, DTMF)
			• language (Characters) - sets the languages(s) the Listener is capable of processing, or the language the Prompt is currently using (for Listener, Prompt)

© ISO/IEC 2007 – All rights reserved

Copyright International Organization for Standardization
Provided by IHS under license with ISO
No reproduction or networking permitted without license from IHS
Not for Resale

Table 26-36 Set Voice Attribute—Service Request (continued)

Parameter Name	Type	M/ O/C	Description

attributeToSet (continued)			• mode (Enumerated) - sets the operation mode (6.1.1.4.8). The possible choices are: (for Listener)
			  • automatic
			  • single
			  • multiple
			• retain audio (Boolean) - sets the boolean flag indicating whether the audio is being recorded (for Listener)
			• silence timeout (Value) - sets the timeout value in milliseconds that will causes Silence Timeout expiration (for Listener, DTMF)
			• max timeout (Value) - sets the value in milliseconds that will cause Max Timeout expiration (for Voice Unit, Listener)
			• babble timeout (Value) - sets the value in milliseconds that will cause Babble Timeout expiration (for Listener)
			• end silence (Value) - sets the period in milliseconds for which the Listener will observe as an end of utterance marker or for which the DTMF will observe as end of input marker (for Listener, DTMF)
			• rejection threshold (Value) - sets the value below which the Listener will raise the outcome under the Not Recognized as opposed to the Recognized Event.(for Listener)
			• auto interruptible (Boolean) - sets the boolean flag indicating whether the prompt will be automatically stopped by the activity of a Listener or a DTMF resource (for Prompt)
			• inner XML (Characters) - sets the Speech Synthesis Markup Language document the Prompt is rendering (for Prompt)
			• inter-digit timeout (Value) - sets the timeout value in milliseconds that will cause inter-digit timeout expiration (for DTMF)
			• preflush (Boolean) - sets the boolean flag indicating whether DTMF will always clear up its buffer before interaction starts (for DTMF)

security	CSTASecurityData	O	Specifies timestamp information, message sequence number, and security information.
privateData	CSTAPrivateData	O	Specifies non-standardized information.

26.1.13.2 Service Response

This service follows the atomic acknowledgement model for this service request.

26.1.13.2.1 Positive Acknowledgement

Table 26-37 Set Voice Attribute—Positive Acknowledgement

Parameter Name	Type	M/ O/C	Description
security	CSTASecurityData	O	Specifies timestamp information, message sequence number, and security information.
privateData	CSTAPrivateData	O	Specifies non-standardized information.

--`,,```,,,,````-`-`,,`,,`,`,,`---
© ISO/IEC 2007 – All rights reserved
Copyright International Organization for Standardization
Provided by IHS under license with ISO
No reproduction or networking permitted without license from IHS
Not for Resale

26.1.13.2.2 Negative Acknowledgement

The negative acknowledgement error codes are described in 12.2.14, “ErrorValue”, on page 115.

26.1.13.3 Operational Model

26.1.13.3.1 Connection State Transitions

There are no connection state changes due to this service.

26.1.13.3.2 Device-Type Monitoring Event Sequences

Table 26-38 Set Voice Attribute —Device-Type Monitoring Event Sequences

Monitored Device	Connection	Event	Event Cause
D1	D1C1 (connection)	Voice Attribute Changed	Normal

26.1.13.3.3 Call-Type Monitoring Event Sequences

Table 26-39 Set Voice Attribute —Call-Type Monitoring Event Sequences

Monitored Call	Connection	Event	Event Cause
C1	D1C1 (connection)	Voice Attribute Changed	Normal

26.1.13.3.4 Functional Requirements

1. This service can only be used to set one attribute per service request. If multiple attributes need to be set for the same message, multiple service requests shall be used.

26.1.14 Start

The Start service initiates the interaction between a call and an Interactive Voice resource.

The service induces the input processing device, such as Listener or DTMF, to transition out of the Null State. For Prompt Queue, the service causes the first prompt subqueue that is not in the Playing State to transition to the Ready State. For Prompt, the service causes the voice of the Prompt to be generated and, if used with Prompt Queue, be queued to the Prompt Queue, and the hosting subqueue to transition to the Ready State.

26.1.14.1 Service Request

Table 26-40 Start —Service Request

Parameter Name	Type	M/ O/C	Description
overConnection	ConnectionID	M	Specifies the connection for which the interaction is to be started.
resource	ResourceID	C	Specifies the interactive voice resource for this service. This parameter is required if there are multiple interactive voice resources per connection.
text	Character	O	Specifies, for the Prompt or Prompt Queue only, the text to be synthesized and played, and for Listener or DTMF, the text to be parsed by the grammar.
security	CSTASecurityData	O	Specifies timestamp information, message sequence number, and security information.
privateData	CSTAPrivateData	O	Specifies non-standardized information.

© ISO/IEC 2007 – All rights reserved

Copyright International Organization for Standardization
Provided by IHS under license with ISO
No reproduction or networking permitted without license from IHS
Not for Resale

26.1.14.2 Service Response

This service follows the atomic acknowledgement model for this service request.

26.1.14.2.1 Positive Acknowledgement

Table 26-41 Start—Positive Acknowledgement

Parameter Name	Type	M/ O/C	Description
security	CSTASecurityData	O	Specifies timestamp information, message sequence number, and security information.
privateData	CSTAPrivateData	O	Specifies non-standardized information.

26.1.14.2.2 Negative Acknowledgement

The negative acknowledgement error codes are described in 12.2.14, “ErrorValue”, on page 115.

26.1.14.3 Operational Model

Refer to Figure 6.1.1.4.8, “Generic Interactive Voice Device Category,” on page 31 for the operational model.

26.1.14.3.1 Connection State Transitions

There are no connection state changes due to this service.

For Interactive Voice Devices refer to for normative resource state transitions specified in Figure 6-17, Figure 6-18, and Figure 6-19 in Clause 6.1.1.4.8, “Generic Interactive Voice Device Category”, beginning on page 31.

26.1.14.3.2 Device-Type Monitoring Event Sequences

Table 26-42 Start —Device-Type Monitoring Event Sequences

Monitored Device	Connection	Event	Event Cause
D1	D1C1 (overConnection)	Started	Normal, Forced Transition
		Voice Error Occurred	Activation, Bad Grammar, Bad URI, Duplicat DTMF, Empty Queue, Max Timeout, No Audio Saved, No Rule

26.1.14.3.3 Call-Type Monitoring Event Sequences

Table 26-43 Start —Call-Type Monitoring Event Sequences

Monitored Call	Connection	Event	Event Cause
C1	D1C1 (overConnection)	Started	Normal
		Voice Error Occurred	Activation, Bad Grammar, Bad URI, Duplicat DTMF, Empty Queue, Max Timeout, No Audio Saved, No Rule

© ISO/IEC 2007 – All rights reserved

Copyright International Organization for Standardization
Provided by IHS under license with ISO
No reproduction or networking permitted without license from IHS
Not for Resale

26.1.14.3.4 Functional Requirements

1. For Prompt with Prompt Queue, the service request is semantically equivalent to a Queue immediately followed by a Start service on the Prompt Queue of the call. For call without a Prompt Queue joined or conferenced in, the service immediately starts the playback.
2. The service request directed at a non NULL input device will be ignored with a positive acknowledgement.

26.1.15 Stop

C ⟶ S

The Stop service stops a voice resource.

- For message, the Stop service stops playing or recording of a message and resets the position pointer to the beginning of the message.
- For Listener, the Stop Service halts the speech input and forces a result based on the input collected up to the point the service request is received.
- For DTMF, the Stop Service halts the DTMF inputs and forces a result based on the input collected up to the point the service request is received.
- For Prompt Queue, the Stop service halts the playback and discards the contents of the frontmost subqueue.

26.1.15.1 Service Request

Table 26-44 Stop—Service Request

Parameter Name	Type	M/ O/C	Description
connection	ConnectionID	M	Specifies the connection on which the interaction is to be stopped.
messageToBeStopped	MessageID	C	Specifies the message whose voice attribute is to be set. This parameter is mandatory if there are multiple active messages on the specified connection, otherwise the parameter is optional. If this parameter is not provided and the service applies to a message, then the service applies to the currently active message on the specified connection.
resource	ResourceID	C	Specifies the interactive voice resource for this service. This parameter is required if there are multiple interactive voice resources per connection.
security	CSTASecurityData	O	Specifies timestamp information, message sequence number, and security information.
privateData	CSTAPrivateData	O	Specifies non-standardized information.

26.1.15.2 Service Response

This service follows the atomic acknowledgement model for this service request.

© ISO/IEC 2007 – All rights reserved

Copyright International Organization for Standardization
Provided by IHS under license with ISO
No reproduction or networking permitted without license from IHS
Not for Resale

26.1.15.2.1 Positive Acknowledgement

Table 26-45 Stop—Positive Acknowledgement

Parameter Name	Type	M/ O/C	Description
security	CSTASecurityData	O	Specifies timestamp information, message sequence number, and security information.
privateData	CSTAPrivateData	O	Specifies non-standardized information.

26.1.15.2.2 Negative Acknowledgement

The negative acknowledgement error codes are described in 12.2.14, “ErrorValue”, on page 115.

26.1.15.3 Operational Model

Refer to See “Generic Interactive Voice Device Category” on page 31. for the operational models of the various types of Voice devices.

26.1.15.3.1 Connection State Transitions

There are no connection state changes due to this service.

For Interactive Voice Devices refer to for normative resource state transitions specified in Figure 6-17, Figure 6-18, and Figure 6-19 in Clause 6.1.1.4.8, “Generic Interactive Voice Device Category”, beginning on page 31.

26.1.15.3.2 Device-Type Monitoring Event Sequence

Event sequences depend upon the type of voice device.

For a Message device:

Table 26-46 Stop —Device-Type Monitoring Event Sequences for Voice Unit device

Monitored Device	Connection	Event	Event Cause
D1	D1C1 (connection)	Stop	Normal

For Listener and DTMF devices:

Table 26-47 Stop —Device-Type Monitoring Event Sequences for Listener & DTMF devices

Monitored Device	Connection	Event	Event Cause
D1	D1C1 (connection)	Recognized*	Normal
		Not Recognized*	Normal
		Voice Error Occurred*	Early Stop

*Note that only one event will be generated.

For Prompt device: There are no Voice events for a Prompt device.

--`,,```,,,,````-`-`,,`,,`,`,,`---
© ISO/IEC 2007 – All rights reserved
Copyright International Organization for Standardization
Provided by IHS under license with ISO
No reproduction or networking permitted without license from IHS
Not for Resale

For Prompt Queue device:

Table 26-48 Stop —Device-Type Monitoring Event Sequences for Prompt Queue device

Monitored Device	Connection	Event	Event Cause
D1	D1C1 (connection)	Emptied	Normal

26.1.15.3.3 Call-Type Monitoring Event Sequence

Event sequences depend upon the type of voice device.

For a Message device:

Table 26-49 Stop —Call-Type Monitoring Event Sequences for Voice Unit device

Monitored Device	Connection	Event	Event Cause
C1	D1C1 (connection)	Stop	Normal

For Listener and DTMF devices:

Table 26-50 Stop —Call-Type Monitoring Event Sequences for Listener & DTMF devices

Monitored Device	Connection	Event	Event Cause
C1	D1C1 (connection)	Recognized*	Normal
		Not Recognized*	Normal
		Voice Error Occurred*	Early Stop

*Note that only one event will be generated.

For Prompt device: There are no Voice events for a Prompt device.

For Prompt Queue device:

Table 26-51 Stop —Call-Type Monitoring Event Sequences for Prompt Queue device

Monitored Device	Connection	Event	Event Cause
C1	D1C1 (connection)	Emptied	Normal

26.1.15.3.4 Functional Requirements

None.

26.1.16 Suspend

C → S

The Suspend service temporarily stops the voice resource.

- For message, the Suspend Service temporarily stops the playing or recording of a message at the current message and sets the position pointer to be the current position for the Voice Unit,
- For Prompt Queue, the Suspend Service temporarily stops the playing back of a prompt in the Prompt Queue.

© ISO/IEC 2007 – All rights reserved

Copyright International Organization for Standardization
Provided by IHS under license with ISO
No reproduction or networking permitted without license from IHS
Not for Resale

26.1.16.1 Service Request

Table 26-52 Suspend—Service Request

Parameter Name	Type	M/ O/C	Description
connection	ConnectionID	M	Specifies the connection on which the message is to be suspended.
message	MessageID	C	Specifies the message to be suspended. This parameter is mandatory if there are multiple active messages on the specified connection, otherwise the parameter is optional. If this parameter is not provided and the service is intended for a message, the service applies to the currently active message on the specified connection.
resource	ResourceID	C	Specifies the interactive voice resource for this service. This parameter is required if there are multiple interactive voice resources per connection.
security	CSTASecurityData	O	Specifies timestamp information, message sequence number, and security information.
privateData	CSTAPrivateData	O	Specifies non-standardized information.

26.1.16.2 Service Response

This service follows the atomic acknowledgement model for this service request.

26.1.16.2.1 Positive Acknowledgement

Table 26-53 Suspend—Positive Acknowledgement

Parameter Name	Type	M/ O/C	Description
security	CSTASecurityData	O	Specifies timestamp information, message sequence number, and security information.
privateData	CSTAPrivateData	O	Specifies non-standardized information.

26.1.16.2.2 Negative Acknowledgement

The negative acknowledgement error codes are described in 12.2.14, “ErrorValue”, on page 115.

26.1.16.3 Operational Model

Refer to Figure 6-16, “Voice Unit Operational Model,” on page 30 for the operational model of the Voice Unit, or Figure 6-19, “Operational Model of a subqueue in a Prompt Queue Resource,” on page 36 for the operational model of Prompt Queue.

26.1.16.3.1 Connection State Transitions

There are no connection state changes due to this service.

© ISO/IEC 2007 – All rights reserved

Copyright International Organization for Standardization
Provided by IHS under license with ISO
No reproduction or networking permitted without license from IHS
Not for Resale

26.1.16.3.2 Device-Type Monitoring Event Sequences

Table 26-54 Suspend —Device-Type Monitoring Event Sequences

Monitored Device	Connection	Event	Event Cause
D1	D1C1 (connection)	Suspend Play (if suspended while playing)	Normal
		Suspend Record (if suspended while recording)	Normal

26.1.16.3.3 Call-Type Monitoring Event Sequences

Table 26-55 Suspend —Call-Type Monitoring Event Sequences

Monitored Call	Connection	Event	Event Cause
C1	D1C1 (connection)	Suspend Play (if suspended while playing)	Normal
		Suspend Record (if suspended while recording)	Normal

26.1.16.3.4 Functional Requirements

1. While the message is suspended, the position pointer in the message can be changed by using the Reposition service.
2. The Voice Unit shall continue to play or record the message starting at its position pointer upon receiving the Resume service request.

26.1.17 Synthesize Message

C ⟶ S

The Synthesize Message service constructs a voice message from a text stream.

This service returns the Message Identifier of the constructed message in the positive acknowledgement.

The Synthesize Message service is a “text to speech” function.

26.1.17.1 Service Request

Table 26-56 Synthesize Message—Service Request

Parameter Name	Type	M/ O/C	Description
textToBeSynthesized	Characters	M	Specifies the text to be converted to voice.

control	List	O	Specifies the control information to be used in construction the voice message. This includes the following:
			• gender (M) Enumerated - The complete set of possible values is:
			  • male voice
			  • female voice
			• language (M) Characters - This is a character string specifying the language.

security	CSTASecurityData	O	Specifies timestamp information, message sequence number, and security information.
privateData	CSTAPrivateData	O	Specifies non-standardized information.

© ISO/IEC 2007 – All rights reserved

Copyright International Organization for Standardization
Provided by IHS under license with ISO
No reproduction or networking permitted without license from IHS
Not for Resale

26.1.17.2 Service Response

This service follows the atomic acknowledgement model for this service request.

26.1.17.2.1 Positive Acknowledgement

Table 26-57 Synthesize Message—Positive Acknowledgement

Parameter Name	Type	M/ O/C	Description
synthesizedMessage	MessageID	M	Specifies the Message ID that was constructed.
security	CSTASecurityData	O	Specifies timestamp information, message sequence number, and security information.
privateData	CSTAPrivateData	O	Specifies non-standardized information.

26.1.17.2.2 Negative Acknowledgement

The negative acknowledgement error codes are described in 12.2.14, “ErrorValue”, on page 115.

26.1.17.3 Operational Model

26.1.17.3.1 Connection State Transitions

There are no connection state changes due to this service.

26.1.17.3.2 Device-Type Monitoring Event Sequences

There are no events generated as a result of this service.

26.1.17.3.3 Call-Type Monitoring Event Sequences

There are no events generated as a result of this service.

26.1.17.3.4 Functional Requirements

None.

26.2 Events

Table 26-58 Voice Events Summary

Voice Event	Description	Pg.
26.2.1 Bookmark Reached	The Bookmark Reached event indicates a mark in the speech synthesis markup language has been reached. No resource state is changed as a result of this event.	573
26.2.2 Completed	The Completed event indicates a prompt has been fully rendered. Just prior to this event, the subqueue containing the prompt must be in the Playing state.	574
26.2.3 DTMF Detected	The DTMF Detected event indicates a DTMF digit has been detected.	574
26.2.4 Emptied	The Emptied event indicates the data of a Listener, DTMF or a subqueue in the Prompt Queue has been emptied.	575
26.2.5 Interruption Detected	The Interruption Detected event indicates an activity has been detected at an Interactive Voice input device during the prompt playback.	576
26.2.6 Not Recognized	The Not Recognized event indicates no outcome or an outcome below the rejection threshold has been detected.	576
17.2.1 Bridged	The Play event indicates that a message is being played.	301

© ISO/IEC 2007 – All rights reserved

Copyright International Organization for Standardization
Provided by IHS under license with ISO
No reproduction or networking permitted without license from IHS
Not for Resale

Table 26-58 Voice Events Summary (continued)

Voice Event	Description	Pg.
26.2.8 Recognized	The Recognized event indicates an outcome above the rejection threshold has been detected.	578
26.2.9 Record	The Record event indicates that a message is being recorded.	579
26.2.10 Review	The Review event indicates that a message is being reviewed.	580
26.2.11 Silence Timeout Expired	The Silence Timeout Expired event indicates the silence timeout has been expired for an Interactive Voice input device.	580
26.2.12 Speech Detected	The Speech Detected event indicates a speech like sound has been detected at a Listener.	581
26.2.13 Started	The Started event indicates a voice resource has started interactions with the call and entered the Started state.	582
26.2.14 Stop	The Stop event indicates that a message play or record operation on a connection has stopped.	582
26.2.15 Suspend Play	The Suspend Play event indicates that a message is suspended in play.	583
26.2.16 Suspend Record	The Suspend Record event indicates that a message is suspended during record.	584
26.2.17 Voice Attribute Changed	The Voice Attribute changed event indicates that one or more attributes of a voice message/resource has changed.	585
26.2.18 Voice Error Occurred	The Voice Error Occurred event indicates an error or exception has been encountered.	587

26.2.1 Bookmark Reached

The Bookmark Reached event indicates a mark in the speech synthesis markup language has been reached. No resource state is changed as a result of this event.

26.2.1.1 Event Parameters

Table 26-59 Bookmark Reached—Event Parameters

Parameter Name	Type	M/ O/C	Description
monitorCrossRefID	MonitorCrossRefID	M	Associates the event to an established monitor.
overConnection	ConnectionID	M	Indicates the connection from which the event is generated.
resource	ResourceID	C	Indicates the interactive voice resource for this service. This parameter is required if there are multiple interactive voice resources per connection.
bookmark	Characters	M	Indicates the name of the bookmark in the synthesis markup being reached.
cause	EventCause	O	Indicates the reason for the event.
servicesPermitted	ServicesPermitted	O	Indicates a list of services that can be applied to the local connection.
security	CSTASecurityData	O	Indicates timestamp information, message sequence number, and security information.
privateData	CSTAPrivateData	O	Indicates the non-standardized information attached to the event.

© ISO/IEC 2007 – All rights reserved

Copyright International Organization for Standardization
Provided by IHS under license with ISO
No reproduction or networking permitted without license from IHS
Not for Resale

26.2.1.2 Event Causes

Table 26-60 Bookmark Reached—Event Causes

Event Cause	Description	Associated Features
Normal	The prompt rendering has reached a bookmark in the speech synthesis markup.	Start

26.2.2 Completed

The Completed event indicates a prompt has been fully rendered. Just prior to this event, the subqueue containing the prompt must be in the Playing state. This event indicates the prompt queue has either entered the Null state if the prompt is the last entry in the subqueue, or has proceeded to play the next prompt and remains in the Playing state.

26.2.2.1 Event Parameters

Table 26-61 Completed—Event Parameters

Parameter Name	Type	M/ O/C	Description
monitorCrossRefID	MonitorCrossRefID	M	Associates the event to an established monitor.
overConnection	ConnectionID	M	Indicates the connection from which the event is generated.
resource	ResourceID	C	Indicates the interactive voice resource for this service. This parameter is required if there are multiple interactive voice resources per connection.
cause	EventCause	O	Indicates the reason for the event.
servicesPermitted	ServicesPermitted	O	Indicates a list of services that can be applied to the local connection.
security	CSTASecurityData	O	Indicates timestamp information, message sequence number, and security information.
privateData	CSTAPrivateData	O	Indicates the non-standardized information attached to the event.

26.2.2.2 Event Causes

Table 26-62 Completed—Event Causes

Event Cause	Description	Associated Features
Normal	A prompt has been rendered in its entirety.	Start

26.2.3 DTMF Detected

The DTMF Detected event indicates a DTMF character has been detected. This event indicates the resource has entered the DTMF Detected state.

26.2.3.1 Event Parameters

Table 26-63 DTMF Detected—Event Parameters

Parameter Name	Type	M/ O/C	Description
monitorCrossRefID	MonitorCrossRefID	M	Associates the event to an established monitor.

© ISO/IEC 2007 – All rights reserved

Copyright International Organization for Standardization
Provided by IHS under license with ISO
No reproduction or networking permitted without license from IHS
Not for Resale

Table 26-63 DTMF Detected—Event Parameters (continued)

Parameter Name	Type	M/ O/C	Description
overConnection	ConnectionID	M	Indicates the connection from which the event is generated.
resource	ResourceID	C	Indicates the interactive voice resource for this service. This parameter is required if there are multiple interactive voice resources per connection.
dtmfChar	Characters	M	Indicates the single DTMF character detected.
cause	EventCause	O	Indicates the reason for the event.
servicesPermitted	ServicesPermitted	O	Indicates a list of services that can be applied to the local connection.
security	CSTASecurityData	O	Indicates timestamp information, message sequence number, and security information.
privateData	CSTAPrivateData	O	Indicates the non-standardized information attached to the event.

26.2.3.2 Event Causes

Table 26-64 DTMF Detected—Event Causes

Event Cause	Description	Associated Features
Normal	A DTMF character has been detected	Start

26.2.4 Emptied

The Emptied event indicates the data of a Listener, DTMF or a subqueue in the Prompt Queue has been emptied. This event indicates the voice resource has entered the Null resource state.

26.2.4.1 Event Parameters

Table 26-65 Emptied—Event Parameters

Parameter Name	Type	M/ O/C	Description
monitorCrossRefID	MonitorCrossRefID	M	Associates the event to an established monitor.
overConnection	ConnectionID	M	Indicates the connection from which the event is generated.
resource	ResourceID	C	Indicates the interactive voice resource for this service. This parameter is required if there are multiple interactive voice resources per connection.
cause	EventCause	O	Indicates the reason for the event.
servicesPermitted	ServicesPermitted	O	Indicates a list of services that can be applied to the local connection.
security	CSTASecurityData	O	Indicates timestamp information, message sequence number, and security information.
privateData	CSTAPrivateData	O	Indicates the non-standardized information attached to the event.

© ISO/IEC 2007 – All rights reserved

Copyright International Organization for Standardization
Provided by IHS under license with ISO
No reproduction or networking permitted without license from IHS
Not for Resale

26.2.4.2 Event Causes

Table 26-66 Emptied—Event Causes

Event Cause	Description	Associated Features
Forced Transition	The data in the Listener, DTMF or the frontmost subqueue of the Prompt Queue have been discarded due to the operations of other interactive voice resources.	Start, Queue
Normal	The contents in the DTMF or the frontmost subqueue of a Prompt Queue have been depleted	Start, Clear, Stop

26.2.5 Interruption Detected

The Interruption Detected event indicates an activity has been detected at an Interactive Voice input device during the prompt playback. The prompt being played will be stopped automatically if and only if it is designated as auto-interruptible. If the playback has been stopped, this event indicates the resource has entered the Null state. Otherwise, the resource remains in the Playing state.

26.2.5.1 Event Parameters

Table 26-67 Interruption Detected—Event Parameters

Parameter Name	Type	M/ O/C	Description
monitorCrossRefID	MonitorCrossRefID	M	Associates the event to an established monitor.
overConnection	ConnectionID	M	Indicates the connection from which the event is generated.
resource	ResourceID	C	Indicates the interactive voice resource for this service. This parameter is required if there are multiple interactive voice resources per connection.
cause	EventCause	O	Indicates the reason for the event.
servicesPermitted	ServicesPermitted	O	Indicates a list of services that can be applied to the local connection.
security	CSTASecurityData	O	Indicates timestamp information, message sequence number, and security information.
privateData	CSTAPrivateData	O	Indicates the non-standardized information attached to the event.

26.2.5.2 Event Causes

Table 26-68 Interruption Detected—Event Causes

Event Cause	Description	Associated Features
Normal	An input activity is detected during a prompt playback.	Start

26.2.6 Not Recognized

The Not Recognized event indicates no outcome or an outcome below the rejection threshold has been detected. This event indicates the resource has entered the Null resource state.

© ISO/IEC 2007 – All rights reserved

Copyright International Organization for Standardization
Provided by IHS under license with ISO
No reproduction or networking permitted without license from IHS
Not for Resale

26.2.6.1 Event Parameters

Table 26-69 Not Recognized—Event Parameters

Parameter Name	Type	M/ O/C	Description
monitorCrossRefID	MonitorCrossRefID	M	Associates the event to an established monitor.
overConnection	ConnectionID	M	Indicates the connection from which the event is generated.
resource	ResourceID	C	Indicates the interactive voice resource for this service. This parameter is required if there are multiple interactive voice resources per connection.
result	Characters	O	Indicates the processed outcome from the input.
cause	EventCause	O	Indicates the reason for the event.
servicesPermitted	ServicesPermitted	O	Indicates a list of services that can be applied to the local connection.
security	CSTASecurityData	O	Indicates timestamp information, message sequence number, and security information.
privateData	CSTAPrivateData	O	Indicates the non-standardized information attached to the event.

26.2.6.2 Event Causes

Table 26-70 Not Recognized—Event Causes

Event Cause	Description	Associated Features
Babble	Speech is detected but the Babble Timeout has expired.	Start
InterdigitTimeout	inter-digit timeout has expired.	Start
Normal	A result exceeding the rejection threshold cannot be found.	Start, Stop
OutOfGrammar	A DTMF key outside of the grammar is detected.	Start

26.2.7 Play

The Play event indicates that a message is being played.

26.2.7.1 Event Parameters

Table 26-71 Play—Event Parameters

Parameter Name	Type	M/ O/C	Description
monitorCrossRefID	MonitorCrossRefID	M	Associates the event to an established monitor.
connection	ConnectionID	M	Indicates the connection on which the message is being played.
message	MessageID	C	Indicates the message that is being played. This parameter is required if the event pertains to a message.
resource	ResourceID	C	Indicates the interactive voice resource for this service. This parameter is required if there are multiple interactive voice resources per connection.
length	Value	O	Indicates the length of the message in milliseconds.

© ISO/IEC 2007 – All rights reserved

Copyright International Organization for Standardization
Provided by IHS under license with ISO
No reproduction or networking permitted without license from IHS
Not for Resale

Table 26-71 Play—Event Parameters (continued)

Parameter Name	Type	M/ O/C	Description
currentPosition	Value	O	Indicates the number of milliseconds from the start of the message.
speed	Value	O	Indicates the current playing speed of the message (represents the percentage of normal speed, with 100% being normal speed and the slowest reportable speed being 1%).
cause	EventCause	O	Indicates the reason for the event.
servicesPermitted	ServicesPermitted	O	Indicates a list of services that can be applied to the local connection.
security	CSTASecurityData	O	Indicates timestamp information, message sequence number, and security information.
privateData	CSTAPrivateData	O	Indicates the non-standardized information attached to the event.

26.2.7.2 Event Causes

Table 26-72 Play—Event Causes

Event Cause	Description	Associated Features
Next Message	The next message within a sequence of messages is being played (in the case where concurrent play operations are queued, for example).	Play Message
Normal	A message is being played (a more specific cause cannot be provided).	Play Message

26.2.8 Recognized

The Recognized event indicates an outcome above the rejection threshold has been detected. For a Listener under the multiple mode, the resource state can be either Speech Detected or Null. Otherwise, this event indicates the resource has entered the Null resource state.

26.2.8.1 Event Parameters

Table 26-73 Recognized—Event Parameters

Parameter Name	Type	M/ O/C	Description
monitorCrossRefID	MonitorCrossRefID	M	Associates the event to an established monitor.
overConnection	ConnectionID	M	Indicates the connection from which the event is generated.
resource	ResourceID	C	Indicates the interactive voice resource for this service. This parameter is required if there are multiple interactive voice resources per connection.
result	Characters	M	Indicates the processed outcome from the input device. The result string can be in either SALT SML or W3C EMMA format, which include confidence measures as well as semantic parses.
text	Characters	M	A text transcription for the result.
cause	EventCause	O	Indicates the reason for the event.

© ISO/IEC 2007 – All rights reserved

Copyright International Organization for Standardization
Provided by IHS under license with ISO
No reproduction or networking permitted without license from IHS
Not for Resale

Table 26-73 Recognized—Event Parameters (continued)

Parameter Name	Type	M/ O/C	Description
servicesPermitted	ServicesPermitted	O	Indicates a list of services that can be applied to the local connection.
security	CSTASecurityData	O	Indicates timestamp information, message sequence number, and security information.
privateData	CSTAPrivateData	O	Indicates the non-standardized information attached to the event.

26.2.8.2 Event Causes

Table 26-74 Recognized—Event Causes

Event Cause	Description	Associated Features
Normal	The result exceeding the rejection threshold has been detected.	Start, Stop

26.2.9 Record

The Record event indicates that a message is being recorded.

26.2.9.1 Event Parameters

Table 26-75 Record—Event Parameters

Parameter Name	Type	M/ O/C	Description
monitorCrossRefID	MonitorCrossRefID	M	Associates the event to an established monitor.
connection	ConnectionID	M	Indicates the connection on which the message is being recorded.
message	MessageID	C	Indicates the message that is being recorded. This parameter is required if the event pertains to a message.
resource	ResourceID	C	Indicates the interactive voice resource for this service. This parameter is required if there are multiple interactive voice resources per connection.
length	Value	O	Indicates the length of the message in milliseconds.
currentPosition	Value	O	Indicates the number of milliseconds from the start of the message.
cause	EventCause	O	Indicates the reason for the event.
servicesPermitted	ServicesPermitted	O	Indicates a list of services that can be applied to the local connection.
security	CSTASecurityData	O	Indicates timestamp information, message sequence number, and security information.
privateData	CSTAPrivateData	O	Indicates the non-standardized information attached to the event.

© ISO/IEC 2007 – All rights reserved

Copyright International Organization for Standardization
Provided by IHS under license with ISO
No reproduction or networking permitted without license from IHS
Not for Resale

26.2.9.2 Event Causes

Table 26-76 Record—Event Causes

Event Cause	Description	Associated Features
Normal	A message is being recorded (a more specific cause cannot be provided).	Record Message

26.2.10 Review

The Review event indicates that a previously recorded message is being reviewed.

26.2.10.1 Event Parameters

Table 26-77 Review—Event Parameters

Parameter Name	Type	M/ O/C	Description
monitorCrossRefID	MonitorCrossRefID	M	Associates the event to an established monitor.
connection	ConnectionID	M	Indicates the connection on which the message is being reviewed.
message	MessageID	C	Indicates the message that is being reviewed. This parameter is required if the event pertains to a message.
resource	ResourceID	C	Indicates the interactive voice resource for this service. This parameter is required if there are multiple interactive voice resources per connection.
length	Value	O	Indicates the length of the message in milliseconds.
currentPosition	Value	O	Indicates the number of milliseconds from the start of the message.
cause	EventCause	O	Indicates the reason for the event.
servicesPermitted	ServicesPermitted	O	Indicates a list of services that can be applied to the local connection.
security	CSTASecurityData	O	Indicates timestamp information, message sequence number, and security information.
privateData	CSTAPrivateData	O	Indicates the non-standardized information attached to the event.

26.2.10.2 Event Causes

Table 26-78 Review—Event Causes

Event Cause	Description	Associated Features
Normal	A message is being reviewed (a more specific cause cannot be provided).	Review Message

26.2.11 Silence Timeout Expired

The Silence Timeout Expired event indicates the silence timeout has expired for an Interactive Voice input device. This event indicates the resource has entered the Null resource state.

--`,,```,,,,````-`-`,,`,,`,`,,`---
© ISO/IEC 2007 – All rights reserved
Copyright International Organization for Standardization
Provided by IHS under license with ISO
No reproduction or networking permitted without license from IHS
Not for Resale

26.2.11.1 Event Parameters

Table 26-79 Silence Timeout Expired—Event Parameters

Parameter Name	Type	M/ O/C	Description
monitorCrossRefID	MonitorCrossRefID	M	Associates the event to an established monitor.
overConnection	ConnectionID	M	Indicates the connection from which the event is generated.
resource	ResourceID	C	Indicates the interactive voice resource for this service. This parameter is required if there are multiple interactive voice resources per connection.
cause	EventCause	O	Indicates the reason for the event.
servicesPermitted	ServicesPermitted	O	Indicates a list of services that can be applied to the local connection.
security	CSTASecurityData	O	Indicates timestamp information, message sequence number, and security information.
privateData	CSTAPrivateData	O	Indicates the non-standardized information attached to the event.

26.2.11.2 Event Causes

Table 26-80 Silence Timeout Expired—Event Causes

Event Cause	Description	Associated Features
Normal	The silence timeout has expired.	Start

26.2.12 Speech Detected

The Speech Detected event indicates a speech-like sound has been detected at a Listener. This event indicates the resource has entered the Speech Detected state.

26.2.12.1 Event Parameters

Table 26-81 Speech Detected—Event Parameters

Parameter Name	Type	M/ O/C	Description
monitorCrossRefID	MonitorCrossRefID	M	Associates the event to an established monitor.
overConnection	ConnectionID	M	Indicates the connection from which the event is generated.
resource	ResourceID	C	Indicates the interactive voice resource for this service. This parameter is required if there are multiple interactive voice resources per connection.
cause	EventCause	O	Indicates the reason for the event.
servicesPermitted	ServicesPermitted	O	Indicates a list of services that can be applied to the local connection.
security	CSTASecurityData	O	Indicates timestamp information, message sequence number, and security information.
privateData	CSTAPrivateData	O	Indicates the non-standardized information attached to the event.

© ISO/IEC 2007 – All rights reserved

Copyright International Organization for Standardization
Provided by IHS under license with ISO
No reproduction or networking permitted without license from IHS
Not for Resale

26.2.12.2 Event Causes

Table 26-82 Speech Detected—Event Causes

Event Cause	Description	Associated Features
Normal	Speech has been detected from the audio input.	Start

26.2.13 Started

The Started event indicates a voice resource has started interactions with the call and entered the Started state.

26.2.13.1 Event Parameters

Table 26-83 Started—Event Parameters

Parameter Name	Type	M/ O/C	Description
monitorCrossRefID	MonitorCrossRefID	M	Associates the event to an established monitor.
overConnection	ConnectionID	M	Indicates the connection from which the event is generated.
resource	ResourceID	C	Indicates the interactive voice resource for this service. This parameter is required if there are multiple interactive voice resources per connection.
cause	EventCause	O	Indicates the reason for the event.
servicesPermitted	ServicesPermitted	O	Indicates a list of services that can be applied to the local connection.
security	CSTASecurityData	O	Indicates timestamp information, message sequence number, and security information.
privateData	CSTAPrivateData	O	Indicates the non-standardized information attached to the event.

26.2.13.2 Event Causes

Table 26-84 Started—Event Causes

Event Cause	Description	Associated Features
Forced Transition	The interaction is started due to activity of another resource involved with the call.	Start
Normal	The interaction is started as a result of the Start service	Start

26.2.14 Stop

The Stop event indicates that a play or record operation for a message on a connection has been stopped.

26.2.14.1 Event Parameters

Table 26-85 Stop—Event Parameters

Parameter Name	Type	M/ O/C	Description
monitorCrossRefID	MonitorCrossRefID	M	Associates the event to an established monitor.
connection	ConnectionID	M	Indicates the connection of the stopped message.

© ISO/IEC 2007 – All rights reserved

Copyright International Organization for Standardization
Provided by IHS under license with ISO
No reproduction or networking permitted without license from IHS
Not for Resale

Table 26-85 Stop—Event Parameters (continued)

Parameter Name	Type	M/ O/C	Description
message	MessageID	C	Indicates the message that is being stopped. This parameter is required if the event pertains to a message.
resource	ResourceID	C	Indicates the interactive voice resource for this service. This parameter is required if there are multiple interactive voice resources per connection.
length	Value	O	Indicates the length of the message in milliseconds.
currentPosition	Value	O	Indicates the number of milliseconds from the start of the message.
cause	EventCause	O	Indicates the reason for the event.
servicesPermitted	ServicesPermitted	O	Indicates a list of services that can be applied to the local connection.
security	CSTASecurityData	O	Indicates timestamp information, message sequence number, and security information.
privateData	CSTAPrivateData	O	Indicates the non-standardized information attached to the event.

26.2.14.2 Event Causes

Table 26-86 Stop—Event Causes

Event Cause	Description	Associated Features
DTMF Digit Detected	A DTMF digit was detected during a play or record operation.	Play Message, Record Message, Review Message
End of Message Detected	The end of the message was detected during a play or record operation.	Play Message, Record message
Message Duration Exceeded	The maximum permitted time duration for a play or record operation was detected.	Play Message, Record Message
Message Size Exceeded	The maximum permitted size of the message was detected during a recording operation.	Record Message
Normal	A message has stopped playing or recording (a more specific cause cannot be provided).	Stop Message, Play Message, Record Message
No Speech Detected	A period of silence was detected during a record operation.	Record Message
Speech Detected	Speech (or non-silence) was detected while a message was playing.	Play Message, Review Message

26.2.15 Suspend Play

The Suspend Play event indicates that a message is suspended in play.

26.2.15.1 Event Parameters

Table 26-87 Suspend Play—Event Parameters

Parameter Name	Type	M/ O/C	Description
monitorCrossRefID	MonitorCrossRefID	M	Associates the event to an established monitor.
connection	ConnectionID	M	Indicates the connection of the suspended message.

© ISO/IEC 2007 – All rights reserved

Copyright International Organization for Standardization
Provided by IHS under license with ISO
No reproduction or networking permitted without license from IHS
Not for Resale

Table 26-87 Suspend Play—Event Parameters (continued)

Parameter Name	Type	M/ O/C	Description
message	MessageID	C	Indicates the message that is being suspended. This parameter is required if the event pertains to a message.
resource	ResourceID	C	Indicates the interactive voice resource for this service. This parameter is required if there are multiple interactive voice resources per connection.
length	Value	O	Indicates the length of the message in milliseconds.
currentPosition	Value	O	Indicates the number of milliseconds from the start of the message.
cause	EventCause	O	Indicates the reason for the event.
servicesPermitted	ServicesPermitted	O	Indicates a list of services that can be applied to the local connection.
security	CSTASecurityData	O	Indicates timestamp information, message sequence number, and security information.
privateData	CSTAPrivateData	O	Indicates the non-standardized information attached to the event.

26.2.15.2 Event Causes

Table 26-88 Suspend Play—Event Causes

Event Cause	Description	Associated Features
DTMF Digit Detected	A DTMF digit was detected during a play operation.	Play Message
Normal	A message has suspended playing (a more specific cause cannot be provided).	Play Message
Speech Detected	Speech (or non-silence) was detected while a message was playing.	Play Message

26.2.16 Suspend Record

The Suspend Record event indicates that a message is suspended during recording.

26.2.16.1 Event Parameters

Table 26-89 Suspend Record—Event Parameters

Parameter Name	Type	M/ O/C	Description
monitorCrossRefID	MonitorCrossRefID	M	Associates the event to an established monitor.
connection	ConnectionID	M	Indicates the connection of the suspended message.
message	MessageID	C	Indicates the message that is being suspended. This parameter is required if the event pertains to a message.
resource	ResourceID	C	Indicates the interactive voice resource for this service. This parameter is required if there are multiple interactive voice resources per connection.
length	Value	O	Indicates the length of the message in milliseconds.
currentPosition	Value	O	Indicates the number of milliseconds from the start of the message.

© ISO/IEC 2007 – All rights reserved

Copyright International Organization for Standardization
Provided by IHS under license with ISO
No reproduction or networking permitted without license from IHS
Not for Resale

Table 26-89 Suspend Record—Event Parameters (continued)

Parameter Name	Type	M/ O/C	Description
cause	EventCause	O	Indicates the reason for the event.
servicesPermitted	ServicesPermitted	O	Indicates a list of services that can be applied to the local connection.
security	CSTASecurityData	O	Indicates timestamp information, message sequence number, and security information.
privateData	CSTAPrivateData	O	Indicates the non-standardized information attached to the event.

26.2.16.2 Event Causes

Table 26-90 Suspend Record—Event Causes

Event Cause	Description	Associated Features
DTMF Digit Detected	A DTMF digit was detected during a record operation.	Record Message
Message Size Exceeded	The maximum permitted size of the message was detected during a recording operation.	Record Message
Normal	A message has stopped recording (a more specific cause cannot be provided).	Record Message
No Speech Detected	A period of silence was detected during a record operation.	Record Message

26.2.17 Voice Attribute Changed

The Voice Attribute changed event indicates that one or more attributes of a voice message/resource has changed.

26.2.17.1 Event Parameters

Table 26-91 Voice Attribute Changed—Event Parameters

Parameter Name	Type	M/ O/C	Description
monitorCrossRefID	MonitorCrossRefID	M	Associates the event to an established monitor.
connection	ConnectionID	M	Indicates the connection for the message whose attribute has changed.
message	MessageID	C	Indicates the message that has changed. This parameter is required if the changed attribute pertains to a message.
resource	ResourceID	C	Indicates the interactive voice resource for this service. This parameter is required if there are multiple interactive voice resources per connection.

© ISO/IEC 2007 – All rights reserved

Copyright International Organization for Standardization
Provided by IHS under license with ISO
No reproduction or networking permitted without license from IHS
Not for Resale

Table 26-91 Voice Attribute Changed—Event Parameters (continued)

Parameter Name	Type	M/ O/C	Description

playVolume	Choice Structure	O	Indicates the current play volume as an absolute value or that the volume was incremented or decremented by a switch specified increment.
			It may be one of the following possible choices:
			• playVolAbs (Value) - Specifies a value from 0 through 100. 0 indicates silence, and 100 indicates maximum volume. The granularity and quantization of the values 1 though 99 are device specific.
			• playVolInc (Enumerated) - Specifies if the volume was incremented or decremented by a switch specified amount. The complete set of possible values is:
			  • increment - the volume was incremented.
			  • decrement - the volume was decremented.

recordingGain	Value (0..100)	O	Indicates the current recording level (100 indicating maximum gain and 0 indicating minimum gain).
speed	Value	O	Indicates the current playing speed of the message (represents the percentage of normal speed, with 100% being normal speed and the slowest reportable speed being 1%).
currentPosition	Value	O	Indicates the number of milliseconds from the start of the message.
grammars	Characters	O	Indicates a list of grammars in URI currently used to process speech or DTMF inputs (for Listener, DTMF, Prompt Queue).
language	Characters	O	Indicates the languages(s) in XML:LANG format the Listener is capable of processing, or the language the Prompt is currently using (for Listener, Prompt).
mode	Choice	O	Indicates the operation mode (for Listener). The complete set of possible values is: • automatic • single • multiple
retainAudio	Boolean	O	Indicates the boolean flag indicating whether the audio is being recorded (for Listener).
silenceTimeout	Value	O	Indicates the timeout value in milliseconds that will cause Silence Timeout expiration (for Listener, DTMF).
maxTimeout	Value	O	Indicates the value in milliseconds that will cause Max Timeout expiration (for Voice Unit, Listener, Prompt, DTMF, Prompt Queue).
babbleTimeout	Value	O	Indicates the value in milliseconds that will cause Babble Timeout expiration (for Listener).
endSilence	Value	O	Indicates the period in milliseconds for which the Listener will observe as an end of utterance marker or for which the DTMF will observe as end of input marker (for Listener, DTMF).
rejectionThreshold	Value	O	Indicates the value below which the Listener will raise the outcome under the Not Recognized as opposed to the Recognized Event (for Listener).
autoInterruptable	Boolean	O	Indicates whether the prompt will be automatically stopped by the activity of a Listener or a DTMF resource (for Prompt).

--`,,```,,,,````-`-`,,`,,`,`,,`---
© ISO/IEC 2007 – All rights reserved
Copyright International Organization for Standardization
Provided by IHS under license with ISO
No reproduction or networking permitted without license from IHS
Not for Resale

Table 26-91 Voice Attribute Changed—Event Parameters (continued)

Parameter Name	Type	M/ O/C	Description
innerXML	Characters	O	Indicates the Speech Synthesis Markup Language document the Prompt is rendering (for Prompt).
interdigitTimeout	Value	O	Indicates the timeout value in milliseconds that will cause inter-digit timeout expiration (for DTMF).
preflush	Boolean	O	preflush - the boolean flag indicating whether DTMF will always clear up its buffer before interaction starts.
cause	EventCause	O	Indicates the reason for the event.
security	CSTASecurityData	O	Indicates timestamp information, message sequence number, and security information.
privateData	CSTAPrivateData	O	Indicates the non-standardized information attached to the event.

26.2.17.2 Event Causes

Table 26-92 Voice Attribute Changed—Event Causes

Event Cause	Description	Associated Features
Normal	A voice attribute of a message/resource has changed.	Set Voice Attribute

26.2.18 Voice Error Occurred

The Voice Error Occurred event indicates an error or exception has been encountered. This event indicates the resource has entered the Null resource state.

26.2.18.1 Event Parameters

Table 26-93 Voice Error Occurred—Event Parameters

Parameter Name	Type	M/ O/C	Description
monitorCrossRefID	MonitorCrossRefID	M	Associates the event to an established monitor.
overConnection	ConnectionID	M	Indicates the connection from which the event is generated.
resource	ResourceID	C	Indicates the interactive voice resource for this service. This parameter is required if there are multiple interactive voice resources per connection.
cause	EventCause	O	Indicates the reason for the event.
servicesPermitted	ServicesPermitted	O	Indicates a list of services that can be applied to the local connection.
security	CSTASecurityData	O	Indicates timestamp information, message sequence number, and security information.
privateData	CSTAPrivateData	O	Indicates the non-standardized information attached to the event.

© ISO/IEC 2007 – All rights reserved

Copyright International Organization for Standardization
Provided by IHS under license with ISO
No reproduction or networking permitted without license from IHS
Not for Resale

26.2.18.2 Event Causes

Table 26-94 Voice Error Occurred—Event Causes

Event Cause	Description	Associated Features
Activation	An attempt to activate or deactivate rules has failed	Start
BadAttribute	The attributes cannot be set	Set Voice Attribute
BadGrammar	A grammar cannot be compiled	Start
BadURI	An URI in the synthesis markup cannot be reached	Queue, Start
BadVoice	A voice attribute on the Prompt cannot be met for text to speech synthesis	Queue, Start
DuplicateDTMF	More than one DTMF has been started at the same time	Start
EarlyStop	An input device is stopped before exiting the Started state	Stop
EmptyQueue	An attempt to start an empty Prompt Queue has been detected	Start
InvalidConnection	The call is no longer at the device	any
InvalidConnectionState	The connection at the device has entered a state that halts the media flow, i.e., Queued, Failed, or Hold State	any
NoQueue	An attempt to insert a Prompt voice to the Prompt Queue has failed	Queue
Normal	A voice error has been detected - no specific error cause can be provided.	any
MaxTimeout	A Max timeout has been expired	Start
NoRule	No active rule is detected in the grammar	Start
NoAudioSaved	No audio can be saved for RetainAudio	Start

27 Call Detail Record (CDR) Services

This clause specifies the Call Detail Record (CDR) services.

27.1 Services

Table 27-1 CDR Services Summary

Service	Description	Pg.
27.1.1 Call Detail Records Notification	The Call Detail Records Notification service notifies the computing function that it should obtain the CDR information that has been stored by the switching function (by using the Send Stored Call Detail Records service).	589
27.1.2 Call Detail Records Report	The Call Detail Records Report service provides CDR information to the computing function.	590
27.1.3 Send Stored Call Detail Records	The Send Stored Call Detail Records service initiates the transfer of stored CDR information to the computing function.	595
27.1.4 Start Call Detail Records Transmission	The Start Call Detail Records Transmission service starts the transmission of CDR information.	596
27.1.5 Stop Call Detail Records Transmission	The Stop Call Detail Records Transmission service cancels a previously initiated Call Detail Records Transmission.	598

© ISO/IEC 2007 – All rights reserved

Copyright International Organization for Standardization
Provided by IHS under license with ISO
No reproduction or networking permitted without license from IHS
Not for Resale

27.1.1 Call Detail Records Notification

S ⟶ C

The Call Detail Records Notification service notifies the computing function that it should obtain the CDR information that has been stored in the switching function.

The Send Stored Call Detail Records service should be used to obtain the CDR information.

27.1.1.1 Service Request

Table 27-2 Call Detail Records Notification—Service Request

Parameter Name	Type	M/ O/C	Description
cdrCrossRefID	CDRCrossRefID	M	Specifies the CDR cross reference identifier.
cdrReason	Enumerated	O	Specifies the reason for sending the service. The complete set of possible values is: • timeout - a timeout has occurred in the switching function • thresholdReached - a threshold reached condition has occurred in the switching function • other - any other reason
security	CSTASecurityData	O	Specifies timestamp information, message sequence number, and security information.
privateData	CSTAPrivateData	O	Specifies non-standardized information.

27.1.1.2 Service Response

This service follows the atomic acknowledgement model for this service request.

27.1.1.2.1 Positive Acknowledgement

Table 27-3 Call Detail Records Notification—Positive Acknowledgement

Parameter Name	Type	M/ O/C	Description
security	CSTASecurityData	O	Specifies timestamp information, message sequence number, and security information.
privateData	CSTAPrivateData	O	Specifies non-standardized information.

27.1.1.2.2 Negative Acknowledgement

The negative acknowledgement error codes are described in 12.2.14, “ErrorValue”, on page 115.

27.1.1.3 Operational Model

27.1.1.3.1 Connection State Transitions

There are no connection state changes due to this service.

27.1.1.3.2 Device-Type Monitoring Event Sequences

There are no events generated as a result of this service.

© ISO/IEC 2007 – All rights reserved

27.1.1.3.3 Call-Type Monitoring Event Sequences

There are no events generated as a result of this service.

27.1.1.3.4 Functional Requirements

1. This service is used if a previous Start Call Detail Records Transmission service has specified that the switching function should store CDR information until requested by the computing function (transferMode of transferOnRequest or transferOnThresholdReached) and when a threshold reached condition or a timeout has occurred in the switching function, as indicated in the cdrReason parameter.

27.1.2 Call Detail Records Report

S → C

The Call Detail Records Report service provides call detail information for one or more calls.

This information may be used to derive charging information, statistic purposes, etc.

27.1.2.1 Service Request

Table 27-4 Call Detail Records Report—Service Request

Parameter Name	Type	M/ O/C	Description
cdrCrossRefID	CDRCrossRefID	M	Specifies the CDR cross reference identifier.
numberOfRecordsSent	Value (1..128)	M	Specifies the number of call detail records that are provided in this service.

--`,,```,,,,````-`-`,,`,,`,`,,`---

© ISO/IEC 2007 – All rights reserved

Copyright International Organization for Standardization
Provided by IHS under license with ISO
No reproduction or networking permitted without license from IHS

Not for Resale

Table 27-4 Call Detail Records Report—Service Request (continued)

Parameter Name	Type	M/ O/C	Description

cdrInfo	List of Structures	M	Specifies a list CDR information. Each entry in the list consists of the following components:
			• recordNumber (O) Value (1..128) - Indicates the record number, if more that one record is sent.
			• recordCreationTime (M) TimeInfo - Indicates the time that the CDR record was created.
			• callingDevice (O) CallingDeviceID - Indicates the calling device.
			• calledDevice (O) CalledDeviceID - Indicates the called device.
			• associatedCallingDevice (O) AssociatedCallingDeviceID - Indicates the Network Interface Device (trunk, for example) associated with the calling device.
			• associatedCalledDevice (O) AssociatedCalledDeviceID - Indicates the Network Interface Device (trunk, for example) associated with the called device.
			• networkCallingDevice (O) NetworkCallingDeviceID - Indicates the calling device that was provided by the network.
			• networkCalledDevice (O) NetworkCalledDeviceID - Indicates the called device that was provided by the network.
			• callCharacteristics (O) CallCharacteristics - Indicates the high level characteristics of the call (ACD, for example).
			• mediaCallCharacteristics (O) MediaCallCharacteristics - Specifies the media class (voice, digital data, etc.), connection rate, etc. of the call.
			• chargedDevice (O) Choice Structure- Indicates the charged device. Shall be one of the following choices:
			  • operator (DeviceID) - Indicates the DeviceID of the attendant.
			  • nonOperator (DeviceID) - Indicates the non-attendant DeviceID.
			• recordedCall (O) ConnectionID - Indicates the call for which the call details are recorded.
			• nodeNumber (O) List of Values - Indicates the originating node within a switching network. This consists of a list of values corresponding to areas:
			  • area0 (O) - area0
			  • area1 (O) - area1
			  • area2 (O) - area2
			• tariffTable (O) Value - Indicates the table to be used according to the network type characteristics (PSTN, ISDN, etc.).

© ISO/IEC 2007 – All rights reserved

Copyright International Organization for Standardization
Provided by IHS under license with ISO
No reproduction or networking permitted without license from IHS
Not for Resale

Table 27-4 Call Detail Records Report—Service Request (continued)

Parameter Name	Type	M/ O/C	Description

(continued)	(continued)		• connectionStart (O) TimeInfo - Indicates the date and time that the connection was created.
			• connectionEnd (O) TimeInfo - Indicates the date and time that the connection ended.
			• connectionDuration (O) Value - Indicates the duration of the connection, in tenths of seconds.
			• accessCode (O) Characters - Indicates the dialled access number (e.g. to differentiate between business or private external calls).
			• carrier (O) Value - Indicates the network that was used.
			• selectedRoute (O) Value - Indicates the route that was used.
			• billingIdentifier (O) Enumerated - Indicates the type of charging. The complete set of possible values is:
			  • normalCharging
			  • reverseCharging
			  • creditCardCharging
			  • callForwarding
			  • callDeflection
			  • callTransfer
			  • other
			• chargingInfo (O) ChargingInfo - Indicates the value of charging or currency units charged to a device in a call.
			• supplServiceInfo (O) Bitmap - Indicates the features (supplementary services) used. Multiple bits may be set. The possible values are:
			  • normalCall
			  • consultationCall
			  • transferCall
			  • callCompletion
			  • callForwarding
			  • callDiversion
			  • conferencing
			  • intrusion
			  • userUserInfo - indicates that user related information was exchanged during the call (e.g., public ISDN User to User signalling was used)
			  • other

© ISO/IEC 2007 – All rights reserved
Copyright International Organization for Standardization
Provided by IHS under license with ISO
No reproduction or networking permitted without license from IHS
Not for Resale

Table 27-4 Call Detail Records Report—Service Request (continued)

Parameter Name	Type	M/ O/C	Description

(continued)	(continued)		• reasonForTerm (O) Enumerated - Indicates the reason that the connection was terminated. The complete set of possible values is:
			  • normalClearing
			  • unsuccessfulCallAttempt
			  • abnormalTermination
			  • callTransferred
			  • other
			• authCode (O) AuthCode - Indicates the authorization code used to authorize the call.
			• accountInfo (O) AccountInfo - Indicates the account code used for the call.
			• deviceCategory (O) Enumerated - Indicates the device category (station, ACD device, etc.) of the charged device. The complete set of possible values is:
			  • ACD
			  • Group
			  • Network Interface (e.g., trunk, CO line)
			  • Park
			  • Routeing Device
			  • Station (default)
			  • Voice Unit
			  • Generic Interactive Voice
			  • Listener Interactive Voice
			  • DTMF Interactive Voice
			  • Prompt Interactive Voice
			  • Prompt Queue Interactive Voice
			  • Message Interactive Voice
			  • Other
			• namedDeviceTypes (O) Enumerated - Indicates the named device type of the charged device. The complete set of possible values are:
			  • ACD
			  • ACD Group
			  • Button
			  • Button Group
			  • Conference Bridge
			  • Line
			  • Line Group
			  • Operator
			  • Operator Group
			  • Parking Device
			  • Station
			  • Station Group
			  • Trunk
			  • Trunk Group
			  • Other
			  • Other Group
			• operatorDevice (O) DeviceID - Indicates the operator involved with the call.

© ISO/IEC 2007 – All rights reserved

Copyright International Organization for Standardization
Provided by IHS under license with ISO
No reproduction or networking permitted without license from IHS
Not for Resale

Table 27-4 Call Detail Records Report—Service Request (continued)

Parameter Name	Type	M/ O/C	Description
lastStoredCDRReportSent	Boolean	C	Specifies if this Call Detail Records Report is the last stored Call Detail Records Report that is being sent by the switching function as a result of a Send Stored Call Detail Records service. The complete set of possible values is: • True - this CDR report is the last stored report that is being sent. After this CDR report is sent, the switching function shall store additional CDR information until the information is requested via another Send Stored Call Detail Records service. • False - this CDR report is not the last stored report being sent. More stored CDR reports will be sent by the switching function. This parameter shall be provided if this service is the result of a Send Stored Call Detail Records service, otherwise it shall not be provided.
security	CSTASecurityData	O	Specifies timestamp information, message sequence number, and security information.
privateData	CSTAPrivateData	O	Specifies non-standardized information.

27.1.2.2 Service Response

This service follows the atomic acknowledgement model for this service request.

27.1.2.2.1 Positive Acknowledgement

Table 27-5 Call Detail Records Report—Positive Acknowledgement

Parameter Name	Type	M/ O/C	Description
security	CSTASecurityData	O	Specifies timestamp information, message sequence number, and security information.
privateData	CSTAPrivateData	O	Specifies non-standardized information.

27.1.2.2.2 Negative Acknowledgement

The negative acknowledgement error codes are described in 12.2.14, “ErrorValue”, on page 115.

27.1.2.3 Operational Model

27.1.2.3.1 Connection State Transitions

There are no connection state changes due to this service.

27.1.2.3.2 Device-Type Monitoring Event Sequences

There are no events generated as a result of this service.

27.1.2.3.3 Call-Type Monitoring Event Sequences

There are no events generated as a result of this service.

© ISO/IEC 2007 – All rights reserved

Copyright International Organization for Standardization
Provided by IHS under license with ISO
No reproduction or networking permitted without license from IHS
Not for Resale

27.1.2.3.4 Functional Requirements

1. This service is sent by the switching function when:
   - a Start Call Detail Records Transmission service has indicated the transferMode of transferAtEndOfCall in which case the value of the numberRecords parameter is one, or
   - a Start Call Detail Records Transmission service has indicated the transferMode of transferOnRequest or transferOnThresholdReached and a Send Stored Call Detail Records service has requested that the stored CDR records be sent.

27.1.3 Send Stored Call Detail Records C → S

The Send Stored Call Detail Records service initiates the en-bloc transfer of CDR information from the switching function for call records that have been stored by the switching function.

The service allows CDR information to be requested for a specific time period.

27.1.3.1 Service Request

Table 27-6 Send Stored Call Detail Records—Service Request

Parameter Name	Type	M/ O/C	Description
cdrCrossRefID	CDRCrossRefID	M	Specifies the CDR cross reference identifier.
timePeriod	List of TimeInfo	O	Specifies the time interval for which CDR information is being requested. This parameter consists of the following components: • beginningOfCDR (M) - specifies the start time • endOfCDR (M) - specifies the end time The time interval refers to the time that the CDR record was created (i.e., the recordCreationTime in the Call Detail Records Report service).
security	CSTASecurityData	O	Specifies timestamp information, message sequence number, and security information.
privateData	CSTAPrivateData	O	Specifies non-standardized information.

27.1.3.2 Service Response

This service follows the atomic acknowledgement model for this service request.

27.1.3.2.1 Positive Acknowledgement

Table 27-7 Send Stored Call Detail Records—Positive Acknowledgement

Parameter Name	Type	M/ O/C	Description
security	CSTASecurityData	O	Specifies timestamp information, message sequence number, and security information.
privateData	CSTAPrivateData	O	Specifies non-standardized information.

27.1.3.2.2 Negative Acknowledgement

The negative acknowledgement error codes are described in 12.2.14, “ErrorValue”, on page 115.

© ISO/IEC 2007 – All rights reserved

Copyright International Organization for Standardization
Provided by IHS under license with ISO
No reproduction or networking permitted without license from IHS
Not for Resale

27.1.3.3 Operational Model

27.1.3.3.1 Connection State Transitions

There are no connection state changes due to this service.

27.1.3.3.2 Device-Type Monitoring Event Sequences

There are no events generated as a result of this service.

27.1.3.3.3 Call-Type Monitoring Event Sequences

There are no events generated as a result of this service.

27.1.3.3.4 Functional Requirements

1. If the transferMode parameter in the Start Call Detail Records Transmission service has indicated transferOnRequest or transferOnThresholdReached, a Send Call Detail Records service request shall be sent when the computing function wants to retrieve the stored call detail information. It shall also be sent if the switching function has indicated, via the Call Detail Records Notification service, that the computing function should obtain the stored CDR information because of a threshold reached condition or timeout, for example.
2. If this service is positively acknowledged, the CDR information is sent to the computing function via the Call Detail Records Report service.
3. If the timePeriod parameter is not supported by the switch, all recorded Call Detail Records should be transmitted, which have not been previously transmitted to the computing function.

27.1.4 Start Call Detail Records Transmission C → S

The Start Call Detail Records Transmission service starts the collection, and optionally the transmission, of Call Detail Records.

The switching function either starts transmitting call detail information at the end of each call (or call segment) or it stores the CDR information until it is requested, as specified in the service request.

27.1.4.1 Service Request

Table 27-8 Start Call Detail Records Transmission—Service Request

Parameter Name	Type	M/ O/C	Description
transferMode	Enumerated	M	Specifies the mode of transmission. The complete set of possible modes is: • transferAtEndOfCall - specifies that the requested information shall be sent after the end of each call or call segment. • transferOnRequest - specifies that the requested information shall be stored in the switching function then sent en-bloc on explicit request. • transferOnThresholdReached - specifies that the requested information shall be stored in the switching function then sent en-bloc on explicit request, or when the switching function has determined that a threshold (high water mark) has been reached.

© ISO/IEC 2007 – All rights reserved

Copyright International Organization for Standardization
Provided by IHS under license with ISO
No reproduction or networking permitted without license from IHS
Not for Resale

Table 27-8 Start Call Detail Records Transmission—Service Request (continued)

Parameter Name	Type	M/ O/C	Description
security	CSTASecurityData	O	Specifies timestamp information, message sequence number, and security information.
privateData	CSTAPrivateData	O	Specifies non-standardized information.

27.1.4.2 Service Response

This service follows the atomic acknowledgement model for this service request.

27.1.4.2.1 Positive Acknowledgement

Table 27-9 Start Call Detail Records Transmission Service—Positive Acknowledgement

Parameter Name	Type	M/ O/C	Description
cdrCrossRefID	CDRCrossRefID	M	Specifies the CDR cross reference identifier.
security	CSTASecurityData	O	Specifies timestamp information, message sequence number, and security information.
privateData	CSTAPrivateData	O	Specifies non-standardized information.

27.1.4.2.2 Negative Acknowledgement

The negative acknowledgement error codes are described in 12.2.14, “ErrorValue”, on page 115.

27.1.4.3 Operational Model

27.1.4.3.1 Connection State Transitions

There are no connection state changes due to this service.

27.1.4.3.2 Device-Type Monitoring Event Sequences

There are no events generated as a result of this service.

27.1.4.3.3 Call-Type Monitoring Event Sequences

There are no events generated as a result of this service.

27.1.4.3.4 Functional Requirements

1. The cdrCrossRefID parameter is used to correlate subsequent CDR services back to the Start Call Detail Records Transmission service.
2. If the transferMode parameter is specified as transferAtEndOfCall, the switching function shall send the CDR information after the end of a call or call segment (after a call is transferred, for example).
3. If the transferMode parameter is specified as transferOnRequest, the switching function shall store the CDR information until explicitly requested via the Send Stored Call Detail Records service.
4. If the transferMode parameter is specified as transferOnThresholdReached, the switching function shall store the CDR information until explicitly requested via the Send Stored Call Detail Records service or when the switching function has determined that a threshold has been reached.

© ISO/IEC 2007 – All rights reserved

Copyright International Organization for Standardization
Provided by IHS under license with ISO
No reproduction or networking permitted without license from IHS
Not for Resale

27.1.5 Stop Call Detail Records Transmission

S ◄► C

The Stop Call Detail Records Transmission service is used to cancel a previously initiated Start Call Detail Records Transmission service.

A positive acknowledgement to the service request indicates that the CDR cross reference identifier used in the Start Call Detail Records Transmission service has become invalid.

Either the computing function or the switching function may issue the service.

27.1.5.1 Service Request

Table 27-10 Stop Call Detail Records Transmission—Service Request

Parameter Name	Type	M/ O/C	Description
cdrCrossRefID	CDRCrossRefID	M	Specifies the CDR cross reference identifier.
cdrTermReason	Enumerated	O	Specifies the reason to terminate call detail reports. The possible values are: • endOfDataDetected • errorDetected • thresholdReached • other This parameter shall not be provided if the service request is sent from the computing function.
security	CSTASecurityData	O	Specifies timestamp information, message sequence number, and security information.
privateData	CSTAPrivateData	O	Specifies non-standardized information.

27.1.5.2 Service Response

This service follows the atomic acknowledgement model for this service request.

27.1.5.2.1 Positive Acknowledgement

Table 27-11 Stop Call Detail Records Transmission Service—Positive Acknowledgement

Parameter Name	Type	M/ O/C	Description
security	CSTASecurityData	O	Specifies timestamp information, message sequence number, and security information.
privateData	CSTAPrivateData	O	Specifies non-standardized information.

27.1.5.2.2 Negative Acknowledgement

The negative acknowledgement error codes are described in 12.2.14, “ErrorValue”, on page 115.

27.1.5.3 Operational Model

27.1.5.3.1 Connection State Transitions

There are no connection state changes due to this service.

© ISO/IEC 2007 – All rights reserved

Copyright International Organization for Standardization
Provided by IHS under license with ISO
No reproduction or networking permitted without license from IHS
Not for Resale

27.1.5.3.2 Device-Type Monitoring Event Sequences

There are no events generated as a result of this service.

27.1.5.3.3 Call-Type Monitoring Event Sequences

There are no events generated as a result of this service.

27.1.5.3.4 Functional Requirements

1. The computing function may issue the Stop Call Detail Records Transmission service when it no longer wants to receive CDR information.
2. The switching function shall issue the service when it terminates a Call Detail Records Transmission and may supply a reason that the transmission was stopped.
3. Once the request has been positively acknowledged, the Call Detail Records Reports shall cease to be sent and the cdrCrossRefID shall be invalid.

28 Vendor Specific Extensions Services & Events

This clause consists of:

- Escape Registration Services
- Escape Services
- Private Events

28.1 Registration Services

Table 28-1 Escape Registration Services Summary

Escape Registration Service	Description	Pg.
28.1.1 Escape Register	Registers the computing function for escape services with the switching function.	599
28.1.2 Escape Register Abort	Indicates that the switching function has terminated an escape service registration.	600
28.1.3 Escape Register Cancel	Unregisters the computing function for escape services with the switching function.	601

28.1.1 Escape Register

C → S

The Escape Register service is used by the computing function to register to receive escape services from the switching function. The computing function may be required to register for escape services before it can receive any Escape service requests from the switching function.

28.1.1.1 Service Request

Table 28-2 Escape Register—Service Request

Parameter Name	Type	M/ O/C	Description
security	CSTASecurityData	O	Specifies timestamp information, message sequence number, and security information.
privateData	CSTAPrivateData	O	Specifies non-standardized information.

© ISO/IEC 2007 – All rights reserved

Copyright International Organization for Standardization
Provided by IHS under license with ISO
No reproduction or networking permitted without license from IHS
Not for Resale

28.1.1.2 Service Response

This service follows the atomic acknowledgement model for this service request.

28.1.1.2.1 Positive Acknowledgement

Table 28-3 Escape Register—Positive Acknowledgement

Parameter Name	Type	M/ O/C	Description
escapeRegisterID	EscapeRegisterID	M	Specifies the escape registration identifier for this registration.
security	CSTASecurityData	O	Specifies timestamp information, message sequence number, and security information.
privateData	CSTAPrivateData	O	Specifies non-standardized information.

28.1.1.2.2 Negative Acknowledgement

The negative acknowledgement error codes are described in 12.2.14, “ErrorValue”, on page 115.

28.1.1.3 Operational Model

28.1.1.3.1 Connection State Transitions

There are no connection state changes due to this service.

28.1.1.3.2 Device-Type Monitoring Event Sequences

There are no events generated as a result of this service.

28.1.1.3.3 Call-Type Monitoring Event Sequences

There are no events generated as a result of this service.

28.1.1.3.4 Functional Requirements

1. The escapeRegisterID parameter returned in the positive acknowledgement is used to identify the registration over which escape services will be sent. The escapeRegisterID is also used when cancelling the escape registration.
2. The number of simultaneous escape registrations allowed is switching function dependent. When the limit is reached, subsequent Escape Register service requests shall result in negative acknowledgements from the switching function.

28.1.2 Escape Register Abort

S → C

The Escape Register Abort service is used by the switching function to asynchronously cancel an active escape registration. This service invalidates a current escape registration.

© ISO/IEC 2007 – All rights reserved

Copyright International Organization for Standardization
Provided by IHS under license with ISO
No reproduction or networking permitted without license from IHS
Not for Resale

28.1.2.1 Service Request

Table 28-4 Escape Register Abort—Service Request

Parameter Name	Type	M/ O/C	Description
escapeRegisterID	EscapeRegisterID	M	Specifies the escape registration identifier for the escape registration that was aborted.
security	CSTASecurityData	O	Specifies timestamp information, message sequence number, and security information.
privateData	CSTAPrivateData	O	Specifies non-standardized information.

28.1.2.2 Service Response

There are no service completion conditions for this service.

28.1.2.2.1 Positive Acknowledgement

There is no positive acknowledgement defined for this service.

28.1.2.2.2 Negative Acknowledgement

The negative acknowledgement error codes are described in 12.2.14, “ErrorValue”, on page 115.

28.1.2.3 Operational Model

28.1.2.3.1 Connection State Transitions

There are no connection state changes due to this service.

28.1.2.3.2 Device-Type Monitoring Event Sequences

There are no events generated as a result of this service.

28.1.2.3.3 Call-Type Monitoring Event Sequences

There are no events generated as a result of this service.

28.1.2.3.4 Functional Requirements

1. The switching function may issue this service at any time when it can no longer maintain the escape registration (e.g. when the vendor-specific extensions are no longer available).
2. The computing function may send a negative acknowledgement to this service request, but no positive acknowledgement is defined.

28.1.3 Escape Register Cancel

C ⟶ S

The Escape Register Cancel service is used to cancel a previous escape registration. This request terminates the escape registration and the computing function receives no further escape service requests for that escape registration once it receives the positive acknowledgement to the Escape Register Cancel request.

© ISO/IEC 2007 – All rights reserved

Copyright International Organization for Standardization
Provided by IHS under license with ISO
No reproduction or networking permitted without license from IHS
Not for Resale

28.1.3.1 Service Request

Table 28-5 Escape Register Cancel—Service Request

Parameter Name	Type	M/ O/C	Description
escapeRegisterID	EscapeRegisterID	M	Specifies the escape registration identifier for which the escape registration is to be cancelled.
security	CSTASecurityData	O	Specifies timestamp information, message sequence number, and security information.
privateData	CSTAPrivateData	O	Specifies non-standardized information.

28.1.3.2 Service Response

This service follows the atomic acknowledgement model for this service request.

28.1.3.2.1 Positive Acknowledgement

Table 28-6 Escape Register Cancel—Positive Acknowledgement

Parameter Name	Type	M/ O/C	Description
security	CSTASecurityData	O	Specifies timestamp information, message sequence number, and security information.
privateData	CSTAPrivateData	O	Specifies non-standardized information.

28.1.3.2.2 Negative Acknowledgement

The negative acknowledgement error codes are described in 12.2.14, “ErrorValue”, on page 115.

28.1.3.3 Operational Model

28.1.3.3.1 Connection State Transitions

There are no connection state changes due to this service.

28.1.3.3.2 Device-Type Monitoring Event Sequences

There are no events generated as a result of this service.

28.1.3.3.3 Call-Type Monitoring Event Sequences

There are no events generated as a result of this service.

28.1.3.3.4 Functional Requirements

1. The computing function shall continue to process outstanding escape service requests from the switching function until it receives a positive acknowledgement for the Escape Register Cancel service request. The switching function shall not send any further escape service requests for a registration once it has sent the positive acknowledgement.

--`,,```,,,,````-`-`,,`,,`,`,,`---
© ISO/IEC 2007 – All rights reserved
Copyright International Organization for Standardization
Provided by IHS under license with ISO
No reproduction or networking permitted without license from IHS
Not for Resale

28.2 Services

Table 28-7 Escape Services Summary

Escape Service	Description	Pg.
28.2.1 Escape	Provides a mechanism to send a non-standardized feature.	603
28.2.2 Private Data Version Selection	Provides the switching function with the selected version for private data.	604

28.2.1 Escape

C ◄► S

The Escape service is used by an implementation to send a non-standardized (implementation specific) feature using the CSTA protocol. This service shall not be used for features that can be invoked with standardized services.

The Escape service allows an implementation to “escape” from standard operations in order to exploit some special feature of an implementation. This mechanism also allows manufacturers to experiment with new features that may, at a later date, become standardized.

28.2.1.1 Service Request

Table 28-8 Escape—Service Request

Parameter Name	Type	M/ O/C	Description
escapeRegisterID	EscapeRegisterID	C	Specifies the escape registration identifier associated with the escape registration for this request. This parameter is mandatory if the switching function is issuing the request and supports escape registration, and shall not be provided otherwise.
security	CSTASecurityData	O	Specifies timestamp information, message sequence number, and security information.
privateData	CSTAPrivateData	M	Specifies the non-standardized information.

28.2.1.2 Service Response

This service follows the atomic acknowledgement model for this service request.

28.2.1.2.1 Positive Acknowledgement

Table 28-9 Escape—Positive Acknowledgement

Parameter Name	Type	M/ O/C	Description
security	CSTASecurityData	O	Specifies timestamp information, message sequence number, and security information.
privateData	CSTAPrivateData	O	Specifies non-standardized information.

28.2.1.2.2 Negative Acknowledgement

The negative acknowledgement error codes are described in 12.2.14, “ErrorValue”, on page 115.

© ISO/IEC 2007 – All rights reserved

Copyright International Organization for Standardization
Provided by IHS under license with ISO
No reproduction or networking permitted without license from IHS
Not for Resale

28.2.1.3 Operational Model

28.2.1.3.1 Connection State Transitions

There are no connection state changes due to this service.

28.2.1.3.2 Device-Type Monitoring Event Sequences

There are no events generated as a result of this service.

28.2.1.3.3 Call-Type Monitoring Event Sequences

There are no events generated as a result of this service.

28.2.1.3.4 Functional Requirements

1. The privateData parameter in the service request shall be used to provide the non-standardized feature information (feature specific parameters, for example).
2. The privateData parameter in the positive acknowledgement shall be used, if necessary, to provide feature specific response information.
3. Although there are no connection state transitions or events specified by this service, the non-standardized feature requested via this service may cause some implementation-specific connection state change(s) or event(s) to occur.
4. The Escape service shall use ASN.1 (Abstract Syntax Notation) Object Identifiers.

28.2.2 Private Data Version Selection C → S

The Private Data Version Selection service provides the switching function with the selected version for Private Data.

28.2.2.1 Service Request

Table 28-10 Private Data Version Selection—Service Request

Parameter Name	Type	M/ O/C	Description
privateDataVersion	Value	M	Represents the version number to be used for future Private Data. A value of 0 means Private Data is not to be used.

28.2.2.2 Service Response

This service follows the atomic acknowledgement model for this service request.

28.2.2.2.1 Positive Acknowledgement

Table 28-11 Private Data Version Selection—Positive Acknowledgement

Parameter Name	Type	M/ O/C	Description
security	CSTASecurityData	O	Specifies timestamp information, message sequence number, and security information.
privateData	CSTAPrivateData	O	Specifies non-standardized information.

© ISO/IEC 2007 – All rights reserved

Copyright International Organization for Standardization
Provided by IHS under license with ISO
No reproduction or networking permitted without license from IHS
Not for Resale

28.2.2.2.2 Negative Acknowledgement

The negative acknowledgement error codes are described in 12.2.14, “ErrorValue”, on page 115.

28.2.2.3 Operational Model

28.2.2.3.1 Connection State Transitions

There are no connection state changes due to this service.

28.2.2.3.2 Device-Type Monitoring Event Sequences

There are no events generated as a result of this service.

28.2.2.3.3 Call-Type Monitoring Event Sequences

There are no events generated as a result of this service.

28.2.2.3.4 Functional Requirements

1. The computing function shall choose one of the private data version number(s) supported by the switching function (or if it does not want the switching function to provide private data, it should provide a value of 0). The computing function may obtain the list of private data versions:
   a. in the response to the Get Switching Function Capability service and
   b. in the ACSE Association Information provided by the switching function.
2. This service should not be issued before the first Get Switching Function Capabilities acknowledgement has been received by the computing function, unless the switching function has provided its supported private data version numbers in the ACSE Association Information.

28.3 Events

Table 28-12 Private Events Summary

Private Event	Description	Pg.
28.3.1 Private Event	Provides a mechanism to send implementation-specific extended information event.	605

28.3.1 Private Event

The Private Event is used by an implementation to send unsolicited, non-standardized (implementation specific) event information using the CSTA protocol. The Private Event shall not be used to convey event information that can be reported with standardized events.

The Private Event allows an implementation to exploit some special feature of an implementation.

28.3.1.1 Event Parameters

Table 28-13 Private Event—Event Parameters

Parameter Name	Type	M/ O/C	Description
monitorCrossRefID	MonitorCrossRefID	M	Associates the event to an established monitor.
security	CSTASecurityData	O	Specifies timestamp information, message sequence number, and security information.

© ISO/IEC 2007 – All rights reserved
-`,,```,,,,````-`-`,,`,,`,`,,`---

Copyright International Organization for Standardization
Provided by IHS under license with ISO
No reproduction or networking permitted without license from IHS
Not for Resale

Table 28-13 Private Event—Event Parameters (continued)

Parameter Name	Type	M/ O/C	Description
privateData	CSTAPrivateData	M	Specifies the non-standardized information.

28.3.1.2 Functional Requirements

1. The privateData parameter shall be used to provide the non-standardized event information (feature specific parameters, for example).
2. The type of monitors (i.e., device-type or call-type) for which this event is reported is switching function implementation specific.

© ISO/IEC 2007 – All rights reserved

Copyright International Organization for Standardization
Provided by IHS under license with ISO
No reproduction or networking permitted without license from IHS
Not for Resale

Annex A
(normative)

Device Appearances

This annex describes the types of appearances supported by CSTA devices and their associated behaviour. For an introduction to logical elements and appearances, refer to 6.1.1.2, “Logical Element”, on page 18.

The type of appearance is based on its relationship with other devices. The type of appearance plays a great role in determining the functionality and behaviour associated with the logical element of the device. There are two types of appearances:

- *Standard* Appearance (see A.1)
- *Bridged* Appearance (see A.2)

The following notation is used in the figures throughout this Annex.

D	represents another device
L	represents the identifiers for the logical elements
A	represents an appearance of a logical element

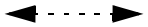

indicates that there is an interaction and/or association between the elements or components of an element.

A.1 Standard Appearance

A standard appearance of a device’s logical element is not associated with other devices (i.e., cannot handle calls at another device). When a call arrives at the logical element, standard appearances are selected according to their behaviour:

- Selected-Standard Appearance (see A.1.1)
- Basic-Standard Appearance (see A.2.1)

In addition, all media streams associated with calls corresponding to the appearances are only available to the physical element of the device (if it has one). This type of appearance can be either addressable or non-addressable. Refer to Clause 10, “CSTA Device Identifier Formats”, on page 97 for information on how to reference this appearance. When a call activity at one appearance results in the need for another appearance (i.e., the appearance puts the call on hold and wants to allow for the initiation of another call from the logical element), the logical element will use one of the available appearance (i.e., idle). If an available appearance is not present, the call will not be accepted by the logical element.

A.1.1 Selected-Standard Appearance

When calls are presented to the logical element, an available (i.e., idle) appearance is selected and only that appearance is presented with the call. From that point on, the handling of the call does not have any special characteristics or behaviours. Figure A-1 illustrates selected-standard appearances. In this example, the logical element is **L** and it has three addressable selected-standard appearances (**A1, A2, A3**). A call is currently

© ISO/IEC 2007 – All rights reserved

Copyright International Organization for Standardization
Provided by IHS under license with ISO
No reproduction or networking permitted without license from IHS
Not for Resale

being handled by appearance **A3**. When a new call (call 2) is presented to the logical element, it selects one of the available appearances (**A2**) to handle the call.

Figure A-1 Selected-Standard Appearances

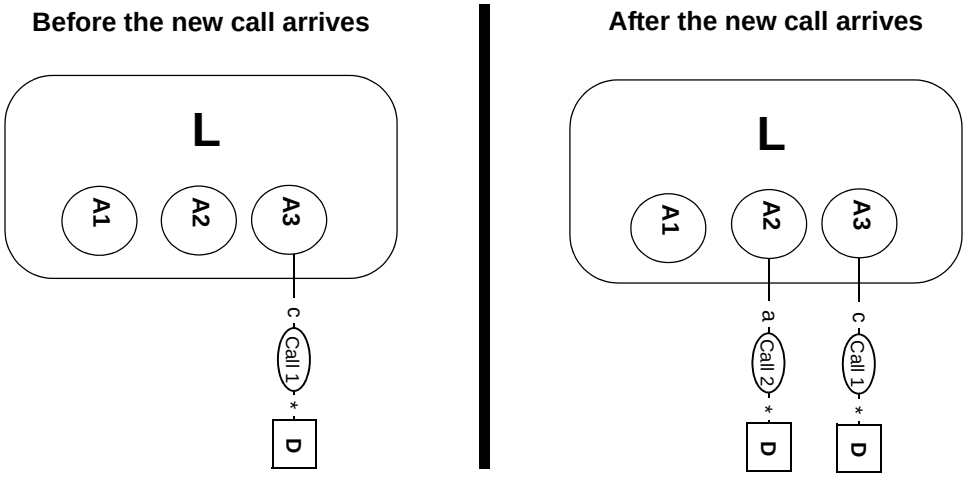

A.1.2 Basic-Standard Appearance

When calls are presented to the logical element, each available (i.e., idle) appearance is presented with the call. When the call is answered by one of the appearances (i.e., the associated connection state has transitioned to the connected state), the other appearances are cleared from the call. From that point on, the handling of the call does not have any special characteristics or behaviours. The appearances that were cleared from the call can then be used to process other call and call-related activities associated with the logical element. Figure A-2 illustrates basic-standard appearances. In this example, the logical element is **L** and it has three addressable basic-standard appearances (**A1**, **A2**, **A3**). A call is currently being handled by appearance **A3**. When a new call (call 2) is presented to the logical element, it presented to all available appearances (**A2**, **A1**). Appearance **A2** answers the call and appearance **A1** is cleared.

Figure A-2 Basic-Standard Appearances

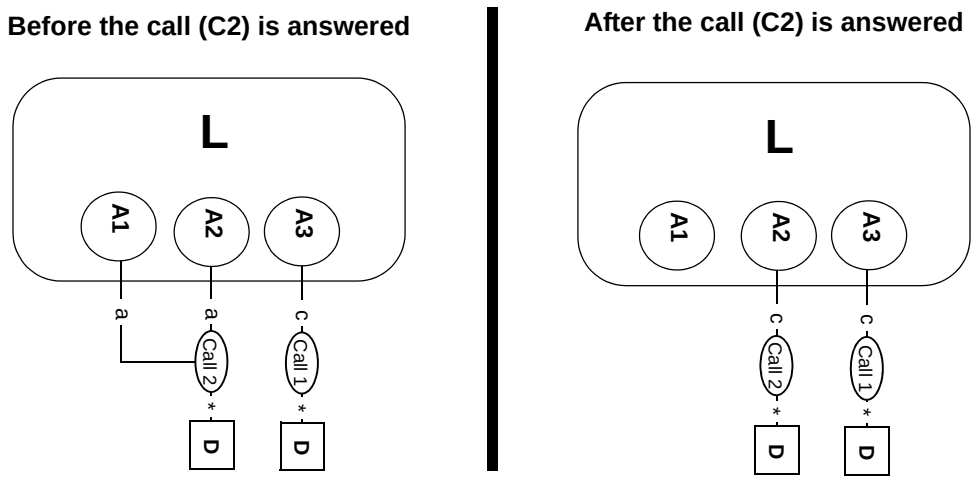

A.2 Bridged Appearance

A bridged appearance of a device's logical element may be associated with other devices that have a physical element (i.e., can handle calls at another device).

© ISO/IEC 2007 – All rights reserved

Copyright International Organization for Standardization
Provided by IHS under license with ISO
No reproduction or networking permitted without license from IHS
Not for Resale

A bridged appearance is a particular implementation of a shared logical element. Note that *associated* in the context of appearances means a relationship between a specific call appearance of a logical element and a device. A call appearance that is associated with a device implies that the call is physically handled at the device's physical element through this call appearance (e.g., makes use of the physical element's auditory apparatus).

These appearances can not be associated with devices that only have a logical element. When a call arrives at the logical element, bridged call appearances are simultaneously selected. Subsequent different behaviours are possible:

- Basic-Bridged (see)
- Exclusive-Bridged (see)
- Shared-Bridged (see)

This type of appearance can be either addressable or non-addressable. Refer to Clause 10, "CSTA Device Identifier Formats", on page 97 for information on how to reference this appearance.

When the appearance is addressable, the association between the appearance and the other device is one to one but the other device may have multiple bridged appearances associated with it. Changes in this association are reflected by the capabilities exchange services (13.1 beginning on page 149). In addition, all media streams associated with calls corresponding to this appearance are only available to the physical element (of the other device that is associated with this appearance).

When the appearance is non-addressable, the association between the appearance and the other device is one to one as long as a call is present at the appearance (i.e., a different device may be associated with this appearance every time a call is present). As a result, the media stream associated with the call is only available to the other device that was assigned to the particular appearance for the call. When a call activity at one appearance results in the need for another appearance (i.e., the appearance puts the call on hold and wants to allow for the initiation of another call from the logical element), the logical element will use one of the available appearance (i.e., idle) at the associated device. If an available appearance at the associated device is not present, the call will not be accepted by the logical element.

A.2.1 Basic-Bridged

When calls are presented to the logical element, each available (i.e., idle) appearance is presented with the call. When the call is answered by one of the appearances (i.e., the associated connection state has transitioned to the connected state), the other appearances are cleared from the call. From that point on, the handling of the call does not have any special characteristics or behaviours. The appearances that were cleared from the call can then be used to process other call and call-related activities associated with the logical element. Figure illustrates basic-bridged appearances. In this example, the logical element is **L** and it has three addressable basic-bridged appearances (**A1**, **A2**, **A3**). When a new call (call 1) is presented to the logical element, it is presented to all available appearances (**A1, A2, A3**). Appearance **A2** answers the call and appearances **A3** and **A1** are cleared.

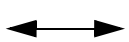

The arrows indicates that the particular bridged appearance of the logical element is associated with the corresponding device.

Copyright International Organization for Standardization
Provided by IHS under license with ISO
No reproduction or networking permitted without license from IHS Not for Resale

Figure A-3 Basic-Bridged Appearances

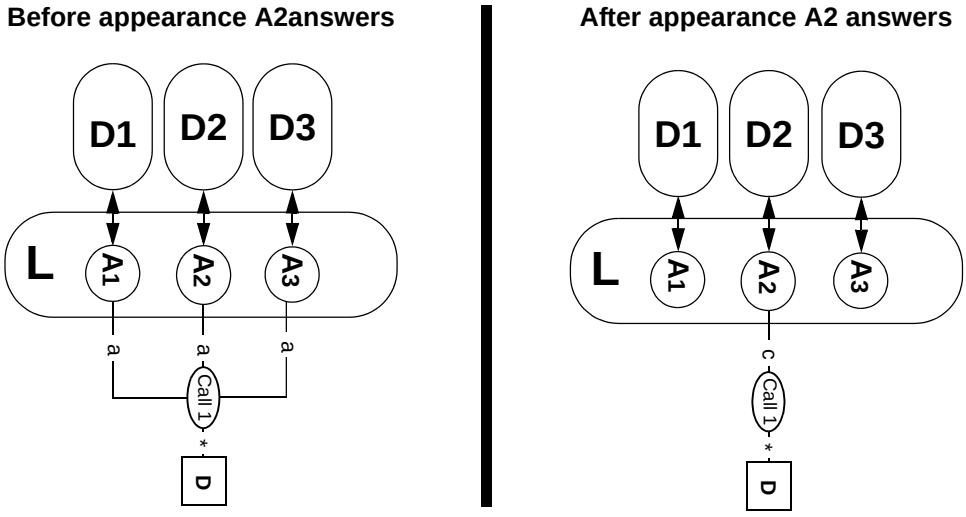

A.2.2 Exclusive-Bridged

When calls are presented to the logical element, each available (i.e., idle) appearance is presented with the call. When the call is answered by one of the appearances (i.e., the associated connection state has transitioned to the connected state), the other appearances are blocked from being used (i.e., the associated connection state is transitioned to the Failed state) until the connection that answered the call is cleared or the call is moved away. At which time, the connections in the Failed state are cleared. Otherwise, the handling of the call does not have any special characteristics or behaviours. Figure A-4 illustrates exclusive-bridged appearances. In this example, the logical element is **L** has three addressable exclusive-bridged appearances (**A1, A2, A3**). When a new call (call 1) is presented to the logical element, it presented to all available appearances (**A1, A2, A3**). Appearance **A2** answers the call and appearances **A1** and **A3** are blocked.

Figure A-4 Exclusive-Bridged Appearances

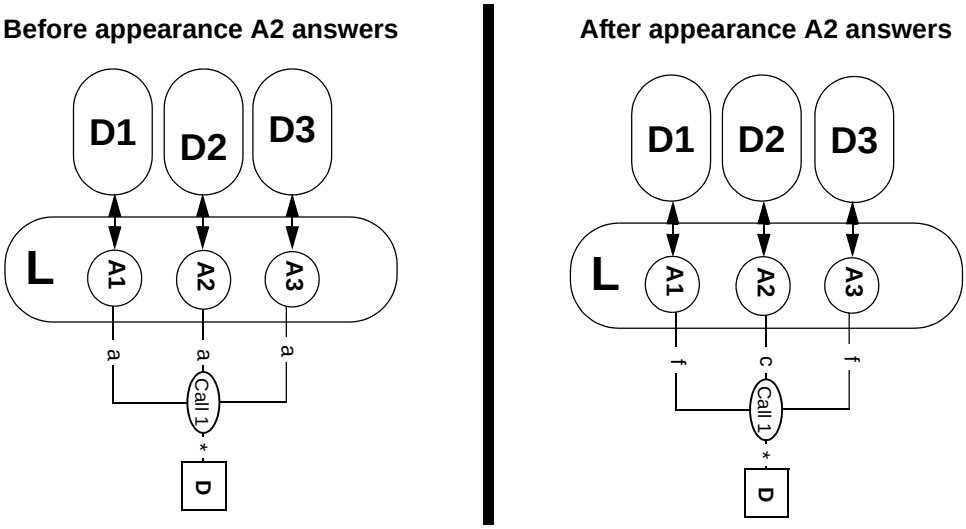

When the connected appearance places the call on hold, all other appearances will transition to the hold state. If all appearances are in the hold state and one of appearances retrieves the call, then the appearance retrieving the call will transition to the connected state and the other appearances will transition to the blocked from use mode (i.e., the associated connection state is transitioned to the Failed state). Figure A-5 illustrates this behaviour of exclusive-bridged appearances (Note that this is a continuation of the illustration above). Appearance **A2** places the call on hold while appearances **A2** and **A3** are in the blocked from use mode.

© ISO/IEC 2007 – All rights reserved

Copyright International Organization for Standardization
Provided by IHS under license with ISO
No reproduction or networking permitted without license from IHS
Not for Resale

Figure A-5 Exclusive-Bridged Appearances (Continuation of Figure A-4)

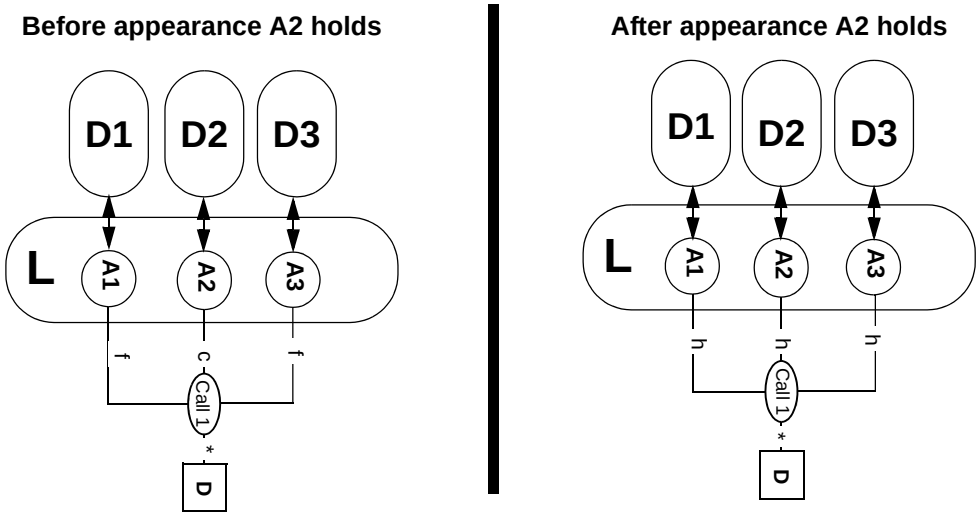

A.2.3 Shared-Bridged

This is the most common form of bridged appearances. When calls are presented to the logical element, each available (i.e., idle) appearance is presented with the call. When the call is answered by one of the appearances (i.e., the associated connection state has transitioned to the connected state), the other appearances enter an inactive mode (i.e., the associated connection state transitions to the queued state) until one of the following actions happen:

- They connect to the call.
- The call is ended.
- They are permanently cleared from the call through some feature/service.
- The call moves away from the device and none of the appearances are connected into the call.

Figure A-6 illustrates this behaviour of shared-bridged appearances. In this example, the logical element is **L** and it has three addressable shared-bridged appearances (**A1, A2, A3**). When a new call (call 1) is presented to the logical element, it presented to all available appearances (**A1, A2, A3**). Appearance **A2** answers the call and appearances **A1** and **A3** are made inactive.

Figure A-6 Shared-Bridged Appearances

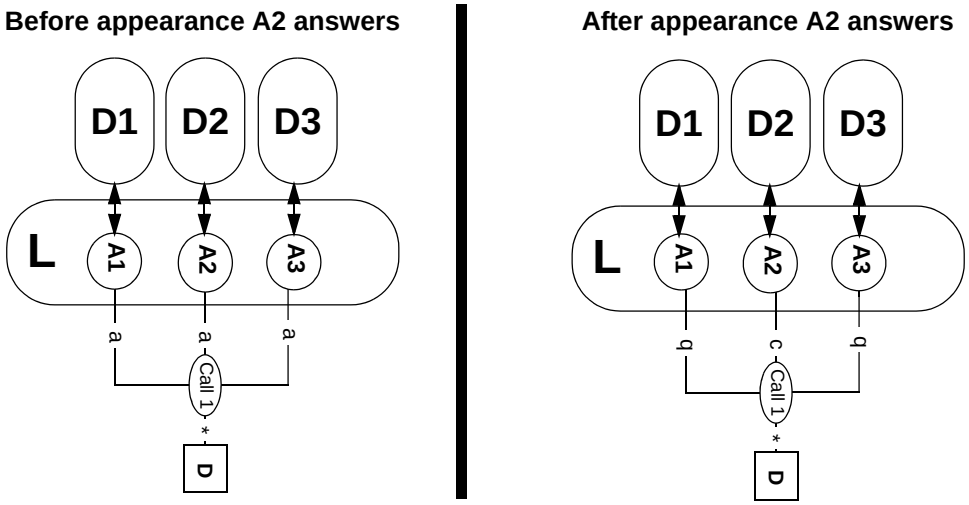

Copyright International Organization for Standardization
Provided by IHS under license with ISO
No reproduction or networking permitted without license from IHS
Not for Resale

The significant behaviour of shared-bridged appearances is that any appearance can join and/or clear from the call at any time up to a switching function limit on the number of appearances connected on the call. As long as at least one of the appearances remains connected to the call, all of the other appearances retain the ability to join the call. The Answer Call model is used to inform the computing function of appearances joining the call (Established Events). When an appearance clears from the call (with other appearances still connected), the appearance is returned to the inactive mode (i.e., the associated connection state transitions to the queued state). The call ends when all of the appearances clear from the call (i.e., all associated connection states transition to the queued state). Figure A-7 illustrates this behaviour of shared-bridged appearances (Note that this is a continuation of the illustration above). In this case, appearance **A1** adds to and clears from the call while appearance **A2** remains in the call.

Figure A-7 Shared-Bridged Appearances (Continuation of Figure A-6)

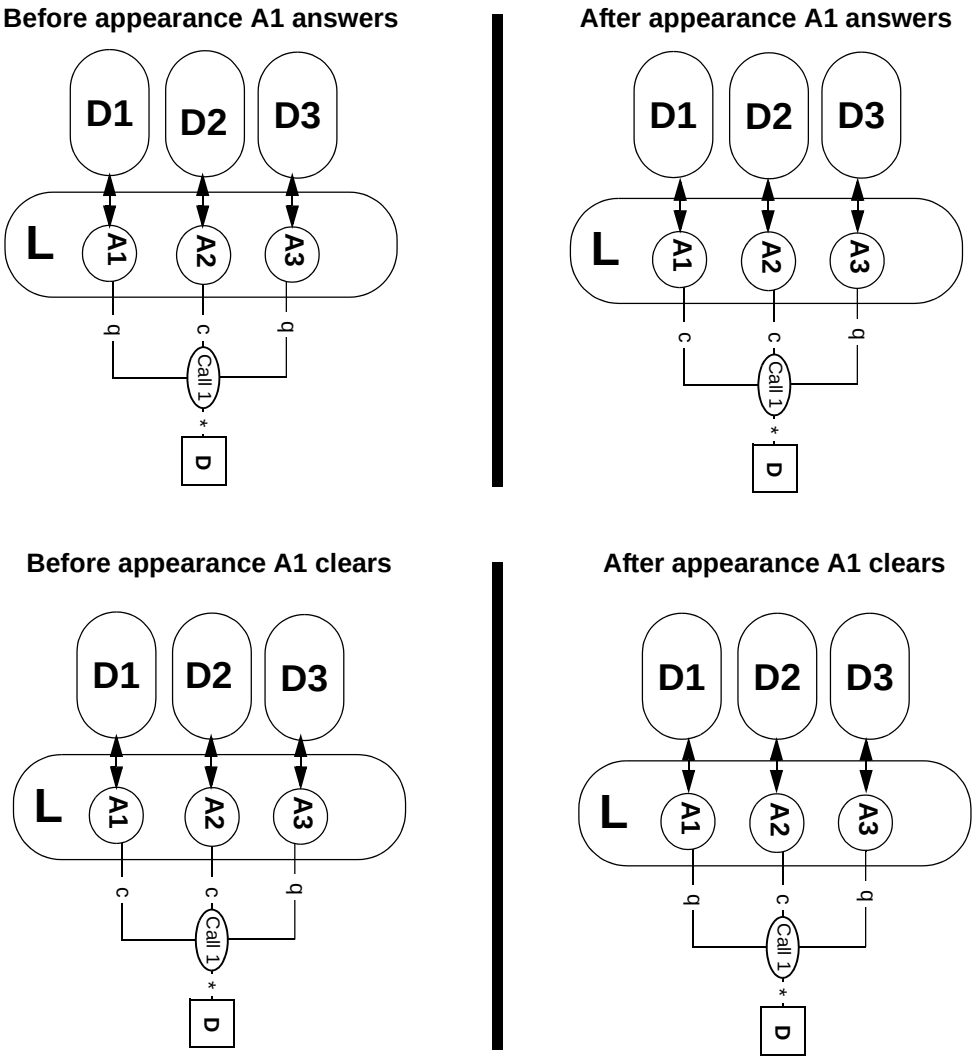

When the call is moved away from an appearance or an appearance places the call on hold, the shared-bridged appearance type becomes two types:

- *Independent-shared-bridged* - When the call is moved away from the logical element by one of the appearances, the other appearances are unaffected, as long as one appearance remains connected in the call, otherwise all appearances are cleared from the call. As for the appearance moving the call, it will return to the inactive mode (if another appearance remains connected in the call). Figure A-8 illustrates this behaviour of independent-shared-bridged appearances (Note that this is a continuation of the illustration above). In case one, appearance **A2** immediately transfers the call to another device while

© ISO/IEC 2007 – All rights reserved
Copyright International Organization for Standardization
Provided by IHS under license with ISO
No reproduction or networking permitted without license from IHS
Not for Resale

appearance **A1** remains in the call. In case two, appearance **A2** immediately transfers the call to another device while all appearances **A1** and **A3** are in the inactive mode.

Figure A-8 Independent-Shared-Bridged Appearances

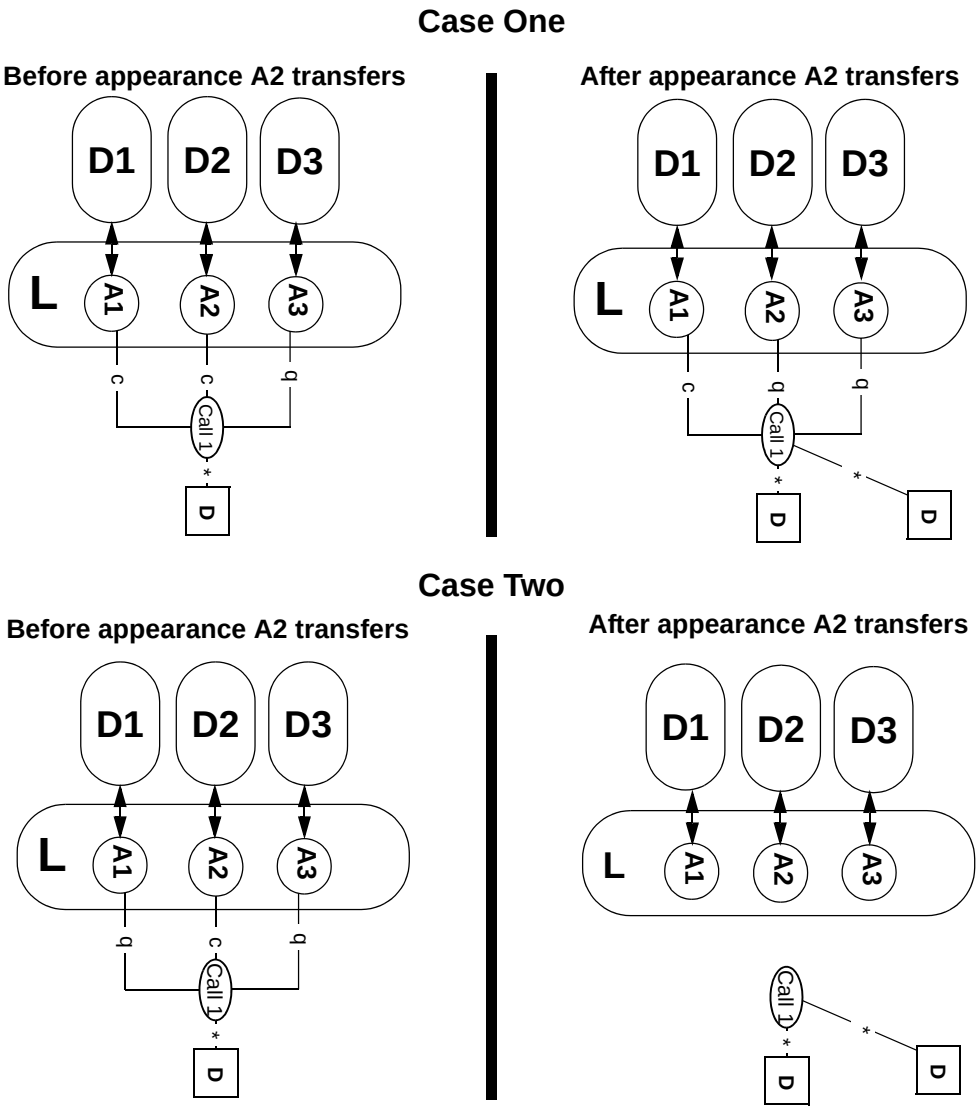

When one of the appearances places the call on hold and at least one other appearance is connected in the call, only the holding appearance will transition to the hold state (i.e., the other appearances are unaffected). When one of the appearances places the call on hold and the holding appearance was the only one connected in the call, all other appearances will transition to the hold state. If all appearances are in the hold state and one of appearances retrieves the call, then the appearance retrieving the call will transition to the connected state and the other appearances will transition to the inactive mode. Figure A-9 illustrates this behaviour of independent-shared-bridged appearances (Note that this is a continuation of the illustration above). In case one, appearance **A2** places the call on hold while appearance **A1** remains in the call. In case two, appearance **A2** places the call on hold while all appearances **A2** and **A3** are in the inactive mode.

© ISO/IEC 2007 – All rights reserved

Copyright International Organization for Standardization
Provided by IHS under license with ISO
No reproduction or networking permitted without license from IHS
Not for Resale

Figue A-9 Independent-Shared-Bridged Appearances (Continuation of Figure A-8)

Case One

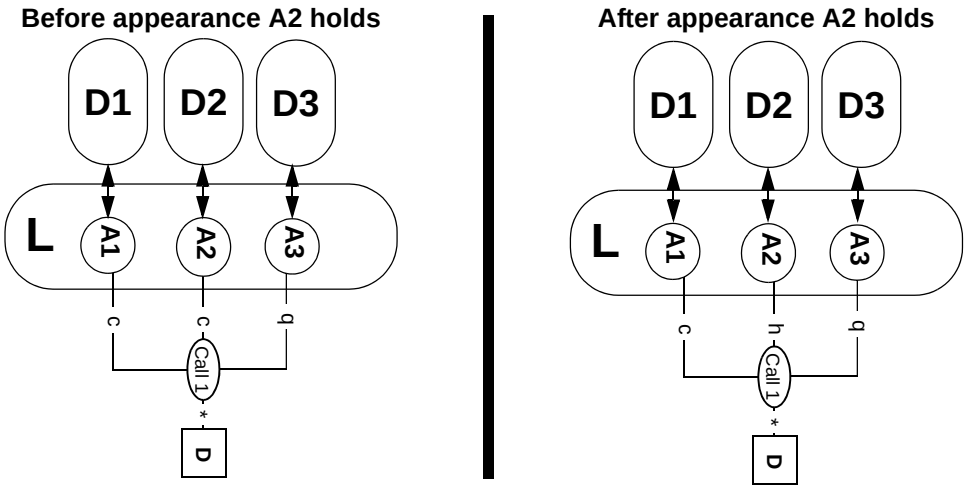

Case Two

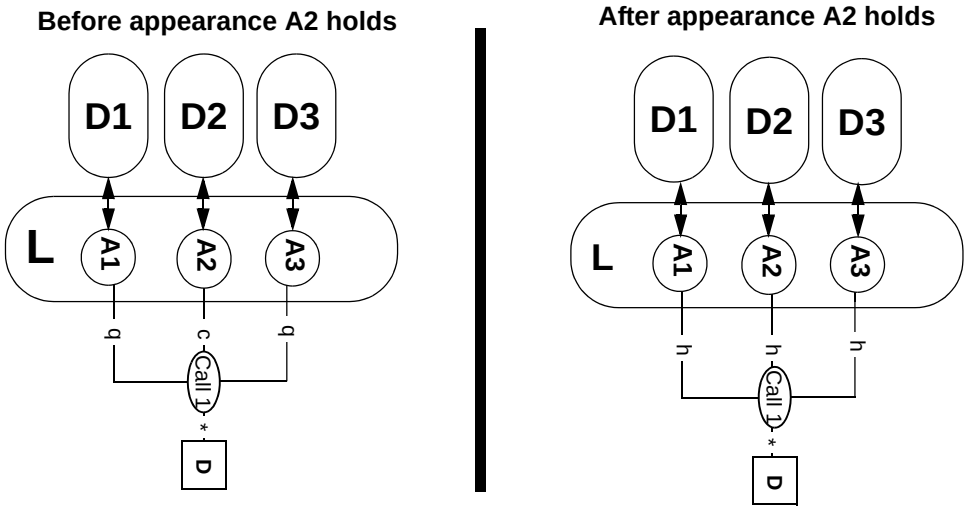

- *Interdependent-shared-bridged* - When the call is moved away from the logical element by one of the appearances (no matter what the connection state of the other appearances in the call), all appearances are cleared from the call. Figure A-8 in Case 2 illustrates this behaviour of interdependent-shared-bridged appearances.

When one of the appearances places the call on hold, all appearances will transition to the hold state. When one of appearances retrieves the call, then the appearance retrieving the call will transition to the connected state and the other appearances will transition to the inactive mode. Figure A-9 in Case 2 illustrates this behaviour of interdependent-shared-bridged appearances.

© ISO/IEC 2007 – All rights reserved

Copyright International Organization for Standardization
Provided by IHS under license with ISO
No reproduction or networking permitted without license from IHS
Not for Resale

Annex B
(normative)

ISDN User-User Information Element Encoding for CSTA

This annex specifies one possible mechanism for sending CSTA information such as correlator data, user data, and call linkage data over an external network.

This mechanism transmits CSTA information through the network in the ISDN User-User (UU) Information Element (IE) in ISDN call control and User Info messages where supported. Transmission of User-User data is not supported by all parts of the public network.

Figure B-1 describes the CSTA UU IE format used for sending CSTA information. The first three bytes of the UU IE are defined in ITU-T Rec. Q.931. Note that this format supports sending a combination of different types of CSTA information (e.g., both user data and correlator data) in the same CSTA UU IE (see Functional Requirement #1).

Figure B-1 CSTA User-User Information Element (UU IE) Field Format

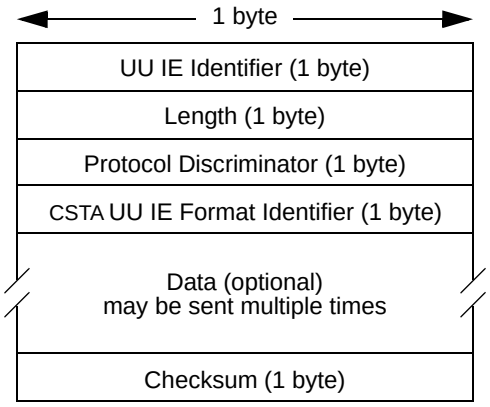

- The *UU IE Identifier* field identifies the UU IE packet. Its value is 0x7E.
- The *Length* field provides the total length of the UU IE packet.
- The *Protocol Discriminator* signals end-to-end transparency to the public switch vendor. Its value is 0x00.
- The CSTA UU IE Format Identifier identifies that the information element contains CSTA Information such as correlator data, user data, or call linkage data. Its value is 0x45.
- The *Data* field is optional, may be sent multiple times and has the following format:

Figure B-2 Data Field Format

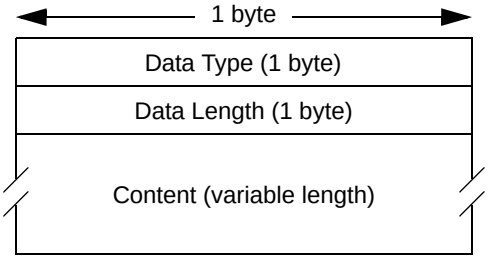

© ISO/IEC 2007 – All rights reserved

Copyright International Organization for Standardization
Provided by IHS under license with ISO
No reproduction or networking permitted without license from IHS
Not for Resale

- The *Data Type* sub-field specifies the type of CSTA information. The possible types are: correlator data (value is 0x80), user data (value is 0x81), and call linkage data (value is 0x82).
- The *Data Length* sub-field provides the length of the Content field.
- The *Content* sub-field contains the appropriate CSTA information (correlator data, user data, or call linkage data).
- The *Checksum* field verifies that the packet is the CSTA UU IE packet defined in this annex.

Functional Requirements

1. Multiple Data Type entries may be sent in each UU IE. The entries may be repeated up to a maximum packet length of 128 bytes.[1)]
2. A switching function reports its supported maximum lengths for correlator data and user data in the capabilities exchange services.
3. The possible maximum data lengths in ISDN messages are 121 bytes for user data and 32 bytes for correlator data.[1]
4. If a switching function does not support a data type, it is discarded. If a switching function does not support as many entries of a particular type as were received, the additional entries are discarded.
5. Length 0 (zero) of correlator data is used to signal null correlator data to the receiving switching sub-domain. Current correlator data associated with the call shall be deleted.
6. Format and interpretation of the Content sub-field is a function of the computing function.
7. The Checksum byte contains the XOR checksum of all the bytes starting with the CSTA UU IE Format Identifier.

1) The maximum size of an ISDN UU IE packet may be limited based upon certain implementations (i.e., some public network implementations).

--`,,```,,,,````-`-`,,`,,`,`,,`---

© ISO/IEC 2007 – All rights reserved

Copyright International Organization for Standardization
Provided by IHS under license with ISO
No reproduction or networking permitted without license from IHS

Not for Resale

Annex C
(normative)

Capability Bitmap Parameters Types

This annex specifies the *capability bitmap parameters types* that are included in the Get Physical Device Information, Get Logical Device Information and Get Switching Function Capabilities services.

These parameter types are summarized in the following table.

Table C-1 Capability Bitmap Parameter Types

Capability Bitmap Parameter Type	Description	Pg.
C.1 CapExchangeServList	Specifies the Capability Exchange services that are supported by the switching function.	618
C.2 SystemStatusServList	Specifies the System Status services that are supported by the switching function.	620
C.3 MonitoringServList	Specifies the Monitoring services that are supported by the switching function.	622
C.4 SnapshotServList	Specifies the Snapshot services that are supported by the switching function.	622
C.5 CallControlServList	Specifies the Call Control services that are supported by the switching function.	624
C.6 CallControlEvtsList	Specifies the Call Control events that are supported by the switching function.	637
C.7 CallAssociatedServList	Specifies the Call Associated services that are supported by the switching function.	644
C.8 CallAssociatedEvtsList	Specifies the Call Control events that are supported by the switching function.	646
C.9 MediaServList	Specifies the Media Attachment services that are supported by the switching function.	648
C.10 MediaEvtsList	Specifies the Media Attachment events that are supported by the switching function.	649
C.11 RouteingServList	Specifies the Routeing services that are supported by the switching function.	649
C.12 PhysDevServList	Specifies the Physical Device Feature services that are supported by the switching function.	651
C.13 PhysDevEvtsList	Specifies the Physical Device Feature events that are supported by the switching function.	657
C.14 LogicalServList	Specifies the Logical Device Feature services that are supported by the switching function.	659
C.15 LogicalEvtsList	Specifies the Logical Device Feature events that are supported by the switching function.	663
C.16 DeviceMaintEvtsList	Specifies the Device Maintenance events that are supported by the switching function.	666
C.17 IOServicesServList	Specifies the I/O services that are supported by the switching function.	667
C.18 DataCollectionServList	Specifies the Data Collection services that are supported by the switching function.	669
C.19 VoiceServList	Specifies the Voice services that are supported by the switching function.	671
C.20 VoiceEvtsList	Specifies the Voice events that are supported by the switching function.	674
C.21 CDRServList	Specifies the CDR services that are supported by the switching function.	679
C.22 VendorSpecificServList	Specifies the Vendor Specific services that are supported by the switching function.	681
C.23 VendorSpecificEvtsList	Specifies the Vendor Specific events that are supported by the switching function.	682

© ISO/IEC 2007 – All rights reserved

Copyright International Organization for Standardization
Provided by IHS under license with ISO
No reproduction or networking permitted without license from IHS
Not for Resale

The capability bitmap parameter types specified in this clause consists of sets of entries. A unique entry is defined for each service/event. The switching function provides the appropriate entry for a given service/event if it supports that service/event. It shall not provide an entry for a service/event that is not supported. An entry is a bitmap where each bit represents an option that the switching function either supports or does not support.

The options that are specified in the capability bitmaps include:

- initial connection states supported for a service request. If the operational model for a service specifies more than one possible initial connection state, then the switching function shall indicate which initial connection states it supports for the service request be setting to TRUE the capability bit corresponding to the supported connections states.
- optional parameters. The switching function shall indicate the optional parameters that it supports by setting to TRUE the capability bit corresponding to the supported optional parameter. Note that some optional parameters in services/events are not included in the service/event specific bitmaps since they are specified at a switching function level (via the Get Switching Function Capabilities service). An example of a “global” optional parameter is security type information (timestamp, message sequence numbers, securityInfo).
- conditional parameters. In most cases conditional parameters are not included in the capability bitmaps since, by their definition, the switching function is required to support the parameter under the conditions specified in the parameter description (e.g., support of a specific feature). In some cases where the conditions allow the parameter to be optionally supported then the parameter is included in the capability bitmaps.
- parameter values supported. The switching function shall indicate the set of values that are supported in an enumerated list or in a bitmap list by setting to TRUE the capability bit corresponding to the value supported.
    - for optional parameters that are represented as a bitmap parameter type, there is a bit in the capability list to indicate if the parameter itself is present, and a bit in the capability list for each possible bit in the parameter.
    - for optional parameters that are represented as an enumerated parameter type, there will be a bit in the capability list for each possible value in the parameter (a separate bit to indicate if the parameter itself is present is not necessary).
- miscellaneous characteristics. The switching function shall indicate the miscellaneous characteristics that are supported by setting to TRUE the capability bit corresponding to the characteristic supported.

Note that, in the following lists, items that apply to the service acknowledgement are indicated by the text “in the acknowledgement”, otherwise the item applies to the service request.

C.1 CapExchangeServList

The CapExchangeServList parameter type specifies the capability exchange services supported by the switching function.

The information in the CapExchangeServList represents the optional parameters that are supported by the switching function.

C.1.1 Get CSTA Features

Optional parameters, values, and choices supported:

- privateData
- privateData in the acknowledgement

© ISO/IEC 2007 – All rights reserved

Copyright International Organization for Standardization
Provided by IHS under license with ISO
No reproduction or networking permitted without license from IHS
Not for Resale

C.1.2 Get Logical Device Information

Optional parameters, values, and choices supported:

- privateData
- namedDeviceTypes in the acknowledgement
- shortFormDeviceID in the acknowledgement
- miscMonitorCaps in the acknowledgement
- maxCallbacks in the acknowledgement
- maxAutoAnswerRings in the acknowledgement
- maxActiveCalls in the acknowledgement
- maxHeldCalls in the acknowledgement
- maxFwdSettings in the acknowledgement
- maxDevicesInConf in the acknowledgement
- transAndConfSetup parameter, transAndConfSetup (consultationCall, holdCallMakeCall, alternateCall, twoCallsHold, twoCallsConnected) in the acknowledgement
- mediaClassSupport in the acknowledgement
- connectionRateList in the acknowledgement
- delayToleranceList in the acknowledgement
- numberofChannels in the acknowledgement
- maxChannelBind in the acknowledgement
- privateData in the acknowledgement

C.1.3 Get Physical Device Information

Optional parameters, values, and choices supported:

- privateData
- namedDeviceTypes in the acknowledgement
- otherLogicalDeviceList in the acknowledgement
- deviceModelName in the acknowledgement
- maxDisplays in the acknowledgement
- maxButtons in the acknowledgement
- maxLamps in the acknowledgement
- maxRingPatterns in the acknowledgement
- privateData in the acknowledgement

C.1.4 Get Switching Function Capabilities

Note that there are no capability bits associated with this service.

C.1.5 Get Switching Function Devices

Optional parameters, values, and choices supported:

--`,,```,,,,````-`-`,,`,,`,`,,`---

© ISO/IEC 2007 – All rights reserved

Copyright International Organization for Standardization
Provided by IHS under license with ISO
No reproduction or networking permitted without license from IHS
Not for Resale

- requestedDeviceID
- requestedDeviceCategory (aCD, aCDGroup, huntGroup, pickGroup, otherGroup, networkInterface, park, routeingDevice, station, voiceUnit, other)
- privateData
- privateData in the acknowledgement

C.1.6 Switching Function Devices

Optional parameters, values, and choices supported:

- segmentID
- deviceListDeviceCategory
- deviceListNamedDeviceTypes
- deviceListDeviceAttributes
- deviceListDeviceModelName
- deviceListDeviceNIDGroup
- privateData

C.2 SystemStatusServList

The SystemStatusServList parameter type specifies the system status services supported by the switching function.

C.2.1 Change System Status Filter

Optional parameters, values, and choices supported:

- requestedStatusFilter (initializing, enabled, normal, messagesLost, disabled, partiallyDisabled, overloadImminent, overloadReached, overloadRelieved)
- privateData
- privateData in the acknowledgement

C.2.2 System Register

Optional parameters, values, and choices supported:

- requestTypes (systemStatus, requestSystemStatus, sfCapabilitiesChanged, sfDevicesChanged)
- requestedStatusFilter (initializing, enabled, normal, messagesLost, disabled, partiallyDisabled, overloadImminent, overloadReached, overloadRelieved)
- privateData
- privateData in the acknowledgement

C.2.3 System Status Register Abort

Optional parameters, values, and choices supported:

- privateData

© ISO/IEC 2007 – All rights reserved

Copyright International Organization for Standardization
Provided by IHS under license with ISO
No reproduction or networking permitted without license from IHS
Not for Resale

- privateData in the acknowledgement

C.2.4 System Status Register Cancel

Optional parameters, values, and choices supported:

- privateData
- privateData in the acknowledgement

C.2.5 Request System Status

Optional parameters, values, and choices supported:

- privateData in the service request
- systemStatus (initializing, enabled, normal, messagesLost, disabled, partiallyDisabled, overloadImminent, overloadReached, overloadRelieved) in the acknowledgement
- privateData in the acknowledgement

Miscellaneous Characteristics:

- Switching Functions supports sending the service request
- Switching Functions supports receiving the service request

C.2.6 System Status

Optional parameters, values, and choices supported:

- systemStatus (initializing, enabled, normal, messagesLost, disabled, partiallyDisabled, overloadImminent, overloadReached, overloadRelieved) in the service request
- privateData
- privateData in the acknowledgement

Miscellaneous Characteristics:

- Switching Functions supports sending the service request
- Switching Functions supports receiving the service request

C.2.7 Switching Function Capabilities Changed

Optional parameters, values, and choices supported:

- privateData
- privateData in the acknowledgement

C.2.8 Switching Function Devices Changed

Optional parameters, values, and choices supported:

- privateData
- privateData in the acknowledgement

© ISO/IEC 2007 – All rights reserved

Copyright International Organization for Standardization
Provided by IHS under license with ISO
No reproduction or networking permitted without license from IHS
Not for Resale

C.3 MonitoringServList

The MonitoringServList parameter type specifies the monitoring services that are supported by the switching function.

C.3.1 Change Monitor Filter

Optional parameters, values, and choices supported:

- privateData
- privateData in the acknowledgement

C.3.2 Monitor Start

Optional parameters, values, and choices supported:

- monitorObject (call, device)
- requestedMonitorFilter
- monitorType (callType, deviceType)
- requestedMonitorMediaClass parameter, requestedMonitorMediaClass (audio, data, image, voice)
- monitorExistingCalls in the acknowledgement
- privateData in the acknowledgement

Miscellaneous Characteristics:

- CallIDOnly - Does the switching function accept or support the CallID only format of the Connection ID for this service?
- Switching function default for monitor-type is device-type (if FALSE then it is call-type).
- Does the switching function accept a Monitor Start service request on a device that is out of service?

C.3.3 Monitor Stop

Optional parameters, values, and choices supported:

- privateData
- privateData in the acknowledgement

Miscellaneous Characteristics:

- Does the switching function generate this service request?
- Does the switching function support receiving this service request?

C.4 SnapshotServList

The SnapshotServList parameter type specifies the snapshot services supported by the switching function.

C.4.1 Snapshot Call

Optional parameters, values, and choices supported:

--`,,```,,,,````-`-`,,`,,`,`,,`---
© ISO/IEC 2007 – All rights reserved
Copyright International Organization for Standardization
Provided by IHS under license with ISO
No reproduction or networking permitted without license from IHS
Not for Resale

- privateData
- localConnectionState in the acknowledgement
- mediaServiceInformationList in the acknowledgement
    - mediaServiceVersion
    - mediaServiceInstance
    - mediaStreamID
    - connectionInformation
- mediaCallCharacteristics in the acknowledgement
- callCharacteristics in the acknowledgement
- callingDevice in the acknowledgement
- calledDevice in the acknowledgement
- privateData in the acknowledgement
- subjectOfCall in the acknowledgement
- messageInfo in the acknowledgement
- languagePreferences in the acknowledgement
- deviceHistory in the acknowledgement

Miscellaneous Characteristics:

- CallIDOnly - Does the switching function accept or support the CallID only format of the Connection ID for this service?
- Does the switching function use the Snapshot CallData service to report the requested information?

C.4.2 Snapshot Device

Optional parameters, values, and choices supported:

- privateData
- localCallState (compoundCallState, simpleCallState, unknown) in the acknowledgement
- mediaServiceInformationList in the acknowledgement
    - mediaServiceVersion
    - mediaServiceInstance
    - mediaStreamID
    - connectionInformation
- mediaCallCharacteristics in the acknowledgement
- privateData in the acknowledgement
- endpointDevice in the acknowledgement

Miscellaneous Characteristics:

- Does the switching function use the Snapshot DeviceData service to report the requested information?

C.4.3 Snapshot CallData

Optional parameters, values, and choices supported:

© ISO/IEC 2007 – All rights reserved

Copyright International Organization for Standardization
Provided by IHS under license with ISO
No reproduction or networking permitted without license from IHS
Not for Resale

- segmentID
- localConnectionState
- mediaServiceInformationList
    - mediaServiceVersion
    - mediaServiceInstance
    - mediaStreamID
    - connectionInformation
- privateData in the acknowledgement

C4.4 Snapshot DeviceData

Optional parameters, values, and choices supported:

- segmentID
- localCallState (compoundCallState, simpleCallState, unknown)
- mediaServiceInformationList
    - mediaServiceVersion
    - mediaServiceInstance
    - mediaStreamID
    - connectionInformation
- mediaCallCharacteristics
- privateData
- endpointDevice

C.5 CallControlServList

The CallControlServList parameter specifies the call control services that are supported by the switching function.

C.5.1 Accept Call

Optional parameters, values, and choices supported:

- correlatorData
- userData
- privateData
- privateData in the acknowledgement

Miscellaneous Characteristics:

- DeviceIDOnly - Does the switching function accept or support the DeviceID only format of the Connection ID for this service?
- Service Request Acknowledgement Model (Atomic [FALSE] or Multi-Step [TRUE])

© ISO/IEC 2007 – All rights reserved
--`,,```,,,,````-`-`,,`,,`,`,,`---
Copyright International Organization for Standardization
Provided by IHS under license with ISO
No reproduction or networking permitted without license from IHS
Not for Resale

C.5.2 Alternate Call

Initial states heldCall:

- Alerting
- Hold
- Queued

Optional parameters, values, and choices supported:

- connectionReservation
- consultOptions (consultOnly, transferOnly, conferenceOnly, unrestricted)
- privateData
- privateData in the Acknowledgement

Miscellaneous Characteristics:

- DeviceIDOnly - Does the switching function accept or support the DeviceID only format of the Connection ID for this service?
- Supports Offered Mode of Alerting?
- Service Request Acknowledgement Model (Atomic [FALSE] or Multi-Step [TRUE])

C.5.3 Answer Call

Initial states callToBeAnswered:

- Alerting
- Initiated
- Queued

Optional parameters, values, and choices supported:

- correlatorData
- userData
- privateData
- privateData in the acknowledgement

Miscellaneous Characteristics:

- DeviceIDOnly - Does the switching function accept or support the DeviceID only format of the Connection ID for this service?
- Supports Offered Mode of Alerting?
- Service Request Acknowledgement Model (Atomic [FALSE] or Multi-Step [TRUE])

C.5.4 Call Back Call-Related

Initial states target:

- Alerting
- Fail
- Null
- Queued

© ISO/IEC 2007 – All rights reserved

--`,,```,,,,````-`-`,,`,,`,`,,`---
Copyright International Organization for Standardization
Provided by IHS under license with ISO
No reproduction or networking permitted without license from IHS
Not for Resale

Optional parameters, values, and choices supported:

- callCharacteristics
- privateData
- targetDevice in the acknowledgement
- privateData in the acknowledgement
- subjectOfCall in the request
- languagePreferences in the request

Miscellaneous Characteristics:

- DeviceIDOnly - Does the switching function accept or support the DeviceID only format of the Connection ID for this service?
- Do additional Call Back Call-Related services for the same calling and called devices result in a negative acknowledgement? (if FALSE, then it is positively acknowledged).
- Service Request Acknowledgement Model (Atomic [FALSE] or Multi-Step [TRUE])

C.5.5 Call Back Message Call-Related

Initial states target:

- Alerting
- Fail
- Null
- Queued

Optional parameters, values, and choices supported:

- privateData
- targetDevice in the acknowledgement
- privateData in the acknowledgement

Miscellaneous Characteristics:

- DeviceIDOnly - Does the switching function accept or support the DeviceID only format of the Connection ID for this service?
- Do additional Call Back Message Call-Related services for the same calling and called devices result in a negative acknowledgement? (if FALSE, then it is positively acknowledged).
- Service Request Acknowledgement Model (Atomic [FALSE] or Multi-Step [TRUE])

C.5.6 Camp On Call

Optional parameters, values, and choices supported:

- privateData
- privateData in the acknowledgement

Miscellaneous Characteristics:

© ISO/IEC 2007 – All rights reserved

Copyright International Organization for Standardization
Provided by IHS under license with ISO
No reproduction or networking permitted without license from IHS
Not for Resale

- DeviceIDOnly - Does the switching function accept or support the DeviceID only format of the Connection ID for this service?
- Service Request Acknowledgement Model (Atomic [FALSE] or Multi-Step [TRUE])

C.5.7 Clear Call

Initial states callToBeCleared:

- Alerting
- Connected
- Fail
- Queued
- Initiated
- Hold

Optional parameters, values, and choices supported:

- userData
- privateData
- privateData in the acknowledgement
- reason in the request

Miscellaneous Characteristics:

- DeviceIDOnly - Does the switching function accept or support the DeviceID only format of the Connection ID for this service?
- CallIDOnly - Does the switching function accept or support the CallID only format of the connection ID for this service?
- Service Request Acknowledgement Model (Atomic [FALSE] or Multi-Step [TRUE])

C.5.8 Clear Connection

Initial states callToBeCleared:

- Alerting
- Connected
- Fail
- Queued
- Hold
- Initiated

Optional parameters, values, and choices supported:

- correlatorData
- userData
- privateData
- privateData in the acknowledgement
- reason in the request

© ISO/IEC 2007 – All rights reserved

Copyright International Organization for Standardization
Provided by IHS under license with ISO
No reproduction or networking permitted without license from IHS
Not for Resale

Miscellaneous Characteristics:

- DeviceIDOnly - Does the switching function accept or support the DeviceID only format of the Connection ID for this service?
- Service Request Acknowledgement Model (Atomic [FALSE] or Multi-Step [TRUE])

C.5.9 Conference Call

Initial states activeCall:

- Connected
- Hold

Initial states heldCall:

- Connected
- Hold

Optional parameters, values, and choices supported:

- privateData
- connections parameter in the acknowledgement
    - endpointDeviceID
    - resultingConnectionInformation parameter
- conferenceCallInfo parameter in the acknowledgement
- privateData in the acknowledgement

Miscellaneous Characteristics:

- Is the resulting conference call protected against being cleared if the conferencing device leaves the call?
- DeviceIDOnly - Does the switching function accept or support the DeviceID only format of the Connection ID for this service?
- Service Request Acknowledgement Model (Atomic [FALSE] or Multi-Step [TRUE])

C.5.10 Consultation Call

Optional parameters, values, and choices supported:

- connectionReservation
- accountCode
- authCode
- correlatorData
- userData
- callCharacteristics, callCharacteristics (acdCall, priorityCall, maintenanceCall, directAgent, assistCall, voiceUnitCall, privateCall, personalCall, sensitiveCall, confidentialCall)
- mediaCallCharacteristics
- callingConnectionInfo parameter
    - flowDirection (transmit, receive, transmitAndReceive, none)

© ISO/IEC 2007 – All rights reserved

Copyright International Organization for Standardization
Provided by IHS under license with ISO
No reproduction or networking permitted without license from IHS
Not for Resale

    - numberOfChannels
- consultOptions (consultOnly, transferOnly, conferenceOnly, Unrestricted)
- privateData
- initiatedCallInfo in the acknowledgement
- privateData in the acknowledgement
- subjectOfCall in the request
- languagePreferences in the request

Miscellaneous Characteristics:

- DeviceIDOnly - Does the switching function accept or support the DeviceID only format of the Connection ID for this service?
- MultiStage- Does the switching function support multistage dialling with this service?
- Does the switching function support adjustment of the media characteristics?
- Service Request Acknowledgement Model (Atomic [FALSE] or Multi-Step [TRUE])

C.5.11 Deflect Call

Initial states callToBeDeflected:

- Alerting
- Connected
- Failed
- Hold
- Queued

Optional parameters, values, and choices supported:

- correlatorData
- userData
- privateData
- privateData in the acknowledgement
- subjectOfCall in the request
- languagePreferences in the request
- reason in the request

Miscellaneous Characteristics:

- DeviceIDOnly - Does the switching function accept or support the DeviceID only format of the Connection ID for this service?
- Service Request Acknowledgement Model (Atomic [FALSE] or Multi-Step [TRUE])

C.5.12 Dial Digits

Optional parameters, values, and choices supported:

- correlatorData

© ISO/IEC 2007 – All rights reserved

Copyright International Organization for Standardization
Provided by IHS under license with ISO
No reproduction or networking permitted without license from IHS
Not for Resale

- privateData
- privateData in the acknowledgement

Miscellaneous Characteristics:

- DeviceIDOnly - Does the switching function accept or support the DeviceID only format of the Connection ID for this service?
- Service Request Acknowledgement Model (Atomic [FALSE] or Multi-Step [TRUE])

C.5.13 Directed Pickup Call

Initial states callToBePickedUp:

- Alerting
- Connected
- Hold
- Queued

Optional parameters, values, and choices supported:

- correlatorData
- userData
- privateData
- pickedCall in the acknowledgement
- pickedCallInfo in the acknowledgement
- privateData in the acknowledgement

Miscellaneous Characteristics:

- DeviceIDOnly - Does the switching function accept or support the DeviceID only format of the Connection ID for this service?
- Supports Offered Mode of Alerting?
- Prompting - Does the switching function support prompting for the newDestinationDevice?
- Prompting Mode - Is prompting part of the execution of the service?
- Service Request Acknowledgement Model (Atomic [FALSE] or Multi-Step [TRUE])

C.5.14 Group Pickup Call

Initial states for the connection that is picked:

- Alerting
- Connected
- Hold
- Queued

Optional parameters, values, and choices supported:

- pickGroup
- correlatorData

© ISO/IEC 2007 – All rights reserved

Copyright International Organization for Standardization
Provided by IHS under license with ISO
No reproduction or networking permitted without license from IHS
Not for Resale

- userData
- privateData
- pickedCall in the acknowledgement
- pickedCallInfo in the acknowledgement
- privateData in the acknowledgement

Miscellaneous Characteristics:

- Prompting - Does the switching function support prompting for the newDestinationDevice?
- Prompting Mode - Is prompting part of the execution of the service?
- Supports Offered Mode of Alerting?
- Service Request Acknowledgement Model (Atomic [FALSE] or Multi-Step [TRUE])

C.5.15 Hold Call

Optional parameters, values, and choices supported:

- connectionReservation
- privateData
- privateData in the acknowledgement

Miscellaneous Characteristics:

- DeviceIDOnly - Does the switching function accept or support the DeviceID only format of the Connection ID for this service?
- Service Request Acknowledgement Model (Atomic [FALSE] or Multi-Step [TRUE])

C.5.16 Intrude Call

Optional parameters, values, and choices supported:

- participationType (active, silent, none)
- userData
- privateData
- conferencedCallInfo in the acknowledgement
- privateData in the acknowledgement

Miscellaneous Characteristics:

- DeviceIDOnly - Does the switching function accept or support the DeviceID only format of the Connection ID for this service?
- Conference - Does the switching function support conferencing the intruder with the existing call?
- Alternate - Does the switching function support putting the existing call on hold and establishing a call with the intruder?
- Service Request Acknowledgement Model (Atomic [FALSE] or Multi-Step [TRUE])

C.5.17 Join Call

Optional parameters, values, and choices supported:

© ISO/IEC 2007 – All rights reserved --`,,```,,,,````-`-`,,`,,`,`,,`---

Copyright International Organization for Standardization
Provided by IHS under license with ISO
No reproduction or networking permitted without license from IHS Not for Resale

- autoOriginate (prompt, doNotPrompt)
- participationType (active, silent, none)
- accountCode
- authCode
- correlatorData
- userData
- privateData
- conferencedCall in the acknowledgement
- conferencedCallInfo in the acknowledgement
- privateData in the acknowledgement

Miscellaneous Characteristics:

- DeviceIDOnly - Does the switching function accept or support the DeviceID only format of the Connection ID for this service?
- Prompting - Does the switching function support prompting for the joiningDevice?
- Prompting Mode - Is prompting part of the execution of the service?
- Service Request Acknowledgement Model (Atomic [FALSE] or Multi-Step [TRUE])

C.5.18 Make Call

Initial states for the calling device connection:

- Initiated
- Null

Optional parameters, values, and choices supported:

- accountCode
- authCode
- autoOriginate (prompt, doNotPrompt)
- correlatorData
- userData
- callCharacteristics parameter, callCharacteristics (acdCall, priorityCall, maintenanceCall, directAgent, assistCall, voiceUnitCall, privateCall, personalCall, sensitiveCall, confidentialCall)
- mediaCallCharacteristics
- callingConnectionInfo
- privateData
- initiatedCallInfo in the acknowledgement
- privateData in the acknowledgement
- subjectOfCall in the request
- languagePreferences in the request
- reason in the request

Miscellaneous Characteristics:

© ISO/IEC 2007 – All rights reserved
Copyright International Organization for Standardization
Provided by IHS under license with ISO
No reproduction or networking permitted without license from IHS
Not for Resale

- MultiStage- Does the switching function support multistage dialling with this service?
- Prompting - Does the switching function support prompting for the callingDevice?
- Prompting Mode - Is prompting part of the execution of the service?
- Offhook - Does the switching function support the performing of a Make Call while the callingDevice is off-hook?
- Can the switching function adjust the media characteristics of the call?
- Service Request Acknowledgement Model (Atomic [FALSE] or Multi-Step [TRUE])

C.5.19 Make Predictive Call

Optional parameters, values, and choices supported:

- signallingDetection parameter
    - signallingCondition (callDelivered, CallEstablished)
    - signallingConditionsAction (destinationDetection, remainConnected)
- destinationDetection parameter
    - destinationCondition (humanVoice, answeringMachine, facimileMachine)
    - detectionAction (clearCallConnection, remainConnected)
- defaultAction (clearCalledConnection, remainConnected)
- accountCode
- authCode
- autoOriginate (prompt, doNotPrompt)
- alertTime
- correlatorData
- callCharacteristics, callCharacteristics (acdCall, priorityCall, maintenanceCall, directAgent, assistCall, voiceUnitCall, privateCall, personalCall, sensitiveCall, confidentialCall)
- userData
- privateData
- initiatedCallInfo in the acknowledgement
- privateData in the acknowledgement
- subjectOfCall in the request
- languagePreferences in the request

Miscellaneous Characteristics:

- Prompting - Does the switching function support prompting for the callingDevice?
- Prompting Mode - Is prompting part of the execution of the service?
- Does the switching function generate a Service Initiated event for the calling device prior to any call activity at the calling device (i.e. reserve the calling device)?
- Service Request Acknowledgement Model (Atomic [FALSE] or Multi-Step [TRUE])

© ISO/IEC 2007 – All rights reserved

Copyright International Organization for Standardization
Provided by IHS under license with ISO
No reproduction or networking permitted without license from IHS
Not for Resale

C.5.20 Park Call

Initial states callToBeParked:

- Connected
- Hold

Optional parameters, values, and choices supported:

- correlatorData
- privateData
- parkedTo in the acknowledgement
- privateData in the acknowledgement
- subjectOfCall in the request
- languagePreferences in the request

Miscellaneous Characteristics:

- DeviceIDOnly - Does the switching function accept or support the DeviceID only format of the Connection ID for this service?
- Service Request Acknowledgement Model (Atomic [FALSE] or Multi-Step [TRUE])

C.5.21 Reconnect Call

Initial states activeCall:

- Alerting
- Connected
- Fail
- Initiated
- Queued

Optional parameters, values, and choices supported:

- privateData
- privateData in the acknowledgement

Miscellaneous Characteristics:

- DeviceIDOnly - Does the switching function accept or support the DeviceID only format of the Connection ID for this service?
- Service Request Acknowledgement Model (Atomic [FALSE] or Multi-Step [TRUE])

C.5.22 Retrieve Call

Optional parameters, values, and choices supported:

- privateData
- privateData in the acknowledgement

Miscellaneous Characteristics:

--`,,```,,,,````-`-`,,`,,`,`,,`---
© ISO/IEC 2007 – All rights reserved
Copyright International Organization for Standardization
Provided by IHS under license with ISO
No reproduction or networking permitted without license from IHS
Not for Resale

- DeviceIDOnly - Does the switching function accept or support the DeviceID only format of the Connection ID for this service?
- Service Request Acknowledgement Model (Atomic [FALSE] or Multi-Step [TRUE])

C.5.23 Send Message Service

Optional parameters, values, and choices supported:

- accountCode
- authCode
- correlatorData
- callCharacteristics
- mediaCallCharacteristics
- subjectOfCall
- languagePreferences
- privateData
- privateData in the acknowledgement

C.5.24 Single Step Conference Call

Optional parameters, values, and choices supported:

- participationType (active, silent, none)
- accountCode
- authCode
- correlatorData
- userData
- privateData
- conferencedCallInfo in the acknowledgement
- privateData in the acknowledgement
- subjectOfCall in the request
- languagePreferences in the request

Miscellaneous Characteristics:

- DeviceIDOnly - Does the switching function accept or support the DeviceID only format of the Connection ID for this service?
- Service Request Acknowledgement Model (Atomic [FALSE] or Multi-Step [TRUE])

C.5.25 Single Step Transfer Call

Initial states activeCall:

- Alerting
- Connected
- Failed

© ISO/IEC 2007 – All rights reserved

Copyright International Organization for Standardization
Provided by IHS under license with ISO
No reproduction or networking permitted without license from IHS
Not for Resale

- Hold
- Queued

Optional parameters, values, and choices supported:

- accountCode
- authCode
- correlatorData
- userData
- privateData
- connections parameter in the acknowledgement
    - endpointDeviceID
    - resultingConnectionInformation
- transferredCallInfo in the acknowledgement
- privateData in the acknowledgement
- subjectOfCall in the request
- languagePreferences in the request
- reason in the request

Miscellaneous Characteristics:

- DeviceIDOnly - Does the switching function accept or support the DeviceID only format of the Connection ID for this service?
- MultipleDevices - Does the switching function support transferring multiple devices or a conference call?
- Service Request Acknowledgement Model (Atomic [FALSE] or Multi-Step [TRUE])

C.5.26 Transfer Call

Initial states activeCall:

- Connected
- Hold

Initial states heldCall:

- Connected
- Hold

Optional parameters, values, and choices supported:

- privateData
- connections parameter in the acknowledgement
    - endpointDeviceID
    - resultingConnectionInformation
- transferredCallInfo in the acknowledgement
- privateData in the acknowledgement

Miscellaneous Characteristics:

© ISO/IEC 2007 – All rights reserved

Copyright International Organization for Standardization
Provided by IHS under license with ISO
No reproduction or networking permitted without license from IHS
Not for Resale

- DeviceIDOnly - Does the switching function accept or support the DeviceID only format of the Connection ID for this service?
- MultipleDevices - Does the switching function support transferring multiple devices or a conference call?
- Service Request Acknowledgement Model (Atomic [FALSE] or Multi-Step [TRUE])

C.6 CallControlEvtsList

The CallControlEvtsList parameter type specifies the call control events that are supported by the switching function.

The following list describes some general requirements for the capability options related to the Call Control events.

1. The localConnectionInfo parameter is not specified in the capability bit maps for the events. The computing function can use the Get Switching Function Capabilities service to determine if device-type monitoring is supported.
2. The conditional parameters correlatorData and callLinkageData are not specified in the capability bit maps for the events since it is required if the switching function supports correlator data. The computing function can use the Get Switching Function Capabilities service to determine if the correlator data and the call linkage features are supported. Note that for the events where the correlatorData and callLinkageData have been defined as optional, the capability bit is specified.

C.6.1 Bridged

Optional parameters, values, and choices supported:

- correlatorData
- userData
- servicesPermitted
- mediaCallCharacteristics
- callCharacteristics
- bridgedConnectionInfo
- callLinkageData
- privateData
- languagePreferences

C.6.2 Call Cleared

Optional parameters, values, and choices supported:

- correlatorData
- userData
- mediaCallCharacteristics
- callCharacteristics
- callLinkageData
- privateData

© ISO/IEC 2007 – All rights reserved

Copyright International Organization for Standardization
Provided by IHS under license with ISO
No reproduction or networking permitted without license from IHS
Not for Resale

- languagePreferences

Miscellaneous Characteristics:

- CallIDOnly - Does the switching function accept or support the CallID only format of the Connection ID for this event?

C.6.3 Conferenced

Optional parameters, values, and choices supported:

- conferenceConnections (endpointDeviceID, resultingConnectionInformation)
- userData
- servicesPermitted
- mediaCallCharacteristics
- callCharacteristics
- privateData
- languagePreferences
- deviceHistory

C.6.4 Connection Cleared

Optional parameters, values, and choices supported:

- correlatorData
- userData
- chargingInfo
    - numberUnits (numberOfChargingUnits, typeOfUnits, numberOfCurrencyUnits)
    - typeOfChargingInformation (subTotal, total)
    - chargingMultiplier (.001, .01, .1, 1, 10, 100, 1000)
- servicesPermitted
- mediaCallCharacteristics
- callCharacteristics
- droppedConnectionInfo
- callLinkageData
- privateData
- languagePreferences
- deviceHistory

C.6.5 Delivered

Optional parameters, values, and choices supported:

- originatingNIDConnection
- userData

© ISO/IEC 2007 – All rights reserved
Copyright International Organization for Standardization
Provided by IHS under license with ISO
No reproduction or networking permitted without license from IHS
Not for Resale

- servicesPermitted
- networkCallingDevice
- networkCalledDevice
- mediaCallCharacteristics
- callCharacteristics
- connectionInfo
- privateData
- subjectOfCall
- messageInfo
- languagePreferences
- deviceHistory

C.6.6 Digits Dialed

Optional parameters, values, and choices supported:

- servicesPermitted
- networkCallingDevice
- networkCalledDevice
- diallingConnectionInfo
- callCharacteristics
- privateData
- languagePreferences

C.6.7 Diverted

Optional parameters, values, and choices supported:

- callingDevice
- calledDevice
- userData
- servicesPermitted
- mediaCallCharacteristics
- callCharacteristics
- connectionInfo
- networkCallingDevice
- networkCalledDevice
- privateData
- Does the switching function send the Diverted Event to all devices in a call (for Device-type monitor) and to a Call-type monitor?
- subjectOfCall
- messageInfo

© ISO/IEC 2007 – All rights reserved

Copyright International Organization for Standardization
Provided by IHS under license with ISO
No reproduction or networking permitted without license from IHS
Not for Resale

- languagePreferences
- deviceHistory

C.6.8 Established

Optional parameters, values, and choices supported:

- originatingNIDConnection
- userData
- servicesPermitted
- networkCallingDevice
- networkCalledDevice
- mediaCallCharacteristics
- callCharacteristics
- establishedConnectionInfo
- privateData
- subjectOfCall
- messageInfo
- languagePreferences
- deviceHistory

C.6.9 Failed

Optional parameters, values, and choices supported:

- originatingNIDConnection
- userData
- servicesPermitted
- networkCallingDevice
- networkCalledDevice
- mediaCallCharacteristics
- callCharacteristics
- failedConnectionInfo
- privateData
- subjectOfCall
- messageInfo
- languagePreferences
- deviceHistory

Miscellaneous Characteristics:

- CallIDOnly - Does the switching function support the CallID only format of the Connection ID for this event?

© ISO/IEC 2007 – All rights reserved

Copyright International Organization for Standardization
Provided by IHS under license with ISO
No reproduction or networking permitted without license from IHS
Not for Resale

C.6.10 Held

Optional parameters, values, and choices supported:

- correlatorData
- servicesPermitted
- mediaCallCharacteristics
- callCharacteristics
- heldConnectionInfo
- callLinkageData
- privateData
- languagePreferences

C.6.11 Network Capabilities Changed

Optional parameters, values, and choices supported:

- progressLocation (user, privateServingLocal, publicServingLocal, transitNetwork, publicServingRemote, privateServingRemote, local, international, networkBeyondInterworkingPoint, other)
- progressDescription (iSDN, qSIG, other)
- userData
- networkType (iSDNPublic, nonISDNPublic, iSDNPrivate, nonISDNPrivate, other)
- eventsProvided parameter, eventsProvided (bridged, callCleared, conferenced, connectionCleared, delivered, digitsDialled, diverted, established, failed, held, networkCapabilitiesChanged, networkReached, offered, originated, queued, retrieved, serviceInitiated, transferred)
- servicesPermitted
- mediaCallCharacteristics
- callCharacteristics
- outboundConnectionInfo
- privateData
- languagePreferences

C.6.12 Network Reached

Optional parameters, values, and choices supported:

- originatingNIDConnection
- userData
- networkType (iSDNPublic, nonISDNPublic, iSDNPrivate, nonISDNPrivate, other)
- eventsProvided parameter, eventsProvided (bridged, callCleared, conferenced, connectionCleared, delivered, digitsDialled, diverted, established, failed, held, networkCapabilitiesChanged, networkReached, offered, originated, queued, retrieved, serviceInitiated, transferred)
- servicesPermitted
- mediaCallCharacteristics

© ISO/IEC 2007 – All rights reserved

Copyright International Organization for Standardization
Provided by IHS under license with ISO
No reproduction or networking permitted without license from IHS
Not for Resale

- callCharacteristics
- outboundConnectionInfo
- networkCallingDevice
- networkCalledDevice
- privateData
- languagePreferences
- deviceHistory

C.6.13 Offered

Optional parameters, values, and choices supported:

- originatingNIDConnection
- userData
- servicesPermitted
- networkCallingDevice
- networkCalledDevice
- mediaCallCharacteristics
- callCharacteristics
- offeredConnectionInfo
- privateData
- subjectOfCall
- messageInfo
- languagePreferences
- deviceHistory

C.6.14 Originated

Optional parameters, values, and choices supported:

- originatingDevice
- servicesPermitted
- networkCallingDevice
- networkCalledDevice
- mediaCallCharacteristics
- callCharacteristics
- originatedConnectionInfo
- privateData
- subjectOfCall
- messageInfo
- languagePreferences

© ISO/IEC 2007 – All rights reserved

Copyright International Organization for Standardization
Provided by IHS under license with ISO
No reproduction or networking permitted without license from IHS
Not for Resale

C.6.15 Queued

Optional parameters, values, and choices supported:

- numberQueued
- callsInFront
- userData
- servicesPermitted
- networkCallingDevice
- networkCalledDevice
- mediaCallCharacteristics
- callCharacteristics
- queuedConnectionInfo
- privateData
- subjectOfCall
- messageInfo
- languagePreferences
- deviceHistory

C.6.16 Retrieved

Optional parameters, values, and choices supported:

- correlatorData
- servicesPermitted
- mediaCallCharacteristics
- callCharacteristics
- retrievedConnectionInfo
- callLinkageData
- privateData
- languagePreferences

C.6.17 Service Initiated

Optional parameters, values, and choices supported:

- servicesPermitted
- mediaCallCharacteristics
- callCharacteristics
- initiatedConnectionInfo
- networkCallingDevice
- networkCalledDevice
- privateData

© ISO/IEC 2007 – All rights reserved

Copyright International Organization for Standardization
Provided by IHS under license with ISO
No reproduction or networking permitted without license from IHS
Not for Resale

- subjectOfCall
- messageInfo
- languagePreferences

C.6.18 Transferred

Optional parameters, values, and choices supported:

- transferredConnections (endpointDeviceID, resultingConnectionInformation)
- userData
- chargingInfo
    - numberUnits (numberOfChargingUnits, typeOfUnits, numberOfCurrencyUnits)
    - typeOfChargingInformation (subTotal, total)
    - chargingMultiplier (.001, .01, .1, 1, 10, 100, 1000)
- servicesPermitted
- mediaCallCharacteristics
- callCharacteristics
- connectionInfo
- privateData
- languagePreferences
- deviceHistory

C.7 CallAssociatedServList

The CallAssociatedServList parameter type specifies the call associated services that are supported by the switching function.

C.7.1 Associate Data

Optional parameters, values, and choices supported:

- accountCode
- authCode
- correlatorData
- callQualifyingData
- privateData
- privateData in the acknowledgement
- callCharacteristics in the request
- subjectOfCall in the request
- languagePreferences in the request
- deviceInfo in the request

Miscellaneous Characteristics:

© ISO/IEC 2007 – All rights reserved
Copyright International Organization for Standardization
Provided by IHS under license with ISO
No reproduction or networking permitted without license from IHS
Not for Resale

- DeviceIDOnly - Does the switching function accept or support the DeviceID only format of the Connection ID for this service?
- Does the switching function reject Associate Data service requests (for accountCode or callQualifyingData) that contain a connectionID that no longer exists?
- Service Request Acknowledgement Model (Atomic [FALSE] or Multi-Step [TRUE])

C.7.2 Cancel Telephony Tone

Optional parameters, values, and choices supported:

- privateData
- privateData in the acknowledgement

Miscellaneous Characteristics:

- Service Request Acknowledgement Model (Atomic [FALSE] or Multi-Step [TRUE])

C.7.3 Change Connection Information

Optional parameters, values, and choices supported:

- privateData
- privateData in the acknowledgement

C.7.4 Generate Digits

Optional parameters, values, and choices supported:

- digitMode (rotaryPulse, dTMF)
- toneDuration
- pulseRate
- pauseDuration
- privateData
- privateData in the acknowledgement

Miscellaneous Characteristics:

- DeviceIDOnly - Does the switching function accept or support the DeviceID only format of the Connection ID for this service?
- Does the switching function support the DTMF tones “A, B, C, D”?
- Does the switching function support the pause tone character of “;”?
- Service Request Acknowledgement Model (Atomic [FALSE] or Multi-Step [TRUE])

C.7.5 Generate Telephony Tones

Optional parameters, values, and choices supported:

- toneToSend (beep, billing, busy, carrier, confirmation, dial, faxCNG, hold, howler, intrusion, modemCNG, park, recordWarning, reorder, ringback, silence, sitVC, sitIC, sitRO, sitNC, sf0 through sf100)
- toneDuration

--`,,```,,,,````-`-`,,`,,`,`,,`---

© ISO/IEC 2007 – All rights reserved

Copyright International Organization for Standardization
Provided by IHS under license with ISO
No reproduction or networking permitted without license from IHS
Not for Resale

- privateData
- privateData in the acknowledgement

Miscellaneous Characteristics:

- DeviceIDOnly - Does the switching function accept or support the DeviceID only format of the Connection ID for this service?
- Service Request Acknowledgement Model (Atomic [FALSE] or Multi-Step [TRUE])

C.7.6 Send User Information

Optional parameters, values, and choices supported:

- privateData
- privateData in the acknowledgement

Miscellaneous Characteristics:

- DeviceIDOnly - Does the switching function accept or support the DeviceID only format of the Connection ID for this service?
- Service Request Acknowledgement Model (Atomic [FALSE] or Multi-Step [TRUE])

C.8 CallAssociatedEvtsList

The CallAssociatedEvtsList parameter type specifies the call associated events that are supported by the switching function.

C.8.1 Call Information

Optional parameters, values, and choices supported:

- callingDevice
- accountInfo
- authorisationCode
- correlatorData
- servicesPermitted
- userData
- callQualifyingData
- connectionInfo
- callLinkageData
- privateData
- callCharacteristics
- subjectOfCall
- languagePreferences
- deviceInfo

Miscellaneous Characteristics:

--`,,```,,,,````-`-`,,`,,`,`,,`---
© ISO/IEC 2007 – All rights reserved
Copyright International Organization for Standardization
Provided by IHS under license with ISO
No reproduction or networking permitted without license from IHS
Not for Resale

- Does the switching function generate Call Information events (for accountCode or callQualifyingData) that contain a connectionID that no longer exists?

C.8.2 Charging

Optional parameters, values, and choices supported:

- numberUnits (numberOfChargingUnits, typeOfUnits, numberOfCurrencyUnits)
- typeOfChargingInformation (subTotal, total)
- chargingMultiplier (.001, .01, .1, 1, 10, 100, 1000)
- privateData

C.8.3 Digits Generated

Optional parameters, values, and choices supported:

- digitDurationList
- pauseDurationList
- connectionInfo
- privateData

C.8.4 Telephony Tones Generated

Optional parameters, values, and choices supported:

- toneGenerated (beep, billing, busy, carrier, confirmation, dial, faxCNG, hold, howler, intrusion, modemCNG, park, recordWarning, reorder, ringback, silence, sitVC, sitIC, sitRO, sitNC, sf0 through sf100, other, unknown)
- toneFrequency
- toneDuration
- pauseDuration
- connectionInfo
- privateData

C.8.5 Service Completion Failure

Optional parameters, values, and choices supported:

- primaryCallConnectionInfo
- secondaryCall parameter, secondaryCallConnectionInfo
- otherDevicesPrimaryCallList parameter, otherDevicesPrimaryCallListConnectionInfo
- otherDevicesSecondaryCallList parameter, otherDevicesSecondaryCallListConnectionInfo
- mediaCallCharacteristics
- privateData

© ISO/IEC 2007 – All rights reserved

Copyright International Organization for Standardization
Provided by IHS under license with ISO
No reproduction or networking permitted without license from IHS
Not for Resale

C.9 MediaServList

The MediaServList parameter type specifies the media attachment services that are supported by the switching function.

C.9.1 Attach Media Service

Optional parameters, values, and choices supported:

- mediaServiceVersion
- mediaServiceInstanceID
- connectionMode (consultationConference, consultationConferenceHold, deflect, directedPickup, join, singleStepConference, singleStepConferenceHold, singleStepTransfer, transfer, direct)
- requestedConnectionState
- privateData
- mediaServiceInstanceID in the acknowledgement
- mediaConnectionInfo in the acknowledgement
- privateData in the acknowledgement

Miscellaneous Characteristics:

- DeviceIDOnly - Does the switching function accept or support the DeviceID only format of the Connection ID for this service?
- Service Request Acknowledgement Model (Atomic [FALSE] or Multi-Step [TRUE])

C.9.2 Detach Media Service

Initial States connection

- Alerting
- Connected
- Fail
- Hold
- Queued

Optional parameters, values, and choices supported:

- privateData
- privateData in the acknowledgement

Miscellaneous Characteristics:

- DeviceIDOnly - Does the switching function accept or support the DeviceID only format of the Connection ID for this service?
- Service Request Acknowledgement Model (Atomic [FALSE] or Multi-Step [TRUE])

© ISO/IEC 2007 – All rights reserved

Copyright International Organization for Standardization
Provided by IHS under license with ISO
No reproduction or networking permitted without license from IHS
Not for Resale

C.10 MediaEvtsList

The MediaEvtsList parameter type specifies the media attachment services that are supported by the switching function.

C.10.1 Media Attached

Optional parameters, values, and choices supported:

- mediaServiceVersion
- mediaServiceInstanceID
- mediaStreamID
- mediaCallCharacteristics
- callCharacteristics
- mediaConnectionInfo
- privateData

C.10.2 Media Detached

Optional parameters, values, and choices supported:

- mediaServiceVersion
- mediaServiceInstanceID
- mediaStreamID
- mediaCallCharacteristics
- callCharacteristics
- mediaConnectionInfo
- privateData

C.11 RouteingServList

The RouteingServList parameter type specifies the routeing services which the switching function might request from the computing function or that the switching function supports from the computing function.

C.11.1 Route Register

Optional parameters, values, and choices supported:

- routeingDevice
- requestedMonitorMediaClass parameter, requestedMonitorMediaClass (audio, data, image, voice)
- privateData
- actualRouteingMediaClass in the acknowledgement
- privateData in the acknowledgement

Miscellaneous Characteristics:

© ISO/IEC 2007 – All rights reserved
--`,,```,,,,````-`-`,,`,,`,`,,`---

Copyright International Organization for Standardization
Provided by IHS under license with ISO
No reproduction or networking permitted without license from IHS
Not for Resale

- AllrouteingDevices - Does the switching function support the ability to register for all routeing devices within the switching function?

C.11.2 Route Register Abort

Optional parameters, values, and choices supported:

- privateData

C.11.3 Route Register Cancel

Optional parameters, values, and choices supported:

- privateData
- privateData in the acknowledgement

C.11.4 Re-Route

Optional parameters, values, and choices supported:

- replyTimeout
- correlatorData
- privateData

C.11.5 Route End

Optional parameters, values, and choices supported:

- errorValue
- correlatorData
- privateData

Miscellaneous Characteristics:

- Switching function supports sending this service request to the computing function?
- Switching function supports receiving this service request from the computing function?

C.11.6 Route Reject

Optional parameters, values, and choices supported:

- rejectCause (busyOverflow, queueTimeOverflow, capacityOverflow, calendarOverflow, unknownOverflow)
- correlatorData
- privateData

C.11.7 Route Request

Optional parameters, values, and choices supported:

- callingDevice
- routeingDevice

© ISO/IEC 2007 – All rights reserved

Copyright International Organization for Standardization
Provided by IHS under license with ISO
No reproduction or networking permitted without license from IHS
Not for Resale

- routeSelAlgorithm (aCD, emergency, leastCost, normal, userDefined)
- priority
- replyTimeout
- correlatorData
- mediaCallCharacteristics
- callCharacteristics
- routedCallInfo
- privateData
- subjectOfCall
- messageInfo
- languagePreferences
- deviceHistory

Miscellaneous Characteristics:

- Does the switching function use the Route Request for non-call related routeing?

C.11.8 Route Select

Optional parameters, values, and choices supported:

- alternateRoutes
- remainRetries (noListAvailable, noCountAvailable, retryCount)
- routeUsedReq
- correlatorData
- privateData

C.11.9 Route Used

Optional parameters, values, and choices supported:

- callingDevice
- domain
- correlatorData
- privateData

C.12 PhysDevServList

The PhysDevServList parameter type specifies the physical device feature services that are supported by the switching function.

C.12.1 Press Button

Optional parameters, values, and choices supported:

- privateData

© ISO/IEC 2007 – All rights reserved

Copyright International Organization for Standardization
Provided by IHS under license with ISO
No reproduction or networking permitted without license from IHS
Not for Resale

- privateData in the acknowledgement

Miscellaneous Characteristics:

- Service Request Acknowledgement Model (Atomic [FALSE] or Multi-Step [TRUE])

C.12.2 Get Auditory Apparatus Information

Optional parameters, values, and choices supported:

- auditoryApparatus
- privateData
- auditoryApparatusType (speakerphone, handset, headset, speakerOnlyPhone, other)
- speaker (present, volumeSettable, volumeReadable, muteSettable, muteReadable)
- microphone (present, gainSettable, gainReadable, muteSettable, muteReadable)
- hookswitch (hookswitchSettable, hookswitchOnhook)
- privateData in the acknowledgement

C.12.3 Get Button Information

Optional parameters, values, and choices supported:

- button
- privateData
- buttonLabel in the acknowledgement
- buttonLabelSettable in the acknowledgement
- buttonFunction in the acknowledgement
- buttonAssociatedNumber in the acknowledgement
- buttonAssociatedNumberSettable in the acknowledgement
- buttonPressIndicator in the acknowledgement
- lampList in the acknowledgement
- privateData in the acknowledgement

C.12.4 Get Display

Optional parameters, values, and choices supported:

- displayID
- privateData
- characterSet (aSCII, unicode, proprietary) in the acknowledgement
- privateData in the acknowledgement

C.12.5 Get HookSwitch Status

Optional parameters, values, and choices supported:

- hookswitch

© ISO/IEC 2007 – All rights reserved

Copyright International Organization for Standardization
Provided by IHS under license with ISO
No reproduction or networking permitted without license from IHS Not for Resale

- privateData
- privateData in the acknowledgement

C.12.6 Get Lamp Information

Optional parameters, values, and choices supported:

- lamp
- privateData
- lampLabel in the acknowledgement
- button in the acknowledgement
- lampColor in the acknowledgement
- privateData in the acknowledgement

C.12.7 Get Lamp Mode

Optional parameters, values, and choices supported:

- lamp
- privateData
- lampMode in the acknowledgement
- lampBrightness (unspecifiedNormal, dim, bright) in the acknowledgement
- lampColor in the acknowledgement
- button in the acknowledgement
- privateData in the acknowledgement

C.12.8 Get Message Waiting Indicator

Optional parameters, values, and choices supported:

- privateData
- deviceForMessage in the acknowledgement
- lampIsPresent in the acknowledgement
- privateData in the acknowledgement

C.12.9 Get Microphone Gain

Optional parameters, values, and choices supported:

- auditoryApparatus
- privateData
- micGainAbs in the acknowledgement
- privateData in the acknowledgement

© ISO/IEC 2007 – All rights reserved

Copyright International Organization for Standardization
Provided by IHS under license with ISO
No reproduction or networking permitted without license from IHS
Not for Resale

C.12.10 Get Microphone Mute

Optional parameters, values, and choices supported:

- auditoryApparatus
- privateData
- privateData in the acknowledgement

C.12.11 Get Ringer Status

Optional parameters, values, and choices supported:

- ringer
- privateData
- ringCount in the acknowledgement
- ringDuration in the acknowledgement
- ringPattern in the acknowledgement
- ringVolume in the acknowledgement
- ringVolAbs in the acknowledgement
- privateData in the acknowledgement

C.12.12 Get Speaker Mute

Optional parameters, values, and choices supported:

- auditoryApparatus
- privateData
- privateData in the acknowledgement

C.12.13 Get Speaker Volume

Optional parameters, values, and choices supported:

- auditoryApparatus
- privateData
- speakerVolAbs in the acknowledgement
- privateData in the acknowledgement

C.12.14 Set Button Information

Optional parameters, values, and choices supported:

- buttonLabel
- buttonAssociatedNumber
- privateData
- privateData in the acknowledgement

--`,,```,,,,````-`-`,,`,,`,`,,`---
© ISO/IEC 2007 – All rights reserved
Copyright International Organization for Standardization
Provided by IHS under license with ISO
No reproduction or networking permitted without license from IHS
Not for Resale

Miscellaneous Characteristics:

- Service Request Acknowledgement Model (Atomic [FALSE] or Multi-Step [TRUE])

C.12.15 Set Display

Optional parameters, values, and choices supported:

- physicalBaseRowNumber
- physicalBaseColumnNumber
- offset
- privateData
- privateData in the acknowledgement

Miscellaneous Characteristics:

- Does the switching function support modifying the relative positions of the logical and physical displays (i.e., scrolling) via this service?
- Service Request Acknowledgement Model (Atomic [FALSE] or Multi-Step [TRUE])

C.12.16 Set HookSwitch Status

Optional parameters, values, and choices supported:

- privateData
- privateData in the acknowledgement

Miscellaneous Characteristics:

- Service Request Acknowledgement Model (Atomic [FALSE] or Multi-Step [TRUE])

C.12.17 Set Lamp Mode

Optional parameters, values, and choices supported:

- lampMode (brokenFlutter, flutter, off, steady, wink, reserved, sf0 through sf94)
- lampBrightness (unspecifiedNormal, dim, bright)
- lampColor (noColor, red, yellow, green, blue, reserved, sf0 through sf94)
- privateData
- privateData in the acknowledgement

Miscellaneous Characteristics:

- Service Request Acknowledgement Model (Atomic [FALSE] or Multi-Step [TRUE])

C.12.18 Set Message Waiting Indicator

Optional parameters, values, and choices supported:

- deviceForMessage
- privateData

© ISO/IEC 2007 – All rights reserved

Copyright International Organization for Standardization
Provided by IHS under license with ISO
No reproduction or networking permitted without license from IHS
Not for Resale

- privateData in the acknowledgement

Miscellaneous Characteristics:

- Service Request Acknowledgement Model (Atomic [FALSE] or Multi-Step [TRUE])

C.12.19 Set Microphone Gain

Optional parameters, values, and choices supported:

- microphoneGain (micGainAbs, micGainInc)
- privateData
- privateData in the acknowledgement

Miscellaneous Characteristics:

- Service Request Acknowledgement Model (Atomic [FALSE] or Multi-Step [TRUE])

C.12.20 Set Microphone Mute

Optional parameters, values, and choices supported:

- privateData
- privateData in the acknowledgement

Miscellaneous Characteristics:

- Service Request Acknowledgement Model (Atomic [FALSE] or Multi-Step [TRUE])

C.12.21 Set Ringer Status

Optional parameters, values, and choices supported:

- ringerMode (ringing, not ringing)
- ringVolume (ringVolAbs, ringVolInc)
- privateData
- privateData in the acknowledgement

Miscellaneous Characteristics:

- Service Request Acknowledgement Model (Atomic [FALSE] or Multi-Step [TRUE])

C.12.22 Set Speaker Mute

Optional parameters, values, and choices supported:

- privateData
- privateData in the acknowledgement

Miscellaneous Characteristics:

- Service Request Acknowledgement Model (Atomic [FALSE] or Multi-Step [TRUE])

--`,,```,,,,````-`-`,,`,,`,`,,`---
© ISO/IEC 2007 – All rights reserved
Copyright International Organization for Standardization
Provided by IHS under license with ISO
No reproduction or networking permitted without license from IHS
Not for Resale

C.12.23 Set Speaker Volume

Optional parameters, values, and choices supported:

- speakerVolume (speakerVolAbs, speakerVolInc)
- privateData
- privateData in the acknowledgement

Miscellaneous Characteristics:

- Service Request Acknowledgement Model (Atomic [FALSE] or Multi-Step [TRUE])
- The speaker volume is reset after every call.
- The setting of the speaker volume is not allowed while participating in an active call.

C.13 PhysDevEvtsList

The PhysDevEvtsList parameter type specifies the physical device feature events that are supported by the switching function.

C.13.1 Button Information

Optional parameters, values, and choices supported:

- buttonLabel
- buttonAssociatedNumber
- buttonPressIndicator
- privateData

C.13.2 Button Press

Optional parameters, values, and choices supported:

- buttonLabel
- buttonAssociatedNumber
- privateData

C.13.3 Display Updated

Optional parameters, values, and choices supported:

- characterSet (aSCII, unicode, proprietary)
- privateData

C.13.4 Hookswitch

Optional parameters, values, and choices supported:

- privateData

© ISO/IEC 2007 – All rights reserved

Copyright International Organization for Standardization
Provided by IHS under license with ISO
No reproduction or networking permitted without license from IHS
Not for Resale

C.13.5 Lamp Mode

Optional parameters, values, and choices supported:

- lampMode (brokenFlutter, flutter, off, steady, wink, unknown, sf0 through sf94)
- lampBrightness (unspecifiedNormal, dim, bright)
- lampColor (noColor, red, yellow, green, blue, unknown, sf0 through sf94)
- privateData

C.13.6 Message Waiting

Optional parameters, values, and choices supported:

- deviceForMessage
- privateData

C.13.7 Microphone Gain

Optional parameters, values, and choices supported:

- microphoneGain (micGainAbs, micGainInc)
- privateData

C.13.8 Microphone Mute

Optional parameters, values, and choices supported:

- privateData

C.13.9 Ringer Status

Optional parameters, values, and choices supported:

- ringerMode (ringing, not ringing)
- ringCount
- ringDuration
- ringPattern
- ringVolume (ringVolAbs, ringVolInc)
- privateData

C.13.10 Speaker Mute

Optional parameters, values, and choices supported:

- privateData

C.13.11 Speaker Volume

Optional parameters, values, and choices supported:

© ISO/IEC 2007 – All rights reserved

Copyright International Organization for Standardization
Provided by IHS under license with ISO
No reproduction or networking permitted without license from IHS
Not for Resale

- speakerVolume (speakerVolAbs, speakerVolInc)
- privateData

C.14 LogicalServList

The LogicalServList parameter type specifies the logical device feature services that are supported by the switching function.

C.14.1 Call Back Non-Call-Related

Optional parameters, values, and choices supported:

- privateData
- privateData in the acknowledgement

Miscellaneous Characteristics:

- Do additional Call Back Non-Call-Related service requests for the same originating and target devices result in a negative acknowledgement?
- Service Request Acknowledgement Model (Atomic [FALSE] or Multi-Step [TRUE])

C.14.2 Call Back Message Non-Call-Related

Optional parameters, values, and choices supported:

- privateData
- privateData in the acknowledgement

Miscellaneous Characteristics:

- Do additional Call Back Message Non-Call-Related service requests for the same originating and target devices result in a negative acknowledgement?
- Service Request Acknowledgement Model (Atomic [FALSE] or Multi-Step [TRUE])

C.14.3 Cancel Call Back

Optional parameters, values, and choices supported:

- privateData
- privateData in the acknowledgement

Miscellaneous Characteristics:

- Service Request Acknowledgement Model (Atomic [FALSE] or Multi-Step [TRUE])
- Does the switching function support clearing of all Call Back features at a device (e.g., supporting a null format Device ID)?

C.14.4 Cancel Call Back Message

Optional parameters, values, and choices supported:

- privateData

© ISO/IEC 2007 – All rights reserved

Copyright International Organization for Standardization
Provided by IHS under license with ISO
No reproduction or networking permitted without license from IHS
Not for Resale

- privateData in the acknowledgement

Miscellaneous Characteristics:

- Service Request Acknowledgement Model (Atomic [FALSE] or Multi-Step [TRUE])
- Does the switching function support clearing of all Call Back Message features at a device (e.g., supporting a null format Device ID)?

C.14.5 Get Agent State

Optional parameters, values, and choices supported:

- acdGroup
- privateData
- agentStateList (Agent ID) in the acknowledgement
- agentInfo (pendingAgentState, agentStateCondition (forcedPause, pause)) in the acknowledgement
- privateData in the acknowledgement

C.14.6 Get Auto Answer

Optional parameters, values, and choices supported:

- privateData
- numberOfRings in the acknowledgement
- privateData in the acknowledgement

C.14.7 Get Auto Work Mode

Optional parameters, values, and choices supported:

- privateData
- autoWorkInterval in the acknowledgement
- privateData in the acknowledgement

C.14.8 Get CallBack

Optional parameters, values, and choices supported:

- privateData
- privateData in the acknowledgement

C.14.9 Get Caller ID Status

Optional parameters, values, and choices supported:

- privateData
- privateData in the acknowledgement

© ISO/IEC 2007 – All rights reserved

Copyright International Organization for Standardization
Provided by IHS under license with ISO
No reproduction or networking permitted without license from IHS
Not for Resale

C.14.10 Get Do Not Disturb

Optional parameters, values, and choices supported:

- privateData
- callOrigination parameter, callOrigination (internal, external) in the acknowledgement
- callingDeviceList in the acknowledgement
- privateData in the acknowledgement

C.14.11 Get Forwarding

Optional parameters, values, and choices supported:

- privateData
- forwardList (forwardImmediate, forwardBusy, forwardDND, forwardNoAns, forwardBusyInt, forwardBusyExt, forwardDNDInt, forwardDNDExt, forwardNoAnsInt, forwardNoAnsExt, forwardImmInt, forwardImmExt) in the acknowledgement
- forwardDN in the acknowledgement
- forwardDefault (defaultForwardingTypeAndForwardingDN, defaultForwardingType, defaultForwardDN) in the acknowledgement
- ringCount in the acknowledgement
- ringDuration in the ackknowledgement
- privateData in the acknowledgement

C.14.12 Get Last Number Dialed

Optional parameters, values, and choices supported:

- privateData
- privateData in the acknowledgement

C.14.13 Get Routeing Mode

Optional parameters, values, and choices supported:

- privateData
- privateData in the acknowledgement

C.14.14 Set Agent State

Optional parameters, values, and choices supported:

- requestedAgentState (loggedOn, loggedOff, notReady, ready, workingAfterCall)
- agentID
- password
- group
- privateData

© ISO/IEC 2007 – All rights reserved

Copyright International Organization for Standardization
Provided by IHS under license with ISO
No reproduction or networking permitted without license from IHS
Not for Resale

- pendingAgentState (workingAfterCall, notReady, null) in the acknowledgement
- privateData in the acknowledgement

Miscellaneous Characteristics:

- Service Request Acknowledgement Model (Atomic [FALSE] or Multi-Step [TRUE])
- Does the switching function allow a group (ACD group) device in the service request (i.e. service applies to all agents associated with the ACD group)?
- Does the switching function allow an ACD device in the service request (i.e. service applies to all agents associated with the ACD device)?
- Does the switching function delay transition to the requestedAgentState if it is Busy (i.e. support the pending agent state)?
- Does the switching function delay transition to the requestedAgentState if it is WorkingAfterCall(i.e. support the pending agent state)?

C.14.15 Set Auto Answer

Optional parameters, values, and choices supported:

- numberOfRings
- privateData
- privateData in the acknowledgement

Miscellaneous Characteristics:

- Service Request Acknowledgement Model (Atomic [FALSE] or Multi-Step [TRUE])

C.14.16 Set Auto Work Mode

Optional parameters, values, and choices supported:

- autoWorkInterval
- privateData
- privateData in the acknowledgement

Miscellaneous Characteristics:

- Service Request Acknowledgement Model (Atomic [FALSE] or Multi-Step [TRUE])
- Does the switching function allow a group (ACD group) device in the service request (i.e. service applies to all agents associated with the ACD group)?
- Does the switching function allow an ACD device in the service request (i.e. service applies to all agents associated with the ACD device)?

C.14.17 Set Caller ID Status

Optional parameters, values, and choices supported:

- privateData
- privateData in the acknowledgement

Miscellaneous Characteristics:

© ISO/IEC 2007 – All rights reserved
Copyright International Organization for Standardization
Provided by IHS under license with ISO
No reproduction or networking permitted without license from IHS
Not for Resale

- Service Request Acknowledgement Model (Atomic [FALSE] or Multi-Step [TRUE])

C.14.18 Set Do Not Disturb

Optional parameters, values, and choices supported:

- callOrigination parameter, callOrigination (internal, external)
- callingDeviceList
- privateData
- privateData in the acknowledgement

Miscellaneous Characteristics:

- Service Request Acknowledgement Model (Atomic [FALSE] or Multi-Step [TRUE])

C.14.19 Set Forwarding

Optional parameters, values, and choices supported:

- forwardingType (forwardImmediate, forwardBusy, forwardDND, forwardNoAns, forwardBusyInt, forwardBusyExt, forwardDNDInt, forwardDNDExt, forwardNoAnsInt, forwardNoAnsExt, forwardImmInt, forwardImmExt)
- forwardDN
- ringCount
- ringDuration
- privateData
- privateData in the acknowledgement

Miscellaneous Characteristics:

- Service Request Acknowledgement Model (Atomic [FALSE] or Multi-Step [TRUE])

C.14.20 Set Routeing Mode

Optional parameters, values, and choices supported:

- privateData
- privateData in the acknowledgement

Miscellaneous Characteristics:

- Service Request Acknowledgement Model (Atomic [FALSE] or Multi-Step [TRUE])

C.15 LogicalEvtsList

The LogicalEvtsList parameter type specifies the logical device feature services that are supported by the switching function.

C.15.1 Agent Busy

Optional parameters, values, and choices supported:

© ISO/IEC 2007 – All rights reserved

Copyright International Organization for Standardization
Provided by IHS under license with ISO
No reproduction or networking permitted without license from IHS
Not for Resale

- agentID
- acdGroup
- pendingAgentState (workingAfterCall, notReady, ready, null)
- cause
- privateData

C.15.2 Agent Logged Off

Optional parameters, values, and choices supported:

- agentID
- acdGroup
- agentPassword
- cause
- privateData

C.15.3 Agent Logged On

Optional parameters, values, and choices supported:

- agentID
- acdGroup
- agentPassword
- cause
- privateData

C.15.4 Agent Not Ready

Optional parameters, values, and choices supported:

- agentID
- acdGroup
- cause
- privateData

C.15.5 Agent Ready

Optional parameters, values, and choices supported:

- agentID
- acdGroup
- cause
- privateData

© ISO/IEC 2007 – All rights reserved

Copyright International Organization for Standardization
Provided by IHS under license with ISO
No reproduction or networking permitted without license from IHS
Not for Resale

C.15.6 Agent Working After Call

Optional parameters, values, and choices supported:

- agentID
- acdGroup
- pendingAgentState (notReady, ready, null)
- cause
- privateData

C.15.7 Auto Answer

Optional parameters, values, and choices supported:

- numberOfRings
- privateData

C.15.8 Auto Work Mode

Optional parameters, values, and choices supported:

- privateData

C.15.9 Call Back

Optional parameters, values, and choices supported:

- privateData

C.15.10 Call Back Message

Optional parameters, values, and choices supported:

- privateData

C.15.11 Caller ID Status

Optional parameters, values, and choices supported:

- privateData

C.15.12 Do Not Disturb

Optional parameters, values, and choices supported:

- callOrigination parameter, callOrigination (internal, external)
- callingDeviceList
- privateData

© ISO/IEC 2007 – All rights reserved
--`,,```,,,,````-`-`,,`,,`,`,,`---

Copyright International Organization for Standardization
Provided by IHS under license with ISO
No reproduction or networking permitted without license from IHS
Not for Resale

C.15.13 Forwarding

Optional parameters, values, and choices supported:

- forwardingType (forwardImmediate, forwardBusy, forwardNoAns, forwardDND, forwardBusyInt, forwardNoAnsInt, forwardNoAnsExt, forwardImmInt, forwardImmExt, forwardDNDInt, forwardDNDExt)
- forwardTo
- forwardDefault (defaultForwardingTypeAndForwardDN, defaultForwardingType, defaultForwardDN)
- ringCount
- ringDuration
- privateData

C.15.14 Routeing Mode

Optional parameters, values, and choices supported:

- privateData

C.16 DeviceMaintEvtsList

The DevicemaintenanceEvtsList parameter type specifies the device maintenance events that are supported by the switching function.

C.16.1 Back In Service

Optional parameters, values, and choices supported:

- cause
- privateData

C.16.2 Device Capabilities Changed

Optional Parameters

- cause
- privateData

C.16.3 Out of Service

Optional parameters, values, and choices supported:

- cause
- privateData

C.16.4 Partially In Service

- device
- cause
- privateData

© ISO/IEC 2007 – All rights reserved

Copyright International Organization for Standardization
Provided by IHS under license with ISO
No reproduction or networking permitted without license from IHS
Not for Resale

C.17 IOServicesServList

The IOServicesServList parameter type specifies the I/O services that are supported by the switching function.

C.17.1 I/O Register

- ioDevice
- privateData
- privateData in the acknowledgement

Miscellaneous Characteristics:

- allIODevices - Does the switching function support the ability to register for all I/O devices within the switching function?

C.17.2 I/O Register Abort

Optional parameters, values, and choices supported:

- privateData

C.17.3 I/O Register Cancel

Optional parameters, values, and choices supported:

- privateData
- privateData in the acknowledgement

C.17.4 Data Path Resumed

Optional parameters, values, and choices supported:

- privateData
- privateData in the acknowledgement

C.17.5 Data Path Suspended

Optional parameters, values, and choices supported:

- privateData
- privateData in the acknowledgement

C.17.6 Fast Data

Optional parameters, values, and choices supported:

- object (device, call)
- dataPathType (text, voice)
- displayAttributes (physicalBaseRowNumber, physicalBaseColumnNumber, offset)
- privateData
- privateData in the acknowledgement

© ISO/IEC 2007 – All rights reserved

Copyright International Organization for Standardization
Provided by IHS under license with ISO
No reproduction or networking permitted without license from IHS
Not for Resale

Miscellaneous characteristics:

- Does the switching function support modifying the relative positions of the logical and physical displays (i.e., scrolling) via this service?

C.17.7 Resume Data Path

Optional parameters, values, and choices supported:

- privateData
- privateData in the acknowledgement

Miscellaneous characteristics:

- Does the switching function send the Data Path Resumed service as the result of this service request?

C.17.8 Send Broadcast Data

Optional parameters, values, and choices supported:

- privateData
- dataPathType (text, voice)
- displayAttributes (physicalBaseRowNumber, physicalBaseColumnNumber, offset)
- privateData in the acknowledgement

Miscellaneous characteristics:

- Does the switching function support modifying the relative positions of the logical and physical displays (i.e., scrolling) via this service?

C.17.9 Send Data

Optional parameters, values, and choices supported:

- displayAttributes (physicalBaseRowNumber, physicalBaseColumnNumber, offset)
- ioCause (terminationCharReceived, charCountReached, timeout, sfTerminated)
- privateData
- privateData in the acknowledgement

Miscellaneous characteristics:

- Does the switching function support modifying the relative positions of the logical and physical displays (i.e., scrolling) via this service?

C.17.10 Send Multicast Data

Optional parameters, values, and choices supported:

- ioData
- displayAttributes (physicalBaseRowNumber, physicalBaseColumnNumber, offset)
- privateData
- privateData in the acknowledgement

--`,,```,,,,````-`-`,,`,,`,`,,`---
© ISO/IEC 2007 – All rights reserved
Copyright International Organization for Standardization
Provided by IHS under license with ISO
No reproduction or networking permitted without license from IHS
Not for Resale

Miscellaneous characteristics:

- Does the switching function support modifying the relative positions of the logical and physical displays (i.e., scrolling) via this service?

C.17.11 Start Data Path

Optional parameters, values, and choices supported:

- object (device, call)
- dataPathDirection (fromCfToObject, fromObjectToCF, biDirectional)
- dataPathType (text, voice)
- numberOfCharsToCollect
- terminationCharacter
- timeout
- privateData
- numberOfCharsToCollect in the acknowledgement
- terminationCharacter in the acknowledgement
- timeout in the acknowledgement
- privateData in the acknowledgement

C.17.12 Stop Data Path

Optional parameters, values, and choices supported:

- privateData
- privateData in the acknowledgement

C.17.13 Suspend Data Path

Optional parameters, values, and choices supported:

- privateData
- privateData in the acknowledgement

C.18 DataCollectionServList

The DataCollectionServList parameter type specifies the Data Collection services that are supported by the switching function.

C.18.1 Data Collected

Optional parameters, values, and choices supported:

- digitsDuration
- digitsPauseDuration

© ISO/IEC 2007 – All rights reserved

Copyright International Organization for Standardization
Provided by IHS under license with ISO
No reproduction or networking permitted without license from IHS
Not for Resale

- toneDetected (beep, billing, busy, carrier, confirmation, dial, faxCNG, hold, howler, intrusion, modemCNG, park, recordWarning, reorder, ringback, silence, sitVC, sitIC, sitRO, sitNC, sf0, sf1, sf2, sf3, sf4, sf5, sf6, sf7, sf8, sf9, sf10, other)
- toneFrequency
- toneDuration
- tonesPauseDuration
- connectionInfo
- dcollCause (flushCharReceived, charCountReached, timeout, sfTerminated)
- privateData
- privateData in the acknowledgement

C.18.2 Data Collection Resumed

Optional parameters, values, and choices supported:

- privateData
- privateData in the acknowledgement

C.18.3 Data Collection Suspended

Optional parameters, values, and choices supported:

- privateData
- privateData in the acknowledgement

C.18.4 Resume Data Collection

Optional parameters, values, and choices supported:

- privateData
- privateData in the acknowledgement

C.18.5 Start Data Collection

Optional parameters, values, and choices supported:

- object (device, call)
- dataCollectionType (digits, telephonyTones)
- digitsReportingCriteria (numChars, flushChar, timeout)
- privateData
- privateData in the acknowledgement

C.18.6 Stop Data Collection

Optional parameters, values, and choices supported:

- privateData

© ISO/IEC 2007 – All rights reserved

Copyright International Organization for Standardization
Provided by IHS under license with ISO
No reproduction or networking permitted without license from IHS
Not for Resale

- privateData in the acknowledgement

C.18.7 Suspend Data Collection

Optional parameters, values, and choices supported:

- privateData
- privateData in the acknowledgement

C.19 VoiceServList

The VoiceServList parameter type specifies the Voice services that are supported by the switching function.

C.19.1 Activate

Optional parameters, values, and choices supported:

- resource
- grammarName
- privateData
- privateData in the acknowledgement

C.19.2 Clear

Optional parameters, values, and choices supported:

- resource
- privateData
- privateData in the acknowledgement

C.19.3 Concatenate Message

Optional parameters, values, and choices supported:

- privateData
- privateData in the acknowledgement

C.19.4 Deactivate

Optional parameters, values, and choices supported:

- resource
- grammarName
- privateData
- privateData in the acknowledgement

C.19.5 Delete Message

Optional parameters, values, and choices supported:

© ISO/IEC 2007 – All rights reserved

Copyright International Organization for Standardization
Provided by IHS under license with ISO
No reproduction or networking permitted without license from IHS
Not for Resale

- privateData
- privateData in the acknowledgement

C.19.6 Play Message

Optional parameters, values, and choices supported:

- duration
- termination parameter, termination (durationExceeded, dtmfDigitDetected, endOfMessageDetected, speechDetected)
- privateData
- privateData in the acknowledgement

Miscellaneous characteristics:

- Can multiple messages be played on the same connection at the same time?

C.19.7 Query Voice Attribute

Optional parameters, values, and choices supported:

- messageToQuery
- resource
- attributeToQuery (encodingAlgorithm, samplingRate, duration, filename, currentPosition, currentSpeed, currentVolume, currentLevel, currentState, grammars, language, mode, retainAudio, silenceTimeout, maxTimeout, babbleTimeout, endSilence, rejectionThreshold, autoInterruptable, innerXML, interdigitTimeout, preflush)
- connection
- duration
- termination parameter, termination (durationExceeded, dtmfDigitDetected, endOfSpeechDetected, speech)
- privateData
- attribute (encodingAlgorithm (aDPCM6K, aDPCM8K, muLawPCM6k, aLawPCM6K), samplingRate, duration, filename, currentPosition, currentSpeed, currentVolAbs, currentGain, currentState, grammars, language, mode(automatic, single, multiple), retainAudio, silenceTimeout, maxTimeout, babbleTimeout, endSilence, rejectionThreshold, autoInterruptable, innerXML, interdigitTimeout, preflush) in the acknowledgement
- privateData in the acknowledgement

C.19.8 Queue

Optional parameters, values, and choices supported:

- message
- resource
- text
- privateData
- privateData in the acknowledgement

© ISO/IEC 2007 – All rights reserved

Copyright International Organization for Standardization
Provided by IHS under license with ISO
No reproduction or networking permitted without license from IHS
Not for Resale

C.19.9 Record Message

Optional parameters, values, and choices supported:

- resource
- samplingRate
- encodingAlgorithm (aDPCM6K, aDPCM8K, muLawPCM6k, aLawPCM6K)
- maxDuration
- termination parameter, termination (durationExceeded, dtmfDigitDetected, endOfDataDetected, speechDetected)
- privateData
- privateData in the acknowledgement

C.19.10 Reposition

Optional parameters, values, and choices supported:

- messageToReposition
- resource
- periodOfReposition (startOfMessage, endOfMessage, relativePointer)
- privateData
- privateData in the acknowledgement

C.19.11 Resume

Optional parameters, values, and choices supported:

- messageToResume
- resource
- duration
- privateData
- privateData in the acknowledgement

C.19.12 Review

Optional parameters, values, and choices supported:

- messageToReview
- resource
- periodToReview (startOfMessage, lengthOfReview)
- privateData
- privateData in the acknowledgement

C.19.13 Set Voice Attribute

Optional parameters, values, and choices supported:

© ISO/IEC 2007 – All rights reserved

Copyright International Organization for Standardization
Provided by IHS under license with ISO
No reproduction or networking permitted without license from IHS
Not for Resale

- message
- resource
- attributeToSet (currentSpeed, currentVolume (currentVolAbs, currentVolInc), currentGain, grammars, language, mode (automatic, single, multiple), retainAudio, silenceTimeout, maxTimeout, babbleTimeout, endSilence, rejectionThreshold, autoInterruptable, innerXML, interdigitTimeout, preflush)
- privateData
- privateData in the acknowledgement

C.19.14 Start

Optional parameters, values, and choices supported:

- resource
- text
- privateData
- privateData in the acknowledgement

C.19.15 Stop

Optional parameters, values, and choices supported:

- messageToBeStopped
- resource
- privateData
- privateData in the acknowledgement

C.19.16 Suspend

Optional parameters, values, and choices supported:

- message
- resource
- privateData
- privateData in the acknowledgement

C.19.17 Synthesize Message

Optional parameters, values, and choices supported:

- gender (male, female)
- privateData
- privateData in the acknowledgement

C.20 VoiceEvtsList

The VoiceEvtsList parameter type specifies the voice events that are supported by the switching function.

© ISO/IEC 2007 – All rights reserved

Copyright International Organization for Standardization
Provided by IHS under license with ISO
No reproduction or networking permitted without license from IHS
Not for Resale

C.20.1 Bookmark Reached

Optional parameters, values, and choices supported:

- resource
- cause
- servicesPermitted
- privateData

C.20.2 Completed

Optional parameters, values, and choices supported:

- resource
- cause
- servicesPermitted
- privateData

C.20.3 DTMF Detected

Optional parameters, values, and choices supported:

- resource
- cause
- servicesPermitted
- privateData

C.20.4 Emptied

Optional parameters, values, and choices supported:

- resource
- cause
- servicesPermitted
- privateData

C.20.5 Interruption Detected

Optional parameters, values, and choices supported:

- resource
- cause
- servicesPermitted
- privateData

C.20.6 Not Recognized

Optional parameters, values, and choices supported:

© ISO/IEC 2007 – All rights reserved

Copyright International Organization for Standardization
Provided by IHS under license with ISO
No reproduction or networking permitted without license from IHS
Not for Resale

- resource
- cause
- servicesPermitted
- privateData

C.20.7 Play

Optional parameters, values, and choices supported:

- message
- resource
- length
- currentPosition
- speed
- cause
- servicesPermitted
- privateData

C.20.8 Recognized

Optional parameters, values, and choices supported:

- resource
- cause
- servicesPermitted
- privateData

C.20.9 Record

Optional parameters, values, and choices supported:

- message
- resource
- length
- currentPosition
- servicesPermitted
- privateData

C.20.10 Review

Optional parameters, values, and choices supported:

- message
- resource
- length

© ISO/IEC 2007 – All rights reserved

Copyright International Organization for Standardization
Provided by IHS under license with ISO
No reproduction or networking permitted without license from IHS
Not for Resale

- currentPosition
- cause
- servicesPermitted
- privateData

C.20.11 Silence Timeout Expired

Optional parameters, values, and choices supported:

- resource
- cause
- servicesPermitted
- privateData

C.20.12 Speech Detected

Optional parameters, values, and choices supported:

- resource
- cause
- servicesPermitted
- privateData

C.20.13 Started

Optional parameters, values, and choices supported:

- resource
- cause
- servicesPermitted
- privateData

C.20.14 Stop

Optional parameters, values, and choices supported:

- message
- resource
- length
- currentPosition
- cause
- servicesPermitted
- privateData

© ISO/IEC 2007 – All rights reserved

Copyright International Organization for Standardization
Provided by IHS under license with ISO
No reproduction or networking permitted without license from IHS
Not for Resale

C.20.15 Suspend Play

Optional parameters, values, and choices supported:

- message
- resource
- length
- currentPosition
- cause
- servicesPermitted
- privateData

C.20.16 Suspend Record

Optional parameters, values, and choices supported:

- message
- resource
- length
- currentPosition
- cause
- servicesPermitted
- privateData

C.20.17 Voice Attribute Changed

Optional parameters, values, and choices supported:

- message
- resource
- playVolume (playVolAbs, playVolInc)
- recordingGain
- speed
- currentPosition
- grammars
- language
- mode
- retainAudio
- silenceTimeout
- maxTimeout
- babbleTimeout
- endSilence
- rejectionThreshold

© ISO/IEC 2007 – All rights reserved

Copyright International Organization for Standardization
Provided by IHS under license with ISO
No reproduction or networking permitted without license from IHS
Not for Resale

- autoInterruptabe
- innerXML
- interdigitTimeout
- preflush
- cause
- privateData

C.20.18 Voice Error Occurred

Optional parameters, values, and choices supported:

- resource
- cause
- servicesPermitted
- privateData

C.21 CDRServList

The CDRServicesServList parameter type specifies the CDR services that are supported by the switching function.

C.21.1 Call Detail Records Notification

Optional parameters, values, and choices supported:

- cdrReason (timeout, thresholdReached, other)
- privateData
- privateData in the acknowledgement

C.21.2 Call Detail Records Report

Optional parameters, values, and choices supported:

- cdrReason (timeout, thresholdReached, other)
- recordNumber
- recordCreationTime
- callingDevice
- calledDevice
- associatedCallingDevice
- associatedcalledDevice
- networkCallingDevice
- networkCalledDevice
- callCharacteristics
- mediaCallCharacteristics

© ISO/IEC 2007 – All rights reserved

Copyright International Organization for Standardization
Provided by IHS under license with ISO
No reproduction or networking permitted without license from IHS
Not for Resale

- chargedDevice (operator, nonOperator)
- recordedCall
- nodeNumber (area0, area1, area2)
- tariffTable
- connectionStart
- connectionEnd
- connectionDuration
- accessCode
- carrier
- selectedRoute
- billingIndicator (normalCharging, reverseCharging, creditCardCharging, callForwarding, callDeflection, callTransfer, other)
- chargingInfo
- suppServiceInfo (normalCall, consultationCall, transferCall, callCompletion, callForwarding, callDiversion, conferencing, intrusion, userUserInfo, other)
- reasonForTerm (normalClearing, unsuccessfulCallAttempt, abnormalTermination, callTransferred, other)
- authCode
- accountInfo
- deviceCategory
- namedDeviceTypes
- operatorDevice
- lastStoredCDRReportSent
- privateData
- privateData in the acknowledgement

C.21.3 Send Stored Call Detail Records

Optional parameters, values, and choices supported:

- timePeriod
- privateData
- privateData in the acknowledgement

C.21.4 Start Call Detail Records Transmission

Optional parameters, values, and choices supported:

- transferMode (transferAtEndOfCall, transferOnRequest, transferOnThresholdReached)
- privateData
- privateData in the acknowledgement

--`,,```,,,,````-`-`,,`,,`,`,,`---
© ISO/IEC 2007 – All rights reserved
Copyright International Organization for Standardization
Provided by IHS under license with ISO
No reproduction or networking permitted without license from IHS
Not for Resale

C.21.5 Stop Call Detail Records Transmission

Optional parameters, values, and choices supported:

- cdrTermReason (endOfDataDetected, errorDetected, thresholdReached, other)
- privateData
- privateData in the acknowledgement

Miscellaneous characteristics:

- Does the switching function generate this service request?
- Does the switching function support receiving this request?

C.22 VendorSpecificServList

The VendorSpecificServList parameter type specifies the vendor specific extension services which the switching function might request/send from the computing function or that the switching function supports from the computing function.

C.22.1 Escape Register

Optional parameters, values, and choices supported:

- privateData
- privateData in the acknowledgement

C.22.2 Escape Register Abort

Optional parameters, values, and choices supported:

- privateData
- privateData in the acknowledgement

C.22.3 Escape Register Cancel

Optional parameters, values, and choices supported:

- privateData
- privateData in the acknowledgement

C.22.4 Escape

Optional parameters, values, and choices supported:

- privateData in the acknowledgement

Miscellaneous Characteristics:

- Does the switching function generate this service request?
- Does the switching function support receiving this service request?

--`,,```,,,,````-`-`,,`,,`,`,,`---
© ISO/IEC 2007 – All rights reserved

Copyright International Organization for Standardization
Provided by IHS under license with ISO
No reproduction or networking permitted without license from IHS
Not for Resale

C.22.5 Private Data Version Selection

Optional parameters, values, and choices supported:

- privateData in the acknowledgement

C.23 VendorSpecificEvtsList

The VendorSpecificEvtsList parameter type specifies the vendor specific events that are supported by the switching function.

C.23.1 Private Event

None.

© ISO/IEC 2007 – All rights reserved

Copyright International Organization for Standardization
Provided by IHS under license with ISO
No reproduction or networking permitted without license from IHS
Not for Resale

Annex D
(informative)

Connection State Transition Examples

This annex contains examples that describes the connection state transitions specified in 6.1.3, “Connection”.

--`,,```,,,,````-`-`,,`,,`,`,,`---

© ISO/IEC 2007 – All rights reserved

Copyright International Organization for Standardization
Provided by IHS under license with ISO
No reproduction or networking permitted without license from IHS
Not for Resale

Copyright International Organization for Standardization
Provided by IHS under license with ISO
No reproduction or networking permitted without license from IHS

Not for Resale

Table D-1 Connection State Transition Call Flow Examples

State Change	Action	Initial State	Final State	Comments
(D1) Null -> Initiated	A device goes off-hook or the computing function issues a Make Call service and the calling device is prompted.	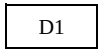	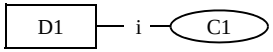	
(D3) Null -> Queued	Device D2 parks the call to another device (D3).	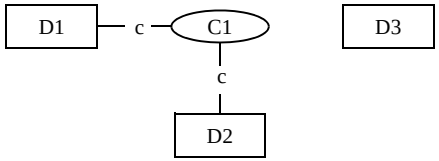	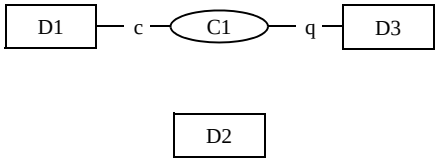	
(D1) Null -> Connected	The computing function issues a Make Call service request. The switching function sends the Originated event for the calling device.	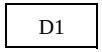	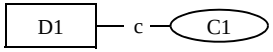	The calling device is an Auto Answer device therefore no Service Initiated event is seen prior to the Originated event.
(D2) Null -> Fail	Device D1 dials Device D2. Device D2 is currently active in another call and can not accept D1's call. D1 hears a busy tone.			
(D2) Null -> Alerting	Switching function alerts a device. This could be the result of a Make Call service and the called device is being alerted.	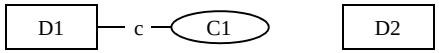		The switching function could alert a device that originates outside the device's switching domain.

© ISO/IEC 2007 – All rights reserved

Copyright International Organization for Standardization
Provided by IHS under license with ISO
No reproduction or networking permitted without license from IHS
© ISO/IEC 2007 – All rights reserved
Not for Resale

Table D-1 Connection State Transition Call Flow Examples(Continued)

State Change	Action	Initial State	Final State	Comments
(D2) Null -> Null	Device D1 dials Device D2. Device D2 is busy on another call and cannot accept D1's call. The call is immediately forwarded and moves to the new device without ever creating a connection at D2. To report this, a Diverted event shall be based on a Null->Null transition.			
(D1) Initiated -> Null	A device that was taken off-hook is placed back on-hook before any actions are taken.	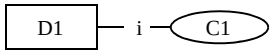	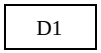	
(D1) Initiated -> Fail	A device that was taken off-hook is left off-hook without entering any digits. After a time-out period, the device receives the reorder tone and the computing function receives the Failed event.	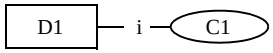	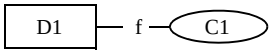	

Copyright International Organization for Standardization
Provided by IHS under license with ISO
No reproduction or networking permitted without license from IHS

Not for Resale

Table D-1 Connection State Transition Call Flow Examples(Continued)

State Change	Action	Initial State	Final State	Comments
(D1) Initiated -> Connected	A device goes off-hook and finishes dialling. A call is originated to another device and the computing function receives an Originated event.	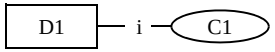	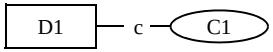	
(D1) Initiated -> Alerting	Device D1 is the calling device in a predictive call. Before any activity at D2, the D1C1 connection goes to initiated. After D2 is connected into the call, D1 is alerted.			
(D1) Initiated -> Queued	Device D1 is the calling device in a predictive call. Before any activity at D2, the D1C1 connection goes to initiated. After D2 is connected into the call, the call is queued at D1 (D1 is busy on another call).			

© ISO/IEC 2007 – All rights reserved

Copyright International Organization for Standardization
Provided by IHS under license with ISO
No reproduction or networking permitted without license from IHS
© ISO/IEC 2007 – All rights reserved
Not for Resale

Table D-1 Connection State Transition Call Flow Examples(Continued)

State Change	Action	Initial State	Final State	Comments
(D2) Queued -> Null	A calling device can be queued to an ACD device or queued due to a Campon situation. The call moves from the queued device to a device that accepts the call. The computing function receives a Diverted event.		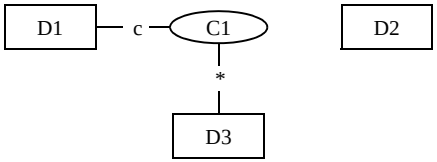	
(D2) Queued -> Alerting	A device that has a camped on call clears from its active call and is alerted by the camped on call.			
(D2) Queued -> Fail	A call is queued to an ACD device and then ACD becomes unstaffed with no alternate routeing for queued calls on an unstaffed condition.			
(D2) Queued -> Hold	An appearance of a shared bridged device configuration that is in the inactive mode has been placed on hold as a result of actions by another appearance in the device configuration.			

Copyright International Organization for Standardization
Provided by IHS under license with ISO
No reproduction or networking permitted without license from IHS
Not for Resale

Table D-1 Connection State Transition Call Flow Examples(Continued)

State Change	Action	Initial State	Final State	Comments
(D2) Queued -> Connected	A call has been parked at device D2. The computing function successfully issues the Answer Call service for device D2.			
(D1) Connected -> Null	A device in a two-party call manually goes on-hook or a Clear Connection service is successfully invoked on behalf of this device.			
(D1) Connected -> Fail	A device that was in a two-party call stays off-hook after the other device goes on-hook. After a time-out period, the device receives the blocked tone and the computing function receives the Failed event.			
(D1) Connected -> Hold	A device in a two-party call manually places the other device on hold or the Hold Call service is successfully executed.			Device D1 is the device placing the call on hold.

© ISO/IEC 2007 – All rights reserved

© ISO/IEC 2007 – All rights reserved

Table D-1 Connection State Transition Call Flow Examples(Continued)

State Change	Action	Initial State	Final State	Comments
(D2) Connected -> Queued	In a shared bridged configuration, Device D2 goes on-hook while another appearance in the bridged configuration remains connected to the call.		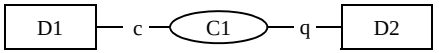	
(D2) Hold -> Alerting	A held or consulted call returns to a device because of a time-out.		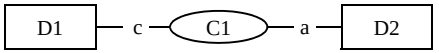	
(D1) Hold -> Connected	A device that has previously placed another device on hold manually retrieves the held device or the Reconnect or Retrieve Call service is successfully executed.		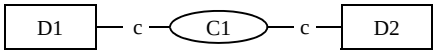	Device D1 is the device that retrieves the call.
(D1) Hold -> Null	A device that has previously placed another device on hold manually goes on-hook or the Clear Connection service is successfully executed for the holding device.		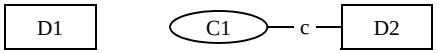	

Copyright International Organization for Standardization
Provided by IHS under license with ISO
No reproduction or networking permitted without license from IHS
Not for Resale

Table D-1 Connection State Transition Call Flow Examples(Continued)

State Change	Action	Initial State	Final State	Comments
(D2) Hold -> Queued	A held appearance of a shared bridged device configuration is retrieved from hold and is placed in the inactive mode as a result of actions by another appearance in the device configuration.			
(D2) Hold -> Fail	A device that has previously placed another device on hold has exceeded the holding timer and has transitioned to the Fail state.			
(D2) Fail -> Connected	A device intrudes into a call that first failed because the called device was busy.			
(D2) Fail -> Alerting	A called device that was busy begins to alert.			
(D2) Fail -> Hold	An exclusive-bridged appearance has placed a call on hold and the other appearances which were blocked from use, transition to the hold state as well.			
(D2) Fail -> Queued	A called device is busy. The calling device camps on to the called device.			

© ISO/IEC 2007 – All rights reserved

Copyright International Organization for Standardization
Provided by IHS under license with ISO
No reproduction or networking permitted without license from IHS
© ISO/IEC 2007 – All rights reserved
Not for Resale

Table D-1 Connection State Transition Call Flow Examples(Continued)

State Change	Action	Initial State	Final State	Comments
(D2) Fail -> Null	A device is busy. The calling device goes back on-hook.			
(D2) Alerting -> Null	A call is delivered to a device. Before the called device answers, the calling device goes on-hook.			
(D2) Alerting -> Queued	A call is delivered to an ACD device. No agents are available so the call queues at the ACD device.		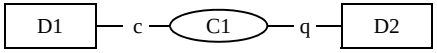	
(D2) Alerting -> Connected	A call delivered to a device. The called device either manually answers the call or the Answer Call service is used.		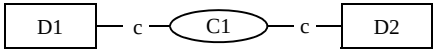	
(D2) Alerting -> Alerted	A call has been offered to a device. After a timeout the call is delivered to the same device.			
(D2) Alerting -> Fail	A call is alerting a device. That device is removed from service and there is no coverage or redirection criteria for this situation.			

Annex E
(informative)

Summary of changes in this edition

1. 2.1.3.12 & 2.1.3.13 & 13.1.4: New Basic Speech Service and Advanced Speech Service profiles
2. 6.1.1.4.5 & 13.1.2 & 13.1.3 & 13.1.5 & 13.1.6: Added Agent attribute to Group Device Category
3. 10.1.2 & 13.1.4: resourceID attribute added to SFR DeviceID format
4. 12.2.4 & 13.1.4: Call Characteristics parameter type:
   a. modified definition of directAgent
   b. added encryptedCall
5. 17.1.7 & Annex C: Clear Call service - added reason parameter
6. 17.1.18 & Annex C: Make Call service - added reason parameter
7. 18.1.1 & Annex C: Associate Data service - added deviceInfo parameter
8. 18.2.1 & Annex C: Call Information event - added deviceInfo parameter
9. 21.1.11, 21.2.9, 22.1.10, 22.1.18, 22.2.13 & Annex C: Get Ringer Status service, Ring Status event, Get Forwarding service, Set Forwarding service, Forwarding event - added ringDuration parameter.
10. 22.1.8 & Annex C: New Get CallBack service

© ISO/IEC 2007 – All rights reserved

Copyright International Organization for Standardization
Provided by IHS under license with ISO
No reproduction or networking permitted without license from IHS
Not for Resale

--`,,```,,,,````-`-`,,`,,`,`,,`---

Copyright International Organization for Standardization
Provided by IHS under license with ISO
No reproduction or networking permitted without license from IHS
Not for Resale

ICS 35.100.30

Price based on 397 pages

© ISO/IEC 2007 – All rights reserved
Copyright International Organization for Standardization
Provided by IHS under license with ISO
No reproduction or networking permitted without license from IHS
Not for Resale