INTERNATIONAL STANDARD

ISO/IEC 18033-3

First edition
2005-07-01

Information technology — Security techniques — Encryption algorithms —

Part 3: Block ciphers

Technologies de l'information — Techniques de sécurité — Algorithmes de chiffrement —

Partie 3: Chiffrement par blocs

Reference number
ISO/IEC 18033-3:2005(E)

© ISO/IEC 2005

Copyright International Organization for Standardization
Reproduced by IHS under license with ISO
No reproduction or networking permitted without license from IHS

Not for Resale

PDF disclaimer

This PDF file may contain embedded typefaces. In accordance with Adobe's licensing policy, this file may be printed or viewed but shall not be edited unless the typefaces which are embedded are licensed to and installed on the computer performing the editing. In downloading this file, parties accept therein the responsibility of not infringing Adobe's licensing policy. The ISO Central Secretariat accepts no liability in this area.

Adobe is a trademark of Adobe Systems Incorporated.

Details of the software products used to create this PDF file can be found in the General Info relative to the file; the PDF-creation parameters were optimized for printing. Every care has been taken to ensure that the file is suitable for use by ISO member bodies. In the unlikely event that a problem relating to it is found, please inform the Central Secretariat at the address given below.

© ISO/IEC 2005

All rights reserved. Unless otherwise specified, no part of this publication may be reproduced or utilized in any form or by any means, electronic or mechanical, including photocopying and microfilm, without permission in writing from either ISO at the address below or ISO's member body in the country of the requester.

ISO copyright office
Case postale 56 • CH-1211 Geneva 20
Tel. + 41 22 749 01 11
Fax + 41 22 749 09 47
E-mail copyright@iso.org
Web www.iso.org

Published in Switzerland

--`,,```,,,-`-`,,`,,`,`,,`---

Copyright International Organization for Standardization
Reproduced by IHS under license with ISO
No reproduction or networking permitted without license from IHS

Not for Resale

© ISO/IEC 2005 – All rights reserved

Contents

Page

Foreword v

Introduction vi

1 Scope 1

2 Terms and definitions 1

3 Symbols 2

4 64-bit block ciphers 2
4.1 TDEA 3
4.1.1 TDEA encryption/decryption 3
4.1.2 TDEA keying options 3
4.2 MISTY1 3
4.2.1 MISTY1 encryption 3
4.2.2 MISTY1 decryption 4
4.2.3 MISTY1 functions 4
4.2.4 MISTY1 key schedule 9
4.3 CAST-128 10
4.3.1 CAST-128 encryption 10
4.3.2 CAST-128 decryption 10
4.3.3 CAST-128 functions 10
4.3.4 CAST-128 key schedule 17

5 128-bit block ciphers 20
5.1 AES 20
5.1.1 AES encryption 20
5.1.2 AES decryption 21
5.1.3 AES transformations 21
5.1.4 AES key schedule 26
5.2 Camellia 27
5.2.1 Camellia encryption 27
5.2.2 Camellia decryption 29
5.2.3 Camellia functions 32
5.2.4 Camellia key schedule 38
5.3 SEED 42
5.3.1 SEED encryption 42
5.3.2 SEED decryption 42
5.3.3 SEED functions 43
5.3.4 SEED key schedule 46

Annex A (normative) **Description of DES** 47
A.1. DES encryption 47
A.2. DES decryption 47
A.3. DES functions 47
A.3.1 Initial permutation *IP* 47
A.3.2 Inverse initial permutation IP^{-1} 48
A.3.3 Function *f* 49
A.3.4 Expansion permutation *E* 49
A.3.5 Permutation *P* 50
A.3.6 S-Boxes 50
A.4 DES key schedule (*KS*) 51

Annex B (normative) **ASN.1 module** 53

Annex C (informative) **Algebraic forms of MISTY1 and Camellia S-boxes** 55
C.1 MISTY1 S-boxes 55

© ISO/IEC 2005 All rights reserved
Copyright International Organization for Standardization
Reproduced by IHS under license with ISO
No reproduction or networking permitted without license from IHS
Not for Resale

C.1.1 MISTY1 S-box S_7 ..... **55**
C.1.2 MISTY1 S-box S_9 ..... **55**
C.2 Camellia S-box **55**

Annex D (informative) **Test vectors** **57**
D.1 TDEA test vectors **57**
D.1.1 TDEA encryption **57**
D.1.2 DES encryption and decryption **58**
D.2 MISTY1 test vectors **59**
D.3 CAST-128 test vectors **60**
D.4 AES test vectors **60**
D.4.1 AES encryption **60**
D.4.2 Key expansion example **61**
D.4.3 Cipher example **63**
D.5 Camellia test vectors **65**
D.5.1 Camellia encryption **65**
D.6 SEED test vectors **68**

Annex E (informative) **Feature table** **70**

Bibliography **71**

--`,,`,,-`-`,,`,,`,`,,`---
Copyright International Organization for Standardization
Reproduced by IHS under license with ISO
No reproduction or networking permitted without license from IHS
Not for Resale
© ISO/IEC 2005 – All rights reserved

Foreword

ISO (the International Organization for Standardization) and IEC (the International Electrotechnical Commission) form the specialized system for worldwide standardization. National bodies that are members of ISO or IEC participate in the development of International Standards through technical committees established by the respective organization to deal with particular fields of technical activity. ISO and IEC technical committees collaborate in fields of mutual interest. Other international organizations, governmental and non-governmental, in liaison with ISO and IEC, also take part in the work. In the field of information technology, ISO and IEC have established a joint technical committee, ISO/IEC JTC 1.

International Standards are drafted in accordance with the rules given in the ISO/IEC Directives, Part 2.

The main task of the joint technical committee is to prepare International Standards. Draft International Standards adopted by the joint technical committee are circulated to national bodies for voting. Publication as an International Standard requires approval by at least 75 % of the national bodies casting a vote.

Attention is drawn to the possibility that some of the elements of this document may be the subject of patent rights. ISO and IEC shall not be held responsible for identifying any or all such patent rights.

ISO/IEC 18033-3 was prepared by Joint Technical Committee ISO/IEC JTC 1, *Information technology*, Subcommittee SC 27, *IT Security techniques*.

ISO/IEC 18033 consists of the following parts, under the general title *Information technology — Security techniques — Encryption algorithms*:

— *Part 1: General*

— *Part 2: Asynnetric ciphers*

— *Part 3: Block ciphers*

— *Part 4: Stream ciphers*

© ISO/IEC 2005 All rights reserved

Copyright International Organization for Standardization
Reproduced by IHS under license with ISO
No reproduction or networking permitted without license from IHS
Not for Resale

Introduction

The International Organization for Standardization (ISO) and International Electrotechnical Commission (IEC) draw attention to the fact that it is claimed that compliance with this document may involve the use of patents.

The ISO and IEC take no position concerning the evidence, validity and scope of this patent right.

The holder of this patent right has assured the ISO and IEC that he is willing to negotiate licences under reasonable and non-discriminatory terms and conditions with applicants throughout the world. In this respect, the statement of the holder of this patent right is registered with the ISO and IEC. Information may be obtained from:

ISO/IEC JTC 1/SC 27 Standing Document 8 (SD8) "Patent Information"

Standing Document 8 (SD8) is available at http://www.ni.din.de/sc27

Attention is drawn to the possibility that some of the elements of this document may be the subject of patent rights other than those identified above. ISO and IEC shall not be held responsible for identifying any or all such patent rights.

© ISO/IEC 2005 – All rights reserved
Copyright International Organization for Standardization
Reproduced by IHS under license with ISO
No reproduction or networking permitted without license from IHS
Not for Resale

Information technology — Security techniques — Encryption algorithms —

Part 3: Block ciphers

1 Scope

This part of ISO/IEC 18033 specifies block ciphers. A block cipher maps blocks of *n* bits to blocks of *n* bits, under the control of a key of *k* bits. A total of six different block ciphers are defined. They are categorized in Table 1.

Table 1. Block ciphers specified

Block length	Algorithm name (Clause #)	Key length
64 bits	TDEA (4.1)	128 or 192 bits
	MISTY1 (4.2)	128 bits
	CAST-128 (4.3) [1]	
128 bits	AES (5.1)	128, 192 or 256 bits
	Camellia (5.2)	
	SEED (5.3)	128 bits

The algorithms specified in this part of ISO/IEC 18033 have been assigned object identifiers in accordance with ISO/IEC 9834. The list of assigned object identifiers is given in Annex B. Any changes to the specification of the algorithms resulting in a change of functional behaviour will result in a change of the object identifier assigned to the algorithm.

2 Terms and definitions

For the purposes of this document, the following terms and definitions apply.

2.1
block
string of bits of defined length. [ISO/IEC 18033-1:2004]

NOTE – In this part of ISO/IEC 18033, the block length is either 64 or 128 bits.

2.2
block cipher
symmetric encipherment system with the property that the encryption algorithm operates on a block of plaintext, i.e. a string of bits of a defined length, to yield a block of ciphertext. [ISO/IEC 18033-1:2004]

2.3
ciphertext
data which has been transformed to hide its information content. [ISO/IEC 9798-1:1997]

[1] The key length of the original version of CAST-128 is variable from 40 bits to 128 bits. This part of ISO/IEC 18033, however, specifies its use only with keys of 128 bits.

© ISO/IEC 2005 – All rights reserved

Copyright International Organization for Standardization
Reproduced by IHS under license with ISO
No reproduction or networking permitted without license from IHS
Not for Resale

2.4
key
sequence of symbols that controls the operation of a cryptographic transformation (e.g. encipherment, decipherment). [ISO/IEC 11770-1:1996]

NOTE – In all the ciphers specified in this part of ISO/IEC18033, keys consist of a sequence of bits.

2.5
***n*-bit block cipher**
block cipher with the property that plaintext blocks and ciphertext blocks are *n* bits in length. [ISO/IEC 10116:1997]

2.6
plaintext
unenciphered information. [ISO/IEC 9797-1:1999]

3 Symbols

n – plaintext/ciphertext bit length for a block cipher.

E_K – encryption function with key *K*.

D_K – decryption function with key *K*.

Nr – the number of rounds for the AES algorithm, which is 10, 12 or 14 for the choices of key length 128, 192 or 256 bits respectively.

Nk – the number of 32-bit words comprising a key for the AES algorithm, which is 4, 6 or 8 for the choices of key length 128, 192 or 256 bits respectively.

$\oplus$ – the bit-wise logical exclusive-OR operation on bit-strings, i.e., if *A*, *B* are strings of the same length then $A \oplus B$ is the string equal to the bit-wise logical exclusive-OR of *A* and *B*.

$\wedge$ –the bit-wise logical AND operation on bit-strings, i.e., if *A*, *B* are strings of the same length then $A \wedge B$ is the string equal to the bit-wise logical AND of *A* and *B*.

$\vee$ – the bit-wise logical OR operation on bit-strings, i.e., if *A, B* are strings of the same length then $A \vee B$ is the string equal to the bit-wise logical OR of *A* and *B*.

|| – concatenation of bit strings.

$\bullet$ – finite field multiplication.

$<<<_i$ – the left circular rotation of the operand by *i* bits.

$>>>_i$ – the right circular rotation of the operand by *i* bits.

$\overline{x}$ – the bitwise complement of *x*.

4 64-bit block ciphers

In this clause, three 64-bit block ciphers are specified; TDEA (or 'Triple DES') in clause 4.1, MISTY1 in clause 4.2 and CAST-128 in clause 4.3.

Users authorized to access data that has been enciphered must have the key that was used to encipher the data in order to decipher it. The algorithm is designed to encipher and decipher blocks of data consisting of 64 bits under control of a 128- (or 192-) bit key. Deciphering must be accomplished using the same key as for enciphering.

© ISO/IEC 2005 — All rights reserved
Copyright International Organization for Standardization
Reproduced by IHS under license with ISO
No reproduction or networking permitted without license from IHS
Not for Resale

4.1 TDEA

The Triple Data Encryption Algorithm (TDEA) is a symmetric cipher that can process data blocks of 64 bits, using cipher keys with length of 128 (or 192) bits, of which 112 (or 168) bits can be chosen arbitrarily, and the rest may be used for error detection. The TDEA is commonly known as Triple DES (Data Encryption Standard).

A TDEA encryption/decryption operation is a compound operation of DES encryption and decryption operations, where the DES algorithm is specified in Annex A. A TDEA key consists of three DES keys.

4.1.1 TDEA encryption/decryption

The TDEA is defined in terms of DES operations, where E_K is the DES encryption operation for the key K and D_K is the DES decryption operation for the key K.

4.1.1.1 TDEA encryption

The transformation of a 64-bit block P into a 64-bit block C is defined as follows:

$$C = E_{K_3}(D_{K_2}(E_{K_1}(P))).$$

4.1.1.2 TDEA decryption

The transformation of a 64-bit block C into a 64-bit block P is defined as follows:

$$P = D_{K_1}(E_{K_2}(D_{K_3}(C))).$$

4.1.2 TDEA keying options [2]

This part of ISO/IEC 18033 specifies the following keying options for TDEA. The TDEA key comprises the triple (K_1, K_2, K_3).

1. Keying Option 1: K_1, K_2 and K_3 are different DES keys;

2. Keying Option 2: K_1 and K_2 are different DES keys and $K_3 = K_1$.

NOTE – The option that $K_1 = K_2 = K_3$, the single-DES equivalent, is not recommended. Furthermore, the use of keying option 1 is preferred over keying option 2 since it provides additional security at the same performance level.

4.2 MISTY1

The MISTY1 algorithm is a symmetric block cipher that can process data blocks of 64 bits, using a cipher key with length of 128 bits.

4.2.1 MISTY1 encryption

The encryption operation is as shown in Figure 1. The transformation of a 64-bit block P into a 64-bit block C is defined as follows (*KL*, *KO* and *KI* are keys):

[2] The Keying Option 2 is approved only through the year 2009 by NIST.

© ISO/IEC 2005 – All rights reserved

Copyright International Organization for Standardization
Reproduced by IHS under license with ISO
No reproduction or networking permitted without license from IHS
Not for Resale

(1) $P = L_0 \,||\, R_0$

$KL = KL_1 \,||\, KL_2 \,||\, \ldots \,||\, KL_{10}$

$KO = KO_1 \,||\, KO_2 \,||\, \ldots \,||\, KO_8$

$KI = KI_1 \,||\, KI_2 \,||\, \ldots \,||\, KI_8$

(2) for i = 1, 3, …, 7 (increment in steps of 2 because the loop body consists of two rounds):

$R_i = \mathrm{FL}(L_{i-1}, KL_i)$

$L_i = \mathrm{FL}(R_{i-1}, KL_{i+1}) \oplus \mathrm{FO}(R_i, KO_i, KI_i)$

$L_{i+1} = R_i \oplus \mathrm{FO}(L_i, KO_{i+1}, KI_{i+1})$

$R_{i+1} = L_i$

for i = 9 :

$R_i = \mathrm{FL}(L_{i-1}, KL_i)$

$L_i = \mathrm{FL}(R_{i-1}, KL_{i+1})$

(3) $C = L_9 \,||\, R_9$

4.2.2 MISTY1 decryption

The decryption operation is as shown in Figure 2, and is identical in operation to encryption apart from the following two modifications.

(1) All FL functions are replaced by their inverse functions FL^{-1}.

(2) The order in which the subkeys are applied is reversed.

4.2.3 MISTY1 functions

The MISTY1 algorithm uses a number of functions, namely S_7, S_9, FI, FO, FL and FL^{-1}, which are now defined.

4.2.3.1 Function FL

The FL function is used in encryption only and is shown in Figure 3. The FL function is defined as follows (X and Y are data, KL is a key):

(1) $X_{32} = X_L \,||\, X_R$, $KL_i = KL_{iL} \,||\, KL_{iR}$

(2) $Y_R = (X_L \wedge KL_{iL}) \oplus X_R$

(3) $Y_L = X_L \oplus (Y_R \vee KL_{iR})$

(4) $Y_{32} = Y_L \,||\, Y_R$

© ISO/IEC 2005 — All rights reserved
Copyright International Organization for Standardization
Reproduced by IHS under license with ISO
No reproduction or networking permitted without license from IHS
Not for Resale

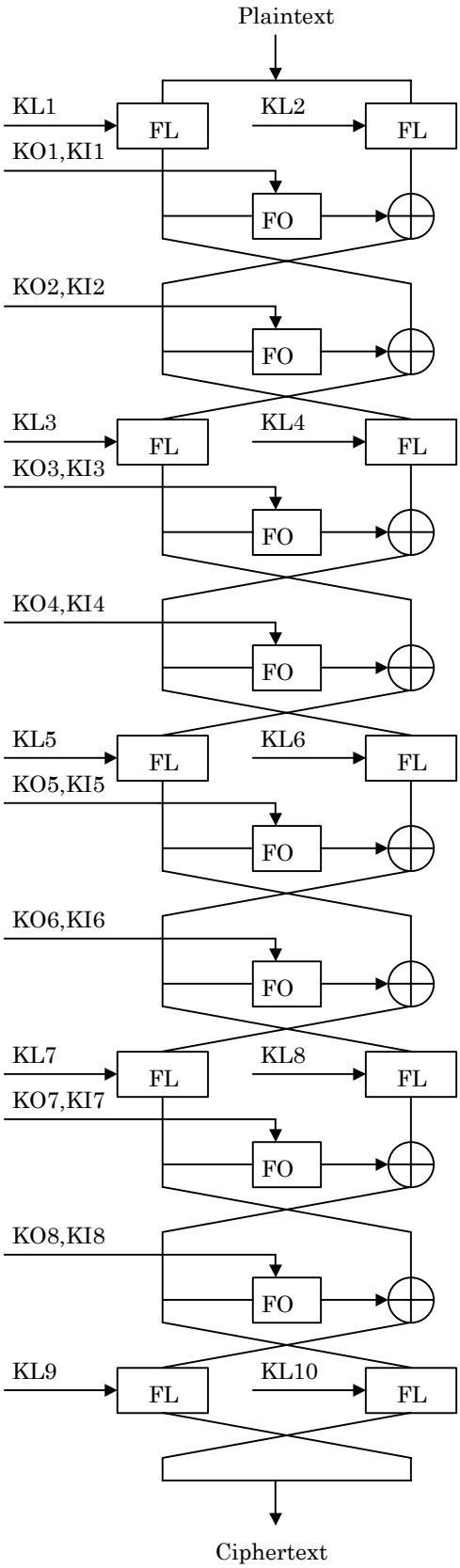

Figure 1. The Encryption Procedure

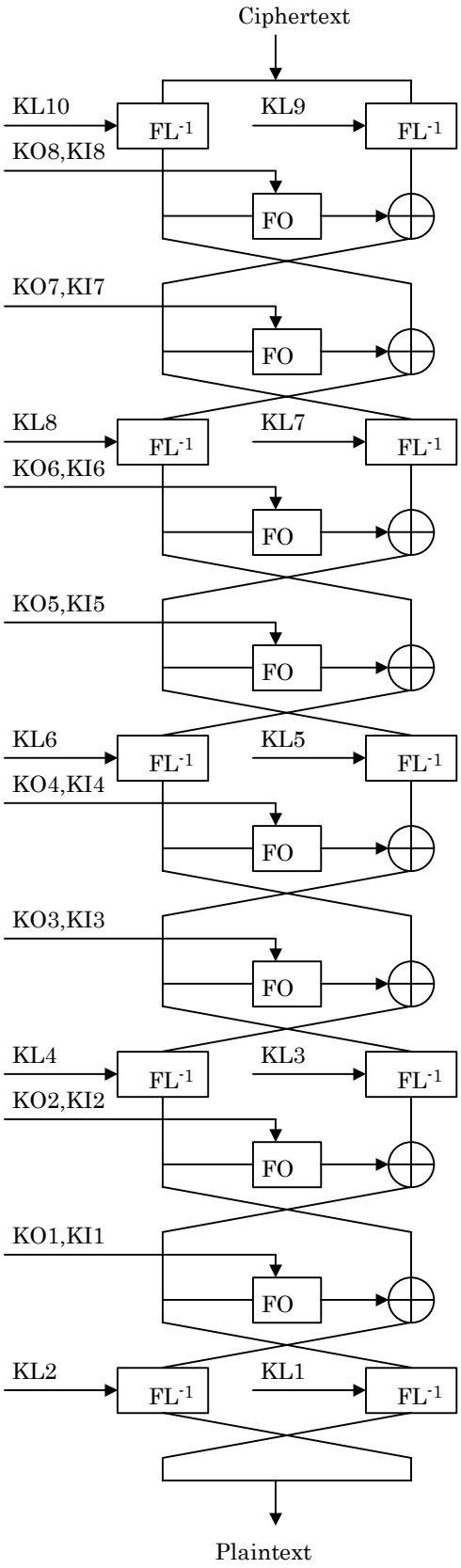

Figure 2. The Decryption Procedure

Copyright International Organization for Standardization · All rights reserved
Reproduced by IHS under license with ISO
No reproduction or networking permitted without license from IHS
Not for Resale

4.2.3.2 Function FL^{-1}

The FL^{-1} function, which is the inverse to the FL function, is used in decryption only and is shown in Figure 4. The FL^{-1} function is defined as follows (*X* and *Y* are data, *KL* is a key):

(1) $Y_{32} = Y_L \,||\, Y_R$, $KL_i = KL_{iL} \,||\, KL_{iR}$

(2) $X_L = Y_L \oplus (Y_R \vee KL_{iR})$

(3) $X_R = (X_L \wedge KL_{iL}) \oplus Y_R$

(4) $X_{32} = X_L \,||\, X_R$

4.2.3.3 Function FO

The FO function is used in encryption and decryption, and is shown in Figure 5. The FO function is defined as follows (*X* and *Y* are data, *KO* and *KI* are keys):

(1) $X_{32} = L_0 \,||\, R_0$

$KO_i = KO_{i1} \,||\, KO_{i2} \,||\, KO_{i3} \,||\, KO_{i4}$, $KI_i = KI_{i1} \,||\, KI_{i2} \,||\, KI_{i3}$

(2) for j = 1 to 3 :

$R_j = \mathrm{FI}(L_{j-1} \oplus KO_{ij}, KI_{ij}) \oplus R_{j-1}$

$L_j = R_{j-1}$

(3) $Y_{32} = (L_3 \oplus KO_{i4}) \,||\, R_3$

4.2.3.4 Function FI

The FI function is used for encryption, decryption and the key schedule, and is shown in Figure 6, where Extnd is the operation zero-extended from 7 bits to 9 bits by the concatenation of two bits on the left side, and Trunc is the operation truncated by two bits on the left side. The FI function is defined as follows (*X* and *Y* are data, *KI* is a key):

(1) $X_{16} = L_0$ (9 bits) $\,||\, R_0$ (7 bits), $KI_{ij} = KI_{ijL} \,||\, KI_{ijR}$

(2) $R_1 = S_9(L_0) \oplus \mathrm{Extnd}(R_0)$

(3) $L_1 = R_0$

(4) $R_2 = S_7(L_1) \oplus \mathrm{Trunc}(R_1) \oplus KI_{ijL}$

(5) $L_2 = R_1 \oplus KI_{ijR}$

(4) $R_3 = S_9(L_2) \oplus \mathrm{Extnd}(R_2)$

(5) $L_3 = R_2$

(6) $Y_{16} = L_3 \,||\, R_3$

--`,,```,,-`-`,,`,,`,`,,`---

© ISO/IEC 2005 — All rights reserved
Copyright International Organization for Standardization
Reproduced by IHS under license with ISO
No reproduction or networking permitted without license from IHS
Not for Resale

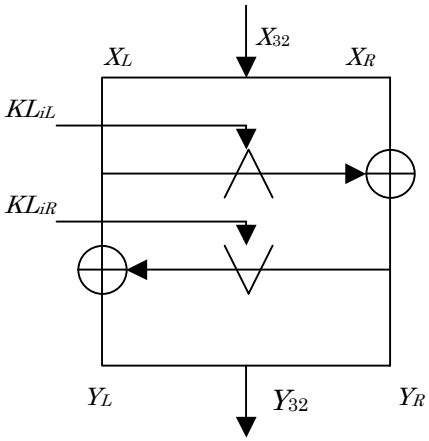

Figure 3. The Function FL

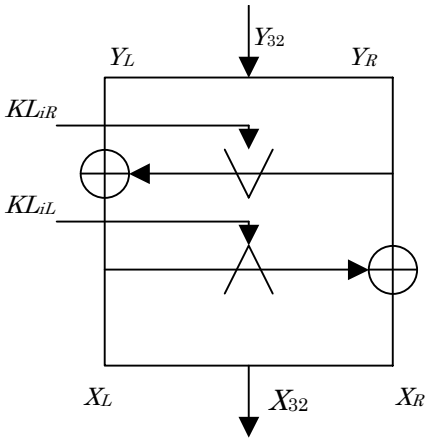

Figure 4. The Function FL^{-1}

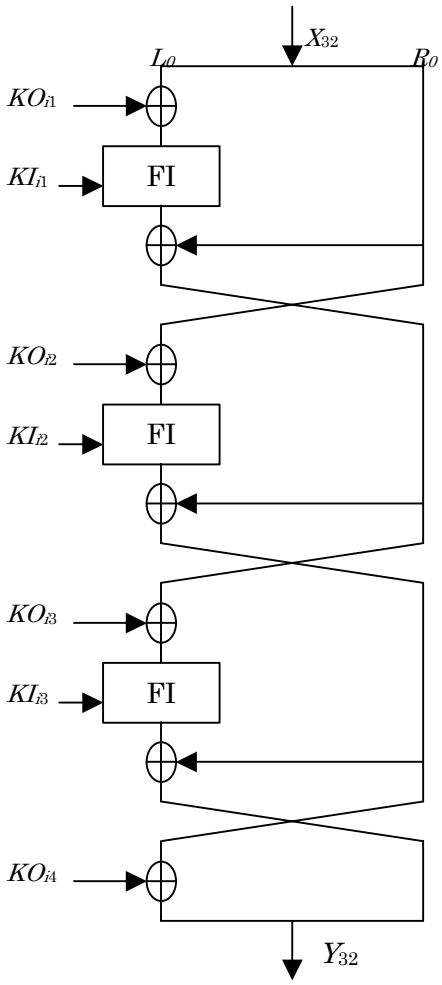

Figure 5. The Function FO

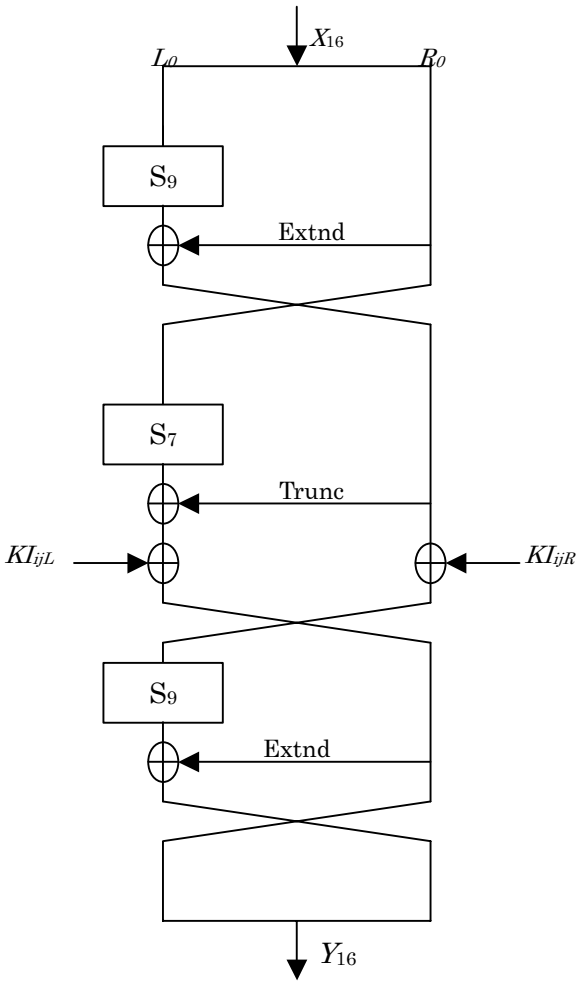

Figure 6. The Function FI

© ISO/IEC 2005 – All rights reserved
Copyright International Organization for Standardization
Reproduced by IHS under license with ISO
No reproduction or networking permitted without license from IHS
Not for Resale

4.2.3.5 Lookup Tables S_7 and S_9

S_7 is a bijective lookup table that accepts a 7-bit input and yields a 7-bit output. S_9 is a bijective lookup table that accepts a 9-bit input and yields a 9-bit output. Tables 2 and 3 define these lookup tables in a hexadecimal form. S_7 and S_9 can be also described in a simple algebraic form over GF(2) as shown in Clause C.1.

For example, if the input to S_7 is {53}, then the substitution value would be determined by the intersection of the row with index '5' and the column with index '3' in Table 2. This would result in S_7 having a value of {57}.

Table 2. S_7

	0	1	2	3	4	5	6	7	8	9	a	b	c	d	e	f
0	1b	32	33	5a	3b	10	17	54	5b	1a	72	73	6b	2c	66	49
1	1f	24	13	6c	37	2e	3f	4a	5d	0f	40	56	25	51	1c	04
2	0b	46	20	0d	7b	35	44	42	2b	1e	41	14	4b	79	15	6f
3	0e	55	09	36	74	0c	67	53	28	0a	7e	38	02	07	60	29
4	19	12	65	2f	30	39	08	68	5f	78	2a	4c	64	45	75	3d
5	59	48	03	57	7c	4f	62	3c	1d	21	5e	27	6a	70	4d	3a
6	01	6d	6e	63	18	77	23	05	26	76	00	31	2d	7a	7f	61
7	50	22	11	06	47	16	52	4e	71	3e	69	43	34	5c	58	7d

Table 3. S_9

	0	1	2	3	4	5	6	7	8	9	a	b	c	d	e	f
00	1c3	0cb	153	19f	1e3	0e9	0fb	035	181	0b9	117	1eb	133	009	02d	0d3
01	0c7	14a	037	07e	0eb	164	193	1d8	0a3	11e	055	02c	01d	1a2	163	118
02	14b	152	1d2	00f	02b	030	13a	0e5	111	138	18e	063	0e3	0c8	1f4	01b
03	001	09d	0f8	1a0	16d	1f3	01c	146	07d	0d1	082	1ea	183	12d	0f4	19e
04	1d3	0dd	1e2	128	1e0	0ec	059	091	011	12f	026	0dc	0b0	18c	10f	1f7
05	0e7	16c	0b6	0f9	0d8	151	101	14c	103	0b8	154	12b	1ae	017	071	00c
06	047	058	07f	1a4	134	129	084	15d	19d	1b2	1a3	048	07c	051	1ca	023
07	13d	1a7	165	03b	042	0da	192	0ce	0c1	06b	09f	1f1	12c	184	0fa	196
08	1e1	169	17d	031	180	10a	094	1da	186	13e	11c	060	175	1cf	067	119
09	065	068	099	150	008	007	17c	0b7	024	019	0de	127	0db	0e4	1a9	052
0a	109	090	19c	1c1	028	1b3	135	16a	176	0df	1e5	188	0c5	16e	1de	1b1
0b	0c3	1df	036	0ee	1ee	0f0	093	049	09a	1b6	069	081	125	00b	05e	0b4
0c	149	1c7	174	03e	13b	1b7	08e	1c6	0ae	010	095	1ef	04e	0f2	1fd	085
0d	0fd	0f6	0a0	16f	083	08a	156	09b	13c	107	167	098	1d0	1e9	003	1fe
0e	0bd	122	089	0d2	18f	012	033	06a	142	0ed	170	11b	0e2	14f	158	131
0f	147	05d	113	1cd	079	161	1a5	179	09e	1b4	0cc	022	132	01a	0e8	004
10	187	1ed	197	039	1bf	1d7	027	18b	0c6	09c	0d0	14e	06c	034	1f2	06e
11	0ca	025	0ba	191	0fe	013	106	02f	1ad	172	1db	0c0	10b	1d6	0f5	1ec
12	10d	076	114	1ab	075	10c	1e4	159	054	11f	04b	0c4	1be	0f7	029	0a4
13	00e	1f0	077	04d	17a	086	08b	0b3	171	0bf	10e	104	097	15b	160	168
14	0d7	0bb	066	1ce	0fc	092	1c5	06f	016	04a	0a1	139	0af	0f1	190	00a
15	1aa	143	17b	056	18d	166	0d4	1fb	14d	194	19a	087	1f8	123	0a7	1b8

© ISO/IEC 2005 — All rights reserved
Copyright International Organization for Standardization
Reproduced by IHS under license with ISO
No reproduction or networking permitted without license from IHS
Not for Resale

16	141	03c	1f9	140	02a	155	11a	1a1	198	0d5	126	1af	061	12e	157	1dc
17	072	18a	0aa	096	115	0ef	045	07b	08d	145	053	05f	178	0b2	02e	020
18	1d5	03f	1c9	1e7	1ac	044	038	014	0b1	16b	0ab	0b5	05a	182	1c8	1d4
19	018	177	064	0cf	06d	100	199	130	15a	005	120	1bb	1bd	0e0	04f	0d6
1a	13f	1c4	12a	015	006	0ff	19b	0a6	043	088	050	15f	1e8	121	073	17e
1b	0bc	0c2	0c9	173	189	1f5	074	1cc	1e6	1a8	195	01f	041	00d	1ba	032
1c	03d	1d1	080	0a8	057	1b9	162	148	0d9	105	062	07a	021	1ff	112	108
1d	1c0	0a9	11d	1b0	1a6	0cd	0f3	05c	102	05b	1d9	144	1f6	0ad	0a5	03a
1e	1cb	136	17f	046	0e1	01e	1dd	0e6	137	1fa	185	08c	08f	040	1b5	0be
1f	078	000	0ac	110	15e	124	002	1bc	0a2	0ea	070	1fc	116	15c	04c	1c2

4.2.4 MISTY1 key schedule

The key scheduling part accepts a 128-bit key K and yields another 128-bit subkey K', as shown below. The figure of the key scheduling part is described in Figure 7.

The key scheduling operation is thus defined as follows.

(1) $K = K_1 \,||\, K_2 \,||\, K_3 \,||\, K_4 \,||\, K_5 \,||\, K_6 \,||\, K_7 \,||\, K_8$

(2) for i = 1 to 7 :

$$K'_i = \mathrm{FI}(K_i, K_{i+1})$$

(3) $K'_8 = \mathrm{FI}(K_8, K_1)$

(4) $K' = K'_1 \,||\, K'_2 \,||\, K'_3 \,||\, K'_4 \,||\, K'_5 \,||\, K'_6 \,||\, K'_7 \,||\, K'_8$

(5) $KO_{i1} = K_i$, $KO_{i2} = K_{i+2}$, $KO_{i3} = K_{i+7}$, $KO_{i4} = K_{i+4}$, $KI_{i1} = K'_{i+5}$, $KI_{i2} = K'_{i+1}$, $KI_{i3} = K'_{i+3}$,

$KL_{iL} = K_{(i+1)/2}$ (odd i) or $K_{(i/2)+2}$ (even i), $KL_{iR} = K'_{(i+1)/2+6}$ (odd i) or $K'_{(i/2)+4}$ (even i)

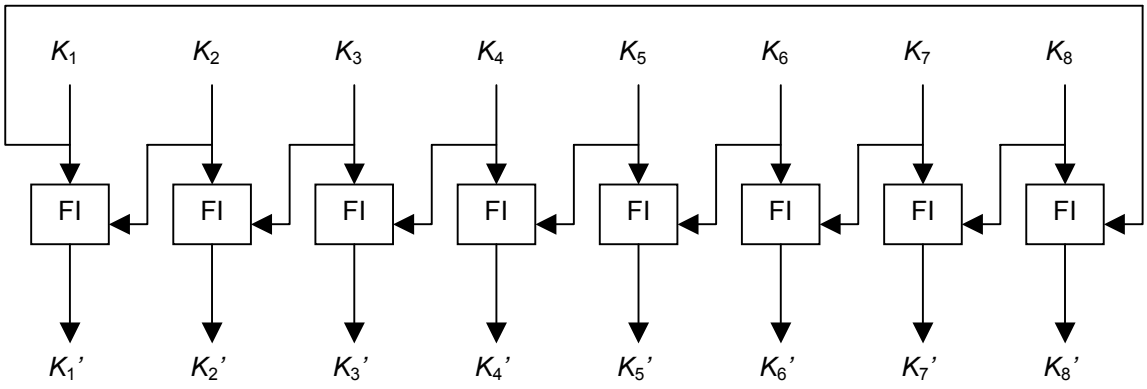

Figure 7. MISTY1 Key Scheduling

© ISO/IEC 2005 – All rights reserved
Copyright International Organization for Standardization
Reproduced by IHS under license with ISO
No reproduction or networking permitted without license from IHS
Not for Resale

4.3 CAST-128

The CAST-128 algorithm is a symmetric block cipher that can process data blocks of 64 bits, using a cipher key with length of 128 bits under 16 rounds.

4.3.1 CAST-128 encryption

The transformation of a 64-bit block P into a 64-bit block C is defined as follows (Km and Kr are keys):

(1) $P = L_0 \,||\, R_0$

(2) for i = 1 to 16:

$L_i = R_{i-1}$

$R_i = L_{i-1} \oplus f(R_{i-1}, Km_i, Kr_i)$

(3) $C = R_{16} \,||\, L_{16}$

4.3.2 CAST-128 decryption

The decryption operation is identical to the encryption operation given above, except that the rounds (and therefore the subkey pairs) are used in reverse order to compute (L_0, R_0) from (R_{16}, L_{16}).

4.3.3 CAST-128 functions

4.3.3.1 Pairs of Round Keys

CAST-128 uses a pair of subkeys per round: a 32-bit quantity Km is used as a "masking" key and a 5-bit quantity Kr is used as a "rotation" key.

4.3.3.2 f-functions

Three different round functions are used in the encryption and decryption operations, depending on the round number. The rounds are as follows (where "D" is the data input to the f function and "Ia" - "Id" are the most significant byte through least significant byte of I, respectively).

Type 1: $I = ((Km_i + D) <<<_1 Kr_i)$

$f = ((S1[Ia] \oplus S2[Ib]) - S3[Ic]) + S4[Id]$

Type 2: $I = ((Km_i \oplus D) <<<_1 Kr_i)$

$f = ((S1[Ia] - S2[Ib]) + S3[Ic]) \oplus S4[Id]$

Type 3: $I = ((Km_i - D) <<<_1 Kr_i)$

$f = ((S1[Ia] + S2[Ib]) \oplus S3[Ic]) - S4[Id]$

Rounds 1, 4, 7, 10, 13, and 16 use f function Type 1.

Rounds 2, 5, 8, 11, and 14 use f function Type 2.

© ISO/IEC 2005 — All rights reserved
Copyright International Organization for Standardization
Reproduced by IHS under license with ISO
No reproduction or networking permitted without license from IHS
Not for Resale

Rounds 3, 6, 9, 12, and 15 use f function Type 3.

4.3.3.3 Substitution Boxes

Eight substitution boxes are used: s-boxes S1, S2, S3, and S4 are round function s-boxes; S5, S6, S7, and S8 are key schedule s- boxes.

4.3.3.3.1 S-Box S1

```
30fb40d4 9fa0ff0b 6beccd2f 3f258c7a 1e213f2f 9c004dd3 6003e540 cf9fc949
bfd4af27 88bbbdb5 e2034090 98d09675 6e63a0e0 15c361d2 c2e7661d 22d4ff8e
28683b6f c07fd059 ff2379c8 775f50e2 43c340d3 df2f8656 887ca41a a2d2bd2d
a1c9e0d6 346c4819 61b76d87 22540f2f 2abe32e1 aa54166b 22568e3a a2d341d0
66db40c8 a784392f 004dff2f 2db9d2de 97943fac 4a97c1d8 527644b7 b5f437a7
b82cbaef d751d159 6ff7f0ed 5a097a1f 827b68d0 90ecf52e 22b0c054 bc8e5935
4b6d2f7f 50bb64a2 d2664910 bee5812d b7332290 e93b159f b48ee411 4bff345d
fd45c240 ad31973f c4f6d02e 55fc8165 d5b1caad a1ac2dae a2d4b76d c19b0c50
882240f2 0c6e4f38 a4e4bfd7 4f5ba272 564c1d2f c59c5319 b949e354 b04669fe
b1b6ab8a c71358dd 6385c545 110f935d 57538ad5 6a390493 e63d37e0 2a54f6b3
3a787d5f 6276a0b5 19a6fcdf 7a42206a 29f9d4d5 f61b1891 bb72275e aa508167
38901091 c6b505eb 84c7cb8c 2ad75a0f 874a1427 a2d1936b 2ad286af aa56d291
d7894360 425c750d 93b39e26 187184c9 6c00b32d 73e2bb14 a0bebc3c 54623779
64459eab 3f328b82 7718cf82 59a2cea6 04ee002e 89fe78e6 3fab0950 325ff6c2
81383f05 6963c5c8 76cb5ad6 d49974c9 ca180dcf 380782d5 c7fa5cf6 8ac31511
35e79e13 47da91d0 f40f9086 a7e2419e 31366241 051ef495 aa573b04 4a805d8d
548300d0 00322a3c bf64cddf ba57a68e 75c6372b 50afd341 a7c13275 915a0bf5
6b54bfab 2b0b1426 ab4cc9d7 449ccd82 f7fbf265 ab85c5f3 1b55db94 aad4e324
cfa4bd3f 2deaa3e2 9e204d02 c8bd25ac eadf55b3 d5bd9e98 e31231b2 2ad5ad6c
954329de adbe4528 d8710f69 aa51c90f aa786bf6 22513f1e aa51a79b 2ad344cc
7b5a41f0 d37cfbad 1b069505 41ece491 b4c332e6 032268d4 c9600acc ce387e6d
bf6bb16c 6a70fb78 0d03d9c9 d4df39de e01063da 4736f464 5ad328d8 b347cc96
75bb0fc3 98511bfb 4ffbcc35 b58bcf6a e11f0abc bfc5fe4a a70aec10 ac39570a
3f04442f 6188b153 e0397a2e 5727cb79 9ceb418f 1cacd68d 2ad37c96 0175cb9d
c69dff09 c75b65f0 d9db40d8 ec0e7779 4744ead4 b11c3274 dd24cb9e 7e1c54bd
f01144f9 d2240eb1 9675b3fd a3ac3755 d47c27af 51c85f4d 56907596 a5bb15e6
580304f0 ca042cf1 011a37ea 8dbfaadb 35ba3e4a 3526ffa0 c37b4d09 bc306ed9
98a52666 5648f725 ff5e569d 0ced63d0 7c63b2cf 700b45e1 d5ea50f1 85a92872
af1fbda7 d4234870 a7870bf3 2d3b4d79 42e04198 0cd0ede7 26470db8 f881814c
474d6ad7 7c0c5e5c d1231959 381b7298 f5d2f4db ab838653 6e2f1e23 83719c9e
bd91e046 9a56456e dc39200c 20c8c571 962bda1c e1e696ff b141ab08 7cca89b9
1a69e783 02cc4843 a2f7c579 429ef47d 427b169c 5ac9f049 dd8f0f00 5c8165bf
```

4.3.3.3.2 S-Box S2

```
1f201094 ef0ba75b 69e3cf7e 393f4380 fe61cf7a eec5207a 55889c94 72fc0651
ada7ef79 4e1d7235 d55a63ce de0436ba 99c430ef 5f0c0794 18dcdb7d a1d6eff3
```

© ISO/IEC 2005 – All rights reserved

Copyright International Organization for Standardization
Reproduced by IHS under license with ISO
No reproduction or networking permitted without license from IHS
Not for Resale

a0b52f7b 59e83605 ee15b094 e9ffd909 dc440086 ef944459 ba83ccb3 e0c3cdfb
d1da4181 3b092ab1 f997f1c1 a5e6cf7b 01420ddb e4e7ef5b 25a1ff41 e180f806
1fc41080 179bee7a d37ac6a9 fe5830a4 98de8b7f 77e83f4e 79929269 24fa9f7b
e113c85b acc40083 d7503525 f7ea615f 62143154 0d554b63 5d681121 c866c359
3d63cf73 cee234c0 d4d87e87 5c672b21 071f6181 39f7627f 361e3084 e4eb573b
602f64a4 d63acd9c 1bbc4635 9e81032d 2701f50c 99847ab4 a0e3df79 ba6cf38c
10843094 2537a95e f46f6ffe a1ff3b1f 208cfb6a 8f458c74 d9e0a227 4ec73a34
fc884f69 3e4de8df ef0e0088 3559648d 8a45388c 1d804366 721d9bfd a58684bb
e8256333 844e8212 128d8098 fed33fb4 ce280ae1 27e19ba5 d5a6c252 e49754bd
c5d655dd eb667064 77840b4d a1b6a801 84db26a9 e0b56714 21f043b7 e5d05860
54f03084 066ff472 a31aa153 dadc4755 b5625dbf 68561be6 83ca6b94 2d6ed23b
eccf01db a6d3d0ba b6803d5c af77a709 33b4a34c 397bc8d6 5ee22b95 5f0e5304
81ed6f61 20e74364 b45e1378 de18639b 881ca122 b96726d1 8049a7e8 22b7da7b
5e552d25 5272d237 79d2951c c60d894c 488cb402 1ba4fe5b a4b09f6b 1ca815cf
a20c3005 8871df63 b9de2fcb 0cc6c9e9 0beeff53 e3214517 b4542835 9f63293c
ee41e729 6e1d2d7c 50045286 1e6685f3 f33401c6 30a22c95 31a70850 60930f13
73f98417 a1269859 ec645c44 52c877a9 cdff33a6 a02b1741 7cbad9a2 2180036f
50d99c08 cb3f4861 c26bd765 64a3f6ab 80342676 25a75e7b e4e6d1fc 20c710e6
cdf0b680 17844d3b 31eef84d 7e0824e4 2ccb49eb 846a3bae 8ff77888 ee5d60f6
7af75673 2fdd5cdb a11631c1 30f66f43 b3faec54 157fd7fa ef8579cc d152de58
db2ffd5e 8f32ce19 306af97a 02f03ef8 99319ad5 c242fa0f a7e3ebb0 c68e4906
b8da230c 80823028 dcdef3c8 d35fb171 088a1bc8 bec0c560 61a3c9e8 bca8f54d
c72feffa 22822e99 82c570b4 d8d94e89 8b1c34bc 301e16e6 273be979 b0ffeaa6
61d9b8c6 00b24869 b7ffce3f 08dc283b 43daf65a f7e19798 7619b72f 8f1c9ba4
dc8637a0 16a7d3b1 9fc393b7 a7136eeb c6bcc63e 1a513742 ef6828bc 520365d6
2d6a77ab 3527ed4b 821fd216 095c6e2e db92f2fb 5eea29cb 145892f5 91584f7f
5483697b 2667a8cc 85196048 8c4bacea 833860d4 0d23e0f9 6c387e8a 0ae6d249
b284600c d835731d dcb1c647 ac4c56ea 3ebd81b3 230eabb0 6438bc87 f0b5b1fa
8f5ea2b3 fc184642 0a036b7a 4fb089bd 649da589 a345415e 5c038323 3e5d3bb9
43d79572 7e6dd07c 06dfdf1e 6c6cc4ef 7160a539 73bfbe70 83877605 4523ecf1

4.3.3.3.3 S-Box S3

8defc240 25fa5d9f eb903dbf e810c907 47607fff 369fe44b 8c1fc644 aececa90
beb1f9bf eefbcaea e8cf1950 51df07ae 920e8806 f0ad0548 e13c8d83 927010d5
11107d9f 07647db9 b2e3e4d4 3d4f285e b9afa820 fade82e0 a067268b 8272792e
553fb2c0 489ae22b d4ef9794 125e3fbc 21fffcee 825b1bfd 9255c5ed 1257a240
4e1a8302 bae07fff 528246e7 8e57140e 3373f7bf 8c9f8188 a6fc4ee8 c982b5a5
a8c01db7 579fc264 67094f31 f2bd3f5f 40fff7c1 1fb78dfc 8e6bd2c1 437be59b
99b03dbf b5dbc64b 638dc0e6 55819d99 a197c81c 4a012d6e c5884a28 ccc36f71
b843c213 6c0743f1 8309893c 0feddd5f 2f7fe850 d7c07f7e 02507fbf 5afb9a04
a747d2d0 1651192e af70bf3e 58c31380 5f98302e 727cc3c4 0a0fb402 0f7fef82
8c96fdad 5d2c2aae 8ee99a49 50da88b8 8427f4a0 1eac5790 796fb449 8252dc15
efbd7d9b a672597d ada840d8 45f54504 fa5d7403 e83ec305 4f91751a 925669c2
23efe941 a903f12e 60270df2 0276e4b6 94fd6574 927985b2 8276dbcb 02778176
f8af918d 4e48f79e 8f616ddf e29d840e 842f7d83 340ce5c8 96bbb682 93b4b148

© ISO/IEC 2005 — All rights reserved
Copyright International Organization for Standardization
Reproduced by IHS under license with ISO
No reproduction or networking permitted without license from IHS
Not for Resale

```
ef303cab 984faf28 779faf9b 92dc560d 224d1e20 8437aa88 7d29dc96 2756d3dc
8b907cee b51fd240 e7c07ce3 e566b4a1 c3e9615e 3cf8209d 6094d1e3 cd9ca341
5c76460e 00ea983b d4d67881 fd47572c f76cedd9 bda8229c 127dadaa 438a074e
1f97c090 081bdb8a 93a07ebe b938ca15 97b03cff 3dc2c0f8 8d1ab2ec 64380e51
68cc7bfb d90f2788 12490181 5de5ffd4 dd7ef86a 76a2e214 b9a40368 925d958f
4b39fffa ba39aee9 a4ffd30b faf7933b 6d498623 193cbcfa 27627545 825cf47a
61bd8ba0 d11e42d1 cead04f4 127ea392 10428db7 8272a972 9270c4a8 127de50b
285ba1c8 3c62f44f 35c0eaa5 e805d231 428929fb b4fcdf82 4fb66a53 0e7dc15b
1f081fab 108618ae fcfd086d f9ff2889 694bcc11 236a5cae 12deca4d 2c3f8cc5
d2d02dfe f8ef5896 e4cf52da 95155b67 494a488c b9b6a80c 5c8f82bc 89d36b45
3a609437 ec00c9a9 44715253 0a874b49 d773bc40 7c34671c 02717ef6 4feb5536
a2d02fff d2bf60c4 d43f03c0 50b4ef6d 07478cd1 006e1888 a2e53f55 b9e6d4bc
a2048016 97573833 d7207d67 de0f8f3d 72f87b33 abcc4f33 7688c55d 7b00a6b0
947b0001 570075d2 f9bb88f8 8942019e 4264a5ff 856302e0 72dbd92b ee971b69
6ea22fde 5f08ae2b af7a616d e5c98767 cf1febd2 61efc8c2 f1ac2571 cc8239c2
67214cb8 b1e583d1 b7dc3e62 7f10bdce f90a5c38 0ff0443d 606e6dc6 60543a49
5727c148 2be98a1d 8ab41738 20e1be24 af96da0f 68458425 99833be5 600d457d
282f9350 8334b362 d91d1120 2b6d8da0 642b1e31 9c305a00 52bce688 1b03588a
f7baefd5 4142ed9c a4315c11 83323ec5 dfef4636 a133c501 e9d3531c ee353783
```

4.3.3.3.4 S-Box S4

```
9db30420 1fb6e9de a7be7bef d273a298 4a4f7bdb 64ad8c57 85510443 fa020ed1
7e287aff e60fb663 095f35a1 79ebf120 fd059d43 6497b7b1 f3641f63 241e4adf
28147f5f 4fa2b8cd c9430040 0cc32220 fdd30b30 c0a5374f 1d2d00d9 24147b15
ee4d111a 0fca5167 71ff904c 2d195ffe 1a05645f 0c13fefe 081b08ca 05170121
80530100 e83e5efe ac9af4f8 7fe72701 d2b8ee5f 06df4261 bb9e9b8a 7293ea25
ce84ffdf f5718801 3dd64b04 a26f263b 7ed48400 547eebe6 446d4ca0 6cf3d6f5
2649abdf aea0c7f5 36338cc1 503f7e93 d3772061 11b638e1 72500e03 f80eb2bb
abe0502e ec8d77de 57971e81 e14f6746 c9335400 6920318f 081dbb99 ffc304a5
4d351805 7f3d5ce3 a6c866c6 5d5bcca9 daec6fea 9f926f91 9f46222f 3991467d
a5bf6d8e 1143c44f 43958302 d0214eeb 022083b8 3fb6180c 18f8931e 281658e6
26486e3e 8bd78a70 7477e4c1 b506e07c f32d0a25 79098b02 e4eabb81 28123b23
69dead38 1574ca16 df871b62 211c40b7 a51a9ef9 0014377b 041e8ac8 09114003
bd59e4d2 e3d156d5 4fe876d5 2f91a340 557be8de 00eae4a7 0ce5c2ec 4db4bba6
e756bdff dd3369ac ec17b035 06572327 99afc8b0 56c8c391 6b65811c 5e146119
6e85cb75 be07c002 c2325577 893ff4ec 5bbfc92d d0ec3b25 b7801ab7 8d6d3b24
20c763ef c366a5fc 9c382880 0ace3205 aac9548a eca1d7c7 041afa32 1d16625a
6701902c 9b757a54 31d477f7 9126b031 36cc6fdb c70b8b46 d9e66a48 56e55a79
026a4ceb 52437eff 2f8f76b4 0df980a5 8674cde3 edda04eb 17a9be04 2c18f4df
b7747f9d ab2af7b4 efc34d20 2e096b7c 1741a254 e5b6a035 213d42f6 2c1c7c26
61c2f50f 6552daf9 d2c231f8 25130f69 d8167fa2 0418f2c8 001a96a6 0d1526ab
63315c21 5e0a72ec 49bafefd 187908d9 8d0dbd86 311170a7 3e9b640c cc3e10d7
d5cad3b6 0caec388 f73001e1 6c728aff 71eae2a1 1f9af36e cfcbd12f c1de8417
```

--`,,``,,`-`-`,,`,,`,`,,`---

© ISO/IEC 2005 – All rights reserved

Copyright International Organization for Standardization
Reproduced by IHS under license with ISO
No reproduction or networking permitted without license from IHS
Not for Resale

ac07be6b cb44a1d8 8b9b0f56 013988c3 b1c52fca b4be31cd d8782806 12a3a4e2
6f7de532 58fd7eb6 d01ee900 24adffc2 f4990fc5 9711aac5 001d7b95 82e5e7d2
109873f6 00613096 c32d9521 ada121ff 29908415 7fbb977f af9eb3db 29c9ed2a
5ce2a465 a730f32c d0aa3fe8 8a5cc091 d49e2ce7 0ce454a9 d60acd86 015f1919
77079103 dea03af6 78a8565e dee356df 21f05cbe 8b75e387 b3c50651 b8a5c3ef
d8eeb6d2 e523be77 c2154529 2f69efdf afe67afb f470c4b2 f3e0eb5b d6cc9876
39e4460c 1fda8538 1987832f ca007367 a99144f8 296b299e 492fc295 9266beab
b5676e69 9bd3ddda df7e052f db25701c 1b5e51ee f65324e6 6afce36c 0316cc04
8644213e b7dc59d0 7965291f ccd6fd43 41823979 932bcdf6 b657c34d 4edfd282
7ae5290c 3cb9536b 851e20fe 9833557e 13ecf0b0 d3ffb372 3f85c5c1 0aef7ed2

4.3.3.3.5 S-Box S5

7ec90c04 2c6e74b9 9b0e66df a6337911 b86a7fff 1dd358f5 44dd9d44 1731167f
08fbf1fa e7f511cc d2051b00 735aba00 2ab722d8 386381cb acf6243a 69befd7a
e6a2e77f f0c720cd c4494816 ccf5c180 38851640 15b0a848 e68b18cb 4caadeff
5f480a01 0412b2aa 259814fc 41d0efe2 4e40b48d 248eb6fb 8dba1cfe 41a99b02
1a550a04 ba8f65cb 7251f4e7 95a51725 c106ecd7 97a5980a c539b9aa 4d79fe6a
f2f3f763 68af8040 ed0c9e56 11b4958b e1eb5a88 8709e6b0 d7e07156 4e29fea7
6366e52d 02d1c000 c4ac8e05 9377f571 0c05372a 578535f2 2261be02 d642a0c9
df13a280 74b55bd2 682199c0 d421e5ec 53fb3ce8 c8adedb3 28a87fc9 3d959981
5c1ff900 fe38d399 0c4eff0b 062407ea aa2f4fb1 4fb96976 90c79505 b0a8a774
ef55a1ff e59ca2c2 a6b62d27 e66a4263 df65001f 0ec50966 dfdd55bc 29de0655
911e739a 17af8975 32c7911c 89f89468 0d01e980 524755f4 03b63cc9 0cc844b2
bcf3f0aa 87ac36e9 e53a7426 01b3d82b 1a9e7449 64ee2d7e cddbb1da 01c94910
b868bf80 0d26f3fd 9342ede7 04a5c284 636737b6 50f5b616 f24766e3 8eca36c1
136e05db fef18391 fb887a37 d6e7f7d4 c7fb7dc9 3063fcdf b6f589de ec2941da
26e46695 b7566419 f654efc5 d08d58b7 48925401 c1bacb7f e5ff550f b6083049
5bb5d0e8 87d72e5a ab6a6ee1 223a66ce c62bf3cd 9e0885f9 68cb3e47 086c010f
a21de820 d18b69de f3f65777 fa02c3f6 407edac3 cbb3d550 1793084d b0d70eba
0ab378d5 d951fb0c ded7da56 4124bbe4 94ca0b56 0f5755d1 e0e1e56e 6184b5be
580a249f 94f74bc0 e327888e 9f7b5561 c3dc0280 05687715 646c6bd7 44904db3
66b4f0a3 c0f1648a 697ed5af 49e92ff6 309e374f 2cb6356a 85808573 4991f840
76f0ae02 083be84d 28421c9a 44489406 736e4cb8 c1092910 8bc95fc6 7d869cf4
134f616f 2e77118d b31b2be1 aa90b472 3ca5d717 7d161bba 9cad9010 af462ba2
9fe459d2 45d34559 d9f2da13 dbc65487 f3e4f94e 176d486f 097c13ea 631da5c7
445f7382 175683f4 cdc66a97 70be0288 b3cdcf72 6e5dd2f3 20936079 459b80a5
be60e2db a9c23101 eba5315c 224e42f2 1c5c1572 f6721b2c 1ad2fff3 8c25404e
324ed72f 4067b7fd 0523138e 5ca3bc78 dc0fd66e 75922283 784d6b17 58ebb16e
44094f85 3f481d87 fcfeae7b 77b5ff76 8c2302bf aaf47556 5f46b02a 2b092801
3d38f5f7 0ca81f36 52af4a8a 66d5e7c0 df3b0874 95055110 1b5ad7a8 f61ed5ad
6cf6e479 20758184 d0cefa65 88f7be58 4a046826 0ff6f8f3 a09c7f70 5346aba0
5ce96c28 e176eda3 6bac307f 376829d2 85360fa9 17e3fe2a 24b79767 f5a96b20
d6cd2595 68ff1ebf 7555442c f19f06be f9e0659a eeb9491d 34010718 bb30cab8
e822fe15 88570983 750e6249 da627e55 5e76ffa8 b1534546 6d47de08 efe9e7d4

© ISO/IEC 2005 — All rights reserved
Copyright International Organization for Standardization
Reproduced by IHS under license with ISO
No reproduction or networking permitted without license from IHS
Not for Resale

4.3.3.3.6 S-Box S6

```
f6fa8f9d 2cac6ce1 4ca34867 e2337f7c 95db08e7 016843b4 eced5cbc 325553ac
bf9f0960 dfa1e2ed 83f0579d 63ed86b9 1ab6a6b8 de5ebe39 f38ff732 8989b138
33f14961 c01937bd f506c6da e4625e7e a308ea99 4e23e33c 79cbd7cc 48a14367
a3149619 fec94bd5 a114174a eaa01866 a084db2d 09a8486f a888614a 2900af98
01665991 e1992863 c8f30c60 2e78ef3c d0d51932 cf0fec14 f7ca07d2 d0a82072
fd41197e 9305a6b0 e86be3da 74bed3cd 372da53c 4c7f4448 dab5d440 6dba0ec3
083919a7 9fbaeed9 49dbcfb0 4e670c53 5c3d9c01 64bdb941 2c0e636a ba7dd9cd
ea6f7388 e70bc762 35f29adb 5c4cdd8d f0d48d8c b88153e2 08a19866 1ae2eac8
284caf89 aa928223 9334be53 3b3a21bf 16434be3 9aea3906 efe8c36e f890cdd9
80226dae c340a4a3 df7e9c09 a694a807 5b7c5ecc 221db3a6 9a69a02f 68818a54
ceb2296f 53c0843a fe893655 25bfe68a b4628abc cf222ebf 25ac6f48 a9a99387
53bddb65 e76ffbe7 e967fd78 0ba93563 8e342bc1 e8a11be9 4980740d c8087dfc
8de4bf99 a11101a0 7fd37975 da5a26c0 e81f994f 9528cd89 fd339fed b87834bf
5f04456d 22258698 c9c4c83b 2dc156be 4f628daa 57f55ec5 e2220abe d2916ebf
4ec75b95 24f2c3c0 42d15d99 cd0d7fa0 7b6e27ff a8dc8af0 7345c106 f41e232f
35162386 e6ea8926 3333b094 157ec6f2 372b74af 692573e4 e9a9d848 f3160289
3a62ef1d a787e238 f3a5f676 74364853 20951063 4576698d b6fad407 592af950
36f73523 4cfb6e87 7da4cec0 6c152daa cb0396a8 c50dfe5d fcd707ab 0921c42f
89dff0bb 5fe2be78 448f4f33 754613c9 2b05d08d 48b9d585 dc049441 c8098f9b
7dede786 c39a3373 42410005 6a091751 0ef3c8a6 890072d6 28207682 a9a9f7be
bf32679d d45b5b75 b353fd00 cbb0e358 830f220a 1f8fb214 d372cf08 cc3c4a13
8cf63166 061c87be 88c98f88 6062e397 47cf8e7a b6c85283 3cc2acfb 3fc06976
4e8f0252 64d8314d da3870e3 1e665459 c10908f0 513021a5 6c5b68b7 822f8aa0
3007cd3e 74719eef dc872681 073340d4 7e432fd9 0c5ec241 8809286c f592d891
08a930f6 957ef305 b7fbffbd c266e96f 6fe4ac98 b173ecc0 bc60b42a 953498da
fba1ae12 2d4bd736 0f25faab a4f3fceb e2969123 257f0c3d 9348af49 361400bc
e8816f4a 3814f200 a3f94043 9c7a54c2 bc704f57 da41e7f9 c25ad33a 54f4a084
b17f5505 59357cbe edbd15c8 7f97c5ab ba5ac7b5 b6f6deaf 3a479c3a 5302da25
653d7e6a 54268d49 51a477ea 5017d55b d7d25d88 44136c76 0404a8c8 b8e5a121
b81a928a 60ed5869 97c55b96 eaec991b 29935913 01fdb7f1 088e8dfa 9ab6f6f5
3b4cbf9f 4a5de3ab e6051d35 a0e1d855 d36b4cf1 f544edeb b0e93524 bebb8fbd
a2d762cf 49c92f54 38b5f331 7128a454 48392905 a65b1db8 851c97bd d675cf2f
```

4.3.3.3.7 S-Box S7

```
85e04019 332bf567 662dbfff cfc65693 2a8d7f6f ab9bc912 de6008a1 2028da1f
0227bce7 4d642916 18fac300 50f18b82 2cb2cb11 b232e75c 4b3695f2 b28707de
a05fbcf6 cd4181e9 e150210c e24ef1bd b168c381 fde4e789 5c79b0d8 1e8bfd43
4d495001 38be4341 913cee1d 92a79c3f 089766be baeeadf4 1286becf b6eacb19
2660c200 7565bde4 64241f7a 8248dca9 c3b3ad66 28136086 0bd8dfa8 356d1cf2
107789be b3b2e9ce 0502aa8f 0bc0351e 166bf52a eb12ff82 e3486911 d34d7516
4e7b3aff 5f43671b 9cf6e037 4981ac83 334266ce 8c9341b7 d0d854c0 cb3a6c88
```

© ISO/IEC 2005 - All rights reserved

Copyright International Organization for Standardization
Reproduced by IHS under license with ISO
No reproduction or networking permitted without license from IHS
Not for Resale

47bc2829 4725ba37 a66ad22b 7ad61f1e 0c5cbafa 4437f107 b6e79962 42d2d816
0a961288 e1a5c06e 13749e67 72fc081a b1d139f7 f9583745 cf19df58 bec3f756
c06eba30 07211b24 45c28829 c95e317f bc8ec511 38bc46e9 c6e6fa14 bae8584a
ad4ebc46 468f508b 7829435f f124183b 821dba9f aff60ff4 ea2c4e6d 16e39264
92544a8b 009b4fc3 aba68ced 9ac96f78 06a5b79a b2856e6e 1aec3ca9 be838688
0e0804e9 55f1be56 e7e5363b b3a1f25d f7debb85 61fe033c 16746233 3c034c28
da6d0c74 79aac56c 3ce4e1ad 51f0c802 98f8f35a 1626a49f eed82b29 1d382fe3
0c4fb99a bb325778 3ec6d97b 6e77a6a9 cb658b5c d45230c7 2bd1408b 60c03eb7
b9068d78 a33754f4 f430c87d c8a71302 b96d8c32 ebd4e7be be8b9d2d 7979fb06
e7225308 8b75cf77 11ef8da4 e083c858 8d6b786f 5a6317a6 fa5cf7a0 5dda0033
f28ebfb0 f5b9c310 a0eac280 08b9767a a3d9d2b0 79d34217 021a718d 9ac6336a
2711fd60 438050e3 069908a8 3d7fedc4 826d2bef 4eeb8476 488dcf25 36c9d566
28e74e41 c2610aca 3d49a9cf bae3b9df b65f8de6 92aeaf64 3ac7d5e6 9ea80509
f22b017d a4173f70 dd1e16c3 15e0d7f9 50b1b887 2b9f4fd5 625aba82 6a017962
2ec01b9c 15488aa9 d716e740 40055a2c 93d29a22 e32dbf9a 058745b9 3453dc1e
d699296e 496cff6f 1c9f4986 dfe2ed07 b87242d1 19de7eae 053e561a 15ad6f8c
66626c1c 7154c24c ea082b2a 93eb2939 17dcb0f0 58d4f2ae 9ea294fb 52cf564c
9883fe66 2ec40581 763953c3 01d6692e d3a0c108 a1e7160e e4f2dfa6 693ed285
74904698 4c2b0edd 4f757656 5d393378 a132234f 3d321c5d c3f5e194 4b269301
c79f022f 3c997e7e 5e4f9504 3ffafbbd 76f7ad0e 296693f4 3d1fce6f c61e45be
d3b5ab34 f72bf9b7 1b0434c0 4e72b567 5592a33d b5229301 cfd2a87f 60aeb767
1814386b 30bcc33d 38a0c07d fd1606f2 c363519b 589dd390 5479f8e6 1cb8d647
97fd61a9 ea7759f4 2d57539d 569a58cf e84e63ad 462e1b78 6580f87e f3817914
91da55f4 40a230f3 d1988f35 b6e318d2 3ffa50bc 3d40f021 c3c0bdae 4958c24c
518f36b2 84b1d370 0fedce83 878ddada f2a279c7 94e01be8 90716f4b 954b8aa3

4.3.3.3.8 S-Box S8

e216300d bbddfffc a7ebdabd 35648095 7789f8b7 e6c1121b 0e241600 052ce8b5
11a9cfb0 e5952f11 ece7990a 9386d174 2a42931c 76e38111 b12def3a 37ddddfc
de9adeb1 0a0cc32c be197029 84a00940 bb243a0f b4d137cf b44e79f0 049eedfd
0b15a15d 480d3168 8bbbde5a 669ded42 c7ece831 3f8f95e7 72df191b 7580330d
94074251 5c7dcdfa abbe6d63 aa402164 b301d40a 02e7d1ca 53571dae 7a3182a2
12a8ddec fdaa335d 176f43e8 71fb46d4 38129022 ce949ad4 b84769ad 965bd862
82f3d055 66fb9767 15b80b4e 1d5b47a0 4cfde06f c28ec4b8 57e8726e 647a78fc
99865d44 608bd593 6c200e03 39dc5ff6 5d0b00a3 ae63aff2 7e8bd632 70108c0c
bbd35049 2998df04 980cf42a 9b6df491 9e7edd53 06918548 58cb7e07 3b74ef2e
522fffb1 d24708cc 1c7e27cd a4eb215b 3cf1d2e2 19b47a38 424f7618 35856039
9d17dee7 27eb35e6 c9aff67b 36baf5b8 09c467cd c18910b1 e11dbf7b 06cd1af8
7170c608 2d5e3354 d4de495a 64c6d006 bcc0c62c 3dd00db3 708f8f34 77d51b42
264f620f 24b8d2bf 15c1b79e 46a52564 f8d7e54e 3e378160 7895cda5 859c15a5
e6459788 c37bc75f db07ba0c 0676a3ab 7f229b1e 31842e7b 24259fd7 f8bef472
835ffcb8 6df4c1f2 96f5b195 fd0af0fc b0fe134c e2506d3d 4f9b12ea f215f225
a223736f 9fb4c428 25d04979 34c713f8 c4618187 ea7a6e98 7cd16efc 1436876c

© ISO/IEC 2005 — All rights reserved
Copyright International Organization for Standardization
Reproduced by IHS under license with ISO
No reproduction or networking permitted without license from IHS
Not for Resale

```
f1544107 bedeee14 56e9af27 a04aa441 3cf7c899 92ecbae6 dd67016d 151682eb
a842eedf fdba60b4 f1907b75 20e3030f 24d8c29e e139673b efa63fb8 71873054
b6f2cf3b 9f326442 cb15a4cc b01a4504 f1e47d8d 844a1be5 bae7dfdc 42cbda70
cd7dae0a 57e85b7a d53f5af6 20cf4d8c cea4d428 79d130a4 3486ebfb 33d3cddc
77853b53 37effcb5 c5068778 e580b3e6 4e68b8f4 c5c8b37e 0d809ea2 398feb7c
132a4f94 43b7950e 2fee7d1c 223613bd dd06caa2 37df932b c4248289 acf3ebc3
5715f6b7 ef3478dd f267616f c148cbe4 9052815e 5e410fab b48a2465 2eda7fa4
e87b40e4 e98ea084 5889e9e1 efd390fc dd07d35b db485694 38d7e5b2 57720101
730edebc 5b643113 94917e4f 503c2fba 646f1282 7523d24a e0779695 f9c17a8f
7a5b2121 d187b896 29263a4d ba510cdf 81f47c9f ad1163ed ea7b5965 1a00726e
11403092 00da6d77 4a0cdd61 ad1f4603 605bdfb0 9eedc364 22ebe6a8 cee7d28a
a0e736a0 5564a6b9 10853209 c7eb8f37 2de705ca 8951570f df09822b bd691a6c
aa12e4f2 87451c0f e0f6a27a 3ada4819 4cf1764f 0d771c2b 67cdb156 350d8384
5938fa0f 42399ef3 36997b07 0e84093d 4aa93e61 8360d87b 1fa98b0c 1149382c
e97625a5 0614d1b7 0e25244b 0c768347 589e8d82 0d2059d1 a466bb1e f8da0a82
04f19130 ba6e4ec0 99265164 1ee7230d 50b2ad80 eaee6801 8db2a283 ea8bf59e
```

4.3.4 CAST-128 key schedule

Let the 128-bit key be x0x1x2x3x4x5x6x7x8x9xAxBxCxDxExF, where x0 represents the most significant byte and xF represents the least significant byte, and z0..zF be intermediate (temporary) bytes.

The subkeys are formed from the key x0x1x2x3x4x5x6x7x8x9xAxBxCxDxExF as follows.

z0z1z2z3 = x0x1x2x3 ⊕ S5[xD] ⊕ S6[xF] ⊕ S7[xC] ⊕ S8[xE] ⊕ S7[x8]

z4z5z6z7 = x8x9xAxB ⊕ S5[z0] ⊕ S6[z2] ⊕ S7[z1] ⊕ S8[z3] ⊕ S8[xA]

z8z9zAzB = xCxDxExF ⊕ S5[z7] ⊕ S6[z6] ⊕ S7[z5] ⊕ S8[z4] ⊕ S5[x9]

zCzDzEzF = x4x5x6x7 ⊕ S5[zA] ⊕ S6[z9] ⊕ S7[zB] ⊕ S8[z8] ⊕ S6[xB]

K1 = S5[z8] ⊕ S6[z9] ⊕ S7[z7] ⊕ S8[z6] ⊕ S5[z2]

K2 = S5[zA] ⊕ S6[zB] ⊕ S7[z5] ⊕ S8[z4] ⊕ S6[z6]

K3 = S5[zC] ⊕ S6[zD] ⊕ S7[z3] ⊕ S8[z2] ⊕ S7[z9]

K4 = S5[zE] ⊕ S6[zF] ⊕ S7[z1] ⊕ S8[z0] ⊕ S8[zC]

x0x1x2x3 = z8z9zAzB ⊕ S5[z5] ⊕ S6[z7] ⊕ S7[z4] ⊕ S8[z6] ⊕ S7[z0]

x4x5x6x7 = z0z1z2z3 ⊕ S5[x0] ⊕ S6[x2] ⊕ S7[x1] ⊕ S8[x3] ⊕ S8[z2]

x8x9xAxB = z4z5z6z7 ⊕ S5[x7] ⊕ S6[x6] ⊕ S7[x5] ⊕ S8[x4] ⊕ S5[z1]

xCxDxExF = zCzDzEzF ⊕ S5[xA] ⊕ S6[x9] ⊕ S7[xB] ⊕ S8[x8] ⊕ S6[z3]

K5 = S5[x3] ⊕ S6[x2] ⊕ S7[xC] ⊕ S8[xD] ⊕ S5[x8]

K6 = S5[x1] ⊕ S6[x0] ⊕ S7[xE] ⊕ S8[xF] ⊕ S6[xD]

© ISO/IEC 2005 – All rights reserved
Copyright International Organization for Standardization
Reproduced by IHS under license with ISO
No reproduction or networking permitted without license from IHS
Not for Resale

K7 = S5[x7] ⊕ S6[x6] ⊕ S7[x8] ⊕ S8[x9] ⊕ S7[x3]

K8 = S5[x5] ⊕ S6[x4] ⊕ S7[xA] ⊕ S8[xB] ⊕ S8[x7]

z0z1z2z3 = x0x1x2x3 ⊕ S5[xD] ⊕ S6[xF] ⊕ S7[xC] ⊕ S8[xE] ⊕ S7[x8]

z4z5z6z7 = x8x9xAxB ⊕ S5[z0] ⊕ S6[z2] ⊕ S7[z1] ⊕ S8[z3] ⊕ S8[xA]

z8z9zAzB = xCxDxExF ⊕ S5[z7] ⊕ S6[z6] ⊕ S7[z5] ⊕ S8[z4] ⊕ S5[x9]

zCzDzEzF = x4x5x6x7 ⊕ S5[zA] ⊕ S6[z9] ⊕ S7[zB] ⊕ S8[z8] ⊕ S6[xB]

K9 = S5[z3] ⊕ S6[z2] ⊕ S7[zC] ⊕ S8[zD] ⊕ S5[z9]

K10 = S5[z1] ⊕ S6[z0] ⊕ S7[zE] ⊕ S8[zF] ⊕ S6[zC]

K11 = S5[z7] ⊕ S6[z6] ⊕ S7[z8] ⊕ S8[z9] ⊕ S7[z2]

K12 = S5[z5] ⊕ S6[z4] ⊕ S7[zA] ⊕ S8[zB] ⊕ S8[z6]

x0x1x2x3 = z8z9zAzB ⊕ S5[z5] ⊕ S6[z7] ⊕ S7[z4] ⊕ S8[z6] ⊕ S7[z0]

x4x5x6x7 = z0z1z2z3 ⊕ S5[x0] ⊕ S6[x2] ⊕ S7[x1] ⊕ S8[x3] ⊕ S8[z2]

x8x9xAxB = z4z5z6z7 ⊕ S5[x7] ⊕ S6[x6] ⊕ S7[x5] ⊕ S8[x4] ⊕ S5[z1]

xCxDxExF = zCzDzEzF ⊕ S5[xA] ⊕ S6[x9] ⊕ S7[xB] ⊕ S8[x8] ⊕ S6[z3]

K13 = S5[x8] ⊕ S6[x9] ⊕ S7[x7] ⊕ S8[x6] ⊕ S5[x3]

K14 = S5[xA] ⊕ S6[xB] ⊕ S7[x5] ⊕ S8[x4] ⊕ S6[x7]

K15 = S5[xC] ⊕ S6[xD] ⊕ S7[x3] ⊕ S8[x2] ⊕ S7[x8]

K16 = S5[xE] ⊕ S6[xF] ⊕ S7[x1] ⊕ S8[x0] ⊕ S8[xD]

[The remaining half is identical to what is given above, carrying on from the last created x0..xF to generate keys K17 - K32.]

z0z1z2z3 = x0x1x2x3 ⊕ S5[xD] ⊕ S6[xF] ⊕ S7[xC] ⊕ S8[xE] ⊕ S7[x8]

z4z5z6z7 = x8x9xAxB ⊕ S5[z0] ⊕ S6[z2] ⊕ S7[z1] ⊕ S8[z3] ⊕ S8[xA]

z8z9zAzB = xCxDxExF ⊕ S5[z7] ⊕ S6[z6] ⊕ S7[z5] ⊕ S8[z4] ⊕ S5[x9]

zCzDzEzF = x4x5x6x7 ⊕ S5[zA] ⊕ S6[z9] ⊕ S7[zB] ⊕ S8[z8] ⊕ S6[xB]

K17 = S5[z8] ⊕ S6[z9] ⊕ S7[z7] ⊕ S8[z6] ⊕ S5[z2]

K18 = S5[zA] ⊕ S6[zB] ⊕ S7[z5] ⊕ S8[z4] ⊕ S6[z6]

K19 = S5[zC] ⊕ S6[zD] ⊕ S7[z3] ⊕ S8[z2] ⊕ S7[z9]

K20 = S5[zE] ⊕ S6[zF] ⊕ S7[z1] ⊕ S8[z0] ⊕ S8[zC]

x0x1x2x3 = z8z9zAzB ⊕ S5[z5] ⊕ S6[z7] ⊕ S7[z4] ⊕ S8[z6] ⊕ S7[z0]

© ISO/IEC 2005 — All rights reserved
Copyright International Organization for Standardization
Reproduced by IHS under license with ISO
No reproduction or networking permitted without license from IHS
Not for Resale

x4x5x6x7 = z0z1z2z3 ⊕ S5[x0] ⊕ S6[x2] ⊕ S7[x1] ⊕ S8[x3] ⊕ S8[z2]

x8x9xAxB = z4z5z6z7 ⊕ S5[x7] ⊕ S6[x6] ⊕ S7[x5] ⊕ S8[x4] ⊕ S5[z1]

xCxDxExF = zCzDzEzF ⊕ S5[xA] ⊕ S6[x9] ⊕ S7[xB] ⊕ S8[x8] ⊕ S6[z3]

K21 = S5[x3] ⊕ S6[x2] ⊕ S7[xC] ⊕ S8[xD] ⊕ S5[x8]

K22 = S5[x1] ⊕ S6[x0] ⊕ S7[xE] ⊕ S8[xF] ⊕ S6[xD]

K23 = S5[x7] ⊕ S6[x6] ⊕ S7[x8] ⊕ S8[x9] ⊕ S7[x3]

K24 = S5[x5] ⊕ S6[x4] ⊕ S7[xA] ⊕ S8[xB] ⊕ S8[x7]

z0z1z2z3 = x0x1x2x3 ⊕ S5[xD] ⊕ S6[xF] ⊕ S7[xC] ⊕ S8[xE] ⊕ S7[x8]

z4z5z6z7 = x8x9xAxB ⊕ S5[z0] ⊕ S6[z2] ⊕ S7[z1] ⊕ S8[z3] ⊕ S8[xA]

z8z9zAzB = xCxDxExF ⊕ S5[z7] ⊕ S6[z6] ⊕ S7[z5] ⊕ S8[z4] ⊕ S5[x9]

zCzDzEzF = x4x5x6x7 ⊕ S5[zA] ⊕ S6[z9] ⊕ S7[zB] ⊕ S8[z8] ⊕ S6[xB]

K25 = S5[z3] ⊕ S6[z2] ⊕ S7[zC] ⊕ S8[zD] ⊕ S5[z9]

K26 = S5[z1] ⊕ S6[z0] ⊕ S7[zE] ⊕ S8[zF] ⊕ S6[zC]

K27 = S5[z7] ⊕ S6[z6] ⊕ S7[z8] ⊕ S8[z9] ⊕ S7[z2]

K28 = S5[z5] ⊕ S6[z4] ⊕ S7[zA] ⊕ S8[zB] ⊕ S8[z6]

x0x1x2x3 = z8z9zAzB ⊕ S5[z5] ⊕ S6[z7] ⊕ S7[z4] ⊕ S8[z6] ⊕ S7[z0]

x4x5x6x7 = z0z1z2z3 ⊕ S5[x0] ⊕ S6[x2] ⊕ S7[x1] ⊕ S8[x3] ⊕ S8[z2]

x8x9xAxB = z4z5z6z7 ⊕ S5[x7] ⊕ S6[x6] ⊕ S7[x5] ⊕ S8[x4] ⊕ S5[z1]

xCxDxExF = zCzDzEzF ⊕ S5[xA] ⊕ S6[x9] ⊕ S7[xB] ⊕ S8[x8] ⊕ S6[z3]

K29 = S5[x8] ⊕ S6[x9] ⊕ S7[x7] ⊕ S8[x6] ⊕ S5[x3]

K30 = S5[xA] ⊕ S6[xB] ⊕ S7[x5] ⊕ S8[x4] ⊕ S6[x7]

K31 = S5[xC] ⊕ S6[xD] ⊕ S7[x3] ⊕ S8[x2] ⊕ S7[x8]

K32 = S5[xE] ⊕ S6[xF] ⊕ S7[x1] ⊕ S8[x0] ⊕ S8[xD]

The following step is used to create masking subkeys and rotation subkeys.

Let Km_1, …, Km_{16} be 32-bit masking subkeys (one per round).

Let Kr_1, …, Kr_{16} be 32-bit rotation subkeys (one per round); only the least significant 5 bits are used in each round.

for i = 1 to 16:

$Km_i = K_i$

$Kr_i = K_{16+i}$

© ISO/IEC 2005 – All rights reserved

Copyright International Organization for Standardization
Reproduced by IHS under license with ISO
No reproduction or networking permitted without license from IHS
Not for Resale

5 128-bit block ciphers

In this clause, three 128-bit block ciphers are specified; AES in clause 5.1, Camellia in clause 5.2 and SEED in clause 5.3.

5.1 AES

The AES algorithm is a symmetric block cipher that can process data blocks of 128 bits, using cipher keys with lengths of 128, 192 and 256 bits. The AES algorithm is also known as the Rijndael algorithm. The AES algorithm may be used with the three different key lengths indicated above, and therefore these different options are referred to as “AES-128”, “AES-192” and “AES-256”.

In the AES algorithm, the length of the input and output block is 128 bits (4 words). The length of the cipher key *K* is 128, 192 or 256 bits. The number of rounds, ***Nr***, is 10, 12 or 14, depending on the key length, described in Table 4.

Table 4. Number of rounds in AES

	Number of rounds (***Nr***)
AES-128	10
AES-192	12
AES-256	14

For both encryption and decryption, the AES algorithm uses a round function that is composed of four different byte-oriented transformations: 1) byte substitution using a substitution table (S-box), 2) shifting rows of the *state* array by different offsets, 3) mixing the data within each column of the *state* array, and 4) adding a round key to the *state*. These transformations (and their inverses) are described in Clause 5.1.3.

The encryption and decryption operations are described in Clauses 5.1.1 and 5.1.2, respectively, while the key schedule is described in Clause 5.1.4.

5.1.1 AES encryption

The AES algorithm consists of a sequence of operations performed on a two-dimensional array of bytes called the *state*. The *state* consists of four rows of bytes, each containing 4 bytes. In the *state* array denoted by the symbol *s*, each individual byte has two indices, with its row number r in the range $0 \le r < 4$ and its column number c in the range $0 \le c < 4$. The *state* is denoted by $S = (s_{r,c})$.

At the start of encryption process, the 16 bytes of the *state* are initialised with plaintext bytes p_i, from top to bottom and from left to right as illustrated in Figure 8.

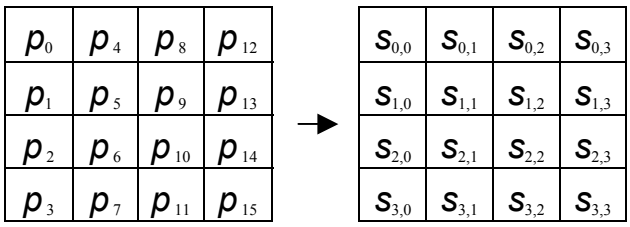

Figure 8. Initialisation of the *state*

After an initial round key addition, the state is transformed by implementing a round function ***Nr*** times, with the final round differing slightly from the first ***Nr*** -1 rounds. The final contents of the state are then sent to the output as ciphertext.

© ISO/IEC 2005 — All rights reserved
Copyright International Organization for Standardization
Reproduced by IHS under license with ISO
No reproduction or networking permitted without license from IHS
Not for Resale

The complete encryption operation can be described as follows:

(1) S = `AddRoundKey`(P, W_0)

(2) for i = 1 to ***Nr*** –1:

S = `SubBytes`(S)

S = `ShiftRows`(S)

S = `MixColumns`(S)

S = `AddRoundKey`(S, W_i)

(3) S = `SubBytes`(S), S = `ShiftRows`(S)

(4) C = `AddRoundKey`(S, W_{Nr})

The individual transformations - `SubBytes()`, `ShiftRows()`, `MixColumns()` and `AddRoundKey()` – process the *state* and are described in Clause 5.1.3. All ***Nr*** rounds are identical with the exception of the final round, which does not include the `MixColumns()` transformation. In the above operation, the array W_i contains the round keys described in Clause 5.1.4.

5.1.2 AES decryption

All transformations used in the encryption operations are invertible. An implementation of the decryption operation that maintains the sequence of transformations used in the encryption operation, replacing the transformations with their inverses, follows.

The complete decryption operation can be described as follows:

(1) S = `AddRoundKey`(C, W'_{Nr})

(2) for i = ***Nr*** –1 down to 1:

S = $\texttt{SubBytes}^{-1}(S)$

S = $\texttt{ShiftRows}^{-1}(S)$

S = $\texttt{MixColumns}^{-1}(S)$

S = `AddRoundKey`(S, W'_i)

(3) S = $\texttt{SubBytes}^{-1}(S)$, S = $\texttt{ShiftRows}^{-1}(S)$

(4) P = `AddRoundKey`(S, W'_0)

The individual transformations – $\texttt{SubBytes}^{-1}()$, $\texttt{ShiftRows}^{-1}()$ and $\texttt{MixColumns}^{-1}()$ – process the *state* and are described in Clause 5.1.3. All ***Nr*** rounds are identical with the exception of the final round, which does not include the $\texttt{MixColumns}^{-1}()$ transformation.

The new round keys W'_i used in the above equation are computed from the original round keys described in Clause 5.1.4.

5.1.3 AES transformations

The AES algorithm uses a number of transformations, namely `SubBytes()`, $\texttt{SubBytes}^{-1}()$, `ShiftRows()`, $\texttt{ShiftRows}^{-1}()$, `MixColumns()`, $\texttt{MixColumns}^{-1}()$ and `AddRoundKey()`, which are now defined.

© ISO/IEC 2005 – All rights reserved

Copyright International Organization for Standardization
Reproduced by IHS under license with ISO
No reproduction or networking permitted without license from IHS
Not for Resale

5.1.3.1 `SubBytes()` transformation

The `SubBytes()` transformation substitutes each individual *state* byte $s_{i,j}$ by a new value $s'_{i,j}$ using a substitution table (S-box), which is invertible.

Figure 9 illustrates the effect of the `SubBytes()` transformation on the *state*.

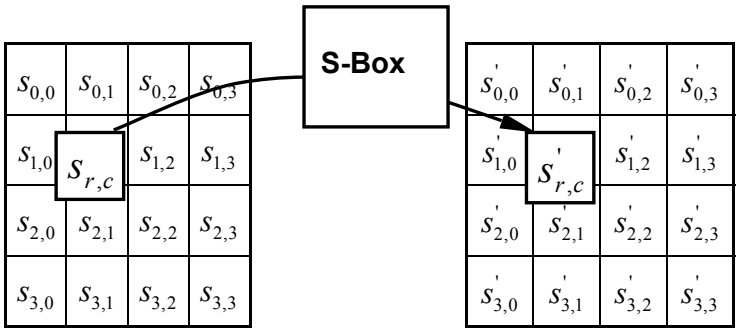

Figure 9. `SubBytes()` applies the S-box to each byte of the State

The S-box used in the `SubBytes()` transformation is presented in hexadecimal form in Table 5.

Table 5. AES S-box

	0	1	2	3	4	5	6	7	8	9	a	b	c	d	e	f
0	63	7c	77	7b	f2	6b	6f	c5	30	01	67	2b	fe	d7	ab	76
1	ca	82	c9	7d	fa	59	47	f0	ad	d4	a2	af	9c	a4	72	c0
2	b7	fd	93	26	36	3f	f7	cc	34	a5	e5	f1	71	d8	31	15
3	04	c7	23	c3	18	96	05	9a	07	12	80	e2	eb	27	b2	75
4	09	83	2c	1a	1b	6e	5a	a0	52	3b	d6	b3	29	e3	2f	84
5	53	d1	00	ed	20	fc	b1	5b	6a	cb	be	39	4a	4c	58	cf
6	d0	ef	aa	fb	43	4d	33	85	45	f9	02	7f	50	3c	9f	a8
7	51	a3	40	8f	92	9d	38	f5	bc	b6	da	21	10	ff	f3	d2
8	cd	0c	13	ec	5f	97	44	17	c4	a7	7e	3d	64	5d	19	73
9	60	81	4f	dc	22	2a	90	88	46	ee	b8	14	de	5e	0b	db
a	e0	32	3a	0a	49	06	24	5c	c2	d3	ac	62	91	95	e4	79
b	e7	c8	37	6d	8d	d5	4e	a9	6c	56	f4	ea	65	7a	ae	08
c	ba	78	25	2e	1c	a6	b4	c6	e8	dd	74	1f	4b	bd	8b	8a
d	70	3e	b5	66	48	03	f6	0e	61	35	57	b9	86	c1	1d	9e
e	e1	f8	98	11	69	d9	8e	94	9b	1e	87	e9	ce	55	28	df
f	8c	a1	89	0d	bf	e6	42	68	41	99	2d	0f	b0	54	bb	16

For example, if $s_{1,1}$ = {`53`}, then the substitution value would be determined by the intersection of the row with index '5' and the column with index '3' in Table 5. This would result in $s'_{1,1}$having a value of {`ed`}.

5.1.3.2 `SubBytes`$^{-1}$`()` transformation

`SubBytes`$^{-1}$`()` is the inverse of the `SubBytes()` transformation, in which the inverse S-box is applied to each byte of the *state*. This is obtained by applying the inverse of the transformation described in Clause 5.1.3.1.

--`,,``,,`-`-`,,`,,`,`,,`---
© ISO/IEC 2005 — All rights reserved
Copyright International Organization for Standardization
Reproduced by IHS under license with ISO
No reproduction or networking permitted without license from IHS
Not for Resale

The inverse S-box used in the SubBytes^{-1}() transformation is presented in Table 6.

Table 6. AES Inverse S-box

	0	1	2	3	4	5	6	7	8	9	a	b	c	d	e	f
0	52	09	6a	d5	30	36	a5	38	bf	40	a3	9e	81	f3	d7	fb
1	7c	e3	39	82	9b	2f	ff	87	34	8e	43	44	c4	de	e9	cb
2	54	7b	94	32	a6	c2	23	3d	ee	4c	95	0b	42	fa	c3	4e
3	08	2e	a1	66	28	d9	24	b2	76	5b	a2	49	6d	8b	d1	25
4	72	f8	f6	64	86	68	98	16	d4	a4	5c	cc	5d	65	b6	92
5	6c	70	48	50	fd	ed	b9	da	5e	15	46	57	a7	8d	9d	84
6	90	d8	ab	00	8c	bc	d3	0a	f7	e4	58	05	b8	b3	45	06
7	d0	2c	1e	8f	ca	3f	0f	02	c1	af	bd	03	01	13	8a	6b
8	3a	91	11	41	4f	67	dc	ea	97	f2	cf	ce	f0	b4	e6	73
9	96	ac	74	22	e7	ad	35	85	e2	f9	37	e8	1c	75	df	6e
a	47	f1	1a	71	1d	29	c5	89	6f	b7	62	0e	aa	18	be	1b
b	fc	56	3e	4b	c6	d2	79	20	9a	db	c0	fe	78	cd	5a	f4
c	1f	dd	a8	33	88	07	c7	31	b1	12	10	59	27	80	ec	5f
d	60	51	7f	a9	19	b5	4a	0d	2d	e5	7a	9f	93	c9	9c	ef
e	a0	e0	3b	4d	ae	2a	f5	b0	c8	eb	bb	3c	83	53	99	61
f	17	2b	04	7e	ba	77	d6	26	e1	69	14	63	55	21	0c	7d

5.1.3.3 ShiftRows() transformation

In the ShiftRows() transformation, the bytes in the last three rows of the State are cyclically shifted over different numbers of bytes (offsets). The first row, Row 0, is not shifted.

Specifically, the ShiftRows() transformation proceeds as follows:

$$S'_{r,c} = S_{r,(c+r) \bmod 4} \text{ for } 0 < r < 4 \text{ and } 0 \le c < 4,$$

where r is the row number.

This has the effect of moving bytes to the left (i.e., lower values of c in a given row), while the leftmost bytes wrap around to the rightmost positions of the row (i.e., higher values of c in a given row).

Figure 10 illustrates the ShiftRows() transformation.

5.1.3.4 ShiftRows^{-1}() transformation

ShiftRows^{-1}() is the inverse of the ShiftRows() transformation. The bytes in the last three rows of the State are cyclically shifted over different numbers of bytes (offsets). The first row, Row 0, is not shifted. The bottom three rows are cyclically shifted by 4 – r bytes, where r is the row number.

Specifically, the ShiftRows^{-1}() transformation proceeds as follows:

$$S'_{r,(c+r) \bmod 4} = S_{r,c} \text{ for } 0 < r < 4 \text{ and } 0 \le c < 4$$

Figure 11 illustrates the ShiftRows^{-1}() transformation.

© ISO/IEC 2005 – All rights reserved
Copyright International Organization for Standardization
Reproduced by IHS under license with ISO
No reproduction or networking permitted without license from IHS
Not for Resale

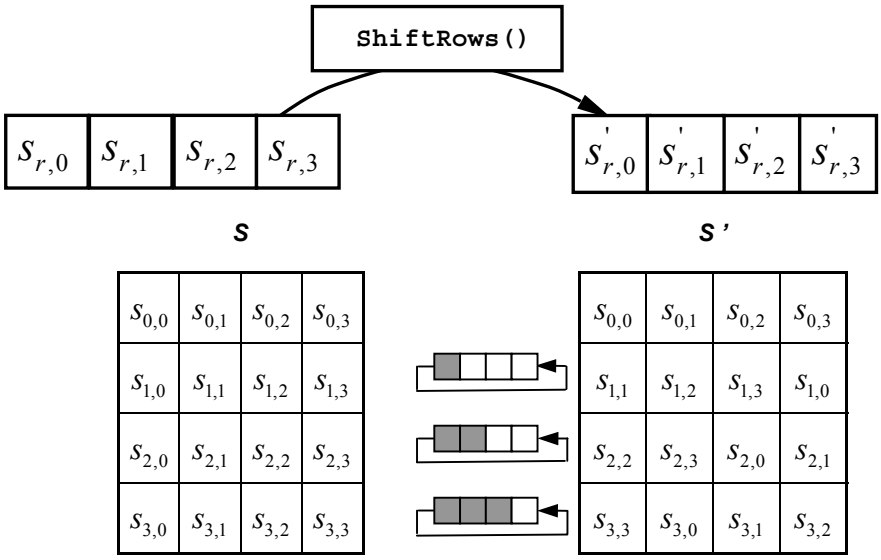

Figure 10. `ShiftRows()` cyclically shifts the last three rows in the State

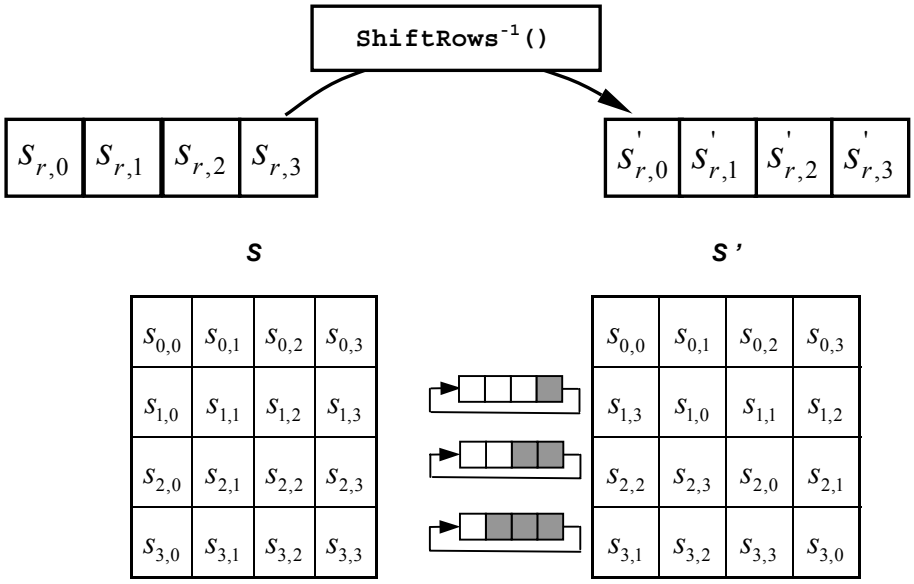

Figure 11. `ShiftRows`$^{-1}$`()` cyclically shifts the last three rows in the State

5.1.3.5 `MixColumns()` transformation

The `MixColumns()` transformation operates on the *state* column-by-column. This transformation can be represented as a matrix multiplication, where each byte is interpreted as an element in the finite field GF(2^8) :

$$s'(x) = a(x) \otimes s(x): \qquad \begin{bmatrix} s'_{0,c} \\ s'_{1,c} \\ s'_{2,c} \\ s'_{3,c} \end{bmatrix} = \begin{bmatrix} 02 & 03 & 01 & 01 \\ 01 & 02 & 03 & 01 \\ 01 & 01 & 02 & 03 \\ 03 & 01 & 01 & 02 \end{bmatrix} \begin{bmatrix} s_{0,c} \\ s_{1,c} \\ s_{2,c} \\ s_{3,c} \end{bmatrix} \qquad \text{for } 0 \le c < 4.$$

© ISO/IEC 2005 — All rights reserved
Copyright International Organization for Standardization
Reproduced by IHS under license with ISO
No reproduction or networking permitted without license from IHS
Not for Resale

As a result of this multiplication, the four bytes in a column are replaced by the following:

$$s'_{0,c} = (\{02\} \bullet s_{0,c}) \oplus (\{03\} \bullet s_{1,c}) \oplus s_{2,c} \oplus s_{3,c}$$
$$s'_{1,c} = s_{0,c} \oplus (\{02\} \bullet s_{1,c}) \oplus (\{03\} \bullet s_{2,c}) \oplus s_{3,c}$$
$$s'_{2,c} = s_{0,c} \oplus s_{1,c} \oplus (\{02\} \bullet s_{2,c}) \oplus (\{03\} \bullet s_{3,c})$$
$$s'_{3,c} = (\{03\} \bullet s_{0,c}) \oplus s_{1,c} \oplus s_{2,c} \oplus (\{02\} \bullet s_{3,c})$$

The $\oplus$ operator in these expressions denotes addition in GF(2^8), which corresponds to bitwise XOR. The multiplications are performed modulo the irreducible polynomial of the field. In the case of the AES algorithm the polynomial of $x^8 + x^4 + x^3 + x + 1$ is used.

Figure 12 illustrates the `MixColumns()` transformation.

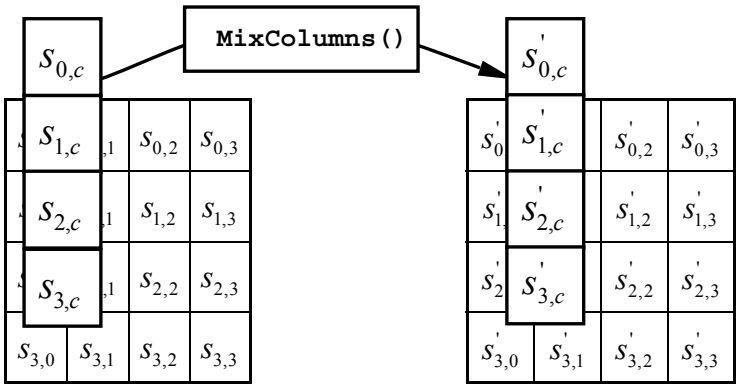

Figure 12. `MixColumns()` operates on the State column-by-column

5.1.3.6 `MixColumns`$^{-1}$`()` transformation

`MixColumns`$^{-1}$`()` is the inverse of the `MixColumns()` transformation. `MixColumns`$^{-1}$`()` operates on the *state* column-by-column. This transformation can be represented as a matrix multiplication, where each byte is interpreted as an element in the finite field GF(2^8) :

$$s'(x) = a^{-1}(x) \otimes s(x): \quad \begin{bmatrix} s'_{0,c} \\ s'_{1,c} \\ s'_{2,c} \\ s'_{3,c} \end{bmatrix} = \begin{bmatrix} 0e & 0b & 0d & 09 \\ 09 & 0e & 0b & 0d \\ 0d & 09 & 0e & 0b \\ 0b & 0d & 09 & 0e \end{bmatrix} \begin{bmatrix} s_{0,c} \\ s_{1,c} \\ s_{2,c} \\ s_{3,c} \end{bmatrix} \quad \text{for } 0 \le c < 4.$$

As a result of this multiplication, the four bytes in a column are replaced by the following:

$$s'_{0,c} = (\{0e\} \bullet s_{0,c}) \oplus (\{0b\} \bullet s_{1,c}) \oplus (\{0d\} \bullet s_{2,c}) \oplus (\{09\} \bullet s_{3,c})$$
$$s'_{1,c} = (\{09\} \bullet s_{0,c}) \oplus (\{0e\} \bullet s_{1,c}) \oplus (\{0b\} \bullet s_{2,c}) \oplus (\{0d\} \bullet s_{3,c})$$
$$s'_{2,c} = (\{0d\} \bullet s_{0,c}) \oplus (\{09\} \bullet s_{1,c}) \oplus (\{0e\} \bullet s_{2,c}) \oplus (\{0b\} \bullet s_{3,c})$$
$$s'_{3,c} = (\{0b\} \bullet s_{0,c}) \oplus (\{0d\} \bullet s_{1,c}) \oplus (\{09\} \bullet s_{2,c}) \oplus (\{0e\} \bullet s_{3,c})$$

5.1.3.7 `AddRoundKey()` transformation

In the `AddRoundKey()` transformation, a round key is added to the *state* by a simple bitwise XOR operation. Each round key consists of 4 words (128 bits) from the key schedule (described in 5.1.4). Those 4 words are each added into the columns of the *state*, such that

$$[s'_{0,c}, s'_{1,c}, s'_{2,c}, s'_{3,c}] = [s_{0,c}, s_{1,c}, s_{2,c}, s_{3,c}] \oplus [w_{(4*i+c)}] \quad \text{for } 0 \le c < 4,$$

© ISO/IEC 2005 – All rights reserved
Copyright International Organization for Standardization
Reproduced by IHS under license with ISO
No reproduction or networking permitted without license from IHS
Not for Resale

where $w_{(4*i+c)}$ are the *c*-th key schedule words of *i*-th round key $W_i = [w_{(4*i)}, w_{(4*i+1)}, w_{(4*i+2)}, w_{(4*i+3)}]$ and *i* is a value in the range $0 \leq i \leq \mathbf{Nr}$. In the encryption operation, the initial round key addition occurs when *i* = 0, prior to the first application of the round function. The application of the `AddRoundKey()` transformation to the ***Nr*** rounds of the encryption occurs when $1 \leq i \leq \mathbf{Nr}$.

The action of this transformation is illustrated in Figure 13. The byte address within words of the key schedule was described in Clause 5.1.4.

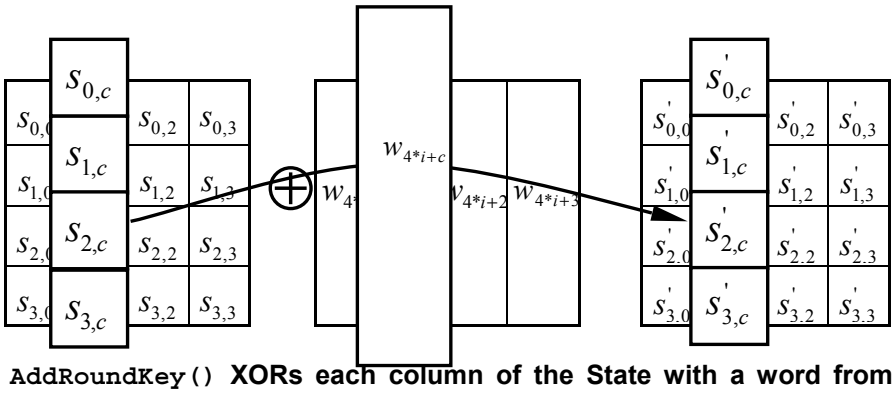

Figure 13. `AddRoundKey()` XORs each column of the State with a word from the key schedule

5.1.4 AES key schedule

The AES algorithm takes the cipher key *K* and performs a key expansion routine to generate a key schedule. The key expansion generates a total of 4 (***Nr*** + 1) words: the algorithm requires an initial set of 4 words, and each of the ***Nr*** rounds requires 4 words of key data. The resulting key schedule consists of a linear array of 4-byte words, denoted w_j, with *j* in the range $0 \leq j < 4(\mathbf{Nr} + 1)$.

The complete key expansion operation for AES-128 and AES-192 can be described as follows:

(1) $[w_0, w_1, w_2, w_3] = K$ and ***Nk*** = 4 for AES-128

$[w_0, w_1, w_2, w_3, w_4, w_5] = K$ and ***Nk*** = 6 for AES-192

(2) for *j* = ***Nk*** to $4(\mathbf{Nr} + 1)$:

if (*j* mod ***Nk*** = 0) then

$$w_j = w_{j-Nk} \oplus \texttt{SubBytes*}(\texttt{ShiftColumn}(w_{j-1})) \oplus R^{i/Nk}{}_c$$

else

$$w_j = w_{j-Nk} \oplus w_{j-1}$$

(3) $W_i = [w_{(4*i)}, w_{(4*i+1)}, w_{(4*i+2)}, w_{(4*i+3)}]$ for $0 \leq i \leq \mathbf{Nr}$.

In the above operation, the first round key W_0, used in the initial key addition, is directly filled with the 4 words of the secret key *K*. The 32-bit columns w_j of the remaining round keys are derived recursively. The `SubBytes*()` transformation substitutes the bytes of a single column in the same way as the `SubBytes()` transformation described in Clause 5.1.3.1. The `shiftcolumn()` transformation is an upward cyclic shift over one byte position. The constants $R^i{}_c$ are fixed 4-byte columns defined as $(\texttt{02}^{i-1}, \texttt{00}, \texttt{00}, \texttt{00})^T$ with {02} representing the element x in GF(2^8) (using the same irreducible polynomial $x^8 + x^4 + x^3 + x + 1$).

© ISO/IEC 2005 — All rights reserved
Copyright International Organization for Standardization
Reproduced by IHS under license with ISO
No reproduction or networking permitted without license from IHS
Not for Resale

The complete key expansion operation for AES-256 can be described as follows:

(1) $[w_0, w_1, w_2, w_3] = K_0$, $[w_4, w_5, w_6, w_7] = K_1$, $\boldsymbol{Nk} = 8$

(2) for $j = \boldsymbol{Nk}$ to $4(\boldsymbol{Nr} + 1) - 1$:

if (j mod $\boldsymbol{Nk} = 0$) then

$$w_j = w_{j-Nk} \oplus \texttt{SubBytes*}(\texttt{ShiftColumn}(w_{j-1})) \oplus R^{i/Nk}{}_C$$

else if (j mod $\boldsymbol{Nk} = 4$) then

$$w_j = w_{j-Nk} \oplus \texttt{SubBytes*}(w_{j-1})$$

else

$$w_j = w_{j-Nk} \oplus w_{j-1}$$

(3) $W_i = [w_{(4*i)}, w_{(4*i+1)}, w_{(4*i+2)}, w_{(4*i+3)}]$ for $0 \le i \le \boldsymbol{Nr}$.

In the above operation, K_0 and K_1 represent the first and the second half of 256-bit cipher key K respectively.

For decryption, the new round keys W'_i are computed from the original round keys as follows:

$W'_i = W_i$ (for $i = 0$ or $i = N_r$) or $\texttt{MixColumns}^{-1}(W_i)$ (for $1 \le i \le N_r - 1$)

5.2 Camellia

The Camellia algorithm is a symmetric block cipher that can process data blocks of 128 bits, using cipher keys with lengths of 128, 192 and 256 bits. This interface is the same as the AES algorithm's.

5.2.1 Camellia encryption

5.2.1.1 128-bit key

The encryption process for 128-bit key operates over 18 rounds and is shown in Figure 14. The transformation of a 128-bit block P into a 128-bit block C is defined as follows (L and R are variables with 64-bit length, and kw, k and kl are round keys with 64-bit length):

(1) $L_0 \,||\, R_0 = P \oplus (kw_1 \,||\, kw_2)$

(2) for i = 1 to 18:

$L_i = \mathrm{F}(L_{i-1}, k_i) \oplus R_{i-1}$

$R_i = L_{i-1}$

if (i = 6 or 12) then

$L_i = \mathrm{FL}(L_i, kl_{i/3-1})$

$R_i = \mathrm{FL}^{-1}(R_i, kl_{i/3})$

(3) $C = (R_{18} \oplus kw_3) \,||\, (L_{18} \oplus kw_4)$

--`,,`-`-`,,`,,`,`,,`---

© ISO/IEC 2005 - All rights reserved

Copyright International Organization for Standardization
Reproduced by IHS under license with ISO
No reproduction or networking permitted without license from IHS
Not for Resale

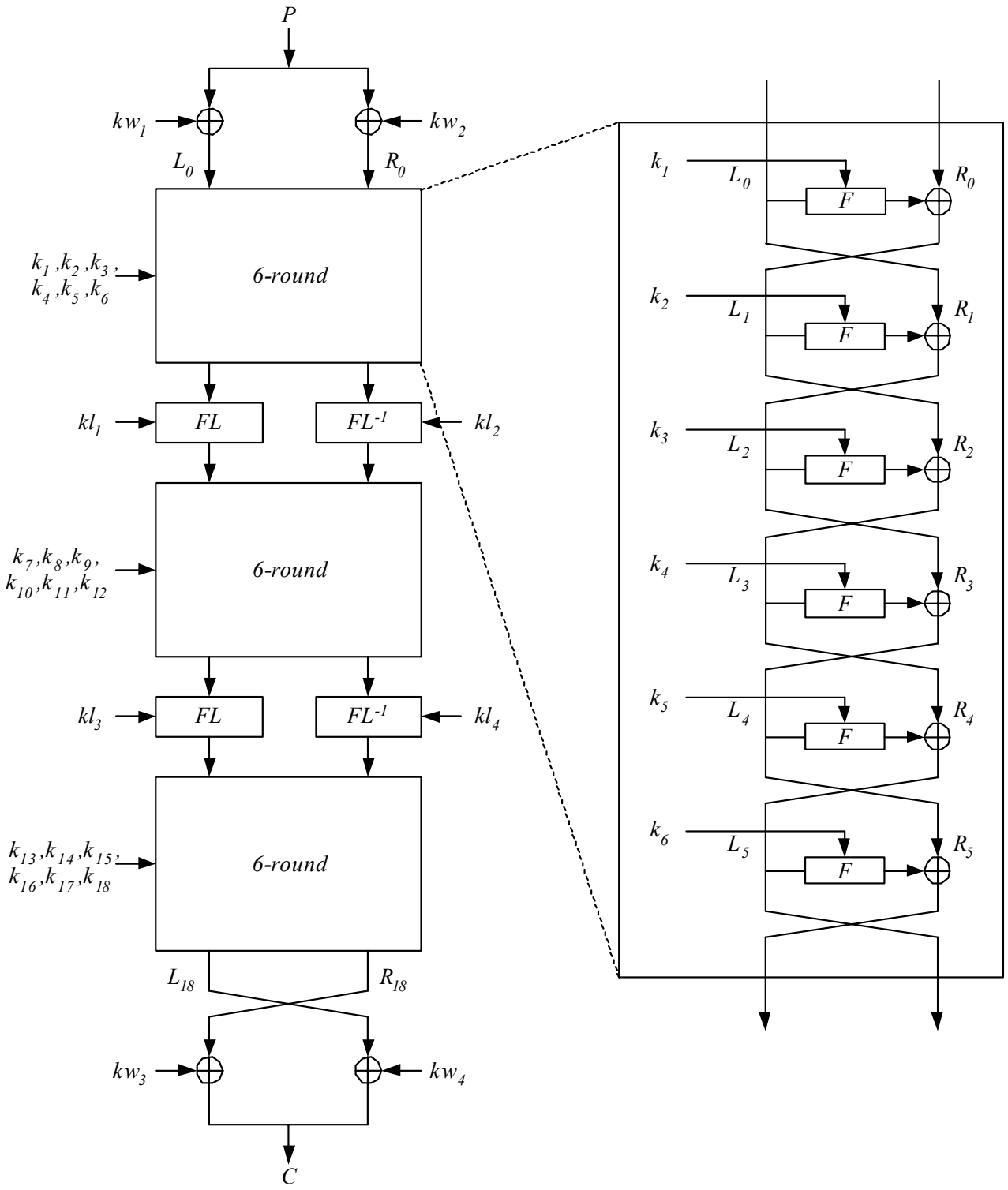

Figure 14. Encryption procedure of Camellia for 128-bit key

--`,,```,,,-`-`,,`,,`,`,,`---
© ISO/IEC 2005 — All rights reserved
Copyright International Organization for Standardization
Reproduced by IHS under license with ISO
No reproduction or networking permitted without license from IHS
Not for Resale

5.2.1.2 192-bit and 256-bit key

The encryption process for 192-bit or 256-bit key operates over 24 rounds and is shown in Figure 15. The transformation of a 128-bit block P into a 128-bit block C is defined as follows (L and R are variables with 64-bit length, and kw, k and kl are round keys with 64-bit length):

(1) $L_0 \,||\, R_0 = P \oplus (kw_1 \,||\, kw_2)$

(2) for i = 1 to 24:

$L_i = \mathrm{F}(L_{i-1}, k_i) \oplus R_{i-1}$

$R_i = L_{i-1}$

if (i = 6 or 12 or 18) then

$L_i = \mathrm{FL}(L_i, kl_{i/3-1})$

$R_i = \mathrm{FL}^{-1}(R_i, kl_{i/3})$

(3) $C = (R_{24} \oplus kw_3) \,||\, (L_{24} \oplus kw_4)$

5.2.2 Camellia decryption

5.2.2.1 128-bit key

The decryption process for 128-bit key is shown in Figure 16, and is identical in operation to encryption apart from the position and ordering of the round keys, which are reversed.

The decryption operation is thus defined as follows.

(1) $R_{18} \,||\, L_{18} = C \oplus (kw_3 \,||\, kw_4)$

(2) for i = 18 down to 1:

$R_{i-1} = \mathrm{F}(R_i, k_i) \oplus L_i$

$L_{i-1} = R_i$

if (i = 13 or 7) then

$R_{i-1} = \mathrm{FL}(R_{i-1}, kl_{(i-1)/3})$

$L_{i-1} = \mathrm{FL}^{-1}(L_{i-1}, kl_{(i-1)/3-1})$

(3) $P = (L_0 \oplus kw_1) \,||\, (R_0 \oplus kw_2)$

© ISO/IEC 2005 – All rights reserved
Copyright International Organization for Standardization
Reproduced by IHS under license with ISO
No reproduction or networking permitted without license from IHS
Not for Resale

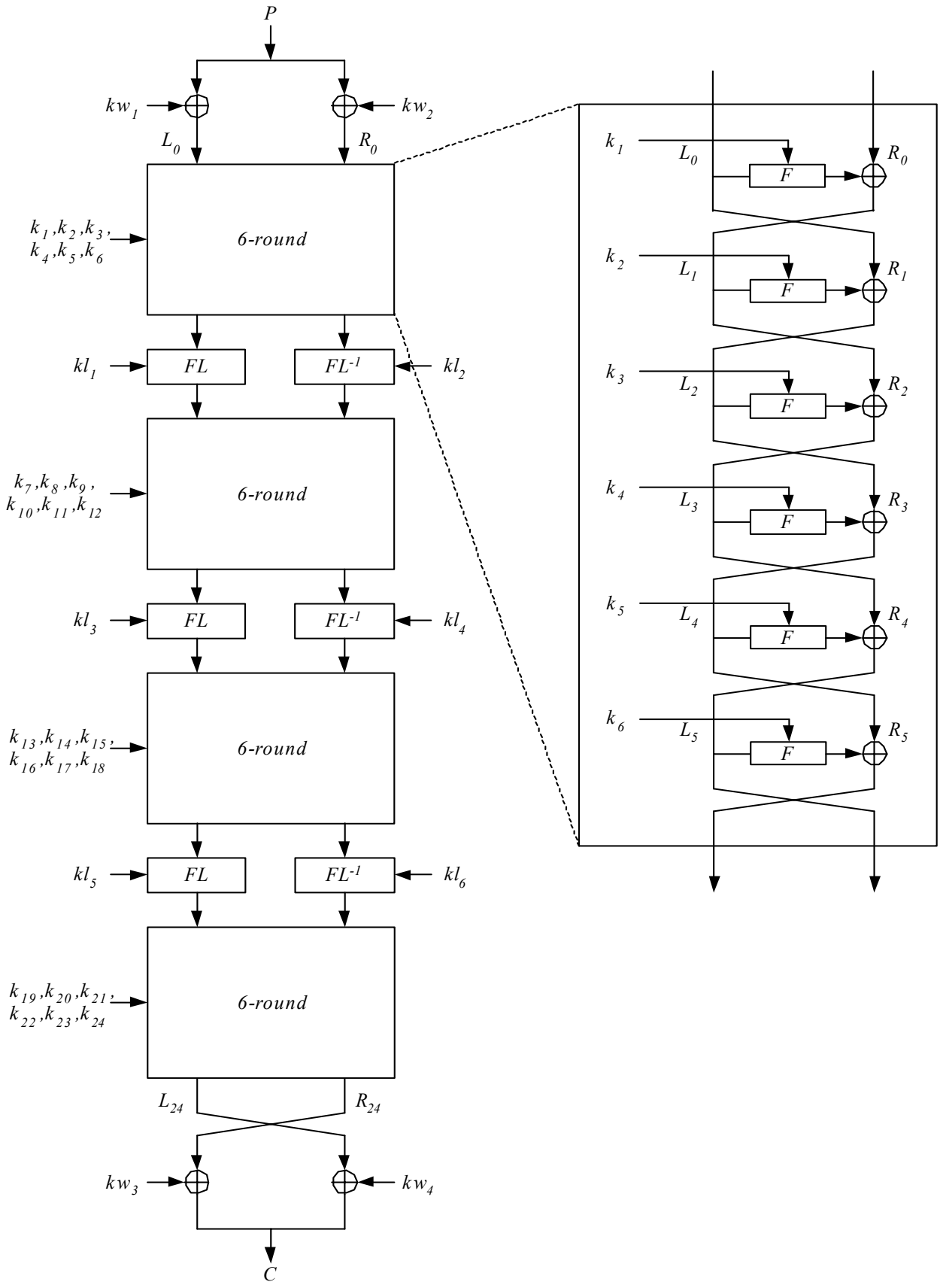

Figure 15. Encryption procedure of Camellia for 192-bit and 256-bit keys

--`,,``,,-`-`,,`,,`,`,,`---
© ISO/IEC 2005 — All rights reserved
Copyright International Organization for Standardization
Reproduced by IHS under license with ISO
No reproduction or networking permitted without license from IHS
Not for Resale

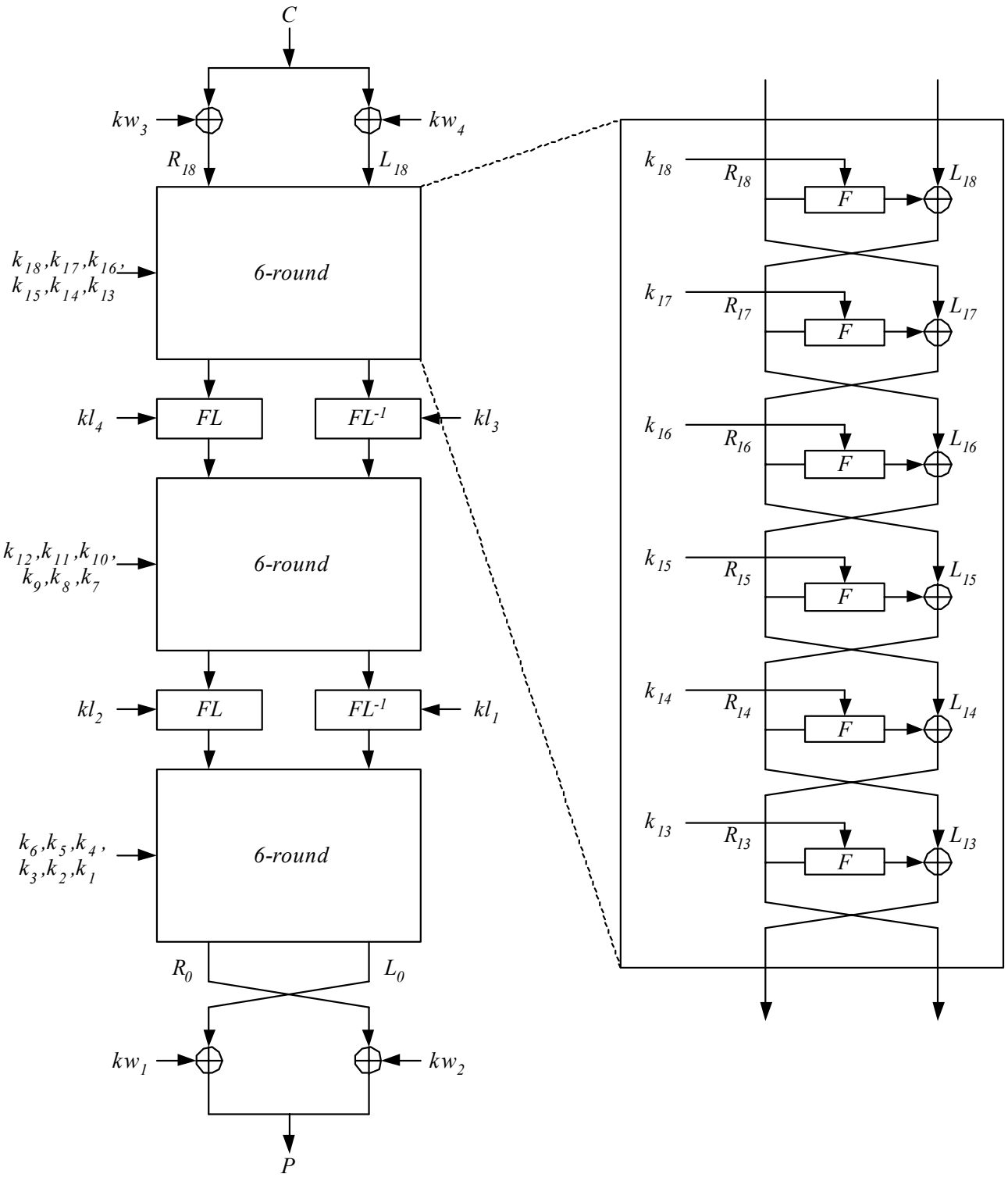

Figure 16. Decryption procedure of Camellia for 128-bit key

--`,,`,,-`-`,,`,,`,`,,`---
© ISO/IEC 2005 – All rights reserved
Copyright International Organization for Standardization
Reproduced by IHS under license with ISO
No reproduction or networking permitted without license from IHS
Not for Resale

5.2.2.2 192-bit and 256-bit key

The decryption process for 192-bit or 256-bit key is shown in Figure 17 and is identical in operation to encryption apart from the position and ordering of the round keys, which are reversed.

The decryption operation is thus defined as follows.

(1) $R_{24} \,||\, L_{24} = C \oplus (kw_3 \,||\, kw_4)$

(2) for $i = 24$ down to 1:

$R_{i-1} = \mathrm{F}(R_i, k_i) \oplus L_i$

$L_{i-1} = R_i$

if (i = 19 or 13 or 7) then

$R_{i-1} = \mathrm{FL}(R_{i-1}, kl_{(i-1)/3})$

$L_{i-1} = \mathrm{FL}^{-1}(L_{i-1}, kl_{(i-1)/3-1})$

(3) $P = (L_0 \oplus kw_1) \,||\, (R_0 \oplus kw_2)$

5.2.3 Camellia functions

The Camellia algorithm uses a number of functions, namely F, FL, $\mathrm{FL}^{-1}$and S-boxes which are now defined.

5.2.3.1 F-function

The F-function is shown in Figure 18. It comprises a bitwise XOR, followed by an application of 8 parallel 8x8-bit S-boxes, followed by a diffusion layer (the P-function). The variables, x_j, y_j, z_j, z'_j, are 8 bits wide, and the variables, L_i, k_i, L'_i, are 64 bits wide. The 64-bit input L_i is first bitwise XORed with a 64-bit round key k_i, and is then partitioned into eight 8-bit segments y_j such that

$$y_1 || \, y_2 || \, y_3 || \, y_4 || \, y_5 || \, y_6 || \, y_7 || \, y_8 = L_i \oplus k_i \,,$$

where

$$L_i = x_1 || \, x_2 || \, x_3 || \, x_4 || \, x_5 || \, x_6 || \, x_7 || \, x_8.$$

Each y_j is then passed through an 8x8-bit S-box s_t to give eight 8-bit segments z_j, where

$$z_1 = s_1 [y_1],\ z_2 = s_2 [y_2],\ z_3 = s_3 [y_3],\ z_4 = s_4 [y_4],\ z_5 = s_2 [y_5],\ z_6 = s_3 [y_6],\ z_7 = s_4 [y_7],\ z_8 = s_1 [y_8].$$

The eight 8-bit segments z_j are then acted on by the P-function, which is a diffusion layer which outputs eight 8-bit segments z'_j, where

$$z'_1 = z_1 \oplus z_3 \oplus z_4 \oplus z_6 \oplus z_7 \oplus z_8, \qquad z'_5 = z_1 \oplus z_2 \oplus z_6 \oplus z_7 \oplus z_8,$$

$$z'_2 = z_1 \oplus z_2 \oplus z_4 \oplus z_5 \oplus z_7 \oplus z_8, \qquad z'_6 = z_2 \oplus z_3 \oplus z_5 \oplus z_7 \oplus z_8,$$

$$z'_3 = z_1 \oplus z_2 \oplus z_3 \oplus z_5 \oplus z_6 \oplus z_8, \qquad z'_7 = z_3 \oplus z_4 \oplus z_5 \oplus z_6 \oplus z_8,$$

$$z'_4 = z_2 \oplus z_3 \oplus z_4 \oplus z_5 \oplus z_6 \oplus z_7, \qquad z'_8 = z_1 \oplus z_4 \oplus z_5 \oplus z_6 \oplus z_7.$$

© ISO/IEC 2005 — All rights reserved
Copyright International Organization for Standardization
Reproduced by IHS under license with ISO
No reproduction or networking permitted without license from IHS
Not for Resale

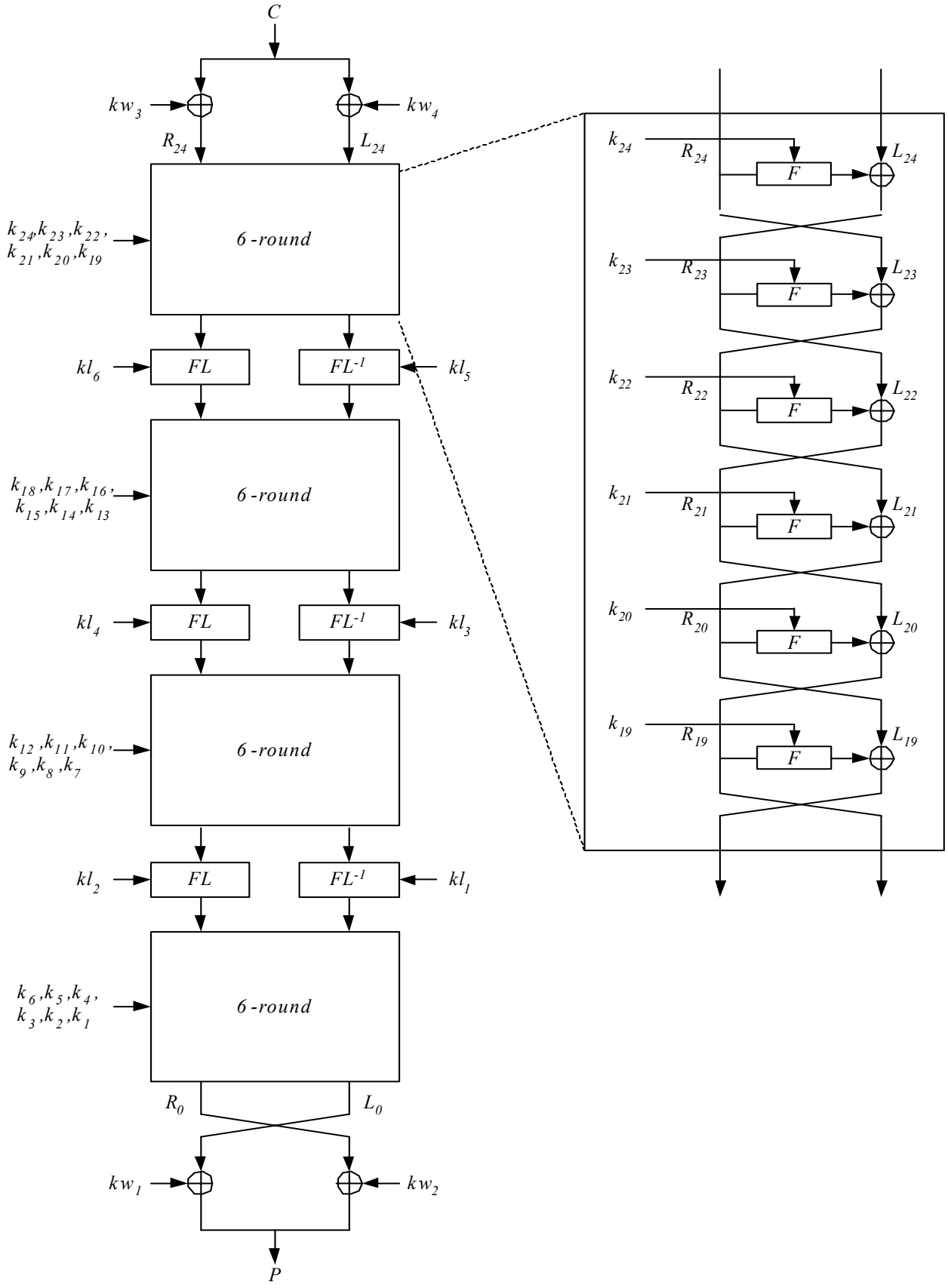

Figure 17. Decryption procedure of Camellia for 192-bit and 256-bit keys

© ISO/IEC 2005 – All rights reserved

Copyright International Organization for Standardization
Reproduced by IHS under license with ISO
No reproduction or networking permitted without license from IHS
Not for Resale

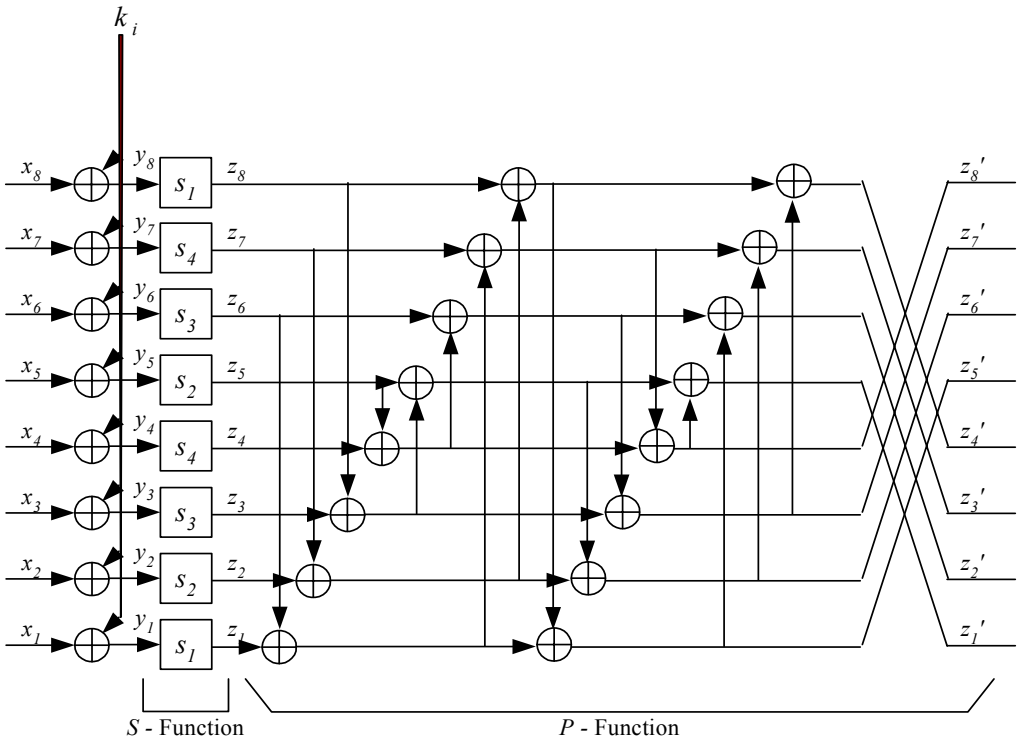

Figure 18. F-function

The P-function can alternatively be represented in matrix-vector form as

$$\begin{pmatrix} z_8 \\ z_7 \\ \vdots \\ z_1 \end{pmatrix} \mapsto \begin{pmatrix} z'_8 \\ z'_7 \\ \vdots \\ z'_1 \end{pmatrix} = P \begin{pmatrix} z_8 \\ z_7 \\ \vdots \\ z_1 \end{pmatrix},$$

where

$$P = \begin{pmatrix} 0 & 1 & 1 & 1 & 1 & 0 & 0 & 1 \\ 1 & 0 & 1 & 1 & 1 & 1 & 0 & 0 \\ 1 & 1 & 0 & 1 & 0 & 1 & 1 & 0 \\ 1 & 1 & 1 & 0 & 0 & 0 & 1 & 1 \\ 0 & 1 & 1 & 1 & 1 & 1 & 1 & 0 \\ 1 & 0 & 1 & 1 & 0 & 1 & 1 & 1 \\ 1 & 1 & 0 & 1 & 1 & 0 & 1 & 1 \\ 1 & 1 & 1 & 0 & 1 & 1 & 0 & 1 \end{pmatrix}.$$

The 64-bit output of the F-function L'_i is then constructed by concatenating the 8-bit z'_j, where

$$L'_i = z'_1 || z'_2 || z'_3 || z'_4 || z'_5 || z'_6 || z'_7 || z'_8.$$

© ISO/IEC 2005 — All rights reserved
Copyright International Organization for Standardization
Reproduced by IHS under license with ISO
No reproduction or networking permitted without license from IHS
Not for Resale

5.2.3.2 FL-function

The FL-function is shown in Figure 19. The FL-function is defined as follows (X and Y are 64-bit data, kl is a 64-bit round key; X_L, X_R,Y_L, Y_R, kl_{iL}, kl_{iR} are 32-bit wide):

(1) $X_L \,||\, X_R = X$, $kl_{iL} \,||\, kl_{iR} = kl_i$

(2) $Y_R = ((X_L \wedge kl_{iL}) <<<_1) \oplus X_R$, $Y_L = (Y_R \vee kl_{iR}) \oplus X_L$

(3) $Y = Y_L \,||\, Y_R$

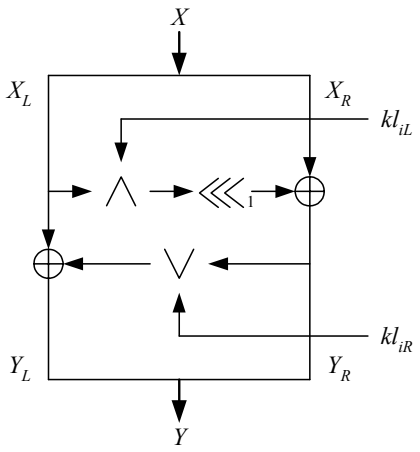

Figure 19. FL-function

5.2.3.3 FL^{-1}-function

The FL^{-1}-function is shown in Figure 20. The FL^{-1}-function is defined as follows (X and Y are 64-bit data, kl is a 64-bit round key; X_L, X_R,Y_L, Y_R, kl_{iL}, kl_{iR} are 32-bit wide):

(1) $Y_L \,||\, Y_R = Y$, $kl_{iL} \,||\, kl_{iR} = kl_i$

(2) $X_L = (Y_R \vee kl_{iR}) \oplus Y_L$, $X_R = ((X_L \wedge kl_{iL}) <<<_1) \oplus Y_R$

(3) $X = X_L \,||\, X_R$

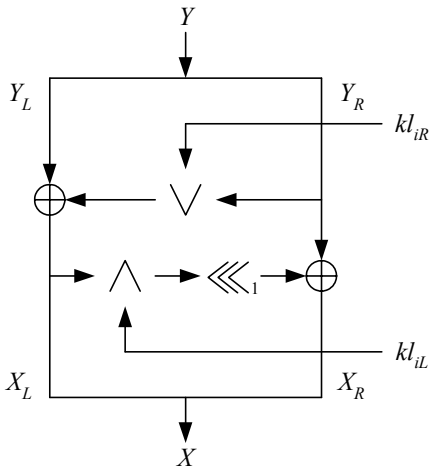

Figure 20. FL^{-1}-function

© ISO/IEC 2005 – All rights reserved
Copyright International Organization for Standardization
Reproduced by IHS under license with ISO
No reproduction or networking permitted without license from IHS
Not for Resale

5.2.3.4 S-boxes

S-boxes s_1, s_2, s_3 and s_4 are given in the following clauses. Each S-box accepts an 8-bit input and yields an 8-bit output. They can be also described in a simple algebraic form. The algebraic form of s_1 is shown in Clause C.2.

5.2.3.4.1 S-box s_1

s_1 is given in Table 7.

For example, if the input to s_1 is {53}, then the substitution value would be determined by the intersection of the row with index '5' and the column with index '3' in Table 7. This would result in s_1 having a value of {c2}.

Table 7. The S-box s_1

	0	1	2	3	4	5	6	7	8	9	a	b	c	d	e	f
0	70	82	2c	ec	b3	27	c0	e5	e4	85	57	35	ea	0c	ae	41
1	23	ef	6b	93	45	19	a5	21	ed	0e	4f	4e	1d	65	92	bd
2	86	b8	af	8f	7c	eb	1f	ce	3e	30	dc	5f	5e	c5	0b	1a
3	a6	e1	39	ca	d5	47	5d	3d	d9	01	5a	d6	51	56	6c	4d
4	8b	0d	9a	66	fb	cc	b0	2d	74	12	2b	20	f0	b1	84	99
5	df	4c	cb	c2	34	7e	76	05	6d	b7	a9	31	d1	17	04	d7
6	14	58	3a	61	de	1b	11	1c	32	0f	9c	16	53	18	f2	22
7	fe	44	cf	b2	c3	b5	7a	91	24	08	e8	a8	60	fc	69	50
8	aa	d0	a0	7d	a1	89	62	97	54	5b	1e	95	e0	ff	64	d2
9	10	c4	00	48	a3	f7	75	db	8a	03	e6	da	09	3f	dd	94
a	87	5c	83	02	cd	4a	90	33	73	67	f6	f3	9d	7f	bf	e2
b	52	9b	d8	26	c8	37	c6	3b	81	96	6f	4b	13	be	63	2e
c	e9	79	a7	8c	9f	6e	bc	8e	29	f5	f9	b6	2f	fd	b4	59
d	78	98	06	6a	e7	46	71	ba	d4	25	ab	42	88	a2	8d	fa
e	72	07	b9	55	f8	ee	ac	0a	36	49	2a	68	3c	38	f1	a4
f	40	28	d3	7b	bb	c9	43	c1	15	e3	ad	f4	77	c7	80	9e

5.2.3.4.2 S-box s_2

s_2 is given as follows:

$$s_2: y = s_1(x) <<<_1.$$

--`,,`,,`-`-`,,`,,`,`,,`---
Copyright International Organization for Standardization
Reproduced by IHS under license with ISO
No reproduction or networking permitted without license from IHS
© ISO/IEC 2005 — All rights reserved
Not for Resale

Table 8. The S-box s_2

	0	1	2	3	4	5	6	7	8	9	a	b	c	d	e	f
0	e0	05	58	d9	67	4e	81	cb	c9	0b	ae	6a	d5	18	5d	82
1	46	df	d6	27	8a	32	4b	42	db	1c	9e	9c	3a	ca	25	7b
2	0d	71	5f	1f	f8	d7	3e	9d	7c	60	b9	be	bc	8b	16	34
3	4d	c3	72	95	ab	8e	ba	7a	b3	02	b4	ad	a2	ac	d8	9a
4	17	1a	35	cc	f7	99	61	5a	e8	24	56	40	e1	63	09	33
5	bf	98	97	85	68	fc	ec	0a	da	6f	53	62	a3	2e	08	af
6	28	b0	74	c2	bd	36	22	38	64	1e	39	2c	a6	30	e5	44
7	fd	88	9f	65	87	6b	f4	23	48	10	d1	51	c0	f9	d2	a0
8	55	a1	41	fa	43	13	c4	2f	a8	b6	3c	2b	c1	ff	c8	a5
9	20	89	00	90	47	ef	ea	b7	15	06	cd	b5	12	7e	bb	29
a	0f	b8	07	04	9b	94	21	66	e6	ce	ed	e7	3b	fe	7f	c5
b	a4	37	b1	4c	91	6e	8d	76	03	2d	de	96	26	7d	c6	5c
c	d3	f2	4f	19	3f	dc	79	1d	52	eb	f3	6d	5e	fb	69	b2
d	f0	31	0c	d4	cf	8c	e2	75	a9	4a	57	84	11	45	1b	f5
e	e4	0e	73	aa	f1	dd	59	14	6c	92	54	d0	78	70	e3	49
f	80	50	a7	f6	77	93	86	83	2a	c7	5b	e9	ee	8f	01	3d

5.2.3.4.3 S-box s_3

s_3 is given as follows:

$$s_3: y = s_1(x) <<<_7.$$

Table 9. The S-box s_3

	0	1	2	3	4	5	6	7	8	9	a	b	c	d	e	f
0	38	41	16	76	d9	93	60	f2	72	c2	ab	9a	75	06	57	a0
1	91	f7	b5	c9	a2	8c	d2	90	f6	07	a7	27	8e	b2	49	de
2	43	5c	d7	c7	3e	f5	8f	67	1f	18	6e	af	2f	e2	85	0d
3	53	f0	9c	65	ea	a3	ae	9e	ec	80	2d	6b	a8	2b	36	a6
4	c5	86	4d	33	fd	66	58	96	3a	09	95	10	78	d8	42	cc
5	ef	26	e5	61	1a	3f	3b	82	b6	db	d4	98	e8	8b	02	eb
6	0a	2c	1d	b0	6f	8d	88	0e	19	87	4e	0b	a9	0c	79	11
7	7f	22	e7	59	e1	da	3d	c8	12	04	74	54	30	7e	b4	28
8	55	68	50	be	d0	c4	31	cb	2a	ad	0f	ca	70	ff	32	69
9	08	62	00	24	d1	fb	ba	ed	45	81	73	6d	84	9f	ee	4a
a	c3	2e	c1	01	e6	25	48	99	b9	b3	7b	f9	ce	bf	df	71
b	29	cd	6c	13	64	9b	63	9d	c0	4b	b7	a5	89	5f	b1	17
c	f4	bc	d3	46	cf	37	5e	47	94	fa	fc	5b	97	fe	5a	ac
d	3c	4c	03	35	f3	23	b8	5d	6a	92	d5	21	44	51	c6	7d
e	39	83	dc	aa	7c	77	56	05	1b	a4	15	34	1e	1c	f8	52
f	20	14	e9	bd	dd	e4	a1	e0	8a	f1	d6	7a	bb	e3	40	4f

© ISO/IEC 2005 – All rights reserved
Copyright International Organization for Standardization
Reproduced by IHS under license with ISO
No reproduction or networking permitted without license from IHS
Not for Resale

5.2.3.4.4 S-box s_4

s_4 is given as follows:

$$s_4: y = s_1(x<<<_1).$$

Table 10. The S-box s_4

	0	1	2	3	4	5	6	7	8	9	a	b	c	d	e	f
0	70	2c	b3	c0	e4	57	ea	ae	23	6b	45	a5	ed	4f	1d	92
1	86	af	7c	1f	3e	dc	5e	0b	a6	39	d5	5d	d9	5a	51	6c
2	8b	9a	fb	b0	74	2b	f0	84	df	cb	34	76	6d	a9	d1	04
3	14	3a	de	11	32	9c	53	f2	fe	cf	c3	7a	24	e8	60	69
4	aa	a0	a1	62	54	1e	e0	64	10	00	a3	75	8a	e6	09	dd
5	87	83	cd	90	73	f6	9d	bf	52	d8	c8	c6	81	6f	13	63
6	e9	a7	9f	bc	29	f9	2f	b4	78	06	e7	71	d4	ab	88	8d
7	72	b9	f8	ac	36	2a	3c	f1	40	d3	bb	43	15	ad	77	80
8	82	ec	27	e5	85	35	0c	41	ef	93	19	21	0e	4e	65	bd
9	b8	8f	eb	ce	30	5f	c5	1a	e1	ca	47	3d	01	d6	56	4d
a	0d	66	cc	2d	12	20	b1	99	4c	c2	7e	05	b7	31	17	d7
b	58	61	1b	1c	0f	16	18	22	44	b2	b5	91	08	a8	fc	50
c	d0	7d	89	97	5b	95	ff	d2	c4	48	f7	db	03	da	3f	94
d	5c	02	4a	33	67	f3	7f	e2	9b	26	37	3b	96	4b	be	2e
e	79	8c	6e	8e	f5	b6	fd	59	98	6a	46	ba	25	42	a2	fa
f	07	55	ee	0a	49	68	38	a4	28	7b	c9	c1	e3	f4	c7	9e

5.2.4 Camellia key schedule

The key schedule is shown in Figure 21, Tables 12 and 13. For the 128-bit key version, the key K is the 128-bit key K_L, with the 128-bit key K_R set to all zero bits. Thus,

$$K = K_L, K_R = 0.$$

For the 192-bit key version, the key K is the 128-bit key K_L and the leftmost 64-bits of K_R, K_{RL}, with the rightmost 64 bits of K_R, K_{RR}, set to the bitwise negation of the leftmost 64 bits of K_R, K_{RL}. Thus,

$$K = K_L \,||\, K_{RL}, K_{RR} = \overline{K_{RL}}, K_R = K_{RL} \,||\, K_{RR}.$$

For the 256-bit key version, the key K is the 128-bit key K_L and the 128-bit key K_R . Thus,

$$K = K_L \,||\, K_R.$$

The key schedule makes use of the F-function of the encryption module, and is the same for encryption and decryption. The key K is encrypted by means of the F-function using key schedule constants, where these constants Σ_i are defined as continuous values from the hexadecimal representation of the square root of the i-th prime. The round keys are then generated partly from rotated values of the key K (where K equals to K_L, $K_L \,||\, K_{RL}$ or $K_L \,||\, K_R$, for a 128-bit, 192-bit or 256-bit key K, respectively), and partly from rotated values of the 'encrypted' keys, K_A and K_B (where K_A and K_B are 128-bit wide).

© ISO/IEC 2005 — All rights reserved
Copyright International Organization for Standardization
Reproduced by IHS under license with ISO
No reproduction or networking permitted without license from IHS
Not for Resale

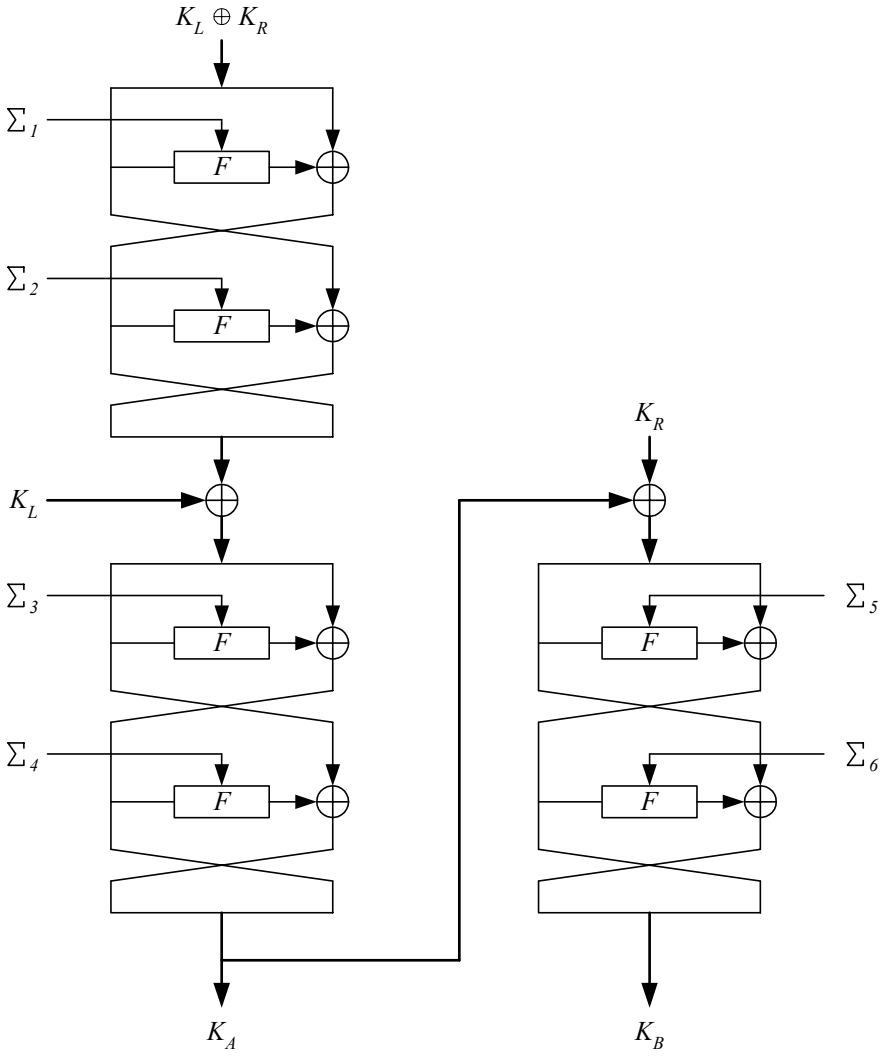

Figure 21. Main part of key schedule

For the 128-bit key version, the output of the main part of key schedule is the 128-bit subkey K_A with the right side of Figure 21 omitted and K_B not generated or used. For the 192-bit and 256-bit key versions, the outputs of the main part of key schedule are the 128-bit subkey K_A and the 128-bit subkey K_B. The key schedule comprises two or three 2-round operations for 128-bit or 192/256-bit key versions, respectively. Each 2-round operation is 'keyed' by a pair of constants Σ_i.

The 128-bit input to the first 2-round operation on the left side of Figure 21 is $K_L \oplus K_R$, and this 2-round operation is 'keyed' by two 64-bit constants Σ_1 and Σ_2. The 128-bit output from the first 2-round operation is then bitwise XORed with K_L before input to the second 2-round operation on the left side of Figure 21. This second 2-round operation is 'keyed' by two 64-bit constants Σ_3 and Σ_4. The 128-bit output from the second 2-round operation is K_A. For 192-bit or 256-bit key versions, K_A is then bitwise XORed with the 128-bit subkey K_R before inputting result to the third 2-round operation, which is on the right side of Figure 21. This third 2-round operation is 'keyed' by two 64-bit constants Σ_5 and Σ_6. The 128-bit output from the third 2-round operation is K_B.

© ISO/IEC 2005 – All rights reserved
Copyright International Organization for Standardization
Reproduced by IHS under license with ISO
No reproduction or networking permitted without license from IHS
Not for Resale

The complete key schedule operation can be described as follows (K_a, K_A and K_B are 128-bit wide):

(1) K_a = 2RoundFeistel($K_L \oplus K_R$, Σ_1, Σ_2)

(2) K_A = 2RoundFeistel($K_a \oplus K_L$, Σ_3, Σ_4)

(3) K_B = 2RoundFeistel($K_A \oplus K_R$, Σ_5, Σ_6) (192/256-bit key only)

where the 128-bit input to 2RoundFeistel is split into two 64-bit parts $L_0 \,||\, R_0$, the 128-bit output from 2RoundFeistel is also split into two 64-bit parts $L_2 \,||\, R_2$, and the two 64-bit 'round key' inputs to 2RoundFeistel are Σ_i and Σ_{i+1}.

2RoundFeistel is then described as

(1) for j = 0, 1:

$L_{j+1} = F(L_j, \Sigma_{i+j}) \oplus R_j$

$R_{j+1} = L_j$

These 64-bit key schedule constants are defined in Table11.

Table 11. Constants in the key schedule

	Constants
Σ_1	a09e667f3bcc908b
Σ_2	b67ae8584caa73b2
Σ_3	c6ef372fe94f82be
Σ_4	54ff53a5f1d36f1c
Σ_5	10e527fade682d1d
Σ_6	b05688c2b3e6c1fd

Finally the 64-bit round keys, k, kw and kl, are derived from the 128-bit subkeys, K_L, K_R, K_A and K_B. Table 12 is for the 128-bit key version and Table 13 is for the 192-bit or 256-bit key version.

© ISO/IEC 2005 — All rights reserved
Copyright International Organization for Standardization
Reproduced by IHS under license with ISO
No reproduction or networking permitted without license from IHS
Not for Resale

Table 12. Round keys for 128-bit key

	Round key	value
	kw_1	$(K_L<<<_0)_L$
	kw_2	$(K_L<<<_0)_R$
F (Round 1)	k_1	$(K_A<<<_0)_L$
F (Round 2)	k_2	$(K_A<<<_0)_R$
F (Round 3)	k_3	$(K_L<<<_{15})_L$
F (Round 4)	k_4	$(K_L<<<_{15})_R$
F (Round 5)	k_5	$(K_A<<<_{15})_L$
F (Round 6)	k_6	$(K_A<<<_{15})_R$
FL	kl_1	$(K_A<<<_{30})_L$
FL^{-1}	kl_2	$(K_A<<<_{30})_R$
F (Round 7)	k_7	$(K_L<<<_{45})_L$
F (Round 8)	k_8	$(K_L<<<_{45})_R$
F (Round 9)	k_9	$(K_A<<<_{45})_L$
F (Round 10)	k_{10}	$(K_L<<<_{60})_R$
F (Round 11)	k_{11}	$(K_A<<<_{60})_L$
F (Round 12)	k_{12}	$(K_A<<<_{60})_R$
FL	kl_3	$(K_L<<<_{77})_L$
FL^{-1}	kl_4	$(K_L<<<_{77})_R$
F (Round 13)	k_{13}	$(K_L<<<_{94})_L$
F (Round 14)	k_{14}	$(K_L<<<_{94})_R$
F (Round 15)	k_{15}	$(K_A<<<_{94})_L$
F (Round 16)	k_{16}	$(K_A<<<_{94})_R$
F (Round 17)	k_{17}	$(K_L<<<_{111})_L$
F (Round 18)	k_{18}	$(K_L<<<_{111})_R$
	kw_3	$(K_A<<<_{111})_L$
	kw_4	$(K_A<<<_{111})_R$

Table 13. Round keys for 192/256-bit key

	Round key	value
	kw_1	$(K_L<<<_0)_L$
	kw_2	$(K_L<<<_0)_R$
F (Round 1)	k_1	$(K_B<<<_0)_L$
F (Round 2)	k_2	$(K_B<<<_0)_R$
F (Round 3)	k_3	$(K_R<<<_{15})_L$
F (Round 4)	k_4	$(K_R<<<_{15})_R$
F (Round 5)	k_5	$(K_A<<<_{15})_L$
F (Round 6)	k_6	$(K_A<<<_{15})_R$
FL	kl_1	$(K_R<<<_{30})_L$
FL^{-1}	kl_2	$(K_R<<<_{30})_R$
F (Round 7)	k_7	$(K_B<<<_{30})_L$
F (Round 8)	k_8	$(K_B<<<_{30})_R$
F (Round 9)	k_9	$(K_L<<<_{45})_L$
F (Round 10)	k_{10}	$(K_L<<<_{45})_R$
F (Round 11)	k_{11}	$(K_A<<<_{45})_L$
F (Round 12)	k_{12}	$(K_A<<<_{45})_R$
FL	kl_3	$(K_L<<<_{60})_L$
FL^{-1}	kl_4	$(K_L<<<_{60})_R$
F (Round 13)	k_{13}	$(K_R<<<_{60})_L$
F (Round 14)	k_{14}	$(K_R<<<_{60})_R$
F (Round 15)	k_{15}	$(K_B<<<_{60})_L$
F (Round 16)	k_{16}	$(K_B<<<_{60})_R$
F (Round 17)	k_{17}	$(K_L<<<_{77})_L$
F (Round 18)	k_{18}	$(K_L<<<_{77})_R$
FL	kl_5	$(K_A<<<_{77})_L$
FL^{-1}	kl_6	$(K_A<<<_{77})_R$
F (Round 19)	k_{19}	$(K_R<<<_{94})_L$
F (Round 20)	k_{20}	$(K_R<<<_{94})_R$
F (Round 21)	k_{21}	$(K_A<<<_{94})_L$
F (Round 22)	k_{22}	$(K_A<<<_{94})_R$
F (Round 23)	k_{23}	$(K_L<<<_{111})_L$
F (Round 24)	k_{24}	$(K_L<<<_{111})_R$
	kw_3	$(K_B<<<_{111})_L$
	kw_4	$(K_B<<<_{111})_R$

--`,,```,,,,````-`-`,,`,,`,`,,`---

© ISO/IEC 2005 – All rights reserved
Copyright International Organization for Standardization
Reproduced by IHS under license with ISO
No reproduction or networking permitted without license from IHS
Not for Resale

5.3 SEED

The SEED algorithm is a symmetric block cipher that can process data blocks of 128 bits, using a cipher key with length of 128 bits.

5.3.1 SEED encryption

The encryption operation is as shown in Figure 22. The transformation of a 128-bit block P into a 128-bit block C is defined as follows (K is a key):

(1) $P = L_0 \,||\, R_0$

(2) for i = 1 to 15:

$L_i = R_{i-1}$

$R_i = L_{i-1} \oplus \mathrm{F}(R_{i-1}, K_i)$

(3) $L_{16} = L_{15} \oplus \mathrm{F}(R_{15}, K_{16})$, $R_{16} = R_{15}$

(4) $C = L_{16} \,||\, R_{16}$

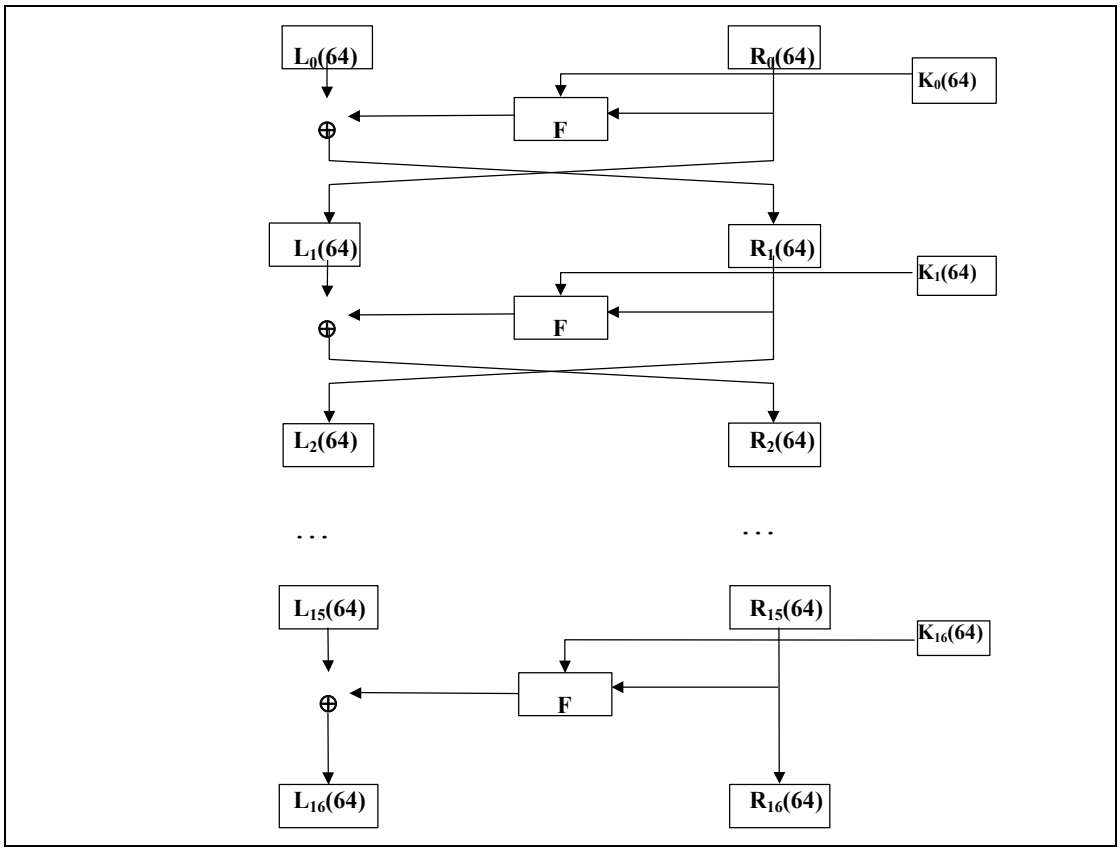

Figure 22. Structure of SEED

5.3.2 SEED decryption

The decryption operation is identical to the encryption operation given above, except that the rounds (and therefore the subkeys) are used in reverse order to compute (L_0, R_0) from (R_{16}, L_{16}).

© ISO/IEC 2005 — All rights reserved
Copyright International Organization for Standardization
Reproduced by IHS under license with ISO
No reproduction or networking permitted without license from IHS
Not for Resale

5.3.3 SEED functions

5.3.3.1 Round Function F

The Round Function F is defined as follows (*C* and *D* are data, *K* is a key):

$$C' = G[G[G\{(C \oplus k_{i,0}) \oplus (D \oplus k_{i,1})\} + (C \oplus k_{i,0})] + G\{(C \oplus k_{i,0}) \oplus (D \oplus k_{i,1})\}]$$
$$+ G[G\{(C \oplus k_{i,0}) \oplus (D \oplus k_{i,1})\} + (C \oplus k_{i,0})]$$

$$D' = G[G[G\{(C \oplus k_{i,0}) \oplus (D \oplus k_{i,1})\} + (C \oplus k_{i,0})] + G\{(C \oplus k_{i,0}) \oplus (D \oplus k_{i,1})\}]$$

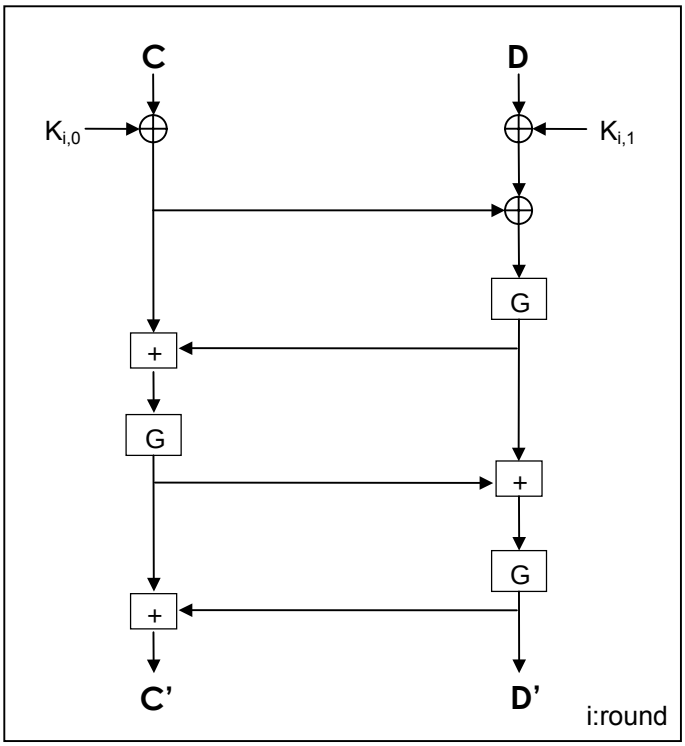

Figure 23. Round Function F

5.3.3.2 Function G

The function G has two layers: a layer of two 8×8-bit S-boxes and a layer of block permutation of sixteen 8-bit sub-blocks.

The outputs a', b', c', d' of G with four 8-bit inputs a, b, c, d are as follows:

$$a' = (S_1(a)\hat{}m_0) \oplus (S_2(b)\hat{}m_1) \oplus (S_1(c)\hat{}m_2) \oplus (S_2(d)\hat{}m_3)$$

$$b' = (S_1(a)\hat{}m_1) \oplus (S_2(b)\hat{}m_2) \oplus (S_1(c)\hat{}m_3) \oplus (S_2(d)\hat{}m_0)$$

$$c' = (S_1(a)\hat{}m_2) \oplus (S_2(b)\hat{}m_3) \oplus (S_1(c)\hat{}m_0) \oplus (S_2(d)\hat{}m_1)$$

$$d' = (S_1(a)\hat{}m_3) \oplus (S_2(b)\hat{}m_0) \oplus (S_1(c)\hat{}m_1) \oplus (S_2(d)\hat{}m_2)$$

where, $m_0 = \{fc\}$, $m_1 = \{f3\}$, $m_2 = \{cf\}$ and $m_3 = \{3f\}$.

© ISO/IEC 2005 – All rights reserved

Copyright International Organization for Standardization
Reproduced by IHS under license with ISO
No reproduction or networking permitted without license from IHS
Not for Resale

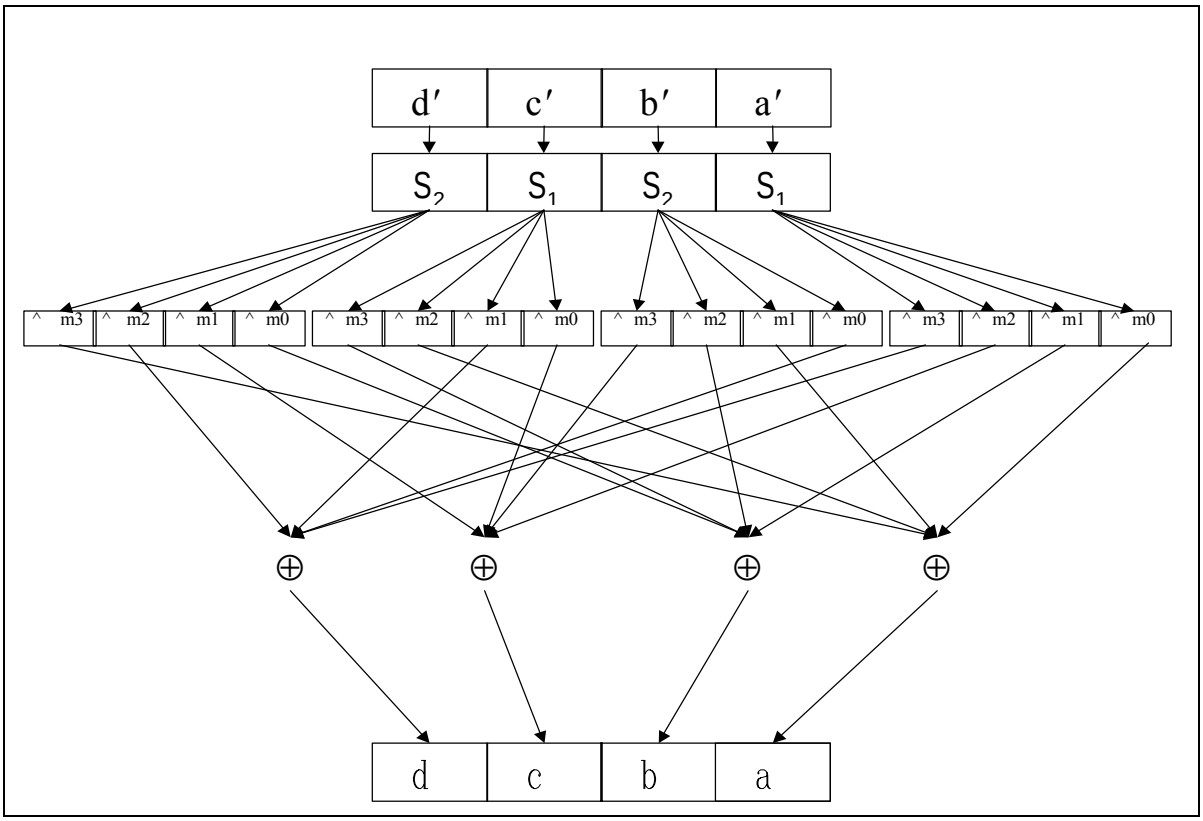

Figure 24. The Function G

5.3.3.3 S-boxes

Two S-boxes S_1, S_2 are part of G and defined as follows:

$$S_i : Z_{2^8} \to Z_{2^8}, S_i(x) = A^{(i)} \bullet x^{n_i} \oplus b_i$$

where n_1=247, n_2=251, b_1=169, b_2=56 and

$$A^{(1)} = \begin{pmatrix} 1 & 0 & 0 & 0 & 1 & 0 & 1 & 0 \\ 1 & 1 & 1 & 1 & 1 & 1 & 1 & 0 \\ 1 & 0 & 0 & 0 & 0 & 1 & 0 & 1 \\ 0 & 1 & 0 & 0 & 0 & 0 & 1 & 0 \\ 0 & 1 & 0 & 0 & 0 & 1 & 0 & 1 \\ 0 & 0 & 1 & 0 & 0 & 0 & 0 & 1 \\ 1 & 0 & 0 & 0 & 1 & 0 & 0 & 0 \\ 0 & 0 & 0 & 1 & 0 & 1 & 0 & 0 \end{pmatrix}, A^{(2)} = \begin{pmatrix} 0 & 1 & 0 & 0 & 0 & 1 & 0 & 1 \\ 1 & 0 & 0 & 0 & 0 & 1 & 0 & 1 \\ 1 & 1 & 1 & 1 & 1 & 1 & 1 & 0 \\ 0 & 0 & 1 & 0 & 0 & 0 & 0 & 1 \\ 1 & 0 & 0 & 0 & 1 & 0 & 1 & 0 \\ 1 & 0 & 0 & 0 & 1 & 0 & 0 & 0 \\ 0 & 1 & 0 & 0 & 0 & 0 & 1 & 0 \\ 0 & 0 & 0 & 1 & 0 & 1 & 0 & 0 \end{pmatrix}.$$

Notice that $A^{(i)} \bullet x^{n_i} \oplus b_i$ is an affine transformation of x^{n_i}. For any x in Z_{2^8}, x can be expressed as a binary vector form x = (x_7, … , x_0) (that is, $x = x_7 2^7 + x_6 2^6 + \ldots + x_1 2 + x_0$). We use the primitive polynomial $p(x) = x^8 + x^6 + x^5 + x + 1$ to represent x^{n_i} in Z_{2^8}.

S-boxes S_1 and S_2 are described in Tables 14 and 15, respectively.

© ISO/IEC 2005 — All rights reserved
Copyright International Organization for Standardization
Reproduced by IHS under license with ISO
No reproduction or networking permitted without license from IHS
Not for Resale

Table 14. S_1 – box

	0	1	2	3	4	5	6	7	8	9	a	b	c	d	e	f
0	a9	85	d6	d3	54	1d	ac	25	5d	43	18	1e	51	fc	ca	63
1	28	44	20	9d	e0	e2	c8	17	a5	8f	03	7b	bb	13	d2	ee
2	70	8c	3f	a8	32	dd	f6	74	ec	95	0b	57	5c	5b	bd	01
3	24	1c	73	98	10	cc	f2	d9	2c	e7	72	83	9b	d1	86	c9
4	60	50	a3	eb	0d	b6	9e	4f	b7	5a	c6	78	a6	12	af	4f
5	61	c3	b4	41	52	7d	8d	08	1f	99	00	19	04	53	f7	e1
6	fd	76	2f	27	60	8b	0e	ab	a2	6e	93	4d	69	7c	09	0a
7	bf	ef	f3	c5	87	14	fe	64	de	2e	4b	1a	06	21	6b	66
8	02	f5	92	8a	0c	b3	7e	d0	7a	47	96	e5	26	80	ad	df
9	a1	30	37	ae	36	15	22	38	f4	a7	45	4c	81	e9	84	97
a	35	c6	ce	3c	71	11	c7	89	75	fb	da	f8	94	59	82	c4
b	ff	49	39	67	c0	cf	d7	b8	0f	8e	42	23	91	6c	db	a4
c	34	f1	48	c2	6f	3d	2d	40	be	3e	bc	c1	aa	ba	4e	55
d	3b	dc	68	7f	9c	d8	4a	56	77	a0	ed	46	b5	2b	65	fa
e	e3	b9	b1	9f	5e	f9	e6	b2	31	ea	6d	5f	e4	f0	cd	88
f	16	3a	58	d4	62	29	07	33	e8	1b	05	79	90	6a	2a	9a

Table 15. S_2 – box

	0	1	2	3	4	5	6	7	8	9	a	b	c	d	e	f
0	38	e8	2d	a6	cf	de	b3	b8	af	60	55	c7	44	6f	6b	5b
1	c3	62	33	b5	29	a0	e2	a7	d3	91	11	06	1c	bc	36	4b
2	ef	88	6c	a8	17	c4	16	f4	c2	45	e1	d6	3f	3d	8e	98
3	28	4e	f6	3e	a5	f9	0d	df	d8	2b	66	7a	27	2f	f1	72
4	42	d4	41	c0	73	67	ac	8b	f7	ad	80	1f	ca	2c	aa	34
5	d2	0b	ee	e9	5d	94	18	f8	57	ae	08	c5	13	cd	86	b9
6	ff	7d	c1	31	f5	8a	6a	b1	d1	20	d7	02	22	04	68	71
7	07	db	9d	99	61	be	e6	59	dd	51	90	dc	9a	a3	ab	d0
8	81	0f	47	1a	e3	ec	8d	bf	96	7b	5c	a2	a1	63	23	4d
9	c8	9e	9c	3a	0c	2e	ba	6e	9f	5a	f2	92	f3	49	78	cc
a	15	fb	70	75	7f	35	10	03	64	6d	c6	74	d5	b4	ea	09
b	76	19	fe	40	12	e0	bd	05	fa	01	f0	2a	5e	a9	56	43
c	85	14	89	9b	b0	e5	48	79	97	fc	1e	82	21	8c	1b	5f
d	77	54	b2	1d	25	4f	00	46	ed	58	52	eb	7e	da	c9	fd
e	30	95	65	3c	b6	e4	bb	7c	0e	50	39	26	32	84	69	93
f	37	e7	24	a4	c6	53	0a	87	d9	4c	83	8f	ce	3b	4a	b7

© ISO/IEC 2005 – All rights reserved
Copyright International Organization for Standardization
Reproduced by IHS under license with ISO
No reproduction or networking permitted without license from IHS
Not for Resale

5.3.4 SEED key schedule

The key schedule generates for each round subkeys. It uses the function G, additions/subtractions, and (left/right) rotations. A 128-bit input key is divided into four 32-bit blocks (a, b, c, d) and the two 32-bit subkeys of the 1st round, $k_{1,0}$ and $k_{1,1}$ are generated as following:

$$k_{1,0} = \mathrm{G}(a + c - KC_0)\ ,\ k_{1,1} = \mathrm{G}(b + KC_0 - d)$$

The two 32-bit subkeys of the 2nd round, $k_{2,0}$ and $k_{2,1}$ are generated from the input key with 8-bit right rotation of the first 64-bits($a \,||\, b$) as follows:

$$a||b \leftarrow (a||b)>>>_8$$
$$k_{2,0} = \mathrm{G}(a + c - KC_1)\ ,\ k_{2,1} = \mathrm{G}(b + KC_1 - d)$$

The two subkeys of the 3rd round, $k_{3,0}$ and $k_{3,1}$ are generated from the 8-bit left rotation of the last 64-bit($c \,||\, d$) as follows:

$$c||d \leftarrow (c||d)<<<_8$$

$$k_{3,0} = \mathrm{G}(a + c - KC_2)\ ,\ k_{3,1} = \mathrm{G}(b + KC_2 - d)$$

The rest of the subkeys are generated iteratively. A pseudo code for the key schedule is as follows:

(1) for i = 1 to 16:

$k_{i,0} = \mathrm{G}(a + c - KC_{i-1})$

$k_{i,1} = \mathrm{G}(b + KC_{i-1} - d)$

i: odd: $a \,||\, b = (a \,||\, b) >>>_8$

i: even: $c \,||\, d = (c \,||\, d) <<<_8$

where the constants KC_i (described in Table 14) are generated from a part of the golden ratio number $\frac{\sqrt{5}-1}{2}$.

Table 14. Constants KC_i (in hexadecimal form)

i	KC_i	i	KC_i
0	9e3779b9	8	3779b99e
1	3c6ef373	9	6ef3733c
2	78dde6e6	10	dde6e678
3	f1bbcdcc	11	bbcdccf1
4	e3779b99	12	779b99e3
5	c6ef3733	13	ef3733c6
6	8dde6e67	14	de6e678d
7	1bbcdccf	15	bcdccf1b

© ISO/IEC 2005 — All rights reserved
Copyright International Organization for Standardization
Reproduced by IHS under license with ISO
No reproduction or networking permitted without license from IHS
Not for Resale

Annex A

(normative)

Description of DES

The DES algorithm is a symmetric block cipher that can process data blocks of 64 bits, using a cipher key with length of 64 bits. Every eighth bit of the cipher key is usually used for parity checking and is ignored.

A.1. DES encryption

The encryption operation is as shown in Figure A.1.

The 64-bit plaintext is first subjected to the initial permutation ***IP***. After the permutation, the block is split into two halves, $\boldsymbol{L_0}$ and $\boldsymbol{R_0}$, each of 32-bits. Then there are 16 rounds of identical operations called function ***f***, in which the data are combined with the key. During each round the right half is input to a keyed function ***f*** which accepts a 32-bit input and a 48-bit subkey $\boldsymbol{K_i}$ and produces a 32-bit output. This output is then XORed with the left half to produce a modified left half. At the end of each round except last round, the left and right halves are swapped to give $\boldsymbol{L_i}$ and $\boldsymbol{R_i}$, respectively. After last round, the left half and the right half are concatenated and the 64-bit block is then subjected to the final permutation $\boldsymbol{IP}^{-1}$ which is the inverse of the initial permutation. The output is the 64-bit ciphertext.

The encryption operation is thus defined as follows (*P* and *C* are data, K_i is a key).

(1) $IP(P) = L_0 \,||\, R_0,$

(2) for i = 1, 2, …, 16:

$$L_i = R_{i-1}$$
$$R_i = L_{i-1} \oplus f(R_{i-1}, K_i)$$

(3) $C = IP^{-1}(R_{16} \,||\, L_{16})$

A.2. DES decryption

The decryption operation is the same as the encryption one. The only difference is that the subkeys $\boldsymbol{K_i}$ must be used in the reverse order.

A.3. DES functions

A.3.1 Initial permutation *IP*

The initial permutation ***IP*** is shown in Table A.1. It accepts a 64-bit input and yields a 64-bit output.
That is the permuted input has bit 58 of the input as its first bit, bit 50 as its second bit, and so on with bit 7 as its last bit.

Table A.1 Initial permutation *IP*

58	50	42	34	26	18	10	2
60	52	44	36	28	20	12	4
62	54	46	38	30	22	14	6
64	56	48	40	32	24	16	8
57	49	41	33	25	17	9	1
59	51	43	35	27	19	11	3
61	53	45	37	29	21	13	5
63	55	47	39	31	23	15	7

© ISO/IEC 2005 – All rights reserved

Copyright International Organization for Standardization
Reproduced by IHS under license with ISO
No reproduction or networking permitted without license from IHS
Not for Resale

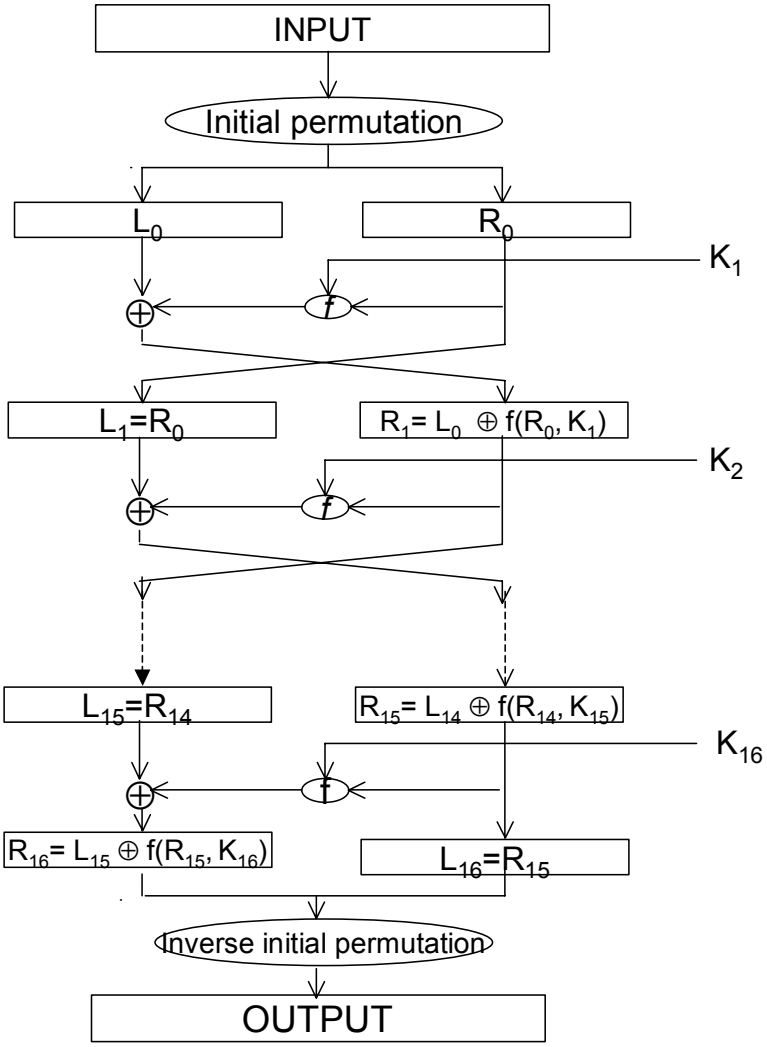

Figure A.1. Encryption procedure

A.3.2 Inverse initial permutation IP^{-1}

The inverse initial permutation IP^{-1} is shown in Table A.2. It also accepts a 64-bit input and yields a 64-bit output. The output of the algorithm has bit 40 of the preoutput block as its first bit, bit 8 as its second bit, and so on, until bit 25 of the preoutput block is the last bit of the output.

Table A.2. Inverse initial permutation IP^{-1}

40	8	48	16	56	24	64	32
39	7	47	15	55	23	63	31
38	6	46	14	54	22	62	30
37	5	45	13	53	21	61	29
36	4	44	12	52	20	60	28
35	3	43	11	51	19	59	27
34	2	42	10	50	18	58	26
33	1	41	9	49	17	57	25

© ISO/IEC 2005 — All rights reserved
Copyright International Organization for Standardization
Reproduced by IHS under license with ISO
No reproduction or networking permitted without license from IHS
Not for Resale

A.3.3 Function *f*

The function ***f*** is shown in Figure A.2.

It takes a 32-bit input *R* and expands this to a 48-bit *R*' by using the expansion permutation ***E***. The 48-bit *R*' is XORed with a 48-bit subkey *K* and the computed 48-bit data, written as 8 blocks of 6 bits each, are obtained by selecting the bits in its inputs in order according to the table. Each of the unique selection functions, called S-Boxes, $\boldsymbol{S_1, S_2, \ldots, S_8}$, takes a 6-bit block r_i as input and yields a 4-bit block $S_i(r_i)$ as output. The permutation function ***P*** yields a 32-bit output *R*'''' from a 32-bit input *R*''' by permuting the bits of the input block. *R*'''' is the output of the function ***f***.

The function ***f*** is thus defined as follows (*P* and *C* are data, K_i is a key).

(1) $R' = E(R)$

(2) $R'' = R' \oplus K$

(3) $R'' = r_1 \| r_2 \| r_3 \| r_4 \| r_5 \| r_6 \| r_7 \| r_8$

$$R''' = S_1(r_1) \| S_2(r_2) \| S_3(r_3) \| S_4(r_4) \| S_5(r_5) \| S_6(r_6) \| S_7(r_7) \| S_8(r_8)$$

(4) $R'''' = P(R''')$

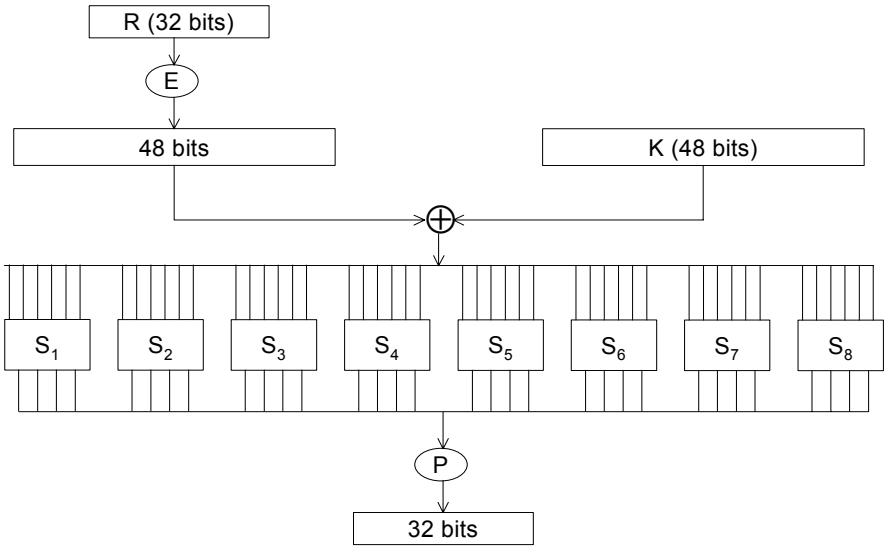

Figure A.2. Calculation of *f*(R, K)

A.3.4 Expansion permutation *E*

The expansion permutation ***E*** is shown in Table A.3. It accepts a 32-bit input and yields a 48-bit output. The first three bits of ***E*** are the bits in positions 32, 1 and 2 while the last 2 bits are the bits in positions 32 and 1.

Table A.3. Expansion permutation *E*

32	1	2	3	4	5
4	5	6	7	8	9
8	9	10	11	12	13
12	13	14	15	16	17
16	17	18	19	20	21
20	21	22	23	24	25
24	25	26	27	28	29
28	29	30	31	32	1

© ISO/IEC 2005 – All rights reserved
Copyright International Organization for Standardization
Reproduced by IHS under license with ISO
No reproduction or networking permitted without license from IHS
Not for Resale

A.3.5 Permutation *P*

The permutation function ***P*** is shown in table A.4. It accepts a 32-bit input and yields a 32-bit output. The output ***P(L)*** for the function ***P*** defined by this table is obtained from the input ***L*** by taking the 16th bit of ***L*** as the first bit of ***P(L***), the 7th bit as the second bit of ***P(L***), and so on until the 25th bit of ***L*** is taken as the 32nd bit of ***P(L***).

Table A.4 Permutation *P*

16	7	20	21
29	12	28	17
1	15	23	26
5	18	31	10
2	8	24	14
32	27	3	9
19	13	30	6
22	11	4	25

A.3.6 S-Boxes

The S-Boxes are shown in Table A.5. Each of them accepts a 6-bit input and yields a 4-bit output.

If S_1 is the function defined in the table and ***B*** is a block of 6 bits, then $S_1(B)$ is determined as follows: The first and last bits of ***B*** represent in base 2 a number in the range 0 to 3. Let that number be *i*. The middle 4 bits of ***B*** represent in base 2 a number in the range 0 to 15. Let that number be j. Look up in the table the number in the *i*'th row and *j*'th column. It is a number in the range 0 to 15 and is uniquely represented by a 4 bit block. That block is the output $S_1(B)$ of S_1 for the input ***B***. For example, for input `011011` the row is `01`, that is row 1, and the column is determined by `1101`, that is column 13. In row 1 column 13 appears 5 so that the output is `0101`. Other S-Boxes follow the same rule above.

Table A.5. S-Boxes

S_1

14	4	13	1	2	15	11	8	3	10	6	12	5	9	0	7
0	15	7	4	14	2	13	1	10	6	12	11	9	5	3	8
4	1	14	8	13	6	2	11	15	12	9	7	3	10	5	0
15	12	8	2	4	9	1	7	5	11	3	14	10	0	6	13

S_2

15	1	8	14	6	11	3	4	9	7	2	13	12	0	5	10
3	13	4	7	15	2	8	14	12	0	1	10	6	9	11	5
0	14	7	11	10	4	13	1	5	8	12	6	9	3	2	15
13	8	10	1	3	15	4	2	11	6	7	12	0	5	14	9

S_3

10	0	9	14	6	3	15	5	1	13	12	7	11	4	2	8
13	7	0	9	3	4	6	10	2	8	5	14	12	11	15	1
13	6	4	9	8	15	3	0	11	1	2	12	5	10	14	7
1	10	13	0	6	9	8	7	4	15	14	3	11	5	2	12

S_4

7	13	14	3	0	6	9	10	1	2	8	5	11	12	4	15
13	8	11	5	6	15	0	3	4	7	2	12	1	10	14	9
10	6	9	0	12	11	7	13	15	1	3	14	5	2	8	4
3	15	0	6	10	1	13	8	9	4	5	11	12	7	2	14

© ISO/IEC 2005 — All rights reserved
Copyright International Organization for Standardization
Reproduced by IHS under license with ISO
No reproduction or networking permitted without license from IHS
Not for Resale

S_5

2	12	4	1	7	10	11	6	8	5	3	15	13	0	14	9
14	11	2	12	4	7	13	1	5	0	15	10	3	9	8	6
4	2	1	11	10	13	7	8	15	9	12	5	6	3	0	14
11	8	12	7	1	14	2	13	6	15	0	9	10	4	5	3

S_6

12	1	10	15	9	2	6	8	0	13	3	4	14	7	5	11
10	15	4	2	7	12	9	5	6	1	13	14	0	11	3	8
9	14	15	5	2	8	12	3	7	0	4	10	1	13	11	6
4	3	2	12	9	5	15	10	11	14	1	7	6	0	8	13

S_7

4	11	2	14	15	0	8	13	3	12	9	7	5	10	6	1
13	0	11	7	4	9	1	10	14	3	5	12	2	15	8	6
1	4	11	13	12	3	7	14	10	15	6	8	0	5	9	2
6	11	13	8	1	4	10	7	9	5	0	15	14	2	3	12

S_8

13	2	8	4	6	15	11	1	10	9	3	14	5	0	12	7
1	15	13	8	10	3	7	4	12	5	6	11	0	14	9	2
7	11	4	1	9	12	14	2	0	6	10	13	15	3	5	8
2	1	14	7	4	10	8	13	15	12	9	0	3	5	6	11

A.4 DES key schedule (*KS*)

The key scheduling part is shown in Figure A.3. It accepts a 64-bit key ***KEY*** and yields sixteen 48-bit subkeys $K_1, K_2, \ldots, K_{16}$.

Recall that K_n, for $1 \le n \le 16$, is the block of 48 bits in (2) of the algorithm in A.1. Hence, to describe ***KS***, it is sufficient to describe the calculation of K_n from ***KEY*** for n = 1, 2,..., 16. That calculation is illustrated in Figure A.3. To complete the definition of ***KS*** it is therefore sufficient to describe the two permuted choices, as well as the schedule of left shifts. One bit in each 8-bit byte of the ***KEY*** may be utilized for error detection in key generation, distribution and storage. Bits 8, 16,..., 64 are for use in assuring that each byte is of odd parity. Permuted choice 1 is determined by the following table:

Table A.6. Key permutation *PC-1*

57	49	41	33	25	17	9
1	58	50	42	34	26	18
10	2	59	51	43	35	27
19	11	3	60	52	44	36
63	55	47	39	31	23	15
7	62	54	46	38	30	22
14	6	61	53	45	37	29
21	13	5	28	20	12	4

The table has been divided into two parts, with the first part determining how the bits of C_0 are chosen, and the second part determining how the bits of D_0 are chosen. The bits of ***KEY*** are numbered 1 through 64. The bits of C_0 are respectively bits 57, 49, 41,..., 44 and 36 of ***KEY***, with the bits of D_0 being bits 63, 55, 47,..., 12 and 4 of ***KEY***. With C_0 and D_0 defined, we now define how the blocks C_n and D_n are obtained from the blocks C_{n-1} and D_{n-1}, respectively, for n = 1, 2,..., 16. That is accomplished by adhering to the following schedule of left shifts of the individual blocks:

© ISO/IEC 2005 – All rights reserved
Copyright International Organization for Standardization
Reproduced by IHS under license with ISO
No reproduction or networking permitted without license from IHS
Not for Resale

Table A.7. Number of key bits shifted per round

Iteration Number	Number of Left Shifts
1	1
2	1
3	2
4	2
5	2
6	2
7	2
8	2
9	1
10	2
11	2
12	2
13	2
14	2
15	2
16	1

For example, C_3 and D_3 are obtained from C_2 and D_2, respectively, by two left shifts, and C_{16} and D_{16} are obtained from C_{15} and D_{15}, respectively, by one left shift. In all cases, by a single left shift is meant a rotation of the bits one place to the left, so that after one left shift the bits in the 28 positions are the bits that were previously in positions 2, 3,..., 28, 1. Permuted choice 2 is determined by the following table:

Table A.8 Compression permutation *PC-2*

14	17	11	24	1	5
3	28	15	6	21	10
23	19	12	4	26	8
16	7	27	20	13	2
41	52	31	37	47	55
30	40	51	45	33	48
44	49	39	56	34	53
46	42	50	36	29	32

Therefore, the first bit of K_n is the 14th bit of C_nD_n, the second bit the 17th, and so on with the 47th bit the 29th, and the 48th bit the 32nd.

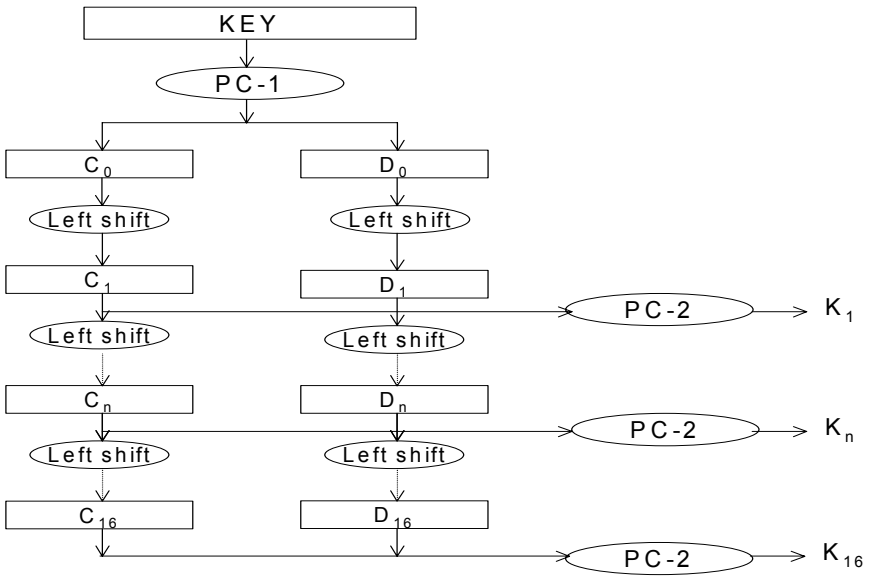

Figure A.3. Key schedule calculation

© ISO/IEC 2005 — All rights reserved
Copyright International Organization for Standardization
Reproduced by IHS under license with ISO
No reproduction or networking permitted without license from IHS
Not for Resale

Annex B

(normative)

ASN.1 module

This annex lists the object identifiers assigned to algorithms specified in this part of ISO/IEC18033.

NOTE – In applications where a combination of algorithms is used to provide security services or when an algorithm is parameterised by the choice of a combination of other algorithms such a combination may be specified as a sequence of object identifiers assigned to these algorithms or by including the object identifiers of lower layer algorithms. The algorithm identifier structure is defied in ISO/IEC 9594-8.

```
--
-- ISO/IEC 18033-3 ASN.1 Module
--

EncryptionAlgorithms-3 {
    iso(1) standard(0) encryption-algorithms(18033) part(3)
        asn1-module(0) algorithm-object-identifiers(0) }
    DEFINITIONS EXPLICIT TAGS ::= BEGIN

-- EXPORTS All; --

-- IMPORTS None; --

OID ::= OBJECT IDENTIFIER – Alias

-- Synonyms --
is18033-3  OID ::= { iso(1) standard(0) is18033(18033) part3(3) }

id-bc64   OID ::= { is18033-3 cipher-64-bit(1)  }
id-bc128  OID ::= { is18033-3 cipher-128-bit(2) }

-- Assignments --

id-bc64-tdea        OID ::= {id-bc64 tdea(1)      }
id-bc64-misty1      OID ::= {id-bc64 misty1(2)    }
id-bc64-cast128     OID ::= {id-bc64 cast128(3)   }
id-bc128-aes        OID ::= {id-bc128 aes(1)      }
id-bc128-camellia   OID ::= {id-bc128 camellia(2) }
id-bc128-seed       OID ::= {id-bc128 seed(3)     }

EncryptionAlgorithmIdentifier ::= SEQUENCE {
    Algorithm     ALGORITHM.&id({BlockAlgorithms}),
    parameters    ALGORITHM.&Type({BlockAlgorithms}{@algorithm}) OPTIONAL
}

BlockAlgorithms ALGORITHM ::= {

     { OID id-bc64-tdea        PARMS KeyLengthID } |
     { OID id-bc64-misty1      PARMS KeyLength   } |
     { OID id-bc64-cast128     PARMS KeyLength   } |
```

© ISO/IEC 2005 – All rights reserved
Copyright International Organization for Standardization
Reproduced by IHS under license with ISO
No reproduction or networking permitted without license from IHS
Not for Resale

```
    { OID id-bc128-aes        PARMS KeyLengthID } |
    { OID id-bc128-camellia   PARMS KeyLengthID } |
    { OID id-bc128-seed       PARMS KeyLength   },

   ...   -- Except additional algorithms --
}

KeyLength ::= INTEGER

KeyLengthID ::= CHOICE {
   int    KeyLength,
   oid    OID
}

-- Cryptographic algorithm identification --

ALGORITHM ::= CLASS {
   &id    OBJECT IDENTIFIER   UNIQUE,
   &Type  OPTIONAL
}
   WITH SYNTAX {OID &id [PARMS &TYPE] }

END  -- EncryptionAlgorithms-3 --
```


Copyright International Organization for Standardization
Reproduced by IHS under license with ISO
No reproduction or networking permitted without license from IHS
Not for Resale
© ISO/IEC 2005 — All rights reserved

Annex C

(informative)

Algebraic forms of MISTY1 and Camellia S-boxes

In MISTY1 and Camellia algorithms, S-boxes can be described by the following algebraic forms respectively.

C.1 MISTY1 S-boxes

This clause describes the algebraic forms over GF(2) of S_7 and S_9 in the MISTY1 algorithm.

For example, if the input to S_7 is {53}, then $X = (x_6, x_5, x_4, x_3, x_2, x_1, x_0) = (1, 0, 1, 0, 0, 1, 1)$. The substitution value would be derived by the algebraic form in Figure B.1 and $Y = (y_6, y_5, y_4, y_3, y_2, y_1, y_0) = (1, 0, 1, 0, 1, 1, 1)$. This would result in S_7 having a value of {57}.

C.1.1 MISTY1 S-box S_7

$y_0 = x_0 \oplus x_1 x_3 \oplus x_0 x_3 x_4 \oplus x_1 x_5 \oplus x_0 x_2 x_5 \oplus x_4 x_5 \oplus x_0 x_1 x_6 \oplus x_2 x_6 \oplus x_0 x_5 x_6 \oplus x_3 x_5 x_6 \oplus 1$
$y_1 = x_0 x_2 \oplus x_0 x_4 \oplus x_3 x_4 \oplus x_1 x_5 \oplus x_2 x_4 x_5 \oplus x_6 \oplus x_0 x_6 \oplus x_3 x_6 \oplus x_2 x_3 x_6 \oplus x_1 x_4 x_6 \oplus x_0 x_5 x_6 \oplus 1$
$y_2 = x_1 x_2 \oplus x_0 x_2 x_3 \oplus x_4 \oplus x_1 x_4 \oplus x_0 x_1 x_4 \oplus x_0 x_5 \oplus x_0 x_4 x_5 \oplus x_3 x_4 x_5 \oplus x_1 x_6 \oplus x_3 x_6 \oplus x_0 x_3 x_6 \oplus x_4 x_6 \oplus x_2 x_4 x_6$
$y_3 = x_0 \oplus x_1 \oplus x_0 x_1 x_2 \oplus x_0 x_3 \oplus x_2 x_4 \oplus x_1 x_4 x_5 \oplus x_2 x_6 \oplus x_1 x_3 x_6 \oplus x_0 x_4 x_6 \oplus x_5 x_6 \oplus 1$
$y_4 = x_2 x_3 \oplus x_0 x_4 \oplus x_1 x_3 x_4 \oplus x_5 \oplus x_2 x_5 \oplus x_1 x_2 x_5 \oplus x_0 x_3 x_5 \oplus x_1 x_6 \oplus x_1 x_5 x_6 \oplus x_4 x_5 x_6 \oplus 1$
$y_5 = x_0 \oplus x_1 \oplus x_2 \oplus x_0 x_1 x_2 \oplus x_0 x_3 \oplus x_1 x_2 x_3 \oplus x_1 x_4 \oplus x_0 x_2 x_4 \oplus x_0 x_5 \oplus x_0 x_1 x_5 \oplus x_3 x_5 \oplus x_0 x_6 \oplus x_2 x_5 x_6$
$y_6 = x_0 x_1 \oplus x_3 \oplus x_0 x_3 \oplus x_2 x_3 x_4 \oplus x_0 x_5 \oplus x_2 x_5 \oplus x_3 x_5 \oplus x_1 x_3 x_5 \oplus x_1 x_6 \oplus x_1 x_2 x_6 \oplus x_0 x_3 x_6 \oplus x_4 x_6 \oplus x_2 x_5 x_6$

Figure B.1. Algebraic Form of S_7 ($y_6 2^6 \oplus y_5 2^5 \oplus \ldots \oplus y_1 2^1 \oplus y_0 2^0 = S_7(x_6 2^6 \oplus x_5 2^5 \oplus \ldots \oplus x_1 2^1 \oplus x_0 2^0)$)

C.1.2 MISTY1 S-box S_9

$y_0 = x_0 x_4 \oplus x_0 x_5 \oplus x_1 x_5 \oplus x_1 x_6 \oplus x_2 x_6 \oplus x_2 x_7 \oplus x_3 x_7 \oplus x_3 x_8 \oplus x_4 x_8 \oplus 1$
$y_1 = x_0 x_2 \oplus x_3 \oplus x_1 x_3 \oplus x_2 x_3 \oplus x_3 x_4 \oplus x_4 x_5 \oplus x_0 x_6 \oplus x_2 x_6 \oplus x_7 \oplus x_0 x_8 \oplus x_3 x_8 \oplus x_5 x_8 \oplus 1$
$y_2 = x_0 x_1 \oplus x_1 x_3 \oplus x_4 \oplus x_0 x_4 \oplus x_2 x_4 \oplus x_3 x_4 \oplus x_4 x_5 \oplus x_0 x_6 \oplus x_5 x_6 \oplus x_1 x_7 \oplus x_3 x_7 \oplus x_8$
$y_3 = x_0 \oplus x_1 x_2 \oplus x_2 x_4 \oplus x_5 \oplus x_1 x_5 \oplus x_3 x_5 \oplus x_4 x_5 \oplus x_5 x_6 \oplus x_1 x_7 \oplus x_6 x_7 \oplus x_2 x_8 \oplus x_4 x_8$
$y_4 = x_1 \oplus x_0 x_3 \oplus x_2 x_3 \oplus x_0 x_5 \oplus x_3 x_5 \oplus x_6 \oplus x_2 x_6 \oplus x_4 x_6 \oplus x_5 x_6 \oplus x_6 x_7 \oplus x_2 x_8 \oplus x_7 x_8$
$y_5 = x_2 \oplus x_0 x_3 \oplus x_1 x_4 \oplus x_3 x_4 \oplus x_1 x_6 \oplus x_4 x_6 \oplus x_7 \oplus x_3 x_7 \oplus x_5 x_7 \oplus x_6 x_7 \oplus x_0 x_8 \oplus x_7 x_8$
$y_6 = x_0 x_1 \oplus x_3 \oplus x_1 x_4 \oplus x_2 x_5 \oplus x_4 x_5 \oplus x_2 x_7 \oplus x_5 x_7 \oplus x_8 \oplus x_0 x_8 \oplus x_4 x_8 \oplus x_6 x_8 \oplus x_7 x_8 \oplus 1$
$y_7 = x_1 \oplus x_0 x_1 \oplus x_1 x_2 \oplus x_2 x_3 \oplus x_0 x_4 \oplus x_5 \oplus x_1 x_6 \oplus x_3 x_6 \oplus x_0 x_7 \oplus x_4 x_7 \oplus x_6 x_7 \oplus x_1 x_8 \oplus 1$
$y_8 = x_0 \oplus x_0 x_1 \oplus x_1 x_2 \oplus x_4 \oplus x_0 x_5 \oplus x_2 x_5 \oplus x_3 x_6 \oplus x_5 x_6 \oplus x_0 x_7 \oplus x_0 x_8 \oplus x_3 x_8 \oplus x_6 x_8 \oplus 1$

Figure B.2. Algebraic Form of S_9 ($y_8 2^8 \oplus y_7 2^7 \oplus \ldots \oplus y_1 2^1 \oplus y_0 2^0 = S_9(x_8 2^8 \oplus x_7 2^7 \oplus \ldots \oplus x_1 2^1 \oplus x_0 2^0)$)

C.2 Camellia S-box

This clause describes the algebraic forms over GF(2^8) of S-box in the Camellia algorithm.

s_1 is given as follows (the input is x and the output is y):

$$s_1: \quad y = \mathbf{h}(\mathbf{g}(\mathbf{f}(c5 \oplus x))) \oplus 6e$$

where operations **f**, **g** and **h** take 8-bit inputs $a = a_1 \| a_2 \| a_3 \| a_4 \| a_5 \| a_6 \| a_7 \| a_8$ and output 8-bit values $b = b_1 \| b_2 \| b_3 \| b_4 \| b_5 \| b_6 \| b_7 \| b_8$, where the a_i and b_i are 1-bit values. **f** is an affine permutation of the input, **g** is inversion over GF(2^8), and **h** is an affine transformation of the output.

© ISO/IEC 2005 – All rights reserved
Copyright International Organization for Standardization
Reproduced by IHS under license with ISO
No reproduction or networking permitted without license from IHS
Not for Resale

In the above equation, operations **f**, **g** and **h** are described in the following algebraic forms.

f :

$$
\begin{aligned}
b_1 &= a_6 \oplus a_2, & b_5 &= a_7 \oplus a_4,\\
b_2 &= a_7 \oplus a_1, & b_6 &= a_5 \oplus a_2,\\
b_3 &= a_8 \oplus a_5 \oplus a_3, & b_7 &= a_8 \oplus a_1,\\
b_4 &= a_8 \oplus a_3, & b_8 &= a_6 \oplus a_4.
\end{aligned}
$$

g :

$$
\begin{aligned}
&\left(b_8 + b_7\alpha + b_6\alpha^2 + b_5\alpha^3\right) + \left(b_4 + b_3\alpha + b_2\alpha^2 + b_1\alpha^3\right)\beta\\
&= 1/\left(\left(a_8 + a_7\alpha + a_6\alpha^2 + a_5\alpha^3\right) + \left(a_4 + a_3\alpha + a_2\alpha^2 + a_1\alpha^3\right)\beta\right).
\end{aligned}
$$

g is an inversion performed in GF(2^8) assuming $\frac{1}{0} = 0$, where β is an element in GF(2^8) that satisfies $\beta^8 + \beta^6 + \beta^5 + \beta^3 + 1 = 0$, and $\alpha = \beta^{238} = \beta^6 + \beta^5 + \beta^3 + \beta^2$ is an element in GF(2^4) that satisfies $\alpha^4 + \alpha + 1 = 0.$

h :

$$
\begin{aligned}
b_1 &= a_5 \oplus a_6 \oplus a_2, & b_5 &= a_7 \oplus a_3,\\
b_2 &= a_6 \oplus a_2, & b_6 &= a_8 \oplus a_1,\\
b_3 &= a_7 \oplus a_4, & b_7 &= a_5 \oplus a_1,\\
b_4 &= a_8 \oplus a_2, & b_8 &= a_6 \oplus a_3.
\end{aligned}
$$

--`,,```,,,-`-`,,`,,`,`,,`---
© ISO/IEC 2005 — All rights reserved
Copyright International Organization for Standardization
Reproduced by IHS under license with ISO
No reproduction or networking permitted without license from IHS
Not for Resale

Annex D
(informative)

Test vectors

This annex provides test vectors for TDEA, MISTY1, CAST-128, AES, Camellia and SEED ciphers. In these examples, all data are expressed in hexadecimal.

D.1 TDEA test vectors

D.1.1 TDEA encryption

Given inputs (plaintext and keys), output (ciphertext) is described.

		Input	Output
1	Key	K_1 = 0123456789abcdef K_2 = 23456789abcdef01 K_3 = 456789abcdef0123	-
	Encryption	P = 4e6f772069732074	C = 314f8327fa7a09a8
2	Key	K_1 = 0123456789abcdef K_2 = 23456789abcdef01 K_3 = 456789abcdef0123	-
	Encryption	P = 68652074696d6520	C = 4362760cc13ba7da
3	Key	K_1 = 0123456789abcdef K_2 = 23456789abcdef01 K_3 = 456789abcdef0123	-
	Encryption	P = 666f7220616c6c20	C = ff55c5f80faaac45
4	Key	K_1 = 0123456789abcdef K_2 = 23456789abcdef01 K_3 = 0123456789abcdef	-
	Encryption	P = 4e6f772069732074	C = 03e69f5bfa58eb42

© ISO/IEC 2005 – All rights reserved
Copyright International Organization for Standardization
Reproduced by IHS under license with ISO
No reproduction or networking permitted without license from IHS
Not for Resale

5	Key	K_1 = 02c4da3d73f226ad K_2 = 1cbce0f2bacd3b15 K_3 = 02c4da3d73f226ad	-
	Encryption	P = 03e69f5bfa58eb42	C = 262a60f9743e1fd8
6	Key	K_1 = 0123456789abcdef K_2 = 23456789abcdef01 K_3 = 0123456789abcdef	-
	Encryption	P = 6996c8fa47a2abeb	C = 4e6f772069732074
7	Key	K_1 = 68b58c9dce086704 K_2 = 529dce3719e9e0da K_3 = 68b58c9dce086074	-
	Encryption	P = 6b177e016e6ae12d	C = 6996c8fa47a2abeb

D.1.2 DES encryption and decryption

Inputs and outputs on each DES algorithm are described, where keys are as follows:

K_1 = 0123456789abcdef;

K_2 = 23456789abcdef01;

K_3 = 456789abcdef0123.

D.1.2.1 TDEA encryption (DES encryption-decryption-encryption)

	Input	Output
DES_1 - E_{K1}	4e6f772069732074	3fa40e8a984d4815
DES_2 - D_{K2}	3fa40e8a984d4815	0663d1b37c48090c
DES_3 - E_{K3}	0663d1b37c48090c	314f8327fa7a09a8

	Input	Output
DES_1 – E_{K1}	68652074696d6520	6a271787ab8883f9
DES_2 – D_{K2}	6a271787ab8883f9	95cae06a9ff4d6d2
DES_3 – E_{K3}	95cae06a9ff4d6d2	4362760cc13ba7da

--`,,``,,-`-`,,`,,`,`,,`---
© ISO/IEC 2005 — All rights reserved
Copyright International Organization for Standardization
Reproduced by IHS under license with ISO
No reproduction or networking permitted without license from IHS
Not for Resale

	Input	Output
$DES_1 – E_{K1}$	666f7220616c6c20	893d51ec4b563b53
$DES_2 – D_{K2}$	893d51ec4b563b53	5fed3eb05419f67c
$DES_3 – E_{K3}$	5fed3eb05419f67c	ff55c5f80faaac45

D.1.2.2 TDEA decryption (DES decryption-encryption-decryption)

	Input	Output
$DES_1 – D_{K3}$	314f8327fa7a09a8	0663d1b37c48090c
$DES_2 – E_{K2}$	0663d1b37c48090c	3fa40e8a984d4815
$DES_1 – D_{K1}$	3fa40e8a984d4815	4e6f772069732074

	Input	Output
$DES_1 – D_{K3}$	4362760cc13ba7da	95cae06a9ff4d6d2
$DES_2 – E_{K2}$	95cae06a9ff4d6d2	6a271787ab8883f9
$DES_1 – D_{K1}$	6a271787ab8883f9	68652074696d6520

	Input	Output
$DES_1 – D_{K3}$	ff55c5f80faaac45	5fed3eb05419f67c
$DES_2 – E_{K2}$	5fed3eb05419f67c	893d51ec4b563b53
$DES_3 – D_{K1}$	893d51ec4b563b53	666f7220616c6c20

D.2 MISTY1 test vectors

Given inputs (plaintext and key), output (ciphertext and subkey) is described.

		Input	Output
1	Key	K = 00112233445566778899aabbccddeeff	K' = cf518e7f5e29673acdbc07d6bf355e11
	Encryption	P = 0123456789abcdef	C = 8b1da5f56ab3d07c
	Key	K = 414afd99bb577ee69df58cc8fb4e6888	K' = c7bd6e012268237a4389305a1b360b8c

--`,,```,,-`-`,,`,,`,`,,`---
© ISO/IEC 2005 – All rights reserved
Copyright International Organization for Standardization
Reproduced by IHS under license with ISO
No reproduction or networking permitted without license from IHS
Not for Resale

2	Encryption	*P* = 9fc302e281310e90	*C* = 15c270974b9b9163
3	Key	*K* = 3c54aed9a5389c947167db9d97c6967a	*K′* = 7c8e13ebfe7648050c9097934205662b
	Encryption	*P* = 032c4a4a100ee807	*C* = 3346cb8c779cf2de
4	Key	*K* = d3f11a6d25f1b3866fdada0b5e53fa17	*K′* = f011d035ac920f832f69bcf7b860d4f0
	Encryption	*P* = db9e3218402023f3	*C* = b2dd1595a450bc98
5	Key	*K* = 5f87f88ec7641d83af03fd8327821046	*K′* = 3736172d7421c91401596db29d3d5536
	Encryption	*P* = 6553de24c0dd900b	*C* = 60081e65cb7c2b84

D.3 CAST-128 test vectors

Given inputs (plaintext and key), output (ciphertext) is described.

		Input	Output
1	Key	*K* = 01234567123456782345678934567 89a	
	Encryption	*P* = 0123456789abcdef	*C* = 238b4fe5847e44b2

D.4 AES test vectors

D.4.1 AES encryption

Given inputs (plaintext and key), output (ciphertext) is described.

D.4.1.1 128-bit key

		Input	Output
1	Key	*K* = 000102030405060708090a0b0c0d0e0f	
	Encryption	*P* = 00112233445566778899aabbccddeeff	*C* = 69c4e0d86a7b0430d8cdb78070b4c55a

--`,,``,,-`-`,,`,,`,`,,`---
© ISO/IEC 2005 — All rights reserved
Copyright International Organization for Standardization
Reproduced by IHS under license with ISO
No reproduction or networking permitted without license from IHS
Not for Resale

D.4.1.2 192-bit key

		Input	Output
1	Key	*K* = 000102030405060708090a0b0c0d0e0f 1011121314151617	
	Encryption	*P* = 00112233445566778899aabbccddeeff	*C* = dda97ca4864cdfe06eaf70a0ec0d7191

D.4.1.3 256-bit key

		Input	Output
1	Key	*K* = 000102030405060708090a0b0c0d0e0f 101112131415161718191a1b1c1d1e1f	
	Encryption	*P* = 00112233445566778899aabbccddeeff	*C* = 8ea2b7ca516745bfeafc49904b496089

D.4.2 Key expansion example

This sub clause shows the development of the key schedule using

Cipher Key = 2b 7e 15 16 28 ae d2 a6 ab f7 15 88 09 cf 4f 3c

for ***Nk*** = 4, which results in

w_0 = **2b7e1516** w_1 = **28aed2a6** w_2 = **abf71588** w_3 = **09cf4f3c**

The intermediate values produced during the development of the key schedule are given in the following table (all values are in hexadecimal format, with the exception of the index column (i)).

I (dec)	**temp**	**After RotWord()**	**After SubByte()**	**Rcon[i/Nk]**	**After XOR with Rcon**	**w[i-Nk]**	**w[i] = temp XOR w[i-Nk]**
4	09cf4f3c	cf4f3c09	8a84eb01	01000000	8b84eb01	2b7e1516	a0fafe17
5	a0fafe17					28aed2a6	88542cb1
6	88542cb1					abf71588	23a33939
7	23a33939					09cf4f3c	2a6c7605
8	2a6c7605	6c76052a	50386be5	02000000	52386be5	a0fafe17	f2c295f2
9	f2c295f2					88542cb1	7a96b943
10	7a96b943					23a33939	5935807a
11	5935807a					2a6c7605	7359f67f

--`,,```,,-`-`,,`,,`,`,,`---

© ISO/IEC 2005 – All rights reserved

Copyright International Organization for Standardization
Reproduced by IHS under license with ISO
No reproduction or networking permitted without license from IHS
Not for Resale

12	7359f67f	59f67f73	cb42d28f	04000000	cf42d28f	f2c295f2	3d80477d
13	3d80477d					7a96b943	4716fe3e
14	4716fe3e					5935807a	1e237e44
15	1e237e44					7359f67f	6d7a883b
16	6d7a883b	7a883b6d	dac4e23c	08000000	d2c4e23c	3d80477d	ef44a541
17	ef44a541					4716fe3e	a8525b7f
18	a8525b7f					1e237e44	b671253b
19	b671253b					6d7a883b	db0bad00
20	db0bad00	0bad00db	2b9563b9	10000000	3b9563b9	ef44a541	d4d1c6f8
21	d4d1c6f8					a8525b7f	7c839d87
22	7c839d87					b671253b	caf2b8bc
23	caf2b8bc					db0bad00	11f915bc
24	11f915bc	f915bc11	99596582	20000000	b9596582	d4d1c6f8	6d88a37a
25	6d88a37a					7c839d87	110b3efd
26	110b3efd					caf2b8bc	dbf98641
27	dbf98641					11f915bc	ca0093fd
28	ca0093fd	0093fdca	63dc5474	40000000	23dc5474	6d88a37a	4e54f70e
29	4e54f70e					110b3efd	5f5fc9f3
30	5f5fc9f3					dbf98641	84a64fb2
31	84a64fb2					ca0093fd	4ea6dc4f
32	4ea6dc4f	a6dc4f4e	2486842f	80000000	a486842f	4e54f70e	ead27321
33	ead27321					5f5fc9f3	b58dbad2
34	b58dbad2					84a64fb2	312bf560
35	312bf560					4ea6dc4f	7f8d292f
36	7f8d292f	8d292f7f	5da515d2	1b000000	46a515d2	ead27321	ac7766f3
37	ac7766f3					b58dbad2	19fadc21
38	19fadc21					312bf560	28d12941
39	28d12941					7f8d292f	575c006e

--`,,``,,-`-`,,`,,`,`,,`---
© ISO/IEC 2005 — All rights reserved
Copyright International Organization for Standardization
Reproduced by IHS under license with ISO
No reproduction or networking permitted without license from IHS
Not for Resale

40	575c006e	5c006e57	4a639f5b	36000000	7c639f5b	ac7766f3	d014f9a8
41	d014f9a8					19fadc21	c9ee2589
42	c9ee2589					28d12941	e13f0cc8
43	e13f0cc8					575c006e	b6630ca6

D.4.3 Cipher example

The following diagram shows the values in the State array as the Cipher progresses for a block length and a Cipher Key length of 16 bytes each.

```
Input =      32 43 f6 a8 88 5a 30 8d 31 31 98 a2 e0 37 07 34
Cipher Key = 2b 7e 15 16 28 ae d2 a6 ab f7 15 88 09 cf 4f 3c
```

The Round Key values are taken from the Key expansion example in D.4.2.

Round Number	Start of Round	After SubBytes	After ShiftRows	After MixColumns	Round Key Value
input	32 88 31 e0 43 5a 31 37 f6 30 98 07 a8 8d a2 34				⊕ 2b 28 ab 09 7e ae f7 cf 15 d2 15 4f 16 a6 88 3c =
1	19 a0 9a e9 3d f4 c6 f8 e3 e2 8d 48 be 2b 2a 08	d4 e0 b8 1e 27 bf b4 41 11 98 5d 52 ae f1 e5 30	d4 e0 b8 1e bf b4 41 27 5d 52 11 98 30 ae f1 e5	04 e0 48 28 66 cb f8 06 81 19 d3 26 e5 9a 7a 4c	⊕ a0 88 23 2a fa 54 a3 6c fe 2c 39 76 17 b1 39 05 =
2	a4 68 6b 02 9c 9f 5b 6a 7f 35 ea 50 f2 2b 43 49	49 45 7f 77 de db 39 02 d2 96 87 53 89 f1 1a 3b	49 45 7f 77 db 39 02 de 87 53 d2 96 3b 89 f1 1a	58 1b db 1b 4d 4b e7 6b ca 5a ca b0 f1 ac a8 e5	⊕ f2 7a 59 73 c2 96 35 59 95 b9 80 f6 f2 43 7a 7f =
3	aa 61 82 68 8f dd D2 32 5f e3 4a 46 03 ef d2 9a	ac ef 13 45 73 c1 b5 23 cf 11 d6 5a 7b df b5 b8	ac ef 13 45 c1 b5 23 73 d6 5a cf 11 b8 7b df b5	75 20 53 bb ec 0b c0 25 09 63 cf d0 93 33 7c dc	⊕ 3d 47 1e 6d 80 16 23 7a 47 fe 7e 88 7d 3e 44 3b =

© ISO/IEC 2005 – All rights reserved
Copyright International Organization for Standardization
Reproduced by IHS under license with ISO
No reproduction or networking permitted without license from IHS
Not for Resale

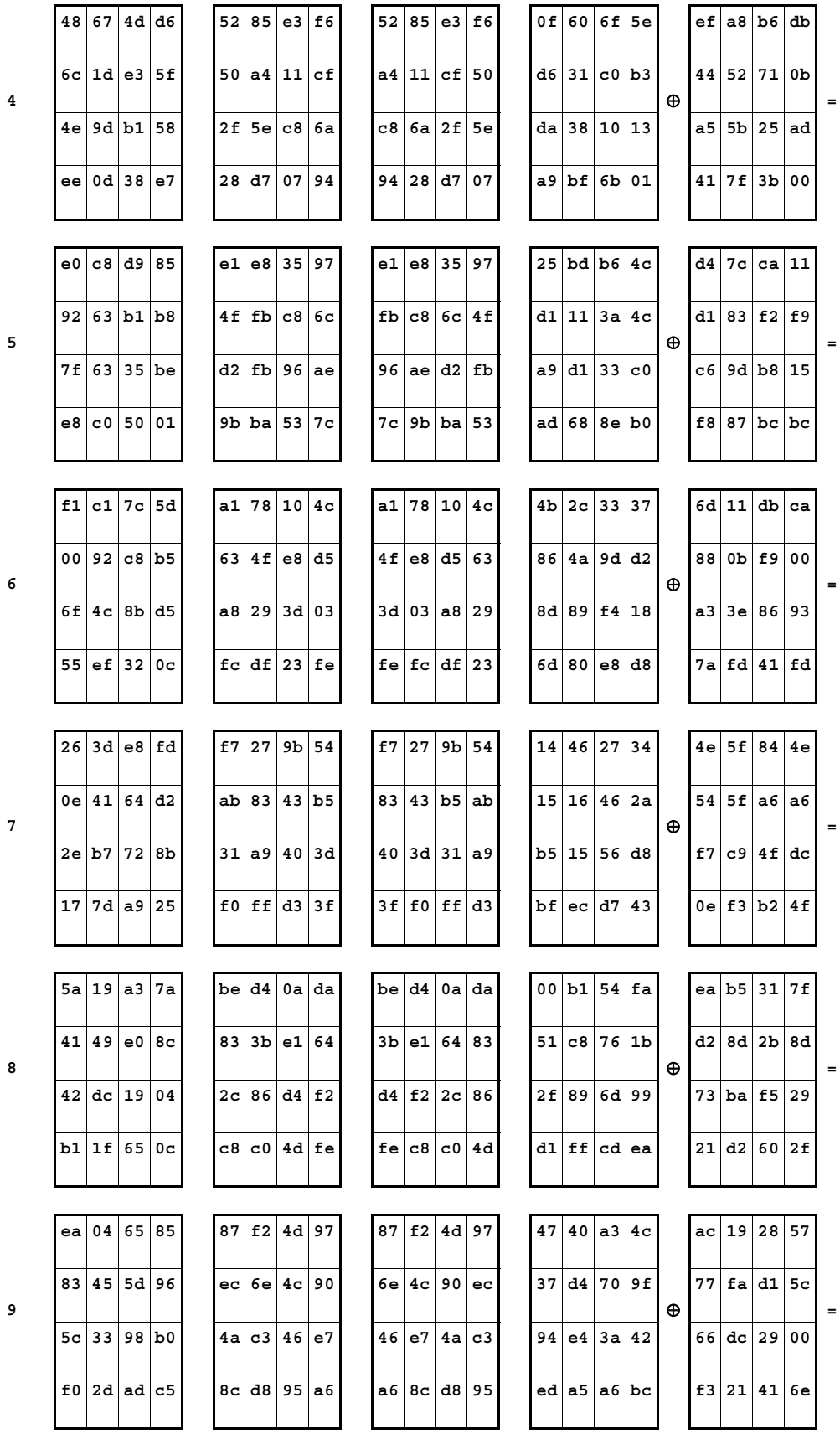

Copyright International Organization for Standardization
Reproduced by IHS under license with ISO
No reproduction or networking permitted without license from IHS
Not for Resale
© ISO/IEC 2005 — All rights reserved

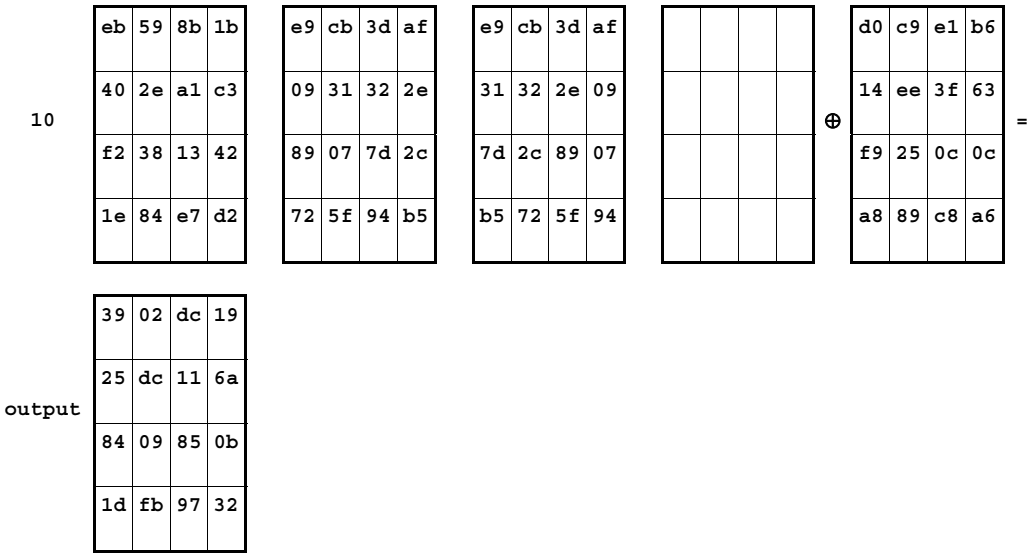

D.5 Camellia test vectors

Given inputs (plaintext and key), output (ciphertext and subkey) is described.

D.5.1 Camellia encryption

D.5.1.1 128-bit key

		Input	Output
1	Key	K = 0123456789abcdeffedcba9876543210	K_A= ae71c3d55ba6bf1d169240a795f89256
	Encryption	P = 0123456789abcdeffedcba9876543210	C = 67673138549669730857065648eabe43
2	Key	K = 4149d2aded9456681ec8b511d9e7ee04	K_A= c501214a4e3ebde87c7cb2849487e0ab
	Encryption	P = 2a9b0b74f4c5dc6239b7063a50a7946e	C = db93bb9c0add5ab59ed94d467a6277f8
3	Key	K = 47e8fb063dd4fe4ab430a73af7720206	K_A= 0e295b7d3f360780e68144421220764f
	Encryption	P = 0f9d74fc31ca654f921a606c024e7084	C = 147375f650037166ca66c010cda256a5
4	Key	K = 40bc8981241954a60a942b4a4334d1db	K_A= 02596e63aa22ce0b724a216c366fea38
	Encryption	P = 98048dd5d98b1f8dbbc6c7b238c9b948	C = 3804e8e37a934cd71490c04ac34fd01e
5	Key	K = 3da93f2679decb104422e07332f7e3fe	K_A= 83b4f6108365a66dd87f05f25fe79d4b
	Encryption	P = cca0f0f0ba4596c4d9c10e1cf5dff82e	C = 3ac304208199aa72ccddc42f5e6c7972

--`,,``,,-`-`,,`,,`,`,,`---

© ISO/IEC 2005 – All rights reserved

Copyright International Organization for Standardization
Reproduced by IHS under license with ISO
No reproduction or networking permitted without license from IHS
Not for Resale

D.5.1.2 192-bit key

		Input	Output
1	Key	*K* = 0123456789abcdeffedcba9876543210 0011223344556677	K_A= 0766a2135c44e288cf62016a06babed3 K_B= 8f3afac1cc974396c098a0b7e38b4df2
	Encryption	*P* = 0123456789abcdeffedcba9876543210	*C* = b4993401b3e996f84ee5cee7d79b09b9
2	Key	*K* = 5e89b44b505c09f156bf78055f78a83c 24bfc19edd5c94ef	K_A= ba0b31b670b34c26026dff7b74564087 K_B= 3c23619d33dd5fcbee712953eeda757f
	Encryption	*P* = dcac1785791e9ef611c7c7fcf3bcdfe7	*C* = 1e3bfb9b9a673ccb73c2c7da81d6e12d
3	Key	*K* = d3e748b043dc9f66388b7d50567cc6aa 2f884f3e53e4a3dd	K_A= 49667a715ec02be735943e7a4b4acc0c K_B= 264d533063503300aadf49fe61b451ce
	Encryption	*P* = 54b3c1a40fcb95658a0d6bea861326aa	*C* = d01df1a0f3c44431a7d48ecabc94b25e
4	Key	*K* = 1e1fe47104884ef696166eb80390add8 fb53ef43986dc268	K_A= d976805e61b8b9ec6f7df42b42c11239 K_B= 50c525b03a7575a6f061f5780eb98d91
	Encryption	*P* = d46ba51747457e7fd0fbcf267796d046	*C* = 5d2092ed17143e2f01d7c8e50965720b
5	Key	*K* = 43e6b5db547743bd09d19d312f2477ad 902e2f8334a70d4f	K_A= b4a87a3eaf5a4b27645242cf6cfede61 K_B= 83adbb334e4bf72262adb5e18fde7873
	Encryption	*P* = 7e6bb782f305788a1be6421f76f0f772	*C* = 9c7c8c7148b6fae78fba6576d6808e92

© ISO/IEC 2005 — All rights reserved
Copyright International Organization for Standardization
Reproduced by IHS under license with ISO
No reproduction or networking permitted without license from IHS
Not for Resale

D.5.1.3 256-bit key

		Input	Output
1	Key	K = 0123456789abcdeffedcba9876543210 00112233445566778899aabbccddeeff	K_A= 17d1b5b046df07fac9bb914b7f1937ee K_B= 3815214280a4d3c01848fd9ac7b1fe60
	Encryption	P = 0123456789abcdeffedcba9876543210	C = 9acc237dff16d76c20ef7c919e3a7509
2	Key	K = c940117c2eda1d1eea32c009d3c85421 b330d6547f0d36e7aa6a2b1e6d584636	K_A= 5ac47afed9b4b6393b932b20a4c3a3a8 K_B= cd96baa6ebd53714ceb77e99047b20cf
	Encryption	P = 4deadcb5a14f37e2679c344437032d64	C = bcf8a9903df05b7fc6961a6bddfc492e
3	Key	K = a8cd7528daab0f84153a668392acb92a 036cf1343dd64f3f7c7415eaec0c0b95	K_A= 1013cf0907021375c6a47660ca372337 K_B= 860596fdbac808d0b66e385332bc805d
	Encryption	P = 9857b3c731d0e51b02a524d66e78f721	C = 5559e464cf71c284c2279a6bddd8fa71
4	Key	K = e9b481268ad16606457bf03188fbc661 7b8315a64f4ee755ecaaed3727b08411	K_A= 8dfd62ace469c4c31944c934f6d819cd K_B= e7eb9972ca9768a2f513e0e48cd147cd
	Encryption	P = d980bdb42bcc3840069ec3984a7dc24d	C = 8a9cd33a905a24a38eb0b4fbf2e7d68f
5	Key	K = 971803e766ea3c52942a89bcda0ecd3e 14042ceba22107bb07545ce8685e4400	K_A= a02f5b9a72d9ce7c7085a59258d8c8ed K_B= 208a93b9dec678c522574c7dc203bca1
	Encryption	P = 640637eed79df51c19e54da1e114025c	C = b01ea3099f64847f8b0ad264841c64bd

--`,,`,,-`-`,,`,,`,`,,`---

© ISO/IEC 2005 – All rights reserved

Copyright International Organization for Standardization
Reproduced by IHS under license with ISO
No reproduction or networking permitted without license from IHS
Not for Resale

D.6 SEED test vectors

Given inputs (plaintext and key), output (ciphertext and subkeys) is described, where $K_A = K_{1,0} \| K_{1,1} \| K_{2,0} \| K_{2,1}$, $K_B = K_{3,0} \| K_{3,1} \| K_{4,0} \| K_{4,1}$, $K_C = K_{5,0} \| K_{5,1} \| K_{6,0} \| K_{6,1}$, $K_D = K_{7,0} \| K_{7,1} \| K_{8,0} \| K_{8,1}$, $K_E = K_{9,0} \| K_{9,1} \| K_{10,0} \| K_{10,1}$, $K_F = K_{11,0} \| K_{11,1} \| K_{12,0} \| K_{12,1}$, $K_G = K_{13,0} \| K_{13,1} \| K_{14,0} \| K_{14,1}$ and $K_H = K_{15,0} \| K_{15,1} \| K_{16,0} \| K_{16,1}$.

		Input	Output
1	Key	K = 00000000000000000000000000000000	K_A= 7c8f8c7e||c737a22c||ff276cdb||a7ca684a K_B= 2f9d01a1||70049e41||ae59b3c4||4245e90c K_C= a1d6400f||dbc1394e||85963508||0c5f1fcb K_D= b684bda7||61a4aeae||d17e0741||fee90aa1 K_E= 76cc05d5||e97a7394||50ac6f92||1b2666e5 K_F= 65b7904a||8ec3a7b3||2f7e2e22||a2b121b9 K_G= 4d0bfde4||4e888d9b||631c8ddc||4378a6c4 K_H= 216af65f||7878c031||71891150||98b255b0
	Encryption	P = 000102030405060708090a0b0c0d0e0f	C = 5e bac6e0054e166819aff1cc6d346cdb
2	Key	K = 000102030405060708090a0b0c0d0e0f	K_A= c119f584||5ae033a0||62947390||a600ad14 K_B= f6f6544e||596c4b49||c1a3de02||ce483c49 K_C= 5e742e6d||7e25163d||8299d2b4||790a46ce K_D= ea67d836||55f354f2||c47329fb||f50db634 K_E= 2bd30235||51679ce6||fa8d6b76||a9f37e02 K_F= 8b99cc60||0f6092d4||bdaefcfa||489c2242 K_G= f6357c14||cfccb126||a0aa6d85||f8c10774 K_H= 47f4fec5||353ae1ba||feccea48||a4ef9f9b
	Encryption	P = 00000000000000000000000000000000	C = c11f22f20140505084483597e4370f43

© ISO/IEC 2005 — All rights reserved
Copyright International Organization for Standardization
Reproduced by IHS under license with ISO
No reproduction or networking permitted without license from IHS
Not for Resale

3	Key	K = 0123456789abcdef0123456789abcdef	K_A= e47177f4||c737a22c||18752299||f462b107 K_B= adc60ed9||6b39f7eb||869e8beb||1d01ae42 K_C= 752bfe02||028f9991||a9671853||d12ac07f K_D= f9786eb9||7e4b890c||5d6c61c2||1e556102 K_E= acaee621||e97a7394||56d2e637||d8c704dc K_F= 67d24428||ef9d3283||ebaac63f||d1b343ca K_G= ebaac63f||ebaac63f||286ba527||06e94437 K_H= c52ed389||889f6217||25644913||1e0ff430
	Encryption	P = 0123456789abcdef0123456789abcdef	C = 504ec8814d4f85eb81ec4bd210111425
4	Key	K = 000102030405060708090a0b0c0d0e0f	K_A= c119f584||5ae033a0||62947390||a600ad14 K_B= f6f6544e||596c4b49||c1a3de02||ce483c49 K_C= 5e742e6d||7e25163d||8299d2b4||790a46ce K_D= ea67d836||55f354f2||c47329fb||f50db634 K_E= 2bd30235||51679ce6||fa8d6b76||a9f37e02 K_F= 8b99cc60||0f6092d4||bdaefcfa||489c2242 K_G= f6357c14||cfccb126||a0aa6d85||f8c10774 K_H= 47f4fec5||353ae1ba||feccea48||a4ef9f9b
	Encryption	P = 000102030405060708090a0b0c0d0e0f	C = a6e8d7325bbe0998cf235c1b57e64360
5	Key	K = 0123456789abcdeffedcba9876543210	K_A= 6d4e5dae ||4e297782||23a38bb1||5c412958 K_B= d12712dc||42ad6022||808af8c0||f57bf0a3 K_C= ab3fbdf1||7edaa2f6||1fa555f6||8595ff92 K_D= 0096103f||49ef98a7||50984c6f||145ab8e9 K_E= 6f85548d||77682f20||f6d0417e||58448635 K_F= 5b0f85d6||833fa7e3||88115657||aad9eb87 K_G= 6f6fb9a3||3116727f||4b3f1382||b0881d6c K_H= 3fb1117a||cee6c40f||f281cbdf||29b27cad
	Encryption	P = 0123456789abcdeffedcba9876543210	C = caf1d16d6ec079a21ea4066794222c2a

© ISO/IEC 2005 – All rights reserved
Copyright International Organization for Standardization
Reproduced by IHS under license with ISO
No reproduction or networking permitted without license from IHS
Not for Resale

Annex E

(informative)

Feature table

Algorithm name	Features	Standards, etc.
TDEA [2]	• Slow software processing speed	• Banking industry standard • ANSI X9.52, FIPS46-3 • Japanese e-government algorithm (CRYPTREC) – 3-key only
MISTY1 [3]	• Small hardware • Multi-platform algorithm (Good software performance across a variety of platform)	• Mobile industry standard (3GPP & GSM: KASUMI based on MISTY1) • IETF RFC 2994 • NESSIE selected algorithm • Japanese e-government algorithm (CRYPTREC)
CAST-128 [4]	• Multi-platform algorithm (Good software performance across a variety of platform) • [Hardware performance has not been evaluated by third party.]	• IETF RFC 2144 (see also RFCs 2984, 2451, and 2440 for use in S/MIME, IPsec, and OpenPGP) • Canadian e-government approved cipher
AES [5]	• Small hardware • Multi-platform algorithm (Good software performance across a variety of platform)	• FIPS197 • NESSIE selected algorithm • Japanese e-government algorithm (CRYPTREC)
Camellia [6]	• Small hardware • Multi-platform algorithm (Good software performance across a variety of platform) • Same interface as AES	• IETF RFC 3713 (see also RFCs 3657 and 4051 for use in S/MIME and XML) • NESSIE selected algorithm • Japanese e-government algorithm (CRYPTREC)
SEED [7]	• Moderately slow software processing speed • The key schedule part has a peculiar property • [Hardware performance has not been evaluated by third party.]	• Korean industry standard (TTAS.KO.12-004) • Korean e-government algorithm

--`,,``,,-`-`,,`,,`,`,,`---
Copyright International Organization for Standardization
Reproduced by IHS under license with ISO
No reproduction or networking permitted without license from IHS
Not for Resale
© ISO/IEC 2005 — All rights reserved

Bibliography

[1] ISO/IEC 18033-1, *Information technology — Security techniques — Encryption algorithms — Part 1: General.*

[2] ANSI X9.52-1998: Triple Data Encryption Algorithm Modes of Operation, 1999.

[3] M. Matsui: New Block Encryption Algorithm MISTY, Proceedings of the 4th Fast Software Encryption Workshop, Lecture Notes in Computer Science 1267, 1997.

[4] C. Adams, "Constructing Symmetric Ciphers Using the CAST Design Procedure", *Designs, Codes and Cryptography*, vol.12, no.3, November 1997, pp.283-316.

[5] FIPS197: Advanced Encryption Standard (AES), November 26, 2001.

[6] K. Aoki, T. Ichikawa, M. Kanda, M. Matsui, S. Moriai, J. Nakajima and T. Tokita: The 128-Bit Block Cipher Camellia, IEICE Transaction, vol.E85-A, no.1, pp.11-24, January 2002.

[7] TTAS.KO-12.0004: A 128-bit Block Encryption Algorithm Standard, Telecommunication Technology Association, 1999.

[8] ISO/IEC 9834 (all parts*), Information technology — Open Systems Interconnection — Procedures for the operation of OSI Registration Authorities.*

[9] ISO/IEC 9594-8, *Information technology — Open Systems Interconnection — The Directory: Public-key and attribute certificate frameworks.*

© ISO/IEC 2005 – All rights reserved

Copyright International Organization for Standardization
Reproduced by IHS under license with ISO
No reproduction or networking permitted without license from IHS
Not for Resale

ICS 35.040

Price based on 71 pages

--`,,`,,`-`-`,,`,,`,`,,`---

© ISO/IEC 2005 – All rights reserved
Copyright International Organization for Standardization
Reproduced by IHS under license with ISO
No reproduction or networking permitted without license from IHS

Not for Resale