INTERNATIONAL STANDARD

ISO/IEC 18017

First edition
2001-11-01

Information technology — Telecommunications and information exchange between systems — Private Integrated Services Network — Mapping functions for the employment of Virtual Private Network scenarios

Technologies de l'information — Télécommunications et échange d'information entre systèmes — Réseau privé à intégration de services — Fonctions de mappage pour l'emploi de scénarios de réseau privé virtuel

Reference number
ISO/IEC 18017:2001(E)

© ISO/IEC 2001

Copyright International Organization for Standardization
Provided by IHS under license with ISO
No reproduction or networking permitted without license from IHS

Not for Resale

PDF disclaimer

This PDF file may contain embedded typefaces. In accordance with Adobe's licensing policy, this file may be printed or viewed but shall not be edited unless the typefaces which are embedded are licensed to and installed on the computer performing the editing. In downloading this file, parties accept therein the responsibility of not infringing Adobe's licensing policy. The ISO Central Secretariat accepts no liability in this area.

Adobe is a trademark of Adobe Systems Incorporated.

Details of the software products used to create this PDF file can be found in the General Info relative to the file; the PDF-creation parameters were optimized for printing. Every care has been taken to ensure that the file is suitable for use by ISO member bodies. In the unlikely event that a problem relating to it is found, please inform the Central Secretariat at the address given below.

© ISO/IEC 2001

All rights reserved. Unless otherwise specified, no part of this publication may be reproduced or utilized in any form or by any means, electronic or mechanical, including photocopying and microfilm, without permission in writing from either ISO at the address below or ISO's member body in the country of the requester.

ISO copyright office
Case postale 56 • CH-1211 Geneva 20
Tel. + 41 22 749 01 11
Fax + 41 22 749 09 47
E-mail copyright@iso.ch
Web www.iso.ch

Printed in Switzerland

Copyright International Organization for Standardization
Provided by IHS under license with ISO
No reproduction or networking permitted without license from IHS

© ISO/IEC 2001 – All rights reserved

Not for Resale

Table of contents

Foreword		**iv**
Introduction		**v**
1.	Scope	**1**
2.	Conformance	**1**
3.	Normative References	**1**
4.	Terms and definitions	**2**
5.	List of acronyms	**2**
6.	Access arrangements	**3**
6.1	Separate access	**4**
6.2	Shared Access: Common access protocol with call discrimination	**4**
6.3	Dedicated Access	**5**
7	Capabilities at the Q reference point	**5**
8	Mapping functions	**6**
8.1	Physical Adaptation	**6**
8.2	Mapping Matrix	**6**
8.2.1	Channel Allocation	**6**
8.2.2	Bearer Conditioning for the D_Q-channel	**7**
8.2.3	Interface-related Functions	**8**
Annex A - Implementation Conformance Statement Proforma		**9**

© ISO/IEC 2001 – All rights reserved

Copyright International Organization for Standardization
Provided by IHS under license with ISO
No reproduction or networking permitted without license from IHS
Not for Resale

Foreword

ISO (the International Organisation for Standardisation) and IEC (the International Electrotechnical Commission) form the specialised system for world-wide standardisation. National bodies that are members of ISO or IEC participate in the development of International Standards through technical committees established by the respective organisation to deal with particular fields of technical activity. ISO and IEC technical committees collaborate in fields of mutual interest. Other international organisations, governmental and non-governmental, in liaison with ISO and IEC, also take part in the work.

International Standards are drafted in accordance with the rules given in the ISO/IEC Directives, Part 3.

In the field of information technology, ISO and IEC have established a joint technical committee, ISO/IEC JTC 1. Draft International Standards adopted by the joint technical committee are circulated to national bodies for voting. Publication as an International Standard requires approval by at least 75 % of the national bodies casting a vote.

Attention is drawn to the possibility that some of the elements of this International Standard may be the subject of patent rights. ISO and IEC shall not be held responsible for identifying any or all such patent rights.

International Standard ISO/IEC 18017 was prepared by Joint Technical Committee ISO/IEC JTC 1*, Information technology,* Subcommittee SC 6, *Telecommunications and information exchange between systems*.

Annex A forms a normative part of this International Standard.

© ISO/IEC 2001 – All rights reserved
Copyright International Organization for Standardization
Provided by IHS under license with ISO
No reproduction or networking permitted without license from IHS
Not for Resale

Introduction

This International Standard is one of a series of PISN mapping standards applicable at the C reference point. Mapping standards specify the assignment of interfaces and the multiplexed physical channel within the interface to B-channels at the Q reference point. Figure 1 shows the relationship of this standard to other mapping standards.

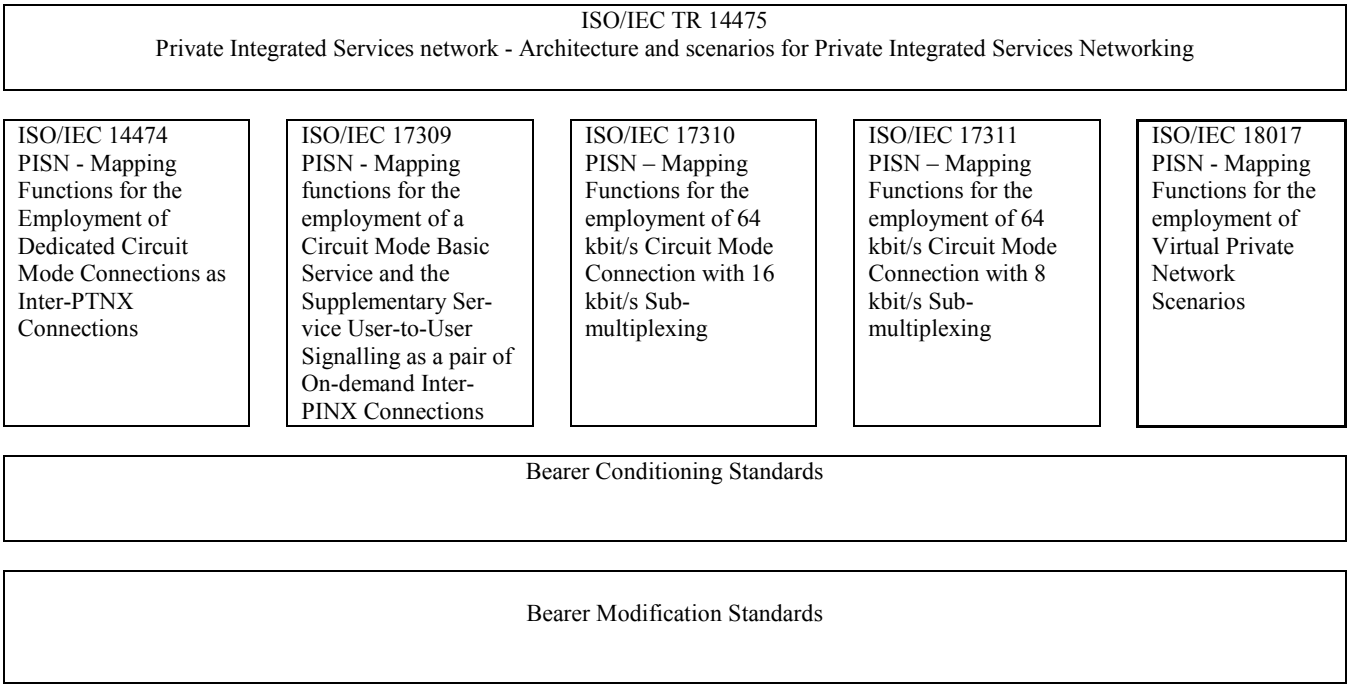

Figure 1 - Structure of PISN Scenario and Mapping standards

© ISO/IEC 2001 – All rights reserved

Copyright International Organization for Standardization
Provided by IHS under license with ISO
No reproduction or networking permitted without license from IHS
Not for Resale

Information technology – Telecommunications and information exchange between systems – Private Integrated Services Network – Mapping functions for the employment of Virtual Private Network scenarios

1. Scope

This International Standard defines the mapping functions in exchanges of private integrated services networks (PISN) required for their attachment to Virtual Private Network (VPN) functionality of public (or third party provided) network equipment.

Mapping functions are required to provide for the physical termination of the interface at the C or T reference points, and for the mapping of user channels and signalling information flows at the Q reference point to the appropriate channels or time-slots at the C or T reference point.

At the T reference, point it is assumed that the protocol used on the D channel is the enhanced version of DSS1. These protocol enhancements are given in Annex Q and Annex X of Recommendations Q.931 and Q.932 respectively.

The mapping function specified in this International Standard are applicable to PINXs connected to a VPN that supports either PISN information flows between accesses and/or PISN services.

The C and Q reference points are defined in ISO/IEC 11579-1. The T reference point is defined in ITU-T Rec. I.411.

The types of interfaces at the C or T reference point covered by this International Standard are the ISDN primary rate interface and the basic access interface.

2. Conformance

In order to conform to this International Standard, a PINX shall satisfy the requirements identified in the Implementation Conformance Statement (ICS) proforma in Annex A.

3. Normative References

The following normative documents contain provisions which, through reference in this text, constitute provisions of this International Standard. For dated references, subsequent amendments to, or revisions of, any of these publications do not apply. However, parties to agreements based on this International Standard are encouraged to investigate the possibility of applying the most recent editions of the normative documents indicated below. For undated references, the latest edition of the normative document referred to applies. Members of ISO and IEC maintain registers of currently valid International Standards.

ISO/IEC TR 14475:2001, *Information technology - Telecommunications and information exchange between systems - Private Integrated Services Network - Architecture and scenarios for Private Integrated Services Networking*

ETS 300 415:1994, *Private Telecommunication Network (PTN); Terms and definitions*

ITU-T Rec. Q.920:1993, *Digital Subscriber Signalling System No. 1 (DSS1) - ISDN user-network interface data link layer - General aspects*

ITU-T Rec. Q.920, Amend 1: 2000, *Amendment 1 to ITU-T Recommendation Q.920*

ITU-T Rec. Q.921:1997, *ISDN user-network interface - Data link layer specification*

© ISO/IEC 2001 – All rights reserved

Copyright International Organization for Standardization
Provided by IHS under license with ISO
No reproduction or networking permitted without license from IHS
Not for Resale

ITU-T Rec. Q.921, Amend 1: 2000, *Amendment 1 to ITU-T Recommendation Q.921*

ITU-T Rec. Q.931:1998, *ISDN user-network interface layer 3 specification for basic call control*

ITU-T Rec. Q.932,1998, *Digital subscriber signalling system No. 1 – Generic procedures for the control of ISDN supplementary services*

4. Terms and definitions

For the purpose of this International Standard the terms and definitions given in ETS 300 415 and the following apply.

4.1 α reference point: boundary between the Inter-Connecting Network (ICN) and the public ISDN.

NOTE - The ICN at this point provides gateway functions such as numbering, charging, management and routing.

4.2 channel: means of bi-directional transmission of user or signalling information between two points.

4.2.1 D_Q-Channel: channel used to convey call control information between the Q reference points of two peer PINXs.

4.2.2 U_Q-Channel: channel used to convey user information between the Q reference points of two peer PINXs.

4.3 Interconnecting Network (ICN): emulation of transit-PINX functionality by equipment that is physically part of the public network, includes one or more IVNs and may include the emulation of gateway-PTNX functionality.

4.4 inter-PINX connection: connection provided by an intervening network (IVN) between two C reference points used to transport inter-PINX information from the PISN control plane and/or the PISN user plane.

4.5 inter-PINX link: link between the Q reference points of two PINXs, comprising the totality of signalling transfer and user information transfer means.

4.6 T+ reference point: reference point between an Attached PINX and the ICN.

NOTE - The interface at the T+ reference point supports private network calls (PISN) and it may also support public ISDN calls.

4.7 public network equipment: equipment of a public network provider, which is used to provide public network (ISDN) services and virtual private network (VPN) services.

NOTE - The term is also used as a synonym to designate equipment of any other third party which is used to provide virtual private network (VPN) services only, and which may or may not provide access functions to a public network.

4.8 third party: generic term designating a (legal) body providing VPN services either in conjunction with or without public network services.

NOTE - In the first case the third party is also known as a public network provider.

4.9 Virtual Private Network (VPN): private network transmission and switching functionality emulated by third party provided equipment.

NOTE - The functionality provided by a VPN includes transit-PINX functionality and/or end-PINX functionality (i.e. it serves the originating or destination user).

4.10 VPN-PINX: that part of a third party provided switched network that provides transit-PINX functionality and/or end-PINX functionality.

4.11 attached PINX: PINX attaching to the VPN. In the context of a call, the attached PINX can be an end-PINX (i.e. serving the originating or destination user or acting as a gateway with another network) or it can be a transit- PINX.

5. List of acronyms

CSIG C reference point SIGnalling information flows

DLCI Data Link Connection Identifier

© ISO/IEC 2001 – All rights reserved
Copyright International Organization for Standardization
Provided by IHS under license with ISO
No reproduction or networking permitted without license from IHS
Not for Resale

ICN InterConnecting Network

ICS Implementation Conformance Statement

ISDN Integrated Services Digital Network

PINX Private Integrated Services Network Exchange

PISN Private Integrated Services Network

PSS1 Private Signalling System Number 1; commonly known as QSIG

QSIG Q reference point SIGnalling information flows

TSIG T reference point SIGnalling information flows

VPN Virtual Private Network

6. Access arrangements

In a VPN scenario, a PINX is connected to an access provided by a third party network (normally a public network) that supports, as a minimum, PISN information flows and possibly PISN services. The VPN scenarios are described in ISO/IEC TR 14475 and they include the emulation by the third party network of a transit, end or gateway PINX functionality.

The access control protocol for the U-channels used to provide PISN services are specified independently of the interface types provided by the third party network. The mapping of the D-channel and B-channels at the Q reference point to the interfaces and time slots at the access interface (C reference point) are specified in this standard.

This International Standard applies to the following Access Arrangements, which are described in ISO/IEC TR 14475.

Table 1 - Access Arrangements

No.	Description	Type of Mapping
1.	Separate access: T and C reference points reside on different interfaces	Static
2.3	Shared Access: The Protocol Control functions in the network layer supports both TSIG and PSS1 information flows and employs a discrimination function exists to distinguish between ISDN and VPN calls.	Dynamic
3.	Dedicated Access: All calls are routed via a C reference point as PISN calls.	Static

NOTE - Shared Accesses Types 2.1 and 2.2 are not included in this standard since there are no standardised access arrangements that support the required functionality.

ITU-T has standardised enhancements to the network nodal interface (NNI) protocol for the support of ISDN services that support the transport of PSS1 information flows. VPNs that implement the IUT-T VPN recommendations are therefore able to the support interoperability between scenarios types 1and 3.

© ISO/IEC 2001 – All rights reserved

Copyright International Organization for Standardization
Provided by IHS under license with ISO
No reproduction or networking permitted without license from IHS
Not for Resale

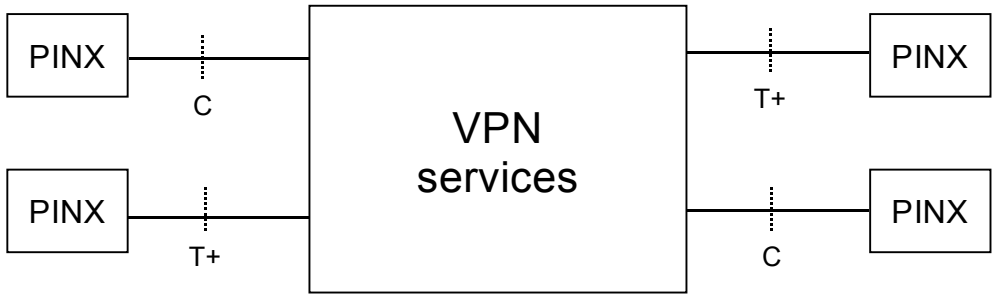

Figure 2 - VPN provides interoperability between PINXs attached at either C or T+ reference points

6.1 Separate access

The PINX uses a separate access for PISN calls and public network calls. The type of interface indicates inherently the functions to be invoked for the support of the respective information flows.

The mapping of U_Q-channels to the channels (time slots) available at the C reference point is static, i.e. time independent.

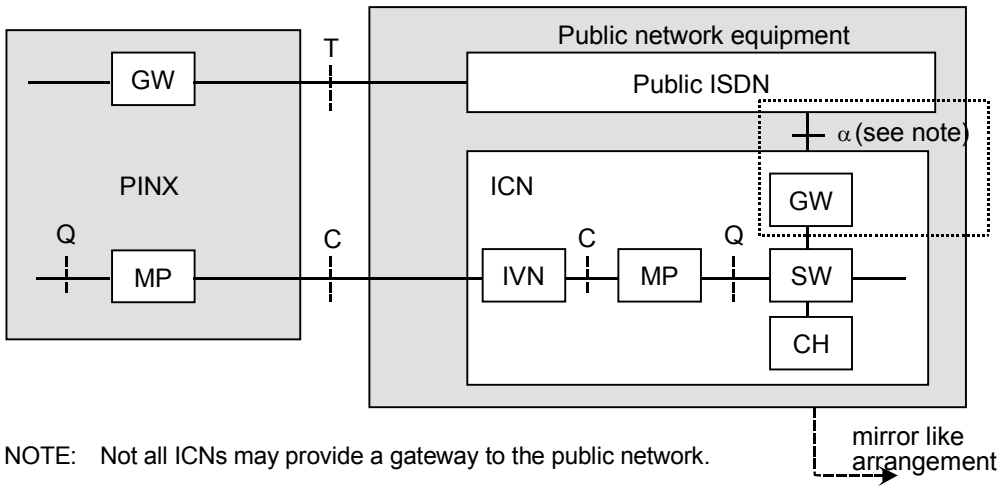

Figure 3 - VPN access with separate interfaces for public and PISN calls

6.2 Shared Access: Common access protocol with call discrimination

A common access control protocol is used for PISN and public calls. In this case, the attached PINX shall support the protocol extensions defined in Annex Q of ITU-T Rec. Q.931 and Annex X of ITU-T Rec. Q.932 for PISN calls.

NOTE - ITU-T has also enhanced ISUP so that VPN applications located in different nodal entities are able to exchange PSS1 information flows

The PINX provides separate call control for ISDN calls and PISN calls. Each of these call control entities uses a common protocol control that is specified in ITU-T Rec. Q.931 and ITU-T Rec. Q.932. The PINX also provides a B channel co-ordination function that allows both ISDN and PISN calls to be dynamically allocated to the time-slots available at the interface. A call discrimination information element that is defined in ITU-T Rec. Q.931 is used to distinguish between PISN calls and public calls.

NOTE 1 - The call discriminator is the VPN identifier information element (IE) or as a national option the Network Specific Facility IE may be used.

NOTE 2 - A VPN supporting scenario type 2.3 also supports interoperability between scenarios types 1and 3.

In the ISDN the call discrimination information element enables the separate processing of ISDN and VPN (PISN) calls. The ISDN as a minimum provides for the transmission of the PISN call information flows between accesses with compatible VPN call handling capabilities. For example, a VPN call may be connected between shared access and any of the VPN accesses specified in this International Standard.

© ISO/IEC 2001 – All rights reserved
Copyright International Organization for Standardization
Provided by IHS under license with ISO
No reproduction or networking permitted without license from IHS
Not for Resale

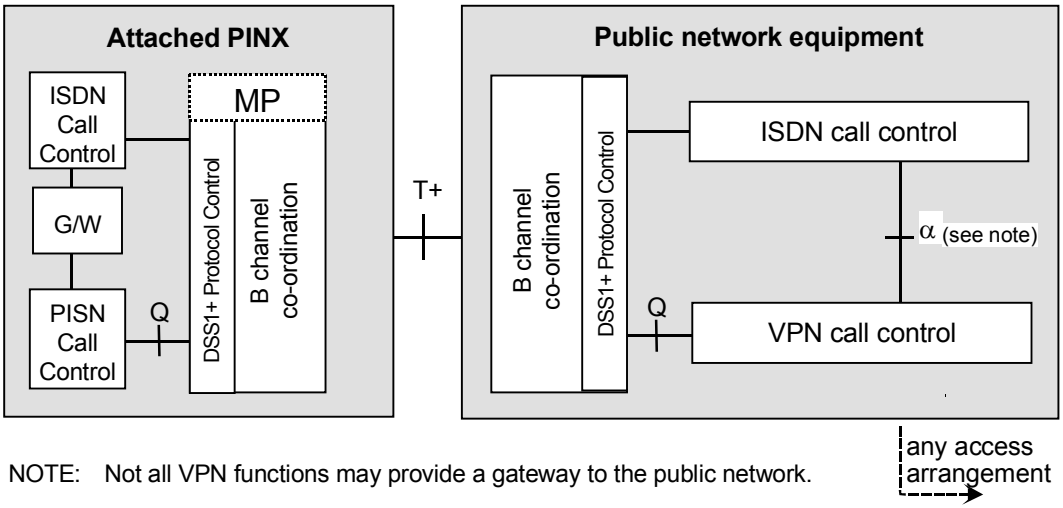

Figure 4 - Shared access arrangement using an enhance ISDN access protocol (DSS1+)

6.3 Dedicated Access

Only the information flows for PISN calls occur at the interface at the C reference point. Break-out into the public network occurs through a gateway function within the VPN. Number analysis and routing functions in the ICN determine which calls are to be routed to the public network gateway. The VPN may provide gateway functions at different geographical points and to more than one public network.

The mapping of U_Q-channels is static, i.e. no per-call reallocation of the mapping onto the time-slots at the C reference point takes place.

NOTE - This sub-scenario can be considered as the trivial case of sub-scenario 1, if no interface supporting the T reference point has been configured. In this sub-scenario the attached PINX does not provide gateway functionality.

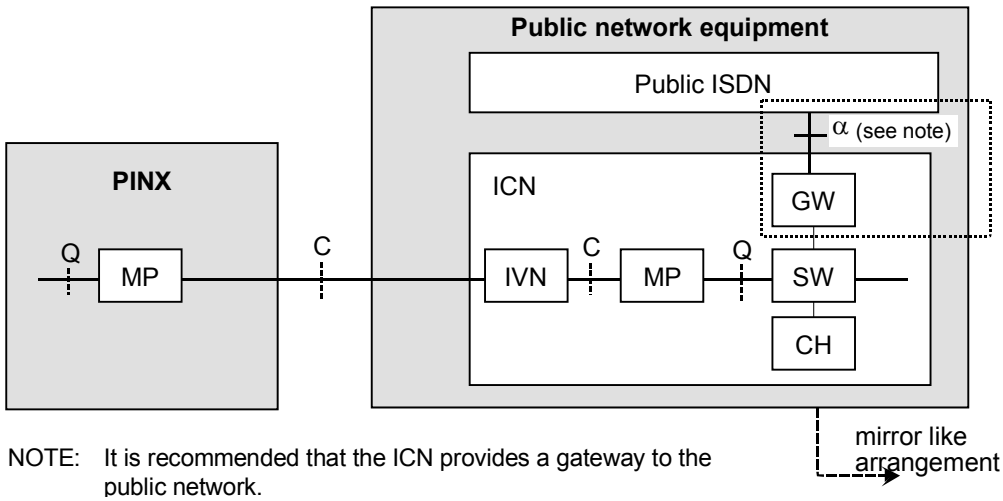

Figure 5 - Dedicated access using QSIG as an access protocol

7. Capabilities at the Q reference point

- For each instance of Q reference point the attached PINX shall provide:
  - 1 signalling channel (D_Q) for carrying the inter-PINX layer 3 signalling protocol; and
  - N user channels (U_Q)
  - The user channels are numbered 1…N.

© ISO/IEC 2001 – All rights reserved
Copyright International Organization for Standardization
Provided by IHS under license with ISO
No reproduction or networking permitted without license from IHS
Not for Resale

- For a U_Q-channel the following bearer capabilities shall be provided:
  - information transfer rate: 64 kbit/s
  - other attributes shall be the same as at the C reference point.

NOTE - The provision of bearer conditioning can change these attributes. However, this is outside the scope of this International Standard.

- For a D_Q-channel the following bearer capability shall be provided:
  - Transfer mode: Packet mode
  - Information transfer capability: unrestricted digital information
  - Information transfer rate: implementation dependent
  - Other attributes shall be the same as at the C reference point.

8. Mapping functions

The PINX mapping functions shall meet the following requirements.

8.1 Physical Adaptation

A PINX shall support at least one of the following physical adaptations.

- ISDN 2048 kbit/s Primary Rate User-Network Layer 1 Interface Layer 1 termination shall be in accordance with ITU-T Rec. I.431.
- ISDN 1,544 kbit/s Primary Rate User-Network Layer 1 Interface Layer 1 termination shall be in accordance with ITU-T Rec. I.430.
- ISDN Basic User-Network Layer 1 Interface Layer 1 termination shall be in accordance with ITU-T Rec. I.410, excluding the application of the point-to-multi-point mode of operation.

8.2 Mapping Matrix

The Mapping Matrix provides for the allocation of the channels provided by the physical adaptation function at the Q reference point, for D_Q-channel bearer conditioning and for interface-related Layer 3 signalling functions that are part of CSIG.

8.2.1 Channel Allocation

In all sub-scenarios the PINX shall map a single instance of Q reference point onto some or all time-slots of a single interface at the C reference point.

The mapping matrix shall maintain a one-to-one relationship between a B- or D-channel at the interface at the C reference point and a channel at the Q reference point. Whether this relationship is fixed or dynamic depends on the type of sub-scenario.

8.2.1.1 Accesses Arrangements with fixed channel allocation

These are sub-scenarios 1 and 3.

- **ISDN 2048 kbit/s Primary Rate User-Network Layer 1 Interface**
  - Time-slots, 1…15 and 17…31) may be allocated as UQ-channels. The number of UQ-channels shall be subject to agreement between the PISN administrator and the third party providing the VPN service.
  - When (1…30) time slots are allocated as UQ-channels, the UQ-channels shall be mapped onto the time-slots at the interface as follows:
    - The D_Q-channel shall be mapped onto time-slot 16.
    - Time-slots 1...15 at the C reference point correspond to U_Q -channels 1...15;
    - Time-slots 17...31 at the C reference point correspond to U_Q -channels 17...31.
- **ISDN 1544 kbit/s Primary Rate User-Network Layer 1 Interface**
  - One contiguous range of time-slots (1...23) shall be allocated as UQ-channels. The number of UQ-channels shall be subject to agreement between the PISN administrator and the third party providing the VPN service.

© ISO/IEC 2001 – All rights reserved
Copyright International Organization for Standardization
Provided by IHS under license with ISO
No reproduction or networking permitted without license from IHS
Not for Resale

- When (1...23) time slots are allocated as UQ-channels, the UQ-channels shall be mapped onto the time-slots at the interface as follows:
  - The DQ-channel shall be mapped onto time-slot 24.
  - Time-slots 1...23 at the C reference point correspond to UQ-channels 1...23.

- **ISDN Basic User-Network Layer 1 Interface**
  Either one or both B-channels at the C reference point shall be allocated as U_Q-channels. The number of U_Q-channels shall be subject to agreement between the PISN administrator and the third party providing the VPN service.
  The following channel allocation and U_Q-channel numbering shall be provided:
  - The D_Q-channel shall be mapped onto the D-channel of the interface at the C reference point.
  - The UQ-channels shall be mapped onto the B-channels of the interface as follows:
    - B-channel 1 at the C reference point corresponds to UQ -channel 1;
    - B-channel 2 at the C reference point corresponds to U_Q -channel 2.

8.2.1.2 Access Arrangements with dynamic channel allocation

This refers to shared access.

- **ISDN 2048 kbit/s Primary Rate User-Network Layer 1 Interface**
  - The allocation of the DQ-channel shall always been fixed. It shall be mapped onto time-slot 16.
  - If due to the invocation of private network functionality, a channel at the Q reference point is to be mapped to a time-slot at the C reference point, the following channel allocation and UQ-channel numbering shall be provided:
    - Time-slots 1...15 at the C reference point correspond to UQ -channels 1…15;
    - Time-slots 17...31 at the C reference point correspond to UQ -channels 17…31.
    - Channels not requiring private network functionality shall remain allocated to public network functionality. This is outside the scope of this standard.

- **ISDN 1544 kbit/s Primary Rate User-Network Layer 1 Interface**
  - The allocation of the DQ-channel shall always been fixed. It shall be mapped onto time-slot 24.
  - If due to the invocation of private network functionality a channel at the Q reference point is to be mapped to a time-slot at the C reference point, the following channel allocation and UQ-channel numbering shall be provided:
    - Time-slots 1…23 at the C reference point correspond to UQ-channels 1…23;
    - Channels not requiring private network functionality shall remain allocated to public network functionality. This is outside the scope of this standard.

- **ISDN Basic User-Network Layer 1 Interface**
  - The allocation of the DQ-channel shall always be fixed. It shall be mapped onto the D-channel at the C reference point.
  - If due to the invocation of private network functionality a channel at the Q reference point is to be mapped to a time-slot at the C reference point, the following channel allocation and UQ-channel numbering shall be provided:
    - time-slot 1 at the C reference point corresponds to UQ-channel 1;
    - time-slot 2 at the C reference point corresponds to UQ-channel 2.
    - Channels not requiring private network functionality shall remain allocated to public network functionality. This is outside the scope of this standard.

8.2.2 Bearer Conditioning for the D_Q-channel

For scenarios type 1 and 3, the signalling carriage system (Layer 2) on a D_Q-channel shall be according to the symmetrical application in Annex A of ITU-T Rec. Q.920, Amend 1:2000 and annex J of ITU-T Rec. Q.921, Amend 1:2000. Only the point-to-point procedures are applicable. The SM / SREJ option, defined in annex E of ITU-T Rec. Q.921, shall not apply. The attached PINX is always configured in the slave mode.

© ISO/IEC 2001 – All rights reserved

Copyright International Organization for Standardization
Provided by IHS under license with ISO
No reproduction or networking permitted without license from IHS
Not for Resale

For scenarios type 2.3, the signalling carriage system (Layer 2) on a D_Q-channel shall be according to ITU-T Recommendations Q.920 and Q.921. Only the point-to-point procedures are applicable.

8.2.3 Interface-related Functions

8.2.3.1 Activation/deactivation procedure for the basic access

NOTE - Whether deactivation and re-activation procedures to maintain its synchronisation with the bit clock of the public network equipment shall apply for the individual sub-scenarios is outside the scope of this International Standard.

Copyright International Organization for Standardization
Provided by IHS under license with ISO
No reproduction or networking permitted without license from IHS
Not for Resale
© ISO/IEC 2001 – All rights reserved

Annex A
(normative)

Implementation Conformance Statement (ICS) Proforma

A.1. Introduction

The supplier of a protocol implementation, which is claimed to conform to this Standard, shall complete the Implementation Conformance Statement (ICS) proforma in A.3.

A completed ICS proforma is the ICS for the implementation in question. The ICS is a statement of the capabilities and options that have been implemented. The ICS can have a number of uses, including the following:

– by the equipment implementer, as a check list to reduce the risk of failure to conform to the Standard through oversight;

– by the supplier and acquirer, or potential acquirer, of the implementation, as a detailed indication of the capabilities of the implementation, stated relative to the common basis for understanding provided by the Standard's ICS proforma;

– by the user or potential user of an implementation, as a basis for initially checking the possibility of interworking with another implementation. While interworking can never be guaranteed, failure to interwork can often be predicted from incompatible ICSs.

A.2. Instructions for completing the ICS proforma

A.2.1 General structure of the ICS proforma

The ICS proforma is a fixed-format questionnaire divided into subclauses each containing a group of individual items. Each item is identified by an item number, the name of the item (question to be answered), and the reference(s) to the clause(s) that specifies (specify) the item in the main body of this Standard.

The "Status" column indicates whether an item is applicable and if so whether support is mandatory or optional. The following terms are used:

m	mandatory (the capability is required for conformance);
o	optional (the capability is not required for conformance, but if the capability is implemented it is required to conform to the specifications);
o.<n>	optional, but support of at least one of the group of options labelled by the same numeral <n> is required;
x	prohibited;
c.<cond>	conditional requirement, depending on support for the item or items listed in condition <cond>;
<item>:m	simple conditional requirement, the capability being mandatory if item number <item> is supported, otherwise not applicable;
<item>:o	simple conditional requirement, the capability being optional if item number <item> is supported, otherwise not applicable;

Answers to the questionnaire items are to be provided either in the "Support" column, by simply marking an answer to indicate restricted choice (Yes) or (No), or in the "Not Applicable" column (N/A).

A.2.2 Additional information

Items of Additional Information allow a supplier to provide further information intended to assist the interpretation of the ICS. It is not intended that a large quantity will be supplied, and an ICS can be considered complete without such information. Examples might be an outline of the ways in which a (single) implementation can be set up to operate in a variety of environments and configurations.

References to items of Additional Information may be entered next to any answer in the questionnaire, and may be included in items of Exception Information.

© ISO/IEC 2001 – All rights reserved

Copyright International Organization for Standardization
Provided by IHS under license with ISO
No reproduction or networking permitted without license from IHS
Not for Resale

A.2.3 Exception information

It may occasionally happen that a supplier will wish to answer an item with mandatory or prohibited status (after any conditions have been applied) in a way that conflicts with the indicated requirement. No pre-printed answer will be found in the support column for this. Instead, the supplier is required to write into the support column an x.<i> reference to an item of Exception Information, and to provide the appropriate rationale in the Exception item itself.

An implementation for which an Exception item is required in this way does not conform to this Standard. A possible reason for the situation described above is that a defect in the Standard has been reported, a correction for which is expected to change the requirement not met by the implementation.

A.3. ICS proforma for PINX implementation

A.3.1 Implementation identification

Supplier	
Contact point for queries about the ICS	
Implementation name(s) and version(s)	
Other information necessary for full identification, e.g. name(s) and version(s) for machines and/or operating systems; system name(s)	

Only the first three items are required for all implementations; other information may be completed as appropriate in meeting requirements for full identification.

The terms name and version should be interpreted appropriately to correspond with a supplier's terminology (e.g. type, series, model).

A.3.2 Implementation summary

Implementation version	1.0
Addenda implemented (if applicable)	
Amendments implemented	
Have any exception items been required (see A.2.3)?	No [ ] Yes [ ] (The answer Yes means that the implementation does not conform to this Standard)
Date of statement	

--`,,```,,,,````-`-`,,`,,`,`,,`---
© ISO/IEC 2001 – All rights reserved
Copyright International Organization for Standardization
Provided by IHS under license with ISO
No reproduction or networking permitted without license from IHS
Not for Resale

A.3.3 Access Arrangements

Item	Name of Item	Reference	Status	N/A	Support
A1	Support of Access Type 1; Separate Access	6.1	o.1		Yes [ ]
A2	Support of Access Type 2.3, Shared Access	6.2	o.1		Yes [ ]
A3	Support of Access Type 3: Dedicated Access	6.3	o.1		Yes [ ]

A.3.4 Public Gateway

Item	Name of Item	Reference	Status	N/A	Support
B1	Support of Gateway to public Network at α reference point, Access Type 1	6.1	A1:o		Yes [ ]
B2	Support of Gateway to public Network at α reference point, Access Type 2.3	6.2	A2:o		Yes [ ]
B3	Support of Gateway to public Network at α reference point, Access Type 3	6.3	A3:o		Yes [ ]

A.3.5 Mapping Functions

A.3.5.1 Physical Adaptation

Item	Name of Item	Reference	Status	N/A	Support
C1	ISDN 2048 kbit/s Primary Rate User-Network Layer 1 Interface	8.1	o.2		Yes [ ]
C2	ISDN 1,544 kbit/s Primary Rate User-Network Layer 1 Interface	8.1	o.2		Yes [ ]
C3	ISDN Basic User-Network Layer 1 Interface	8.1	o.2		Yes [ ]

A.3.5.2 Channel Allocation (fixed)

Item	Name of Item	Reference	Status	N/A	Support
D1	ISDN 2048 kbit/s Primary Rate User-Network Layer 1 Interface, time slot allocation	8.2.1.1	c.1		Yes [ ]
D2	ISDN 1,544 kbit/s Primary Rate User-Network Layer 1 Interface, time slot allocation	8.2.1.1	c.2		Yes [ ]
D3	ISDN Basic User-Network Layer 1 Interface, time slot allocation	8.2.1.1	c.3		Yes [ ]

c.1 If (A1 or A3) and C1 then mandatory else not applicable.

c.2 If (A1 or A3) and C2 then mandatory else not applicable.

c.3 If (A1 or A3) and C3 then mandatory else not applicable.

© ISO/IEC 2001 – All rights reserved

Copyright International Organization for Standardization
Provided by IHS under license with ISO
No reproduction or networking permitted without license from IHS
Not for Resale

A.3.5.3 Channel Allocation (dynamic)

Item	Name of Item	Reference	Status	N/A	Support
E1	ISDN 2048 kbit/s Primary Rate User-Network Layer 1 Interface, time slot allocation	8.2.1.2	(A2 and C1):m		Yes [ ]
E2	ISDN 1,544 kbit/s Primary Rate User-Network Layer 1 Interface, time slot allocation	8.2.1.2	(A2 and C2):m		Yes [ ]
E3	ISDN Basic User-Network Layer 1 Interface, time slot allocation	8.2.1.2	(A2 and C3):m		Yes [ ]

A.3.5.4 Bearer Conditioning of the D_Q-channel

Item	Name of Item	Reference	Status	N/A	Support
F1	Support of Annex A of ITU-T Rec. Q.920, Amend 1:2000 and annex J of ITU-T Rec. Q.921, Amend 1:2000.	8.2.2	(A1 or A3):m		Yes [ ]
F2	Support of ITU-T Rec. Q.920 and Rec. Q.921	8.2.2	A2:m		Yes [ ]

© ISO/IEC 2001 – All rights reserved
Copyright International Organization for Standardization
Provided by IHS under license with ISO
No reproduction or networking permitted without license from IHS
Not for Resale

ICS 33.040.35

Price based on 12 pages

© ISO/IEC 2001 – All rights reserved

Copyright International Organization for Standardization
Provided by IHS under license with ISO
No reproduction or networking permitted without license from IHS

Not for Resale