INTERNATIONAL STANDARD

ISO/IEC 17878

Second edition
2003-04-01

Information technology — Telecommunications and information exchange between systems — Private Integrated Services Network — Inter-exchange signalling protocol — Private User Mobility (PUM) — Call handling additional network features

Technologies de l'information — Télécommunications et échange d'information entre systèmes — Réseau privé à intégration de services — Protocole de signalisation d'interéchange — Mobilité de l'usager privé (PUM) — Caractéristiques additionnelles de réseau de traitement d'appel

Reference number
ISO/IEC 17878:2003(E)

© ISO/IEC 2003

Copyright International Organization for Standardization
Provided by IHS under license with ISO
No reproduction or networking permitted without license from IHS

Not for Resale

PDF disclaimer

This PDF file may contain embedded typefaces. In accordance with Adobe's licensing policy, this file may be printed or viewed but shall not be edited unless the typefaces which are embedded are licensed to and installed on the computer performing the editing. In downloading this file, parties accept therein the responsibility of not infringing Adobe's licensing policy. The ISO Central Secretariat accepts no liability in this area.

Adobe is a trademark of Adobe Systems Incorporated.

Details of the software products used to create this PDF file can be found in the General Info relative to the file; the PDF-creation parameters were optimized for printing. Every care has been taken to ensure that the file is suitable for use by ISO member bodies. In the unlikely event that a problem relating to it is found, please inform the Central Secretariat at the address given below.

© ISO/IEC 2003

All rights reserved. Unless otherwise specified, no part of this publication may be reproduced or utilized in any form or by any means, electronic or mechanical, including photocopying and microfilm, without permission in writing from either ISO at the address below or ISO's member body in the country of the requester.

ISO copyright office
Case postale 56 • CH-1211 Geneva 20
Tel. + 41 22 749 01 11
Fax + 41 22 749 09 47
E-mail copyright@iso.org
Web www.iso.org

Published in Switzerland

--`,,`-`-`,,`,,`,`,,`---

Copyright International Organization for Standardization
Provided by IHS under license with ISO
No reproduction or networking permitted without license from IHS

© ISO/IEC 2003 — All rights reserved

Not for Resale

Contents

Foreword		vi
Introduction		vii
1	Scope	1
2	Conformance	1
3	Normative references	1
4	Terms and definitions	3
4.1	External definitions	3
4.2	Alternative identifier	3
4.3	Home data base (HDB)	4
4.4	Rerouteing PINX	4
4.5	PUMI-detect PINX	4
4.6	Terminal equipment (TE)	4
4.7	Visitor data base (VDB)	4
5	List of acronyms	4
6	Signalling protocol for the support of ANF-PUMI	5
6.1	ANF-PUMI description	5
6.2	ANF-PUMI operational requirements	5
6.2.1	Requirements on the Rerouteing PINX	5
6.2.2	Requirements on the PUMI-detect PINX	5
6.2.3	Requirements on the Home PINX	5
6.2.4	Requirements on the Visitor PINX	5
6.2.5	Requirements on a Transit PINX	5
6.3	ANF-PUMI coding requirements	6
6.3.1	Operations	6
6.3.2	Information elements	8
6.3.3	Messages	9
6.4	ANF-PUMI state definitions	9
6.4.1	States at the Rerouteing PINX	9
6.4.2	States at the PUMI-detect PINX	9
6.4.3	States at the Home PINX	9
6.4.4	States at the Visitor PINX	9
6.5	ANF-PUMI signalling procedures for invocation and operation	9
6.5.1	Actions at the Rerouteing PINX	9
6.5.2	Actions at the PUMI-detect PINX	10
6.5.3	Actions at the Home PINX	11
6.5.4	Actions at the Visitor PINX	12
6.5.5	Actions at a Transit PINX	12
6.5.6	Actions at an Originating PINX	12
6.6	ANF-PUMI impact of interworking with public ISDNs	12
6.7	ANF-PUMI impact of interworking with non-ISDNs	12
6.8	Protocol interactions between ANF-PUMI and other supplementary services and ANFs	12
6.8.1	Interaction with Calling Name Identification Presentation (SS-CNIP)	13
6.8.2	Interaction with Connected Name Identification Presentation (SS-CONP)	13

© ISO/IEC 2003 – All rights reserved

Copyright International Organization for Standardization
Provided by IHS under license with ISO
No reproduction or networking permitted without license from IHS
Not for Resale

6.8.3 Interaction with Call Completion to Busy Subscriber (SS-CCBS) **13**
6.8.4 Interaction with Call Completion on No Reply (SS-CCNR) **13**
6.8.5 Interaction with Call Transfer (SS-CT) **13**
6.8.6 Interaction with Call Forwarding Unconditional (SS-CFU) **13**
6.8.7 Interaction with Call Forwarding Busy (SS-CFB) **13**
6.8.8 Interaction with Call Forwarding No Reply (SS-CFNR) **13**
6.8.9 Interaction with Call Deflection (SS-CD) **13**
6.8.10 Interaction with Path Replacement (ANF-PR) **13**
6.8.11 Interaction with Call Offer (SS-CO) **13**
6.8.12 Interaction with Call Intrusion (SS-CI) **13**
6.8.13 Interaction with Do Not Disturb (SS-DND) **14**
6.8.14 Interaction with Do Not Disturb Override (SS-DNDO) **14**
6.8.15 Interaction with Advice Of Charge (SS-AOC) **14**
6.8.16 Interaction with Recall (SS-RE) **14**
6.8.17 Interaction with Call Interception (ANF-CINT) **14**
6.8.18 Interaction with Transit Counter (ANF-TC) **14**
6.8.19 Interaction with Route Restriction Class (ANF-RRC) **14**
6.8.20 Interaction with Message Waiting Indication (SS-MWI) **15**
6.8.21 Interaction with Wireless Terminal Location Registration (SS-WTLR) **15**
6.8.22 Interaction with Wireless Terminal Incoming Call (ANF-WTMI) **15**
6.8.23 Interaction with Wireless Terminal Outgoing Call (ANF-WTMO) **16**
6.8.24 Interaction with Wireless Terminal Authentication of the Terminal (SS-WTAT) **16**
6.8.25 Interaction with Wireless Terminal Authentication of the Network (SS-WTAN) **16**
6.8.26 Interaction with Private User Mobility Registration (ANF-PUMR) **16**
6.8.27 Interaction with Private User Mobility Outgoing Call (ANF-PUMO) **16**
6.8.28 Interactions with Common Information (ANF-CMN) **16**
6.8.29 Interaction with Call Priority Interruption (Protection) (SS-CPI(P)) **16**

6.9 ANF-PUMI parameter values (timers) **16**

6.9.1 Timer T1 **16**
6.9.2 Timer T2 **16**

7 Signalling protocol for the support of ANF-PUMO **16**

7.1 ANF-PUMO description **16**
7.2 ANF-PUMO operational requirements **17**

7.2.1 Requirements on the Originating PINX **17**
7.2.2 Requirements on the Home PINX **17**
7.2.3 Requirements on a Transit PINX **17**

7.3 ANF-PUMO coding requirements **17**

7.3.1 Operations **17**
7.3.2 Information elements **17**
7.3.3 Messages **17**

7.4 ANF-PUMO State definitions **17**

7.4.1 States at the Originating PINX **17**
7.4.2 States at the Home PINX **17**

7.5 ANF-PUMO signalling procedures **18**

7.5.1 Actions at the Originating PINX **18**
7.5.2 Actions at the Home PINX **18**
7.5.3 Actions at the Transit PINX **19**

7.6 ANF-PUMO impact of interworking with public ISDNs **19**
7.7 ANF-PUMO impact of interworking with non-ISDNs **19**
7.8 Protocol interactions between ANF-PUMO and other supplementary services and ANFs **19**

© ISO/IEC 2003 – All rights reserved
Copyright International Organization for Standardization
Provided by IHS under license with ISO
No reproduction or networking permitted without license from IHS
Not for Resale

7.8.1 Interaction with Calling Name Identification Presentation (SS-CNIP) **19**
7.8.2 Interaction with Connected Name Identification Presentation (SS-CONP) **19**
7.8.3 Interaction with Call Completion to Busy Subscriber (SS-CCBS) **19**
7.8.4 Interaction with Call Completion on No Reply (SS-CCNR) **19**
7.8.5 Interaction with Call Transfer (SS-WT) **19**
7.8.6 Interaction with Call Diversion (SS-CFU, SS-CFB, SS-CFNR, SS-CD) **19**
7.8.7 Interaction with Path Replacement (ANF-PR) **19**
7.8.8 Interaction with Call Offer (SS-CO) **19**
7.8.9 Interaction with Call Intrusion (SS-CI) **20**
7.8.10 Interaction with Do Not Disturb (SS-DND) **20**
7.8.11 Interaction with Do Not Disturb Override (SS-DNDO) **20**
7.8.12 Interaction with Advice of Charge (SS-AOC) **20**
7.8.13 Interaction with Recall (SS-RE) **20**
7.8.14 Interaction with Call Interception (ANF-CINT) **20**
7.8.15 Interaction with Transit Counter (ANF-TC) **20**
7.8.16 Interaction with Route Restriction Class (ANF-RRC) **20**
7.8.17 Interaction with Message Waiting Indication (SS-MWI) **20**
7.8.18 Interaction with Wireless Terminal Location Registration (SS-WTLR) **20**
7.8.19 Interaction with Wireless Terminal Incoming Call (ANF-WTMI) **20**
7.8.20 Interaction with Wireless Terminal Outgoing Call (ANF-WTMO) **20**
7.8.21 Interaction with Wireless Terminal Authentication of the Terminal (SS-WTAT) **20**
7.8.22 Interaction with Wireless Terminal Authentication of the Network (SS-WTAN) **20**
7.8.23 Interaction with Private User Mobility Registration (ANF-PUMR) **20**
7.8.24 Interaction with Private User Mobility Incoming Call (ANF-PUMI) **20**
7.8.25 Interaction with Common Information (ANF-CMN) **20**
7.8.26 Interaction with Call Priority Interruption (Protection) (SS-CPI(P)) **21**

7.9 Parameter values (timers) **21**

7.9.1 Timers at the Originating PINX **21**
7.9.2 Timers at the Home PINX **21**

Annexes

A - Protocol Implementation Conformance Statement (PICS) proforma **22**

B - Imported ASN.1 definitions **33**

C - Examples of Message Sequences **34**

D - Specification and Description Language (SDL) representation of procedures **39**

E - Additional feature identifier in module Common-Information-Operations **47**

F - ASN.1 definitions according to ITU-T Recs. X.208 / X.209 **48**

© ISO/IEC 2003 – All rights reserved

Copyright International Organization for Standardization
Provided by IHS under license with ISO
No reproduction or networking permitted without license from IHS
Not for Resale

Foreword

ISO (the International Organization for Standardization) and IEC (the International Electrotechnical Commission) form the specialized system for worldwide standardization. National bodies that are members of ISO or IEC participate in the development of International Standards through technical committees established by the respective organization to deal with particular fields of technical activity. ISO and IEC technical committees collaborate in fields of mutual interest. Other international organizations, governmental and non-governmental, in liaison with ISO and IEC, also take part in the work. In the field of information technology, ISO and IEC have established a joint technical committee, ISO/IEC JTC 1.

International Standards are drafted in accordance with the rules given in the ISO/IEC Directives, Part 2.

The main task of the joint technical committee is to prepare International Standards. Draft International Standards adopted by the joint technical committee are circulated to national bodies for voting. Publication as an International Standard requires approval by at least 75 % of the national bodies casting a vote.

Attention is drawn to the possibility that some of the elements of this document may be the subject of patent rights. ISO and IEC shall not be held responsible for identifying any or all such patent rights.

ISO/IEC 17878 was prepared by ECMA (as ECMA-284) and was adopted, under a special “fast-track procedure”, by Joint Technical Committee ISO/IEC JTC 1, *Information technology*, in parallel with its approval by national bodies of ISO and IEC.

This second edition cancels and replaces the first edition (ISO/IEC 17878:2000), which has been technically revised.

© ISO/IEC 2003 – All rights reserved
Copyright International Organization for Standardization
Provided by IHS under license with ISO
No reproduction or networking permitted without license from IHS
Not for Resale

Introduction

This International Standard is one of a series of standards defining services and signalling protocols applicable to Private Integrated Services Networks (PISNs). The series uses ISDN concepts as developed by ITU-T and conforms to the framework of International Standards for Open Systems Interconnection as defined by ISO/IEC.

This International Standard specifies the signalling protocol for use at the Q reference point for Private User Mobility call handling additional network features ANF-PUMI and ANF-PUMO.

This International Standard is based upon the practical experience of ECMA member companies and the results of their active and continuous participation in the work of ISO/IEC JTC 1, ITU-T, ETSI and other international and national standardization bodies. It represents a pragmatic and widely based consensus.

© ISO/IEC 2003 – All rights reserved

Copyright International Organization for Standardization
Provided by IHS under license with ISO
No reproduction or networking permitted without license from IHS
Not for Resale

Copyright International Organization for Standardization
Provided by IHS under license with ISO
No reproduction or networking permitted without license from IHS
Not for Resale

Information technology — Telecommunications and information exchange between systems — Private Integrated Services Network — Inter-exchange signalling protocol — Private User Mobility (PUM) — Call handling additional network features

1 Scope

This International Standard specifies the signalling protocol for the support of the Private User Mobility call handling additional network features (ANF-PUMI and ANF-PUMO) at the Q reference point between Private Integrated services Network eXchanges (PINX) connected together within a Private Integrated Services Network (PISN).

ANF-PUMI is a feature that directs incoming calls to a PUM user within the PISN regardless of the PUM user's geographical location within the PISN, provided that the PUM user's location is known.

ANF-PUMO permits the PISN to process call requests from a PUM user at the home location, if required.

The Q reference point is defined in ISO/IEC 11579-1.

Service specifications are produced in three stages and according to the method specified in ITU-T Rec. I.130. This International Standard contains the stage 3 specification for the Q reference point and satisfies the requirements identified by the stage 1 and stage 2 specifications in ISO/IEC 17877.

The signalling protocol for ANF-PUMI and ANF-PUMO operates on top of the signalling protocol for basic circuit switched call control, as specified in ISO/IEC 11572, and uses certain aspects of the generic procedures for the control of supplementary services specified in ISO/IEC 11582.

This International Standard also specifies additional signalling protocol requirements for the support of interactions at the Q reference point between ANF-PUMI / ANF-PUMO and other supplementary services and ANFs.

This International Standard is applicable to PINXs which can interconnect to form a PISN.

2 Conformance

In order to conform to this International Standard, a PINX shall satisfy the requirements identified in the Protocol Implementation Conformance Statement (PICS) proforma in annex A.

3 Normative references

The following referenced documents are indispensable for the application of this document. For dated references, only the edition cited applies. For undated references, the latest edition of the referenced document (including any amendments) applies.

ISO/IEC 11571:1998, *Information technology - Telecommunications and information exchange between systems - Private Integrated Services Networks - Addressing*

ISO/IEC 11572:2000, *Information technology - Telecommunications and information exchange between systems - Private Integrated Services Network - Circuit mode bearer services - Inter-exchange signalling procedures and protocol*

ISO/IEC 11574:2000, *Information technology - Telecommunications and information exchange between systems - Private Integrated Services Network - Circuit-mode 64 kbit/s bearer services - Service description, functional capabilities and information flows*

ISO/IEC 11579-1:1994, *Information technology - Telecommunications and information exchange between systems - Private integrated services network - Part 1: Reference configuration for PISN Exchanges (PINX)*

ISO/IEC 11582:2002, *Information technology - Telecommunications and information exchange between systems - Private Integrated Services Network - Generic functional protocol for the support of supplementary services - Inter-exchange signalling procedures and protocol*

© ISO/IEC 2003 – All rights reserved

Copyright International Organization for Standardization
Provided by IHS under license with ISO
No reproduction or networking permitted without license from IHS Not for Resale

ISO/IEC 13241:1997, *Information technology - Telecommunications and information exchange between systems - Private Integrated Services Network - Inter-exchange signalling protocol - Route Restriction Class additional network feature*

ISO/IEC 13868:2003, *Information technology - Telecommunications and information exchange between systems - Private Integrated Services Network - Inter-exchange signalling protocol - Name identification supplementary services*

ISO/IEC 13873:2003, *Information technology - Telecommunications and information exchange between systems - Private Integrated Services Network - Inter-exchange signalling protocol - Call Diversion supplementary services*

ISO/IEC 13874:2003, *Information technology - Telecommunications and information exchange between systems - Private Integrated Services Network - Inter-exchange signalling protocol - Path Replacement additional network feature*

ISO/IEC 14843:2003, *Information technology - Telecommunications and information exchange between systems - Private Integrated Services Network - Inter-exchange signalling protocol - Call Offer supplementary service*

ISO/IEC 14844:2003, *Information technology - Telecommunications and information exchange between systems - Private Integrated Services Network - Inter-exchange signalling protocol - Do Not Disturb and Do Not Disturb Override supplementary services*

ISO/IEC 14846:2003, *Information technology - Telecommunications and information exchange between systems - Private Integrated Services Network - Inter-exchange signalling protocol - Call Intrusion supplementary service*

ISO/IEC 15050:2003, *Information technology - Telecommunications and information exchange between systems - Private Integrated Services Network - Inter-exchange signalling protocol - Advice Of Charge supplementary services*

ISO/IEC 15054:2003, *Information technology - Telecommunications and information exchange between systems - Private Integrated Services Network - Inter-exchange signalling protocol - Call Interception additional network feature*

ISO/IEC 15056:1997, *Information technology - Telecommunications and information exchange between systems - Private Integrated Services Network - Inter-exchange signalling protocol - Transit counter additional network feature*

ISO/IEC 15431:2003, *Information technology - Telecommunications and information exchange between systems - Private Integrated Services Network - Inter-exchange signalling protocol - Wireless terminal call handling additional network features*

ISO/IEC 15506:2003, *Information technology - Telecommunications and information exchange between systems - Private Integrated Services Network - Inter-exchange signalling protocol - Message Waiting Indication supplementary service*

ISO/IEC 15772:2003, *Information technology - Telecommunications and information exchange between systems - Private Integrated Services Network - Inter-exchange signalling protocol - Common Information additional network feature*

ISO/IEC 15992:2003, *Information technology - Telecommunications and information exchange between systems - Private Integrated Services Network - Inter-exchange signalling protocol - Call Priority Interruption and Call Priority Interruption Protection supplementary services*

ISO/IEC 17875:2000, *Information technology - Telecommunications and information exchange between systems - Private Integrated Services Network - Specification, functional model and information flows - Private User Mobility (PUM) - Registration supplementary service*

ISO/IEC 17876:2003, *Information technology - Telecommunications and information exchange between systems - Private Integrated Services Network - Inter-exchange signalling protocol - Private User Mobility (PUM) - Registration supplementary service*

ISO/IEC 17877:2000, *Information technology - Telecommunications and information exchange between systems - Private Integrated Services Network - Specification, functional model and information flows - Private User Mobility (PUM) - Call handling additional network features*

ETS 300 415:1996, *Private Integrated Services Network (PISN); Terms and definitions*

ITU-T Rec. I.112:1993, *Vocabulary of terms for ISDNs*

ITU-T Rec. I.130:1988, *Method for the characterization of telecommunication services supported by an ISDN and network capabilities of an ISDN (Blue Book)*

ITU-T Rec. I.210:1993, *Principles of telecommunication services supported by an ISDN and the means to describe them*

ITU-T Rec. Q.850:1993, *Use of cause and location in the digital subscriber Signalling System No. 1 and the Signalling System No. 7 ISDN user part*

© ISO/IEC 2003 – All rights reserved
Copyright International Organization for Standardization
Provided by IHS under license with ISO
No reproduction or networking permitted without license from IHS
Not for Resale

ITU-T Rec. Q.950:2000, *Supplementary services protocols, structure and general principles*

ITU-T Rec. Z.100:1999, *Specification and description language (SDL)*

4 Terms and definitions

For the purposes of this document, the following terms and definitions apply.

4.1 External definitions

This International Standard uses the following terms defined in other documents:

- Additional Network Feature (ANF) (ISO/IEC 11582)
- AllCall registration (ISO/IEC 17875)
- Application Protocol Data Unit (APDU) (ISO/IEC 11582)
- Basic service (ITU-T Rec. I.210)
- Call, Basic call (ISO/IEC 11582)
- Call independent (ISO/IEC 11582)
- Call independent signalling connection (ISO/IEC 11582)
- Call related (ISO/IEC 11582)
- Complete number (ISO/IEC 11571)
- Co-ordination function (ISO/IEC 11582)
- End PINX (ISO/IEC 11582)
- InCall registration (ISO/IEC 17875)
- Incoming Gateway PINX (ISO/IEC 11572)
- Incoming PUM call (ISO/IEC 17877)
- Interpretation APDU (ISO/IEC 11582)
- Home PINX (ISO/IEC 17877)
- Hosting address (ISO/IEC 17877)
- Network Facility Extension (NFE) (ISO/IEC 11582)
- Originating PINX (ISO/IEC 11572)
- Private Integrated Services Network (PISN) (ISO/IEC 11579-1)
- Private Integrated services Network eXchange (PINX) (ISO/IEC 11579-1)
- PISN number (ISO/IEC 11571)
- Signalling (ITU-T Rec. I.112)
- Supplementary service (ITU-T Rec. I.210)
- Supplementary Service Control Entity (ISO/IEC 11582)
- Subsequent PINX (ISO/IEC 11572)
- Terminating PINX (ISO/IEC 11572)
- Transit PINX (ISO/IEC 11572)
- User (ISO/IEC 11574)
- PUM user (ISO/IEC 17877)
- Visitor PINX (ISO/IEC 17877)

4.2 Alternative identifier

An identifier, other than the PISN number, which identifies the PUM user uniquely.

© ISO/IEC 2003 – All rights reserved

Copyright International Organization for Standardization
Provided by IHS under license with ISO
No reproduction or networking permitted without license from IHS
Not for Resale

4.3 Home data base (HDB)

The database in which the data on the current location and associated parameters of a wireless terminal or a mobile user are stored.

4.4 Rerouteing PINX

The PINX which executes the rerouteing of the incoming PUM call to the current Visitor PINX.

NOTE 1 - In case of rerouteing, the Rerouteing PINX is either the Originating PINX or the Incoming Gateway PINX. In case of forward switching, the Rerouteing PINX is the PUMI-detect PINX.

4.5 PUMI-detect PINX

The PINX which detects that an incoming call is to a PUM user.

NOTE 2
The PUMI-detect PINX is either the Home PINX, a Transit PINX, the Incoming Gateway PINX or the Originating PINX.

4.6 Terminal equipment (TE)

An item of equipment attached to a telecommunication network to provide access for a user to one or more services.

4.7 Visitor data base (VDB)

The database in which location information concerning a wireless terminal or a mobile user is stored, as long as the wireless terminal or the mobile user are localized in the corresponding visitor area.

5 List of acronyms

ANF	Additional Network Feature
ANF-CINT	Call Interception additional network feature
ANF-CMN	Common Information additional network feature
ANF-WTMI	Wireless Terminal Incoming call additional network feature
ANF-PR	Path Replacement additional network feature
(ANF-)PUMI	Private User Mobility Incoming Call (additional network feature)
(ANF-)PUMO	Private User Mobility Outgoing Call (additional network feature)
ANF-RRC	Route Restriction Class additional network feature
ANF-TC	Transit counter additional network feature
APDU	Application Protocol Data Unit
ASN.1	Abstract Syntax Notation no. 1
HDB	Home Data Base
ISDN	Integrated Services Digital Network
NFE	Network Facility Extension
PICS	Protocol Implementation Conformance Statement
PINX	Private Integrated services Network eXchange
PISN	Private Integrated Services Network
PUM	Private User Mobility
SDL	Specification and Description Language
SS-AOC	Advice Of Charge supplementary services
SS-CD	Call Deflection supplementary service
SS-CFB	Call Forwarding Busy supplementary service
SS-CFNR	Call Forwarding No Reply supplementary service

© ISO/IEC 2003 – All rights reserved
Copyright International Organization for Standardization
Provided by IHS under license with ISO
No reproduction or networking permitted without license from IHS
Not for Resale

SS-CFU	Call Forwarding Unconditional supplementary service
SS-CI	Call Intrusion supplementary service
SS-CNIP	Calling Name Identification Presentation supplementary service
SS-CO	Call Offer supplementary service
SS-CPI(P)	Call Priority Interruption (Protection) supplementary service
SS-DNDO	Do Not Disturb Override supplementary service
SS-MWI	Message Waiting Indication supplementary service
TE	Terminal Equipment
VDB	Visitor Data Base

6 Signalling protocol for the support of ANF-PUMI

6.1 ANF-PUMI description

ANF-PUMI enables calls to be directed to a PUM user within the PISN. As there is no predetermined PINX for the connection of a PUM user to the PISN, the directing of such calls requires that information regarding the location of the user is available.

6.2 ANF-PUMI operational requirements

6.2.1 Requirements on the Rerouteing PINX

ISO/IEC 11572 protocol control procedures for call establishment at the outgoing side of an inter-PINX link shall apply to the establishment of the connection to the Visitor PINX. ISO/IEC 11572 protocol control procedures for call clearing shall apply to the release of the connection to the PUMI-detect PINX.

Generic procedures for the call related control of supplementary services, as specified in ISO/IEC 11582 for an End PINX, shall apply.

6.2.2 Requirements on the PUMI-detect PINX

ISO/IEC 11572 protocol control procedures for call establishment at the incoming side of an inter-PINX link shall apply to the establishment of the connection from the Originating or Incoming Gateway PINX. ISO/IEC 11572 protocol control procedures for call clearing shall apply to the release of the connection to the Rerouteing PINX.

Generic procedures for the call related control of supplementary services, as specified in ISO/IEC 11582 for an End PINX, shall apply.

Generic procedures for the call independent control (connection oriented) of supplementary services, as specified in ISO/IEC 11582 for an Originating PINX, shall apply.

6.2.3 Requirements on the Home PINX

Generic procedures for the call independent control (connection oriented) of supplementary services, as specified in ISO/IEC 11582 for a Terminating PINX, shall apply.

6.2.4 Requirements on the Visitor PINX

ISO/IEC 11572 protocol control procedures for call establishment at the incoming side of an inter-PINX link shall apply to the establishment of the connection from the Rerouteing PINX.

Generic procedures for the call related control of supplementary services, as specified in ISO/IEC 11582 for an End PINX, shall apply.

6.2.5 Requirements on a Transit PINX

Basic call procedures for call establishment and call clearing at a Transit PINX, as specified in ISO/IEC 11572, shall apply.

Generic procedures for the call related control and call independent control (connection oriented) of supplementary services, as specified in ISO/IEC 11582 for a Transit PINX, shall apply.

© ISO/IEC 2003 – All rights reserved

Copyright International Organization for Standardization
Provided by IHS under license with ISO
No reproduction or networking permitted without license from IHS
Not for Resale

6.3 ANF-PUMI coding requirements

6.3.1 Operations

The operations defined in Abstract Syntax Notation number 1 (ASN.1) in table 1 shall apply. The notation is in accordance with ITU-T Rec. X.680 and X.690. The ITU-T Rec. X.208 and X.209 superseded version is in annex F.

Table 1 - Operations in support of call handling additional network features

```
Private-User-Mobility-Call-Handling-Operations-asn1-97
  { iso (1) standard (0) pss1-pum-call-handling (17878) pum-call-handling-operations-asn1-97 (1)}


DEFINITIONS EXPLICIT TAGS ::=


BEGIN
IMPORTS         OPERATION, ERROR FROM Remote-Operations-Information-Objects
                        { joint-iso-itu-t remote-operations (4) informationObjects (5) version1 (0) }
                EXTENSION, Extension{} FROM Manufacturer-specific-service-extension-class-asn1-97
                        { iso (1) standard (0)
                        pss1-generic-procedures (11582) msi-class-asn1-97(11) }
                PSS1InformationElement FROM PSS1-Generic-parameters-definition-asn1-97
                        { iso (1) standard (0)
                        pss1-generic-procedures (11582) pss1-generic-parameters-asn1-97 (17) }
                Name FROM Name-Operations-asn1-97
                        { iso (1) standard (0)
                        pss1-name (13868) name-operations-asn1-97 (1) }
                basicServiceNotProvided, invalidServedUserNr, notAvailable FROM
                        General-Error-List
                        { ccitt recommendation q 950 general-error-list (1) }
                Address, PartyNumber, PartySubaddress, PresentedNumberScreened FROM
                        Addressing-Data-Elements-asn1-97
                        { iso (1) standard (0) pss1-generic-procedures (11582)
                        addressing-data-elements-asn1-97 (20) };


Private-User-Mobility-Call-Handling--Operations OPERATION ::= { pumiEnquiry | pumiDivert | pumiInform |
pumoCall }


-- Operations for ANF-PUMI: --
pumiEnquiry             OPERATION ::= {
                -- Sent from the PUMI-detect PINX to the Home PINX.
                        ARGUMENT        EnquiryArg
                        RESULT          EnquiryRes
                        ERRORS          { invalidServedUserNr | locationNotKnown |
                                        notAvailable | basicServiceNotProvided | unspecified }
                        CODE            local: 93}
pumiDivert              OPERATION ::= {
                -- Sent from the PUMI-detect PINX to the Rerouteing PINX.
                        ARGUMENT        DivertArg
                        RESULT          DummyRes
                        ERRORS          { notAvailable | unspecified }
                        CODE            local: 94}
```


© ISO/IEC 2003 – All rights reserved
Copyright International Organization for Standardization
Provided by IHS under license with ISO
No reproduction or networking permitted without license from IHS
Not for Resale

Table 1 - Operations in support of call handling additional network features (continued)

```
pumiInform          OPERATION ::= {
                 -- Sent from the Rerouteing PINX to the Visitor PINX.
                    ARGUMENT                InformArg
                    RETURN RESULT           FALSE
                    ALWAYS RESPONDS         FALSE
                    CODE                    local: 95}
EnquiryArg ::=      SEQUENCE    { pisnNumber        PartyNumber,
                                  -- The PISN number of the PUM user
                                  qSIGInfoElement   PSS1InformationElement,
                 -- The basic call information elements Bearer capability, High layer compatibility,
                 -- Low layer compatibility can be embedded in the qSIGInfoElement
                 -- in accordance with clause 6.5.2.1.
                                  argExtension      PumiExtension OPTIONAL }
DivertArg ::=       SEQUENCE    { hostingAddr       PartyNumber,
                                  -- The PISN number of the hosting user,
                                  -- always a Complete Number.
                                  callingNumber     PresentedNumberScreened,
                                  pumIdentity       PumIdentity,
                                  -- The PISN number (always a Complete Number)
                                  -- and/or an alternative identifier of the PUM user.
                                  qSIGInfoElement   PSS1InformationElement,
                 -- The basic call information elements Bearer capability, High layer compatibility,
                 -- Low layer compatibility, and Progress indicator
                 -- can be embedded in the qSIGInfoElement in accordance with clause 6.5.2.1.
                                  callingUserSub    [ 1 ] PartySubaddress OPTIONAL,
                                  callingUserName   [ 2 ] Name OPTIONAL,
                                  pumUserSub        [ 3 ] PartySubaddress OPTIONAL,
                                  argExtension      PumiExtension OPTIONAL }
InformArg ::=       SEQUENCE    { pumIdentity   PumIdentity,
                                  -- The PISN number (always a Complete Number)
                                  -- and/or an alternative identifier of the PUM user.
                                  argExtension      PumiExtension OPTIONAL }
EnquiryRes ::=      CHOICE      { currLocation      [ 1 ] IMPLICIT CurrLocation,
                                  cfuActivated      [ 2 ] IMPLICIT CfuActivated }
CurrLocation ::=    SEQUENCE    { hostingAddr       PartyNumber,
                                  -- The PISN number of the hosting user,
                                  -- always a Complete Number.
                                  pumIdentity       PumIdentity,
                                  -- The PISN number (always a Complete Number)
                                  -- and/or an alternative identifier of the PUM user.
                                  argExtension      PumiExtension OPTIONAL }
CfuActivated ::=    SEQUENCE    { divToAddress      Address,
                                  divOptions        SubscriptionOption,
                                  pumName           [ 1 ] Name OPTIONAL,
                                  argExtension      PumiExtension OPTIONAL }
SubscriptionOption ::=ENUMERATED { noNotification (0),
                                  notificationWithoutDivertedToNr (1),
                                  notificationWithDivertedToNr (2) }
```

© ISO/IEC 2003 – All rights reserved
Copyright International Organization for Standardization
Provided by IHS under license with ISO
No reproduction or networking permitted without license from IHS
Not for Resale

Table 1 - Operations in support of call handling additional network features (concluded)

```
DummyRes ::=        CHOICE                  { null          NULL,
                                              extension     [ 1 ] IMPLICIT Extension{{PUMCHExtSet}},
                                              sequOfExtn    [ 2 ] IMPLICIT SEQUENCE OF
                                                                  Extension{{PUMCHExtSet}} }
PumiExtension ::=   CHOICE                  { extension     [ 4 ] IMPLICIT Extension{{PUMCHExtSet}},
                                              sequOfExtn    [ 5 ] IMPLICIT SEQUENCE OF
                                                                  Extension{{PUMCHExtSet}} }
PumIdentity  ::=    CHOICE                  { pisnNumber    PartyNumber,
                                              alternativeId [ 10 ] IMPLICIT AlternativeId,
                                              both          [ 11 ] IMPLICIT SEQUENCE
                                                            { pisnNumber   PartyNumber,
                                                              alternativeId AlternativeId } }
AlternativeId ::=   OCTET STRING(SIZE(1..20))
-- Operation for ANF-PUMO --
pumoCall            OPERATION ::= {
                    ARGUMENT                PumoArg
                    ALWAYS RESPONDS         FALSE
                    RETURN RESULT           FALSE
                    CODE                    local: 96}
PumoArg ::=         SEQUENCE                { destinationNumber     [0]  PartyNumber  OPTIONAL,
                                              pumIdentity           [1]  PumIdentity  OPTIONAL,
                                              -- The PISN number (always a Complete Number)
                                              -- and/or an alternative identifier of the PUM user.
                                              sendingComplete       [2]  IMPLICIT NULL  OPTIONAL,
                                              extension             CHOICE
                                              {single               [3] IMPLICIT Extension{{PUMCHExtSet}},
                                              multiple              [4] IMPLICIT SEQUENCE OF
                                                                        Extension{{PUMCHExtSet}} }
                                                                        OPTIONAL    }
PUMCHExtSet EXTENSION ::= {...}

locationNotKnown    ERROR       ::=   {     CODE        local: 1015}
unspecified         ERROR       ::=   {     PARAMETER   Extension{{PUMCHExtSet}}
                                          CODE        local: 1008}

END                 -- of Private-User-Mobility-Call-Handling-Operations-asn1-97
```

6.3.2 Information elements

6.3.2.1 Facility information element

The operations defined in 6.3.1 shall be coded in the Facility information element in accordance with ISO/IEC 11582.

When conveying the invoke APDU of operations defined in 6.3.1 the destinationEntity data element of the NFE shall contain value endPINX.

When conveying the invoke APDU of operations defined in 6.3.1, the Interpretation APDU shall either be omitted or be included with value rejectAnyUnrecognisedInvokePdu.

6.3.2.2 Other information elements

Any other information elements (e.g. Calling party number, Called party number) shall be coded in accordance with the rules of ISO/IEC 11572 and ISO/IEC 11582.

© ISO/IEC 2003 – All rights reserved
Copyright International Organization for Standardization
Provided by IHS under license with ISO
No reproduction or networking permitted without license from IHS
Not for Resale

6.3.3 Messages

The Facility information element shall be conveyed in the messages as specified in clause 10 of ISO/IEC 11582.

Messages used for call establishment shall be as specified in ISO/IEC 11572.

6.4 ANF-PUMI state definitions

6.4.1 States at the Rerouteing PINX

The procedures for the Rerouteing PINX are written in terms of the following conceptual states existing within the ANF-PUMI Supplementary Service Control entity in that PINX in association with a particular call.

6.4.1.1 State ExecIdle

Ready for receipt of a pumiDivert APDU.

6.4.2 States at the PUMI-detect PINX

The procedures for the PUMI-detect PINX are written in terms of the following conceptual states existing within the ANF-PUMI Supplementary Service Control entity in that PINX in association with a particular call.

6.4.2.1 State PUMI-Idle

ANF-PUMI is not operating.

6.4.2.2 State PUMI-Detected

A call to a PUM user has been detected and a pumiEnquiry invoke APDU requesting the current location of the PUM user has been sent to the Home PINX.

6.4.2.3 State PUMI-Divert

The current location of the PUM user is known and a pumiDivert invoke APDU has been sent to the Rerouteing PINX.

6.4.3 States at the Home PINX

The procedures for the Home PINX are written in terms of the following conceptual states existing within the ANF-PUMI Supplementary Service Control entity.

6.4.3.1 State HomeIdle

Ready for receipt of a pumiEnquiry APDU.

6.4.4 States at the Visitor PINX

The procedures for the Visitor PINX are written in terms of the following conceptual states existing within the ANF-PUMI Supplementary Service Control entity in that PINX in association with a particular call.

6.4.4.1 State VisitIdle

Ready for receipt of a pumiInform APDU.

6.5 ANF-PUMI signalling procedures for invocation and operation

Examples of message sequences are shown in annex C.

6.5.1 Actions at the Rerouteing PINX

The SDL representation of procedures at the Rerouteing PINX is shown in D.1 of annex D.

6.5.1.1 Normal procedures

On receipt of a pumiDivert invoke APDU in a FACILITY message during basic call protocol control state Outgoing Call Proceeding, the Rerouteing PINX shall determine whether it can proceed with ANF-PUMI. If so, it shall initiate a new call establishment to the Visitor PINX and release the leg towards the PUMI-detect PINX by sending a DISCONNECT message containing a pumiDivert return result APDU.

The SETUP message for the new call establishment shall include a pumiInform invoke APDU.

The following specific basic call information elements shall be included in the SETUP message:

– Called party number, containing the number received in the hostingAddr data element within the pumiDivert invoke APDU;

– Called party subaddress, containing the subaddress received in the pumUserSub data element within the pumiDivert invoke APDU (optional);

© ISO/IEC 2003 – All rights reserved

Copyright International Organization for Standardization
Provided by IHS under license with ISO
No reproduction or networking permitted without license from IHS
Not for Resale

– Calling party number, containing the number received in the callingNumber data element within the pumiDivert invoke APDU;

– Calling party subaddress, containing the subaddress received in the callingUserSub data element within the pumiDivert invoke APDU (optional);

– Bearer capability information element as received in embedded form within the pumiDivert invoke APDU, and any of the following information elements which were also received in embedded form in this APDU: High layer compatibility, Low layer compatibility and Progress indicator information elements.

The pumiInform invoke APDU shall contain the data element pumIdentity with the same contents as the corresponding data element in the argument of the received pumiDivert invoke APDU.

6.5.1.2 Exceptional procedures

If the Rerouteing PINX can not proceed with ANF-PUMI, it shall answer the pumiDivert invoke APDU with a return error APDU containing the error notAvailable.

6.5.2 Actions at the PUMI-detect PINX

The SDL representation of procedures at the PUMI-detect PINX is shown in D.2 of annex D.

When a PUMI-detect PINX also provides Rerouteing PINX functionality, in support of ANF-PUMI by forward switching, the joint requirements of 6.5.1 (for a Rerouteing PINX) and 6.5.2 (for a PUMI-detect PINX) shall apply, with the exception that any communication between the PUMI-detect PINX functionality and the Rerouteing PINX functionality will be an intra-PINX matter. The messages specified for sending from the PUMI-detect PINX towards the Rerouteing PINX or vice versa will not appear on any inter-PINX link.

6.5.2.1 Normal procedures

On determining that ANF-PUMI is to be invoked following the arrival of an incoming call, the PUMI-detect PINX shall send a pumiEnquiry invoke APDU to the Home PINX of the called PUM user, using the call reference of a call independent signalling connection. The call independent signalling connection shall be established (or used, if an appropriate connection is already available) in accordance with the procedures specified in 7.3 of ISO/IEC 11582. The PUMI-detect PINX shall enter state PUMI-Detected and start timer T1.

NOTE 3 - The number to be used in the Called party number information element when establishing the call independent signalling connection to the Home PINX is outside the scope of this International Standard. It can, for example, be the Called party number information element received in the incoming SETUP message.

The following data elements shall be included in the argument of the pumiEnquiry invoke APDU:

– element pisnNumber as received in the incoming SETUP message in the Called party number information element;

– element qSIGInfoElement containing an embedded Bearer capability information element, as received in the incoming SETUP message, and any of the following information elements which were received in the incoming SETUP message: High layer compatibility and Low layer compatibility.

On receipt of the pumiEnquiry return result APDU containing choice currLocation, the PUMI-detect PINX shall stop timer T1, send a pumiDivert invoke APDU in a FACILITY message to the Rerouteing PINX using the call reference of the incoming call, start timer T2 and enter state PUMI-Divert.

The following data elements shall be included in the argument of the pumiDivert invoke APDU:

– element hostingAddr as received in the pumiEnquiry return result APDU;

– element callingNumber as received in the incoming SETUP message in the Calling party number information element;

– element pumIdentity as received in the pumiEnquiry return result APDU;

– element qSIGInfoElement containing an embedded Bearer capability information element, as received in the incoming SETUP message, and any of the following information elements which were received in the incoming SETUP message: High layer compatibility, Low layer compatibility and Progress indicator;

– element callingUserSub, if a Calling party subaddress information element was received in the incoming SETUP message;

– element callingUserName, if a callingName invoke APDU was received in the incoming SETUP message as defined in ISO/IEC 13868 and if CNIP is supported;

© ISO/IEC 2003 – All rights reserved
Copyright International Organization for Standardization
Provided by IHS under license with ISO
No reproduction or networking permitted without license from IHS
Not for Resale

– element pumUserSub, if a Called party subaddress information element was received in the incoming SETUP message.

On receipt of a pumiEnquiry return result APDU containing choice cfuActivated, if the PUMI-detect PINX does not support the procedures of 6.8.6.1 the actions taken shall be an implementation matter, e.g. route the incoming call onwards to the Home PINX or release the incoming call.

The PUMI-detect PINX is responsible for clearing the call independent signalling connection towards the Home PINX. This may occur on receipt of a return result APDU. Alternatively, the signalling connection may be retained for other applications, if appropriate.

On receipt of the pumiDivert return result APDU, the PUMI-detect PINX shall stop timer T2 and enter state PUMI-Idle.

6.5.2.2 Exceptional procedures

On receipt of a pumiEnquiry return error APDU from the Home PINX indicating 'invalidServedUserNr', the PUMI-detect PINX shall stop timer T1, stimulate the sending of a DISCONNECT message with cause value #1 'Unallocated (unassigned) number' for release of the basic call, and enter state PUMI-Idle.

On receipt of a pumiEnquiry return error APDU from the Home PINX indicating 'locationNotKnown', the PUMI-detect PINX shall stop timer T1, stimulate the sending of a DISCONNECT message with cause value #3 'No route to destination' for release of the basic call, and enter state PUMI-Idle.

On receipt of a pumiEnquiry return error APDU from the Home PINX indicating 'notAvailable', the PUMI-detect PINX shall stop timer T1, stimulate the sending of a DISCONNECT message with cause value #20 'Subscriber absent' for release of the basic call, and enter state PUMI-Idle.

On receipt of a pumiEnquiry return error APDU from the Home PINX indicating 'basicServiceNotProvided', the PUMI-detect PINX shall stop timer T1, stimulate the sending of a DISCONNECT message with cause value #88 'Incompatible destination' for release of the basic call, and enter state PUMI-Idle.

On receipt of a pumiEnquiry reject APDU from the Home PINX, the PUMI-detect PINX shall stop timer T1, enter state PUMI-Idle, and continue with normal basic call procedures.

If timer T1 expires (i.e. the pumiEnquiry invoke APDU is not answered by the Home PINX), the PUMI-detect PINX shall enter state PUMI-Idle and either stimulate the sending of a DISCONNECT message with cause value #41 'Temporary failure' for release of the basic call, or continue with normal basic call procedures.

On call clearing during state PUMI-Detected, the PUMI-detect PINX shall stop timer T1 and enter state PUMI-Idle.

On receipt of a pumiDivert return error or reject APDU from the Rerouteing PINX, the PUMI-detect PINX shall stop timer T2, enter state PUMI-Idle, and either stimulate the sending of a DISCONNECT message for release of the basic call, or provide Rerouteing PINX functionality locally by initiating a new call establishment to the Visitor PINX in accordance with 6.5.1.1.

If timer T2 expires (i.e. the pumiDivert invoke APDU is not answered by the Rerouteing PINX), the PUMI-detect PINX shall enter state PUMI-Idle and either stimulate the sending of a DISCONNECT message for release of the basic call, or provide Rerouteing PINX functionality locally by initiating a new call establishment to the Visitor PINX in accordance with 6.5.1.1.

On call clearing during state PUMI-Divert, the PUMI-detect PINX shall stop timer T2 and enter state PUMI-Idle.

The PUMI-detect PINX is responsible for clearing the call independent signalling connection towards the Home PINX. This may occur on receipt of a return error or reject APDU, on expiry of timer T1 or on call clearing during state PUMI-Detect. Alternatively, the signalling connection may be retained for other applications, if appropriate.

6.5.3 Actions at the Home PINX

The SDL representation of procedures at the Home PINX is shown in D.3 of annex D.

When a Home PINX also provides PUMI-detect PINX functionality, in support of ANF-PUMI, the joint requirements of 6.5.2 (for a PUMI-detect PINX) and 6.5.3 (for a Home PINX) shall apply, with the exception that any communication between the Home PINX functionality and the PUMI-detect PINX functionality will be an intra-PINX matter. The messages specified for sending from the Home PINX towards the PUMI-detect PINX or vice versa will not appear on any inter-PINX link.

6.5.3.1 Normal procedures

On receipt of a pumiEnquiry invoke APDU using the call reference of a call independent signalling connection (as specified in 7.3 of ISO/IEC 11582), the Home PINX shall check that the PUM user, as identified by the PISN number in element pisnNumber, is defined in the HDB and that the basic service indicated by the basic call information elements embedded in element qSIGInfoElement is provided to that user.

© ISO/IEC 2003 – All rights reserved

Copyright International Organization for Standardization
Provided by IHS under license with ISO
No reproduction or networking permitted without license from IHS
Not for Resale

If the PUM user is defined in the HDB, and the current location of the PUM user is known for the basic service concerned, then the Home PINX shall answer the pumiEnquiry invoke APDU with a return result APDU containing choice currLocation. Element hostingAddr shall contain the PISN number of the hosting user and element pumIdentity shall contain the PISN number and/or an alternative identifier of the PUM user. The PISN number, if included, shall be in the form of a complete number even if the PISN number received in the invoke APDU was not a complete number.

6.5.3.2 Exceptional procedures

If the PUM user is not found in the HDB, the Home PINX shall answer the pumiEnquiry invoke APDU with a return error APDU containing the error invalidServedUserNr.

If the PUM user has deregistered, the Home PINX shall answer the pumiEnquiry invoke APDU with a return error APDU containing the error notAvailable.

If the current location of the PUM user is unknown, the Home PINX shall answer the pumiEnquiry invoke APDU with a return error APDU containing the error locationNotKnown.

If the requested basic service is not provided, the Home PINX shall answer the pumiEnquiry invoke APDU with a return error APDU containing the error basicServiceNotProvided.

6.5.3.3 Additional procedures for Call Forwarding Unconditional

On receipt of a pumiEnquiry invoke APDU, if the PUM user is defined in the HDB and SS-CFU is active, the Home PINX shall answer the pumiEnquiry invoke APDU with a return result APDU containing choice cfuActivated.

6.5.4 Actions at the Visitor PINX

The SDL representation of procedures at the Visitor PINX is shown in D.4 of annex D.

6.5.4.1 Normal procedures

On receipt of a pumiInform invoke APDU in a SETUP message, the Visitor PINX may check that there is an entry in the VDB for the PUM user, as indicated by the PISN number or alternative identifier in element pumIdentity, for the basic service indicated by basic call information elements. In any case, the Visitor PINX shall attempt to establish the call to the TE that is indicated by the hosting address contained in the Called party number information element, including the pumIdentity in the call request.

6.5.4.2 Exceptional procedures

If the PUM user is not found in the VDB, the Visitor PINX may initiate call clearing according to the procedures in ISO/IEC 11572 with cause value #41 ‘Temporary failure’.

All call failure situations shall be handled according to basic call procedures as specified in ISO/IEC 11572.

6.5.5 Actions at a Transit PINX

There are no special actions required in support of ANF-PUMI.

6.5.6 Actions at an Originating PINX

An Originating PINX shall act as the Rerouteing PINX in accordance with 6.5.1, except where Rerouteing PINX functionality is provided at a separate PUMI-detect PINX.

6.6 ANF-PUMI impact of interworking with public ISDNs

When interworking with a public ISDN which does not support an equivalent feature, the Incoming Gateway PINX shall act as the Rerouteing PINX in accordance with 6.5.1 in order to perform ANF-PUMI within the PISN, except where Rerouteing PINX functionality is provided at a separate PUMI-detect PINX.

6.7 ANF-PUMI impact of interworking with non-ISDNs

When interworking with a non-ISDN which does not support an equivalent feature, the Incoming Gateway PINX shall act as the Rerouteing PINX in accordance with 6.5.1 in order to perform ANF-PUMI within the PISN, except where Rerouteing PINX functionality is provided at a separate PUMI-detect PINX.

6.8 Protocol interactions between ANF-PUMI and other supplementary services and ANFs

This clause specifies protocol interactions with other supplementary services and ANFs for which stage 3 standards had been published at the time of publication of this International Standard. For interactions with supplementary services and ANFs for which stage 3 standards are published subsequent to the publication of this International Standard, see those other stage 3 standards.

© ISO/IEC 2003 – All rights reserved
Copyright International Organization for Standardization
Provided by IHS under license with ISO
No reproduction or networking permitted without license from IHS
Not for Resale

NOTE 4 - Additional interactions that have no impact on the signalling protocol at the Q reference point can be found in the relevant stage 1 specifications.

NOTE 5 - Simultaneous conveyance of APDUs for ANF-PUMI and other supplementary services or ANFs in the same message, each in accordance with the requirements of its respective stage 3 standard, does not, on its own, constitute a protocol interaction.

6.8.1 Interaction with Calling Name Identification Presentation (SS-CNIP)

The following interaction shall apply if SS-CNIP is supported in accordance with ISO/IEC 13868.

6.8.1.1 Actions at the Rerouteing PINX

When executing ANF-PUMI, the Rerouteing PINX shall include a callingName invoke APDU in the SETUP message to the Visitor PINX if this was included in the original SETUP message to the PUMI-detect PINX.

6.8.2 Interaction with Connected Name Identification Presentation (SS-CONP)

No protocol interaction.

6.8.3 Interaction with Call Completion to Busy Subscriber (SS-CCBS)

No protocol interaction.

6.8.4 Interaction with Call Completion on No Reply (SS-CCNR)

No protocol interaction.

6.8.5 Interaction with Call Transfer (SS-CT)

No protocol interaction.

6.8.6 Interaction with Call Forwarding Unconditional (SS-CFU)

The following interaction shall apply if SS-CFU is supported in accordance with ISO/IEC 13873.

6.8.6.1 Actions at the PUMI-detect PINX

On receipt of a pumiEnquiry return result APDU containing choice cfuActivated, the PUMI-detect PINX shall stop timer T1 and act as the Served User PINX for SS-CFU in accordance with 6.5.4 of ISO/IEC 13873.

The PUMI-detect PINX is responsible for clearing the call independent signalling connection towards the Home PINX. This may occur on receipt of a return result APDU. Alternatively, the signalling connection may be retained for other applications, if appropriate.

6.8.7 Interaction with Call Forwarding Busy (SS-CFB)

No protocol interaction.

6.8.8 Interaction with Call Forwarding No Reply (SS-CFNR)

No protocol interaction.

6.8.9 Interaction with Call Deflection (SS-CD)

No protocol interaction.

6.8.10 Interaction with Path Replacement (ANF-PR)

No protocol interaction.

6.8.11 Interaction with Call Offer (SS-CO)

The following interaction shall apply if SS-CO is supported in accordance with ISO/IEC 14843.

6.8.11.1 Actions at the Rerouteing PINX

When executing ANF-PUMI, the Rerouteing PINX shall act as follows:

- include a callOfferRequest invoke APDU in the SETUP message to the Visitor PINX if this was included in the original SETUP message to the PUMI-detect PINX;
- include a pathRetain invoke APDU with callOffer bit set to ONE in the SETUP message to the Visitor PINX if this was included in the original SETUP message to the PUMI-detect PINX.

6.8.12 Interaction with Call Intrusion (SS-CI)

The following interaction shall apply if SS-CI is supported in accordance with ISO/IEC 14846.

© ISO/IEC 2003 – All rights reserved

Copyright International Organization for Standardization
Provided by IHS under license with ISO
No reproduction or networking permitted without license from IHS
Not for Resale

6.8.12.1 Actions at the Rerouteing PINX

When executing ANF-PUMI, the Rerouteing PINX shall act as follows:

– include a callIntrusionRequest invoke APDU in the SETUP message to the Visitor PINX if this was included in the original SETUP message to the PUMI-detect PINX;

– include a pathRetain invoke APDU with bit ci-low, ci-medium or ci-high set to ONE in the SETUP message to the Visitor PINX if this was included in the original SETUP message to the PUMI-detect PINX.

6.8.13 Interaction with Do Not Disturb (SS-DND)

No protocol interaction.

6.8.14 Interaction with Do Not Disturb Override (SS-DNDO)

The following interaction shall apply if SS-DNDO is supported in accordance with ISO/IEC 14844.

6.8.14.1 Actions at the Rerouteing PINX

When executing ANF-PUMI, the Rerouteing PINX shall act as follows:

– include a doNotDisturbOverrideQ invoke APDU in the SETUP message to the Visitor PINX if this was included in the original SETUP message to the PUMI-detect PINX;

– include a pathRetain invoke APDU with bit dndo-low, dndo-medium or dndo-high set to ONE in the SETUP message to the Visitor PINX if this was included in the original SETUP message to the PUMI-detect PINX.

6.8.15 Interaction with Advice Of Charge (SS-AOC)

The following interaction shall apply if SS-AOC is supported in accordance with ISO/IEC 15050.

6.8.15.1 Actions at the Rerouting PINX

When executing ANF-PUMI, the Rerouteing PINX shall include a chargeRequest invoke APDU in the SETUP message to the Visitor PINX if this was included in the original SETUP message to the PUMI-detect PINX.

On receipt of a pumiDivert invoke APDU for a call independent signalling connection which conveys an aocFinal invoke APDU, the Rerouteing PINX shall act in accordance to 6.5.1, except that the basic call procedures are replaced by the corresponding procedures for call independent signalling connections as specified in ISO/IEC 11582 clause 7.3, and shall include the aocFinal invoke APDU of the original received in the SETUP message sent to the Visitor PINX.

6.8.15.2 Actions at the PUMI-detect PINX

On receipt of a SETUP message for a call independent signalling connection which conveys an aocFinal invoke APDU, the PUMI-detect PINX shall act in accordance to 6.5.2, except that the basic call procedures are replaced by the corresponding procedures for call independent signalling connections as specified in ISO/IEC 11582 clause 7.3.

6.8.15.3 Actions at the Visitor PINX

On receipt of a SETUP message for a call independent signalling connection which conveys an aocFinal invoke APDU and a pumiInform invoke APDU, the joint requirements of 6.5.4, except that the basic call procedures are replaced by the corresponding procedures for call independent signalling connections as specified in ISO/IEC 11582 clause 7.3, and 6.9.3.1 of ISO/IEC 15050 for an Originating PINX shall apply.

6.8.16 Interaction with Recall (SS-RE)

No protocol interaction.

6.8.17 Interaction with Call Interception (ANF-CINT)

No protocol interaction.

6.8.18 Interaction with Transit Counter (ANF-TC)

The following interaction shall apply if ANF-TC is supported in accordance with ISO/IEC 15056.

6.8.18.1 Actions at the Rerouteing PINX

When executing ANF-PUMI, the Rerouteing PINX may include a Transit counter information element in the SETUP message to the Visitor PINX. The value of the transit count field shall be zero.

6.8.19 Interaction with Route Restriction Class (ANF-RRC)

The following interaction shall apply if ANF-RRC is supported in accordance with ISO/IEC 13241.

© ISO/IEC 2003 – All rights reserved
Copyright International Organization for Standardization
Provided by IHS under license with ISO
No reproduction or networking permitted without license from IHS
Not for Resale

6.8.19.1 Actions at the Rerouteing PINX

When executing ANF-PUMI, the Rerouteing PINX shall include a routeRestrictionClass invoke APDU in the SETUP message to the Visitor PINX if this was included in the original SETUP message to the PUMI-detect PINX. The element rac shall be the Route Access Class of either the calling user or the PUM user.

6.8.19.2 Actions at the PUMI-detect PINX

The PUMI-detect PINX may include a routeRestrictionClass invoke APDU received from the Home PINX, with element rac containing the Route Access Class of the PUM user, together with the pumiDivert invoke APDU in the FACILITY message to the Rerouteing PINX.

6.8.19.3 Actions at the Home PINX

The Home PINX may include a routeRestrictionClass invoke APDU, with element rac containing the Route Access Class of the PUM user, together with the pumiEnquiry return result APDU in the message to the PUMI-detect PINX.

6.8.20 Interaction with Message Waiting Indication (SS-MWI)

The following interaction shall apply in case of an active InCall or AllCall registration if SS-MWI is supported in accordance with ISO/IEC 15506.

6.8.20.1 Actions at the Rerouteing PINX

On receipt of a pumiDivert invoke APDU using the call reference of a call independent signalling connection which conveys a mwiActivate or mwiDeactivate invoke APDU, the Rerouteing PINX shall act in accordance with 6.5.1, except that basic call procedures are replaced by the corresponding procedures for call independent signalling connections as specified in ISO/IEC 11582 clause 7.3, and include the mwiActivate / mwiDeactivate invoke APDU in the SETUP message sent to the Visitor PINX.

6.8.20.2 Actions at the PUMI-detect PINX

On receipt of a SETUP message for a call independent signalling connection containing a mwiActivate or mwiDeactivate invoke APDU the PUMI-detect PINX may act in accordance with 6.5.2, except that basic call procedures are replaced by the corresponding procedures for call independent signalling connections as specified in ISO/IEC 11582 clause 7.3.

NOTE 6 - If the PUMI-detect PINX does not act on an incoming mwiActivate or mwiDeactivate invoke APDU the APDU will pass through to the Home PINX.

6.8.20.3 Actions at the Home PINX

On receipt of a SETUP message using the call reference of a call independent signalling connection and containing a mwiActivate or mwiDeactivate invoke APDU, the Home PINX may forward the mwiActivate / mwiDeactivate invoke APDU to the Visitor PINX, using a call independent signalling connection. The Home PINX shall also forward to the Message Centre PINX any mwiActivate / mwiDeactivate return result, return error or reject APDU subsequently returned by the Visitor PINX.

NOTE 7 - Other actions, e.g. recording the status of SS-MWI for the PUM user, are outside the scope of this International Standard.

6.8.20.4 Actions at the Visitor PINX

The Visitor PINX shall act as the SS-MWI Served User PINX for a visiting PUM user which is also a served user of SS-MWI.

NOTE 8 - A message waiting indication may be lost if the PUM user moves or has moved to another location.

6.8.21 Interaction with Wireless Terminal Location Registration (SS-WTLR)

No protocol interaction.

6.8.22 Interaction with Wireless Terminal Incoming Call (ANF-WTMI)

The following interaction shall apply if ANF-WTMI is supported in accordance with ISO/IEC 15431.

6.8.22.1 Actions at the WTMI Rerouteing PINX

If a call is routed by means of ANF-WTMI and if the received SETUP message contained a pumiInform invoke APDU, the WTMI Rerouteing PINX shall include the pumiInform invoke APDU in the SETUP message to the Visitor PINX, in addition to the wtmiInform invoke APDU.

6.8.22.2 Actions at the Visitor PINX

In addition to normal ANF-WTMI procedures the Visitor PINX shall include the pumIdentity in the call request to the current access of the PUM/WTM user.

--`,,`-`-`,,`,,`,`,,`---

© ISO/IEC 2003 – All rights reserved

Copyright International Organization for Standardization
Provided by IHS under license with ISO
No reproduction or networking permitted without license from IHS
Not for Resale

6.8.23 Interaction with Wireless Terminal Outgoing Call (ANF-WTMO)

No protocol interaction.

6.8.24 Interaction with Wireless Terminal Authentication of the Terminal (SS-WTAT)

No protocol interaction.

6.8.25 Interaction with Wireless Terminal Authentication of the Network (SS-WTAN)

No protocol interaction.

6.8.26 Interaction with Private User Mobility Registration (ANF-PUMR)

No protocol interaction.

6.8.27 Interaction with Private User Mobility Outgoing Call (ANF-PUMO)

The following interaction shall apply if ANF-PUMO is supported in accordance with clause 7.

6.8.27.1 Actions at the PUMI-detect PINX

If a SETUP message contains a pumoCall invoke APDU then ANF-PUMI shall not be invoked on this call.

6.8.28 Interactions with Common Information (ANF-CMN)

The following interaction shall apply if ANF-CMN is supported in accordance with ISO/IEC 15772.

6.8.28.1 Actions at the Rerouteing PINX

When executing ANF-PUMI, the Rerouteing PINX shall include a cmnRequest invoke APDU (for the ANF-CMN solicited service) or a cmnInform invoke APDU (for the unsolicited service) in the SETUP message to the Visitor PINX if this was included in the SETUP message to the PUMI-detect PINX.

6.8.29 Interaction with Call Priority Interruption (Protection) (SS-CPI(P))

The following interaction shall apply if SS-CPI(P) is supported in accordance with ISO/IEC 15992.

6.8.29.1 Actions at the Rerouteing PINX

On receiving a pumiDivert invoke APDU, the Rerouteing PINX shall include in the SETUP message sent to the Visitor PINX any callInterruptionRequest invoke APDU or callProtectionRequest invoke APDU accompanying the pumiDivert invoke APDU.

6.8.29.2 Actions at the PUMI-detect PINX

If the incoming call for which ANF-PUMI is to be invoked contains a callInterruptionRequest invoke APDU or a callProtectionRequest invoke APDU, the PUMI-detect PINX shall include these APDUs with the pumiDivert invoke APDU in the FACILITY message sent to the Rerouteing PINX.

6.9 ANF-PUMI parameter values (timers)

6.9.1 Timer T1

Timer T1 operates at the PUMI-detect PINX during state PUMI-Detected. Its purpose is to protect against the absence of a response to the pumiEnquiry invoke APDU.

Timer T1 shall have a value not less than 15 s.

6.9.2 Timer T2

Timer T2 operates at the PUMI-detect PINX during state PUMI-Divert. Its purpose is to protect against the absence of a response to the pumiDivert invoke APDU.

Timer T2 shall have a value not less than 15 s.

7 Signalling protocol for the support of ANF-PUMO

7.1 ANF-PUMO description

ANF-PUMO permits the PISN to optionally process call requests from a PUM user at the home location, if required.

NOTE 9 - Further actions that may be performed at the visited location - verification of the PUM user's identity, local access to the service profile, local call processing - are outside the scope of this International Standard.

© ISO/IEC 2003 – All rights reserved
Copyright International Organization for Standardization
Provided by IHS under license with ISO
No reproduction or networking permitted without license from IHS
Not for Resale

7.2 ANF-PUMO operational requirements

7.2.1 Requirements on the Originating PINX

Call establishment procedures for the outgoing side of an inter-PINX link and call release procedures, as specified in ISO/IEC 11572, shall apply.

Generic procedures for the call related control of supplementary services, as specified in ISO/IEC 11582 for an End PINX, shall apply.

7.2.2 Requirements on the Home PINX

Call establishment procedures for the incoming and outgoing side of an inter-PINX link and call release procedures, as specified in ISO/IEC 11572, shall apply.

Generic procedures for the call related control of supplementary services, as specified in ISO/IEC 11582 for an End PINX, shall apply.

7.2.3 Requirements on a Transit PINX

Basic call procedures for call establishment and call clearing at a Transit PINX, as specified in ISO/IEC 11572, shall apply.

Generic procedures for the call related control of supplementary services, as specified in ISO/IEC 11582 for a Transit PINX, shall apply.

7.3 ANF-PUMO coding requirements

7.3.1 Operations

The operation pumoCall defined in Abstract Syntax Notation number 1 (ASN.1) in 6.3.1, table 1, shall apply.

7.3.2 Information elements

7.3.2.1 Facility information element

The operation defined in 7.3.1 shall be coded in the Facility information element in accordance with ISO/IEC 11582.

The Facility information element shall always contain an NFE with the destinationEntity element having value endPINX.

A Facility information element conveying a pumoCall invoke APDU shall also contain an Interpretation APDU with value clearCallIfAnyInvokePduNotRecognised. If sent in a FACILITY message, the Interpretation APDU shall either be omitted or included with value rejectAnyUnrecognisedInvokePdu.

7.3.2.2 Other information elements

Any other information elements (e.g. Calling party number, Called party number) shall be coded in accordance with the rules of ISO/IEC 11572 and ISO/IEC 11582.

7.3.3 Messages

The Facility information element shall be conveyed in the messages as specified in clause 10 of ISO/IEC 11582.

7.4 ANF-PUMO State definitions

7.4.1 States at the Originating PINX

The procedures for the Originating PINX are written in terms of the following conceptual states existing within the ANF-PUMO Supplementary Service Control entity in that PINX in association with a particular PUMO Request.

7.4.1.1 PUMO-Idle

ANF-PUMO is not operating.

7.4.2 States at the Home PINX

The procedures for the Home PINX are written in terms of the following conceptual states existing within the ANF-PUMO Supplementary Service Control entity in that PINX in association with a particular PUMO Request.

7.4.2.1 PUMO-Idle

Ready for receipt of a pumoCall invoke APDU.

7.4.2.2 PUMO-Await-Info

Further address information can be received in overlap mode.

© ISO/IEC 2003 – All rights reserved

Copyright International Organization for Standardization
Provided by IHS under license with ISO
No reproduction or networking permitted without license from IHS
Not for Resale

7.5 ANF-PUMO signalling procedures

Examples of message sequences are shown in annex C.

7.5.1 Actions at the Originating PINX

The SDL representation of procedures at the Originating PINX is shown in D.5 of annex D.

7.5.1.1 Normal procedures

If the Originating PINX decides to pass to the Home PINX for processing a call request that was initiated by the PUM user, the Originating PINX shall send a SETUP message according to ISO/IEC 11572 to the Home PINX. The SETUP message shall contain a pumoCall invoke APDU, in the Calling party number information element the number of the PUM user if available, and in the Called party number information element a number sufficient to route to the PUM user's Home PINX. If the PUM user's number is not available, the alternative identifier shall be included in the element pumIdentity of the invoke APDU's argument. If (part of) the intended destination number is already available it shall be included in element destinationNumber of the invoke APDU's argument. If the destination number is complete, element sendingComplete may also be included in the argument.

NOTE 10 - The number to be used in the Called party number information element is outside the scope of this International Standard. It could, for example, be the number of the PUM user.

Subsequently, if the destination number sent in the SETUP message was not complete, additional address information from the PUM user shall be included in the argument of pumoCall invoke APDUs, which shall be sent to the Home PINX in FACILITY messages, with the digit(s) encoded in element destinationNumber. The end of number information transmission may be indicated to the Home PINX by means of a sendingComplete element.

7.5.1.2 Exceptional procedures

Not applicable.

7.5.2 Actions at the Home PINX

The SDL representation of procedures at the Home PINX is shown in D.6 of annex D.

7.5.2.1 Normal procedures

If on receipt of a SETUP message with a pumoCall invoke APDU enough digits of the destination number are present in the argument of the APDU to select a route for call extension, the Home PINX shall initiate call establishment towards the intended destination in accordance with ISO/IEC 11572 and join the two call legs. If the PUM user's number is not included in the Calling Party element of the received SETUP message, the alternative identifier from the element pumIdentity in the invoke APDU argument may be used to determine the PUM user's number before attempting to establish a call towards the intended destination number. If the destination number is not complete, the Home PINX shall enter state PUMO-Await-Info, optionally send a PROGRESS message with progress description number 8 to the Originating PINX to stop T310 at Transit PINXs, and start timer T3. Otherwise it shall remain in state PUMO-Idle.

NOTE 11 - The only purpose of this progress description is to stop timer T310. It does not mean that in-band information is necessarily provided.

While in state PUMO-Await-Info, additional number information received as argument of pumoCall invoke APDUs in a FACILITY message shall be used to select a route for call extension or, if the call has already been extended, passed on to the Subsequent PINX in accordance with ISO/IEC 11572. If the Home PINX regards the number information complete it shall stop timer T3, initiate call establishment towards the intended destination in accordance with ISO/IEC 11572 if not already done, join the two call legs, and return to state PUMO-Idle. Otherwise it shall restart timer T3 and stay in state PUMO-Await-Info.

If a sendingComplete element is contained in a pumoCall invoke APDU received while in state PUMO-Await-Info, the Home PINX shall process any number information present in the argument, stop timer T3, initiate call establishment towards the intended destination in accordance with ISO/IEC 11572 if not already done, join the two call legs, and return to state PUMO-Idle.

7.5.2.2 Exceptional procedures

If timer T3 expires the Home PINX shall return to state PUMO-Idle and

– if the number information received so far is considered sufficient, initiate call establishment towards the intended destination in accordance with ISO/IEC 11572, if not already done, and join the two call legs;

– if the information is not sufficient to proceed, initiate call clearing with an appropriate cause value, e.g. #28 'invalid number format (address incomplete)'.

--`,,`-`-`,,`,,`,`,,`---

© ISO/IEC 2003 – All rights reserved
Copyright International Organization for Standardization
Provided by IHS under license with ISO
No reproduction or networking permitted without license from IHS
Not for Resale

A pumoCall invoke APDU received in a FACILITY message while in state PUMO-Idle shall be ignored.

7.5.3 Actions at the Transit PINX

No special actions are required for ANF-PUMO.

7.6 ANF-PUMO impact of interworking with public ISDNs

Not applicable.

7.7 ANF-PUMO impact of interworking with non-ISDNs

Not applicable.

7.8 Protocol interactions between ANF-PUMO and other supplementary services and ANFs

This clause specifies protocol interactions with other supplementary services and ANFs for which stage 3 standards had been published at the time of publication of this International Standard. For interactions with supplementary services and ANFs for which stage 3 standards are published subsequent to the publication of this International Standard, see those other stage 3 standards.

NOTE 12 - Additional interactions that have no impact on the signalling protocol at the Q reference point can be found in the relevant stage 1 specifications.

NOTE 13 - Simultaneous conveyance of APDUs for ANF-PUMO and another supplementary service or ANF in the same message, each in accordance with the requirements of its respective stage 3 standard, does not, on its own, constitute a protocol interaction.

NOTE 14 - The transmission of a Facility information element on one leg as a result of receiving a Facility information element on the other leg does not constitute a protocol interaction.

NOTE 15 - If the Home PINX acts as the Originating PINX with regards to supplementary services is outside the scope of this International Standard.

7.8.1 Interaction with Calling Name Identification Presentation (SS-CNIP)

The following interaction shall apply if SS-CNIP is supported in accordance with ISO/IEC 13868.

7.8.1.1 Actions at the Home PINX

The Home PINX may include a callingName invoke APDU in the SETUP message, indicating the name of the PUM user.

7.8.2 Interaction with Connected Name Identification Presentation (SS-CONP)

No protocol interaction.

7.8.3 Interaction with Call Completion to Busy Subscriber (SS-CCBS)

No protocol interaction.

7.8.4 Interaction with Call Completion on No Reply (SS-CCNR)

No protocol interaction.

7.8.5 Interaction with Call Transfer (SS-WT)

No protocol interaction.

7.8.6 Interaction with Call Diversion (SS-CFU, SS-CFB, SS-CFNR, SS-CD)

The following interaction shall apply if call diversion is supported in accordance with ISO/IEC 13873.

7.8.6.1 Actions at the Home PINX

On receipt of a callRerouting invoke APDU the Home PINX may act as the Rerouting PINX.

7.8.7 Interaction with Path Replacement (ANF-PR)

The following interaction shall apply if ANF-PR is supported in accordance with ISO/IEC 13874.

7.8.7.1 Actions at the Home PINX

The Home PINX may act as the Cooperating PINX when receiving a prPropose invoke APDU from either side.

7.8.8 Interaction with Call Offer (SS-CO)

No protocol interaction.

© ISO/IEC 2003 – All rights reserved

Copyright International Organization for Standardization
Provided by IHS under license with ISO
No reproduction or networking permitted without license from IHS
Not for Resale

7.8.9 Interaction with Call Intrusion (SS-CI)

No protocol interaction.

7.8.10 Interaction with Do Not Disturb (SS-DND)

No protocol interaction.

7.8.11 Interaction with Do Not Disturb Override (SS-DNDO)

No protocol interaction.

7.8.12 Interaction with Advice of Charge (SS-AOC)

No protocol interaction.

7.8.13 Interaction with Recall (SS-RE)

No protocol interaction.

7.8.14 Interaction with Call Interception (ANF-CINT)

The following interaction shall apply if ANF-CINT is supported in accordance with ISO/IEC 15054.

7.8.14.1 Actions at the Home PINX

The Home PINX may act as Intercepting PINX.

7.8.15 Interaction with Transit Counter (ANF-TC)

The following interaction shall apply if ANF-TC is supported in accordance with ISO/IEC 15056.

7.8.15.1 Actions at the Home PINX

When executing ANF-PUMO, the Home PINX may include a Transit counter information element in the SETUP message.

7.8.16 Interaction with Route Restriction Class (ANF-RRC)

The following interaction shall apply if ANF-RRC is supported in accordance with ISO/IEC 13241.

7.8.16.1 Actions at the Home PINX

When executing ANF-PUMO, the Home PINX may include a routeRestrictionClass invoke APDU in the SETUP message, indicating the Route Access Class of the PUM user.

7.8.17 Interaction with Message Waiting Indication (SS-MWI)

No protocol interaction.

7.8.18 Interaction with Wireless Terminal Location Registration (SS-WTLR)

No protocol interaction.

7.8.19 Interaction with Wireless Terminal Incoming Call (ANF-WTMI)

No protocol interaction.

7.8.20 Interaction with Wireless Terminal Outgoing Call (ANF-WTMO)

No protocol interaction.

7.8.21 Interaction with Wireless Terminal Authentication of the Terminal (SS-WTAT)

No protocol interaction.

7.8.22 Interaction with Wireless Terminal Authentication of the Network (SS-WTAN)

No protocol interaction.

7.8.23 Interaction with Private User Mobility Registration (ANF-PUMR)

No protocol interaction.

7.8.24 Interaction with Private User Mobility Incoming Call (ANF-PUMI)

This interaction is specified in 6.8.27.

7.8.25 Interaction with Common Information (ANF-CMN)

No protocol interaction.

© ISO/IEC 2003 – All rights reserved
Copyright International Organization for Standardization
Provided by IHS under license with ISO
No reproduction or networking permitted without license from IHS
Not for Resale

7.8.26 Interaction with Call Priority Interruption (Protection) (SS-CPI(P))

No protocol interaction.

7.9 Parameter values (timers)

7.9.1 Timers at the Originating PINX

None.

7.9.2 Timers at the Home PINX

T3 Information receiving

This timer is started on receipt of the first pumoCall invoke APDU with incomplete number information, restarted on receipt of a further pumoCall invoke APDU with incomplete number information, and stopped when a pumoCall invoke APDU containing final number information or an element sendingComplete is received from the Originating PINX or an ALERTING or CONNECT message is received from the Terminating PINX.

On expiry of timer T3 the call is either cleared or proceeds as normal basic call.

The value of timer T3 should be in the range 14 - 16 seconds.

© ISO/IEC 2003 – All rights reserved

Copyright International Organization for Standardization
Provided by IHS under license with ISO
No reproduction or networking permitted without license from IHS
Not for Resale

Annex A
(normative)

Protocol Implementation Conformance Statement (PICS) proforma

A.1 Introduction

The supplier of a protocol implementation which is claimed to conform to this International Standard shall complete the following Protocol Implementation Conformance Statement (PICS) proforma.

A completed PICS proforma is the PICS for the implementation in question. The PICS is a statement of which capabilities and options of the protocol have been implemented. The PICS can have a number of uses, including use:

- by the protocol implementor, as a check list to reduce the risk of failure to conform to the Standard through oversight;
- by the supplier and acquirer, or potential acquirer, of the implementation, as a detailed indication of the capabilities of the implementation, stated relative to the common basis for understanding provided by the Standard's PICS proforma;
- by the user or potential user of the implementation, as a basis for initially checking the possibility of interworking with another implementation - while interworking can never be guaranteed, failure to interwork can often be predicted from incompatible PICS's.
- by a protocol tester, as the basis for selecting appropriate tests against which to assess the claim for conformance of the implementation.

A.2 Instructions for completing the PICS proforma

A.2.1 General structure of the PICS proforma

The PICS proforma is a fixed format questionnaire divided into subclauses each containing a group of individual items. Each item is identified by an item number, the name of the item (question to be answered), and the reference(s) to the clause(s) specifying the item in the main body of this International Standard.

The "Status" column indicates whether an item is applicable and if so whether support is mandatory or optional. The following terms are used:

m	mandatory (the capability is required for conformance to the protocol);
o	optional (the capability is not required for conformance to the protocol, but if the capability is implemented it is required to conform to the protocol specifications);
o.<n>	optional, but support of at least one of the group of options labelled by the same numeral <n> is required;
x	prohibited;
c.<cond>	conditional requirement, depending on support for the item or items listed in condition <cond>;
<item>:m	simple conditional requirement, the capability being mandatory if item number <item> is supported, otherwise not applicable;
<item>:o	simple conditional requirement, the capability being optional if item number <item> is supported, otherwise not applicable.

Answers to the questionnaire items are to be provided either in the "Support" column, by simply marking an answer to indicate a restricted choice (Yes or No), or in the "Not Applicable" column (N/A).

© ISO/IEC 2003 – All rights reserved
Copyright International Organization for Standardization
Provided by IHS under license with ISO
No reproduction or networking permitted without license from IHS
Not for Resale

A.2.2 Additional information

Items of Additional Information allow a supplier to provide further information intended to assist the interpretation of the PICS. It is not intended or expected that a large quantity will be supplied, and a PICS can be considered complete without any such information. Examples might be an outline of the ways in which a (single) implementation can be set up to operate in a variety of environments and configurations.

References to items of Additional Information may be entered next to any answer in the questionnaire, and may be included in items of Exception information.

A.2.3 Exception information

It may occasionally happen that a supplier will wish to answer an item with mandatory or prohibited status (after any conditions have been applied) in a way that conflicts with the indicated requirement. No pre-printed answer will be found in the Support column for this. Instead, the supplier is required to write into the Support column an x.<i> reference to an item of Exception Information, and to provide the appropriate rationale in the Exception item itself.

An implementation for which an Exception item is required in this way does not conform to this International Standard. A possible reason for the situation described above is that a defect in the Standard has been reported, a correction for which is expected to change the requirement not met by the implementation.

© ISO/IEC 2003 – All rights reserved

Copyright International Organization for Standardization
Provided by IHS under license with ISO
No reproduction or networking permitted without license from IHS
Not for Resale

A.3 PICS proforma for ANF-PUMI

A.3.1 Implementation Identification

Supplier	
Contact point for queries about the PICS	
Implementation Name(s) and Version(s)	
Other information necessary for full identification, e.g., name(s) and version(s) for machines and/or operating systems; system name(s)	

Only the first three items are required for all implementations; other information may be completed as appropriate in meeting the requirement for full identification.

The terms Name and Version should be interpreted appropriately to correspond with a supplier's terminology (e.g., Type, Series, Model).

A.3.2 Protocol Summary

Protocol Version	1.0
Addenda Implemented (if applicable)	
Amendments Implemented	
Have any exception items been required (see A.2.3) ?	No [ ] Yes [ ] (The answer YES means that the implementation does not conform to this International Standard)

Date of Statement	

--`,,,`-`-`,,`,,`,`,,`---
© ISO/IEC 2003 – All rights reserved
Copyright International Organization for Standardization
Provided by IHS under license with ISO
No reproduction or networking permitted without license from IHS
Not for Resale

A.3.3 General

Item	Question/feature	References	Status	N/A	Support
A1	Support of ANF-PUMI, call rerouteing		o.1		Yes [ ] No [ ]
A2	Support of ANF-PUMI, forward switching		o.1		Yes [ ] No [ ]
A3	Behaviour as PUMI-detect PINX		c.1	[ ]	o: Yes [ ] No [ ]
A4	Behaviour as Home PINX for ANF-PUMI		c.1	[ ]	o: Yes [ ] No [ ]
A5	Behaviour as Visitor PINX for ANF-PUMI		c.1	[ ]	o: Yes [ ] No [ ]
A6	Behaviour as Originating PINX for ANF-PUMI		c.1	[ ]	o: Yes [ ] No [ ]
A7	Behaviour as Incoming Gateway PINX		c.1	[ ]	o: Yes [ ] No [ ]
A8	Behaviour as Rerouteing PINX		c.2	[ ]	m: Yes [ ]
A9	Support of relevant procedures of ISO/IEC 11572 and ISO/IEC 11582	6.2	m		Yes [ ]

c.1: if A1 or A2 then o.2 else N/A
c.2: if (A1 and (A6 or A7)) or (A2 and A3) then mandatory else N/A

A.3.4 Procedures

Item	Question/feature	References	Status	N/A	Support
B1	Signalling procedures at a Rerouteing PINX	6.5.1	A8:m	[ ]	m: Yes [ ]
B2	Signalling procedures at a PUMI-detect PINX	6.5.2	A3:m	[ ]	m: Yes [ ]
B3	Signalling procedures at a Home PINX	6.5.3.1 6.5.3.2	A4:m	[ ]	m: Yes [ ]
B4	Signalling procedures at a Visitor PINX	6.5.4	A5:m	[ ]	m: Yes [ ]
B5	Additional procedures at a Home PINX for Call Forwarding Unconditional	6.5.3.3	A4:o	[ ]	o: Yes [ ] No [ ]

--`,,`-`-`,,`,,`,`,,`---
© ISO/IEC 2003 – All rights reserved

Copyright International Organization for Standardization
Provided by IHS under license with ISO
No reproduction or networking permitted without license from IHS
Not for Resale

A.3.5 Coding

Item	Question/feature	References	Status	N/A	Support
C1	Receipt of pumiDivert invoke APDU and sending of return result and return error APDUs	6.3	c.1	[ ]	m: Yes [ ]
C2	Sending of pumiInform invoke APDU	6.3	A8:m	[ ]	m: Yes [ ]
C3	Sending of pumiEnquiry invoke APDU and receipt of return result and return error APDUs	6.3	A3:m	[ ]	m: Yes [ ]
C4	Sending of pumiDivert invoke APDU and receipt of return result and return error APDUs	6.3	c.2	[ ]	m: Yes [ ]
C5	Receipt of pumiEnquiry invoke APDU and sending of return result and return error APDUs	6.3	A4:m	[ ]	m: Yes [ ]
C6	Receipt of pumiInform invoke APDU	6.3	A5:m	[ ]	m: Yes [ ]

c.1: if A1 and A8 then mandatory else N/A
c.2: if A1 and A3 then mandatory else N/A

A.3.6 Timers

Item	Question/feature	References	Status	N/A	Support
D1	Support of Timer T1	6.9.1	A3:m	[ ]	m: Yes [ ] Value [. . . .]
D2	Support of Timer T2	6.9.2	c.1	[ ]	m: Yes [ ] Value [. . . .]

c.1: if A1 and A3 then mandatory else N/A

A.3.7 Interactions between ANF-PUMI and SS-CNIP

Item	Question/feature	References	Status	N/A	Support
E1	Support of SS-CNIP	ISO/IEC 13868	o		Yes [ ] No [ ]
E2	Interactions at Rerouteing PINX	6.8.1.1	c.1	[ ]	m: Yes [ ]

c.1: if E1 and A8 then mandatory, else N/A

A.3.8 Interactions between ANF-PUMI and SS-CFU

Item	Question/feature	References	Status	N/A	Support
F1	Support of SS-CFU	ISO/IEC 13873	o		Yes [ ] No [ ]
F2	Interactions at PUMI-detect PINX	6.8.6.1	c.1	[ ]	m: Yes [ ]

c.1: if F1 and A3 then mandatory, else N/A

© ISO/IEC 2003 – All rights reserved
Copyright International Organization for Standardization
Provided by IHS under license with ISO
No reproduction or networking permitted without license from IHS
Not for Resale

A.3.9 Interactions between ANF-PUMI and SS-CO

Item	Question/feature	References	Status	N/A	Support
G1	Support of SS-CO	ISO/IEC 14843	o		Yes [ ] No [ ]
G2	Interactions at Rerouteing PINX	6.8.11.1	c.1	[ ]	m: Yes [ ]

c.1: if G1 and A8 then mandatory, else N/A

A.3.10 Interactions between ANF-PUMI and SS-CI

Item	Question/feature	References	Status	N/A	Support
H1	Support of SS-CI	ISO/IEC 14846	o		Yes [ ] No [ ]
H2	Interactions at Rerouteing PINX	6.8.12.1	c.1	[ ]	m: Yes [ ]

c.1: if H1 and A8 then mandatory, else N/A

A.3.11 Interactions between ANF-PUMI and SS-DNDO

Item	Question/feature	References	Status	N/A	Support
I1	Support of SS-DNDO	ISO/IEC 14844	o		Yes [ ] No [ ]
I2	Interactions at Rerouteing PINX	6.8.14.1	c.1	[ ]	m: Yes [ ]

c.1: if I1 and A8 then mandatory, else N/A

A.3.12 Interactions between ANF-PUMI and SS-AOC

Item	Question/feature	References	Status	N/A	Support
J1	Support of SS-AOC	ISO/IEC 15050	o		Yes [ ] No [ ]
J2	Interactions at Rerouteing PINX	6.8.15.1	c.1	[ ]	m: Yes [ ]
J3	Interactions at PUMI-detect PINX	6.8.15.2	c.2	[ ]	m Yes [ ]
J4	Interactions at Visitor PINX	6.8.15.3	c.3	[ ]	m Yes [ ]

c.1: if J1 and A8 then mandatory, else N/A
c.2: if J1 and A3 then mandatory, else N/A
c.3: if J1 and A5 then mandatory, else N/A

A.3.13 Interactions between ANF-PUMI and ANF-TC

Item	Question/feature	References	Status	N/A	Support
K1	Support of ANF-TC	ISO/IEC 15056	o		Yes [ ] No [ ]
K2	Interactions at Rerouteing PINX	6.8.18.1	c.1	[ ]	o: Yes [ ] No [ ]

c.1: if K1 and A8 then optional, else N/A

© ISO/IEC 2003 – All rights reserved

Copyright International Organization for Standardization
Provided by IHS under license with ISO
No reproduction or networking permitted without license from IHS
Not for Resale

A.3.14 Interactions between ANF-PUMI and ANF-RRC

Item	Question/feature	References	Status	N/A	Support
L1	Support of ANF-RRC	ISO/IEC 13241	o		Yes [ ] No [ ]
L2	Interactions at Rerouteing PINX	6.8.19.1	c.1	[ ]	m: Yes [ ]
L3	Interactions at PUMI-detect PINX	6.8.19.2	c.2	[ ]	o: Yes [ ] No [ ]
L4	Interactions at Home PINX	6.8.19.3	c.3	[ ]	o: Yes [ ] No [ ]

c.1: if L1 and A8 then mandatory, else N/A
c.2: if L1 and A3 then optional, else N/A
c.3: if L1 and A4 then optional, else N/A

A.3.15 Interactions between ANF-PUMI and SS-MWI

Item	Question / feature	References	Status	N/A	Support
M1	Support of SS-MWI	ISO/IEC 15506	o		Yes [ ] No [ ]
M2	Interactions at Rerouteing PINX	6.8.20.1	c.1	[ ]	m: Yes [ ]
M3	Interactions at PUMI-detect PINX	6.8.20.2	c.2	[ ]	o: Yes [ ] No [ ]
M4	Interactions at Home PINX	6.8.20.3	c.3	[ ]	o: Yes [ ] No [ ]
M5	Interactions at Visitor PINX	6.8.20.4	c.4	[ ]	m: Yes [ ]

c.1: if M1 and A8 then mandatory, else N/A
c.2: if M1 and A3 then optional, else N/A
c.3: if M1 and A4 then optional, else N/A
c.4: if M1 and A5 then mandatory, else N/A

A.3.16 Interactions between ANF-PUMI and ANF-WTMI

Item	Question / feature	References	Status	N/A	Support
N1	Support of ANF-WTMI	ISO/IEC 15431	o		Yes [ ] No [ ]
N2	Interactions at WTMI Rerouteing PINX	6.8.22.1	N1:m	[ ]	m: Yes [ ]
N3	Interactions at Visitor PINX	6.8.22.2	c.1	[ ]	m: Yes [ ]

c.1: if N1 and A5 then mandatory, else N/A

A.3.17 Interactions between ANF-PUMI and ANF-PUMO

Item	Question / feature	References	Status	N/A	Support
O1	Support of ANF-PUMO	7	o		Yes [ ] No [ ]
O2	Interactions at PUMI-detect PINX	6.8.27.1	c.1	[ ]	m: Yes [ ]

c.1: if O1 and A3 then mandatory, else N/A

© ISO/IEC 2003 – All rights reserved
Copyright International Organization for Standardization
Provided by IHS under license with ISO
No reproduction or networking permitted without license from IHS
Not for Resale

A.3.18 Interactions between ANF-PUMI and ANF-CMN

Item	Question/feature	References	Status	N/A	Support
P1	Support of ANF-CMN	ISO/IEC 15772	o		Yes [ ] No [ ]
P2	Interactions at Rerouteing PINX	6.8.28.1	c.1	[ ]	m: Yes [ ]

c.1: if P1 and A8 then mandatory, else N/A

A.3.19 Interactions between ANF-PUMI and SS-CPI(P)

Item	Question/feature	References	Status	N/A	Support
Q1	Support of SS-CPI(P)	ISO/IEC 15992	o		Yes [ ] No [ ]
Q2	Interactions at Rerouteing PINX	6.8.29.1	c.1	[ ]	m: Yes [ ]
Q3	Interactions at PUMI-detect PINX	6.8.29.2	c.2	[ ]	m: Yes [ ]

c.1: if Q1 and A8 then mandatory, else N/A
c.2: if Q1 and A3 then mandatory, else N/A

© ISO/IEC 2003 – All rights reserved

Copyright International Organization for Standardization
Provided by IHS under license with ISO
No reproduction or networking permitted without license from IHS
Not for Resale

A.4 PICS proforma for ANF-PUMO

A.4.1 Implementation Identification

Supplier	
Contact point for queries about the PICS	
Implementation Name(s) and Version(s)	
Other information necessary for full identification, e.g., name(s) and version(s) for machines and/or operating systems; system name(s)	

Only the first three items are required for all implementations; other information may be completed as appropriate in meeting the requirement for full identification.

The terms Name and Version should be interpreted appropriately to correspond with a supplier's terminology (e.g., Type, Series, Model).

A.4.2 Protocol Summary

Protocol Version	1.0
Addenda Implemented (if applicable)	
Amendments Implemented	
Have any exception items been required (see A.2.3) ?	No [ ] Yes [ ] (The answer YES means that the implementation does not conform to this International Standard)

Date of Statement	

© ISO/IEC 2003 – All rights reserved
Copyright International Organization for Standardization
Provided by IHS under license with ISO
No reproduction or networking permitted without license from IHS
Not for Resale

A.4.3 General

Item	Question/feature	References	Status	N/A	Support
A1	Behaviour as Originating PINX for ANF-PUMO		o.1		Yes [ ] No [ ]
A2	Behaviour as Home PINX for ANF-PUMO		o.1		Yes [ ] No [ ]
A3	Support of relevant procedures of ISO/IEC 11572 and ISO/IEC 11582	7.2	m		Yes [ ]

A.4.4 Procedures

Item	Question / feature	References	Status	N/A	Support
B1	PUMO procedures at Originating PINX	7.5.1	A1:m	[ ]	m: Yes [ ]
B2	PUMO procedures at Home PINX	7.5.2	A2:m	[ ]	m: Yes [ ]

A.4.5 Coding

Item	Question / feature	References	Status	N/A	Support
C1	Sending of pumoCall invoke APDU	7.3.1	A1:m	[ ]	m: Yes [ ]
C2	Receipt of pumoCall invoke APDU	7.3.1	A2:m	[ ]	m: Yes [ ]

A.4.6 Timers

Item	Question / feature	References	Status	N/A	Support
D1	Support of timer T3	7.9.2	A2:m	[ ]	m: Yes [ ] Value: .....

A.4.7 Interactions between ANF-PUMO and SS-CNIP

Item	Question/feature	References	Status	N/A	Support
E1	Support of SS-CNIP	ISO/IEC 13868	o		Yes [ ] No [ ]
E2	Interactions at Home PINX	7.8.1.1	c.1	[ ]	o: Yes [ ] No [ ]

c.1: if E1 and A2 then optional, else N/A

A.4.8 Interactions between ANF-PUMO and Call Diversion

Item	Question / feature	References	Status	N/A	Support
F1	Support of SS-CFU/CFB/CFNR/CD	ISO/IEC 13873	o		Yes [ ] No [ ]
F2	Home PINX acts as Rerouting PINX	7.8.6.1	c.1	[ ]	o: Yes [ ] No [ ]

c.1: if F1 and A2 then optional, else N/A

-`,,`-`-`,,`,,`,`,,`---
© ISO/IEC 2003 – All rights reserved

Copyright International Organization for Standardization
Provided by IHS under license with ISO
No reproduction or networking permitted without license from IHS
Not for Resale

A.4.9 Interactions between ANF-PUMO and ANF-PR

Item	Question / feature	References	Status	N/A	Support
G1	Support of ANF-PR	ISO/IEC 13874	o		Yes [ ] No [ ]
G2	Home PINX acts as Cooperating PINX	7.8.7.1	c.1	[ ]	o: Yes [ ] No [ ]

c.1: if G1 and A2 then optional, else N/A

A.4.10 Interactions between ANF-PUMO and ANF-CINT

Item	Question / feature	References	Status	N/A	Support
H1	Support of ANF-CINT	ISO/IEC 15054	o		Yes [ ] No [ ]
H2	Home PINX acts as Intercepting PINX	7.8.14.1	c.1	[ ]	o: Yes [ ] No [ ]

c.1: if H1 and A2 then optional, else N/A

A.4.11 Interactions between ANF-PUMO and ANF-TC

Item	Question/feature	References	Status	N/A	Support
I1	Support of ANF-TC	ISO/IEC 15056	o		Yes [ ] No [ ]
I2	Interactions at Home PINX	7.8.15.1	c.1	[ ]	o:Yes [ ] No [ ]

c.1: if I1 and A2 then optional, else N/A

A.4.12 Interactions between ANF-PUMO and ANF-RRC

Item	Question/feature	References	Status	N/A	Support
J1	Support of ANF-RRC	ISO/IEC 13241	o		Yes [ ] No [ ]
J2	Interactions at Home PINX	7.8.16.1	c.1	[ ]	o:Yes [ ] No [ ]

c.1: if J1 and A2 then optional, else N/A

© ISO/IEC 2003 – All rights reserved
Copyright International Organization for Standardization
Provided by IHS under license with ISO
No reproduction or networking permitted without license from IHS
Not for Resale

Annex B
(informative)

Imported ASN.1 definitions

The content of this annex has been deleted to remove duplicate ASN.1 definitions defined elsewhere.

© ISO/IEC 2003 – All rights reserved

Copyright International Organization for Standardization
Provided by IHS under license with ISO
No reproduction or networking permitted without license from IHS
Not for Resale

Annex C
(informative)

Examples of Message Sequences

This annex describes some typical message flows for ANF-PUMI and ANF-PUMO. The following conventions are used in the figures of this annex:

1. The following notation is used:


Basic call message containing ANF-PUMI / ANF-PUMO information

Basic call message without ANF-PUMI / ANF-PUMO information

Call indepenent signalling connection message containing ANF-PUMI information

Call indepenent signalling connection message without ANF-PUMI information

xxx.inv	Invoke APDU for operation xxx
xxx.res	Return result APDU for operation xxx
xxx.err	Return error APDU for operation xxx

2. The figures show messages exchanged via Protocol Control between PINXs involved in ANF-PUMI / ANF-PUMO. Only messages relevant to ANF-PUMI / ANF-PUMO are shown.

3. Only the relevant information content (e.g. remote operation APDUs, notifications, information elements) is listed below each message name. The Facility information elements containing remote operation APDUs are not explicitly shown. Information with no impact on ANF-PUMI / ANF-PUMO is not shown.

© ISO/IEC 2003 – All rights reserved
Copyright International Organization for Standardization
Provided by IHS under license with ISO
No reproduction or networking permitted without license from IHS
Not for Resale

C.1 Example message sequences for normal operation of ANF-PUMI

Figure C.1 shows an example of normal operation of ANF-PUMI.

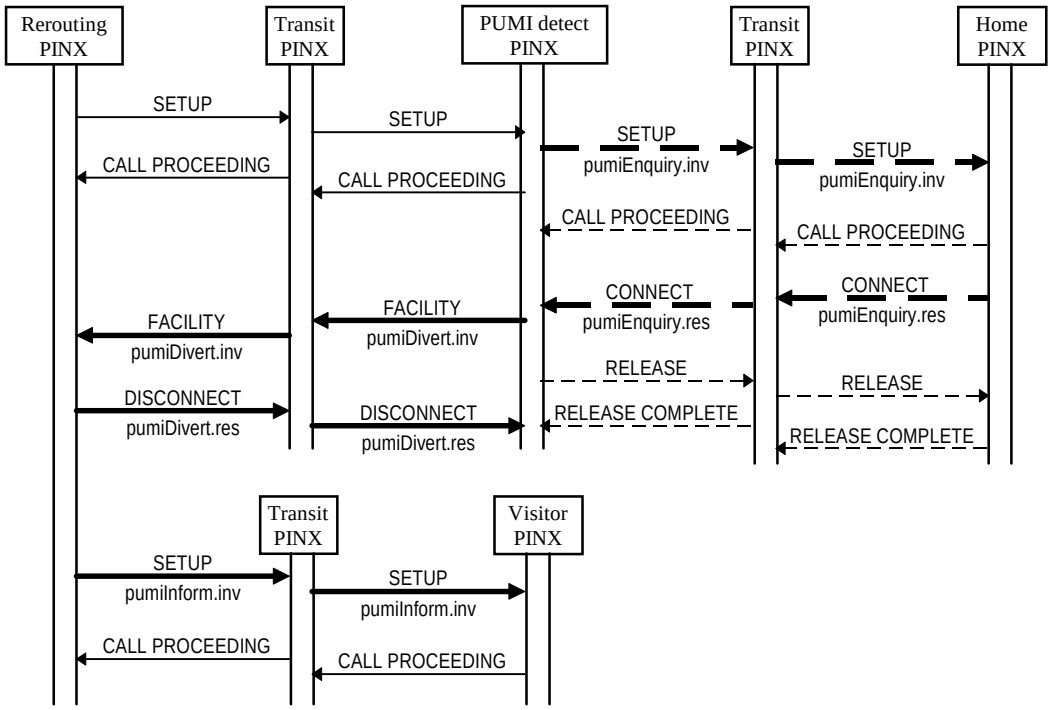

Figure C.1 - Example of normal operation of ANF-PUMI

Figure C.2 shows an example of ANF-PUMI when the Rerouteing fails and the PUMI-detect PINX performs forward switching to the Visitor PINX.

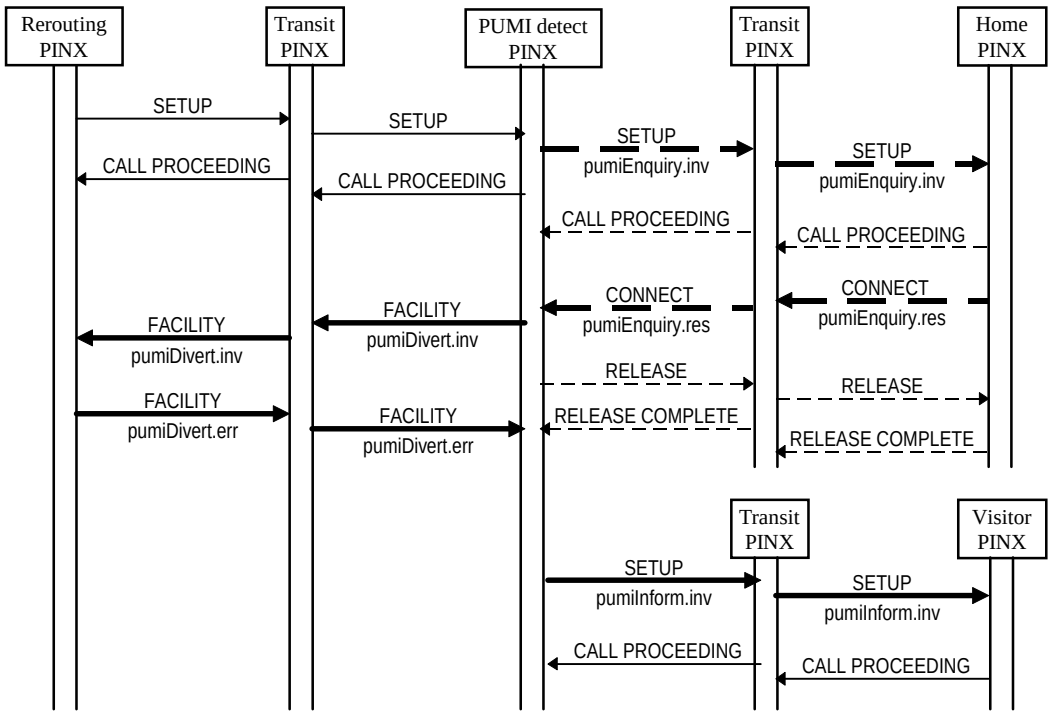

Figure C.2 - Example of forward switching by the PUMI-detect PINX

© ISO/IEC 2003 – All rights reserved

Copyright International Organization for Standardization
Provided by IHS under license with ISO
No reproduction or networking permitted without license from IHS
Not for Resale

C.2 Examples of unsuccessful operation of ANF-PUMI

C.2.1 PUM user unknown in Home PINX

Figure C.3 shows an example of unsuccessful operation of ANF-PUMI due to PUM user unknown.

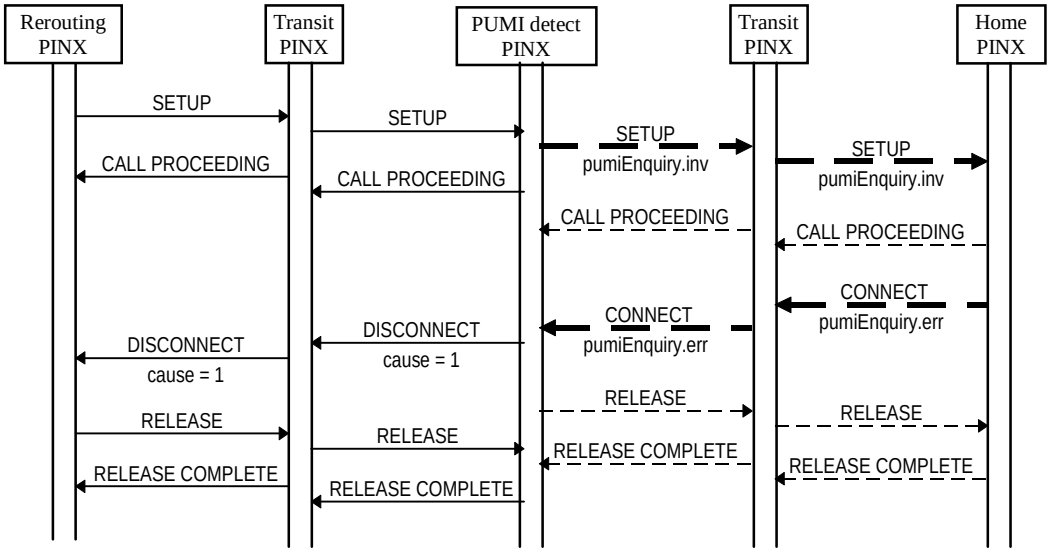

Figure C.3 - Example of ANF-PUMI failure due to PUM user unknown

C.2.2 PUM user has de-registered

Figure C.4 shows an example of unsuccessful operation of ANF-PUMI due to the PUM user having de-registered.

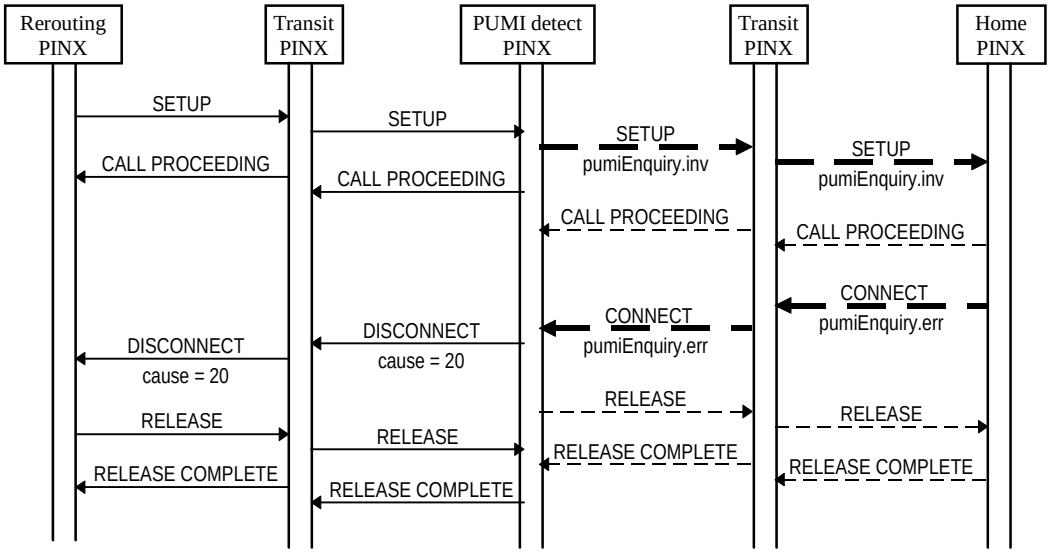

Figure C.4 - Example of ANF-PUMI failure due to PUM user having de-registered

© ISO/IEC 2003 – All rights reserved
Copyright International Organization for Standardization
Provided by IHS under license with ISO
No reproduction or networking permitted without license from IHS
Not for Resale

C.2.3 Collision with location update detected by Visitor PINX

Figure C.5 shows an example of unsuccessful operation of ANF-PUMI due to collision with location update.

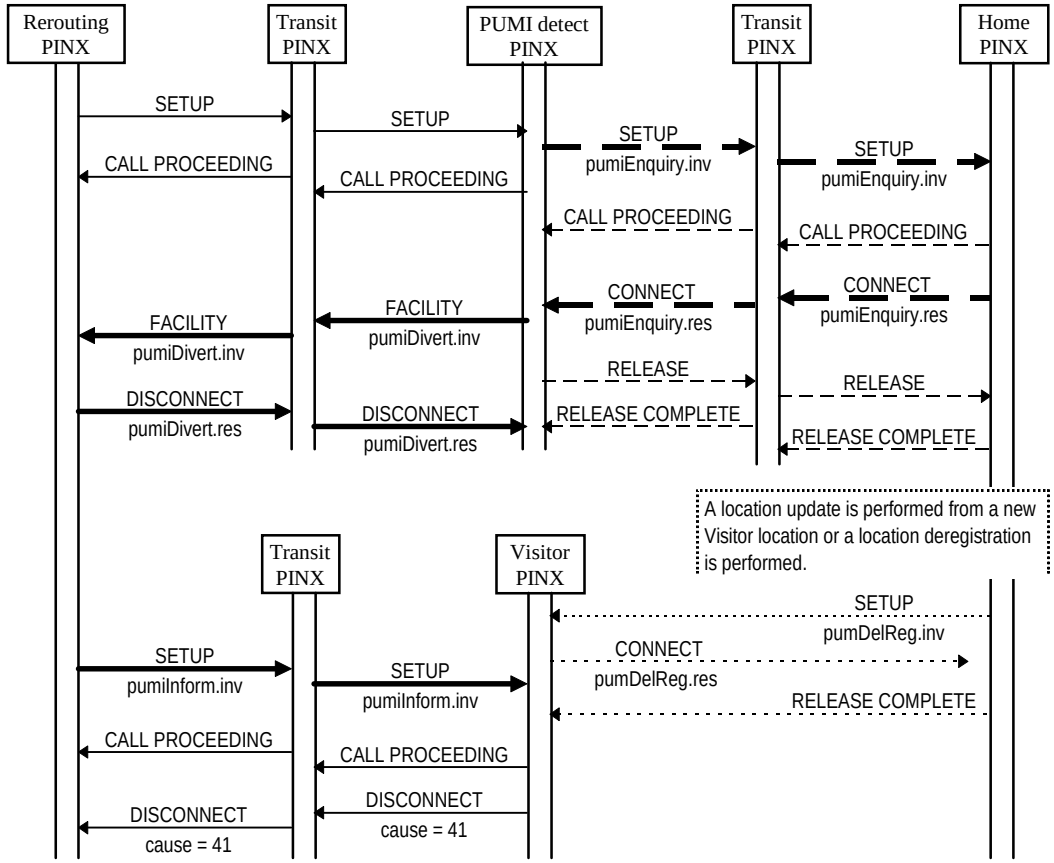

Figure C.5 - Example of ANF-PUMI failure due to collision with location update

© ISO/IEC 2003 – All rights reserved

Copyright International Organization for Standardization
Provided by IHS under license with ISO
No reproduction or networking permitted without license from IHS
Not for Resale

C.3 Successful invocation of ANF-PUMO

C.3.1 With overlap operation

Figure C.6 shows an example of the invocation of ANF-PUMO where the destination number is sent in pieces.

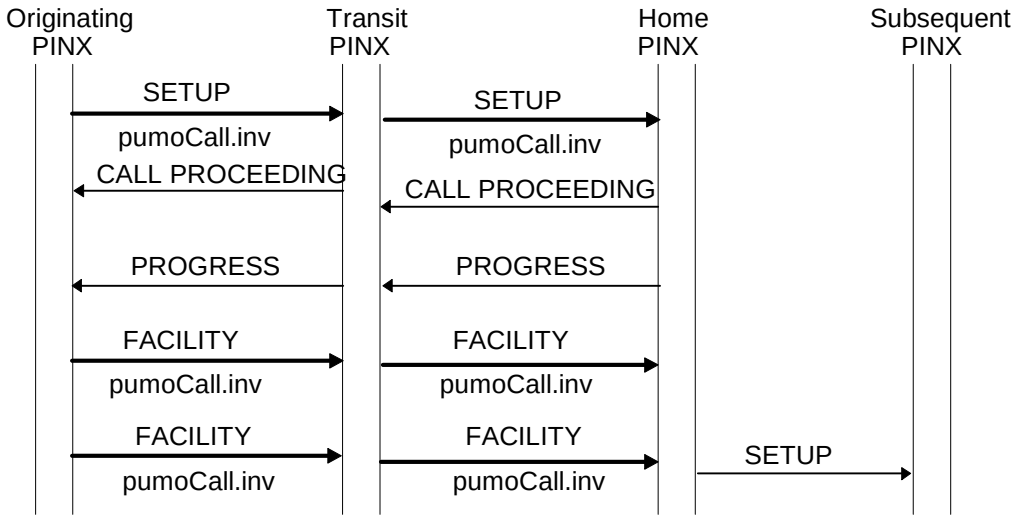

Figure C.6 - Successful invocation of ANF-PUMO with overlap operation

C.3.2 With en-bloc operation

Figure C.7 shows an example of the invocation of ANF-PUMO where the whole destination number is sent in the first message.

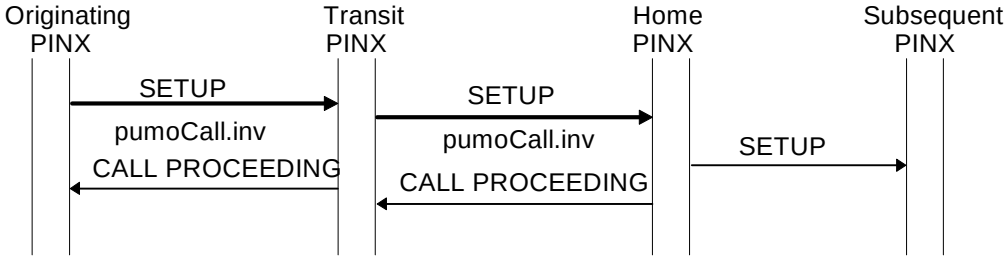

Figure C.7 - Successful invocation of ANF-PUMO with en-bloc operation

© ISO/IEC 2003 – All rights reserved
Copyright International Organization for Standardization
Provided by IHS under license with ISO
No reproduction or networking permitted without license from IHS
Not for Resale

Annex D
(informative)

Specification and Description Language (SDL) representation of procedures

The diagrams in this annex use the Specification and Description Language defined in ITU-T Recommendation Z.100.

Each diagram represents the behaviour of an ANF-PUMI / ANF-PUMO Service Control entity at a particular type of PINX. In accordance with the protocol model described in ISO/IEC 11582, the Supplementary Service Control entity uses, via the Coordination function, the services of Generic Functional Procedures Control and Basic Call Control.

Where an output symbol represents a primitive to the Coordination function, and that primitive results in a message being sent, the output symbol bears the name of the message and any remote operations APDU(s) contained in that message. In the case of a message specified in ISO/IEC 11572, basic call actions associated with the sending of that message are deemed to occur.

Where an input symbol represents a primitive from the Coordination function, and that primitive is the result of a message being received, the input signal bears the name of the message and any remote operations APDU(s) contained in that message. In the case of a message specified in ISO/IEC 11572, basic call actions associated with the receipt of that message are deemed to have occurred.

The following abbreviations are used:

inv Invoke APDU

res Return result APDU

err Return error APDU

rej Reject APDU

--`,,`-`-`,,`,,`,`,,`---

© ISO/IEC 2003 – All rights reserved

Copyright International Organization for Standardization
Provided by IHS under license with ISO
No reproduction or networking permitted without license from IHS

Not for Resale

D.1 SDL representation of ANF-PUMI at the Rerouteing PINX

Figure D.1 shows the behaviour of an ANF-PUMI Supplementary Service Control entity within the Rerouteing PINX.

Input signals from the right and output signals to the right represent primitives to and from the Co-ordination Function in respect of messages sent and received.

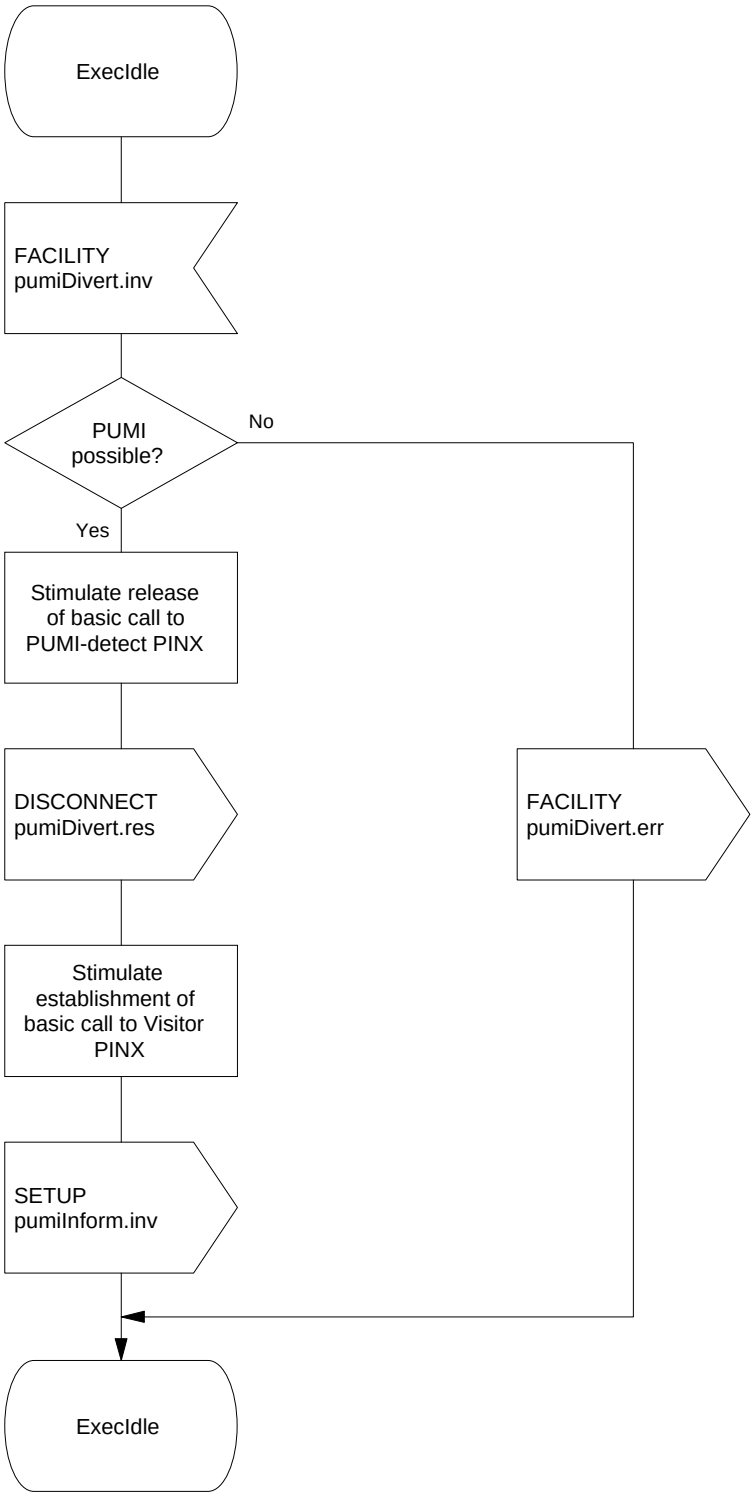

Figure D.1 - SDL representation of ANF-PUMI at the Rerouteing PINX

© ISO/IEC 2003 – All rights reserved
Copyright International Organization for Standardization
Provided by IHS under license with ISO
No reproduction or networking permitted without license from IHS
Not for Resale

D.2 SDL representation of ANF-PUMI at the PUMI-detect PINX

Figure D.2 shows the behaviour of an ANF-PUMI entity within the PUMI-detect PINX.

Input signals from the right and output signals to the right represent primitives to and from the Co-ordination Function in respect of messages sent and received. Also protocol timer expiry is indicated by an input signal from the right.

Input signals from the left represent internal stimuli.

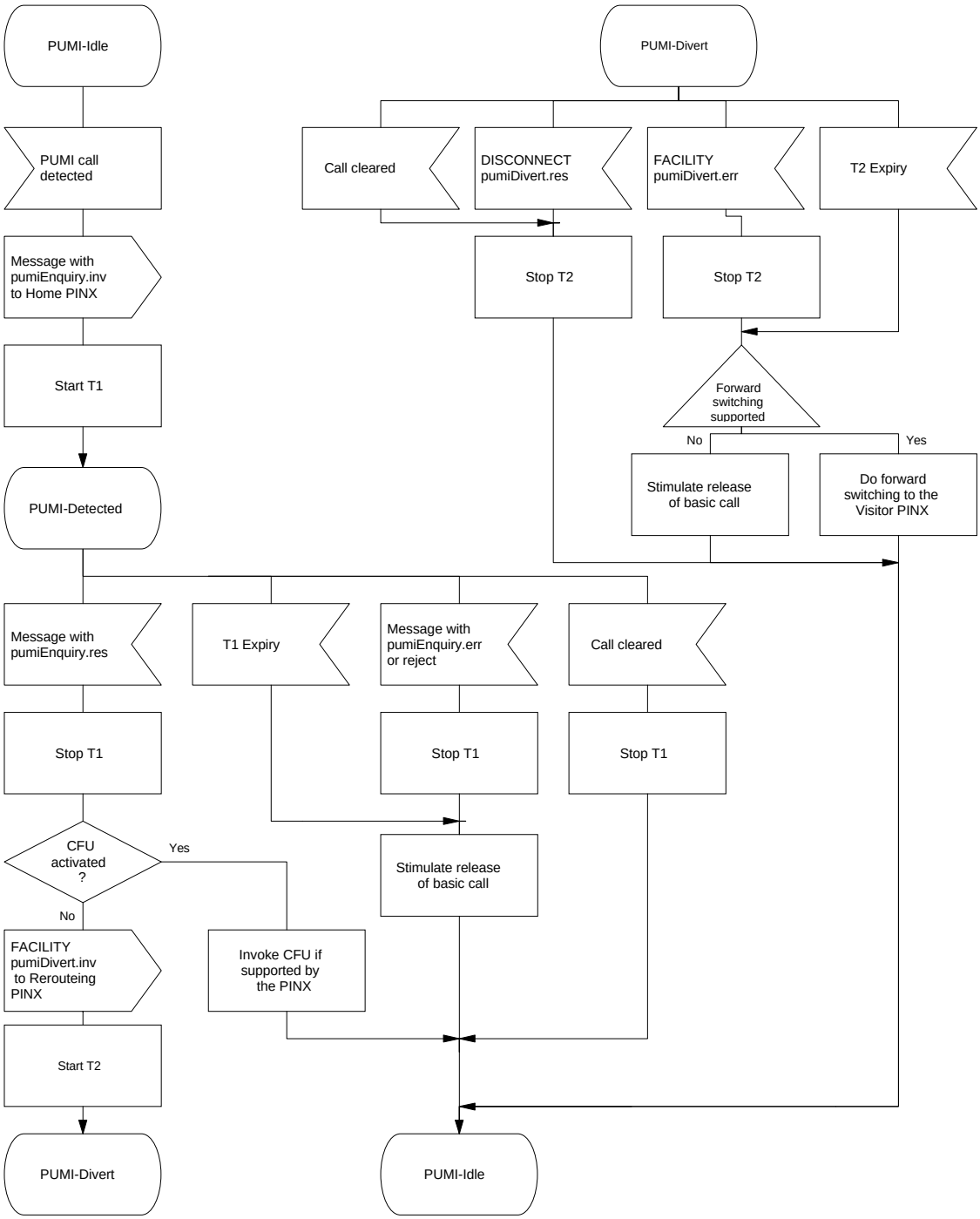

Figure D.2 - SDL representation of ANF-PUMI at the PUMI-detect PINX

© ISO/IEC 2003 – All rights reserved

Copyright International Organization for Standardization
Provided by IHS under license with ISO
No reproduction or networking permitted without license from IHS
Not for Resale

D.3 SDL representation of ANF-PUMI at the Home PINX

Figure D.3 shows the behaviour of an ANF-PUMI entity within the Home PINX.

Input signals from the right and output signals to the right represent primitives to and from the Co-ordination Function in respect of messages sent and received.

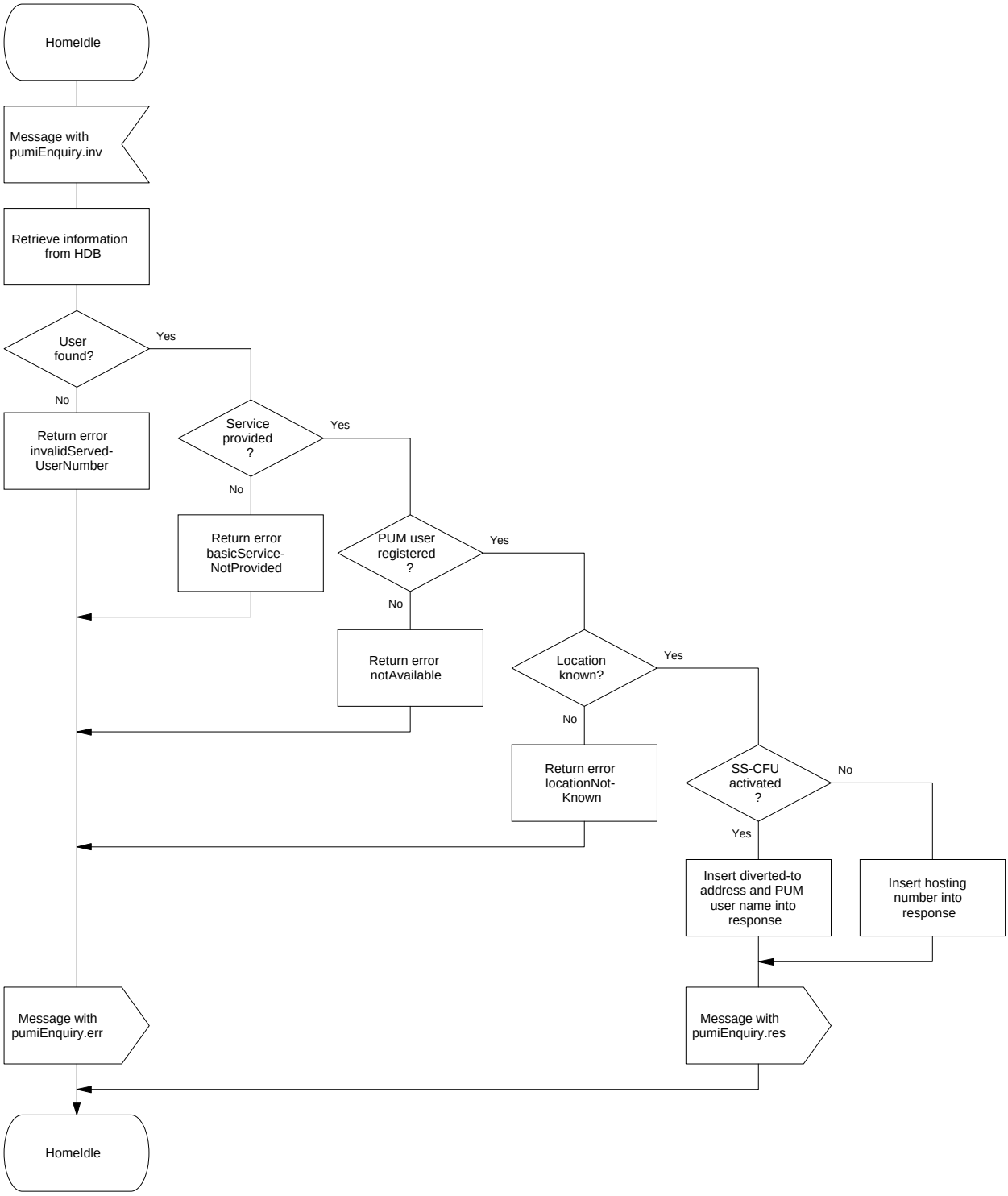

Figure D.3 - SDL representation of ANF-PUMI at the Home PINX

© ISO/IEC 2003 – All rights reserved
Copyright International Organization for Standardization
Provided by IHS under license with ISO
No reproduction or networking permitted without license from IHS
Not for Resale

D.4 SDL representation of ANF-PUMI at the Visitor PINX

Figure D.4 shows the behaviour of an ANF-PUMI entity within the Visitor PINX.

Input signals from the right and output signals to the right represent primitives to and from the Co-ordination Function in respect of messages sent and received.

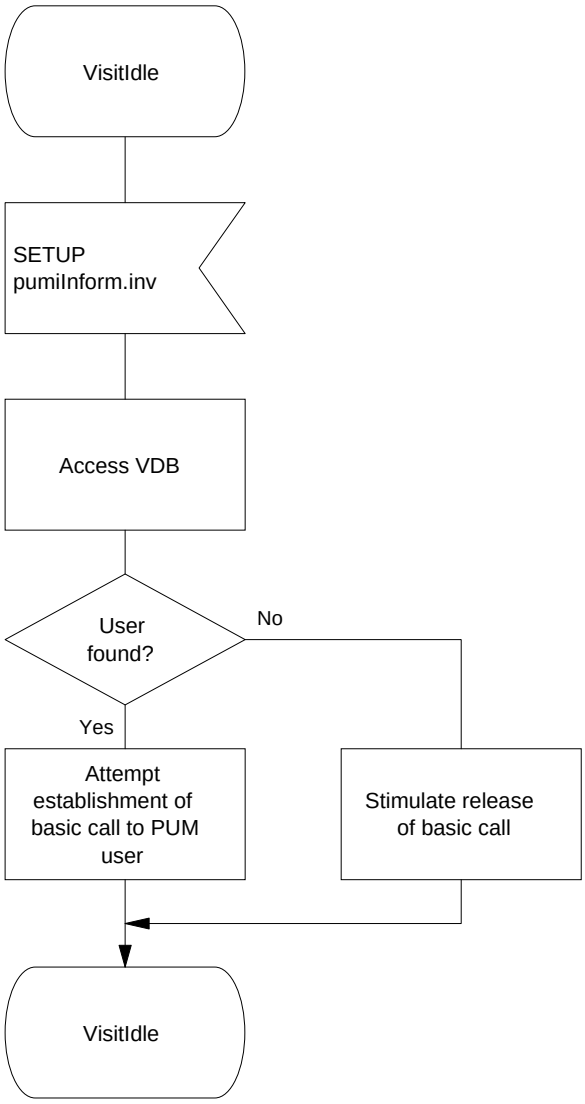

Figure D.4 - SDL representation of ANF-PUMI at the Visitor PINX

© ISO/IEC 2003 – All rights reserved

Copyright International Organization for Standardization
Provided by IHS under license with ISO
No reproduction or networking permitted without license from IHS
Not for Resale

D.5 Behaviour of the Originating PINX for ANF-PUMO

Figure D.5 shows the behaviour of the Originating PINX.

Input signals from the left represent internal primitives. Output signals to the right represent messages to the peer SS-Control entity (i.e. in the Home PINX).

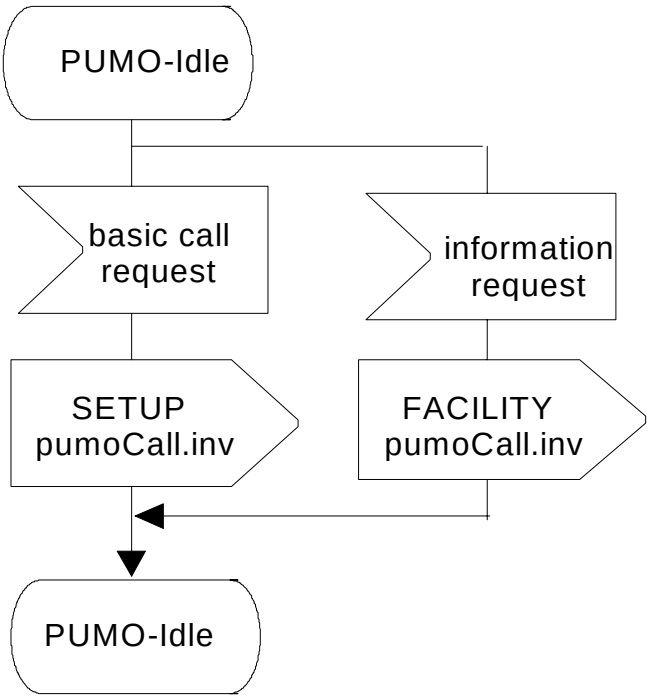

Figure D.5 - Originating PINX behaviour

© ISO/IEC 2003 – All rights reserved
Copyright International Organization for Standardization
Provided by IHS under license with ISO
No reproduction or networking permitted without license from IHS
Not for Resale

D.6 Behaviour of the Home PINX for ANF-PUMO

Figures D.6 and D.7 show the behaviour of the Home PINX.

Input signals from the left represent messages from the peer SS-Control entity (i.e. in the Originating PINX). Output signals to the right and input signals from the right represent internal primitives.

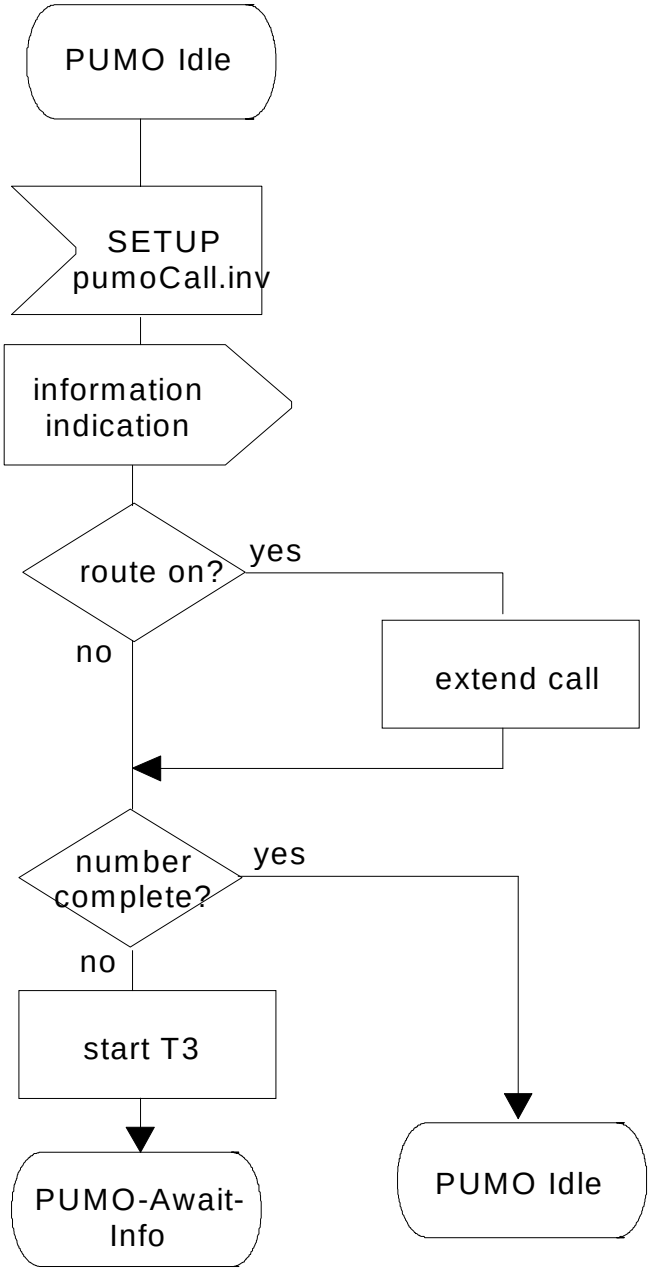

Figure D.6 - Home PINX behaviour (part 1)

--`,,`-`-`,,`,,`,`,,`---
© ISO/IEC 2003 – All rights reserved

Copyright International Organization for Standardization
Provided by IHS under license with ISO
No reproduction or networking permitted without license from IHS
Not for Resale

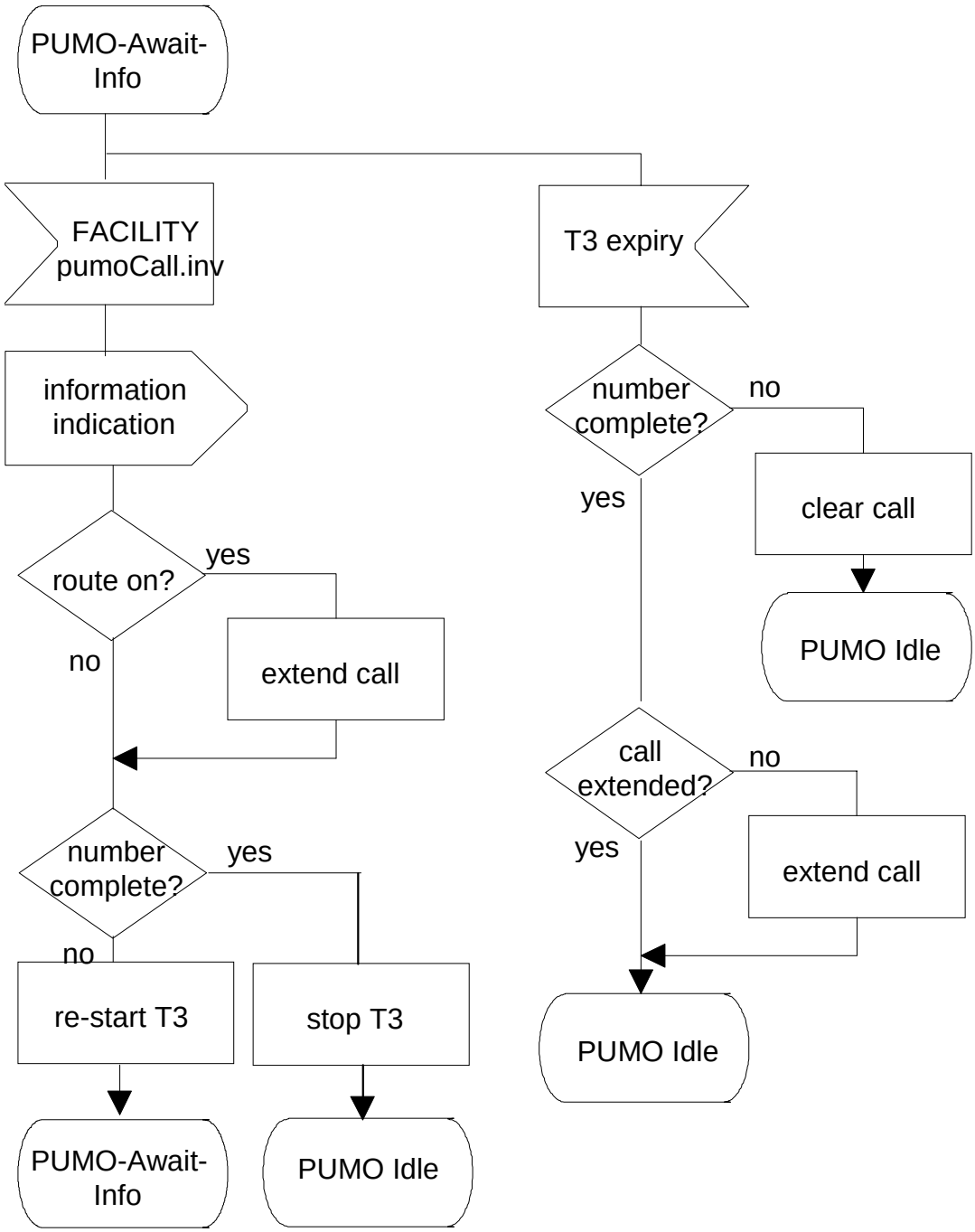

Figure D.7 - Home PINX behaviour (part 2)

--`,,`-`-`,,`,,`,`,,`---

© ISO/IEC 2003 – All rights reserved
Copyright International Organization for Standardization
Provided by IHS under license with ISO
No reproduction or networking permitted without license from IHS
Not for Resale

Annex E
(normative)

Additional feature identifier in module Common-Information-Operations

In ASN.1 module Common-Information-Operations {iso (1) standard (0) pss1-common-information (15772) operations (0)}, specified in 6.3.1 of ISO/IEC 15772, bit number 16 of type **FeatureIdList** shall be interpreted in the following way:

anfPUMIreRoutingSupported	(16)	*-- Rerouting for* *-- Incoming PUM calls* *-- supported*

© ISO/IEC 2003 – All rights reserved

Copyright International Organization for Standardization
Provided by IHS under license with ISO
No reproduction or networking permitted without license from IHS
Not for Resale

Annex F
(normative)

ASN.1 definitions according to ITU-T Recs. X.208 / X.209

This annex lists all ASN.1 modules as they were defined in the first edition of ISO/IEC 17878, i.e. based on ITU-T Recommendations X.208 / X.209. Starting with this edition the ASN.1 modules within ISO/IEC 17878 comply with ITU-T Recommendations X.680 / X.690. Please note that regardless of which version of these modules is used as a base of a QSIG implementation, the line encoding remains unchanged. Changes in future editions to modules based on X.680 / X.690 ASN.1 are not reflected in the modules in this annex.

Table F.1 - Private-User-Mobility-Call-Handling-Operations – based on ITU-T Recs. X.208 / X.209

```
Private-User-Mobility-Call-Handling-Operations
  { iso (1) standard (0)  pss1-pum-call-handling (17878) pum-call-handling-operations (0)}


DEFINITIONS EXPLICIT TAGS ::=


BEGIN
IMPORTS         OPERATION, ERROR FROM Remote-Operation-Notation
                        { joint-iso-ccitt (2) remote-operations (4) notation (0) }
                Extension FROM Manufacturer-specific-service-extension-definition
                        { iso (1) standard (0)
                        pss1-generic-procedures (11582) msi-definition (0) }
                PSS1InformationElement FROM Generic-parameters-definition
                        { iso (1) standard (0)
                        pss1-generic-procedures (11582) pss1-generic-parameters (6) }
                Name FROM Name-Operations
                        { iso (1) standard (0)
                        pss1-name (13868) name-operations (0) }
                basicServiceNotProvided, invalidServedUserNumber, notAvailable FROM
                        General-Error-List
                        { ccitt (0) recommendation (0) q (17) 950 general-error-list (1) }
                Address, PartyNumber, PartySubaddress, PresentedNumberScreened FROM
                        Addressing-Data-Elements
                        { iso (1) standard (0) pss1-generic-procedures (11582)
                        addressing-data-elements (9) };
-- Operations for ANF-PUMI: --
PumiEnquiry ::=         OPERATION
                -- Sent from the PUMI-detect PINX to the Home PINX.
                        ARGUMENT        EnquiryArg
                        RESULT          EnquiryRes
                        ERRORS          { invalidServedUserNumber, locationNotKnown,
                                          notAvailable, basicServiceNotProvided, unspecified }
PumiDivert ::=          OPERATION
                -- Sent from the PUMI-detect PINX to the Rerouteing PINX.
                        ARGUMENT        DivertArg
                        RESULT          DummyRes
                        ERRORS          { notAvailable, unspecified }
```


© ISO/IEC 2003 – All rights reserved
Copyright International Organization for Standardization
Provided by IHS under license with ISO
No reproduction or networking permitted without license from IHS
Not for Resale

Table F.1 - Private-User-Mobility-Call-Handling-Operations – based on ITU-T Recs. X.208 / X.209 (continued)

```
PumiInform ::=          OPERATION
                    -- Sent from the Rerouteing PINX to the Visitor PINX.
                        ARGUMENT    InformArg

EnquiryArg ::=          SEQUENCE    { pisnNumber            PartyNumber,
                                      -- The PISN number of the PUM user
                                      qSIGInfoElement       PSS1InformationElement,
                    -- The basic call information elements Bearer capability, High layer compatibility,
                    -- Low layer compatibility can be embedded in the qSIGInfoElement
                    -- in accordance with clause 6.5.2.1.
                                      argExtension          PumiExtension OPTIONAL }

DivertArg ::=       SEQUENCE        { hostingAddr           PartyNumber,
                                      -- The PISN number of the hosting user,
                                      -- always a Complete Number.
                                      callingNumber         PresentedNumberScreened,
                                      pumIdentity           PumIdentity,
                                      -- The PISN number (always a Complete Number)
                                      -- and/or an alternative identifier of the PUM user.
                                      qSIGInfoElement       PSS1InformationElement,
                    -- The basic call information elements Bearer capability, High layer compatibility,
                    -- Low  layer compatibility, and Progress indicator
                    -- can be embedded in the qSIGInfoElement in accordance with clause 6.5.2.1.
                                      callingUserSub        [ 1 ] PartySubaddress OPTIONAL,
                                      callingUserName       [ 2 ] Name OPTIONAL,
                                      pumUserSub            [ 3 ] PartySubaddress OPTIONAL,
                                      argExtension          PumiExtension OPTIONAL }

InformArg ::=       SEQUENCE        { pumIdentity   PumIdentity,
                                      -- The PISN number (always a Complete Number)
                                      -- and/or an alternative identifier of the PUM user.
                                      argExtension          PumiExtension OPTIONAL }

EnquiryRes ::=      CHOICE          { currLocation          [ 1 ] IMPLICIT CurrLocation,
                                      cfuActivated          [ 2 ] IMPLICIT CfuActivated }

CurrLocation  ::=   SEQUENCE        { hostingAddr           PartyNumber,
                                      -- The PISN number of the hosting user,
                                      -- always a Complete Number.
                                      PumIdentity           PumIdentity,
                                      -- The PISN number (always a Complete Number)
                                      -- and/or an alternative identifier of the PUM user.
                                      argExtension          PumiExtension OPTIONAL }

CfuActivated  ::=   SEQUENCE        { divToAddress          Address,
                                      divOptions            SubscriptionOption,
                                      pumName               [ 1 ] Name OPTIONAL,
                                      argExtension          PumiExtension OPTIONAL }

SubscriptionOption ::=ENUMERATED    { noNotification (0),
                                      notificationWithoutDivertedToNr (1),
                                      notificationWithDivertedToNr (2) }

DummyRes ::=        CHOICE          { null          NULL,
                                      extension     [ 1 ] IMPLICIT Extension,
                                      sequOfExtn    [ 2 ] IMPLICIT SEQUENCE OF Extension }

PumiExtension ::=   CHOICE          { extension     [ 4 ] IMPLICIT Extension,
                                      sequOfExtn    [ 5 ] IMPLICIT SEQUENCE OF Extension }
```

© ISO/IEC 2003 – All rights reserved

Copyright International Organization for Standardization
Provided by IHS under license with ISO
No reproduction or networking permitted without license from IHS
Not for Resale

Table F.1 - Private-User-Mobility-Call-Handling-Operations – based on ITU-T Recs. X.208 / X.209 (concluded)

```
PumIdentity ::=     CHOICE                  { pisnNumber    PartyNumber,
                                              alternativeId [ 10 ] IMPLICIT AlternativeId,
                                              both          [ 11 ] IMPLICIT SEQUENCE
                                                             { pisnNumber   PartyNumber,
                                                               alternativeId AlternativeId } }
AlternativeId ::=   OCTET STRING(SIZE(1..20))
-- Operation for ANF-PUMO --
PumoCall ::=        OPERATION
                    ARGUMENT                PumoArg
PumoArg ::=         SEQUENCE                { destinationNumber  [0]  PartyNumber  OPTIONAL,
                                              pumIdentity       [1]  PumIdentity   OPTIONAL,
                                              -- The PISN number (always a Complete Number)
                                              -- and/or an alternative identifier of the PUM user.
                                              sendingComplete   [2]  IMPLICIT NULL  OPTIONAL,
                                              extension         CHOICE
                                              {single           [3] IMPLICIT Extension,
                                              multiple          [4] IMPLICIT SEQUENCE OF Extension }
                                                                        OPTIONAL    }

pumiEnquiry         PumiEnquiry     ::=     localValue 93
pumiDivert          PumiDivert      ::=     localValue 94
pumiInform          PumiInform      ::=     localValue 95
pumoCall            PumoCall        ::=     localValue 96
locationNotKnown    ERROR           ::=     localValue 1015
unspecified         Unspecified     ::=     localValue 1008
Unspecified                         ::=     ERROR  PARAMETER Extension

END                 -- of Private-User-Mobility-Call-Handling-Operations
```


© ISO/IEC 2003 – All rights reserved
Copyright International Organization for Standardization
Provided by IHS under license with ISO
No reproduction or networking permitted without license from IHS
Not for Resale

Copyright International Organization for Standardization
Provided by IHS under license with ISO
No reproduction or networking permitted without license from IHS
Not for Resale

ICS 33.040.35

Price based on 50 pages

--`,,,`-`-`,,`,,`,`,,`---

© ISO/IEC 2003 – All rights reserved

Copyright International Organization for Standardization
Provided by IHS under license with ISO
No reproduction or networking permitted without license from IHS

Not for Resale