INTERNATIONAL STANDARD

ISO/IEC 17877

First edition
2000-04-15

Information technology — Telecommunications and information exchange between systems — Private Integrated Services Network — Specification, functional model and information flows — Private User Mobility (PUM) — Call handling additional network features

Technologies de l'information — Télécommunications et échange d'information entre systèmes — Réseau privé à intégration de services — Spécifications, modèle fonctionnel et flux d'informations — Mobilité de l'usager privé (PUM) — Caractéristiques additionnelles de réseau de traitement d'appel

Reference number
ISO/IEC 17877:2000(E)

© ISO/IEC 2000

Copyright International Organization for Standardization
Provided by IHS under license with ISO
No reproduction or networking permitted without license from IHS

Not for Resale

PDF disclaimer

This PDF file may contain embedded typefaces. In accordance with Adobe's licensing policy, this file may be printed or viewed but shall not be edited unless the typefaces which are embedded are licensed to and installed on the computer performing the editing. In downloading this file, parties accept therein the responsibility of not infringing Adobe's licensing policy. The ISO Central Secretariat accepts no liability in this area.

Adobe is a trademark of Adobe Systems Incorporated.

Details of the software products used to create this PDF file can be found in the General Info relative to the file; the PDF-creation parameters were optimized for printing. Every care has been taken to ensure that the file is suitable for use by ISO member bodies. In the unlikely event that a problem relating to it is found, please inform the Central Secretariat at the address given below.

© ISO/IEC 2000

All rights reserved. Unless otherwise specified, no part of this publication may be reproduced or utilized in any form or by any means, electronic or mechanical, including photocopying and microfilm, without permission in writing from either ISO at the address below or ISO's member body in the country of the requester.

ISO copyright office
Case postale 56 • CH-1211 Geneva 20
Tel. + 41 22 749 01 11
Fax + 41 22 734 10 79
E-mail copyright@iso.ch
Web www.iso.ch

Printed in Switzerland

--`,,```,,,,````-`-`,,`,,`,`,,`---

Copyright International Organization for Standardization
Provided by IHS under license with ISO
No reproduction or networking permitted without license from IHS

Not for Resale

© ISO/IEC 2000 – All rights reserved

Contents

Foreword		**vi**
Introduction		**vii**
1	Scope	**1**
2	Conformance	**1**
3	Normative references	**1**
4	Definitions	**2**
4.1	External definitions	**2**
4.2	Additional network feature (ANF)	**3**
4.3	Alternative identifier	**3**
4.4	Destination number	**3**
4.5	Home Data Base (HDB)	**3**
4.6	Home PINX	**3**
4.7	Hosting address	**3**
4.8	Incoming PUM call	**3**
4.9	Originating number	**3**
4.10	Outgoing PUM call	**3**
4.11	Private User Mobility (PUM)	**3**
4.12	PUM registration	**3**
4.13	PUM user	**3**
4.14	PUM user identity	**3**
4.15	Visitor Data Base (VDB)	**3**
4.16	Visitor PINX	**3**
5	List of acronyms	**3**
6	ANF-PUMI stage 1 specification	**4**
6.1	Description	**4**
6.1.1	General description	**4**
6.1.2	Qualifications on applicability to telecommunication services	**5**
6.2	Procedure	**5**
6.2.1	Provision/withdrawal	**5**
6.2.2	Normal procedures	**5**
6.2.3	Exceptional procedures	**5**
6.3	Interaction with other supplementary services and ANFs	**5**
6.3.1	Number identification services (SS-CLIP, SS-COLP, SS-CLIR)	**5**
6.3.2	Calling Name Identification Presentation (SS-CNIP)	**5**
6.3.3	Connected Name Identification Presentation (SS-CONP)	**5**
6.3.4	Calling/Connected Name Identification Restriction (SS-CNIR)	**5**
6.3.5	Call Completion to Busy Subscriber (SS-CCBS)	**5**
6.3.6	Call Completion on No Reply (SS-CCNR)	**5**
6.3.7	Call Transfer (SS-CT)	**5**
6.3.8	Call Forwarding Unconditional (SS-CFU)	**5**
6.3.9	Call Forwarding Busy (SS-CFB)	**6**
6.3.10	Call Forwarding No Reply (SS-CFNR)	**6**
6.3.11	Call Deflection (SS-CD)	**6**
6.3.12	Path Replacement (ANF-PR)	**6**
6.3.13	Call Offer (SS-CO)	**6**
6.3.14	Call Intrusion (SS-CI)	**6**
6.3.15	Do not Disturb (SS-DND)	**6**

© ISO/IEC 2000 – All rights reserved

Copyright International Organization for Standardization
Provided by IHS under license with ISO
No reproduction or networking permitted without license from IHS
Not for Resale

6.3.16 Do not Disturb Override (SS-DNDO) **6**
6.3.17 Advice of Charge (SS-AOC) **6**
6.3.18 Recall (SS-RE) **6**
6.3.19 Call Interception (ANF-CINT) **6**
6.3.20 Transit Counter (ANF-TC) **6**
6.3.21 Route Restriction Class (ANF-RRC) **6**
6.3.22 Message Waiting Indication (SS-MWI) **6**
6.3.23 Wireless Terminal Location Registration (SS-WTLR) **6**
6.3.24 Wireless Terminal Incoming Call (ANF-WTMI) **6**
6.3.25 Wireless Terminal Outgoing Call (ANF-WTMO) **6**
6.3.26 Wireless Terminal Authentication of a WTM User (SS-WTAT) **6**
6.3.27 Wireless Terminal Authentication of the PISN (SS-WTAN) **6**
6.3.28 Common Information (ANF-CMN) **7**
6.3.29 Call Priority Interruption (Protection) (SS-CPI(P)) **7**
6.3.30 Private User Mobility Registration (SS-PUMR) **7**
6.3.31 Private User Mobility Outgoing Call (ANF-PUMO) **7**

6.4 Interworking considerations **7**
6.5 Overall SDL **7**

7 ANF-PUMO stage 1 specification **7**

7.1 Description **7**

7.1.1 General description **7**
7.1.2 Qualifications on applicability to telecommunication services **8**

7.2 Procedure **8**

7.2.1 Provision/withdrawal **8**
7.2.2 Normal procedures **8**
7.2.3 Exceptional procedures **8**

7.3 Interaction with other supplementary services and ANFs **8**

7.3.1 Number identification services (SS-CLIP, SS-COLP, SS-CLIR) **8**
7.3.2 Calling Name Identification Presentation (SS-CNIP) **8**
7.3.3 Connected Name Identification Presentation (SS-CONP) **8**
7.3.4 Calling/Connected Name Identification Restriction (SS-CNIR) **8**
7.3.5 Call Completion to Busy Subscriber (SS-CCBS) **8**
7.3.6 Call Completion on No Reply (SS-CCNR) **8**
7.3.7 Call Transfer (SS-CT) **8**
7.3.8 Call Forwarding Unconditional (SS-CFU) **8**
7.3.9 Call Forwarding Busy (SS-CFB) **8**
7.3.10 Call Forwarding No Reply (SS-CFNR) **9**
7.3.11 Call Deflection (SS-CD) **9**
7.3.12 Path Replacement (ANF-PR) **9**
7.3.13 Call Offer (SS-CO) **9**
7.3.14 Call Intrusion (SS-CI) **9**
7.3.15 Do not Disturb (SS-DND) **9**
7.3.16 Do not Disturb Override (SS-DNDO) **9**
7.3.17 Advice of Charge (SS-AOC) **9**
7.3.18 Recall (SS-RE) **9**
7.3.19 Call Interception (ANF-CINT) **9**
7.3.20 Transit Counter (ANF-TC) **9**
7.3.21 Route Restriction Class (ANF-RRC) **9**
7.3.22 Message Waiting Indication (SS-MWI) **9**
7.3.23 Wireless Terminal Location Registration (SS-WTLR) **9**
7.3.24 Wireless Terminal Incoming Call (ANF-WTMI) **9**
7.3.25 Wireless Terminal Outgoing Call (ANF-WTMO) **9**
7.3.26 Wireless Terminal Authentication of a WTM User (SS-WTAT) **9**
7.3.27 Wireless Terminal Authentication of the PISN (SS-WTAN) **9**
7.3.28 Common Information (ANF-CMN) **9**
7.3.29 Call Priority Interruption (Protection) (SS-CPI(P)) **9**

© ISO/IEC 2000 – All rights reserved
Copyright International Organization for Standardization
Provided by IHS under license with ISO
No reproduction or networking permitted without license from IHS
Not for Resale

7.3.30 Private User Mobility Registration (SS-PUMR) **10**
7.3.31 Private User Mobility Incoming Call (ANF-PUMI) **10**

7.4 Interworking considerations **10**
7.5 Overall SDL **10**

8 ANF-PUMI stage 2 specification **10**

8.1 Functional model **10**

8.1.1 Functional model description **10**
8.1.2 Description of Functional Entities **11**
8.1.3 Relationship of functional model to basic call functional model **11**

8.2 Information flows **12**

8.2.1 Definition of information flows **12**
8.2.2 Relationship of information flows to basic call information flows **14**
8.2.3 Information flow sequences **14**

8.3 Functional Entity actions **19**

8.3.1 Actions of FE1 **19**
8.3.2 Actions of FE2 **19**
8.3.3 Actions of FE3 **20**
8.3.4 Actions of FE4 **20**
8.3.5 Actions of FE5 **20**

8.4 Functional entity behaviour **20**

8.4.1 Behaviour of FE1 **21**
8.4.2 Behaviour of FE2 **22**
8.4.3 Behaviour of FE3 **23**
8.4.4 Behaviour of FE4 **24**
8.4.5 Behaviour of FE5 **25**

8.5 Allocation of Functional Entities to physical equipment **26**
8.6 Interworking considerations **26**

9 ANF-PUMO stage 2 specification **26**

9.1 Functional model **26**

9.1.1 Functional model description **26**
9.1.2 Description of Functional Entities **27**
9.1.3 Relationship of functional model to basic call functional model **27**

9.2 Information flows **27**

9.2.1 Definition of information flows **27**
9.2.2 Relationship of information flows to basic call information flows **28**
9.2.3 Information flow sequences **28**

9.3 Functional Entity actions **29**

9.3.1 Actions of FE1 **29**
9.3.2 Actions of FE2 **29**

9.4 Functional entity behaviour **29**

9.4.1 Behaviour of FE1 **29**
9.4.2 Behaviour of FE2 **30**

9.5 Allocation of Functional Entities to physical equipment **30**
9.6 Interworking considerations **30**

© ISO/IEC 2000 – All rights reserved

Copyright International Organization for Standardization
Provided by IHS under license with ISO
No reproduction or networking permitted without license from IHS
Not for Resale

Foreword

ISO (the International Organization for Standardization) and IEC (the International Electrotechnical Commission) form the specialized system for worldwide standardization. National bodies that are members of ISO or IEC participate in the development of International Standards through technical committees established by the respective organization to deal with particular fields of technical activity. ISO and IEC technical committees collaborate in fields of mutual interest. Other international organizations, governmental and non-governmental, in liaison with ISO and IEC, also take part in the work.

International Standards are drafted in accordance with the rules given in the ISO/IEC Directives, Part 3.

In the field of information technology, ISO and IEC have established a joint technical committee, ISO/IEC JTC 1. Draft International Standards adopted by the joint technical committee are circulated to national bodies for voting. Publication as an International Standard requires approval by at least 75 % of the national bodies casting a vote.

Attention is drawn to the possibility that some of the elements of this International Standard may be the subject of patent rights. ISO and IEC shall not be held responsible for identifying any or all such patent rights.

International Standard ISO/IEC 17877 was prepared by ECMA (as ECMA-283) and was adopted, under a special “fast-track procedure”, by Joint Technical Committee ISO/IEC JTC 1, *Information technology*, in parallel with its approval by national bodies of ISO and IEC.

--`,,```,,,,````-`-`,,`,,`,`,,`---

© ISO/IEC 2000 – All rights reserved
Copyright International Organization for Standardization
Provided by IHS under license with ISO
No reproduction or networking permitted without license from IHS
Not for Resale

Introduction

This International Standard is one of a series of standards defining services and signalling procedures applicable to Private Integrated Services Networks (PISNs). The series uses ISDN concepts as developed by ITU-T and conforms to the framework of International Standards for Open Systems Interconnection as defined by ISO/IEC.

This International Standard specifies the Private User Mobility Incoming Call (PUMI) and the Private User Mobility Outgoing Call (PUMO) additional network features.

This International Standard is based upon the practical experience of ECMA member companies and the results of their active and continuous participation in the work of ISO/IEC JTC1, ITU-T, ETSI and other international and national standardization bodies. It represents a pragmatic and widely based consensus.

There is currently no equivalent service specified by ITU-T or ETSI for public ISDN.

© ISO/IEC 2000 – All rights reserved

Copyright International Organization for Standardization
Provided by IHS under license with ISO
No reproduction or networking permitted without license from IHS
Not for Resale

Information technology — Telecommunications and information exchange between systems — Private Integrated Services Network — Specification, functional model and information flows — Private User Mobility (PUM) — Call handling additional network features

1 Scope

This International Standard specifies the Additional Network Features (ANF) Private User Mobility Incoming Call (PUMI) and Private User Mobility Outgoing Call (PUMO), which are applicable to various basic services supported by Private Integrated Services Networks (PISN). Basic services are specified in ISO/IEC 11574.

ANF-PUMI is an additional network feature that directs incoming calls to a PUM user within a PISN regardless of the PUM user's geographical location within the PISN, provided the PUM user's location is known.

ANF-PUMO is an additional network feature that permits the PISN to process call requests from a PUM user at the home location, if required.

Additional network feature specifications are produced in three stages, according to the method described in ETS 300 387. This International Standard contains the stage 1 and stage 2 specifications of ANF-PUMI and ANF-PUMO. The stage 1 specification (clauses 6 and 7) specifies the general feature principles and capabilities. The stage 2 specification (clauses 8 and 9) identifies the Functional Entities involved in the additional network features and the information flows between them.

2 Conformance

In order to conform to this International Standard, a stage 3 standard shall specify signalling protocols and equipment behaviour that are capable of being used in a PISN which supports the additional network features specified in this International Standard. This means that, to claim conformance, a stage 3 standard is required to be adequate for the support of those aspects of clauses 6 and 7 (stage 1) and clauses 8 and 9 (stage 2) which are relevant to the interface or equipment to which the stage 3 standard applies.

3 Normative references

The following standards contain provisions which, through reference in this text, constitute provisions of this International Standard. At the time of publication, the editions indicated were valid. All standards are subject to revision, and parties to agreements based on this International Standard are encouraged to investigate the possibility of applying the most recent editions of the standards indicated below. Members of IEC and ISO maintain registers of currently valid International Standards.

ISO/IEC 11571:1998, *Information technology — Telecommunications and information exchange between systems — Private Integrated Services Network — Addressing.*

ISO/IEC 11574:1994, *Information technology — Telecommunications and information exchange between systems — Private Integrated Services Network — Circuit-mode 64 kbit/s bearer services — Service description, functional capabilities and information flows.*

ISO/IEC 11579-1:1994, *Information technology — Telecommunications and information exchange between systems — Private Integrated Services Network — Part 1: Reference configuration for PISN exchanges (PINX).*

ISO/IEC 13872:1995, *Information technology — Telecommunications and information exchange between systems — Private Integrated Services Network — Specification, functional model and information flows — Call diversion supplementary services.*

ISO/IEC 15428:1999, *Information technology — Telecommunications and information exchange between systems — Private Integrated Services Network — Specification, functional model and information flows — Wireless Terminal Location Registration supplementary service and Wireless Terminal Information Exchange additional network feature.*

ISO/IEC 17875:2000, *Information technology — Telecommunications and information exchange between systems — Private Integrated Services Network — Specification, functional model and information flows — Private User Mobility (PUM) — Registration supplementary service.*

--`,,```,,,,````-`-`,,`,,`,`,,`---

© ISO/IEC 2000 – All rights reserved

Copyright International Organization for Standardization
Provided by IHS under license with ISO
No reproduction or networking permitted without license from IHS
Not for Resale

CCITT Rec. I.130,1988, *Method for the characterization of telecommunication services supported by an ISDN and network capabilities of an ISDN (Blue Book).*

ITU-T Rec. I.112:1993, *Vocabulary of terms for ISDNs.*

ITU-T Rec. I.210:1993, *Principles of telecommunication services supported by an ISDN and the means to describe them.*

ITU-T Rec. Z.100:1993, *Specification and description language.*

4 Definitions

For the purposes of this International Standard the following definitions apply.

4.1 External definitions

This International Standard uses the following terms defined in other documents:

— Basic service (ITU-T Rec. I.210)

— Call (Basic call) (ISO/IEC 11574)

— PISN Number (ISO/IEC 11571)

— Private Integrated Services Network (PISN) (ISO/IEC 11579-1)

— Private Integrated Services Network Exchange (PINX) (ISO/IEC 11579-1)

— Service (ITU-T Rec. I.112)

— Signalling (ITU-T Rec. I.112)

— Supplementary Service (ITU-T Rec. I.210)

— User (ISO/IEC 11574)

This International Standard refers to the following basic call Functional Entities (FE) defined in ISO/IEC 11574:

— Call Control (CC)

— Call Control Agent (CCA)

This International Standard refers to the following basic call inter-FE relationships defined in ISO/IEC 11574:

— r1

— r2

— r3

This International Standard refers to the following basic call information flows defined in ISO/IEC 11574:

— SETUP request/indication

— SETUP response/confirm

— RELEASE request/indication

This International Standard refers to the following service elements defined for basic call control in ISO/IEC 11574:

— Call History

— Connection Type

— Destination Number

— Destination Subaddress

— Originating Number

— Originating Subaddress

© ISO/IEC 2000 – All rights reserved
Copyright International Organization for Standardization
Provided by IHS under license with ISO
No reproduction or networking permitted without license from IHS
Not for Resale

4.2 Additional network feature (ANF) : A capability provided by a PISN, not generally directly to a User, over and above that of the Basic call.

4.3 Alternative identifier : An identifier, other than the PISN number, which identifies the PUM user uniquely.

4.4 Destination number : The PISN number of the original called user.

4.5 Home Data Base (HDB) : The database in which the data on the current location and associated parameters of a Wireless terminal or a mobile user are stored.

4.6 Home PINX : The PINX that has direct access to the HDB entry for a particular PUM user.

4.7 Hosting address : The complete PISN number of the entity within the network to which incoming calls for the PUM user are directed by the Home PINX (i.e., the address where a PUM user is currently registered).

4.8 Incoming PUM call : A call where the called user is a PUM user.

4.9 Originating number : The PISN number of the user initiating a call.

4.10 Outgoing PUM call : A call originated by a PUM user.

4.11 Private User Mobility (PUM) : The capability of a PISN user to register at any PISN terminal, and so receive the PISN services at the hosting terminal.

4.12 PUM registration : The operation performed by a PUM user to inform the PISN of the PISN address that should be used for locating the user.

4.13 PUM user : A PISN user whose calls are processed by either or both of the PUMI and PUMO additional network features.

4.14 PUM user identity : A PUM number or alternative identifier used to uniquely identify the PUM user.

4.15 Visitor Data Base (VDB) : The database in which location information concerning a wireless terminal or a mobile user is stored, as long as the Wireless terminal or the mobile user are localized in the corresponding visitor area.

4.16 Visitor PINX : The PINX that has direct access to the VDB currently associated with a particular PUM user.

5 List of acronyms

ANF	Additional Network Feature
AOC	Advice Of Charge
CC	Call Control (Functional Entity)
CCA	Call Control Agent (Functional Entity)
CCBS	Call Completion to Busy Subscriber
CCNR	Call Completion on No Reply
CD	Call Deflection
CFB	Call Forwarding Busy
CFNR	Call Forwarding No Reply
CFU	Call Forwarding Unconditional
CI	Call Intrusion
CICL	Call Intrusion Capability Level
CINT	Call INTerception
CLIP	Calling Line Identification Presentation
CLIR	Calling/Connected Line Identification Restriction
CMN	CoMmoN Information
CNIP	Calling Name Identification Presentation
CNIR	Calling/Connected Name Identification Restriction

© ISO/IEC 2000 – All rights reserved

Copyright International Organization for Standardization
Provided by IHS under license with ISO
No reproduction or networking permitted without license from IHS
Not for Resale

CO	Call Offer
COLP	Connected Line Identification Presentation
CONP	Connected Name Identification Presentation
CPI	Call Priority Interruption
CPICL	Call Priority Interruption Capability Level
CPIP	Call Priority Interruption Protection
CPIPL	Call Priority Interruption Protection Level
CT	Call Transfer
DND	Do Not Disturb
DNDO	Do Not Disturb Override
FE	Functional Entity
FEA	Functional Entity Action
HDB	Home Data Base
ISDN	Integrated Services Digital Network
MWI	Message Waiting Indication
PINX	Private Integrated Services Network Exchange
PISN	Private Integrated Services Network
PR	Path Replacement
PUM	Private User Mobility
PUMI	PUM Incoming Call Handling
PUMO	PUM Outgoing Call Handling
RE	REcall
SDL	Specification and Description Language
SS	Supplementary Service
TC	Transit Counter
TE	Terminal Equipment
VDB	Visitor Data Base
WT	Wireless Terminal
WTAU	Wireless Terminal AUthentication
WTLR	Wireless Terminal Location Registration
WTM	Wireless Terminal Mobility
WTMI	Wireless Terminal Mobility Incoming call
WTMO	Wireless Terminal Mobility Outgoing call

6 ANF-PUMI stage 1 specification

6.1 Description

6.1.1 General description

PUM Incoming Call (PUMI) enables calls to be directed to a PUM user within the PISN. As there is no predetermined access for the connection of a PUM user to the PISN, the directing of such calls requires that information regarding the location of the user is available.

© ISO/IEC 2000 – All rights reserved
Copyright International Organization for Standardization
Provided by IHS under license with ISO
No reproduction or networking permitted without license from IHS
Not for Resale

6.1.2 Qualifications on applicability to telecommunication services

ANF-PUMI is applicable to all basic services defined in ISO/IEC 11574.

6.2 Procedure

6.2.1 Provision/withdrawal

ANF-PUMI shall be PISN instigated.

6.2.2 Normal procedures

6.2.2.1 Activation/deactivation/registration/interrogation

ANF-PUMI shall be permanently activated.

Registration and interrogation are not applicable to this ANF.

6.2.2.2 Invocation and operation

For each PUM user, information shall be maintained relating to the location of the PUM user within the PISN.

ANF-PUMI shall be invoked for an incoming call when analysis of the destination number indicates that the called user is a PUM user. Once invoked, ANF-PUMI shall route the call to the PUM user using the destination number to determine the current address of the PUM user within the PISN.

Further processing of the call shall follow normal basic call procedures.

6.2.3 Exceptional procedures

6.2.3.1 Activation/deactivation/registration/interrogation

Not applicable.

6.2.3.2 Invocation and operation

If the PISN is unable to complete an incoming call to a PUM user, an indication that the call was unsuccessful shall be sent to the calling user. Normal basic call failure procedures shall be used.

6.3 Interaction with other supplementary services and ANFs

Interactions with other supplementary services and ANFs for which PISN standards were available at the time of publication of this International Standard are specified below.

6.3.1 Number identification services (SS-CLIP, SS-COLP, SS-CLIR)

No interaction.

NOTE 1 - Regardless of any other arrangements for alternative identification of a PUM user within the PISN, the only meaningful number to be used by SS-COLP is the PUM user's PISN number.

6.3.2 Calling Name Identification Presentation (SS-CNIP)

No Interaction.

6.3.3 Connected Name Identification Presentation (SS-CONP)

No interaction.

6.3.4 Calling/Connected Name Identification Restriction (SS-CNIR)

No interaction

6.3.5 Call Completion to Busy Subscriber (SS-CCBS)

No interaction.

6.3.6 Call Completion on No Reply (SS-CCNR)

No interaction.

6.3.7 Call Transfer (SS-CT)

No interaction.

6.3.8 Call Forwarding Unconditional (SS-CFU)

NOTE 2 - Calls to a PUM user should not be affected by any Call Forward activated for the hosting PISN number.

If the PUM user subscribes to SS-CFU and SS-CFU is active, the invocation of SS-CFU shall take precedence over the directing of calls to the PUM user.

--`,,```,,,,````-`-`,,`,,`,`,,`---

© ISO/IEC 2000 – All rights reserved

Copyright International Organization for Standardization
Provided by IHS under license with ISO
No reproduction or networking permitted without license from IHS
Not for Resale

6.3.9 Call Forwarding Busy (SS-CFB)

NOTE 3 - Calls to a PUM user should not be affected by any Call Forward activated for the hosting PISN number.

No interaction.

6.3.10 Call Forwarding No Reply (SS-CFNR)

NOTE 4 - Calls to a PUM user should not be affected by any Call Forward activated for the hosting PISN number.

No interaction.

6.3.11 Call Deflection (SS-CD)

NOTE 5 - Calls to a PUM user should not be affected by any Call Forward activated for the hosting PISN number.

No interaction.

6.3.12 Path Replacement (ANF-PR)

No interaction.

6.3.13 Call Offer (SS-CO)

No interaction.

6.3.14 Call Intrusion (SS-CI)

No interaction.

6.3.15 Do not Disturb (SS-DND)

No interaction.

6.3.16 Do not Disturb Override (SS-DNDO)

No interaction.

6.3.17 Advice of Charge (SS-AOC)

No interaction.

6.3.18 Recall (SS-RE)

No interaction.

6.3.19 Call Interception (ANF-CINT)

No interaction.

6.3.20 Transit Counter (ANF-TC)

No interaction.

6.3.21 Route Restriction Class (ANF-RRC)

No interaction.

6.3.22 Message Waiting Indication (SS-MWI)

No interaction.

6.3.23 Wireless Terminal Location Registration (SS-WTLR)

An incoming call to a PUM user registered on a Wireless terminal may be rejected if it occurs while SS-WTLR is invoked.

6.3.24 Wireless Terminal Incoming Call (ANF-WTMI)

No interaction.

6.3.25 Wireless Terminal Outgoing Call (ANF-WTMO)

No interaction.

6.3.26 Wireless Terminal Authentication of a WTM User (SS-WTAT)

No interaction.

6.3.27 Wireless Terminal Authentication of the PISN (SS-WTAN)

No interaction.

--`,,```,,,,````-`-`,,`,,`,`,,`---

© ISO/IEC 2000 – All rights reserved

Copyright International Organization for Standardization
Provided by IHS under license with ISO
No reproduction or networking permitted without license from IHS

Not for Resale

6.3.28 Common Information (ANF-CMN)

No interaction.

6.3.29 Call Priority Interruption (Protection) (SS-CPI(P))

No interaction.

6.3.30 Private User Mobility Registration (SS-PUMR)

An incoming call to a PUM user may be rejected if it occurs while SS-PUMR is invoked.

6.3.31 Private User Mobility Outgoing Call (ANF-PUMO)

No interaction.

6.4 Interworking considerations

Not applicable.

6.5 Overall SDL

Figure 1 contains the dynamic description of ANF-PUMI using the Specification and Description Language (SDL) defined in ITU-T Rec. Z.100 (1993). The SDL process represents the behaviour of the PISN in providing ANF-PUMI. Input/output symbols represent stimuli from/to basic call control.

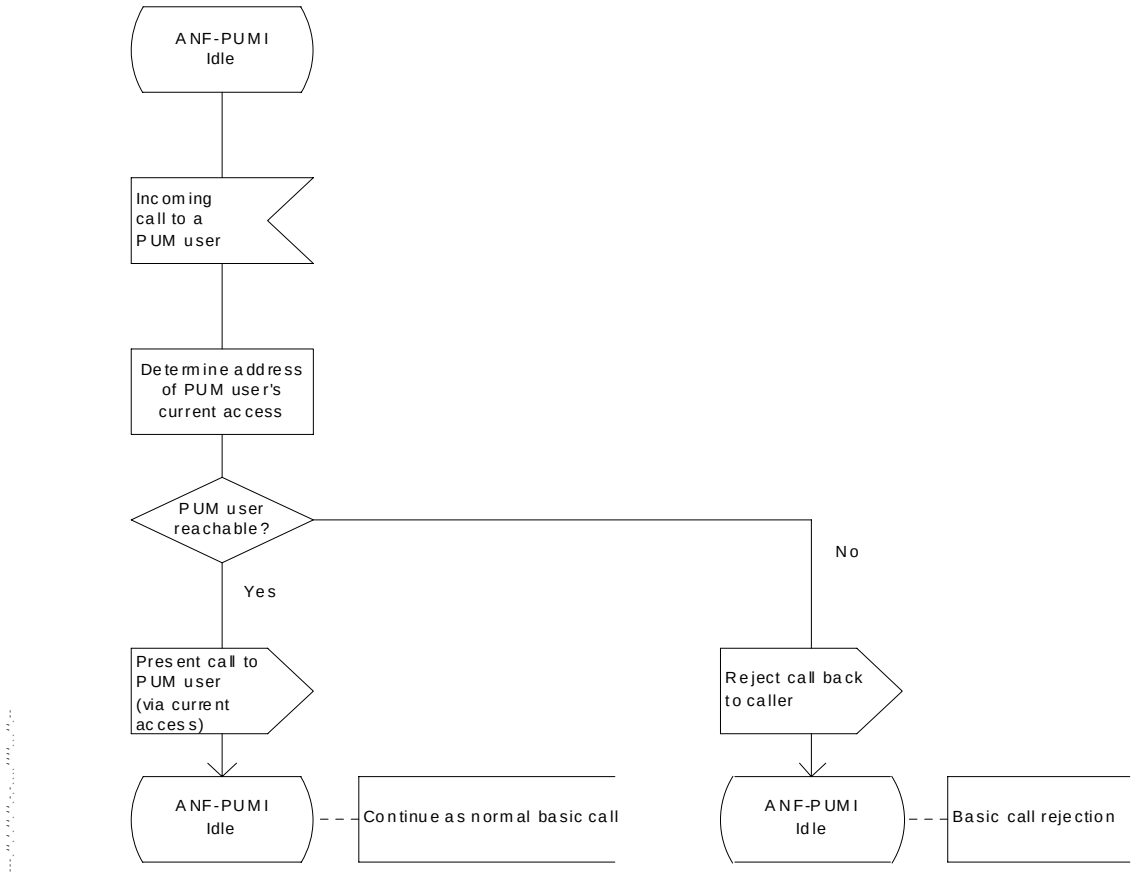

Figure 1 — ANF-PUMI, overall SDL

7 ANF-PUMO stage 1 specification

7.1 Description

7.1.1 General description

PUM Outgoing Call (PUMO) permits the PISN to process call requests from a PUM user at the home location, if required.

NOTE 6 - Actions that may be performed at the visited location (e.g., verification of the PUM user's identity, local access to the service profile, local call processing) are outside the scope of this International Standard.

© ISO/IEC 2000 – All rights reserved

Copyright International Organization for Standardization
Provided by IHS under license with ISO
No reproduction or networking permitted without license from IHS
Not for Resale

7.1.2 Qualifications on applicability to telecommunication services

ANF-PUMO is applicable to all basic services defined in ISO/IEC 11574.

7.2 Procedure

7.2.1 Provision/withdrawal

ANF-PUMO shall be PISN instigated.

7.2.2 Normal procedures

7.2.2.1 Activation/deactivation/registration/interrogation

ANF-PUMO shall be permanently activated.

Registration and interrogation are not applicable to this ANF.

7.2.2.2 Invocation and operation

ANF-PUMO is an extension of basic call control which replaces certain procedures that basic call control is unable to perform satisfactorily for PUM users. It may be invoked when a call request or a request for a supplementary service is recognized as being initiated by a PUM user. The originating number shall be set to the complete PISN number of the PUM user, unless it is already that and the call shall be processed at the PUM user's home location.

7.2.3 Exceptional procedures

7.2.3.1 Activation/deactivation/registration/interrogation

Not applicable.

7.2.3.2 Invocation and operation

The PISN may reject the call request with an appropriate failure indication for any of the following reasons:

— no originating number provided;

— the indicated PUM user is not registered at the indicated access.

Additionally all restrictions and exceptional procedures for basic call establishment shall apply.

7.3 Interaction with other supplementary services and ANFs

Interactions with other supplementary services and ANFs for which PISN standards were available at the time of publication of this International Standard are specified below.

7.3.1 Number identification services (SS-CLIP, SS-COLP, SS-CLIR)

No interaction.

7.3.2 Calling Name Identification Presentation (SS-CNIP)

No Interaction.

7.3.3 Connected Name Identification Presentation (SS-CONP)

No interaction.

7.3.4 Calling/Connected Name Identification Restriction (SS-CNIR)

No interaction.

7.3.5 Call Completion to Busy Subscriber (SS-CCBS)

No interaction.

7.3.6 Call Completion on No Reply (SS-CCNR)

No interaction.

7.3.7 Call Transfer (SS-CT)

No interaction.

7.3.8 Call Forwarding Unconditional (SS-CFU)

No interaction.

7.3.9 Call Forwarding Busy (SS-CFB)

No interaction.

© ISO/IEC 2000 – All rights reserved
Copyright International Organization for Standardization
Provided by IHS under license with ISO
No reproduction or networking permitted without license from IHS
Not for Resale

7.3.10 Call Forwarding No Reply (SS-CFNR)

No interaction.

7.3.11 Call Deflection (SS-CD)

No interaction.

7.3.12 Path Replacement (ANF-PR)

No interaction.

7.3.13 Call Offer (SS-CO)

No interaction.

7.3.14 Call Intrusion (SS-CI)

No interaction.

7.3.15 Do not Disturb (SS-DND)

No interaction.

7.3.16 Do not Disturb Override (SS-DNDO)

No interaction.

7.3.17 Advice of Charge (SS-AOC)

No interaction.

NOTE 7 - Care must be taken to ensure that the served user for SS-AOC is the PUM user rather than the user normally associated with the hosting address.

7.3.18 Recall (SS-RE)

No interaction.

7.3.19 Call Interception (ANF-CINT)

No interaction.

7.3.20 Transit Counter (ANF-TC)

No interaction.

7.3.21 Route Restriction Class (ANF-RRC)

No interaction.

7.3.22 Message Waiting Indication (SS-MWI)

No interaction.

7.3.23 Wireless Terminal Location Registration (SS-WTLR)

No interaction.

7.3.24 Wireless Terminal Incoming Call (ANF-WTMI)

No interaction.

7.3.25 Wireless Terminal Outgoing Call (ANF-WTMO)

No interaction.

7.3.26 Wireless Terminal Authentication of a WTM User (SS-WTAT)

No interaction.

7.3.27 Wireless Terminal Authentication of the PISN (SS-WTAN)

No interaction.

7.3.28 Common Information (ANF-CMN)

No interaction.

7.3.29 Call Priority Interruption (Protection) (SS-CPI(P))

No interaction.

© ISO/IEC 2000 – All rights reserved

Copyright International Organization for Standardization
Provided by IHS under license with ISO
No reproduction or networking permitted without license from IHS
Not for Resale

7.3.30 Private User Mobility Registration (SS-PUMR)

No interaction.

7.3.31 Private User Mobility Incoming Call (ANF-PUMI)

No interaction.

7.4 Interworking considerations

Not applicable.

7.5 Overall SDL

Figure 2 contains the dynamic description of ANF-PUMO using the Specification and Description Language (SDL) defined in ITU-T Rec. Z.100 (1993). The SDL process represents the behaviour of the PISN in providing ANF-PUMO. Input/output symbols represent stimuli from/to basic call control.

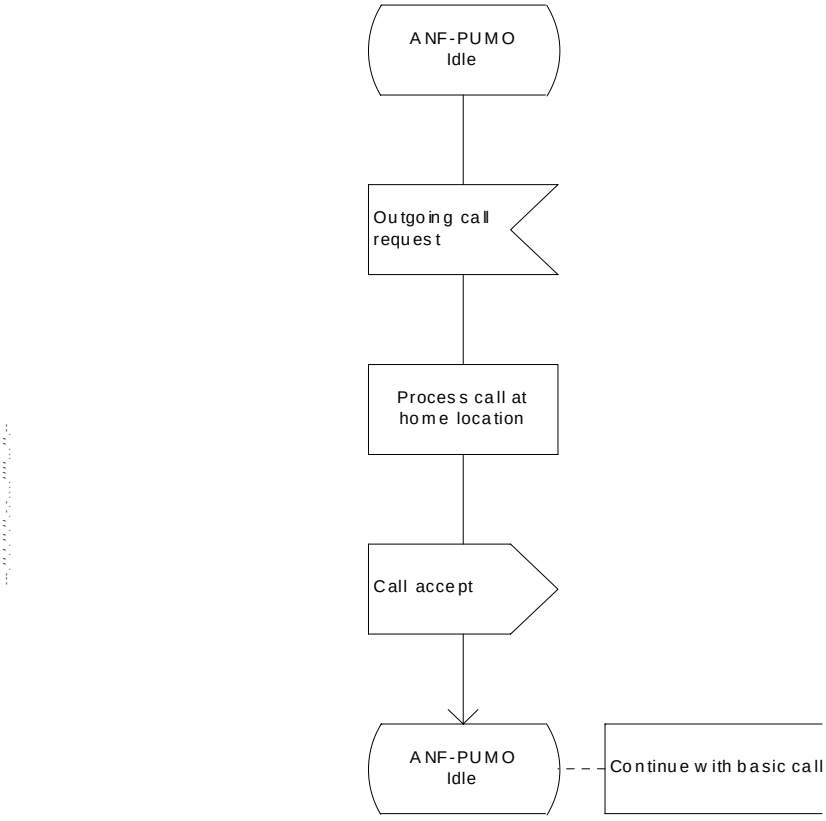

Figure 2 — ANF-PUMO, overall SDL

8 ANF-PUMI stage 2 specification

8.1 Functional model

8.1.1 Functional model description

The functional model shall comprise the following Functional Entities (FE):

FE1 PUM incoming call execution entity;

FE2 PUM incoming call detection and control entity;

FE3 Routing information provision entity;

FE4 Visited location control and execution entity;

FE5 PUM user's service agent entity.

© ISO/IEC 2000 – All rights reserved
Copyright International Organization for Standardization
Provided by IHS under license with ISO
No reproduction or networking permitted without license from IHS
Not for Resale

The following functional relationships shall exist between these FEs:

ra between FE1 and FE2;

rb between FE2 and FE3;

rc between FE1 and FE4 and between FE4 and FE5.

Figure 3 shows these FEs and relationships.

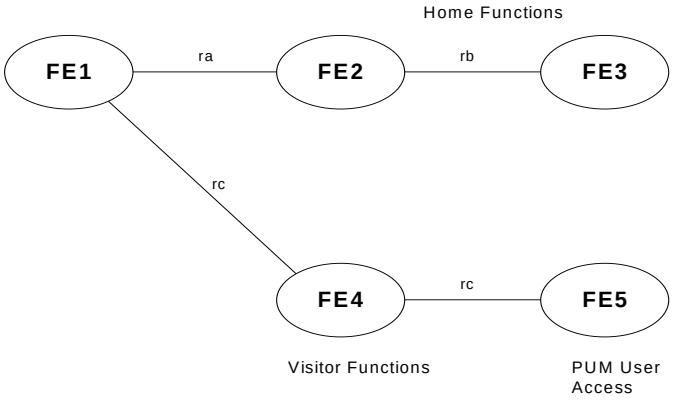

Figure 3 — Functional model for the handling of an incoming call to a PUM user

8.1.2 Description of Functional Entities

8.1.2.1 PUM incoming call execution entity, FE1

On request from FE2, this FE directs an incoming call to the PUM user by initiating a new call establishment towards the PUM user's location and passing the PUM user's identity.

8.1.2.2 PUM incoming call detection and control entity, FE2

This FE detects an incoming call to a PUM user and requests FE1 to redirect the call to the PUM user's location on the basis of information obtained from FE3.

8.1.2.3 Routing information provision entity, FE3

This FE provides details of the PUM user's location within the PISN to FE2 on request.

8.1.2.4 Visited location control and execution entity, FE4

This FE detects the incoming call and directs it to the PUM user's indicated PISN access.

8.1.2.5 PUM user's service agent entity, FE5

This FE delivers incoming call notification to the PUM user.

8.1.3 Relationship of functional model to basic call functional model

An example of a relationship between the FEs for ANF-PUMI and the FEs for the basic call is shown in figure 4. This example is used as the basis for the information flow sequence diagrams in 8.2.3.

© ISO/IEC 2000 – All rights reserved

Copyright International Organization for Standardization
Provided by IHS under license with ISO
No reproduction or networking permitted without license from IHS
Not for Resale

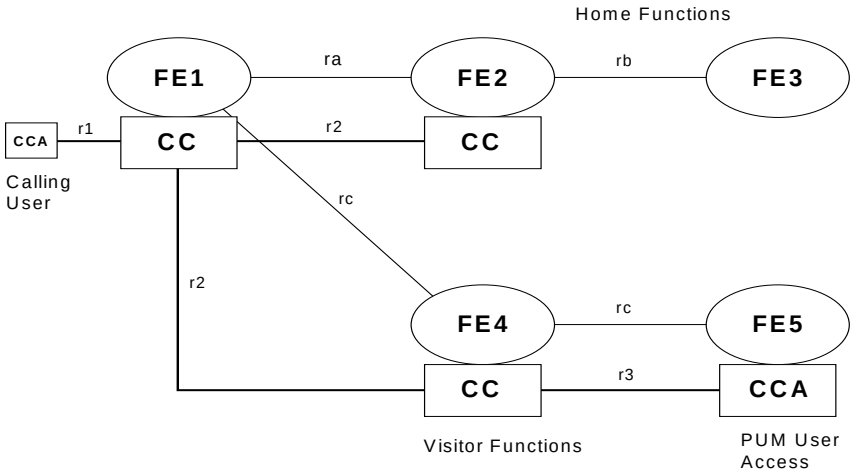

Figure 4 — Example relationship between the model for ANF-PUMI and basic call

8.2 Information flows

8.2.1 Definition of information flows

In the tables listing the service elements in information flows, the column headed "Request" indicates which of these elements are mandatory (M) and which are optional (O) in a request/indication information flow, and the column headed "Confirm" (confirmed information flows only) indicates which of these elements are mandatory (M) and which are optional (O) in a response/confirmation information flow.

8.2.1.1 Relationship ra

8.2.1.1.1 DIVERT

DIVERT is a confirmed information flow which is used to cause FE1 to direct an incoming call to a PUM user. It shall be sent across relationship ra from FE2 to FE1. Table 1 lists the elements within the DIVERT information flow.

NOTE 8 - The elements of the DIVERT information flow shown in table 1 are only those required by ANF-PUMI. For the successful operation of other supplementary services and ANFs, it may be necessary to include additional elements.

Table 1 — Contents of DIVERT

Service element	Allowed value	Request	Confirm
PUM user's hosting address	PISN number	M	
Connection type		M (NOTE 9)	
Calling user's PISN number		M (NOTE 9)	
Calling user's subaddress (Originating Subaddress)		O (NOTE 9)	
Calling user's name		O (NOTE 10)	
PUM user's Identity	(NOTE 11)	M	
PUM user's subaddress (Destination Subaddress)		O (NOTE 9)	
Call History		O (NOTE 9)	
Divert result	Accepted or Rejected		M

NOTE 9 - This service element shall be obtained from the basic call SETUP request/indication information flow.

NOTE 10 - This service element, if included, shall be as defined for SS-CNIP.

NOTE 11 - This service element may be the PUM user's complete PISN number or an equivalent unique identifier or both.

© ISO/IEC 2000 – All rights reserved
Copyright International Organization for Standardization
Provided by IHS under license with ISO
No reproduction or networking permitted without license from IHS
Not for Resale

8.2.1.2 Relationship rb

8.2.1.2.1 ENQUIRE

ENQUIRE is a confirmed information flow that conveys a request to provide information regarding the current location of the PUM user from FE2 to FE3. It shall be sent across relationship rb. Table 2 lists the elements within the ENQUIRE information flow.

NOTE 12 - The elements of the ENQUIRE information flow shown in table 2 are only those required by ANF-PUMI. For the successful operation of other supplementary services and ANFs, it may be necessary to include additional elements, such as capability and protection levels for Call Intrusion and Do Not Disturb Override.

Table 2 — Contents of ENQUIRE

Service element	Allowed value	Request	Confirm
PUM user's destination number		M	
PUM user's Identity	(NOTE 13)		O (NOTE 14)
Connection type		M	
Enquiry result	- PUM user's hosting address - Call Forward Unconditional activated - Collision with PUM Registration - PUM user unknown - PUM user's location not known - Incompatible basic services		M
PUM user's diverted-to address			O (NOTE 15)
PUM user's diversion subscription options			O (NOTE 15)
PUM user's name			O (NOTE 15)

NOTE 13 - This service element may be the PUM user's complete PISN number or an equivalent unique identifier or both.

NOTE 14 - If the Enquiry result contains the PUM user's hosting address, this service element shall be included.

NOTE 15 - This optional service element shall be included if the Enquiry result is "Call Forward Unconditional activated" and if the information is available.

NOTE 16 - There are several failure reasons specific to PUM calls. Table 3 below illustrates how these can be mapped to existing standardized cause values. In all the cases shown in table 3 the location field should be set to "private network serving the remote user".

Table 3 — Mapping of PUMI failure reasons to basic call cause values

Failure reason	Standardized cause value		Standardized diagnostics
PUM user unknown	1	Unallocated (unassigned) number	Permanent
PUM user's location not known	3	No route to destination	Transient
PUM user deregistered	20	Subscriber absent	Transient
Collision with WTM location registration or PUM registration	41	Temporary failure	--

© ISO/IEC 2000 – All rights reserved

Copyright International Organization for Standardization
Provided by IHS under license with ISO
No reproduction or networking permitted without license from IHS
Not for Resale

8.2.1.3 Relationship rc

8.2.1.3.1 INFORM

INFORM is an unconfirmed information flow that conveys the PUM user's identity from FE1 to FE4 and from FE4 to FE5. It shall be sent across relationship rc. Table 4 lists the elements within the INFORM information flow.

Table 4 — Contents of INFORM

Service element	Allowed value	Request
PUM user's Identity	(NOTE 17)	M

NOTE 17 - This service element may be the PUM user's complete PISN number or an equivalent unique identifier or both.

8.2.2 Relationship of information flows to basic call information flows

Table 5 specifies the relationships of the ANF-PUMI information flows with those of the basic call.

Table 5 — Relationship of the ANF-PUMI information flows with the basic call

Information flow			Independent of basic call flow	With basic call flow	Basic call flows
ra	DIVERT	request	yes	no	
rb	ENQUIRE	request	yes	no	
rc	INFORM	request	no	yes	r2_SETUP req/ind

8.2.3 Information flow sequences

A stage 3 standard for ANF-PUMI shall provide signalling procedures in support of the information flow sequences specified below. In addition, signalling procedures should be provided to cover other sequences arising from error situations, interactions with basic call, interactions with other supplementary services, different topologies, etc.

In the figures, ANF-PUMI information flows are represented by solid arrows and basic call information flows are represented by broken arrows. An ellipse embracing two information flows indicates that the two information flows occur simultaneously. Within a column representing a ANF-PUMI functional entity, the numbers refer to functional entity actions listed in 8.3

The following abbreviations are used:

req request;

ind indication;

resp response;

conf confirm.

--`,,```,,,,````-`-`,,`,,`,`,,`---
© ISO/IEC 2000 – All rights reserved
Copyright International Organization for Standardization
Provided by IHS under license with ISO
No reproduction or networking permitted without license from IHS
Not for Resale

8.2.3.1 Normal operation

Figure 5 shows the information flow sequence for successful PUMI operation.

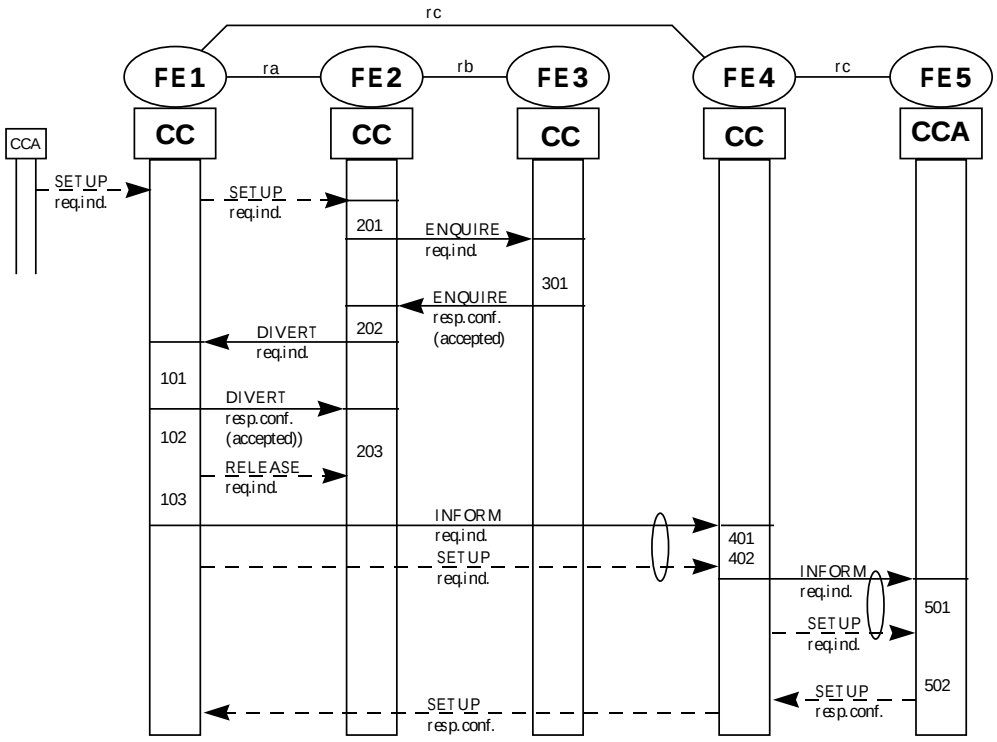

Figure 5 — Information flow sequence for ANF-PUMI - normal operation

© ISO/IEC 2000 – All rights reserved

Copyright International Organization for Standardization
Provided by IHS under license with ISO
No reproduction or networking permitted without license from IHS
Not for Resale

8.2.3.2 Unsuccessful operation: PUM user not known at Home PINX

Figure 6 shows the information flow sequence for unsuccessful PUMI operation for the case where the PUM user is not known at the Home PINX.

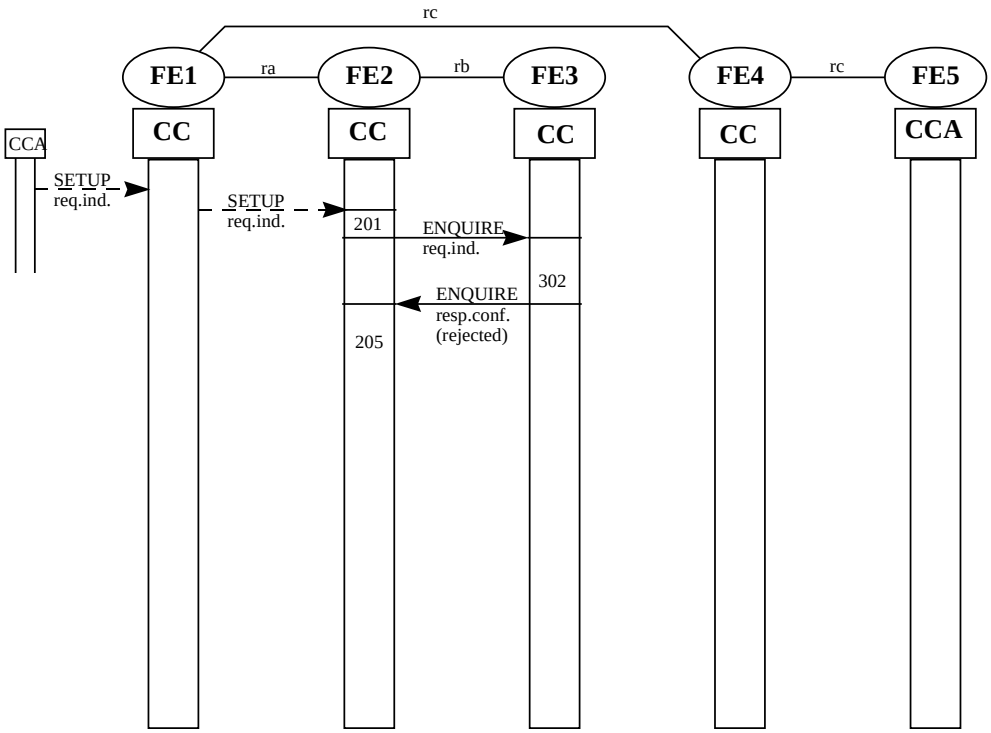

Figure 6 — Information flow sequence for unsuccessful PUMI operation: PUM user not known at Home PINX

--`,,```,,,,````-`-`,,`,,`,`,,`---

© ISO/IEC 2000 – All rights reserved
Copyright International Organization for Standardization
Provided by IHS under license with ISO
No reproduction or networking permitted without license from IHS
Not for Resale

8.2.3.3 Unsuccessful operation: Rejection of Diversion

Figure 7 shows the information flow sequence for unsuccessful PUMI operation for the case where rejection of the diversion request occurs.

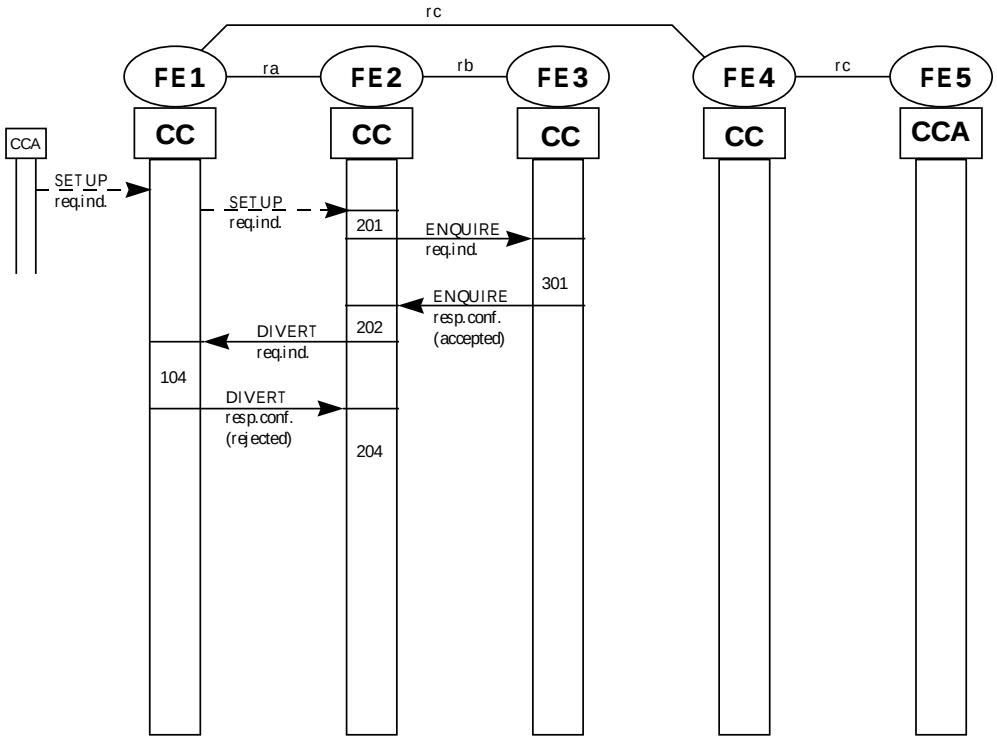

Figure 7 — Information flow sequence for unsuccessful PUMI operation: Rejection of Diversion

© ISO/IEC 2000 – All rights reserved

Copyright International Organization for Standardization
Provided by IHS under license with ISO
No reproduction or networking permitted without license from IHS
Not for Resale

8.2.3.4 Unsuccessful operation: PUM user not known at Visitor PINX

Figure 8 shows the information flow sequence for unsuccessful PUMI operation for the case where the PUM user is not known at the Visitor PINX.

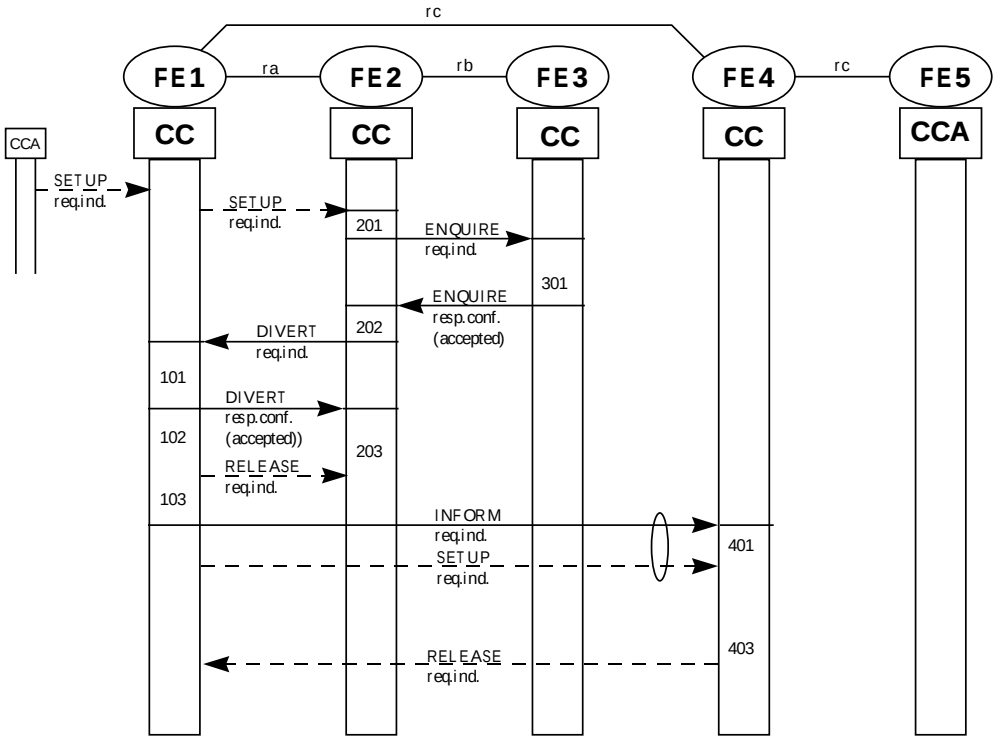

Figure 8 — Information flow sequence for unsuccessful PUMI operation: PUM user not known at Visitor PINX

© ISO/IEC 2000 – All rights reserved
Copyright International Organization for Standardization
Provided by IHS under license with ISO
No reproduction or networking permitted without license from IHS
Not for Resale

8.2.3.5 Unsuccessful operation: PUM user not accessible

Figure 9 shows the information flow sequence for unsuccessful PUMI operation for the case where the PUM user is not accessible.

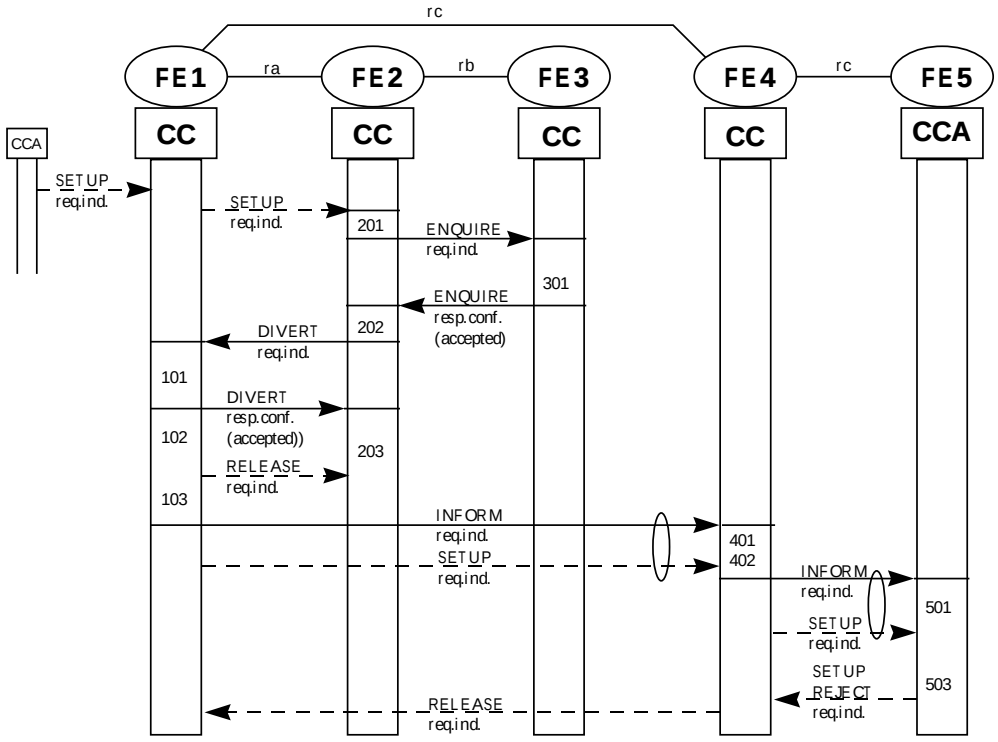

Figure 9 — Information flow sequence for unsuccessful PUMI operation: PUM user not accessible

8.3 Functional Entity actions

The following FE actions shall occur at the points indicated in the figures of 8.2.3.

8.3.1 Actions of FE1

101: The FE shall receive a DIVERT req/ind information flow from FE2, formulate a positive DIVERT resp/conf information flow and send it to FE2.

102: The FE shall stimulate release of original basic call towards the PUM user.

103: The FE shall stimulate new call setup using the PUM user's hosting address. The FE shall use the PUM user's identity already provided in the DIVERT resp/conf information flow to generate an INFORM req/ind information flow, and send it to FE4 with the basic call SETUP req/ind information flow.

104: The FE shall receive a DIVERT req/ind information flow from FE2, formulate a negative DIVERT resp/conf information flow and send it to FE2.

8.3.2 Actions of FE2

201: The FE shall detect an incoming call to a PUM user and shall send an ENQUIRE req/ind information flow to FE3.

202: The FE shall receive a positive ENQUIRE resp/conf information flow from FE3, shall use the contents of the information flow to construct and send a DIVERT req/ind information flow to FE1.

203: The FE shall receive a positive DIVERT resp/conf information flow from FE1.

204: The FE shall receive a negative DIVERT resp/conf information flow from FE1 and shall stimulate the release of the original basic call or try another FE1.

205: The FE shall receive a negative ENQUIRE resp/conf information flow from FE3 and shall stimulate the release of the original basic call.

© ISO/IEC 2000 – All rights reserved

Copyright International Organization for Standardization
Provided by IHS under license with ISO
No reproduction or networking permitted without license from IHS
Not for Resale

8.3.3 Actions of FE3

301: The FE shall receive an ENQUIRE req/ind information flow from FE2, retrieve the PISN number corresponding to the PUM user's hosting address from the HDB, and formulate a positive ENQUIRE resp/conf information flow and send it to FE2.

302: The FE shall receive an ENQUIRE req/ind information flow from FE2, formulate a negative ENQUIRE resp/conf information flow and send it to FE2.

8.3.4 Actions of FE4

401: The FE shall receive an INFORM req/ind information flow with the basic call SETUP req/ind information flow from FE1.

402: If the PUM user is registered at the Visitor PINX, the FE shall stimulate basic call establishment to the address where the PUM user is registered and send an INFORM req/ind information flow with the SETUP req/ind information flow.

403: If the PUM user is not registered at the Visitor PINX, the FE shall stimulate the release of basic call.

8.3.5 Actions of FE5

501: The FE shall receive an INFORM req/ind information flow from FE4 with the basic call SETUP req/ind information flow.

502: If the PUM user is accessible, the FE shall stimulate basic call establishment to the PUM user.

503: If the PUM user is not accessible, the FE shall stimulate the release of basic call.

8.4 Functional entity behaviour

The FE behaviours shown below are intended to illustrate typical FE behaviour in terms of information flows sent and received.

The behaviour of each FE is shown using the Specification and Description Language (SDL) defined in ITU-T Rec. Z.100 (1993). Each input and output symbol is labelled to show the source FE of input signals or the destination FE of output signals.

© ISO/IEC 2000 – All rights reserved
Copyright International Organization for Standardization
Provided by IHS under license with ISO
No reproduction or networking permitted without license from IHS
Not for Resale

8.4.1 Behaviour of FE1

Figure 10 shows the normal behaviour of FE1.

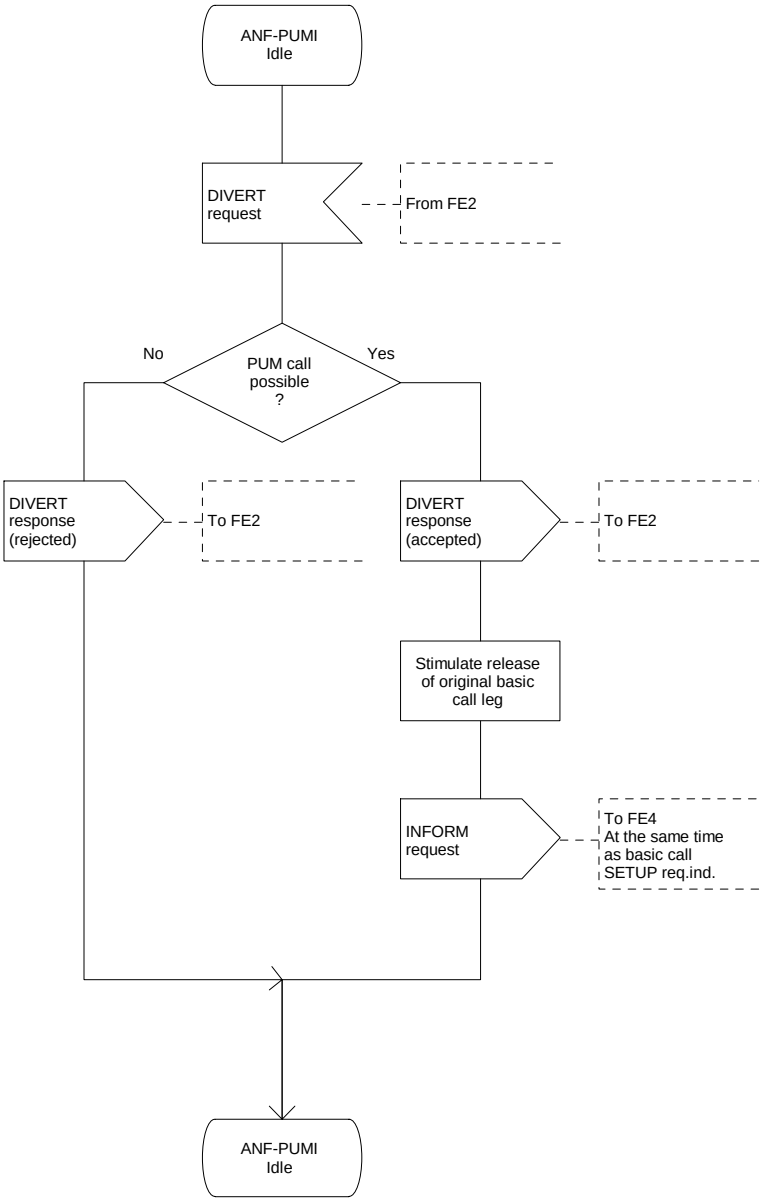

Figure 10 — ANF-PUMI, SDL for FE1

© ISO/IEC 2000 – All rights reserved

Copyright International Organization for Standardization
Provided by IHS under license with ISO
No reproduction or networking permitted without license from IHS
Not for Resale

8.4.2 Behaviour of FE2

Figure 11 shows the normal behaviour of FE2.

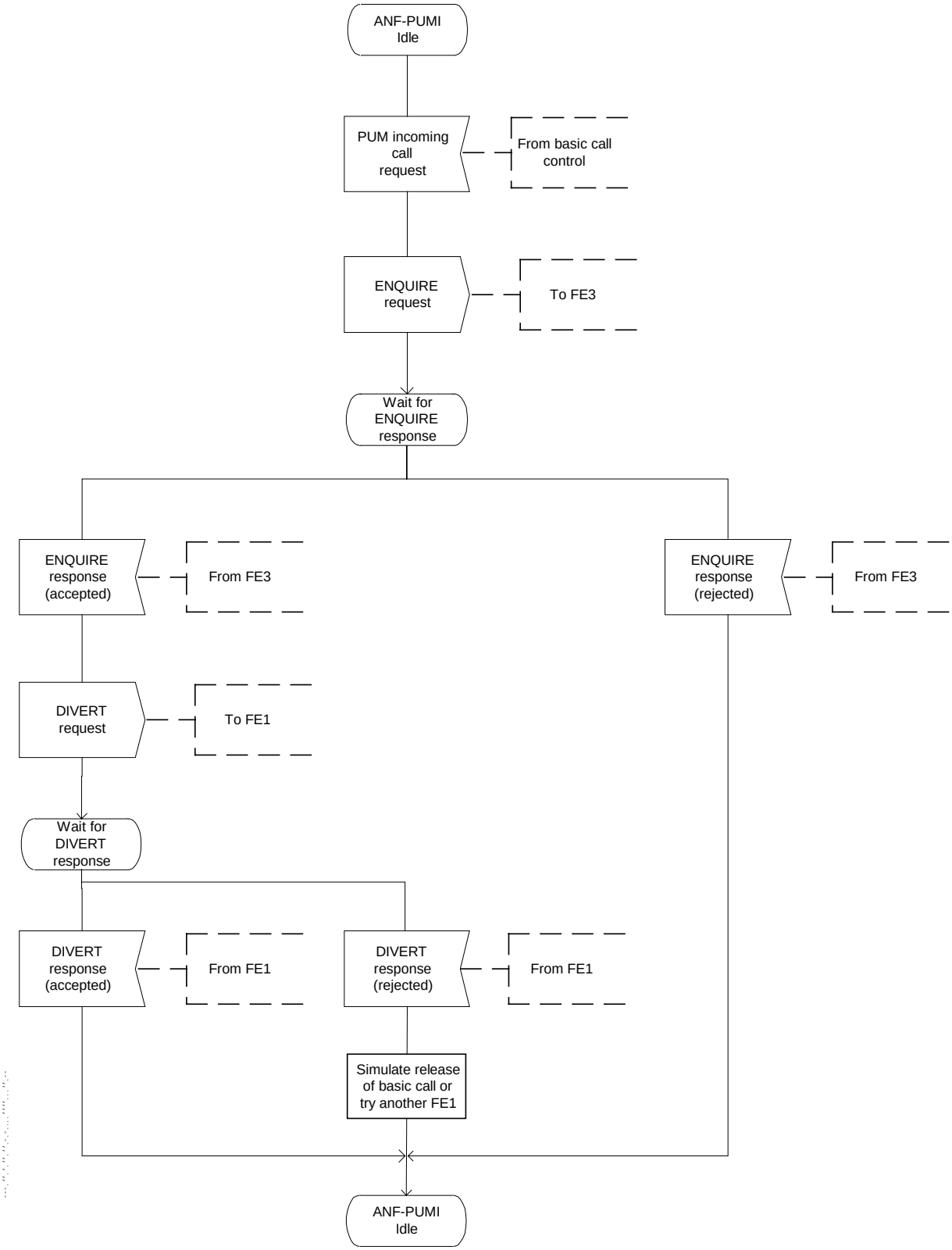

Figure 11 — ANF-PUMI, SDL for FE2

© ISO/IEC 2000 – All rights reserved
Copyright International Organization for Standardization
Provided by IHS under license with ISO
No reproduction or networking permitted without license from IHS
Not for Resale

8.4.3 Behaviour of FE3

Figure 12 shows the normal behaviour of FE3.

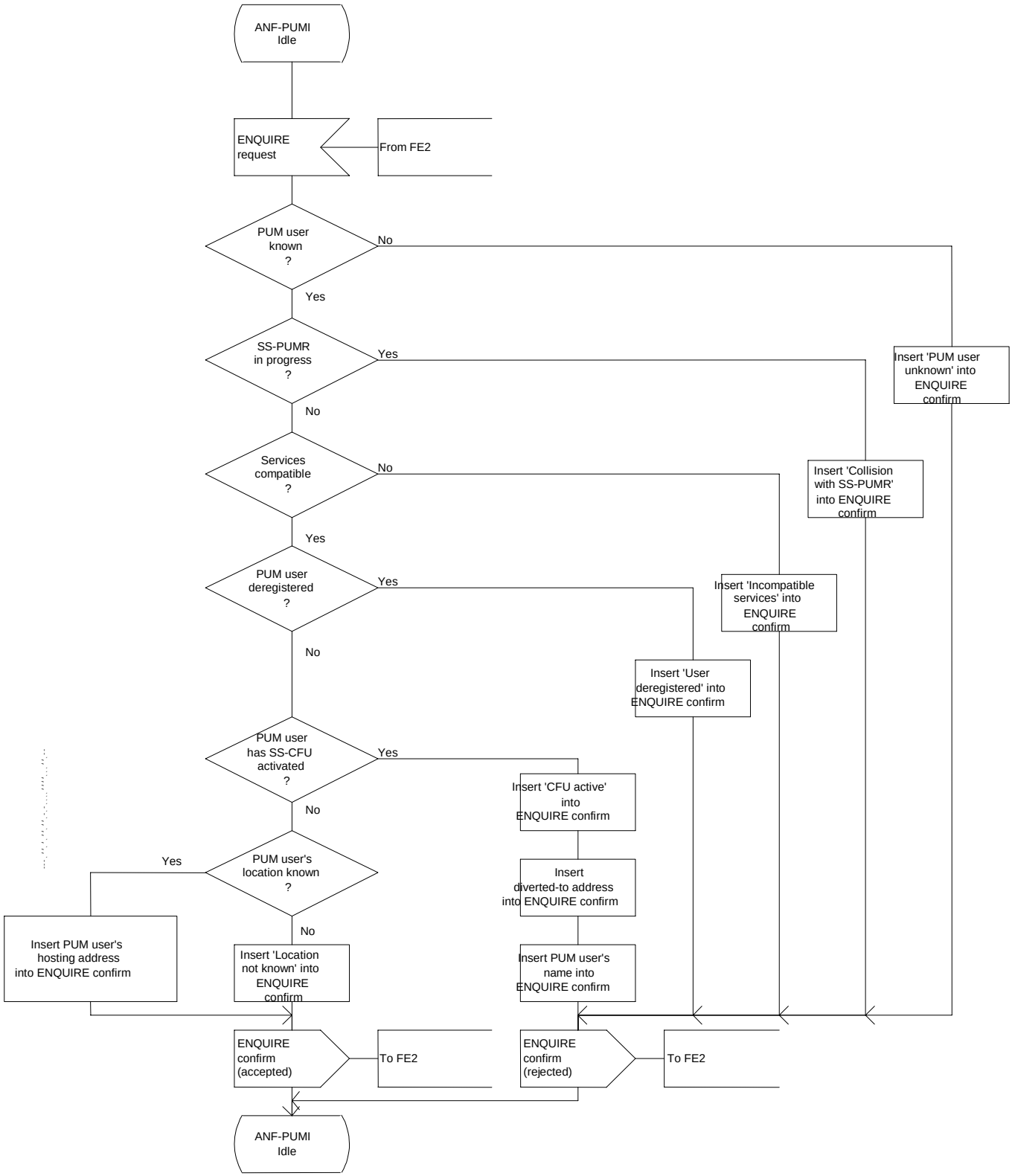

Figure 12 — ANF-PUMI, SDL for FE3

© ISO/IEC 2000 – All rights reserved

Copyright International Organization for Standardization
Provided by IHS under license with ISO
No reproduction or networking permitted without license from IHS
Not for Resale

8.4.4 Behaviour of FE4

Figure 13 shows the normal behaviour of FE4.

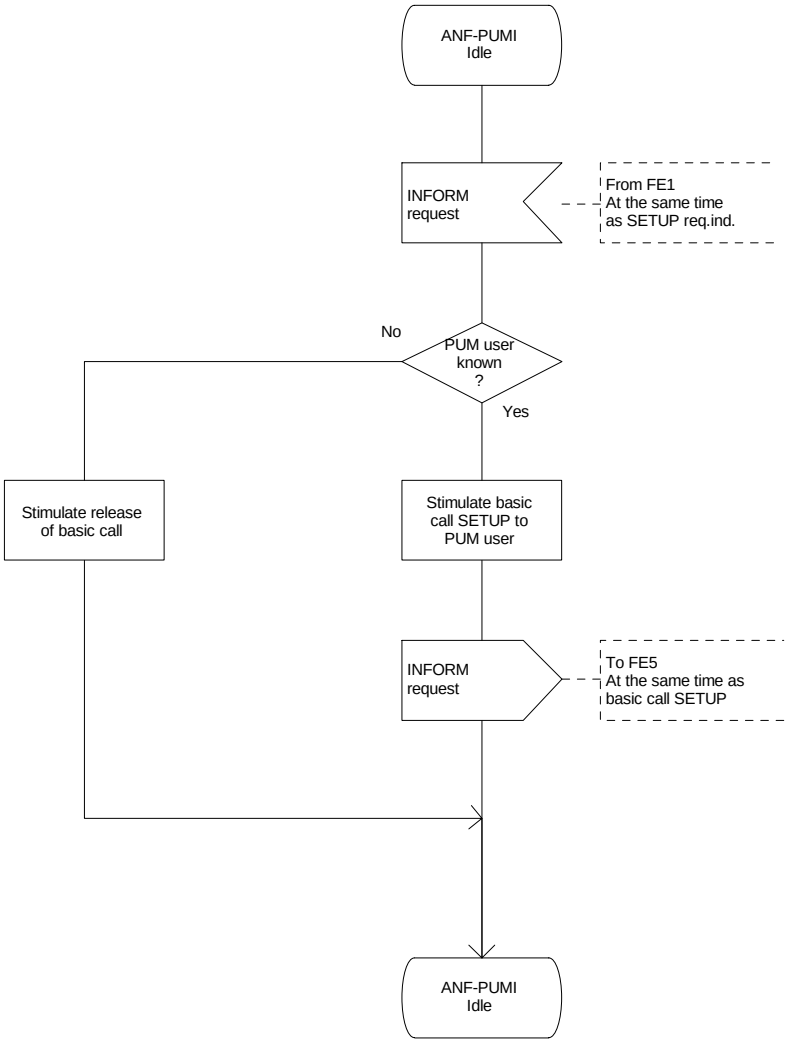

Figure 13 — ANF-PUMI, SDL for FE4

© ISO/IEC 2000 – All rights reserved
Copyright International Organization for Standardization
Provided by IHS under license with ISO
No reproduction or networking permitted without license from IHS
Not for Resale

8.4.5 Behaviour of FE5

Figure 14 shows the normal behaviour of FE5.

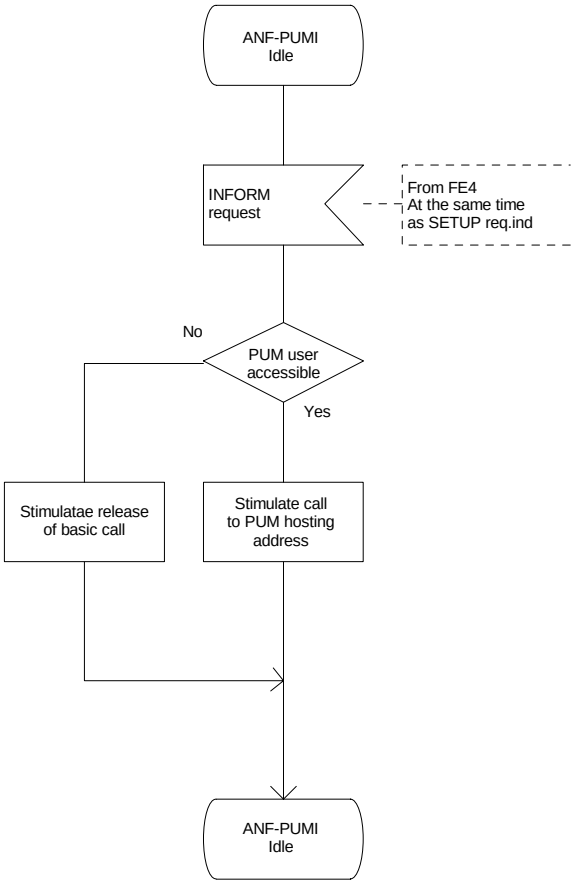

Figure 14 — ANF-PUMI, SDL for FE5

© ISO/IEC 2000 – All rights reserved

Copyright International Organization for Standardization
Provided by IHS under license with ISO
No reproduction or networking permitted without license from IHS
Not for Resale

8.5 Allocation of Functional Entities to physical equipment

Table 6 shows the allocation of Functional Entities to physical equipment.

Within the context of this table:

— the Originating PINX is the PINX to which the calling user is attached or the PINX at which a call from another network arrives in the PISN (incoming gateway PINX);

— the Terminating PINX is the PINX at which the hosting address is located;

— a Transit PINX is any other PINX through which the call passes.

In this table the Visitor PINX shall be the Terminating PINX.

Table 6 — Scenarios for the allocation of FEs to physical equipment

Scenario	FE1	FE2	FE3	FE4	FE5
1	Originating PINX	Home PINX	Home PINX	Visitor PINX	Terminating PINX
2	Originating PINX	Home PINX	Home PINX	Visitor PINX	TE
3	Originating PINX	Transit PINX	Home PINX	Visitor PINX	Terminating PINX
4	Originating PINX	Transit PINX	Home PINX	Visitor PINX	TE
5	Originating PINX	Originating PINX	Home PINX	Visitor PINX	Terminating PINX
6	Originating PINX	Originating PINX	Home PINX	Visitor PINX	TE
7	Home PINX	Home PINX	Home PINX	Visitor PINX	Terminating PINX
8	Home PINX	Home PINX	Home PINX	Visitor PINX	TE
9 (NOTE 18)	Transit PINX	Transit PINX	Home PINX	Visitor PINX	Terminating PINX
10 (NOTE 18)	Transit PINX	Transit PINX	Home PINX	Visitor PINX	TE

NOTE 18 - In scenarios where FE1 and FE2 are both allocated to a Transit PINX, this shall be the same Transit PINX.

8.6 Interworking considerations

Not applicable.

9 ANF-PUMO stage 2 specification

9.1 Functional model

9.1.1 Functional model description

The functional model shall comprise the following Functional Entities (FE):

FE1 PUM outgoing call detection and control entity;

FE2 Home location PUM call control entity.

The following functional relationships shall exist between these FEs:

ra between FE1 and FE2.

© ISO/IEC 2000 – All rights reserved
Copyright International Organization for Standardization
Provided by IHS under license with ISO
No reproduction or networking permitted without license from IHS
Not for Resale

Figure 15 shows these FEs and relationships.

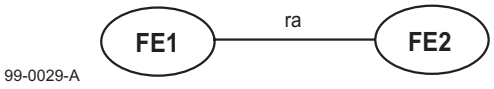

Figure 15 — Functional model for ANF-PUMO

9.1.2 Description of Functional Entities

9.1.2.1 PUM outgoing call detection and control entity, FE1

This FE controls the actions of ANF-PUMO and interacts with outgoing call control. If required, it will use the originating number (i.e., the PUM user's PISN number) to redirect the call to the home location for processing.

9.1.2.2 Home location PUM call control entity, FE2

This FE receives a PUM call for further processing when it is redirected by FE1 to the home PINX of the PUM user.

9.1.3 Relationship of functional model to basic call functional model

FE1 shall be collocated with the Originating CC.

FE2 shall be collocated with the CC representing the PUM user's home PINX.

An example of a relationship between the FEs for ANF-PUMO and the FEs for the basic call is shown in figure 16.

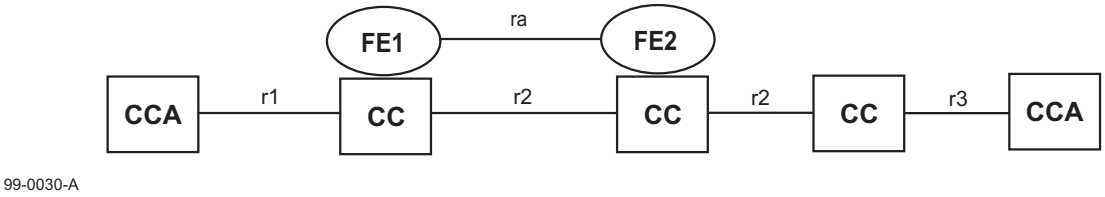

Figure 16 — Example relationship between the model for ANF-PUMO and basic call

9.2 Information flows

9.2.1 Definition of information flows

In the tables listing the service elements in information flows, the column headed "Request" indicates which of these elements are mandatory (M) and which are optional (O) in a request/indication information flow.

9.2.1.1 Relationship ra

9.2.1.1.1 INFORM1

INFORM1 is an unconfirmed information flow that shall be sent across relationship ra from FE1 to FE2 if the call is redirected to the home location for remote processing. Table 7 lists the elements within the INFORM1 information flow.

Table 7 — Content of INFORM1

Service element	Allowed value	Request
Original destination number		O (NOTE 19)
Sending complete indicator		O
PUM user identity	PISN number or alternative identifier	O (NOTE 20)

NOTE 19 - In the case that en-bloc basic call procedures apply, this element shall contain the complete destination number.

In the case of overlap sending, this element may contain the digits of the destination number so far available. The remaining part of the destination number will be sent by repeating the INFORM1 flow.

NOTE 20 - Shall be included if not a PISN number, otherwise optional.

© ISO/IEC 2000 – All rights reserved

Copyright International Organization for Standardization
Provided by IHS under license with ISO
No reproduction or networking permitted without license from IHS
Not for Resale

9.2.2 Relationship of information flows to basic call information flows

Table 8 summarises the relationships of the ANF-PUMO information flows with those of the basic call.

Table 8 — Relationship of the ANF-PUMO information flows with the basic call

Information flow			Independent of basic call flow	With basic call flow	Basic call flows
ra	INFORM1	request	yes	yes	r2_SETUP req/ind

9.2.3 Information flow sequences

A stage 3 standard for ANF-PUMO shall provide signalling procedures in support of the information flow sequences specified below. In addition, signalling procedures should be provided to cover other sequences arising from error situations, interactions with basic call, interactions with other supplementary services, different topologies, etc.

In the figures, ANF-PUMO information flows are represented by solid arrows and basic call information flows are represented by broken arrows. An ellipse embracing two information flows indicates that the two information flows occur simultaneously. Within a column representing a ANF-PUMO functional entity, the numbers refer to functional entity actions listed in 9.3

The following abbreviations are used:

req request;

ind indication.

9.2.3.1 Normal operation, redirection to home location

Figure 17 shows the information flow sequence for a successful PUMO attempt with redirection to the home location.

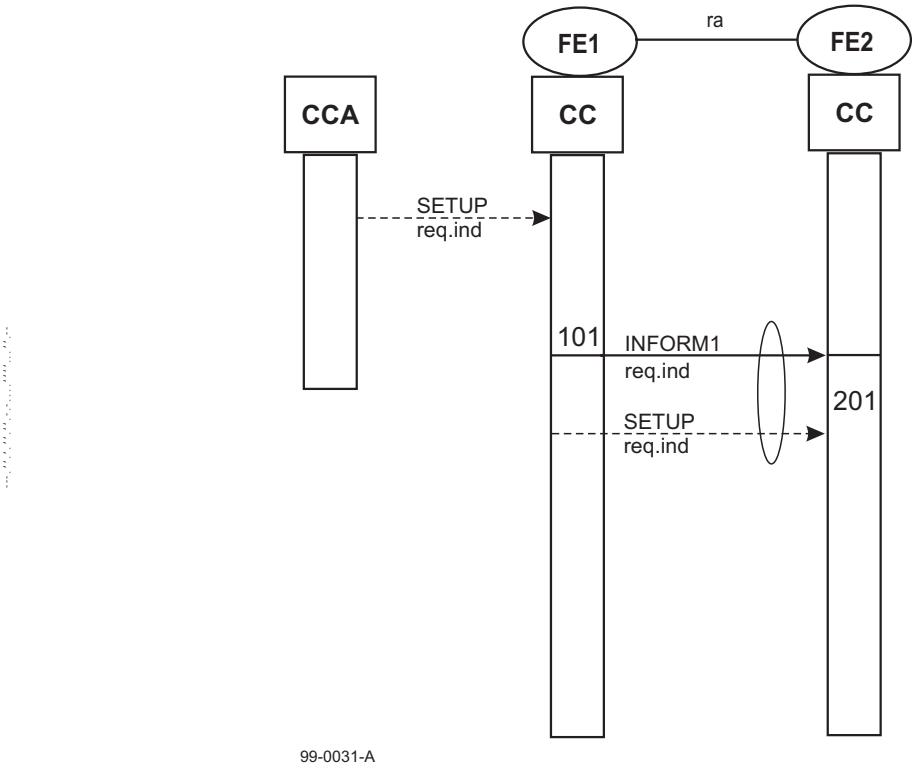

Figure 17 — Information flow sequence for ANF-PUMO - normal operation, redirection to home location

© ISO/IEC 2000 – All rights reserved
Copyright International Organization for Standardization
Provided by IHS under license with ISO
No reproduction or networking permitted without license from IHS
Not for Resale

9.3 Functional Entity actions

The following FE actions shall occur at the points indicated in the figures of 9.2.3.

9.3.1 Actions of FE1

101: The FE shall redirect the call to the home location (FE2), using the address of the home PINX as the destination number, and shall include an INFORM1 req/ind information flow, with (part of) the original destination number, if available.

9.3.2 Actions of FE2

201: The FE shall reinsert the original destination number, if contained in the INFORM1 req/ind information flow, and process the call, using normal outgoing call control procedures.

9.4 Functional entity behaviour

The FE behaviours shown below are intended to illustrate typical FE behaviour in terms of information flows sent and received.

The behaviour of each FE is shown using the Specification and Description Language (SDL) defined in ITU-T Rec. Z.100 (1993). Each input and output symbol is labelled to show the source FE of input signals or the destination FE of output signals.

9.4.1 Behaviour of FE1

Figure 18 shows the normal behaviour of FE1.

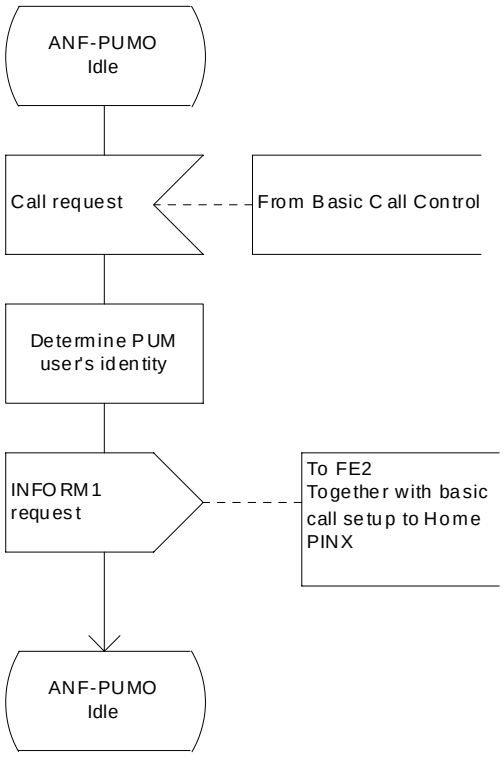

Figure 18 — ANF-PUMO, SDL for FE1

--`,,```,,,,````-`-`,,`,,`,`,,`---

© ISO/IEC 2000 – All rights reserved

Copyright International Organization for Standardization
Provided by IHS under license with ISO
No reproduction or networking permitted without license from IHS
Not for Resale

9.4.2 Behaviour of FE2

Figure 19 shows the normal behaviour of FE2.

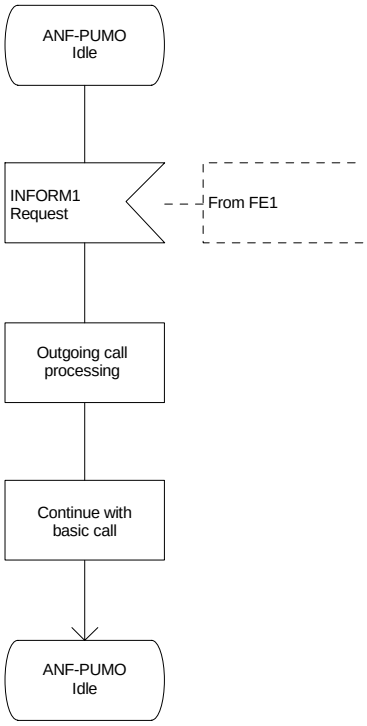

Figure 19 — ANF-PUMO, SDL for FE2

9.5 Allocation of Functional Entities to physical equipment

Table 9 shows the allocation of Functional Entities to physical equipment.

Within the context of this table the Originating PINX is the PINX to which the hosting terminal is attached.

Table 9 — Scenarios for the allocation of FEs to physical equipment

Scenario	FE1	FE2
1	Originating PINX	Home PINX

In this table the Visitor PINX shall be the Originating PINX.

9.6 Interworking considerations

Not applicable.

© ISO/IEC 2000 – All rights reserved
Copyright International Organization for Standardization
Provided by IHS under license with ISO
No reproduction or networking permitted without license from IHS
Not for Resale

ICS 33.040.35

Price based on 30 pages

© ISO/IEC 2000 – All rights reserved

Copyright International Organization for Standardization
Provided by IHS under license with ISO
No reproduction or networking permitted without license from IHS

Not for Resale