INTERNATIONAL STANDARD

ISO/IEC 17875

First edition
2000-04-15

Information technology — Telecommunications and information exchange between systems — Private Integrated Services Network — Specification, functional model and information flows — Private User Mobility (PUM) — Registration supplementary service

Technologies de l'information — Télécommunications et échange d'information entre systèmes — Réseau privé à intégration de services — Spécification, modèle fonctionnel et flux d'informations — Mobilité de l'usager privé (PUM) — Service supplémentaire d'enregistrement

Reference number
ISO/IEC 17875:2000(E)

© ISO/IEC 2000

Copyright International Organization for Standardization
Provided by IHS under license with ISO
No reproduction or networking permitted without license from IHS

Not for Resale

PDF disclaimer

This PDF file may contain embedded typefaces. In accordance with Adobe's licensing policy, this file may be printed or viewed but shall not be edited unless the typefaces which are embedded are licensed to and installed on the computer performing the editing. In downloading this file, parties accept therein the responsibility of not infringing Adobe's licensing policy. The ISO Central Secretariat accepts no liability in this area.

Adobe is a trademark of Adobe Systems Incorporated.

Details of the software products used to create this PDF file can be found in the General Info relative to the file; the PDF-creation parameters were optimized for printing. Every care has been taken to ensure that the file is suitable for use by ISO member bodies. In the unlikely event that a problem relating to it is found, please inform the Central Secretariat at the address given below.

© ISO/IEC 2000

All rights reserved. Unless otherwise specified, no part of this publication may be reproduced or utilized in any form or by any means, electronic or mechanical, including photocopying and microfilm, without permission in writing from either ISO at the address below or ISO's member body in the country of the requester.

ISO copyright office
Case postale 56 • CH-1211 Geneva 20
Tel. + 41 22 749 01 11
Fax + 41 22 734 10 79
E-mail copyright@iso.ch
Web www.iso.ch

Printed in Switzerland

Copyright International Organization for Standardization
Provided by IHS under license with ISO
No reproduction or networking permitted without license from IHS

© ISO/IEC 2000 – All rights reserved

Not for Resale

Contents

Foreword		**v**
Introduction		**vi**
1	Scope	**1**
2	Conformance	**1**
3	Normative references	**1**
4	Definitions	**2**
4.1	External definitions	**2**
4.2	AllCall registration	**3**
4.3	Additional network feature (ANF)	**3**
4.4	Alternative identifier	**3**
4.5	Destination number	**3**
4.6	Home Data Base (HDB)	**3**
4.7	Home PINX	**3**
4.8	Hosting address	**3**
4.9	InCall registration	**3**
4.10	Incoming PUM call	**3**
4.11	Originating number	**3**
4.12	OutCall registration	**3**
4.13	Outgoing PUM call	**3**
4.14	PUM user identity	**3**
4.15	Private User Mobility (PUM)	**3**
4.16	(PUM) de-registration	**3**
4.17	PUM registration	**3**
4.18	PUM number	**3**
4.19	PUM user	**3**
4.20	Registration session	**3**
4.21	Visitor area	**3**
4.22	Visitor Data Base (VDB)	**3**
4.23	Visitor PINX	**3**
5	List of acronyms	**3**
6	SS-PUMR stage 1 specification	**5**
6.1	Description	**5**
6.1.1	General description	**5**
6.1.2	Qualifications on applicability to telecommunication services	**5**
6.2	Procedure	**5**
6.2.1	Provision/withdrawal	**5**
6.2.2	Normal procedures	**6**
6.2.3	Exceptional procedures	**7**
6.3	Interaction with other supplementary services and ANFs	**7**
6.3.1	Number identification services (SS-CLIP, SS-COLP, SS-CLIR)	**7**
6.3.2	Calling Name Identification Presentation (SS-CNIP)	**7**
6.3.3	Connected Name Identification Presentation (SS-CONP)	**7**
6.3.4	Calling/Connected Name Identification Restriction (SS-CNIR)	**7**
6.3.5	Call Completion to Busy Subscriber (SS-CCBS)	**8**
6.3.6	Call Completion on No Reply (SS-CCNR)	**8**
6.3.7	Call Transfer (SS-CT)	**8**
6.3.8	Call Forwarding Unconditional (SS-CFU)	**8**
6.3.9	Call Forwarding Busy (SS-CFB)	**8**

© ISO/IEC 2000 – All rights reserved

Copyright International Organization for Standardization
Provided by IHS under license with ISO
No reproduction or networking permitted without license from IHS
Not for Resale

6.3.10 Call Forwarding No Reply (SS-CFNR) **8**
6.3.11 Call Deflection (SS-CD) **8**
6.3.12 Path Replacement (ANF-PR) **8**
6.3.13 Call Offer (SS-CO) **8**
6.3.14 Call Intrusion (SS-CI) **8**
6.3.15 Do not Disturb (SS-DND) **8**
6.3.16 Do not Disturb Override (SS-DNDO) **8**
6.3.17 Advice of Charge (SS-AOC) **8**
6.3.18 Recall (SS-RE) **8**
6.3.19 Call Interception (ANF-CINT) **8**
6.3.20 Transit Counter (ANF-TC) **8**
6.3.21 Route Restriction Class (ANF-RRC) **8**
6.3.22 Message Waiting Indication (SS-MWI) **8**
6.3.23 Wireless Terminal Location Registration (SS-WTLR) **8**
6.3.24 Wireless Terminal Incoming Call (ANF-WTMI) **9**
6.3.25 Wireless Terminal Outgoing Call (ANF-WTMO) **9**
6.3.26 Wireless Terminal Authentication of a WTM User (SS-WTAT) **9**
6.3.27 Wireless Terminal Authentication of the PISN (SS-WTAN) **9**
6.3.28 Private User Mobility Incoming Call (ANF-PUMI) **9**
6.3.29 Private User Mobility Outgoing Call (ANF-PUMO) **9**
6.3.30 Common Information (ANF-CMN) **9**
6.3.31 Call Priority Interruption (Protection) (SS-CPI(P)) **9**

6.4 Interworking considerations **9**
6.5 Overall SDL **10**

7 SS-PUMR stage 2 specification **10**

7.1 Functional model **10**

7.1.1 Functional model description **10**
7.1.2 Description of Functional Entities **11**
7.1.3 Relationship of functional model to basic call functional model **12**

7.2 Information flows **12**

7.2.1 Definition of information flows **12**
7.2.2 Relationship of information flows to basic call information flows **18**
7.2.3 Information flow sequences **18**

7.3 Functional Entity actions **24**

7.3.1 Actions of FE1 **24**
7.3.2 Actions of FE2 **25**
7.3.3 Actions of FE3 **25**
7.3.4 Actions of FE4 **25**
7.3.5 Actions of FE5 **25**
7.3.6 Actions of FE6 **26**
7.3.7 Actions of FE7 **26**
7.3.8 Actions of FE8 **26**

7.4 Functional entity behaviour **27**

7.4.1 Behaviour of FE1 **27**
7.4.2 Behaviour of FE2 **29**
7.4.3 Behaviour of FE3 **32**
7.4.4 Behaviour of FE4 **33**
7.4.5 Behaviour of FE5 **37**
7.4.6 Behaviour of FE6 **40**
7.4.7 Behaviour of FE7 **41**
7.4.8 Behaviour of FE8 **42**

7.5 Allocation of Functional Entities to physical equipment **43**
7.6 Interworking considerations **43**

--`,,```,,,,````-`-`,,`,,`,`,,`---

© ISO/IEC 2000 – All rights reserved
Copyright International Organization for Standardization
Provided by IHS under license with ISO
No reproduction or networking permitted without license from IHS
Not for Resale

Foreword

ISO (the International Organization for Standardization) and IEC (the International Electrotechnical Commission) form the specialized system for worldwide standardization. National bodies that are members of ISO or IEC participate in the development of International Standards through technical committees established by the respective organization to deal with particular fields of technical activity. ISO and IEC technical committees collaborate in fields of mutual interest. Other international organizations, governmental and non-governmental, in liaison with ISO and IEC, also take part in the work.

International Standards are drafted in accordance with the rules given in the ISO/IEC Directives, Part 3.

In the field of information technology, ISO and IEC have established a joint technical committee, ISO/IEC JTC 1. Draft International Standards adopted by the joint technical committee are circulated to national bodies for voting. Publication as an International Standard requires approval by at least 75 % of the national bodies casting a vote.

Attention is drawn to the possibility that some of the elements of this International Standard may be the subject of patent rights. ISO and IEC shall not be held responsible for identifying any or all such patent rights.

International Standard ISO/IEC 17875 was prepared by ECMA (as ECMA-281) and was adopted, under a special “fast-track procedure”, by Joint Technical Committee ISO/IEC JTC 1, *Information technology*, in parallel with its approval by national bodies of ISO and IEC.

--`,,```,,,,````-`-`,,`,,`,`,,`---

© ISO/IEC 2000 – All rights reserved

Copyright International Organization for Standardization
Provided by IHS under license with ISO
No reproduction or networking permitted without license from IHS
Not for Resale

Introduction

This International Standard is one of a series of standards defining services and signalling procedures applicable to Private Integrated Services Networks (PISNs). The series uses ISDN concepts as developed by ITU-T and conforms to the framework of International Standards for Open Systems Interconnection as defined by ISO/IEC.

This International Standard specifies the Private User Mobility Registration (PUMR) supplementary service.

This International Standard is based upon the practical experience of ECMA member companies and the results of their active and continuous participation in the work of ISO/IEC JTC1, ITU-T, ETSI and other international and national standardization bodies. It represents a pragmatic and widely based consensus.

There is currently no equivalent service specified by ITU-T or ETSI for public ISDN.

© ISO/IEC 2000 – All rights reserved
Copyright International Organization for Standardization
Provided by IHS under license with ISO
No reproduction or networking permitted without license from IHS
Not for Resale

Information technology — Telecommunications and information exchange between systems — Private Integrated Services Network — Specification, functional model and information flows — Private User Mobility (PUM) — Registration supplementary service

1 Scope

This International Standard specifies the Supplementary Service (SS) Private User Mobility Registration (PUMR), which is applicable to various basic services supported by Private Integrated Services Networks (PISN). Basic services are specified in ISO/IEC 11574.

SS-PUMR is a supplementary service that enables a PUM user to register at, or de-register from, any wired or wireless terminal within the PISN. The ability to register at different wired and wireless terminals in the PISN at different times enables the PUM user to maintain the provided services (including the ability to make and receive calls) at different access points.

Supplementary service specifications are produced in three stages, according to the method described in CCITT Rec. I.130. This International Standard contains the stage 1 and stage 2 specifications of SS-PUMR. The stage 1 specification (clause 6) specifies the general feature principles and capabilities. The stage 2 specification (clause 7) identifies the Functional Entities involved in the supplementary service and the information flows between them.

2 Conformance

In order to conform to this International Standard, a stage 3 standard shall specify signalling protocols and equipment behaviour that are capable of being used in a PISN which supports the supplementary service specified in this International Standard. This means that, to claim conformance, a stage 3 standard is required to be adequate for the support of those aspects of clause 6 (stage 1) and clause 7 (stage 2) which are relevant to the interface or equipment to which the stage 3 standard applies.

3 Normative references

The following standards contain provisions which, through reference in this text, constitute provisions of this International Standard. At the time of publication, the editions indicated were valid. All standards are subject to revision, and parties to agreements based on this International Standard are encouraged to investigate the possibility of applying the most recent editions of the standards indicated below. Members of IEC and ISO maintain registers of currently valid International Standards.

ISO/IEC 11571:1998, *Information technology — Telecommunications and information exchange between systems — Private Integrated Services Network — Addressing.*

ISO/IEC 11574:1994, *Information technology — Telecommunications and information exchange between systems — Private Integrated Services Network — Circuit-mode 64 kbit/s bearer services — Service description, functional capabilities and information flows.*

ISO/IEC 11579-1:1994, *Information technology — Telecommunications and information exchange between systems — Private Integrated Services Network — Part 1: Reference configuration for PISN exchanges (PINX).*

ISO/IEC 13866:1995, *Information technology — Telecommunications and information exchange between systems — Private Integrated Services Network — Specification, functional model and information flows — Call completion supplementary services.*

ISO/IEC 15428:1999, *Information technology — Telecommunications and information exchange between systems — Private Integrated Services Network — Specification, functional model and information flows — Wireless Terminal Location Registration supplementary service and Wireless Terminal Information Exchange additional network feature.*

ISO/IEC 15430:1999, *Information technology — Telecommunications and information exchange between systems — Private Integrated Services Network — Specification, functional model and information flows — Wireless terminal call handling additional network features.*

© ISO/IEC 2000 — All rights reserved

Copyright International Organization for Standardization
Provided by IHS under license with ISO
No reproduction or networking permitted without license from IHS
Not for Resale

ISO/IEC 15432:1999, *Information technology — Telecommunications and information exchange between systems — Private Integrated Services Network — Specification, functional model and information flows — Wireless Terminal Authentication supplementary services (WTAT and WTAN).*

ISO/IEC 17877:2000, *Information technology — Telecommunications and information exchange between systems — Private Integrated Services Network — Specification, functional model and information flows — Private User Mobility (PUM) — Call handling additional network features.*

CCITT Rec. I.130,1988, *Method for the characterization of telecommunication services supported by an ISDN and network capabilities of an ISDN (Blue Book).*

ITU-T Rec. I.112:1993, *Vocabulary of terms for ISDNs.*

ITU-T Rec. I.210:1993, *Principles of telecommunication services supported by an ISDN and the means to describe them.*

ITU-T Rec. Z.100:1993, *Specification and description language.*

4 Definitions

For the purposes of this International Standard the following definitions apply.

4.1 External definitions

This International Standard uses the following terms defined in other documents:

— Basic service (ITU-T Rec. I.210)

— Call (Basic call) (ISO/IEC 11574)

— PISN Number (ISO/IEC 11571)

— Private Integrated Services Network (PISN) (ISO/IEC 11579-1)

— Private Integrated Services Network Exchange (PINX) (ISO/IEC 11579-1)

— Service (ITU-T Rec. I.112)

— Signalling (ITU-T Rec. I.112)

— Supplementary Service (ITU-T Rec. I.210)

— User (ISO/IEC 11574)

This International Standard refers to the following basic call Functional Entities (FE) defined in ISO/IEC 11574:

— Call Control (CC)

— Call Control Agent (CCA)

This International Standard refers to the following basic call inter-FE relationships defined in ISO/IEC 11574:

— r1

— r2

— r3

This International Standard refers to the following basic call information flows defined in ISO/IEC 11574:

— SETUP request/indication

— SETUP response/confirm

— RELEASE request/indication

This International Standard refers to the following service elements defined for basic call control in ISO/IEC 11574:

— Call History

— Connection Type

— Destination Number

— Destination Subaddress

© ISO/IEC 2000 – All rights reserved
Copyright International Organization for Standardization
Provided by IHS under license with ISO
No reproduction or networking permitted without license from IHS
Not for Resale

— Originating Category

— Originating Number

— Originating Subaddress

4.2 AllCall registration : PUM registration for both incoming and outgoing calls. These two components are combined into a single service option, and cannot be separated.

4.3 Additional network feature (ANF) : A capability provided by a PISN, not generally directly to a User, over and above that of the Basic call.

4.4 Alternative identifier : An identifier, other than the PISN number, which identifies the PUM user uniquely.

4.5 Destination number : The PISN number of the original called user.

4.6 Home Data Base (HDB) : The database in which the data on the current location and associated parameters of a wireless terminal or a mobile user are stored.

4.7 Home PINX : The PINX that has direct access to the HDB entry for a particular PUM user.

4.8 Hosting address : The complete PISN number of the entity within the network to which incoming calls for the PUM user are directed by the Home PINX (i.e., the address where a PUM user is currently registered).

4.9 InCall registration : PUM registration for incoming calls.

4.10 Incoming PUM call : A call where the called user is a PUM user.

4.11 Originating number : The PISN number of the user initiating a call.

4.12 OutCall registration : PUM registration for outgoing calls.

4.13 Outgoing PUM call : A call originated by a PUM user.

4.14 PUM user identity : A PUM number or alternative identifier used to uniquely identify the PUM user.

4.15 Private User Mobility (PUM) : The capability of a PISN user to register at any PISN terminal, and so receive the PISN services at the hosting terminal.

4.16 (PUM) de-registration : The process whereby a PUM registration is cancelled.

4.17 PUM registration : The operation performed by a PUM user to inform the PISN of the PISN address that should be used for locating the user.

4.18 PUM number : A number which uniquely identifies a PUM user. This is the number used by the caller to reach the PUM user.

4.19 PUM user : For the purpose of this International Standard, a PUM user is defined as the user of the SS-PUMR supplementary service.

4.20 Registration session : The period following registration at a hosting address that the PUM user is registered to make calls, receive calls, or make and receive calls.

4.21 Visitor area : The coverage area of a visitor data base.

4.22 Visitor Data Base (VDB) : The database in which location information concerning a wireless terminal or a mobile user is stored, as long as the wireless terminal or the mobile user are localized in the corresponding visitor area.

4.23 Visitor PINX : The PINX that has direct access to the VDB currently associated with a particular PUM user.

5 List of acronyms

ANF	Additional Network Feature
AOC	Advice Of Charge
CC	Call Control (Functional Entity)
CCA	Call Control Agent (Functional Entity)
CCBS	Call Completion to Busy Subscriber
CCNR	Call Completion on No Reply

© ISO/IEC 2000 – All rights reserved

Copyright International Organization for Standardization
Provided by IHS under license with ISO
No reproduction or networking permitted without license from IHS
Not for Resale

CD	Call Deflection
CFB	Call Forwarding Busy
CFNR	Call Forwarding No Reply
CFU	Call Forwarding Unconditional
CI	Call Intrusion
CICL	Call Intrusion Capability Level
CINT	Call INTerception
CLIP	Calling Line Identification Presentation
CLIR	Calling/Connected Line Identification Restriction
CMN	CoMmoN Information
CNIP	Calling Name Identification Presentation
CNIR	Calling/Connected Name Identification Restriction
CO	Call Offer
COLP	Connected Line Identification Presentation
CONP	Connected Name Identification Presentation
CPI	Call Priority Interruption
CPICL	Call Priority Interruption Capability Level
CPIP	Call Priority Interruption Protection
CPIPL	Call Priority Interruption Protection Level
CT	Call Transfer
DND	Do Not Disturb
DNDO	Do Not Disturb Override
FE	Functional Entity
FEA	Functional Entity Action
HDB	Home Data Base
ISDN	Integrated Services Digital Network
MWI	Message Waiting Indication
PIN	Personal Identification Number
PINX	Private Integrated Services Network Exchange
PISN	Private Integrated Services Network
PR	Path Replacement
PUM	Private User Mobility
PUMI	PUM Incoming Call Handling
PUMO	PUM Outgoing Call Handling
PUMR	Private User Mobility Registration
RE	REcall
SDL	Specification and Description Language
SS	Supplementary Service
TC	Transit Counter

--`,,```,,,,````-`-`,,`,,`,`,,`---

© ISO/IEC 2000 – All rights reserved

Copyright International Organization for Standardization
Provided by IHS under license with ISO
No reproduction or networking permitted without license from IHS

Not for Resale

TE	Terminal Equipment
VDB	Visitor Data Base
WT	Wireless Terminal
WTAU	Wireless Terminal AUthentication
WTLR	Wireless Terminal Location Registration
WTM	Wireless Terminal Mobility
WTM	Wireless Terminal Mobility
WTMI	Wireless Terminal Mobility Incoming call
WTMO	Wireless Terminal Mobility Outgoing call

6 SS-PUMR stage 1 specification

6.1 Description

6.1.1 General description

PUM Registration (PUMR) identifies to the PISN the address at which a PUM user will subsequently make calls, receive calls or make and receive calls.

A request to register a PUM user at an address can be rejected.

SS-PUMR also allows a PUM user to indicate to the PISN that the existing registration at the hosting address is to be terminated (de-registration).

6.1.2 Qualifications on applicability to telecommunication services

SS-PUMR is applicable to all basic services defined in ISO/IEC 11574.

6.2 Procedure

6.2.1 Provision/withdrawal

SS-PUMR shall be provided and withdrawn by arrangement with the PISN authority on a per PISN number basis. This service may be provided separately for each basic service subscribed to.

The mandatory and optional PUMR service options in a PISN are specified in table 1.

Table 1 — Service options for PUM registration

Service option	Status
Registration for incoming calls (InCall registration)	Mandatory
Registration for outgoing calls (OutCall registration)	Optional
Registration for both incoming and outgoing calls (AllCall registration)	Optional

For each of the service options listed in table 1, at least the parameter(s) specified in table 2 shall be supported.

Table 2 — Parameters for the service options

Service option	Parameter(s)
InCall registration	Maximum duration of each InCall registration session
OutCall registration	Maximum duration of each OutCall registration session, or maximum number of outgoing calls per OutCall registration session
AllCall registration	Maximum duration of each AllCall registration session

© ISO/IEC 2000 – All rights reserved

Copyright International Organization for Standardization
Provided by IHS under license with ISO
No reproduction or networking permitted without license from IHS
Not for Resale

In a PISN where the PUM user is not required to specify a service option parameter, the session may continue indefinitely until it is either terminated by the PISN or a PISN user.

6.2.2 Normal procedures

6.2.2.1 Activation, deactivation and interrogation

SS-PUMR shall be activated on provision and deactivated on withdrawal on a per PISN number basis.

The PUMR service may provide the PUM user with the ability to obtain information on the current registration sessions (interrogation). If interrogation is supported, it shall be possible to obtain the addresses of all current registration sessions, optionally requested on a per service option basis. Furthermore, the PUM user may be provided with the ability to request the following items of information for a specified registration session:

— Type of the registration session (InCall, OutCall, or AllCall);

— Time left in the registration session (if applicable);

— Number of outgoing calls left in the registration session (if applicable).

6.2.2.2 Invocation and operation

SS-PUMR shall be invoked to register the PUM user at a specified address. If, at the time of invocation, more than one of the options listed in table 1 are available, the PUM user shall indicate which option to select.

Upon successful completion of SS-PUMR, an indication of successful completion shall be sent to the PUM user.

6.2.2.2.1 Registration for incoming calls (InCall registration)

The PUM user may specify the duration of the InCall registration session.

A PISN may support InCall registration sessions for one or more PUM users concurrently at the same hosting address.

Upon successful completion of an InCall registration, the PISN shall terminate the PUM user's previous InCall registration session (if applicable). Similarly, upon successful completion of an InCall registration, the PISN shall terminate the PUM user's previous AllCall registration session (if applicable).

The invocation of an InCall registration may leave the PUM user's existing OutCall registration session (if applicable) unaffected.

6.2.2.2.2 Registration for outgoing calls (OutCall registration)

The PUM user may specify the number of outgoing calls or the duration of the OutCall registration session.

A PISN may support OutCall registration sessions for one or more PUM users concurrently at the same hosting address.

Upon successful completion of an OutCall registration, the PISN may leave the PUM user's existing OutCall, InCall, and AllCall registration sessions (if applicable) unaffected.

6.2.2.2.3 Registration for both incoming and outgoing calls (AllCall registration)

The PUM user may specify the duration of the AllCall session.

A PISN may support AllCall registration sessions for one or more PUM users concurrently at the same hosting address.

Upon successful completion of an AllCall registration, the PISN shall terminate the PUM user's previous AllCall registration session (if applicable). Similarly, upon successful completion of an AllCall registration, the PISN shall terminate the PUM user's previous InCall registration session (if applicable).

The invocation of an AllCall registration may leave the PUM user's existing OutCall registration session (if applicable) unaffected.

6.2.2.2.4 Local and remote registration

It shall be possible to invoke SS-PUMR from the hosting address (local registration). Additionally, as an implementation option, a PISN may allow SS-PUMR to be invoked from a PISN address other than the hosting address (remote registration).

6.2.2.2.5 PUM de-registration

SS-PUMR may be invoked to de-register a PUM user from the current hosting address. The following PUM de-registration mechanisms are specified:

© ISO/IEC 2000 – All rights reserved
Copyright International Organization for Standardization
Provided by IHS under license with ISO
No reproduction or networking permitted without license from IHS
Not for Resale

a) Explicit de-registration: The PUM user shall be able to de-register from the hosting address by means of a manual operation carried out on the hosting address. As an implementation option, the PUM user may be permitted to specify that the de-registration is to apply to:

   — a specified remote hosting address;

   — a specified type of registration session; or

   — all registration sessions regardless of hosting address or type.

b) Conditional de-registration: If finite values for the parameters listed in table 2 are supported, the PISN shall de-register the PUM user when a specified criterion is met.

c) Forced de-registration: As an implementation option, an authorized user may be permitted to de-register a visiting PUM user by means of a manual operation carried out on the hosting address.

Upon successful completion of the de-registration process, the PUM de-registration may be confirmed to the PUM user.

NOTE 1 - During a period when a PUM user is not registered at any address, the PISN can assign a default address for incoming and / or outgoing calls. Alternatively, incoming PUM calls can receive implementation-specific processing (e.g., a voice announcement).

6.2.2.2.6 Identification

As part of the registration and explicit de-registration procedures, the PUM user shall provide identification which may be either the PUM number or an alternative unique identifier.

6.2.2.2.7 Authentication

As part of the registration and explicit de-registration procedures, the PUM user may be required to provide a PIN for authentication.

NOTE 2 - More complex authentication procedures can be used, but such procedures are outside the scope of this International Standard.

6.2.3 Exceptional procedures

6.2.3.1 Activation, deactivation, and interrogation

Not applicable.

6.2.3.2 Invocation and operation

The invocation of SS-PUMR shall be rejected under at least the following circumstances:

— PUM user identity not known;

— PUM user not permitted to register on the specified address;

— PUM user not subscribed to the specified option or parameter;

— PUM user failed authentication;

— PUM registration temporarily not possible.

An indication of the reason for rejection shall be sent to the PUM user.

PUM de-registration shall be rejected if the PUM user is not registered at the specified address.

6.3 Interaction with other supplementary services and ANFs

Interactions with other supplementary services and ANFs for which PISN standards were available at the time of publication of this International Standard are specified below.

6.3.1 Number identification services (SS-CLIP, SS-COLP, SS-CLIR)

No interaction.

6.3.2 Calling Name Identification Presentation (SS-CNIP)

No Interaction.

6.3.3 Connected Name Identification Presentation (SS-CONP)

No interaction.

6.3.4 Calling/Connected Name Identification Restriction (SS-CNIR)

No interaction.

© ISO/IEC 2000 – All rights reserved

Copyright International Organization for Standardization
Provided by IHS under license with ISO
No reproduction or networking permitted without license from IHS
Not for Resale

6.3.5 Call Completion to Busy Subscriber (SS-CCBS)

If the PUM user is either the served (calling) user or the called user in a call completion attempt, the invocation of SS-PUMR may cause call completion to be cancelled.

6.3.6 Call Completion on No Reply (SS-CCNR)

If the PUM user is either the served (calling) user or the called user in a call completion attempt, the invocation of SS-PUMR may cause call completion to be cancelled.

6.3.7 Call Transfer (SS-CT)

No interaction.

6.3.8 Call Forwarding Unconditional (SS-CFU)

No interaction.

6.3.9 Call Forwarding Busy (SS-CFB)

No interaction.

6.3.10 Call Forwarding No Reply (SS-CFNR)

No interaction.

6.3.11 Call Deflection (SS-CD)

No interaction.

6.3.12 Path Replacement (ANF-PR)

No interaction.

6.3.13 Call Offer (SS-CO)

No interaction.

6.3.14 Call Intrusion (SS-CI)

No interaction.

6.3.15 Do not Disturb (SS-DND)

No interaction.

6.3.16 Do not Disturb Override (SS-DNDO)

No interaction.

6.3.17 Advice of Charge (SS-AOC)

No interaction.

6.3.18 Recall (SS-RE)

No interaction.

6.3.19 Call Interception (ANF-CINT)

No interaction.

6.3.20 Transit Counter (ANF-TC)

No interaction.

6.3.21 Route Restriction Class (ANF-RRC)

No interaction.

6.3.22 Message Waiting Indication (SS-MWI)

No interaction.

6.3.23 Wireless Terminal Location Registration (SS-WTLR)

The invocation of SS-PUMR may be rejected if attempted between the invocation and completion of the SS-WTLR procedures.

The invocation of SS-WTLR shall not cause a PUM registration which may exist on the relevant WT to be cancelled.

© ISO/IEC 2000 – All rights reserved
Copyright International Organization for Standardization
Provided by IHS under license with ISO
No reproduction or networking permitted without license from IHS
Not for Resale

6.3.24 Wireless Terminal Incoming Call (ANF-WTMI)

An incoming call to a wireless terminal may be rejected if it occurs between the invocation and completion of the SS-PUMR procedures on that terminal.

6.3.25 Wireless Terminal Outgoing Call (ANF-WTMO)

No interaction.

6.3.26 Wireless Terminal Authentication of a WTM User (SS-WTAT)

The invocation of SS-PUMR may be rejected if attempted between the invocation and completion of the SS-WTAT procedures.

6.3.27 Wireless Terminal Authentication of the PISN (SS-WTAN)

The invocation of SS-PUMR may be rejected if attempted between the invocation and completion of the SS-WTAN procedures.

6.3.28 Private User Mobility Incoming Call (ANF-PUMI)

An incoming call to a PUM user may be rejected if it occurs between the invocation and completion of the SS-PUMR procedures or if the incoming call occurs during a period of de-registration.

6.3.29 Private User Mobility Outgoing Call (ANF-PUMO)

No interaction.

6.3.30 Common Information (ANF-CMN)

No interaction.

6.3.31 Call Priority Interruption (Protection) (SS-CPI(P))

No interaction.

6.4 Interworking considerations

Not applicable.

© ISO/IEC 2000 – All rights reserved

Copyright International Organization for Standardization
Provided by IHS under license with ISO
No reproduction or networking permitted without license from IHS
Not for Resale

6.5 Overall SDL

Figure 1 contains the dynamic description of SS-PUMR using the Specification and Description Language (SDL) defined in ITU-T Rec. Z.100 (1993). The SDL process represents the behaviour of the PISN in providing SS-PUMR.

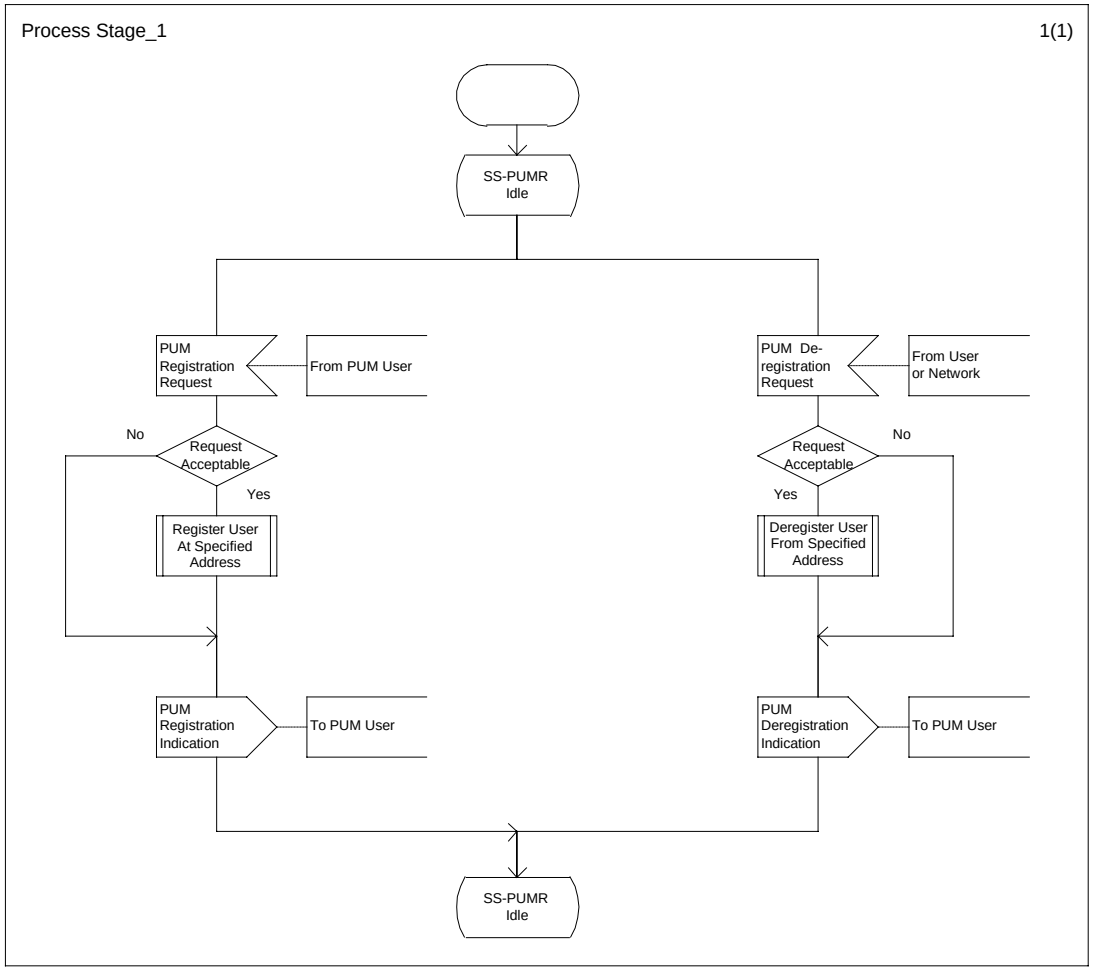

Figure 1 — SS-PUMR, overall SDL

7 SS-PUMR stage 2 specification

7.1 Functional model

7.1.1 Functional model description

The functional model shall comprise the following Functional Entities (FE):

FE1 Service initiating control entity;

FE2 Service control entity;

FE3 PUM user's local service agent entity;

FE4 VDB function control entity;

FE5 HDB function control entity;

FE6 Old VDB function control entity;

FE7 PUM user's old local service agent entity;

FE8 Identification mapping entity.

© ISO/IEC 2000 – All rights reserved
Copyright International Organization for Standardization
Provided by IHS under license with ISO
No reproduction or networking permitted without license from IHS
Not for Resale

The following functional relationships shall exist between these FEs:

ra between FE1 and FE2;

rb between FE2 and FE4;

rc between FE3 and FE4;

rd between FE4 and FE5;

re between FE5 and FE6;

rf between FE6 and FE7;

rg between FE2 and FE8, and between FE4 and FE8;

rh between FE2 and FE5.

Figure 2 shows these FEs and relationships.

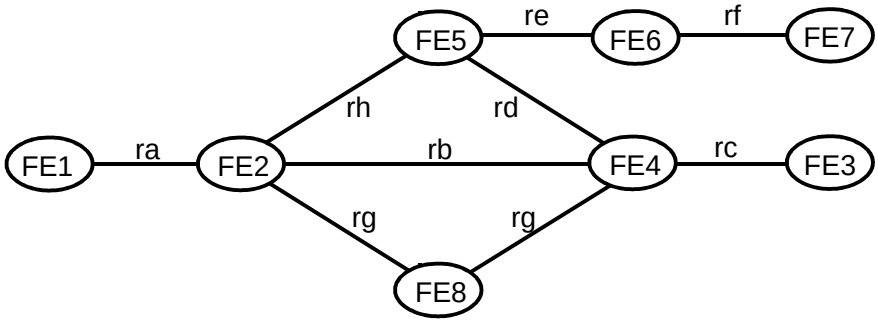

Figure 2 — Functional model for the registration procedures of a PUM user

7.1.2 Description of Functional Entities

7.1.2.1 Service initiating control entity, FE1

This FE initiates and forwards requests for PUM registration, de-registration and interrogation. A request can be initiated by a user or the PISN.

7.1.2.2 Service control entity, FE2

This FE forwards PUM registration, de-registration and interrogation requests and responses between FE1 and FE4, and between FE1 and FE5. FE2 also communicates with FE8 to have alternative identifiers translated into PUM numbers.

7.1.2.3 PUM user's local service agent entity, FE3

This FE serves the PUM user at the hosting address.

7.1.2.4 VDB function control entity, FE4

This FE is responsible for the maintenance of PUM location information while the PUM user is registered in the visitor area. It inserts an entry in the VDB when the PUM user registers in the visitor area, and deletes the entry when the PUM user's registration in the visitor area is cancelled. FE4 also communicates with FE8 to have alternative identifiers translated into PUM numbers.

FE4 communicates with FE5 to supply the interrogated registration session information.

7.1.2.5 HDB function control entity, FE5

This FE stores the new visitor area of the PUM user and requests the deletion of location information in the old visitor area (if applicable).

FE5 communicates with all FE4s to collect information about the registration sessions when interrogated by FE2.

7.1.2.6 Old VDB function control entity, FE6

This FE is the VDB function control in the previous visitor area and is responsible for the deletion of location information that is no longer required.

7.1.2.7 PUM user's old local service agent entity, FE7

This FE is the PUM user's service agent in the previous visitor area.

© ISO/IEC 2000 – All rights reserved

Copyright International Organization for Standardization
Provided by IHS under license with ISO
No reproduction or networking permitted without license from IHS
Not for Resale

7.1.2.8 Identification mapping entity, FE8

This FE converts an identity (alternative identifier) supplied by the PUM user to the PUM number.

7.1.3 Relationship of functional model to basic call functional model

The functional model for SS-PUMR is independent of the basic call functional model.

7.2 Information flows

7.2.1 Definition of information flows

In the tables listing the service elements in information flows, the column headed "Request" indicates which of these elements are mandatory (M) and which are optional (O) in a request/indication information flow, and the column headed "Confirm" (confirmed information flows only) indicates which of these elements are mandatory (M) and which are optional (O) in a response/confirmation information flow.

7.2.1.1 PUM-R

PUM-R is a confirmed information flow that is used to perform a PUM registration. PUM-R Requests are sent across relationship ra from FE1 to FE2, relayed by FE2 across relationship rb towards FE4 and then sent across relationship rd towards FE5. Table 3 lists the elements within the PUM-R information flow.

Table 3 — Contents of PUM-R

Service element	Allowed value	Request	Confirm
PUM user's identity	- PUM number - alternative identifier	M	
Hosting address		M	
Basic service indicator	- a specific basic service - all basic services	M	
Activating user's address		O (NOTE 3)	
Service option	- InCall registration - OutCall registration - AllCall registration	O	O (NOTE 4)
Parameter(s) for service option	- Duration of the registration session (for InCall, OutCall and AllCall registration) - Number of outgoing calls (for OutCall registration)	O	O (NOTE 4)
PUM user's PIN		O (NOTE 5)	
Result	- accepted - rejected		M
PUM number			O (NOTE 6)
Cause of rejection	- PUM user's identity not known; - PUM user not permitted to register at this address; - PUM user not subscribed to this service option or parameter; - PUM user failed authentication; - hosting address invalid.		O (NOTE 7)

© ISO/IEC 2000 – All rights reserved
Copyright International Organization for Standardization
Provided by IHS under license with ISO
No reproduction or networking permitted without license from IHS
Not for Resale

NOTE 3 - This service element shall be included over relationship rb, and shall not be included over relationship ra.

NOTE 4 - This service element shall be included if it is present in the corresponding received PUM-R information flow.

NOTE 5 - This service element is used for authentication purposes, see clause 6.2.2.2

NOTE 6 - This service element is mandatory if the result is "accepted".

NOTE 7 - This service element shall only be included if the result is "rejected".

7.2.1.2 R-DEL

This confirmed information flow is used to request the deletion of a PUM user's location information in FE4 or FE6. It is sent across relationship rd from FE5 to FE4 and across relationship re from FE5 to FE6. Table 4 lists the elements within the R-DEL information flow.

Table 4 — Contents of R-DEL

Service elements	Allowed value	Request	Confirm
PUM number		M	
Hosting address		M	
Basic service indicator	- a specific basic service - all basic services	M	
Service option	- InCall registration - OutCall registration - AllCall registration - all registrations for this PUM number at this hosting address	M	
Result	- accepted - rejected		M
Cause of rejection	- de-registration not possible - PUM user not registered		O (NOTE 8)

NOTE 8 - This service element shall only be included if the result is "rejected".

--`,,```,,,,````-`-`,,`,,`,`,,`---
© ISO/IEC 2000 – All rights reserved
Copyright International Organization for Standardization
Provided by IHS under license with ISO
No reproduction or networking permitted without license from IHS
Not for Resale

7.2.1.3 PUM-DR1

This confirmed information flow is used to perform an explicit PUM de-registration at a specific hosting address. PUM-DR1 Requests are sent across relationship ra from FE1 to FE2, and relayed by FE2 across relationship rh towards FE5. Table 5 lists the elements within the PUM-DR1 information flow.

Table 5 — Contents of PUM-DR1

Service elements	Allowed value	Request	Confirm
PUM user's identity	- PUM number - alternative identifier	M	
Hosting address		O (NOTE 9)	
Basic service indicator	- a specific basic service - all basic services	M	
Activating user's address		O (NOTE 10)	
Service option	- InCall registration - OutCall registration - AllCall registration - all registrations for this PUM user at specified hosting address(es)	O (NOTE 11)	
PUM user's PIN		O (NOTE 12)	
Result	- accepted - rejected		M
Cause of rejection	- PUM user's identity not known; - PUM user not registered; - PUM user failed authentication; - de-registration not possible; - hosting address invalid.		O (NOTE 13)

NOTE 9 - If this service element is omitted, it shall be interpreted as a request to de-register the PUM user at all hosting addresses.

NOTE 10 - This service element shall be included over relationship rb, and shall not be included over relationship ra.

NOTE 11 - If this service element is omitted, it shall be interpreted as "all registrations for this PUM user at specified hosting address(es)".

NOTE 12 - This service element is used for authentication purposes, see clause 6.2.2.2

NOTE 13 - This service element shall only be included if the result is "rejected".

© ISO/IEC 2000 – All rights reserved
Copyright International Organization for Standardization
Provided by IHS under license with ISO
No reproduction or networking permitted without license from IHS
Not for Resale

7.2.1.4 PUM-DR2

This confirmed information flow is used to perform a conditional PUM de-registration at a specific hosting address. PUM-DR2 Requests are sent across relationship rd from FE4 to FE5. Table 6 lists the elements within the PUM-DR1 information flow.

Table 6 — Contents of PUM-DR2

Service elements	Allowed value	Request	Confirm
PUM user's identity	- PUM number	M	
Hosting address		M	
Basic service indicator	- a specific basic service - all basic services	M	
Service option	- InCall registration - OutCall registration - AllCall registration	M	
Result	- accepted - rejected		M
Cause of rejection	- PUM user not registered; - de-registration not possible; - hosting address invalid.		O (NOTE 14)

NOTE 14 - This service element shall only be included if the result is "rejected".

© ISO/IEC 2000 – All rights reserved

Copyright International Organization for Standardization
Provided by IHS under license with ISO
No reproduction or networking permitted without license from IHS
Not for Resale

7.2.1.5 PUM-I1

This confirmed information flow is used to perform a PUM service interrogation. PUM-I1 Requests are sent across relationship ra from FE1 to FE2, and (possibly after an inquiry to FE8) relayed by FE2 across relationship rh towards FE5. Table 7 lists the elements within the PUM-I1 information flow.

Table 7 — Contents of PUM-I1

Service elements	Allowed value	Request	Confirm
PUM user's identity	- PUM number - alternative identifier	M (NOTE 15)	
Hosting address		M	
Basic service indicator	- a specific basic service - all basic services	M	O
Interrogation Type	- basic information - complete information	M	
Activating user's address		O (NOTE 16)	
Service option	- InCall registration - all OutCall registrations - AllCall registration - all registrations	O (NOTE 17)	O (NOTE 18)
PUM user's PIN		O (NOTE 19)	
Result	- accepted - rejected		M
Basic Interrogation parameter(s)	- hosting address(es)		O (NOTE 18)
Complete Interrogation parameter(s)	- time remaining in limited period registration - number of calls remaining in limited call count registration		O (NOTE 20)
Cause of rejection	- PUM user's identity not known; - PUM user not registered; - PUM user failed authentication; - interrogation not allowed.		O (NOTE 21)

NOTE 15 - Across relationship rh, this value shall be the PUM number.

NOTE 16 - This service element shall be included over relationship rh, and shall not be included over relationship ra.

NOTE 17 - If this service element is omitted, it shall be interpreted as "all registrations".

NOTE 18 - This service element shall only be included if the result is "accepted"

NOTE 19 - This service element is used for authentication purposes, see clause 6.2.2.2

NOTE 20 - This service element shall only be included in the Confirm information flow if the result is "accepted" and service element "Interrogation type" was set to "complete information" in the corresponding Request information flow.

NOTE 21 - This service element shall only be included if the result is "rejected".

© ISO/IEC 2000 – All rights reserved
Copyright International Organization for Standardization
Provided by IHS under license with ISO
No reproduction or networking permitted without license from IHS
Not for Resale

7.2.1.6 PUM-I2

This confirmed information flow is used to request PUM service information from the Visitor PINX in the case where an interrogation with complete information is specified. PUM-I2 Requests are sent across relationship rd from FE5 to FE4. Table 8 lists the elements within the PUM-I2 information flow.

Table 8 — Contents of PUM-I2

Service elements	Allowed value	Request	Confirm
PUM user's identity	- PUM number	M	
Basic service indicator	- a specific basic service - all basic services	M	O
Service option	- InCall registration - all OutCall registrations - AllCall registration - all registrations	O (NOTE 22)	O (NOTE 23)
Result	- accepted - rejected		M
Basic Interrogation parameter(s)	- hosting address(es)		O (NOTE 24)
Complete Interrogation parameter(s)	- time remaining in limited period registration - number of calls remaining in limited call count registration		O (NOTE 25)
Cause of rejection	- PUM user not registered;		O (NOTE 26)

NOTE 22 - If this service element is omitted, it shall be interpreted as "all registrations".

NOTE 23 - This service element shall only be included in the Confirm information flow if the result is "accepted" and service element "Service option" was set to "all registrations" in the corresponding request information flow.

NOTE 24 - This service element shall only be included in the Confirm information flow if the result is "accepted" and service element "Service option" was set to "all OutCall registrations" or "all registrations" in the corresponding request information flow.

NOTE 25 - This service element shall only be included if the result is "accepted".

NOTE 26 - This service element shall only be included if the result is "rejected".

7.2.1.7 PISN-ENQ

This confirmed information flow is used to request the PUM number for a PUM user identified by an alternative identifier. It shall be sent across relationship rg. Table 9 lists the elements within the PISN-ENQ information flow.

Table 9 — Contents of PISN-ENQ

Service elements	Allowed value	Request	Confirm
PUM user's identity	alternative identifier	M	
PUM number			O (NOTE 27)
Result	- accepted - rejected		M

NOTE 27 - This service element is mandatory if the result is "accepted".

© ISO/IEC 2000 – All rights reserved

Copyright International Organization for Standardization
Provided by IHS under license with ISO
No reproduction or networking permitted without license from IHS
Not for Resale

7.2.1.8 R-INFO

This unconfirmed information flow is used to inform FE3 of a PUM registration. It shall be sent across relationship rc from FE4 to FE3. Table 10 lists the elements within the R-INFO information flow.

Table 10 — Contents of R-INFO

Service elements	Allowed value	Request	Confirm
PUM number		M	
Basic service indicator	- a specific basic service - all basic services	M	
Service option	- InCall registration - OutCall registration - AllCall registration	O (NOTE 28)	
Parameter(s) for service option	- Duration of the registration session (for InCall, OutCall and AllCall registration) - Number of outgoing calls (for OutCall registration)	O (NOTE 28)	

NOTE 28 - This service element shall be included if it is available to FE4.

7.2.1.9 DR-INFO

This unconfirmed information flow is used to inform FE3 or FE7 of a PUM de-registration. It shall be sent across relationship rc from FE4 to FE3 and across relationship rf from FE6 to FE7. Table 11 lists the elements within the DR-INFO information flow.

Table 11 — Contents of DR-INFO

Service elements	Allowed value	Request	Confirm
PUM number		M	
Basic service indicator	- a specific basic service - all basic services	M	
Service option	- InCall registration - OutCall registration - AllCall registration - all registrations for this PUM number	O (NOTE 29)	

NOTE 29 - This service element shall be included if it is available to the sending FE.

7.2.2 Relationship of information flows to basic call information flows

All SS-PUMR information flows are independent of basic call information flows.

7.2.3 Information flow sequences

A stage 3 standard for SS-PUMR shall provide signalling procedures in support of the information flow sequences specified below. In addition, signalling procedures should be provided to cover other sequences arising from error situations, interactions with basic call, interactions with other supplementary services, different topologies, etc.

In the figures, SS-PUMR information flows are represented by solid arrows. Within a column representing a SS-PUMR functional entity, the numbers refer to functional entity actions listed in 7.3.

The following abbreviations are used:

req request;

ind indication;

© ISO/IEC 2000 – All rights reserved
Copyright International Organization for Standardization
Provided by IHS under license with ISO
No reproduction or networking permitted without license from IHS
Not for Resale

resp response;

conf confirm.

7.2.3.1 PUM registration diagrams

Figure 3 shows the information flow sequence for PUM registration in the case where the PUM number is provided for identification.

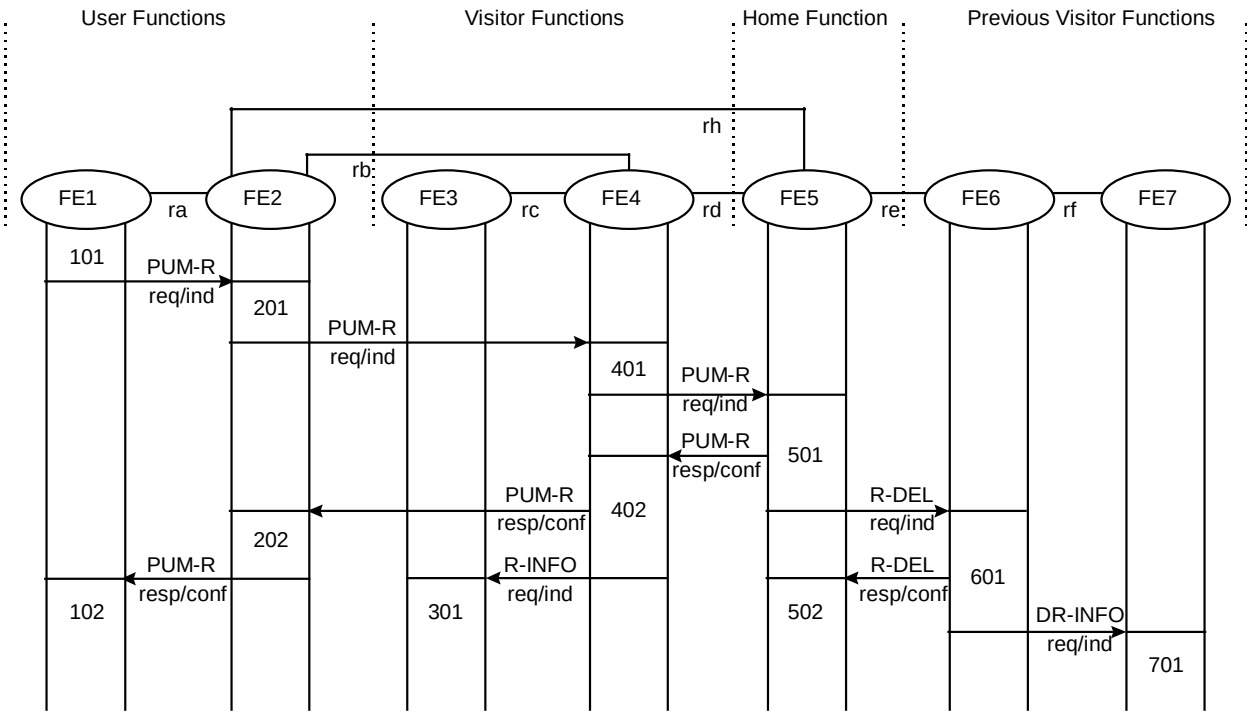

Figure 3 — PUM registration using the PUM number

Figure 4 shows the information flow sequence for PUM registration in the case where an alternative identifier (rather than the PUM number) is provided for identification.

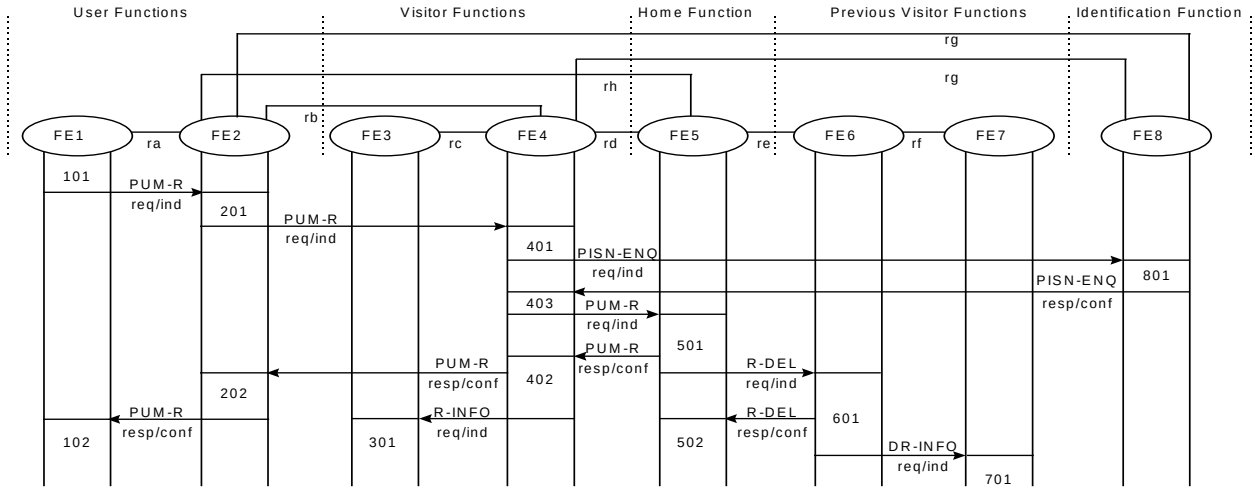

Figure 4 — PUM registration using an alternative identifier

7.2.3.2 PUM de-registration diagrams

Figure 5 shows the information flow sequence for explicit PUM de-registration when a PUM number is provided.

--`,,```,,,,````-`-`,,`,,`,`,,`---

© ISO/IEC 2000 – All rights reserved

Copyright International Organization for Standardization
Provided by IHS under license with ISO
No reproduction or networking permitted without license from IHS
Not for Resale

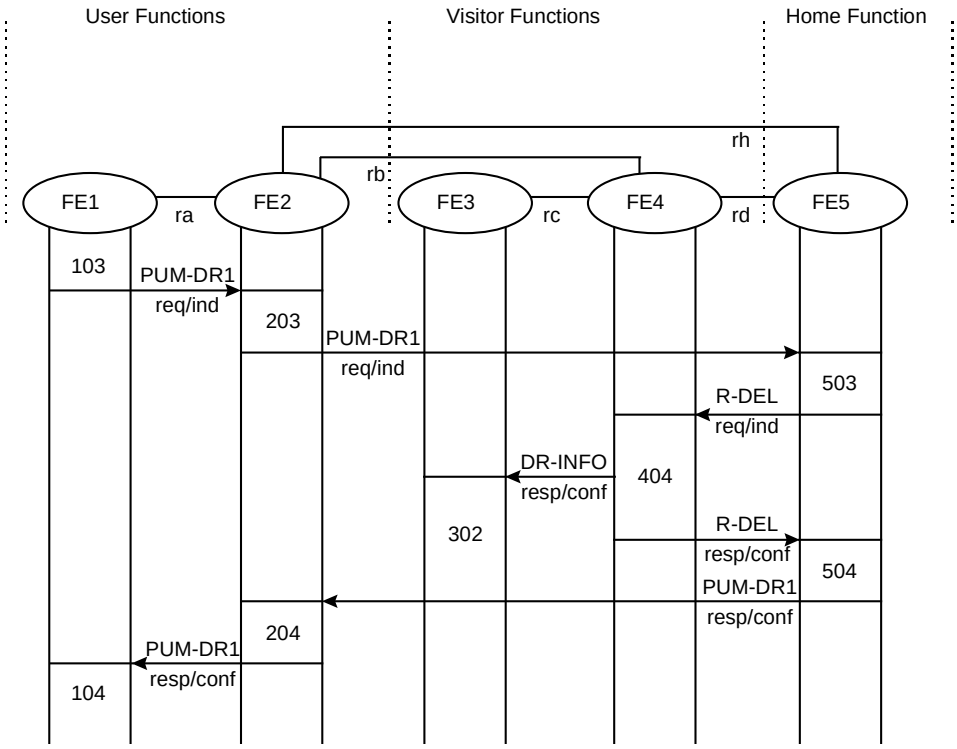

Figure 5 — PUM de-registration when the PUM number is provided

Figure 6 shows the information flow sequence for explicit PUM de-registration when an alternative identifier is provided.

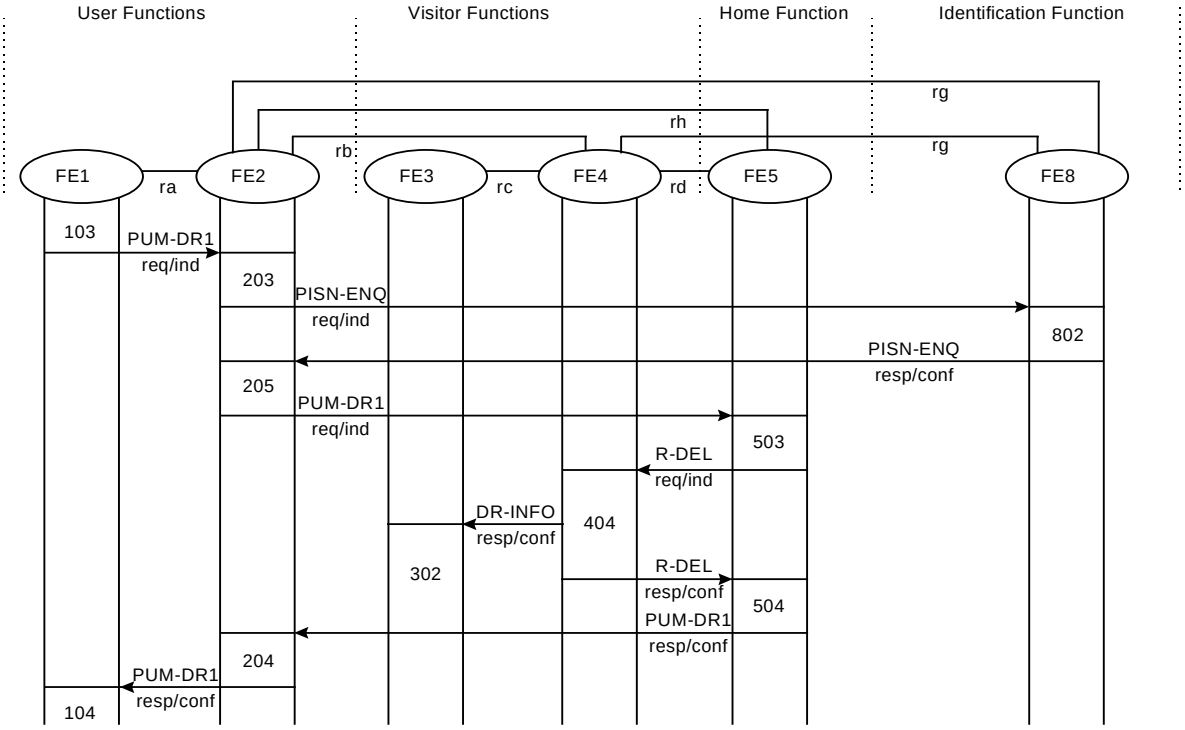

Figure 6 — PUM de-registration at an unspecified hosting address when an alternative identifier is provided

Figure 7 shows the information flow sequence for conditional PUM de-registration.

© ISO/IEC 2000 – All rights reserved
Copyright International Organization for Standardization
Provided by IHS under license with ISO
No reproduction or networking permitted without license from IHS
Not for Resale

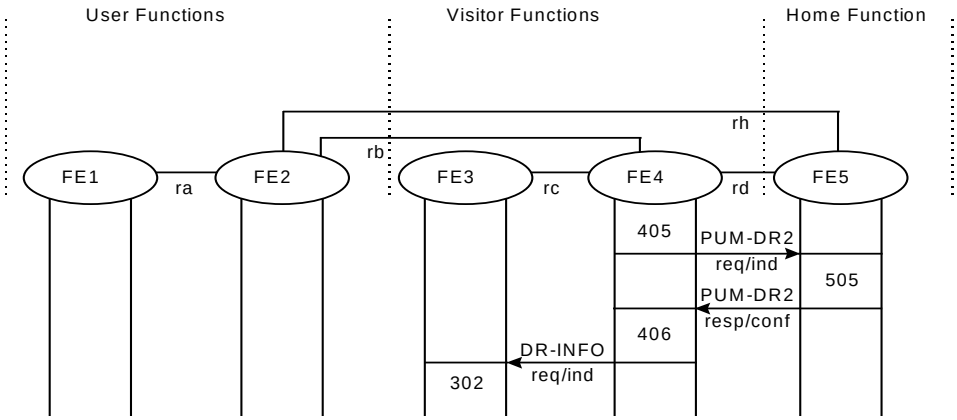

Figure 7 — Conditional PUM de-registration

7.2.3.3 PUM service interrogation diagrams

Figures 8 and 9 shows the information flow sequence for a PUM interrogation service. It is assumed that the PUM number is provided.

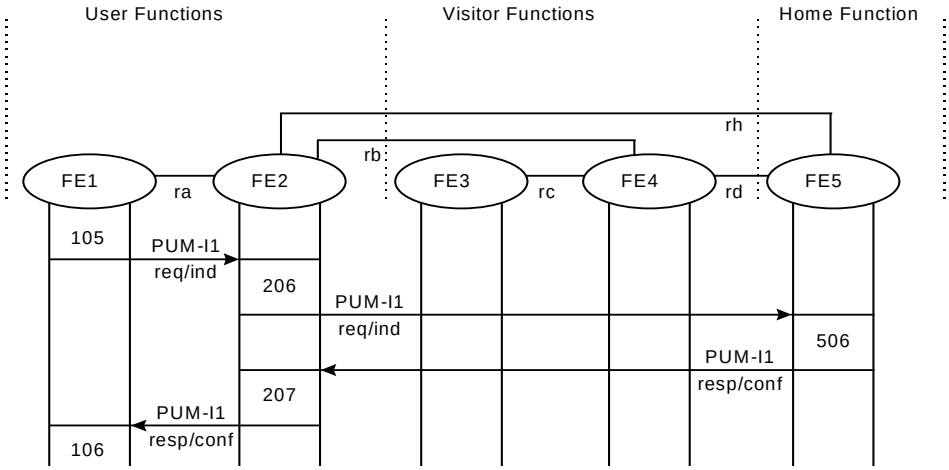

Figure 8 — PUM interrogation when basic information is requested

© ISO/IEC 2000 – All rights reserved

Copyright International Organization for Standardization
Provided by IHS under license with ISO
No reproduction or networking permitted without license from IHS
Not for Resale

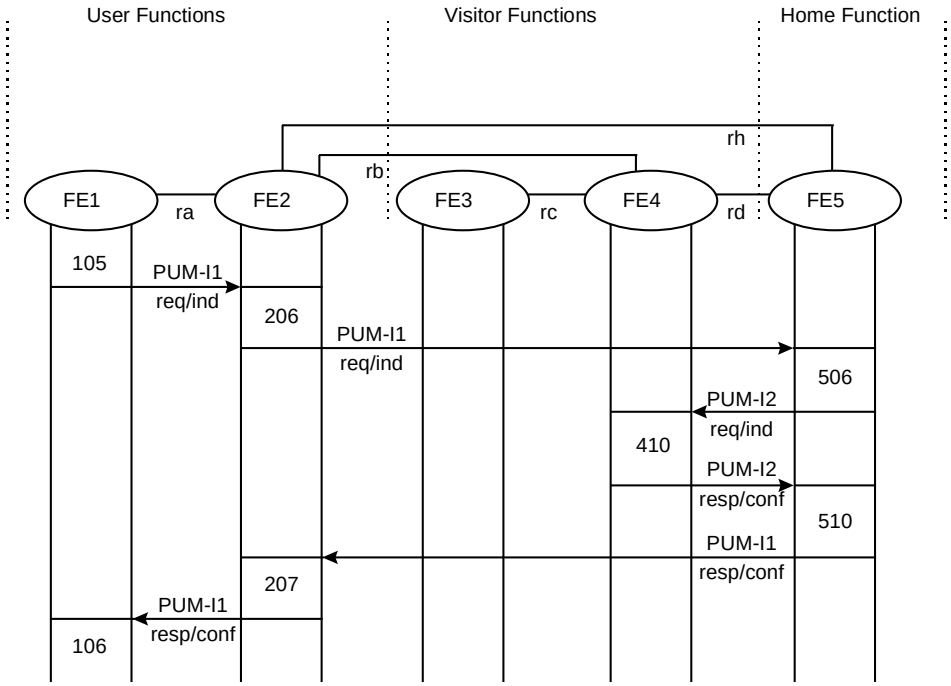

Figure 9 — PUM interrogation when complete information is requested

7.2.3.4 Diagrams for cases of unsuccessful operation

Figure 10 shows the information flow sequence for the case where the PUM registration request is rejected by FE4.

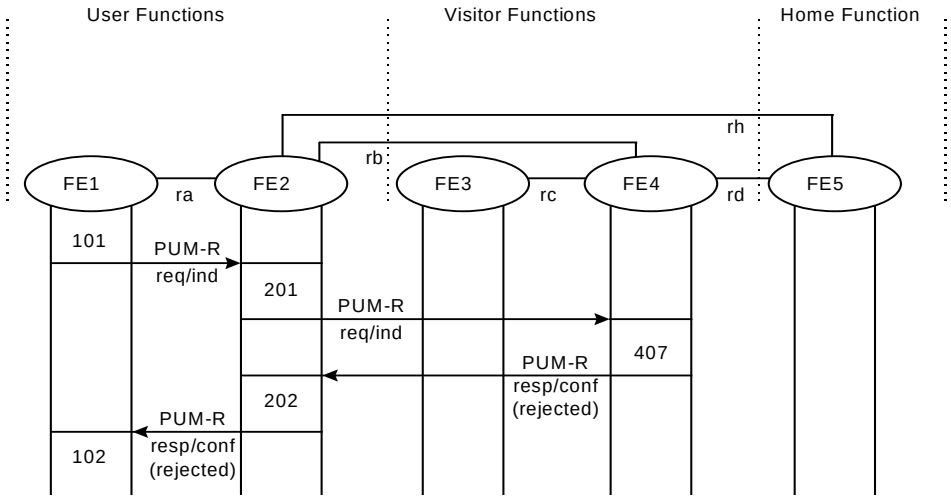

Figure 10 — PUM registration rejected by FE4

© ISO/IEC 2000 – All rights reserved
Copyright International Organization for Standardization
Provided by IHS under license with ISO
No reproduction or networking permitted without license from IHS
Not for Resale

Figure 11 shows the information flow sequence for the case where the PUM registration request is rejected by FE5.

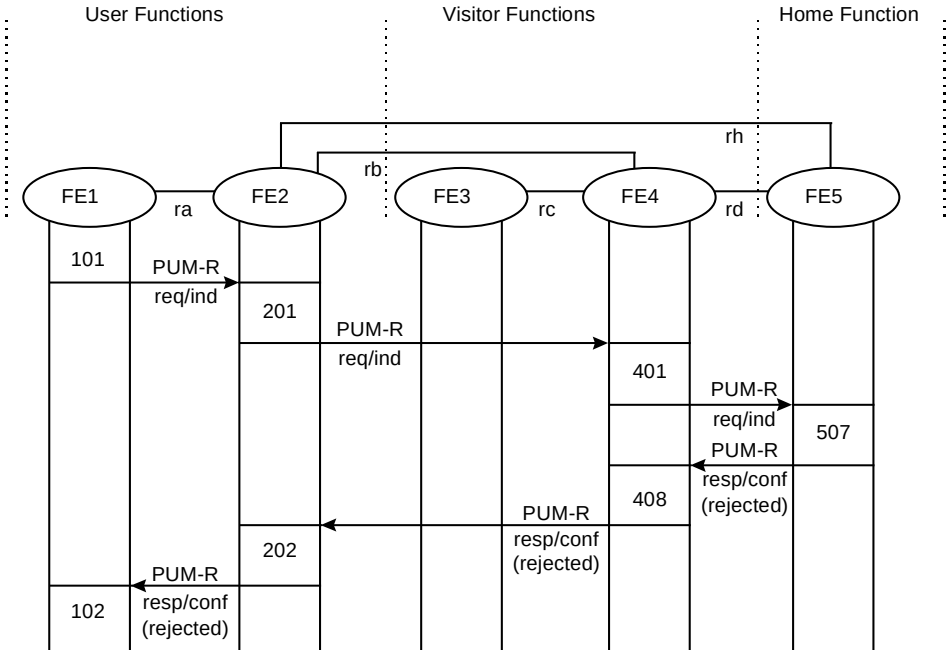

Figure 11 — PUM registration rejected by FE5

Figure 12 shows the information flow sequence for the case where an explicit PUM de-registration request specifying the PUM number is rejected by FE5.

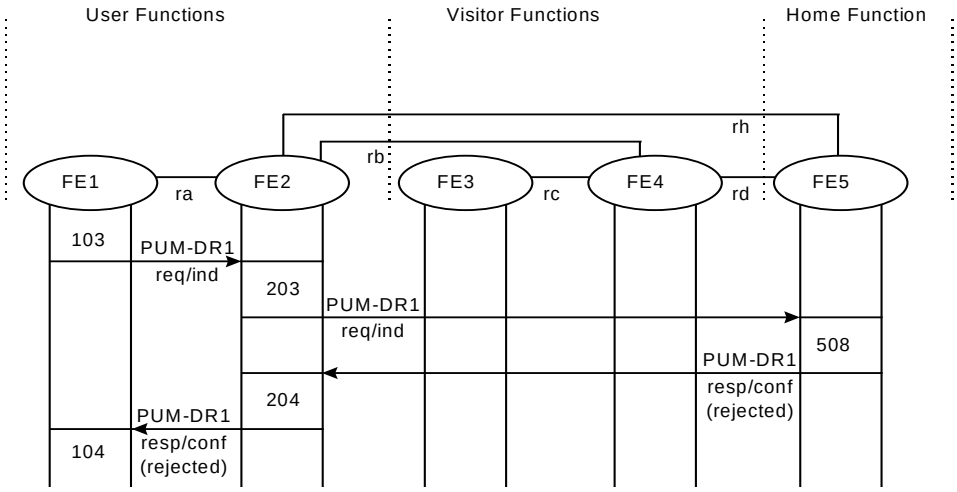

Figure 12 — Explicit PUM de-registration rejected by FE5

Figure 13 shows the information flow sequence for the case where the PUM registration request is rejected by FE2.

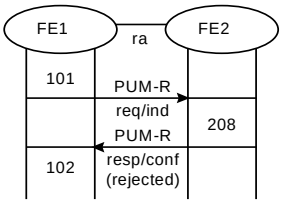

Figure 13 — PUM registration rejected by FE2

--`,,```,,,,````-`-`,,`,,`,`,,`---

© ISO/IEC 2000 – All rights reserved
Copyright International Organization for Standardization
Provided by IHS under license with ISO
No reproduction or networking permitted without license from IHS
Not for Resale

Figure 14 shows the information flow sequence for the case where, following the acceptance of the registration request by FE4 and FE5, the corresponding registration deletion request is rejected by FE6.

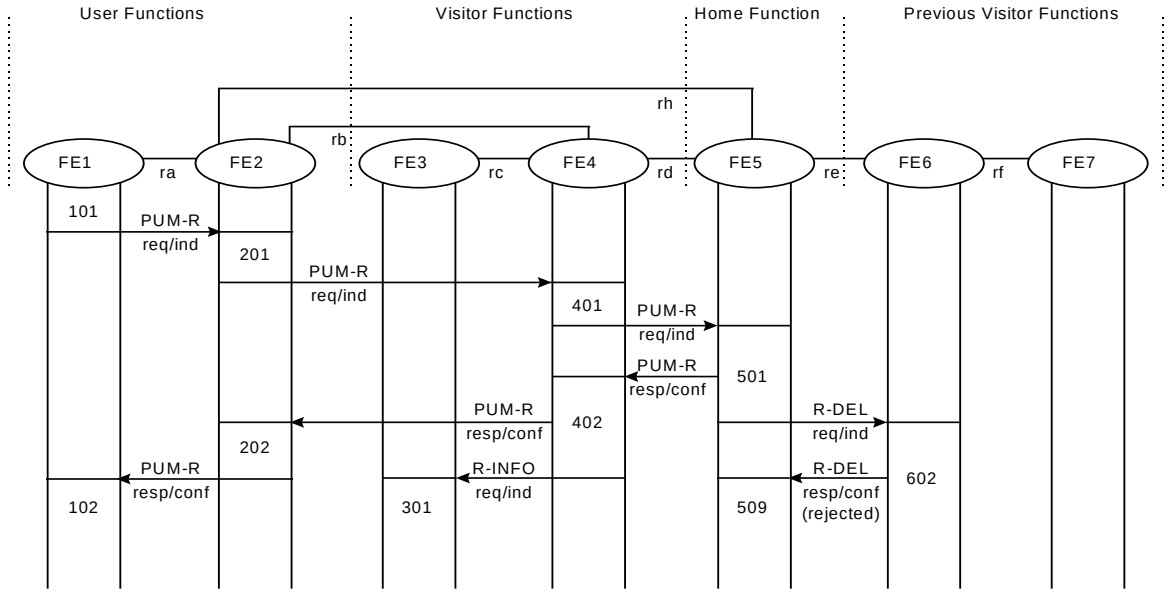

Figure 14 — PUM registration deletion rejected by FE6

Figure 15 shows the information flow sequence for the case where the PISN enquiry request is rejected by FE8.

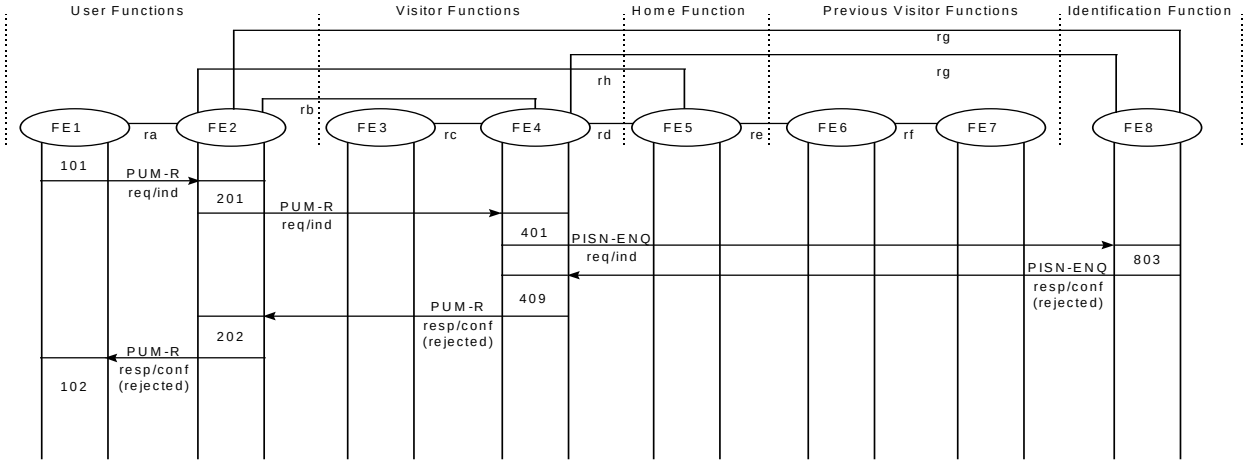

Figure 15 — PISN enquiry request rejected by FE8

7.3 Functional Entity actions

The following FE actions shall occur at the points indicated in the figures of Information flow sequences.

7.3.1 Actions of FE1

101: The FE shall detect the initiation of PUM registration, and send a PUM-R req/ind information flow to FE2. PUM registration may be initiated by the PUM user or the PISN.

102: The FE shall receive a PUM-R resp/conf information flow from FE2, and deliver a corresponding indication to the requesting entity.

103: The FE shall detect the initiation of an explicit PUM de-registration and send a PUM-DR1 req/ind information flow to FE2.

104: The FE shall receive a PUM-DR1 resp/conf information flow from FE2 and deliver a corresponding indication to the requesting user.

105: The FE shall detect the initiation of a PUM interrogation and send a PUM-I1 req/ind information flow to FE2.

© ISO/IEC 2000 – All rights reserved
Copyright International Organization for Standardization
Provided by IHS under license with ISO
No reproduction or networking permitted without license from IHS
Not for Resale

106: The FE shall receive a PUM-I1 resp/conf information flow from FE2 and deliver the corresponding information to the requesting user.

7.3.2 Actions of FE2

201: The FE shall receive a PUM-R req/ind information flow from FE1 and relay it to FE4.

202: The FE shall receive a PUM-R resp/conf information flow from FE4 and relay it to FE1.

203: The FE shall receive a PUM-DR1 req/ind information flow from FE1. If the PUM number is provided, the FE shall relay the PUM-DR1 req/ind information flow to FE5. If an alternative identifier is provided, the FE shall send a PISN-ENQ req/ind information flow to FE8.

204: The FE shall receive a PUM-DR1 resp/conf information flow from FE5 and relay it to FE1.

205: The FE shall receive a PISN-ENQ resp/conf information flow (accepted) from FE8 and send a PUM-DR1 req/ind information flow including the PUM number to FE5.

206: The FE shall receive a PUM-I1 req/ind information flow from FE1 and relay it to FE5.

207: The FE shall receive a PUM-I1 resp/conf information flow from FE5 and relay it to FE1.

208: The FE shall receive a PUM-R req/ind information flow from FE1 and send a PUM-R resp/conf information flow (rejected) back to FE1.

7.3.3 Actions of FE3

301: The FE shall receive a R-INFO req/ind information flow from FE4 and deliver a corresponding indication to the user.

302: The FE shall receive a DR-INFO req/ind information flow from FE4 and deliver a corresponding indication to the user.

7.3.4 Actions of FE4

401: The FE shall receive a PUM-R req/ind information flow from FE2. If the PUM number is provided, the FE shall pass on the PUM-R req/ind information flow to FE5. If an alternative identifier is provided, the FE shall send a PISN-ENQ req/ind information flow to FE8.

402: The FE shall receive a PUM-R resp/conf information flow (accepted) from FE5 and shall register the PUM user by adding a corresponding entry in the VDB. The FE shall pass on the PUM-R resp/conf information flow (accepted) to FE2 and send a R-INFO req/ind information flow to FE3.

403: The FE shall receive a PISN-ENQ resp/conf information flow (accepted) from FE8 and send a PUM-R req/ind information flow to FE5.

404: The FE shall receive a R-DEL req/ind information flow from FE5 and shall de-register the PUM user by deleting the corresponding entry in the VDB. The FE shall send a R-DEL resp/conf information flow (accepted) to FE5 and a DR-INFO req/ind information flow to FE3.

405: The FE shall detect a reason for de-registering the PUM user (conditional de-registration) and send a PUM-DR2 req/ind information flow to FE5.

406: The FE shall receive a PUM-DR2 resp/conf information flow (accepted) from FE5 and shall de-register the PUM user by deleting the corresponding entry in the VDB. The FE shall send a DR-INFO req/ind information flow to FE3.

407: The FE shall receive a PUM-R req/ind information flow from FE2 and send a PUM-R resp/conf information flow (rejected) containing the cause of rejection to FE2.

408: The FE shall receive a PUM-R resp/conf information flow (rejected) from FE5 and send a PUM-R resp/conf information flow (rejected) containing the cause of rejection to FE2.

409: The FE shall receive a PISN-ENQ resp/conf information flow (rejected) from FE8 and send a PUM-R resp/conf information flow (rejected) containing the cause of rejection to FE2.

410: The FE shall receive a PUM-I2 req/ind information flow from FE5 and shall construct and send a PUM-I2 resp/conf information flow back to FE5.

7.3.5 Actions of FE5

501: The FE shall receive a PUM-R req/ind information flow from FE4, update the PUM user's entry in the HDB, and send a PUM-R resp/conf information flow (accepted) to FE4. The FE shall send a R-DEL req/ind information flow to FE6.

© ISO/IEC 2000 – All rights reserved

Copyright International Organization for Standardization
Provided by IHS under license with ISO
No reproduction or networking permitted without license from IHS
Not for Resale

502: The FE shall receive a R-DEL resp/conf information flow (accepted) from FE6.

503: The FE shall receive a PUM-DR1 req/ind information flow from FE2 and send a R-DEL req/ind information flow to FE4.

504: The FE shall receive a R-DEL resp/conf information flow (accepted) from FE4 and de-register the PUM user by updating the corresponding entry in the HDB. The FE shall send a PUM-DR resp/conf information flow (accepted) to FE2.

505: The FE shall receive a PUM-DR2 req/ind information flow from FE4 and de-register the PUM user by updating the corresponding entry in the HDB. The FE shall send a PUM-DR2 resp/conf information flow (accepted) to FE4.

506: The FE shall receive a PUM-I1 req/ind information flow from FE2. If this information flow indicates that only basic information is requested, the FE shall send a PUM-I1 resp/conf information flow (accepted) containing the requested interrogation information back to FE2. If, however, complete information is requested, the FE shall send a PUM-I2 req/ind to FE4.

507: The FE shall receive a PUM-R req/ind information flow from FE4 and send a PUM-R resp/conf information flow (rejected) containing the cause of rejection to FE4.

508: The FE shall receive a PUM-DR1 req/ind information flow from FE2 and send a PUM-DR1 resp/conf information flow (rejected) containing the cause of rejection to FE4.

509: The FE shall receive a R-DEL resp/conf information flow (rejected) from FE6 and take an implementation-specific action.

510: The FE shall receive a PUM-I2 resp/conf (accepted) from FE4 and send a PUM-I1 resp/conf (accepted) to FE2.

7.3.6 Actions of FE6

601: The FE shall receive a R-DEL req/ind information flow from FE5 and de-register the PUM user by deleting the corresponding entry in the VDB. The FE shall send a R-DEL resp/conf information flow (accepted) to FE5 and a DR-INFO req/ind information flow to FE7.

602: The FE shall receive a R-DEL req/ind information flow from FE5 and send a R-DEL resp/conf information flow (rejected) containing the cause of rejection to FE5.

7.3.7 Actions of FE7

701: The FE shall receive a DR-INFO req/ind information flow from FE6 and deliver a corresponding indication to the user (if applicable).

7.3.8 Actions of FE8

801: The FE shall receive a PISN-ENQ req/ind information flow from FE4 and send a PISN-ENQ resp/conf information flow containing the PUM number back to FE4.

802: The FE shall receive a PISN-ENQ req/ind information flow from FE2 and send a PISN-ENQ resp/conf information flow (accepted) containing the PUM number back to FE2.

803: The FE shall receive a PISN-ENQ req/ind information flow from FE4 and send a PISN-ENQ resp/conf information flow (rejected) back to FE2.

--`,,```,,,,````-`-`,,`,,`,`,,`---

© ISO/IEC 2000 – All rights reserved
Copyright International Organization for Standardization
Provided by IHS under license with ISO
No reproduction or networking permitted without license from IHS
Not for Resale

7.4 Functional entity behaviour

The FE behaviours shown below are intended to illustrate typical FE behaviour in terms of information flows sent and received.

The behaviour of each FE is shown using the Specification and Description Language (SDL) defined in ITU-T Rec. Z.100 (1993). Each input and output symbol is labelled to show the source FE of input signals or the destination FE of output signals.

7.4.1 Behaviour of FE1

Figure 16 shows the behaviour of FE1.

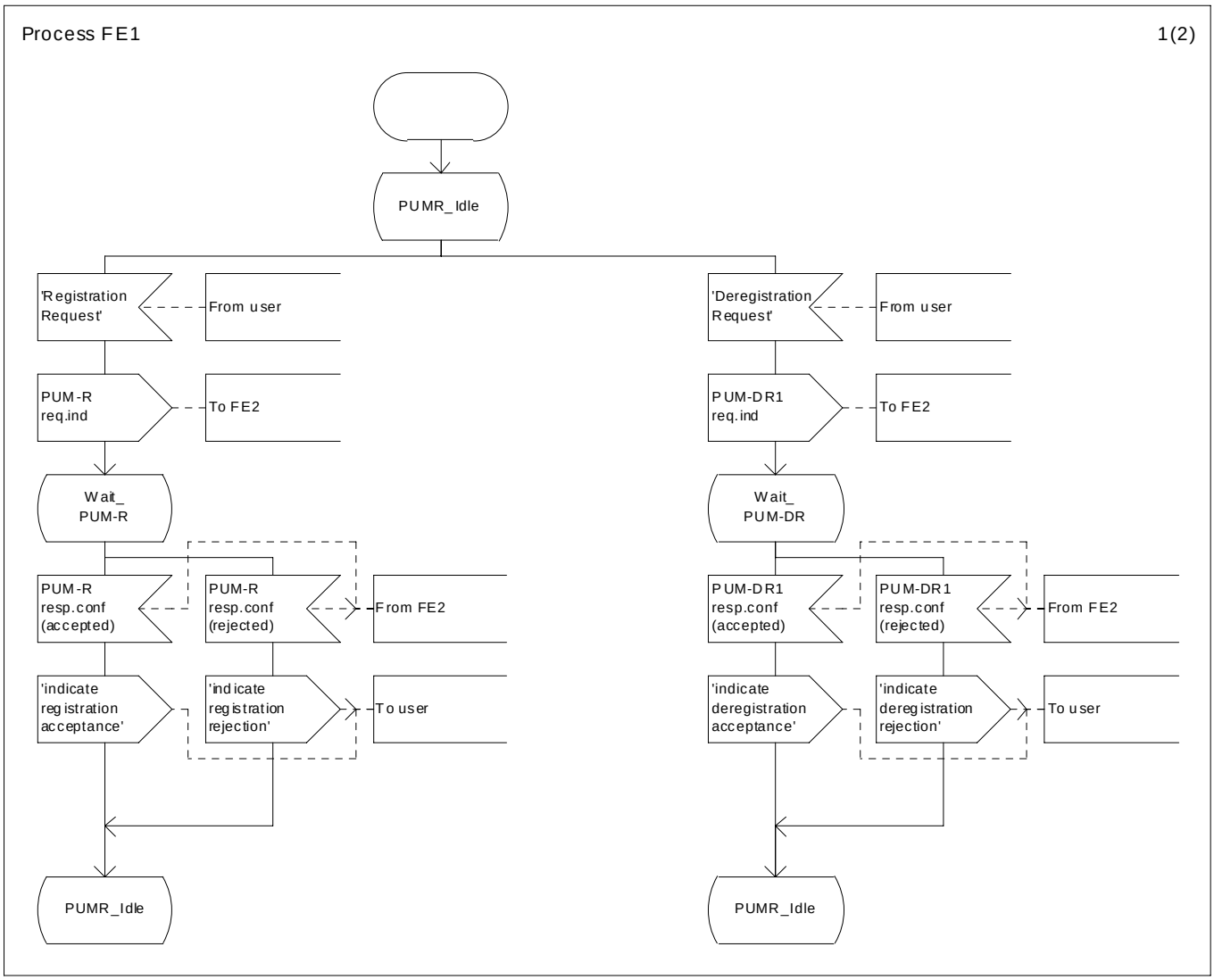

Figure 16 — SS-PUMR, SDL for FE1 - Part 1 of 2

© ISO/IEC 2000 – All rights reserved
Copyright International Organization for Standardization
Provided by IHS under license with ISO
No reproduction or networking permitted without license from IHS
Not for Resale

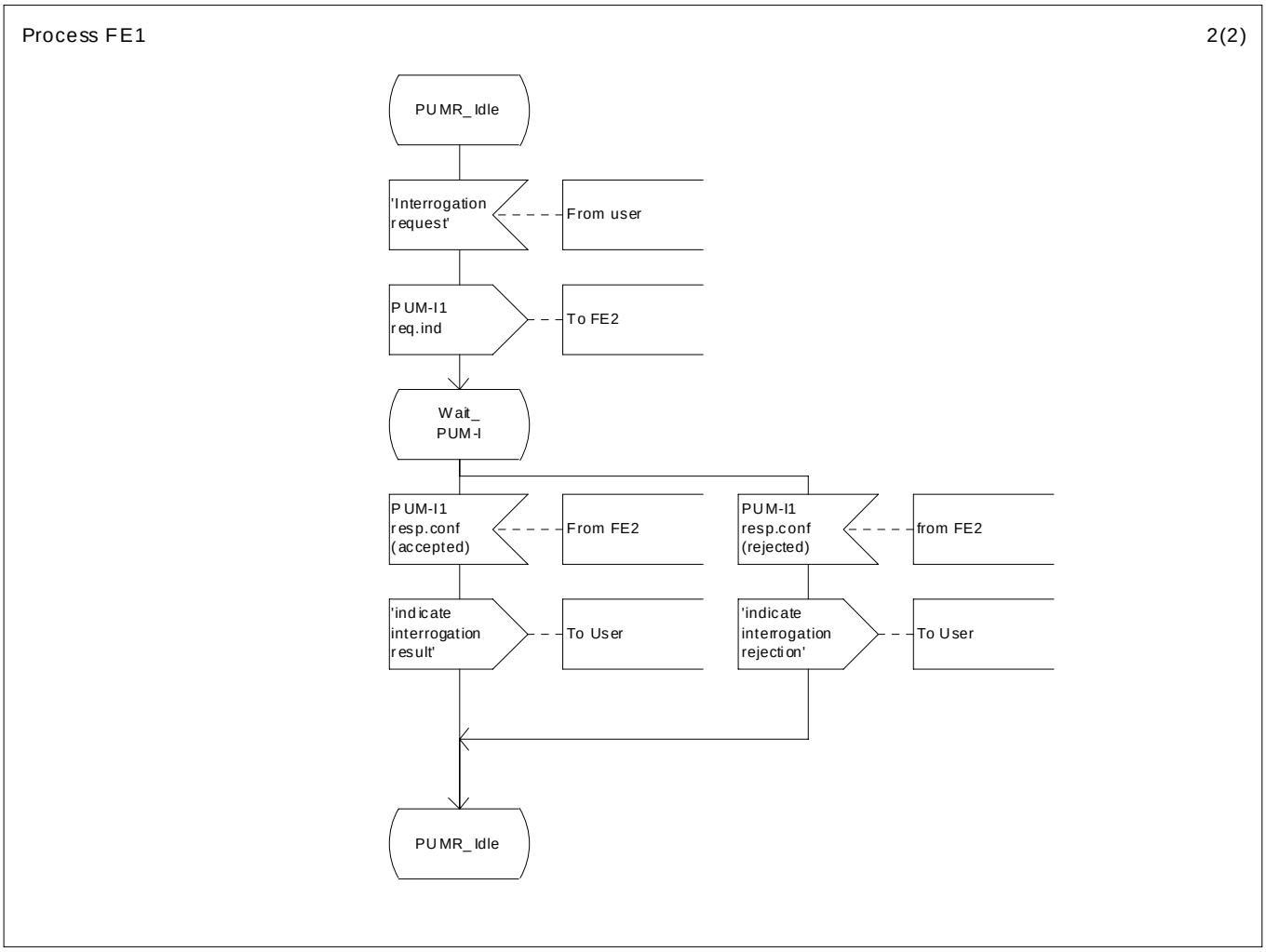

Figure 16 — SS-PUMR, SDL for FE1 - Part 2 of 2

--`,,```,,,,````-`-`,,`,,`,`,,`---

© ISO/IEC 2000 – All rights reserved
Copyright International Organization for Standardization
Provided by IHS under license with ISO
No reproduction or networking permitted without license from IHS
Not for Resale

7.4.2 Behaviour of FE2

Figure 17 shows the behaviour of FE2.

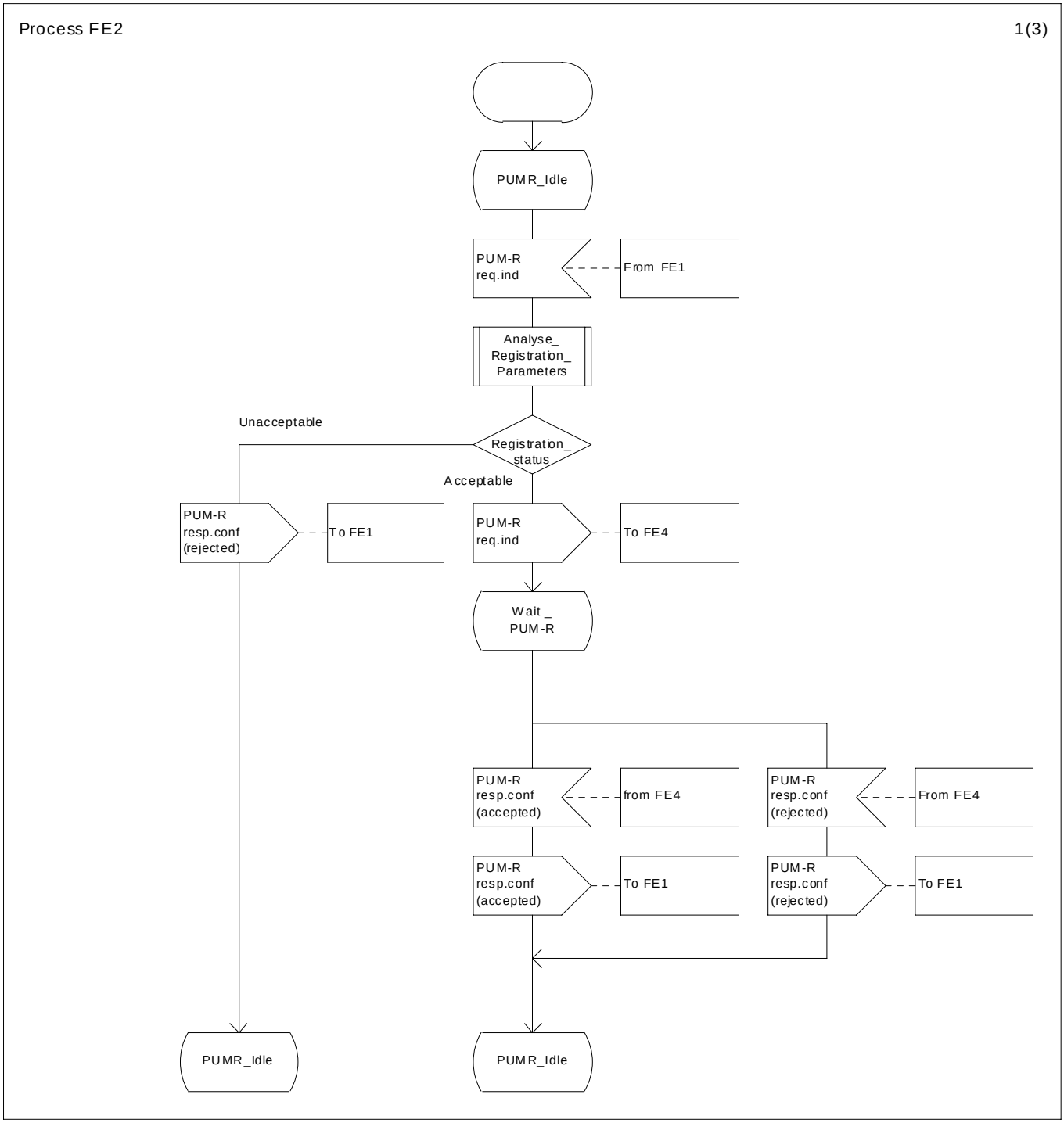

Figure 17 — SS-PUMR, SDL for FE2 - Part 1 of 3

© ISO/IEC 2000 – All rights reserved

Copyright International Organization for Standardization
Provided by IHS under license with ISO
No reproduction or networking permitted without license from IHS
Not for Resale

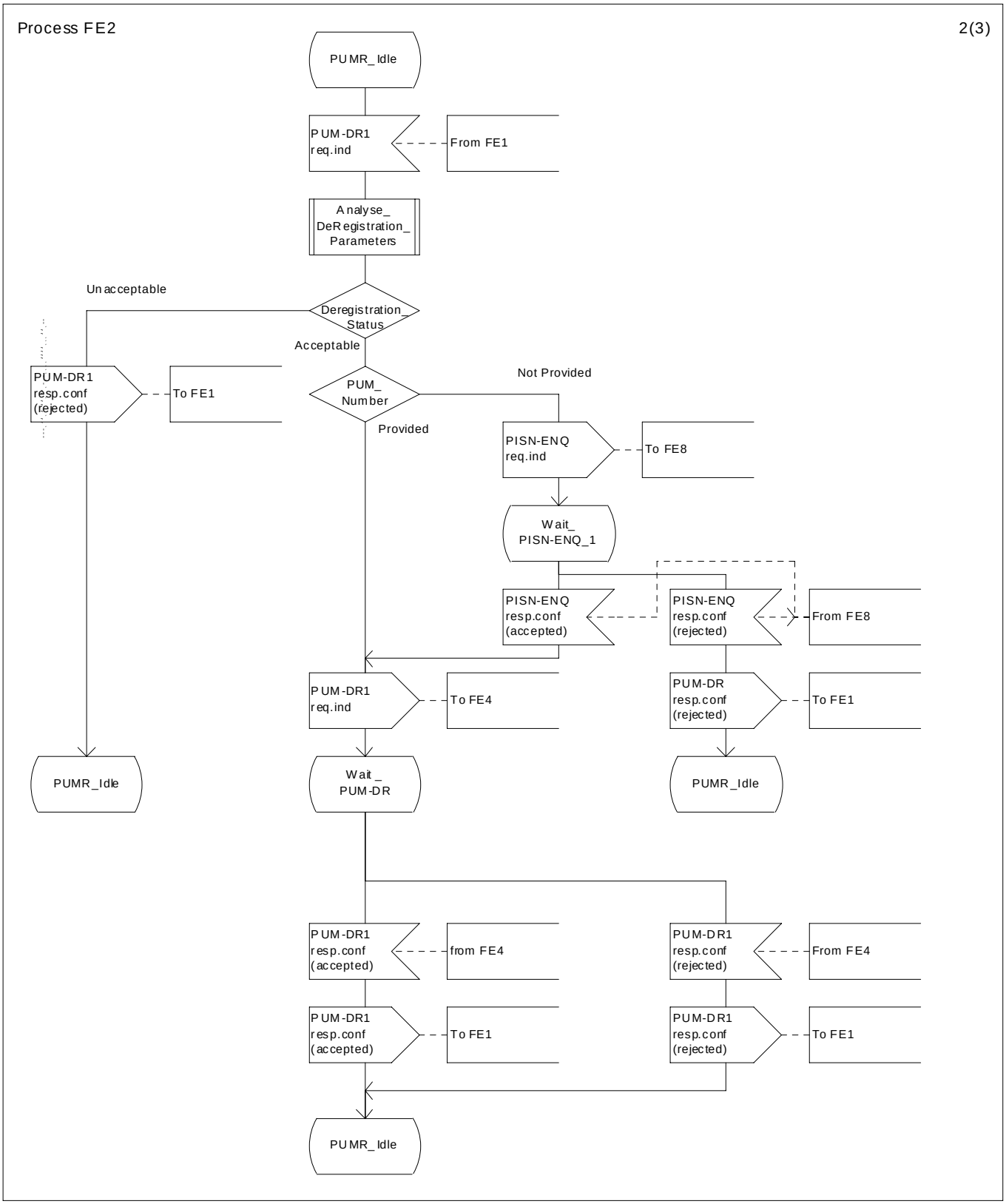

Figure 17 — SS-PUMR, SDL for FE2 - Part 2 of 3

© ISO/IEC 2000 – All rights reserved
Copyright International Organization for Standardization
Provided by IHS under license with ISO
No reproduction or networking permitted without license from IHS
Not for Resale

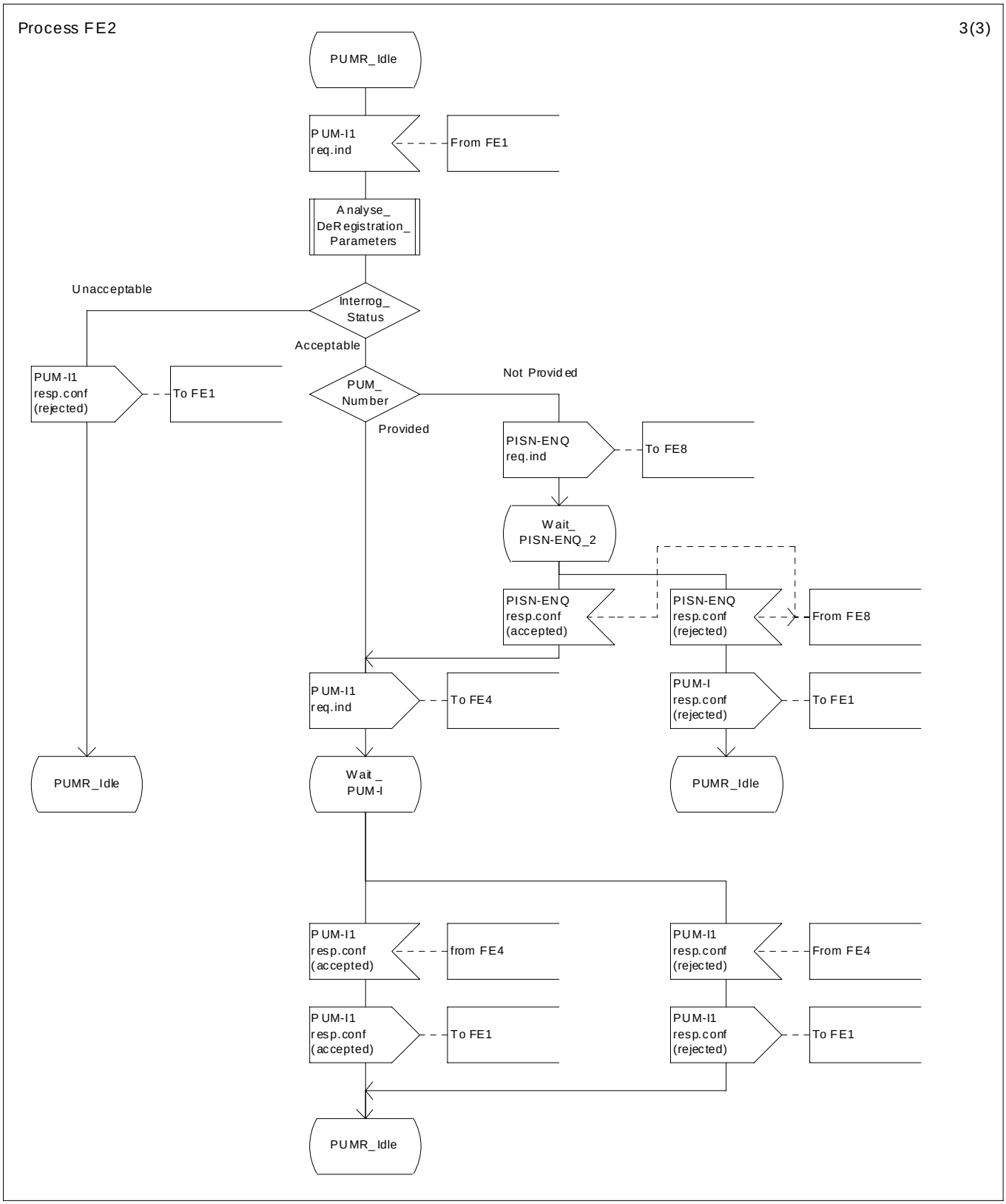

Figure 17 — SS-PUMR, SDL for FE2 - Part 3 of 3

© ISO/IEC 2000 – All rights reserved
Copyright International Organization for Standardization
Provided by IHS under license with ISO
No reproduction or networking permitted without license from IHS
Not for Resale

7.4.3 Behaviour of FE3

Figure 18 shows the behaviour of FE3.

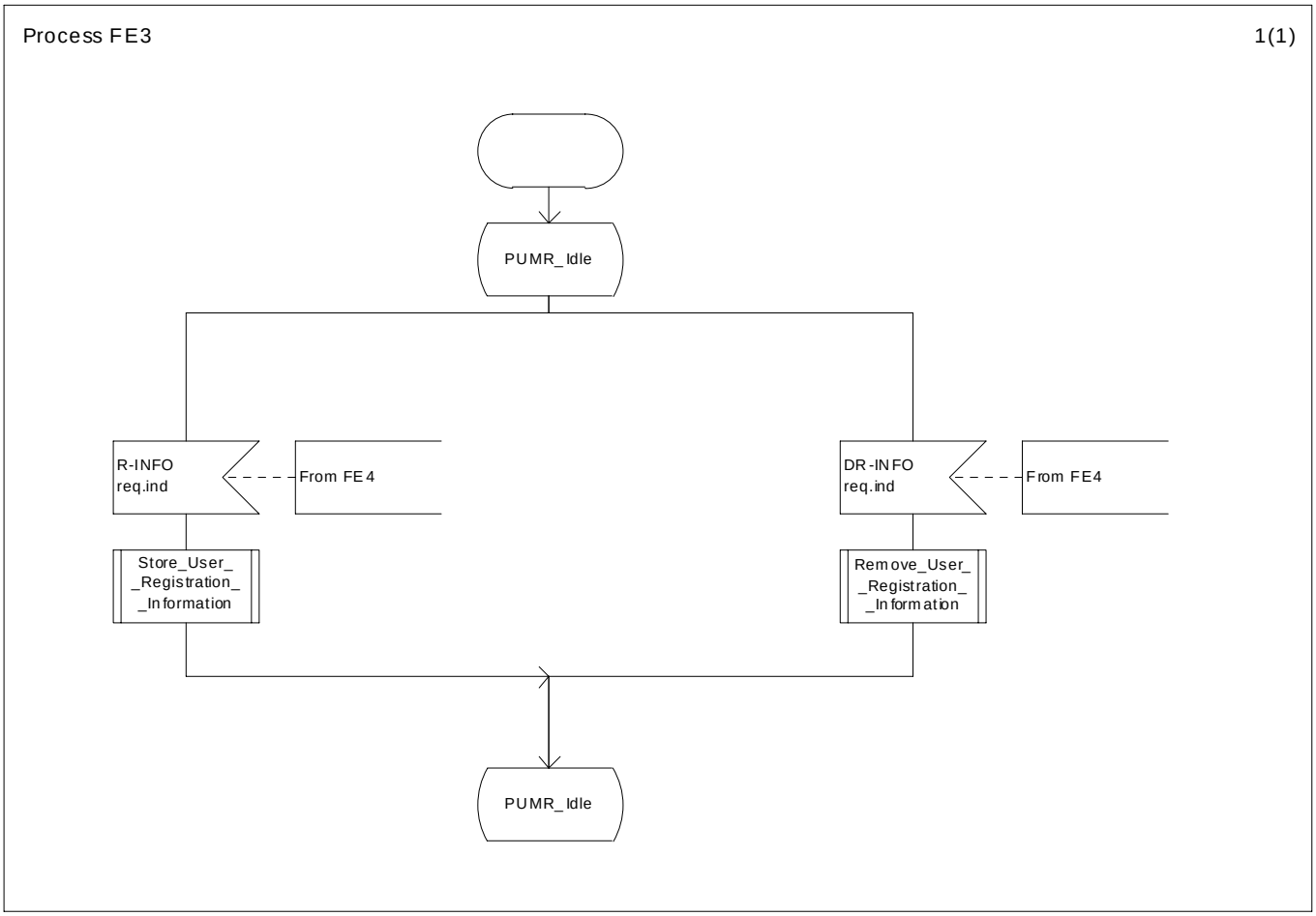

Figure 18 — SS-PUMR, SDL for FE3

© ISO/IEC 2000 – All rights reserved
Copyright International Organization for Standardization
Provided by IHS under license with ISO
No reproduction or networking permitted without license from IHS
Not for Resale

7.4.4 Behaviour of FE4

Figure 19 shows the behaviour of FE4.

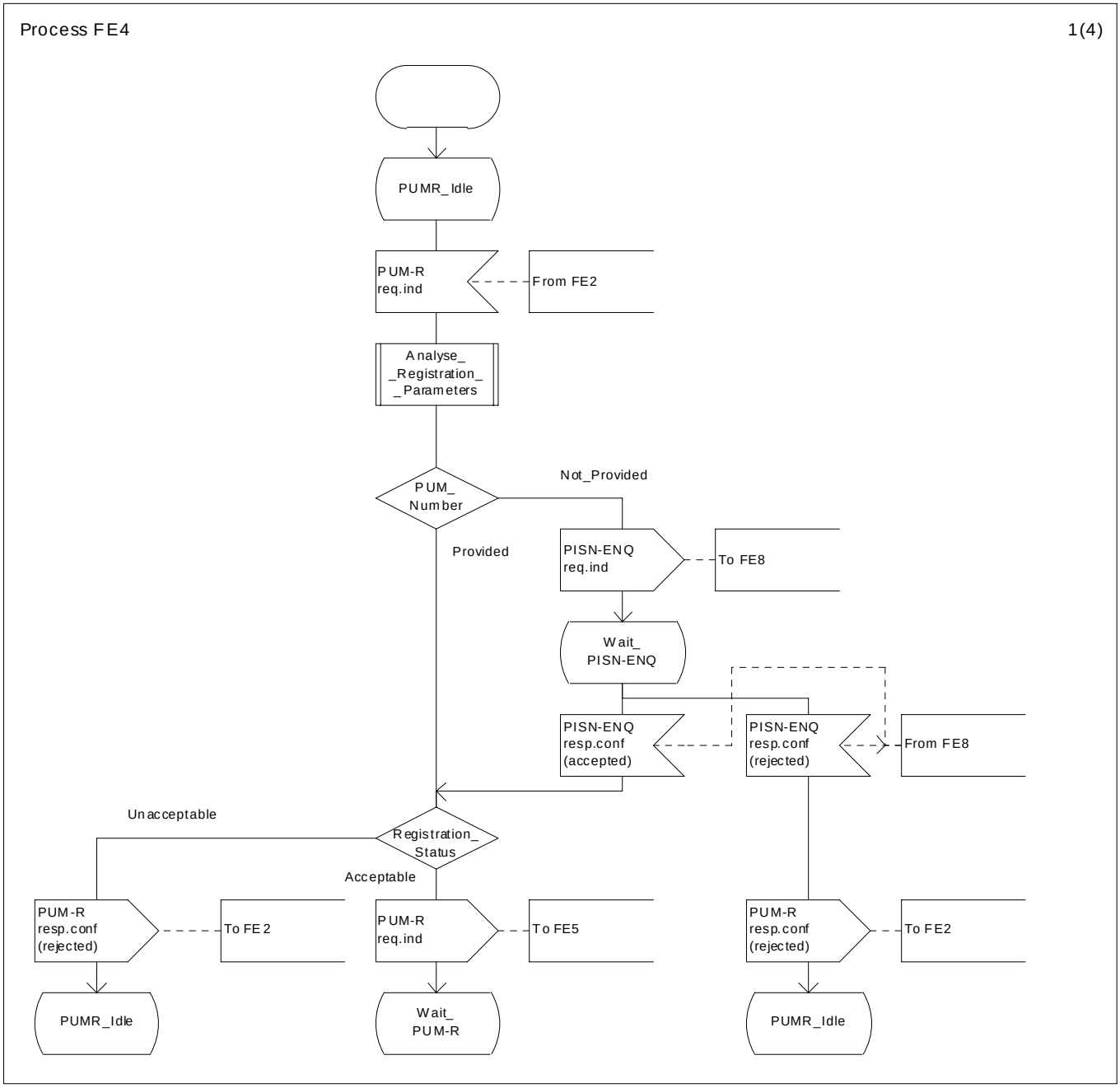

Figure 19 — SS-PUMR, SDL for FE4 - Part 1 of 4

© ISO/IEC 2000 – All rights reserved

Copyright International Organization for Standardization
Provided by IHS under license with ISO
No reproduction or networking permitted without license from IHS
Not for Resale

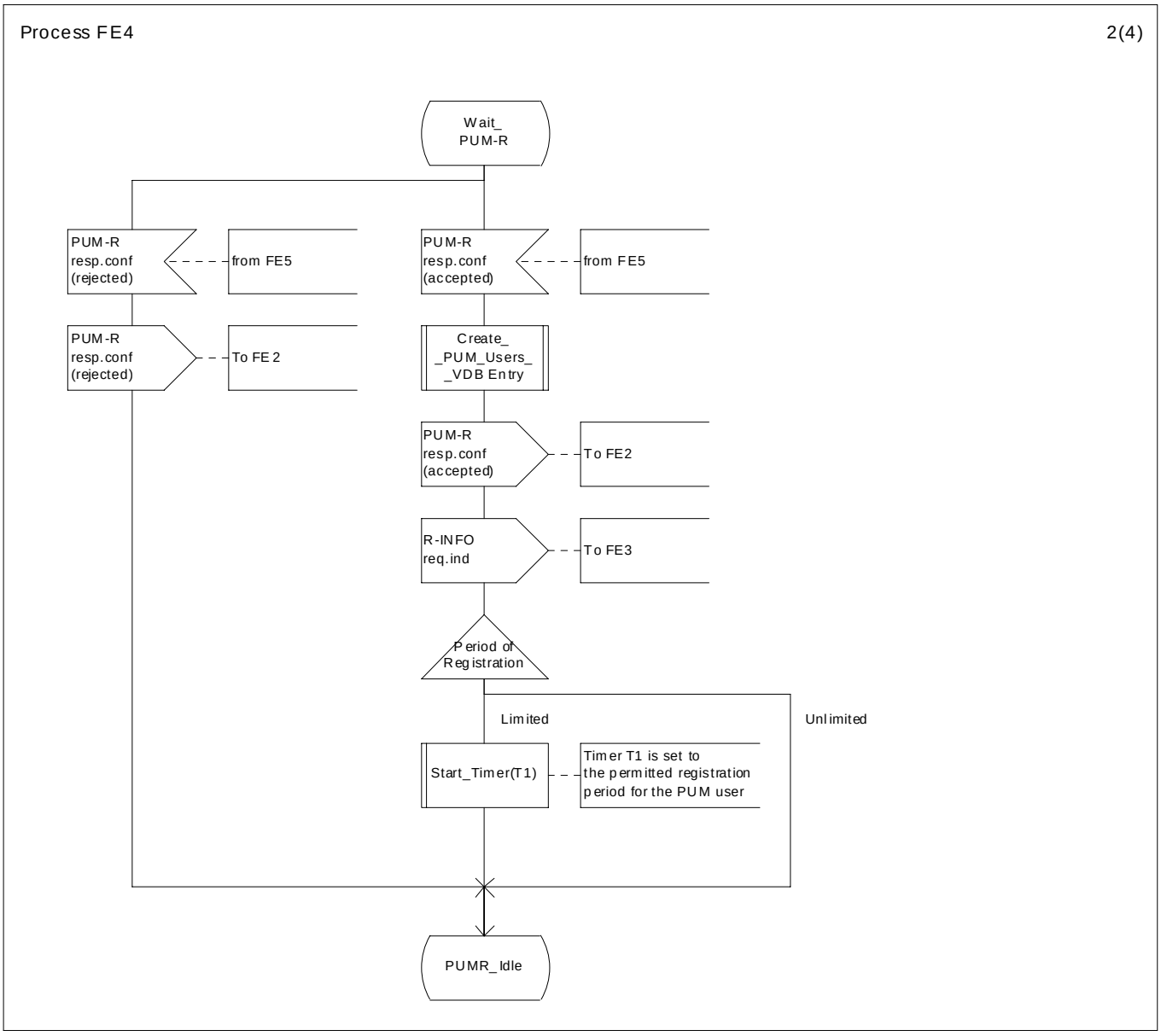

Figure 19 — SS-PUMR, SDL for FE4 - Part 2 of 4

© ISO/IEC 2000 – All rights reserved
Copyright International Organization for Standardization
Provided by IHS under license with ISO
No reproduction or networking permitted without license from IHS
Not for Resale

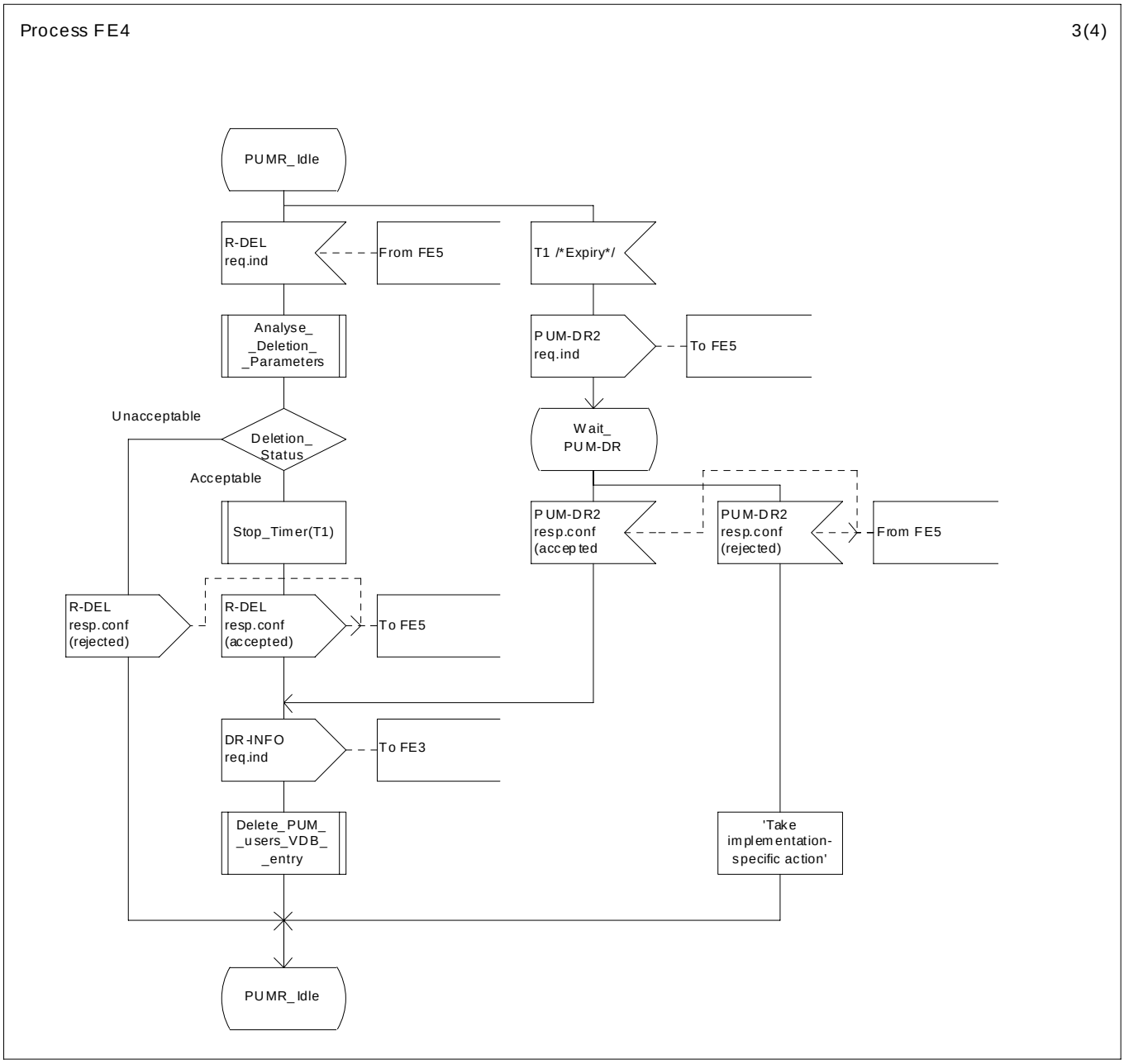

Figure 19 — SS-PUMR, SDL for FE4 - Part 3 of 4

© ISO/IEC 2000 – All rights reserved
Copyright International Organization for Standardization
Provided by IHS under license with ISO
No reproduction or networking permitted without license from IHS
Not for Resale

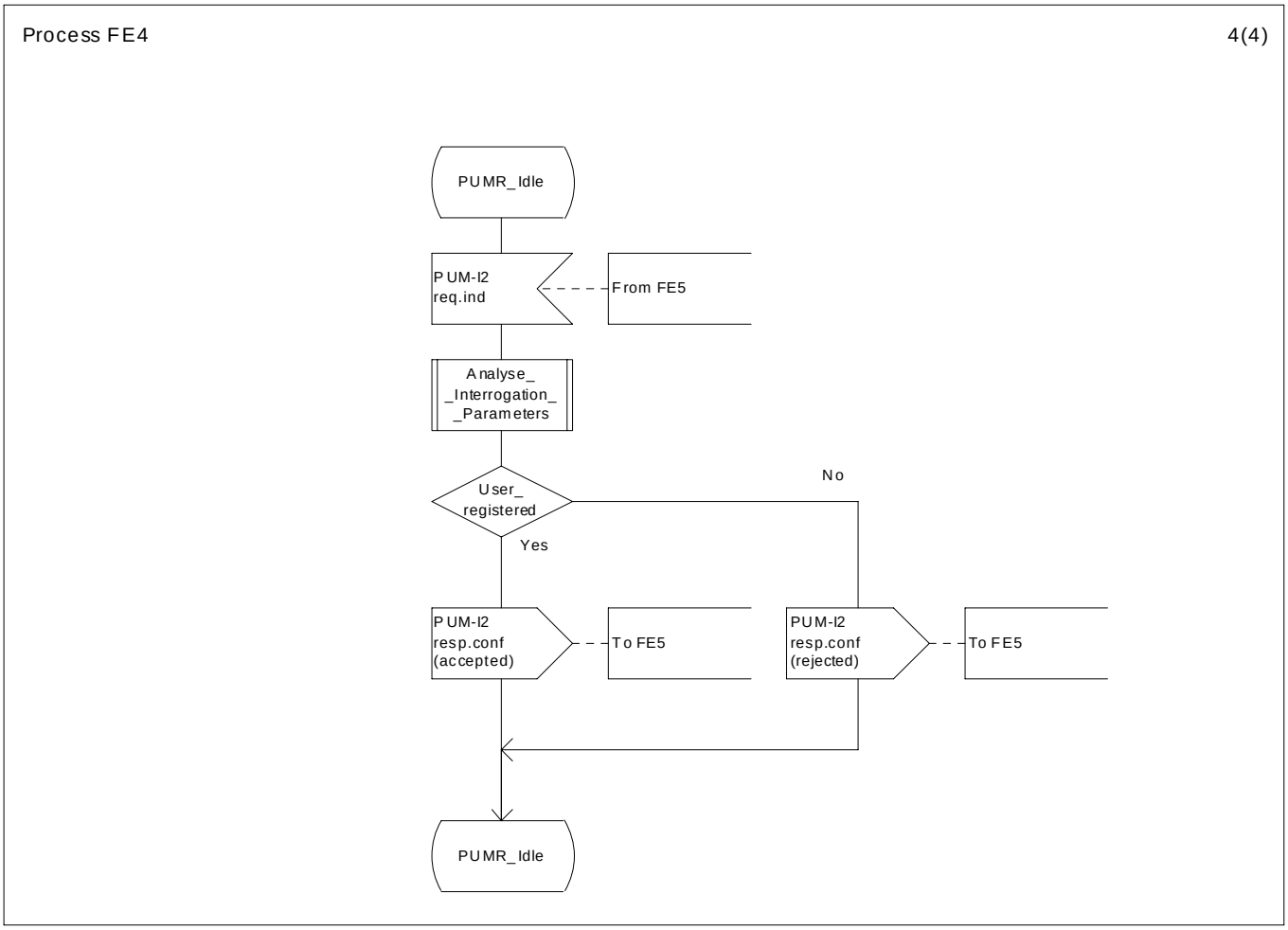

Figure 19 — SS-PUMR, SDL for FE4 - Part 4 of 4

© ISO/IEC 2000 – All rights reserved
Copyright International Organization for Standardization
Provided by IHS under license with ISO
No reproduction or networking permitted without license from IHS
Not for Resale

7.4.5 Behaviour of FE5

Figure 20 shows the behaviour of FE5.

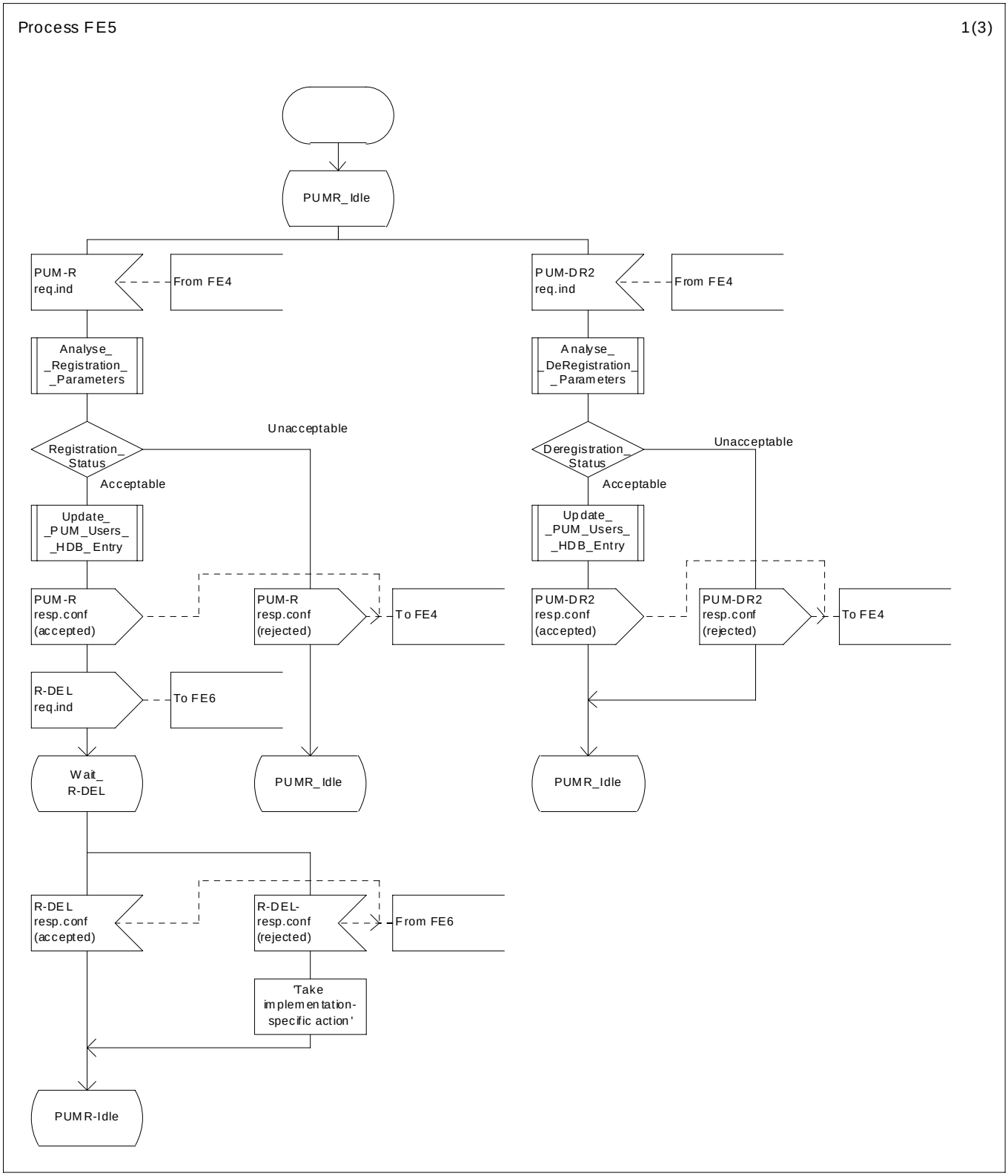

Figure 20 — SS-PUMR, SDL for FE5 - Part 1 of 3

--`,,```,,,,````-`-`,,`,,`,`,,`---

© ISO/IEC 2000 – All rights reserved

Copyright International Organization for Standardization
Provided by IHS under license with ISO
No reproduction or networking permitted without license from IHS
Not for Resale

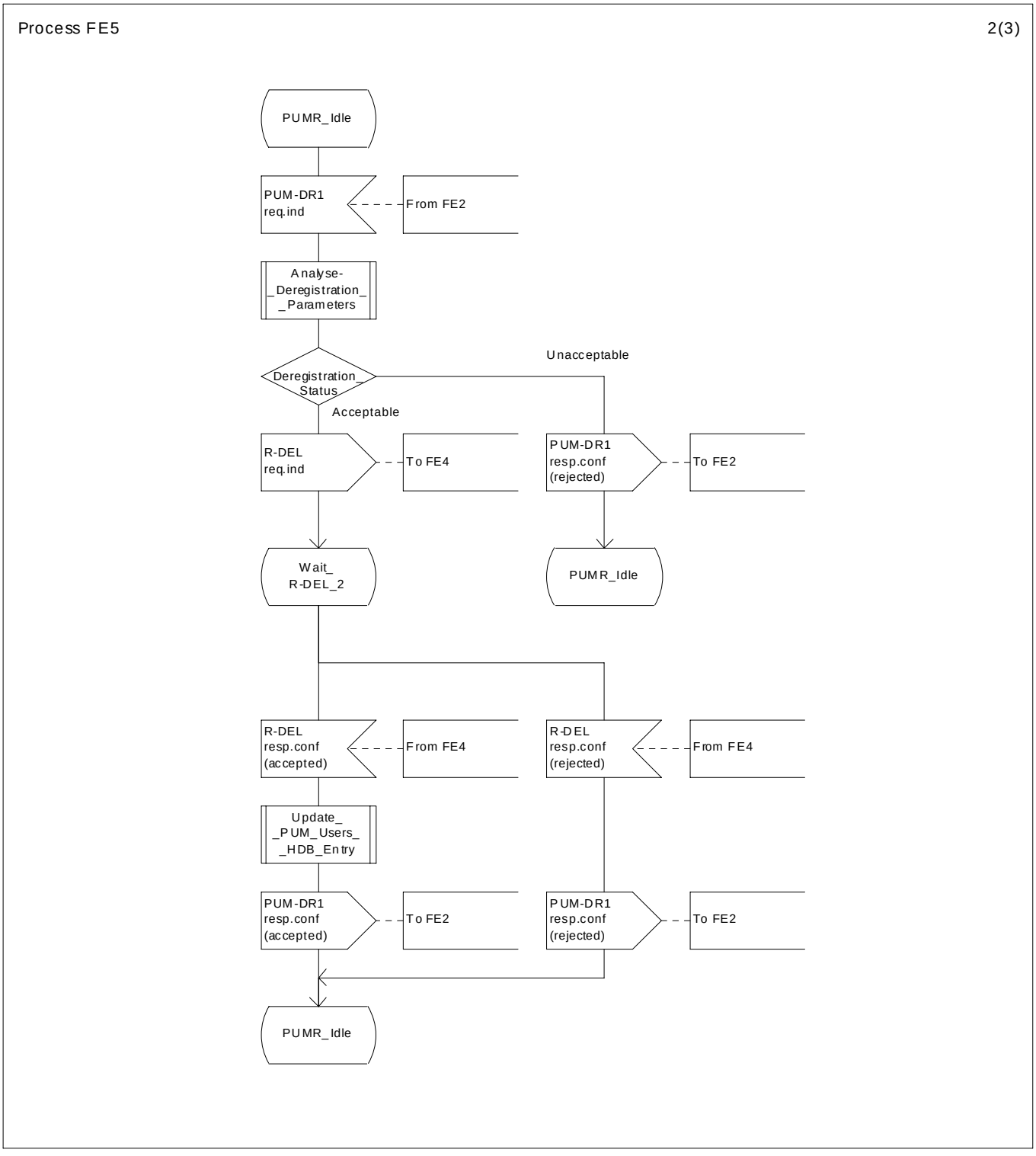

Figure 20 — SS-PUMR, SDL for FE5 - Part 2 of 3

© ISO/IEC 2000 – All rights reserved
Copyright International Organization for Standardization
Provided by IHS under license with ISO
No reproduction or networking permitted without license from IHS
Not for Resale

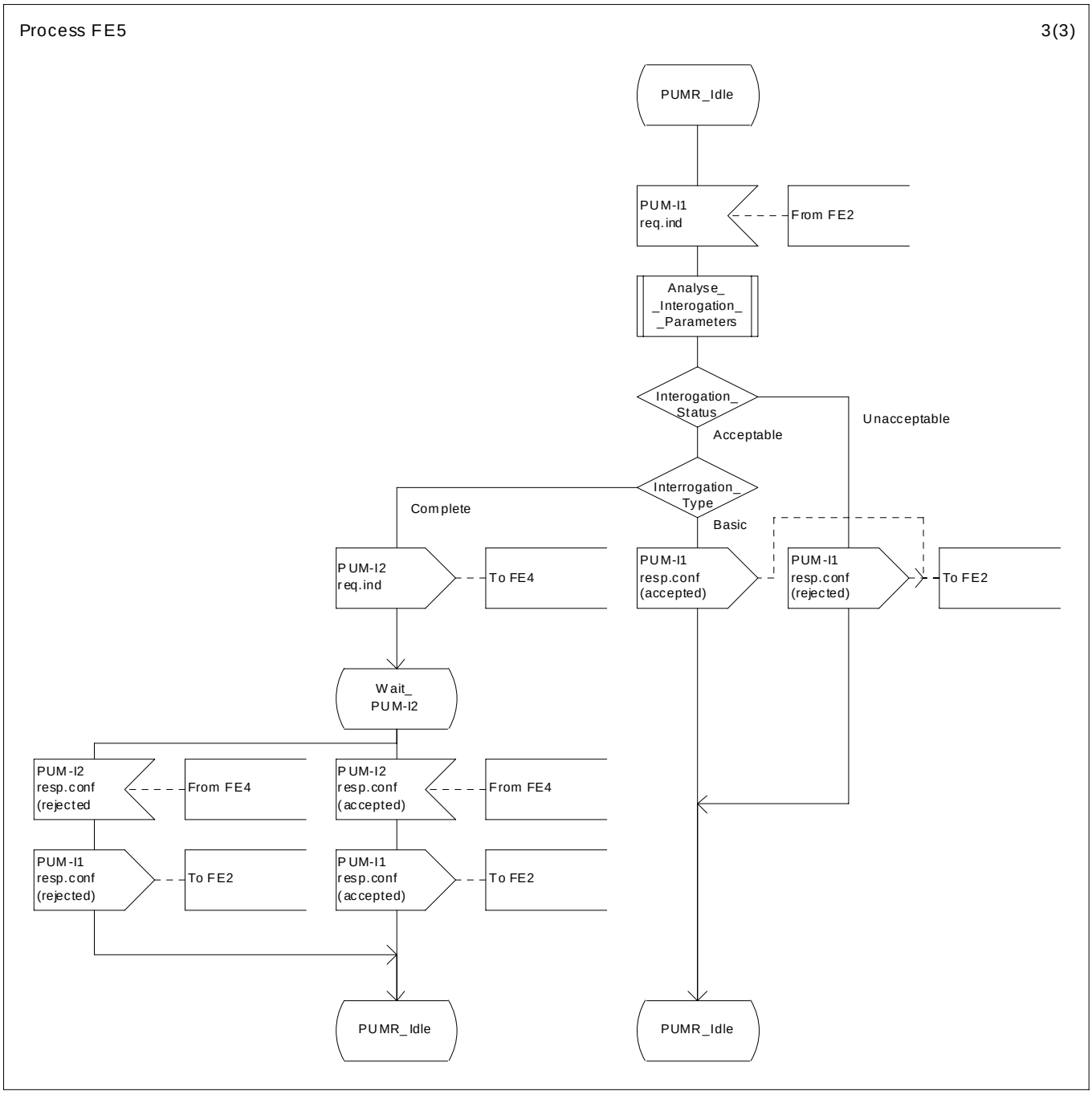

Figure 20 — SS-PUMR, SDL for FE5 - Part 3 of 3

--`,,```,,,,````-`-`,,`,,`,`,,`---
© ISO/IEC 2000 – All rights reserved
Copyright International Organization for Standardization
Provided by IHS under license with ISO
No reproduction or networking permitted without license from IHS
Not for Resale

7.4.6 Behaviour of FE6

Figure 21 shows the behaviour of FE6.

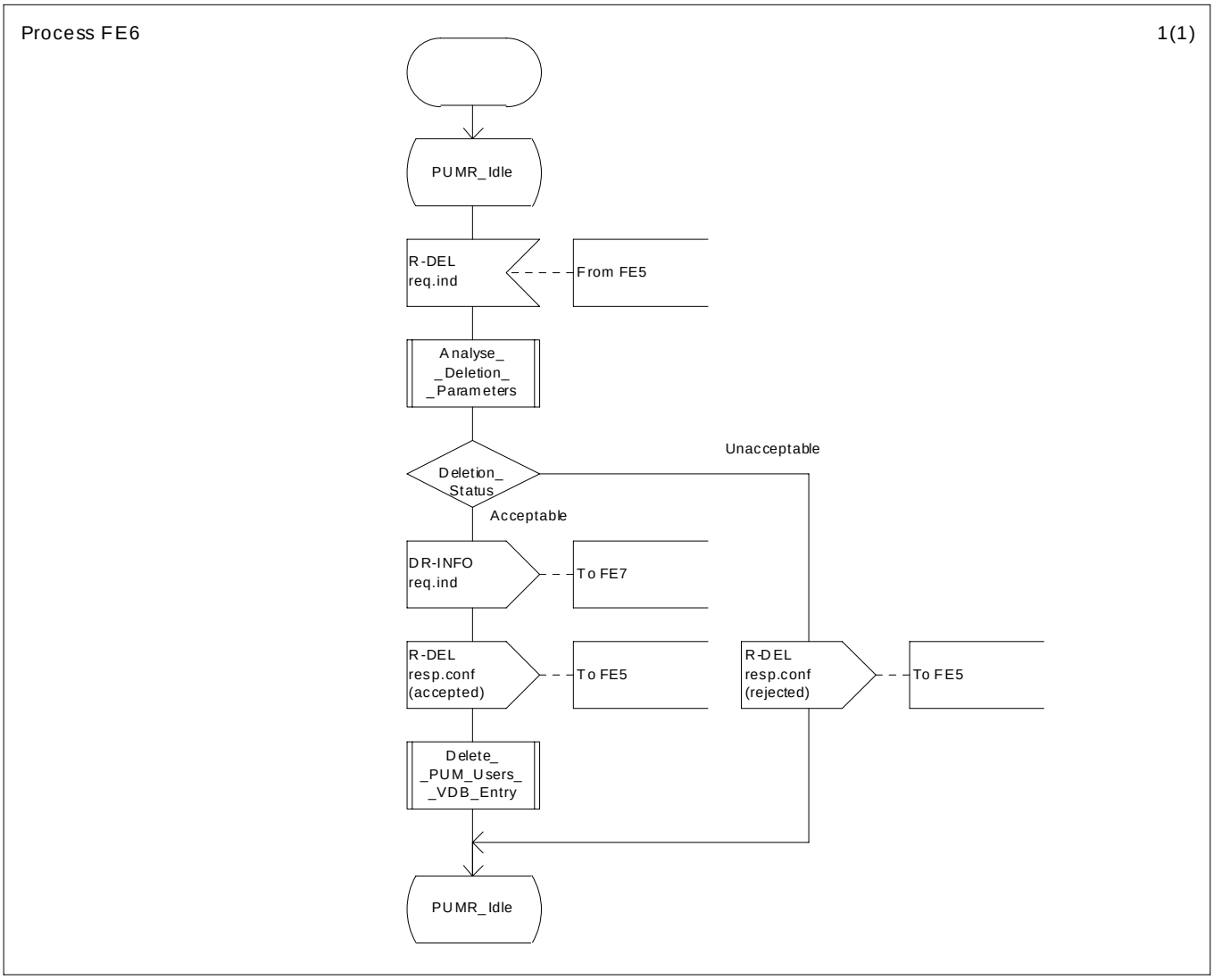

Figure 21 — SS-PUMR, SDL for FE6

© ISO/IEC 2000 – All rights reserved
Copyright International Organization for Standardization
Provided by IHS under license with ISO
No reproduction or networking permitted without license from IHS
Not for Resale

7.4.7 Behaviour of FE7

Figure 22 shows the behaviour of FE7.

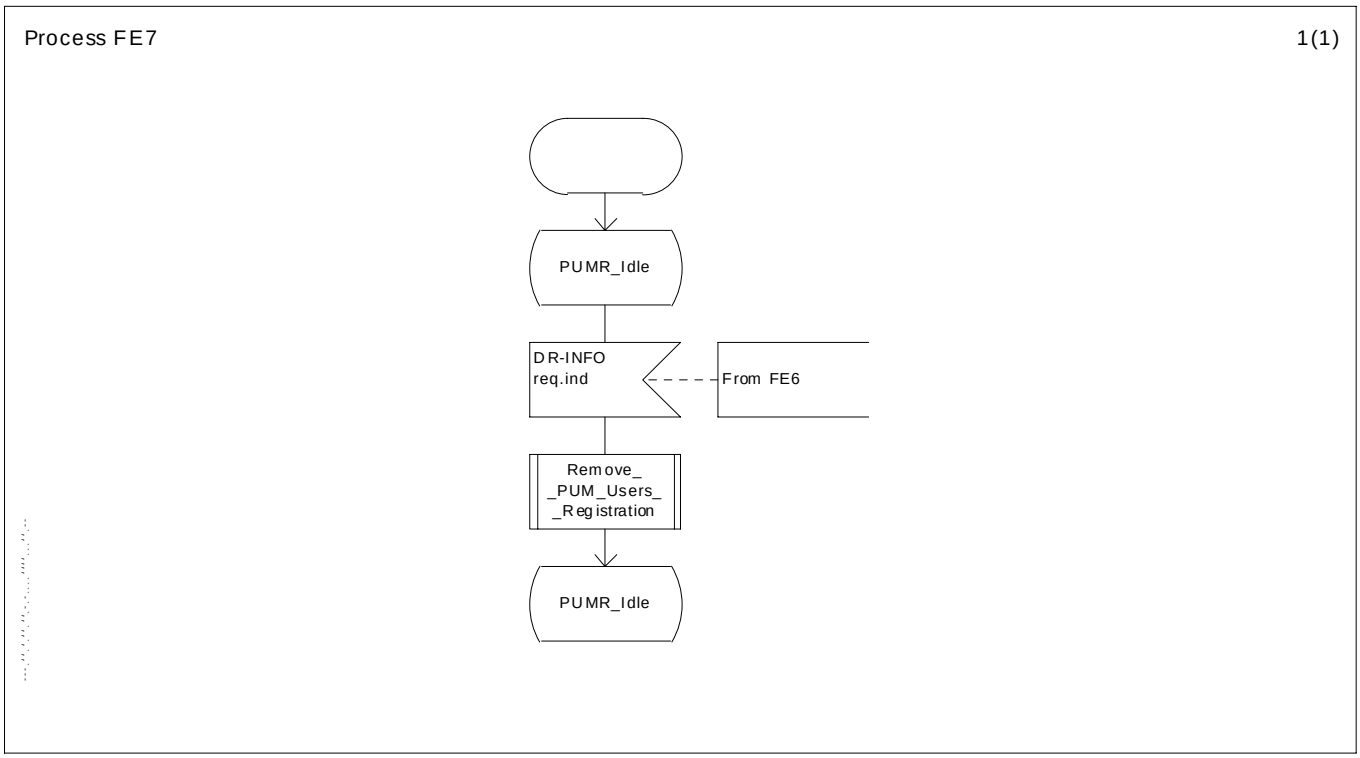

Figure 22 — SS-PUMR, SDL for FE7

© ISO/IEC 2000 – All rights reserved

Copyright International Organization for Standardization
Provided by IHS under license with ISO
No reproduction or networking permitted without license from IHS
Not for Resale

7.4.8 Behaviour of FE8

Figure 23 shows the behaviour of FE8.

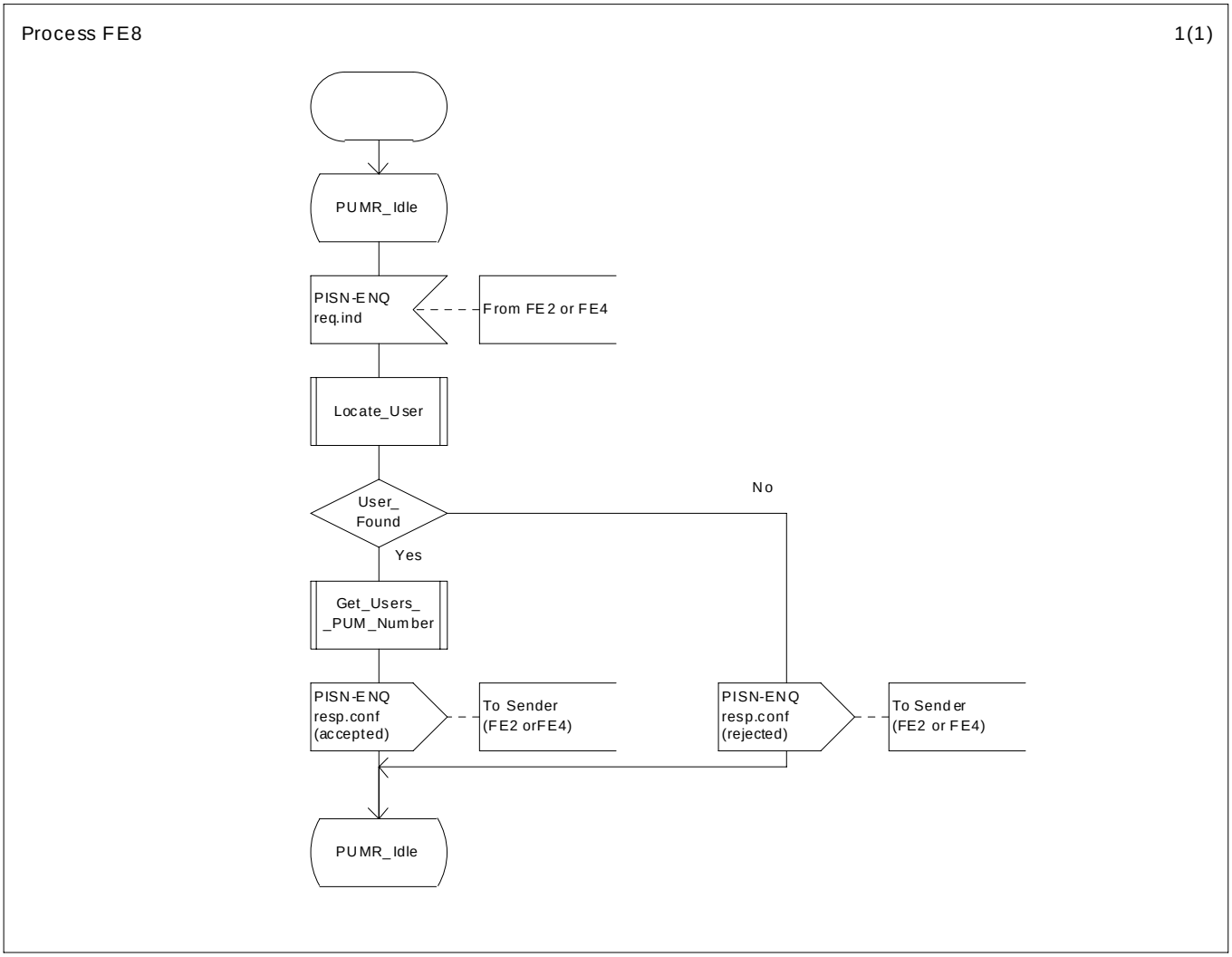

Figure 23 — SS-PUMR, SDL for FE8

© ISO/IEC 2000 – All rights reserved
Copyright International Organization for Standardization
Provided by IHS under license with ISO
No reproduction or networking permitted without license from IHS
Not for Resale

7.5 Allocation of Functional Entities to physical equipment

Table 12 shows the allocation of Functional Entities to physical equipment.

For the purposes of this table, a Remote PINX denotes a PINX where a remote SS-PUMR invocation is performed.

Table 12 — Scenarios for the allocation of FEs to physical equipment

Scenario	**FE1** (NOTE 30)	**FE2**	**FE3** (NOTE 31)	**FE4**	**FE5**	**FE6**	**FE7**	**FE8**
1	Visitor PINX	Visitor PINX	Visitor PINX	Visitor PINX	Home PINX	Old Visitor PINX	Old Visitor PINX	Directory PINX
2	Remote PINX	Visitor PINX	Visitor PINX	Visitor PINX	Home PINX	Old Visitor PINX	Old Visitor PINX	Directory PINX
3	Visitor PINX	Home PINX	Visitor PINX	Visitor PINX	Home PINX	Old Visitor PINX	Old Visitor PINX	Directory PINX
4	Remote PINX	Home PINX	Visitor PINX	Visitor PINX	Home PINX	Old Visitor PINX	Old Visitor PINX	Directory PINX
5 (NOTE 32)	Old Visitor PINX	any PINX	Visitor PINX	Visitor PINX	Home PINX	Old Visitor PINX	Old Visitor PINX	Directory PINX
6 (NOTE 33)	Remote PINX	any PINX	Visitor PINX	Visitor PINX	Home PINX	Old Visitor PINX	Old Visitor PINX	Directory PINX

NOTE 30 - As specified, FE1 cannot reside in a TE. This does not prevent an implementation from putting a proprietary "service initiating function" into a TE, if appropriate. Since such a terminal-specific function communicates with FE1 exclusively via a terminal interface, it is however outside the scope of this International Standard.

NOTE 31 - If the corresponding user's TE is functional with respect to PUMR, this FE may reside in the TE.

NOTE 32 - This scenario arises only in PISNs which support WTM. It relates to the case of an automatic PUM re-registration when the hosting terminal is a roaming WT.

NOTE 33 - This scenario arises only in PISNs which support WTM. It relates to the case of a remote PUM registration when the hosting terminal is a WT.

7.6 Interworking considerations

Not applicable.

© ISO/IEC 2000 – All rights reserved

Copyright International Organization for Standardization
Provided by IHS under license with ISO
No reproduction or networking permitted without license from IHS
Not for Resale

ICS 33.040.35

Price based on 43 pages

© ISO/IEC 2000 – All rights reserved

--`,,```,,,,````-`-`,,`,,`,`,,`---

Copyright International Organization for Standardization
Provided by IHS under license with ISO
No reproduction or networking permitted without license from IHS

Not for Resale