INTERNATIONAL STANDARD

ISO/IEC 17594

First edition
2004-07-15

Information technology — Cases for 120 mm and 80 mm DVD-RAM disks

Technologies de l'information — Coffrets pour disques DVD-RAM de 120 mm et 80 mm

Reference number
ISO/IEC 17594:2004(E)

© ISO/IEC 2004

Copyright International Organization for Standardization
Reproduced by IHS under license with ISO
No reproduction or networking permitted without license from IHS

Not for Resale

PDF disclaimer

This PDF file may contain embedded typefaces. In accordance with Adobe's licensing policy, this file may be printed or viewed but shall not be edited unless the typefaces which are embedded are licensed to and installed on the computer performing the editing. In downloading this file, parties accept therein the responsibility of not infringing Adobe's licensing policy. The ISO Central Secretariat accepts no liability in this area.

Adobe is a trademark of Adobe Systems Incorporated.

Details of the software products used to create this PDF file can be found in the General Info relative to the file; the PDF-creation parameters were optimized for printing. Every care has been taken to ensure that the file is suitable for use by ISO member bodies. In the unlikely event that a problem relating to it is found, please inform the Central Secretariat at the address given below.

© ISO/IEC 2004

All rights reserved. Unless otherwise specified, no part of this publication may be reproduced or utilized in any form or by any means, electronic or mechanical, including photocopying and microfilm, without permission in writing from either ISO at the address below or ISO's member body in the country of the requester.

ISO copyright office
Case postale 56 • CH-1211 Geneva 20
Tel. + 41 22 749 01 11
Fax + 41 22 749 09 47
E-mail copyright@iso.org
Web www.iso.org

Published in Switzerland

Copyright International Organization for Standardization
Reproduced by IHS under license with ISO
No reproduction or networking permitted without license from IHS

Not for Resale

© ISO/IEC 2004 – All rights reserved

Contents

Page

Section 1 - General 1

1 Scope 1

2 Conformance 1

3 Normative references 2

4 Definitions 2

5 Conventions and notations 2
5.1 Representation of numbers 2
5.2 Names 2

6 General description of the case 2
6.1 General description of the Type 1 case (Figure 1) 2
6.2 General description of the Type 2 case (Figure 2) 2
6.3 General description of the Type 3 case (Figure 2) 3
6.4 General description of the Type 4 case (Figure 3) 4
6.5 General description of the Type 5 case (Figure 3) 4
6.6 General description of the Type 6 case (Figure 4) 5
6.7 General description of the Type 7 case (Figure 5) 5
6.8 General description of the Type 8 case (Figure 4) 6
6.9 General description of the Type 9 case (Figure 5) 6

7 General requirements 7
7.1 Environments 7
7.1.1 Test environment 7
7.1.2 Operating environment 7
7.1.3 Storage environment 8
7.1.4 Transportation 8
7.2 Temperature shock 8
7.3 Safety requirement 8
7.4 Flammability 8

Section 2 - Dimensional and mechanical characteristics of the case for 120 mm disks 9

8 Dimensional characteristics 9
8.1 Dimensions of the Type 1 case 9
8.1.1 Overall dimensions (Figure 6) 9
8.1.2 Location hole (Figure 6) 10
8.1.3 Alignment hole (Figure 6) 10
8.1.4 Reference surfaces (Figure 7) 11
8.1.5 Insertion slots (Figure 8) 11
8.1.6 Detents (Figure 8) 12
8.1.7 Gripper slots (Figure 8) 12
8.1.8 Write-inhibit hole (Figure 9) 13
8.1.9 Sensor holes (Figure 9) 13
8.1.10 Sensing areas (Figure 9) 14
8.1.11 Spindle and head window (Figure 10) 14
8.1.12 Shutter shape (Figure 11) 15
8.1.13 Path for shutter opener (Figures 12 and 13) 15
8.1.14 Label areas (Figure 14) 16
8.1.15 Identification marks for Sides A and B (Figure 15) 16
8.2 Dimensions of the Type 2 case 28
8.2.1 Overall dimensions (Figure 16) 28
8.2.2 Location hole (Figure 16) 29

© ISO/IEC 2004 All rights reserved

Copyright International Organization for Standardization
Reproduced by IHS under license with ISO
No reproduction or networking permitted without license from IHS
Not for Resale

8.2.3 Alignment hole (Figure 16) 29
8.2.4 Reference surfaces (Figure 17) 29
8.2.5 Insertion slot (Figure 18) 30
8.2.6 Detents (Figure 18) 30
8.2.7 Gripper slots (Figure 18) 31
8.2.8 Write-inhibit hole (Figure 19) 31
8.2.9 Sensor holes (Figure 19) 32
8.2.10 Sensing areas (Figure 19) 32
8.2.11 Spindle and head window (Figure 20) 33
8.2.12 Shutter shape (Figure 21) 33
8.2.13 Path for shutter opener (Figure 22 and 23) 34
8.2.14 Label areas (Figure 24) 35
8.2.15 Identification mark for Side A (Figure 25) 35
8.2.16 Opening and opening cover for taking the disk out of the case 35
8.3 Dimensions of the Type 3 case 45
8.3.1 Sensor holes 45
8.3.2 Opening and opening cover for taking the disk out of the case 46
8.4 Dimensions of the Type 4 case 46
8.4.1 Sensor holes 46
8.4.2 Opening and opening cover for taking the disk out of the case 46
8.5 Dimensions of the Type 5 case 47
8.5.1 Sensor holes 47
8.5.2 Opening and opening cover for taking the disk out of the case 47

9 Mechanical characteristics 47
9.1 Material 47
9.2 Mass 47
9.3 Edge distortion 47
9.4 Compliance 47
9.5 Shutter opening force 47

10 Interface between the case used as cartridge and a drive 48
10.1 Capture cylinder (Figure 26) 48
10.2 Inner dimensions of the case (Figure 27) 49

11 Orientation of the disk in the case 50
11.1 Two-sided disk (Type 2S) in case Types 1, 4 and 5 50
11.2 One-sided disk (Type 1S) in case Types 1, 2 and 3 50

Section 3 - Dimensional and Mechanical characteristics of the case for 80 mm disk 52

12 Dimensional characteristics 52
12.1 Dimensions of the Type 6 case 52
12.1.1 Overall dimensions (Figure 28) 52
12.1.2 Location hole (Figure 28) 53
12.1.3 Alignment hole (Figure 28) 53
12.1.4 Reference surfaces (Figure 29) 54
12.1.5 Mis-insertion protection slots (Figure 30) 54
12.1.6 Detents (Figure 30) 54
12.1.7 Write-inhibit hole (Figure 31) 55
12.1.8 Sensor holes (Figure 31) 56
12.1.9 Spindle and head window (Figure 32) 56
12.1.10 Shutter shape (Figure 33) 57
12.1.11 Path for shutter opener (Figure 34) 58
12.1.12 Label areas (Figure 35) 59
12.1.13 Identification marks for Sides A and B (Figure 36) 59
12.1.14 Disk holder and body (Figures 37 and 38) 60
12.2 Dimensions of the Type 7 case 74
12.2.1 Overall dimensions (Figure 39) 74
12.2.2 Location hole (Figure 40) 74
12.2.3 Alignment hole (Figure 40) 75
12.2.4 Reference surfaces (Figure 40) 75

Copyright International Organization for Standardization
Reproduced by IHS under license with ISO
No reproduction or networking permitted without license from IHS
Not for Resale
© ISO/IEC 2004 – All rights reserved

12.2.5 Mis-insertion protection slots (Figure 41) 76
12.2.6 Detents (Figure 41) 76
12.2.7 Write-inhibit hole (Figure 42) 77
12.2.8 Sensor holes (Figure 42) 77
12.2.9 Spindle and head window (Figure 43) 78
12.2.10 Shutter shape (Figure 44) 79
12.2.11 Path for shutter opener (Figure 45) 80
12.2.12 Label areas (Figure 46) 81
12.2.13 Identification marks for Sides A and B (Figure 47) 81
12.2.14 Disk holder and body (Figure 48) 82
12.3 Dimensions of the Type 8 case 96
12.3.1 Sensor holes 96
12.3.2 Disk holder and body 96
12.4 Dimensions of the Type 9 case 96
12.4.1 Sensor holes 96
12.4.2 Disk holder and body 97

13 Mechanical characteristics 97
13.1 Material 97
13.2 Mass 97
13.3 Edge distortion 97
13.4 Compliance 97
13.5 Shutter opening force 97

14 Interface between the case used as cartridge and a drive 97
14.1 Capture cylinder (Figure 50) 97
14.2 Inner dimensions of the case (Figure 51) 97

15 Orientation of the disk in the case 98
15.1 Two-sided disk (Type 2S) in case Types 6 and 8 98
15.2 One-sided disk (Type 1S) in case Types 7 and 9 98

Annex A (normative) **Position of the case for 120 mm disk relative to the Reference Planes** 101

Annex B (normative) **Edge distortion test of the case for 120 mm disk** 102

Annex C (normative) **Compliance test of the case for 120 mm disk** 104

Annex D (normative) **Position of the case for 80 mm disk relative to the Reference Planes** 106

Annex E (normative) **Edge distortion test of the case for 80 mm disk** 107

Annex F (normative) **Compliance test of the case for 80 mm disk** 109

Annex G (normative) **Shutter opening force test of the case for 80 mm disk** 111

Annex H (informative) **Examples of an opening cover for a Type 2 case, a Type 3 case, a Type 4 case or a Type 5 case** 112

Annex J (informative) **Connection between disk holder and body of the case for 80 mm disk** 114

Annex K (informative) **Transportation** 115

© ISO/IEC 2004 All rights reserved

Copyright International Organization for Standardization
Reproduced by IHS under license with ISO
No reproduction or networking permitted without license from IHS
Not for Resale

Foreword

ISO (the International Organization for Standardization) and IEC (the International Electrotechnical Commission) form the specialized system for worldwide standardization. National bodies that are members of ISO or IEC participate in the development of International Standards through technical committees established by the respective organization to deal with particular fields of technical activity. ISO and IEC technical committees collaborate in fields of mutual interest. Other international organizations, governmental and non-governmental, in liaison with ISO and IEC, also take part in the work. In the field of information technology, ISO and IEC have established a joint technical committee, ISO/IEC JTC 1.

International Standards are drafted in accordance with the rules given in the ISO/IEC Directives, Part 2.

The main task of the joint technical committee is to prepare International Standards. Draft International Standards adopted by the joint technical committee are circulated to national bodies for voting. Publication as an International Standard requires approval by at least 75 % of the national bodies casting a vote.

Attention is drawn to the possibility that some of the elements of this document may be the subject of patent rights. ISO and IEC shall not be held responsible for identifying any or all such patent rights.

ISO/IEC 17594 was prepared by Ecma International (as ECMA-331) and was adopted, under a special “fast-track procedure”, by Joint Technical Committee ISO/IEC JTC 1, *Information technology*, in parallel with its approval by national bodies of ISO and IEC.

© ISO/IEC 2004 – All rights reserved
Copyright International Organization for Standardization
Reproduced by IHS under license with ISO
No reproduction or networking permitted without license from IHS
Not for Resale

Information technology — Cases for 120 mm and 80 mm DVD-RAM disks

Section 1 - General

1 Scope

This International Standard specifies the characteristics of a case for use with the 120 mm and 80 mm DVD-RAM disks specified in International Standard ISO/IEC 17592. The present International Standard specifies nine related , but different implementations of this case, viz.

Type 1 A case for a one-sided (Type 1S) or a two-sided (Type 2S) 120 mm DVD-RAM disk such that the disk cannot be removed from the case. This case is reversible.

Type 2 A case for a one-sided (Type 1S) 120 mm DVD-RAM disk such that the disk may be removed from the case. This case is not reversible.

Type 3 A case into which a one-sided (Type 1S) or a two-sided (Type 2S) 120 mm DVD-RAM disk may be inserted, then used as a cartridge. This case is not reversible.

Type 4 A case for a two-sided (Type 2S) 120 mm DVD-RAM disk such that the disk may be removed from the case. This case is reversible.

Type 5 A case into which a one-sided (Type 1S) or a two-sided (Type 2S) 120 mm DVD-RAM disk may be inserted, then used as a cartridge. This case is reversible.

Type 6 A case for a two-sided (Type 2S) 80 mm DVD-RAM disk such that the disk may be removed from the case. This case is reversible.

Type 7 A case for a one-sided (Type 1S) 80 mm DVD-RAM disk such that the disk may be removed from the case. This case is not reversible.

Type 8 A case into which a two-sided (Type 2S) 80 mm DVD-RAM disk may be inserted, then used as a cartridge. This case is reversible.

Type 9 A case into which a one-sided (Type 1S) 80 mm DVD-RAM disk may be inserted, then used as a cartridge. This case is not reversible.

This International Standard specifies

- the environments in which the cases are to be operated and stored;
- the dimensional and mechanical characteristics of the case, so as to provide mechanical interchangeability between data processing systems;

This International Standard provides for mechanical interchange between optical disk drives. Together with International Standard ISO/IEC 17592 for 120 mm (4,7 Gbytes per side) and 80 mm (1,46 Gbytes per side) DVD-RAM disks and a standard for volume and file structure, it provides for full data interchange between data processing systems.

2 Conformance

A claim of conformance with this International Standard shall specify the Type implemented. A case shall be in conformance with this International Standard if it meets the mandatory requirements specified herein for its Type.

--`,,`,,`-`-`,,`,,`,`,,`---

© ISO/IEC 2004 All rights reserved

Copyright International Organization for Standardization
Reproduced by IHS under license with ISO
No reproduction or networking permitted without license from IHS
Not for Resale

3 Normative references

The following referenced documents are indispensable for the application of this document. For dated references, only the edition cited applies. For undated references, the latest edition of the referenced document (including any amendments) applies.

ISO/IEC 17592:2004, *Information technology — 120 mm (4,7 Gbytes per side) and 80 mm (1,46 Gbytes per side) DVD Rewritable Disk (DVD-RAM)*

ECMA-287:2002, *Safety of electronic equipment*

4 Definitions

For the purpose of this International Standard the following definitions apply:

4.1
cartridge
a device consisting of a case containing a rewritable disk

4.2
case
the housing for an optical disk, that protects the disk and facilitates disk interchange

5 Conventions and notations

5.1 Representation of numbers

A measured value is rounded off to the least significant digit of the corresponding specified value. For instance, it implies that a specified value of 1,26 with a positive tolerance of + 0,01 and a negative tolerance of - 0,02 allows a range of measured values from 1,235 to 1,275.

5.2 Names

The names of entities, e.g. specific sides, etc. are given a capital initial.

6 General description of the case

6.1 General description of the Type 1 case (Figure 1)

The case is a rigid protective container of rectangular shape. Sides A and B of the case are identical as far as the features given here are concerned. References to Sides A and B of the case can be changed to B or A, respectively. When the opening of the one is a head and spindle window for the spindle and the optical head of the drive, that of the other is an access window for the disk clamping apparatus. A shutter uncovers the windows upon insertion into the drive, and automatically covers them upon removal from the drive. The case has features that enable a drive to reject a mis-inserted cartridge, to inhibit writing, sensor holes, detents for autoloading and a vertical use, gripper slots for an autochanger, label areas and side identification marks.

Sides A and B of the case have the same configuration.

6.2 General description of the Type 2 case (Figure 2)

The Type 2 case has the same features as the Type 1 case, but with some differences. The shape of the case is different on Side A and on Side B. Side A does not need to have a location hole, an alignment hole, Reference Surfaces, a write-inhibit hole, sensor holes and sensing areas. The case has an opening closed by a cover. This cover can be opened. In open position, the disk can be taken out of the case. Sensor hole A1 is originally closed. If the disk has been removed from the case, then this hole remains permanently open,

--`,,`,,-`-`,,`,,`,`,,`---

© ISO/IEC 2004 – All rights reserved
Copyright International Organization for Standardization
Reproduced by IHS under license with ISO
No reproduction or networking permitted without license from IHS
Not for Resale

indicating that the original disk contained in the case has been removed at least once or has been replaced by another disk.

6.3 General description of the Type 3 case (Figure 2)

The Type 3 case is identical with Type 2 case except that the sensor hole A1 is always open.

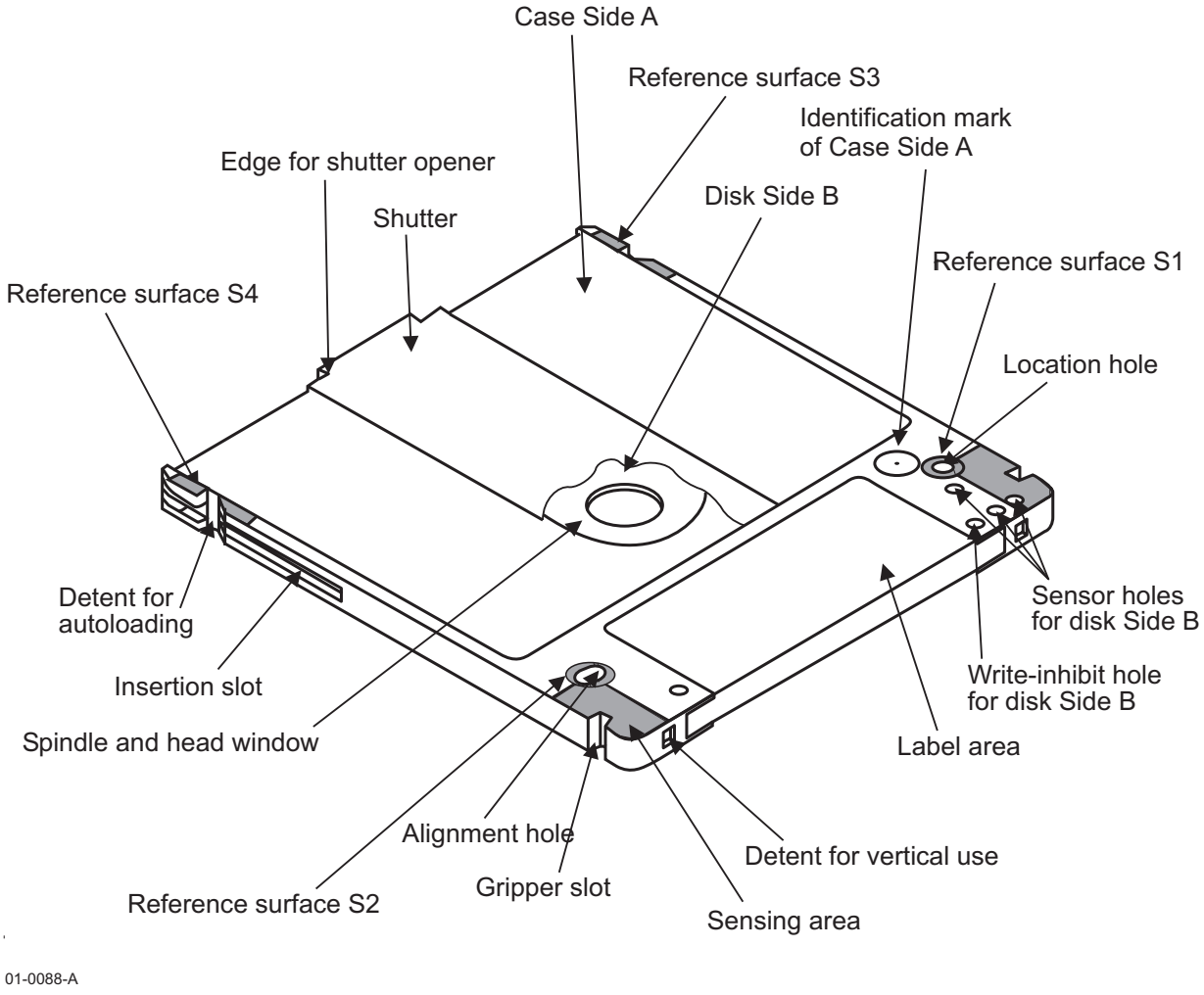

Figure 1 - General view of the Type 1 case, seen from Side A

Copyright International Organization for Standardization All rights reserved
Reproduced by IHS under license with ISO
No reproduction or networking permitted without license from IHS
Not for Resale

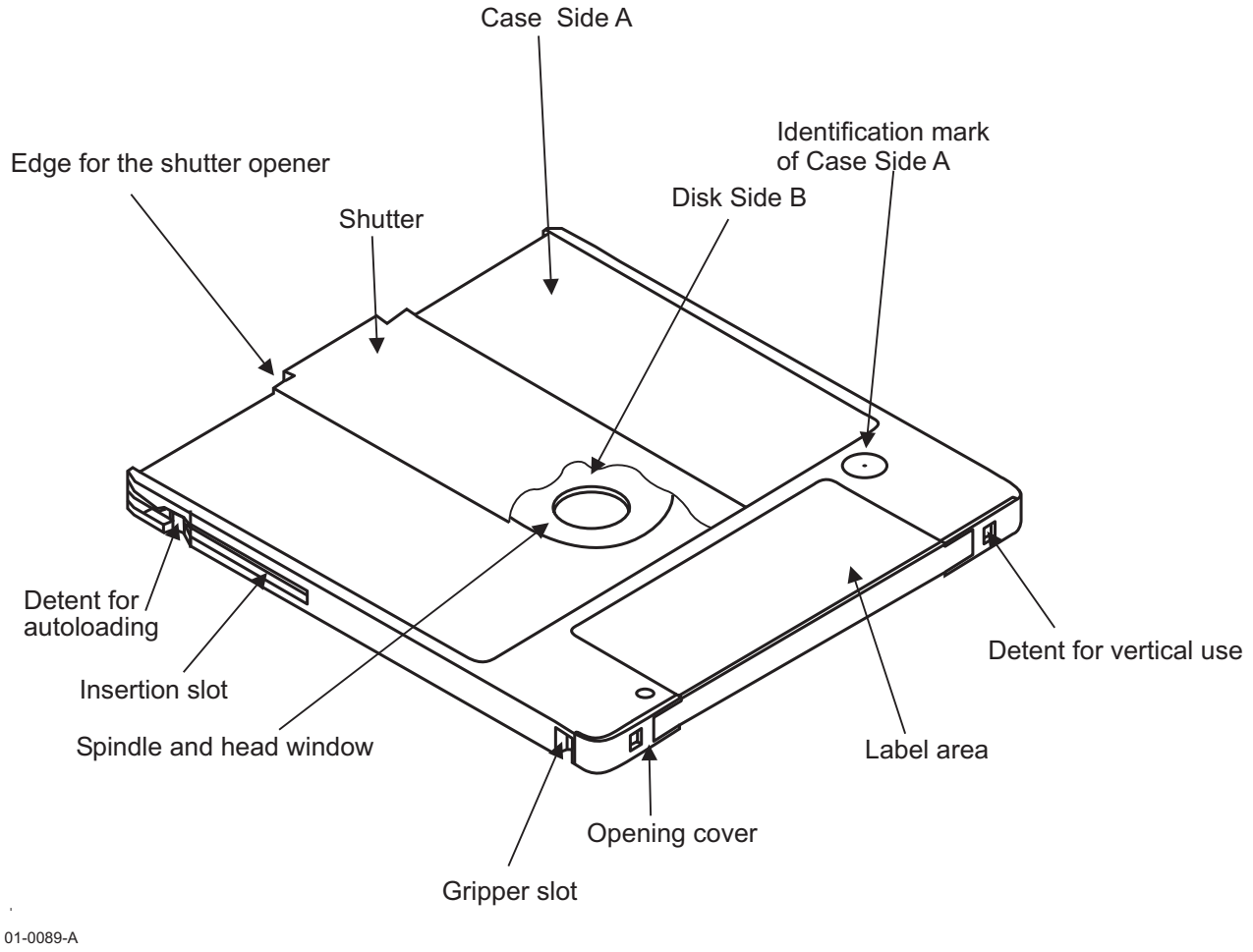

Figure 2 - General view of the Type 2 and Type 3 cases, seen from Side A

6.4 General description of the Type 4 case (Figure 3)

The Type 4 case has the same features as the Type 1 case, but with some differences. The case has an opening closed by a cover. This cover can be opened. In open position, the disk can be taken out of the case. If the disk has been removed from the case, then the sensor hole A1 and B1 remain permanently open, indicating that the original disk contained in the case has been removed at least once or has been replaced by another disk.

6.5 General description of the Type 5 case (Figure 3)

The Type 5 case is identical with Type 4 case except that the sensor hole A1 and B1 are always open.

--`,,`-`-`,,`,,`,`,,`---
Copyright International Organization for Standardization
Reproduced by IHS under license with ISO
No reproduction or networking permitted without license from IHS
© ISO/IEC 2004 – All rights reserved
Not for Resale

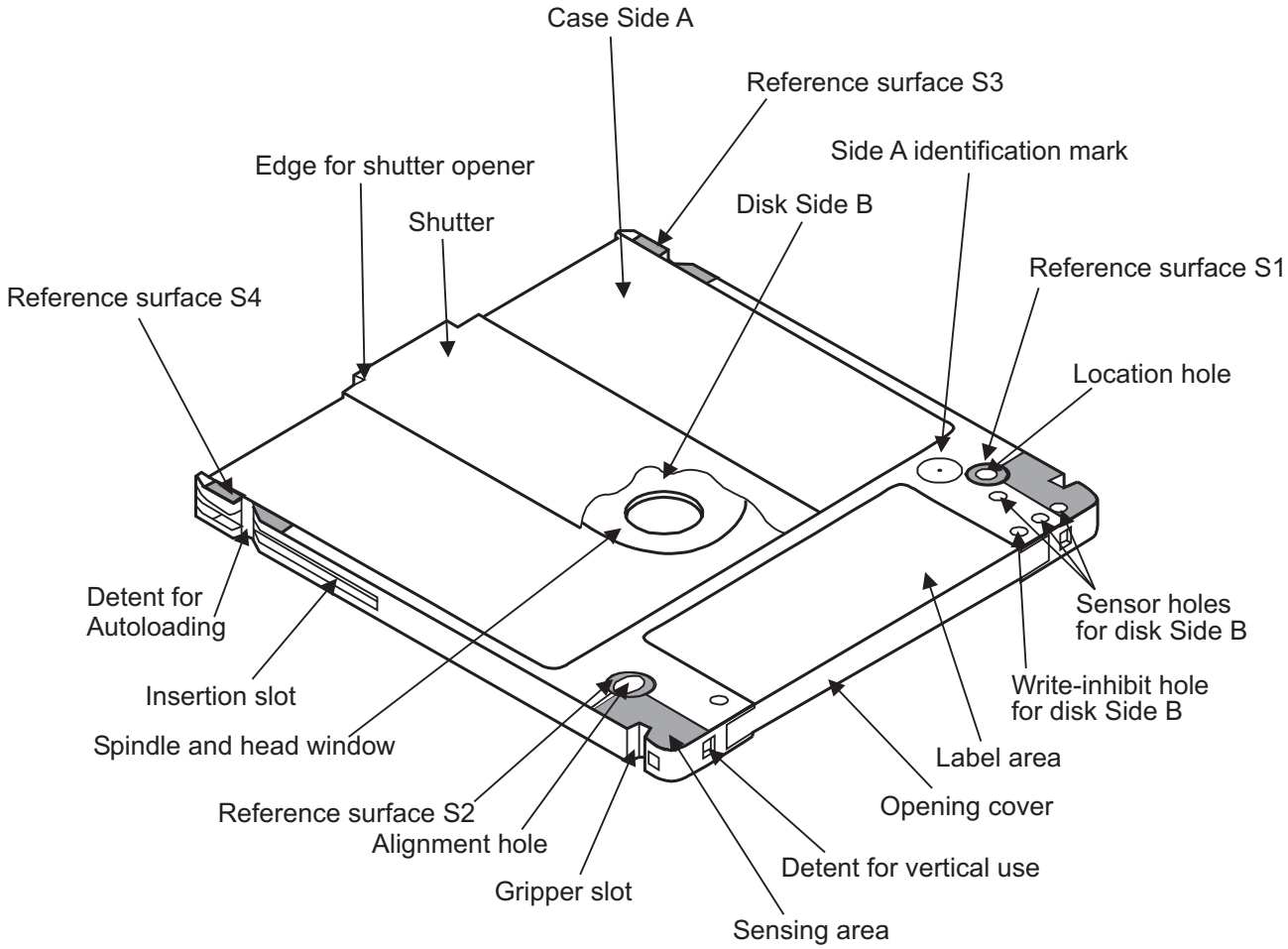

Figure 3 - General view of the Type 4 and Type 5 cases, seen from Side A

6.6 General description of the Type 6 case (Figure 4)

The case is a rigid protective container of rectangular shape. It consists of a body and a disk holder. This disk holder can be taken out of the body and then the disk can be taken out of the case. Sensor hole A1 and B1 are originally closed. If the disk holder has been taken out of the body, then these holes remain permanently open, indicating that the original disk contained in the case has been removed at least once or has been replaced by another disk. Sides A and B of the case are identical as far as the features given here are concerned. References to Sides A and B of the case can be changed to B or A, respectively. When the opening of the one is a head and spindle window for the spindle and the optical head of the drive, that of the other is an access window for the disk clamping apparatus. A shutter uncovers the windows upon insertion into the drive, and automatically covers them upon removal from the drive. The case has features that enable a drive to reject a mis-inserted cartridge, to inhibit writing, sensor holes, detents for autoloading and a vertical use, gripper slots for an autochanger, label areas and side identification marks.

Sides A and B of the case have the same configuration.

6.7 General description of the Type 7 case (Figure 5)

The Type 7 case has the same features as the Type 6 case, but with some differences. The shape of the case is different on Side A and on Side B. Side A does not need to have a location hole, an alignment hole, Reference Surfaces, a write-inhibit hole, sensor holes and sensing areas. Sensor hole A1 is originally closed. If the disk holder has been taken out of the body, then this hole remains permanently open, indicating that the

--`,,`-`-`,,`,,`,`,,`---
© ISO/IEC 2004 All rights reserved
Copyright International Organization for Standardization
Reproduced by IHS under license with ISO
No reproduction or networking permitted without license from IHS
Not for Resale

original disk contained in the case has been removed at least once or has been replaced by another disk. Side B of this case shall not have label area.

6.8 General description of the Type 8 case (Figure 4)

The Type 8 case is identical with Type 6 case except that the sensor hole A1 and B1 are always open.

6.9 General description of the Type 9 case (Figure 5)

The Type 9 case is identical with Type 7 case except that the sensor hole A1 is always open.

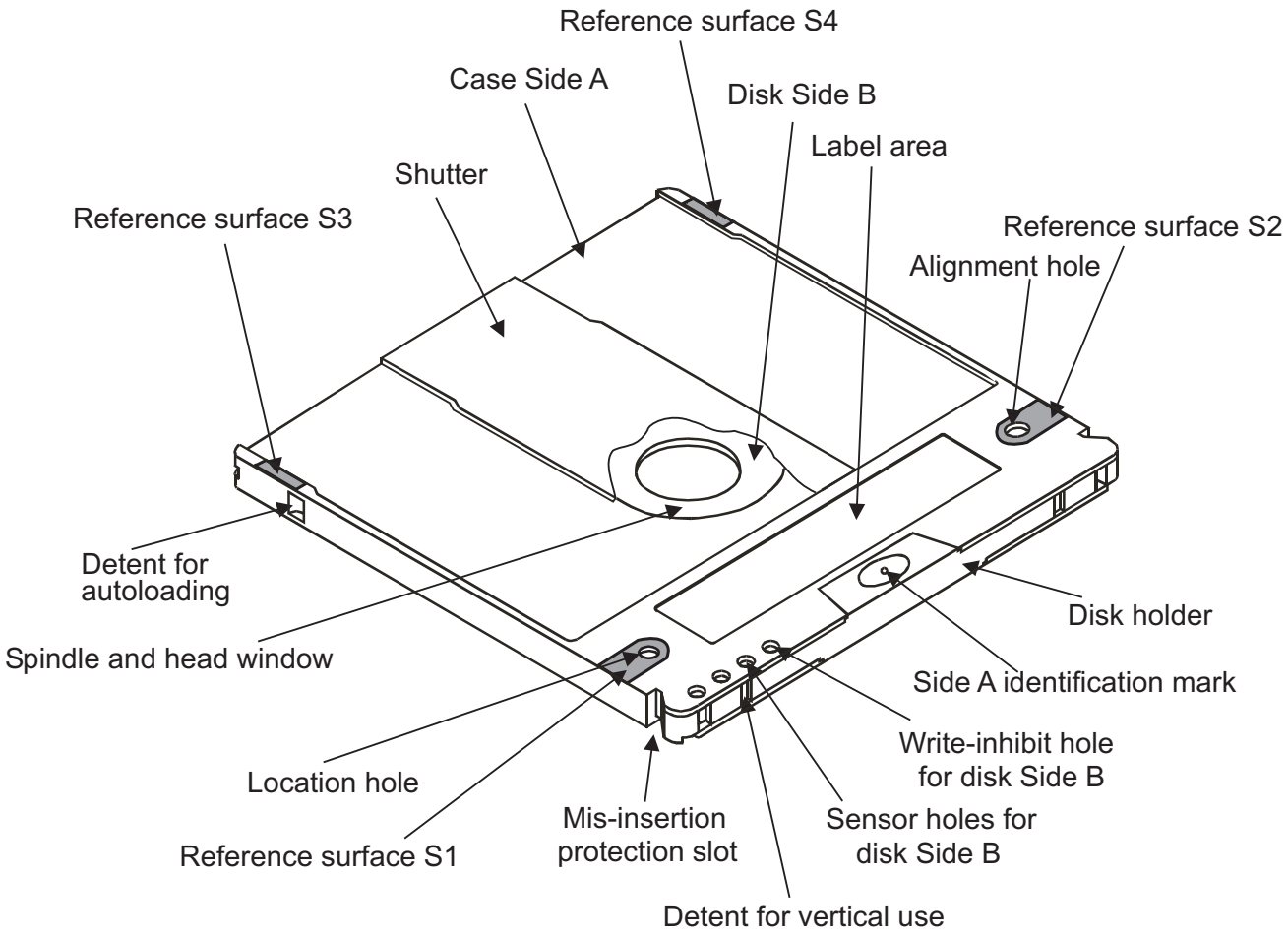

Figure 4 - General view of the Type 6 and Type 8 cases, seen from Side A

© ISO/IEC 2004 – All rights reserved
Copyright International Organization for Standardization
Reproduced by IHS under license with ISO
No reproduction or networking permitted without license from IHS
Not for Resale

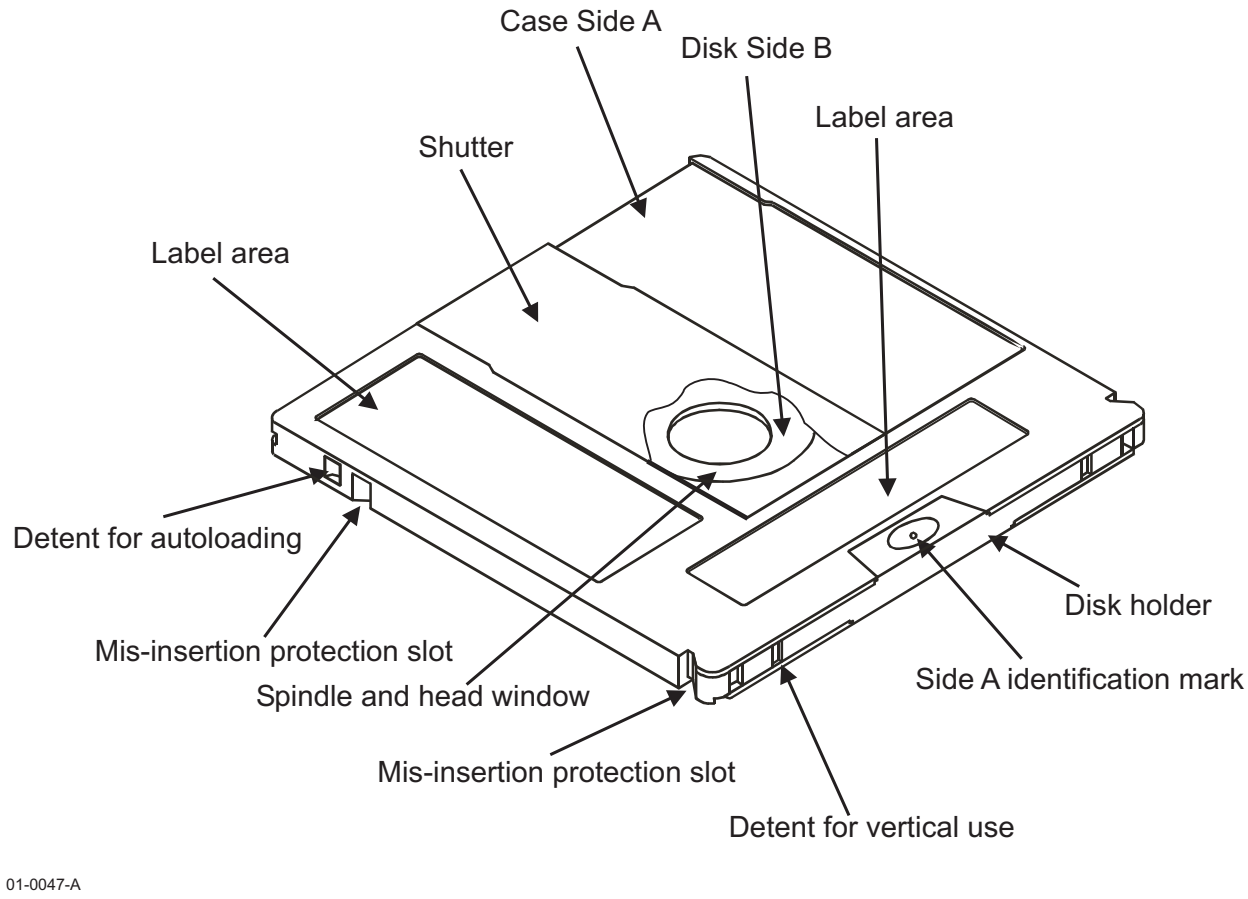

Figure 5 - General view of the Type 7 and Type 9 cases, seen from Side A

7 General requirements

7.1 Environments

7.1.1 Test environment

The test environment is the environment where the air immediately surrounding the case has the following properties:

Temperature:	23 °C ± 2 °C
Relative humidity:	50 % ± 5 %
Atmospheric pressure:	86 kPa to 106 kPa

No condensation on or in the case or cartridge shall occur. Before testing, the case or cartridge shall be conditioned in this environment for 48 hours minimum.

Unless otherwise stated, all tests and measurements shall be made in this test environment.

7.1.2 Operating environment

The case shall meets all requirements of this International Standard in the specified test environment and provide mechanical interchange over the specified ranges of environmental parameters in the operating environment. When the case according to this International Standard contains a DVD-RAM disk according to Standard ISO/IEC 17592, they constitute together a cartridge. This cartridge shall meet the requirements of this clause and provides for data interchange.

© ISO/IEC 2004 All rights reserved

Copyright International Organization for Standardization
Reproduced by IHS under license with ISO
No reproduction or networking permitted without license from IHS
Not for Resale

The operating environment is the environment where the air immediately surrounding the case or cartridge has the following properties:

Temperature:	5 °C to 60 °C
Relative humidity:	3 % to 85 %
Absolute humidity:	1 g/m^3 to 30 g/m^3
Temperature gradient:	10 °C /h max.
Relative humidity gradient:	10 %/h max.

No condensation on or in the case or cartridge shall occur. If the case or cartridge has been exposed to conditions outside those specified in this clause, it shall be acclimatized in the operating environment for at least 2 h before use.

7.1.3 Storage environment

The storage environment is defined as an environment where the air immediately surrounding the case or cartridge has the following properties.

Temperature:	-10 °C to 50 °C
Relative humidity:	3 % to 85 %
Absolute humidity:	1 g/m^3 to 30 g/m^3
Atmospheric pressure:	75 kPa to 106 kPa
Temperature gradient:	10 °C /h max.
Relative humidity gradient:	10 %/h max.

No condensation on or in the case or cartridge shall occur.

7.1.4 Transportation

This does not specify requirements for transportation; guidance is given in annex E.

7.2 Temperature shock

The case shall withstand a temperature shock of up to 20°C when inserted into, or removed from, the drive.

7.3 Safety requirement

The case shall satisfy the safety requirements of Standard ECMA-287, when used in the intended manner or in any foreseeable use in an information processing system.

7.4 Flammability

The case shall be made from materials shall be of materials that, if ignited from a match flame, shall not continue to burn in a still carbon dioxide atmosphere.

© ISO/IEC 2004 – All rights reserved
Copyright International Organization for Standardization
Reproduced by IHS under license with ISO
No reproduction or networking permitted without license from IHS
Not for Resale

Section 2 - Dimensional and mechanical characteristics of the case for 120 mm disks

8 Dimensional characteristics

The dimensions of the case shall be referred to three orthogonal Reference Planes X, Y and Z. The case shall be constrained such that four reference surfaces S1 to S4 on Side B of the case lie in Reference Plane Z. The intersection of the three planes defines the centre of the location hole. The centre of the alignment hole shall lie on the intersection of Reference Planes X and Z. Refer to annex A. A dimension of a feature referenced to one of the planes is the shortest distance from the feature to the plane.

Side A of the Type 1, Type 4 and Type 5 cases are referred to as the three orthogonal Reference Planes X, Y' and Z', where

- Y' is a plane parallel to Reference Plane Y at a nominal distance of 102,0 mm,
- Z' is a plane parallel to Reference Plane Z at a nominal distance of 8,0 mm.

8.1 Dimensions of the Type 1 case

The dimensions of the Type 1 case shall be measured in the test environment (see 7.1.1). The dimensions of the case in an operating environment (see 7.1.2) can be estimated from the dimensions specified in this clause.

8.1.1 Overall dimensions (Figure 6)

The total length of the case shall be

L_{101} = 135,5 mm ± 0,4 mm

At a width

L_{103} = 3,6 mm min

the distance from the top of the case to Reference Plane X shall be

$L_{102} = 112{,}5\ ^{+\ 0{,}3\ \text{mm}}_{-\ 0{,}2\ \text{mm}}$

from the left-hand and right-hand edges of the case.

The distance from the bottom of the case to Reference Plane X shall be

L_{104} = 23,0 mm ± 0,2 mm.

The total width of the case shall be

$L_{105} = 124{,}6\ ^{+\ 0{,}0\ \text{mm}}_{-\ 0{,}5\ \text{mm}}$

The distance from the left-hand side of the case to Reference Plane Y shall be

$L_{106} = 113{,}3\ ^{+\ 0{,}2\ \text{mm}}_{-\ 0{,}4\ \text{mm}}$

The distance from the right-hand side of the case to Reference Plane Y shall be

$L_{107} = 11{,}3\ ^{+\ 0{,}1\ \text{mm}}_{-\ 0{,}3\ \text{mm}}$.

The two corners of the top shall be rounded off with a radius

R_{101} = 4,0 mm ± 0,2 mm

© ISO/IEC 2004 All rights reserved

Copyright International Organization for Standardization
Reproduced by IHS under license with ISO
No reproduction or networking permitted without license from IHS
Not for Resale

centred at

L_{108} = 4,0 mm ± 0,1 mm

from the edge of the case and

L_{109} = 3,5 mm ± 0,1 mm

from the top of the case.

The two corners of the bottom shall be rounded off with a radius

R_{102} = 4,0 mm ± 0,2 mm.

In the zones delimited by

L_{110} = 6,0 mm

from the left-hand and right-hand edges of the case, there shall be the continuous guide areas running from the top to Reference Plane X of the case, with a width

L_{111} = 0,8 mm min.

The thickness of the case shall be

$L_{112} = 8{,}0\ \text{mm}\ {}^{+\,0{,}2\ \text{mm}}_{-\,0{,}1\ \text{mm}}$.

The eight long edges of the case shall be rounded off with a radius

R_{103} = 0,5 mm ± 0,1 mm.

8.1.2 Location hole (Figure 6)

The centre of the location hole shall coincide with the intersection of Reference Planes X, Y and Z.

The diameter of the hole shall be

$D_{101} = 4{,}00\ \text{mm}\ {}^{+\,0{,}05\ \text{mm}}_{-\,0{,}00\ \text{mm}}$

Its depth shall be

L_{113} = 1,2 mm min.

The room below the location hole shall be free by

L_{114} = 5,0 mm min.

below Reference Plane Z

The diameter of the free room shall be at least equal to D_{101}.

The lead-in edges shall be rounded off with a radius

R_{104} = 0,5 mm ± 0,1 mm.

8.1.3 Alignment hole (Figure 6)

The centre of the alignment hole shall lie on the intersection of the Reference Planes X and Z at a distance

L_{115} = 102,0 mm ± 0,2 mm

from Reference Plane Y.

The alignment hole shall have a substantially rectangular shape. Its dimensions shall be

$L_{116} = 4{,}00\ \text{mm}\ {}^{+\,0{,}05\ \text{mm}}_{0{,}00\ \text{mm}}$

© ISO/IEC 2004 – All rights reserved
Copyright International Organization for Standardization
Reproduced by IHS under license with ISO
No reproduction or networking permitted without license from IHS
Not for Resale

L_{117} = 5,6 mm $^{+\ 0,2\ mm}_{0.00\ mm}$

Its depth shall be equal to L_{113}. The room below the alignment hole shall be free by at least L_{114}. The dimensions of the free room shall be at least L_{116} and L_{117}.

The lead-in edges shall be rounded off with a radius R_{104}.

8.1.4 Reference surfaces (Figure 7)

There shall be four reference surfaces S1, S2, S3 and S4 on Side B of the case.

Surfaces S1 and S2 shall be circular with a diameter

D_{102} = 7,0 mm min.

S1 shall be centred on the location hole, and S2 shall be centred on the alignment hole.

Surfaces S3 and S4 shall be rectangular with dimensions

L_{118} = 8,2 mm max.

L_{119} = 110,2 mm max.

from Reference Plane Y and

L_{120} = 87,0 mm max.

L_{121} = 108,0 mm min.

from Reference Plane X, except in the areas of the detents for autoloading.

8.1.5 Insertion slots (Figure 8)

The case shall have two symmetrical insertion slots.

The bottom of the slots shall be at a distance

L_{123} = 60,0 mm ± 0,2 mm

from Reference Plane X.

The depth measured from the edge of the case shall be

L_{124} = 2,0 mm $^{+\ 0,2\ mm}_{-\ 0,0\ mm.}$

The side of the insertion slots parallel to Reference Plane Z shall be at a distance

L_{125} = 2,5 mm ± 0,1 mm

from Reference Plane Z. The width of the insertion slots shall be

L_{126} = 3,0 mm $^{+\ 0,2\ mm}_{-\ 0,0\ mm.}$

The slots shall have a lead-in slope defined by

L_{127} = 7,0 mm ± 0,2 mm

from the top of the case and an angle

α_{101} = 7,5° ± 1,0°.

© ISO/IEC 2004 All rights reserved

Copyright International Organization for Standardization
Reproduced by IHS under license with ISO
No reproduction or networking permitted without license from IHS
Not for Resale

8.1.6 Detents (Figure 8)

The case shall have two symmetrical detents intended for autoloading. The detents shall be through Side A and Side B.

The position and dimensions of the detents shall be

R_{105} = 0,5 mm max.

L_{128} = 100,5 mm ± 0,3 mm

L_{129} = 93,0 mm ± 0,3 mm

L_{130} = 3,3 mm ± 0,1 mm

L_{131} = 2,5 mm ± 0,1 mm.

The outside edges of the detents shall be rounded off with a radius

R_{106} = 0,5 mm ± 0,1 mm.

The bottom of the case shall have two symmetrical detents intended for clamping a cartridge in case of vertical use. Their dimensions shall be

L_{132} = 3,0 mm ± 0,1 mm

L_{133} = 3,0 mm ± 0,1 mm

L_{134} = 1,0 mm ± 0,1 mm

The centre of one of these detents shall lie on Reference Plane Y and the centre of the other hall be at a distance

L_{135} = 102,0 mm ± 0,3 mm

from Reference Plane Y. Both centres shall be at a distance

L_{136} = 4,0 mm ± 0,1 mm

from Reference Plane Z.

8.1.7 Gripper slots (Figure 8)

The case shall have two symmetrical gripper slots. The slots shall be through Sides A and B.

Each slot shall have a depth of

$$L_{137} = 3{,}0 \text{ mm} \begin{matrix} +\,0{,}3 \text{ mm} \\ -\,0{,}0 \text{ mm} \end{matrix}$$

from the edge of the case and a width of

$$L_{138} = 4{,}0 \text{ mm} \begin{matrix} +\,0{,}3 \text{ mm} \\ -\,0{,}0 \text{ mm.} \end{matrix}$$

The upper edge of the slot shall be at

$$L_{139} = 11{,}0 \text{ mm} \begin{matrix} +\,0{,}0 \text{ mm} \\ -\,0{,}3 \text{ mm} \end{matrix}$$

from Reference Plane X.

The corners of the slot shall be rounded off by a radius

R_{107} = 0,5 mm ± 0,2 mm.

© ISO/IEC 2004 – All rights reserved
Copyright International Organization for Standardization
Reproduced by IHS under license with ISO
No reproduction or networking permitted without license from IHS
Not for Resale

8.1.8 Write-inhibit hole (Figure 9)

The cases for two-sided disks shall have a write-inhibit hole on both Sides A and B. The cases for one-sided disks shall have a write-inhibit hole on Side B only. The write-inhibit hole shall have a device for opening and closing the hole. The hole at the right-hand side of Side B of the case, is the write-inhibit hole for Side A of the disk. The protected side of the disk shall be identified either by an indication on the case or by the fact that the device for Side A of the disk can be operated only from Side A of the case.

When writing and erasing on Side A of the disk are not allowed, the write-inhibit hole shall be open. It shall have a diameter

D_{103} = 3,0 mm min.

The position of its centre shall be specified on Side B of the case by

L_{140} = 18,5 mm ± 0,2 mm

L_{141} = 9,0 mm ± 0,2 mm

The hole shall extend below Reference Plane Z by

L_{142} = 5,0 mm min.

with a diameter equal at least to D_{103}.

When writing and erasing of the disk are allowed, the write-inhibit hole shall be closed by the write protect device.

The write protect device shall not be recessed from Reference Plane Z by more than 0,3 mm.

8.1.9 Sensor holes (Figure 9)

The case shall have three sensor holes on Side B. The set of holes on Side B of the case, A1, A2 and A3 pertains to Side A of the disk. The holes shall have a diameter of

D_{104} = 3,0 mm min.

The positions of their centres shall be specified by L_{140} and

L_{144} = 7,5 mm ± 0,2 mm

L_{145} = 3,5 mm ± 0,2 mm

L_{146} = 2,0 mm ± 0,2 mm.

The room below the holes shall be free by

L_{147} = 5,0 mm min.

from Reference Plane Z.

The diameter of the free room shall be at least equal to D_{104}. The holes shall be permitted to extend through Side A.

When a hole for Side A of the disk is closed, the closure shall not be recessed from Reference Plane Z by more than 0,3 mm.

Side A of the case shall have corresponding sensor holes B1, B2 and B3 with the diameter D_{104}.

The functions identified by the states of the sensor holes are specified in table 1.

--`,,`-`-`,,`,,`,`,`---

© ISO/IEC 2004 All rights reserved

Copyright International Organization for Standardization
Reproduced by IHS under license with ISO
No reproduction or networking permitted without license from IHS
Not for Resale

Table 1 - States of the sensor holes

Sensor hole	Function		State	
	Closed	Open	Case for a two-sided disk	Case for a one-sided disk
A1	The original disk is in the case	Not permitted	Closed	Closed
A2	Active side	Not permitted	Closed	Closed
A3	Reserved for future standardization		Closed	Closed
B1	The original disk is in the case	Not permitted	Closed	Closed
B2	Active side	Non active side	Closed	Open
B3	Reserved for future standardization		Closed	Closed

8.1.10 Sensing areas (Figure 9)

The case shall have two sensing areas on Side B used by drives for the detection of a cartridge. The first area shall be limited by Reference Planes X and Y, the bottom and the right-hand side of the case. The second area shall be limited by Reference Plane X, a plane parallel to Reference Plane Y at a distance equal to L_{115}, the bottom and the left-hand side of the case. These areas may be recessed from Reference Plane Z by 0,3 mm max., except for the reference surfaces S1 and S2, the gripper slots and the sensor holes.

8.1.11 Spindle and head window (Figure 10)

The dimensions of the window shall be referenced to a centreline, located at a distance

L_{150} = 51,0 mm ± 0,1 mm

from Reference Plane Y. The width of the window from the top of the case to

L_{151} = 50,0 mm max.

shall be

$$L_{152} = 19{,}5 \text{ mm} \begin{matrix} +\ 0{,}2 \text{ mm} \\ -\ 0{,}00 \text{ mm} \end{matrix}$$

and

$$L_{153} = 19{,}5 \text{ mm} \begin{matrix} +\ 0{,}2 \text{ mm} \\ -\ 0{,}00 \text{ mm} \end{matrix}$$

The top of the window shall be specified by

R_{108} = 60,7 mm min.

originating from the intersection of L_{150} and

L_{154} = 40,0 mm ± 0,1 mm.

The width of the window from L_{151} to L_{154} shall be given by

L_{155} = 17,0 mm min.

and

L_{156} = 17,0 mm min.

The bottom of the window shall be the arc of the semi-circle that smoothly joins the sides of the window, specified by a radius

© ISO/IEC 2004 – All rights reserved
Copyright International Organization for Standardization
Reproduced by IHS under license with ISO
No reproduction or networking permitted without license from IHS
Not for Resale

R_{109} = 17,0 mm min.

and its centre shall be defined by the intersection of L_{150} and L_{154}.

The area bounded by R_{108} and top of the case shall be recessed from Reference Plane Z by

L_{157} = 2,55 mm min.

over the width of the window.

8.1.12 Shutter shape (Figure 11)

The case shall have a spring-loaded shutter completely covering the spindle and the head window when the case is not inside a drive. The shutter shall be free to slide in a recessed area of the case. The shutter shall not protrude beyond Reference Planes Z or Z' by more than 0,15 mm.

When introduced into a drive, the shutter shall be moved so as to uncover the spindle and the head windows. It shall have a pair of guide edges against which the shutter opening mechanism of the drive can act to open the shutter. The shutter can be shifted right or left.

Both guide edges shall be located at

$$L_{158} = 112{,}0 \text{ mm} \begin{matrix} + 0{,}2 \text{ mm} \\ - 0{,}4 \text{ mm} \end{matrix}$$

from Reference Plane X.

When the shutter is closed, the right-hand opener edge shall be at

L_{159} = 38,0 mm ± 0,4 mm

and the left-hand opener edge shall be at

L_{160} = 64,0 mm ± 0,4 mm

from Reference Plane Y.

The depth of each opener edge shall be at

$$L_{161} = 3{,}0 \text{ mm} \begin{matrix} + 0{,}2 \text{ mm} \\ - 0{,}0 \text{ mm} \end{matrix}$$

from L_{158} and the top shall be rounded off with a radius

R_{110} = 0,5 mm max.

The length of the guide edges measured from the corresponding opener edge shall be

L_{162} = 7,0 mm min.

The intersection of the guide edges and the opener edges shall be rounded off with a radius

R_{111} = 0,5 mm max.

Other corners of the guide and opener edges shall be rounded off with a radius

R_{112} = 1,0 mm max.

8.1.13 Path for shutter opener (Figures 12 and 13)

When the shutter is moved rightwards until the left-hand opener edge is at a distance

L_{163} = 26,5 mm

from Reference Plane Y, the windows shall be open over

L_{164} = 16,5 mm min.

© ISO/IEC 2004 All rights reserved

Copyright International Organization for Standardization
Reproduced by IHS under license with ISO
No reproduction or networking permitted without license from IHS
Not for Resale

from L_{150} and over an arc of

R_{113} = 17,0 mm min.

originating at the intersection of L_{150} and L_{154}.

The left-hand opener edge shall be at

L_{165} = 26,0 mm max.

from Reference Plane Y, when the shutter is in its right-hand end position.

When the corresponding the position of the right-hand opener edge is

L_{166} = 75,5 mm,

the windows shall be open at L_{164} from L_{150} and with a radius R_{113} originating at the intersection of L_{150} and L_{154}.

The position of the right-hand opener edge shall be

L_{167} = 76,0 mm min.

when the shutter is in its left-hand end position.

8.1.14 Label areas (Figure 14)

The case shall have three label areas on Side A and Side B and on the bottom side, with the following dimensions.

On Sides A and B

L_{168} = 10,0 mm ± 0,2 mm

L_{169} = 13,0 mm ± 0,2 mm

L_{170} = 76,0 mm ± 0,3 mm

R_{114} = 2,0 mm ± 0,2 mm

On the bottom side

L_{171} = 13,0 mm ± 0,2 mm

L_{172} = 76,0 mm ± 0,3 mm

L_{173} = 5,0 mm ± 0,2 mm

L_{174} = 97,0 mm ± 0,3 mm

L_{175} = 1,0 mm ± 0,2 mm

L_{176} = 6,0 mm ± 0,2 mm.

The label area shall be recessed by 0,2 mm min. on all three sides.

8.1.15 Identification marks for Sides A and B (Figure 15)

Side A and Side B shall be identified by an identification mark provided on a concave part on the right-hand side of Side A and Side B, respectively. On Side A, this concave part presents one small round projection, on Side B two such projections are provided. The position and dimensions of these identification marks shall be as follows.

Side A

R_{115} = 0,5 $^{+\ 0,1\ \text{mm}}_{-\ 0,0\ \text{mm}}$

R_{116} = 18,0 mm ± 1,0 mm

© ISO/IEC 2004 – All rights reserved
Copyright International Organization for Standardization
Reproduced by IHS under license with ISO
No reproduction or networking permitted without license from IHS
Not for Resale

L_{178} = 0,5 mm $^{+\ 0,1\ mm}_{-\ 0,0\ mm}$

L_{179} = 7,0 mm ± 0,3 mm

L_{180} = 5,0 mm ± 0,3 mm

L_{181} = 0,6 mm $^{+\ 0,1\ mm}_{-\ 0,0\ mm}$

Side B

R_{115} = 0,5 mm $^{+\ 0,1\ mm}_{-\ 0,0\ mm}$

R_{116} = 18,0 mm ± 1,0 mm

L_{178} = 0,5 mm $^{+\ 0,1\ mm}_{-\ 0,0\ mm}$

L_{179} = 7,0 mm ± 0,3 mm

L_{180} = 5,0 mm ± 0,3 mm

L_{181} = 0,6 mm $^{+\ 0,1\ mm}_{-\ 0,0\ mm}$

L_{182} = 3,2 mm ± 0,3 mm.

© ISO/IEC 2004 All rights reserved

Copyright International Organization for Standardization
Reproduced by IHS under license with ISO
No reproduction or networking permitted without license from IHS
Not for Resale

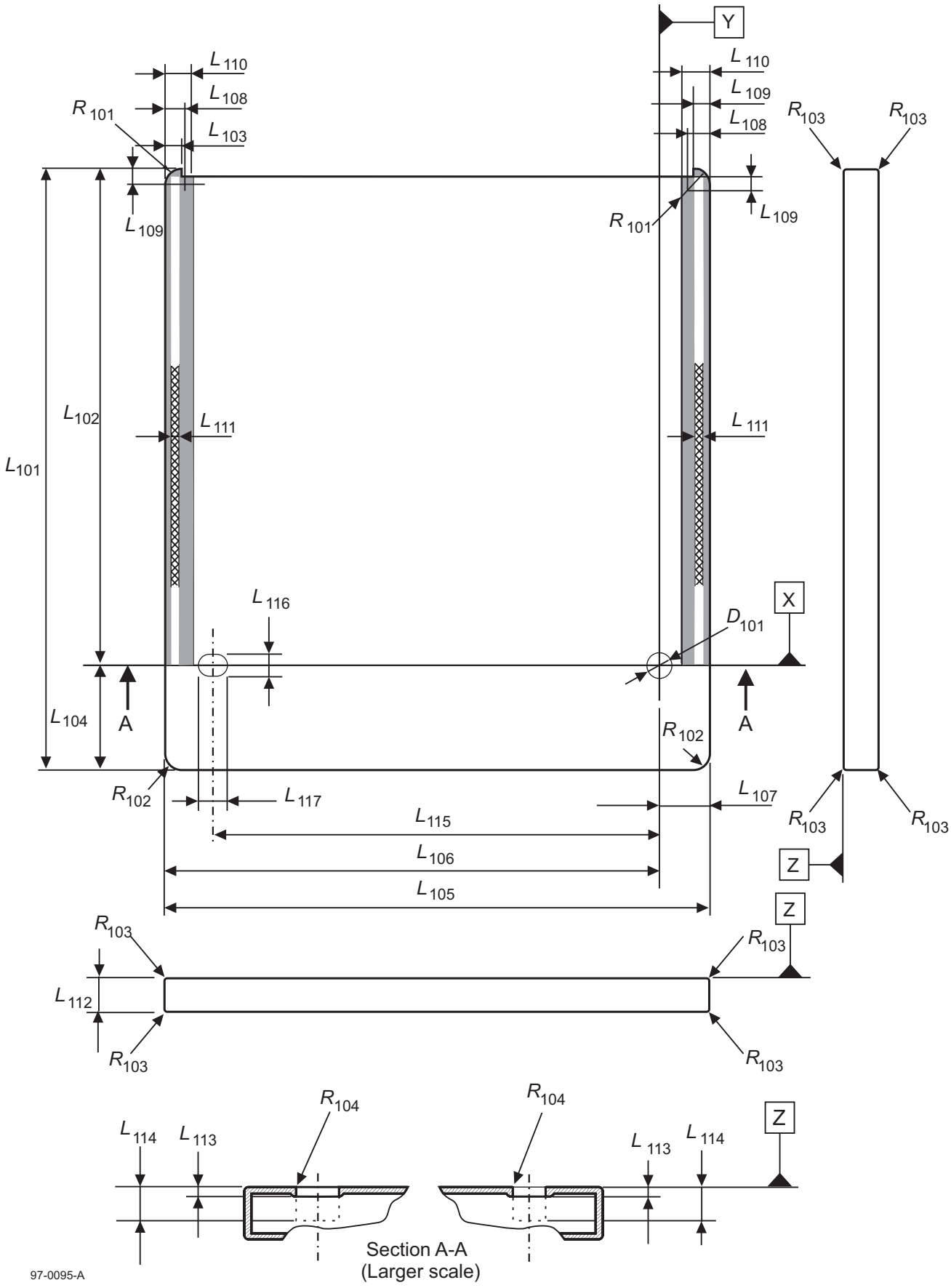

Figure 6 - Overall dimensions

© ISO/IEC 2004 – All rights reserved
Copyright International Organization for Standardization
Reproduced by IHS under license with ISO
No reproduction or networking permitted without license from IHS
Not for Resale

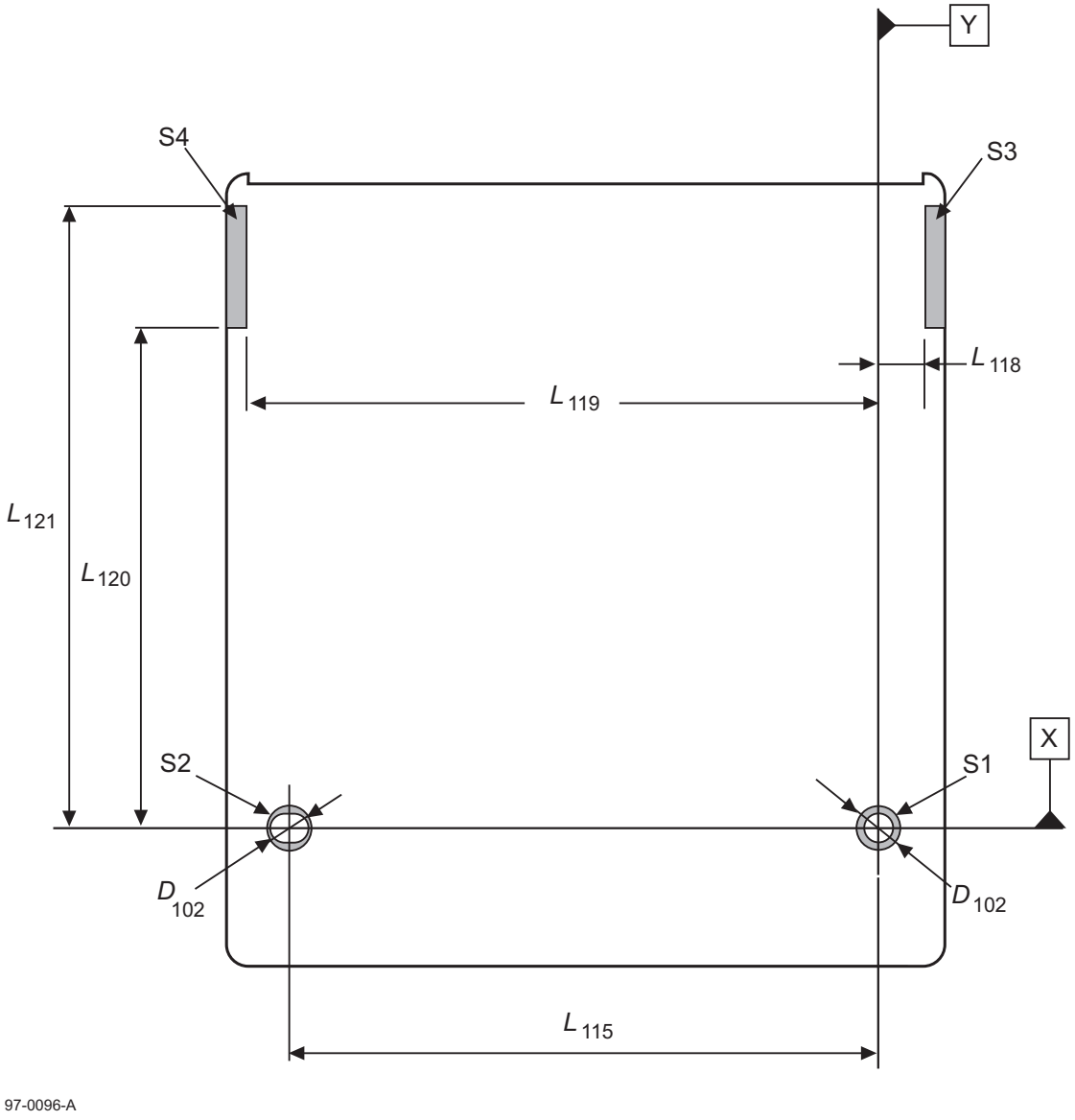

Figure 7 - Reference surfaces

Copyright International Organization for Standardization © ISO/IEC 2004 All rights reserved
Reproduced by IHS under license with ISO
No reproduction or networking permitted without license from IHS
Not for Resale

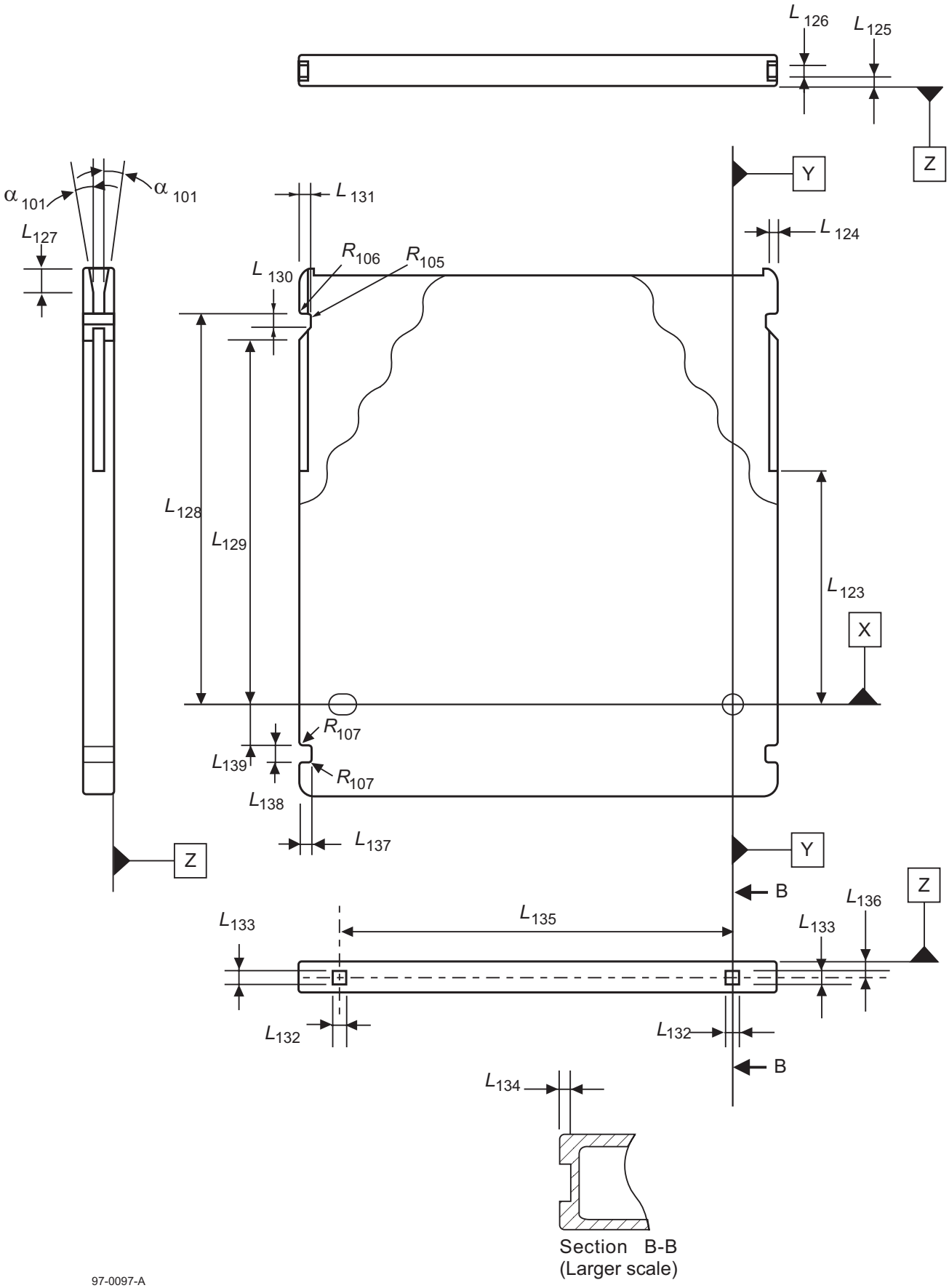

Figure 8 - Insertion slots, detents and gripper slots

© ISO/IEC 2004 – All rights reserved
Copyright International Organization for Standardization
Reproduced by IHS under license with ISO
No reproduction or networking permitted without license from IHS
Not for Resale

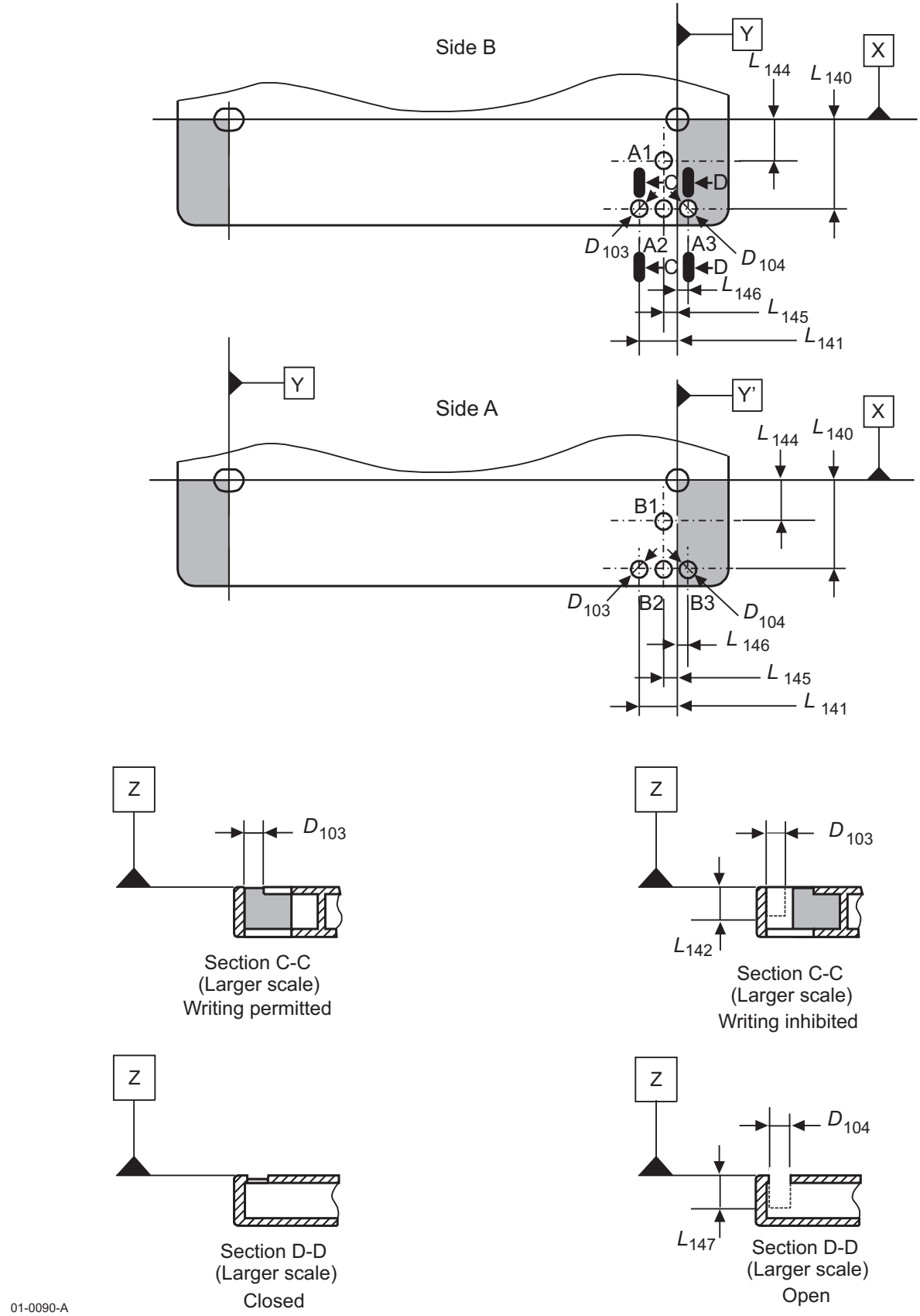

Figure 9 - Write-inhibit hole, sensor holes and sensing areas

Copyright International Organization for Standardization All rights reserved
Reproduced by IHS under license with ISO
No reproduction or networking permitted without license from IHS
Not for Resale

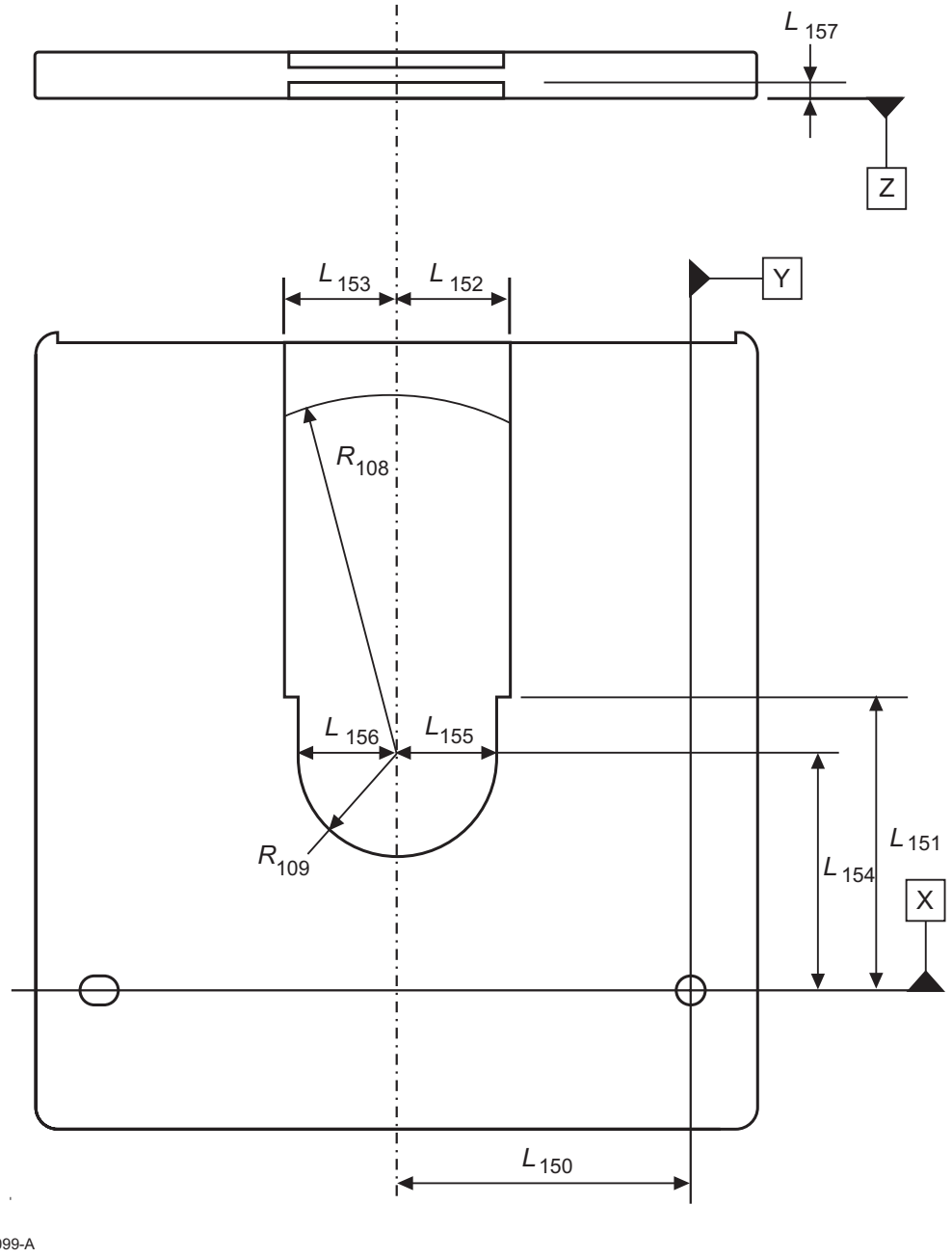

Figure 10 - Spindle and head window

© ISO/IEC 2004 – All rights reserved
Copyright International Organization for Standardization
Reproduced by IHS under license with ISO
No reproduction or networking permitted without license from IHS
Not for Resale

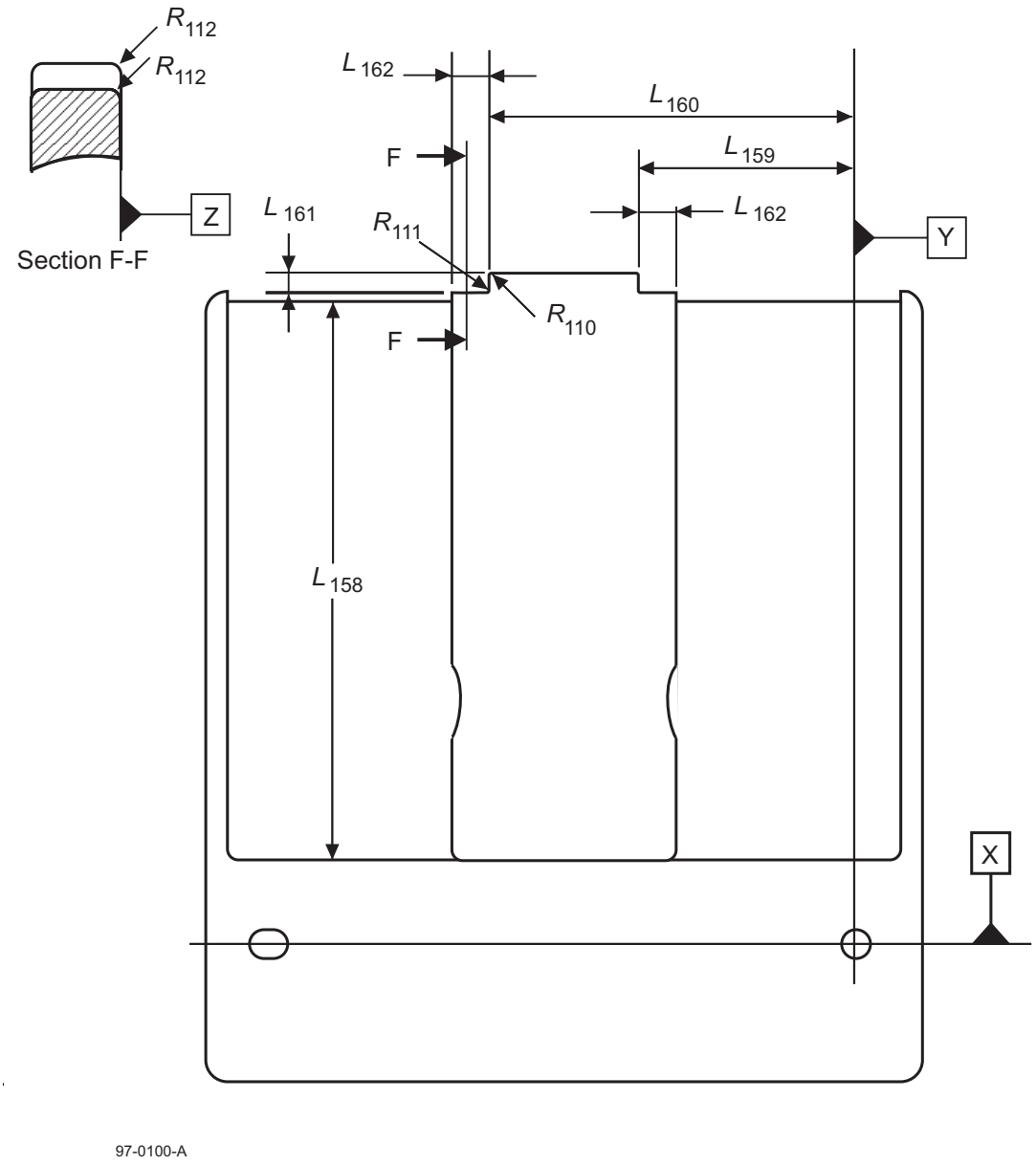

Figure 11 - Shape of the shutter

© ISO/IEC 2004 All rights reserved
Copyright International Organization for Standardization
Reproduced by IHS under license with ISO
No reproduction or networking permitted without license from IHS
Not for Resale

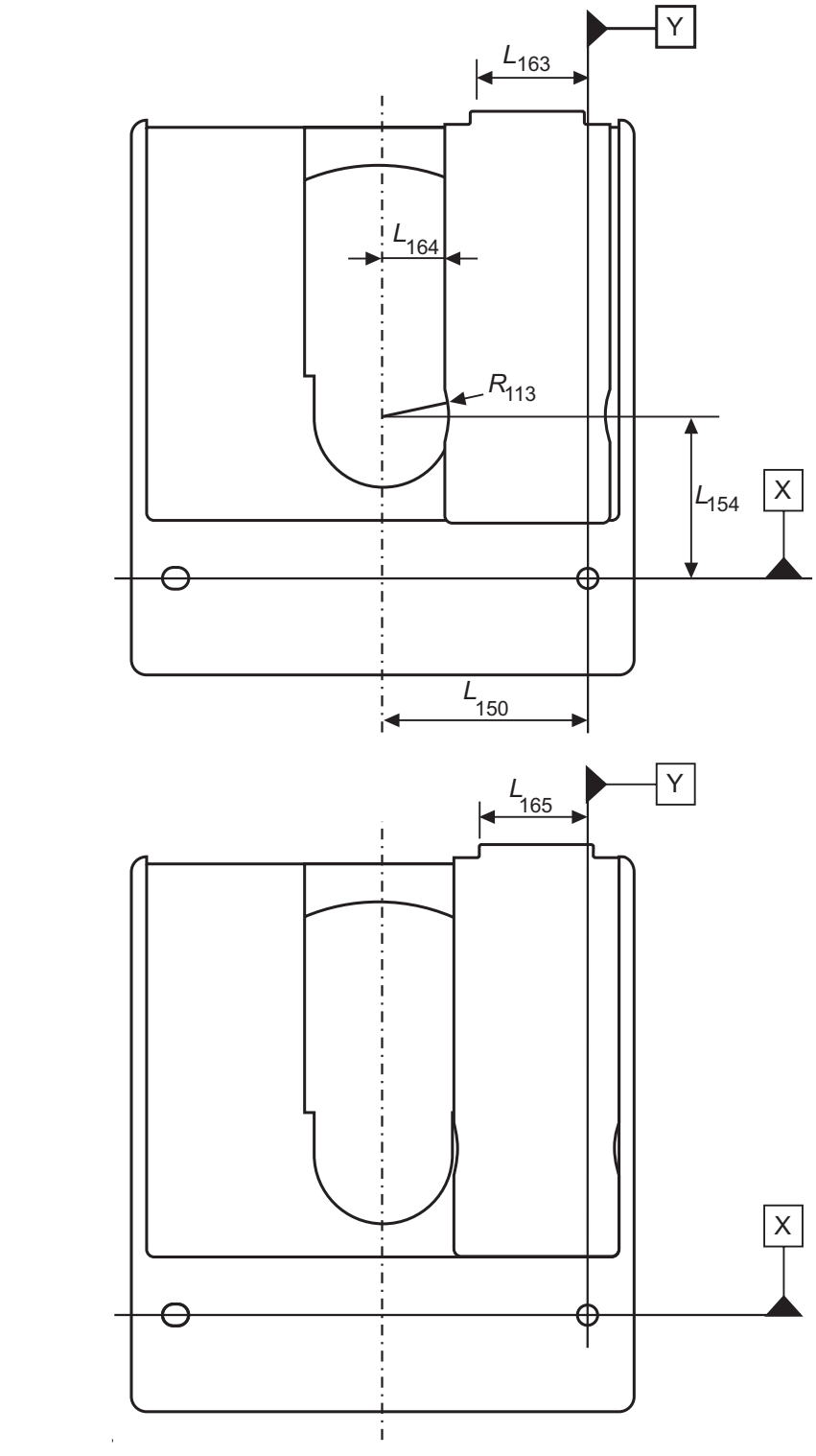

Figure 12 - Shutter in just right-hand open position (top view) and maximum right-hand open position (bottom view)

Copyright International Organization for Standardization
Reproduced by IHS under license with ISO
No reproduction or networking permitted without license from IHS
© ISO/IEC 2004 – All rights reserved
Not for Resale

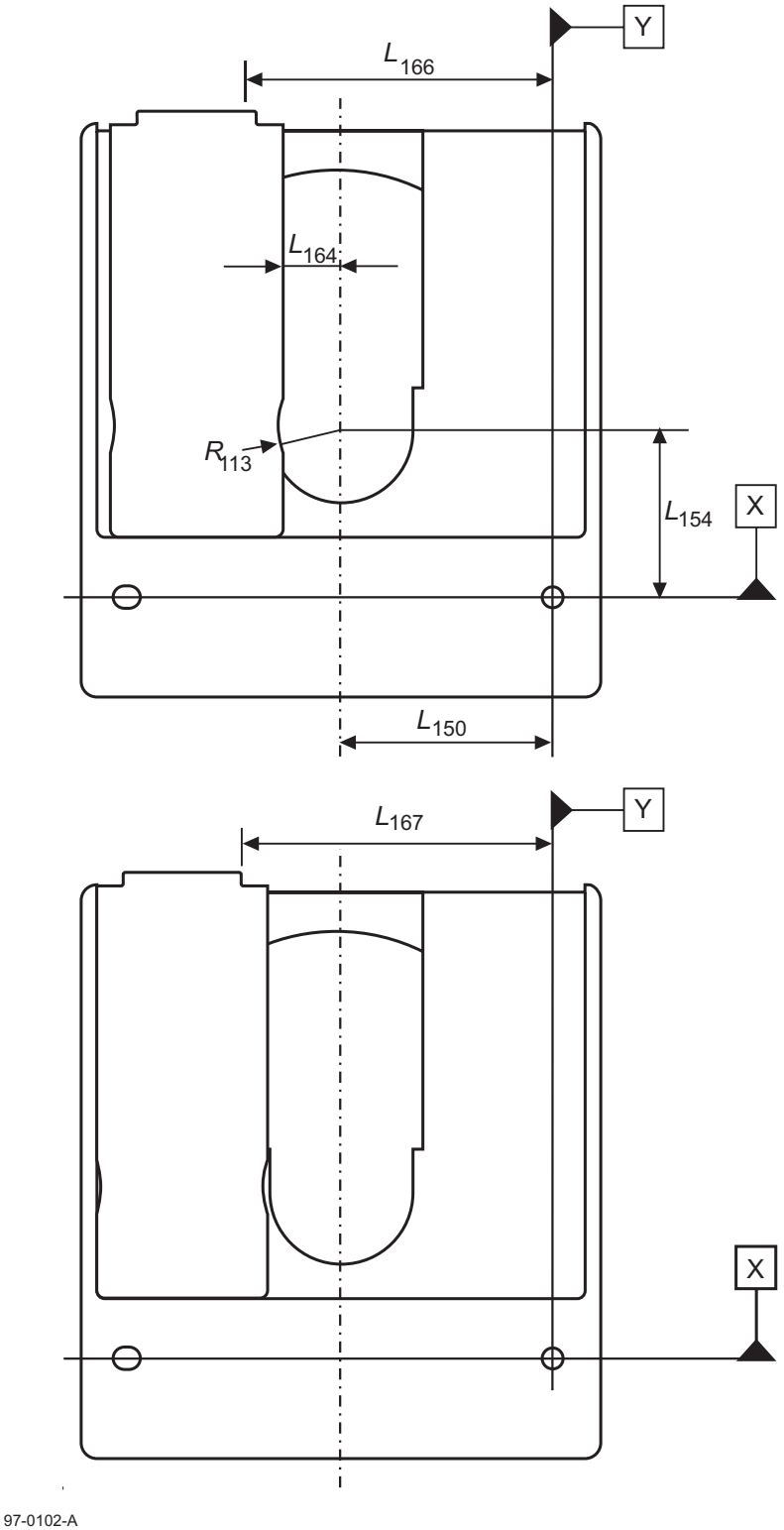

Figure 13 - Shutter in just left-hand open position (top view) and maximum left-hand open position (bottom view)

© ISO/IEC 2004 All rights reserved
Copyright International Organization for Standardization
Reproduced by IHS under license with ISO
No reproduction or networking permitted without license from IHS
Not for Resale

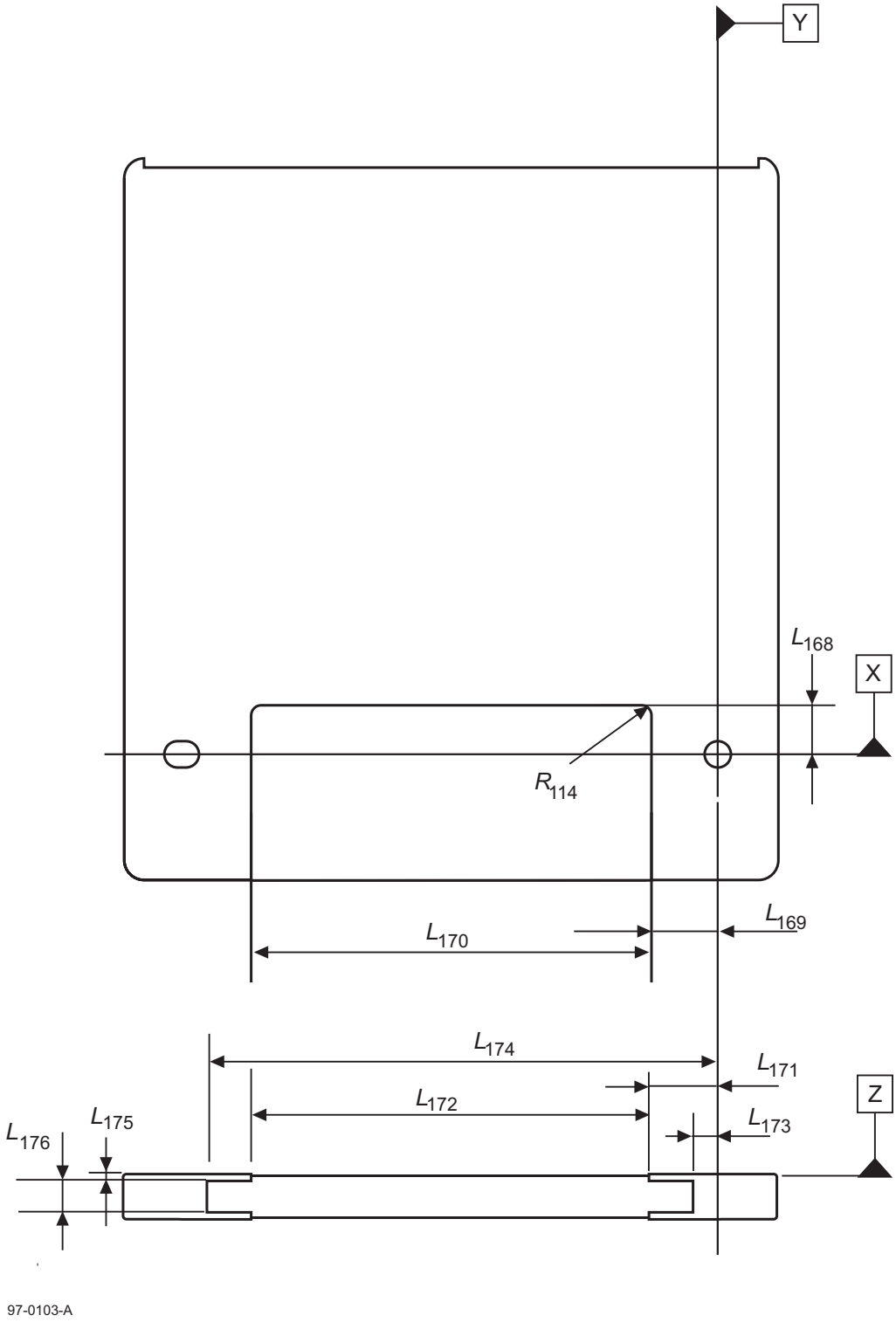

Figure 14 - Label areas

© ISO/IEC 2004 – All rights reserved
Copyright International Organization for Standardization
Reproduced by IHS under license with ISO
No reproduction or networking permitted without license from IHS
Not for Resale

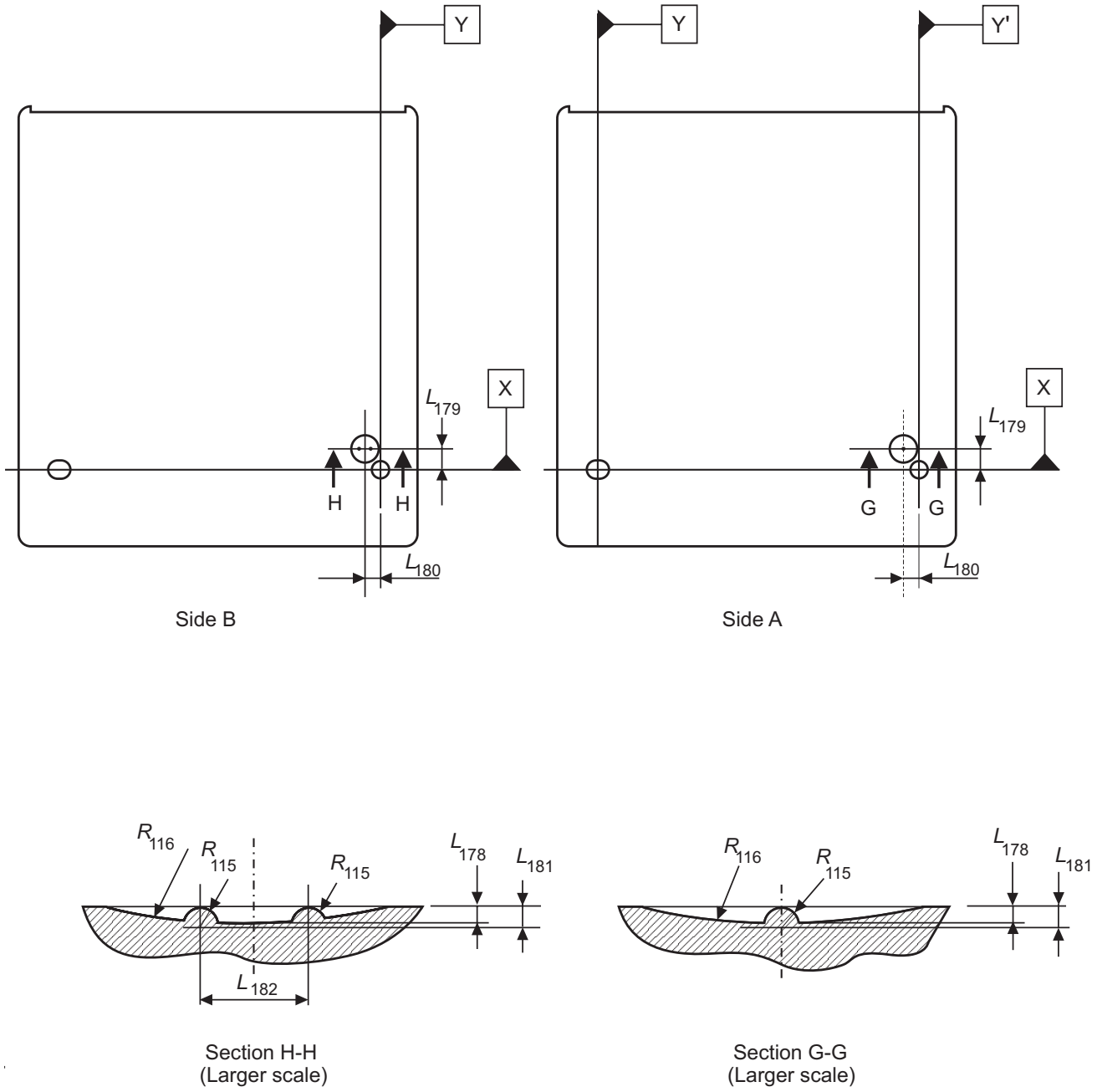

Figure 15 - Identification marks of Side A and B

© ISO/IEC 2004 All rights reserved

Copyright International Organization for Standardization
Reproduced by IHS under license with ISO
No reproduction or networking permitted without license from IHS
Not for Resale

8.2 Dimensions of the Type 2 case

The dimensions of the Type 2 case shall be measured in the test environment (see 7.1.1). The dimensions of the case in an operating environment (see 7.1.2) can be estimated from the dimensions specified in this clause.

8.2.1 Overall dimensions (Figure 16)

The total length of the case shall be

L_{201} = 135,5 mm ± 0,4 mm.

At a width

L_{203} = 3,6 mm min.

the distance from the top of the case to Reference Plane X shall be

$L_{202} = 112{,}5\ ^{+\ 0{,}3\ \text{mm}}_{-\ 0{,}2\ \text{mm}}$

from the left-hand and right-hand edges of the case.

The distance from the bottom of the case to Reference Plane X shall be

L_{204} = 23,0 mm ± 0,2 mm.

The total width of the case shall be

$L_{205} = 124{,}6\ ^{+\ 0{,}0\ \text{mm}}_{-\ 0{,}5\ \text{mm}}$

The distance from the left-hand side of the case to Reference Plane Y shall be

$L_{206} = 113{,}3\ ^{+\ 0{,}2\ \text{mm}}_{-\ 0{,}4\ \text{mm}}$

The distance from the right-hand side of the case to Reference Plane Y shall be

$L_{207} = 11{,}3\ ^{+\ 0{,}1\ \text{mm}}_{-\ 0{,}3\ \text{mm}}$

The two corners of the top shall be rounded off with a radius

R_{201} = 4,0 mm ± 0,2 mm

centred at

L_{208} = 4,0 mm ± 0,1 mm

from the edge of the case and

L_{209} = 3,5 mm ± 0,1 mm

from the top of the case.

The two corners of the bottom shall be rounded off with a radius

R_{202} = 4,0 mm ± 0,2 mm.

In the zones delimited by

L_{210} = 6,0 mm

from the left-hand and right-hand edges of the case, there shall be the continuous guide areas running from the top to Reference Plane X of the case, with a width

L_{211} = 0,8 mm min.

© ISO/IEC 2004 – All rights reserved
Copyright International Organization for Standardization
Reproduced by IHS under license with ISO
No reproduction or networking permitted without license from IHS
Not for Resale

the thickness of the case shall be

$$L_{212} = 8{,}0 \text{ mm} \begin{matrix} +\ 0{,}2 \text{ mm} \\ -\ 0{,}1 \text{ mm} \end{matrix}$$

The eight long edges of the case shall be rounded off with a radius

R_{203} = 0,5 mm ± 0,1 mm.

L_{210} and L_{211} shall be defined on Side A as well as Side B.

8.2.2 Location hole (Figure 16)

The centre of the location hole shall coincide with the intersection of Reference Planes X, Y and Z.

The diameter of the hole shall be

$$D_{201} = 4{,}00 \text{ mm} \begin{matrix} +\ 0{,}05 \text{ mm} \\ -\ 0{,}00 \text{ mm} \end{matrix}$$

Its depth shall be

L_{213} = 1,2 mm min.

The room below the location hole shall be free by

L_{214} = 5,0 mm min.

from Reference Plane Z

The diameter of the free room shall be at least equal to D_{201}.

The lead-in edges shall be rounded off with a radius

R_{204} = 0,5 mm ± 0,1 mm.

8.2.3 Alignment hole (Figure 16)

The centre of the alignment hole shall lie on the intersection of the Reference Planes X and Z at a distance

L_{215} = 102,0 mm ± 0,2 mm

from Reference Plane Y.

The alignment hole shall have a substantially rectangular shape. Its dimensions shall be

$$L_{216} = 4{,}00 \text{ mm} \begin{matrix} +\ 0{,}05 \text{ mm} \\ -\ 0{,}00 \text{ mm} \end{matrix}$$

$$L_{217} = 5{,}6 \text{ mm} \begin{matrix} +\ 0{,}2 \text{ mm} \\ -\ 0{,}0 \text{ mm} \end{matrix}$$

Its depth shall be equal to L_{213}. The room below the alignment hole shall be free by at least L_{214}. The dimensions of the free room shall be at least L_{216} and L_{217}.

The lead-in edges shall be rounded off with a radius R_{204}.

8.2.4 Reference surfaces (Figure 17)

There shall be four reference surfaces S1, S2, S3 and S4 on Side B of the case.

Surfaces S1 and S2 shall be circular with a diameter

D_{202} = 7,0 mm min.

S1 shall be centred on the location hole, and S2 shall be centred on the alignment hole.

© ISO/IEC 2004 All rights reserved

Copyright International Organization for Standardization
Reproduced by IHS under license with ISO
No reproduction or networking permitted without license from IHS
Not for Resale

Surfaces S3 and S4 shall be rectangular with dimensions

L_{218} = 8,2 mm max.

L_{219} = 110,2 mm max.

from Reference Plane Y and

L_{220} = 87,0 mm max.

L_{221} = 108,0 mm min.

from Reference Plane X, except in the areas of the detents for autoloading.

8.2.5 Insertion slot (Figure 18)

The case shall have an insertion slot on its right-hand side.

The bottom of the slots shall be at a distance

L_{223} = 60,0 mm ± 0,2 mm

from Reference Plane X.

The depth measured from the edge of the case shall be

$L_{224} = 2{,}0\ \text{mm}\ {}^{+\,0{,}2\ \text{mm}}_{-\,0{,}0\ \text{mm}}$

The side of the insertion slot parallel to Reference Plane Z shall be at a distance

L_{225} = 2,5 mm ± 0,1 mm

from Reference Plane Z. The width of the insertion slot shall be

$L_{226} = 3{,}0\ \text{mm}\ {}^{+\,0{,}2\ \text{mm}}_{-\,0{,}0\ \text{mm}}$

The slots shall have a lead-in slope defined by

L_{227} = 7,0 mm ± 0,2 mm

from the top of the case and an angle

α_{201} = 7,5° ± 1,0°α.

8.2.6 Detents (Figure 18)

The case shall have two symmetrical detents intended for autoloading. The detents shall not extend through Side A.

The position and dimensions of the detents shall be

R_{205} = 0,5 mm max.

L_{228} = 100,5 mm ± 0,3 mm

L_{229} = 93,0 mm ± 0,3 mm

L_{230} = 3,3 mm ± 0,1 mm

L_{231} = 2,5 mm ± 0,1 mm.

The outside edges of the detents shall be rounded off with a radius

R_{206} = 0,5 mm ± 0,1 mm.

© ISO/IEC 2004 – All rights reserved
Copyright International Organization for Standardization
Reproduced by IHS under license with ISO
No reproduction or networking permitted without license from IHS
Not for Resale

The depth of the detents shall be

L_{232} = 6,5 mm ± 0,2 mm.

The bottom of the case shall have two symmetrical detents intended for clamping a cartridge in case of vertical use. Their dimensions shall be

L_{233} = 3,0 mm ± 0,1 mm

L_{234} = 3,0 mm ± 0,1 mm

L_{235} = 1,0 mm ± 0,1 mm

The centre of one of these detents shall lie on Reference Plane Y and the centre of the other shall be at a distance

L_{236} = 102,0 mm ± 0,3 mm

from Reference Plane Y. Both centres shall be at a distance

L_{237} = 4,0 mm ± 0,1 mm

from Reference Plane Z.

8.2.7 Gripper slots (Figure 18)

The case shall have two symmetrical gripper slots. The slots shall not extend through Side A.

Each slot shall have a depth of

$$L_{238} = 3{,}0\ \text{mm}\ {}^{+\,0{,}3\ \text{mm}}_{-\,0{,}0\ \text{mm}}$$

from the edge of the case and a width of

$$L_{239} = 4{,}0\ \text{mm}\ {}^{+\,0{,}3\ \text{mm}}_{-\,0{,}0\ \text{mm.}}$$

The upper edge of the slot shall be at

$$L_{240} = 11{,}0\ \text{mm}\ {}^{+\,0{,}0\ \text{mm}}_{-\,0{,}3\ \text{mm}}$$

from Reference Plane X.

The corners of the slot shall be rounded off by a radius

R_{207} = 0,5 mm ± 0,2 mm.

The depth of the gripper slots shall be

L_{241} = 6,5 mm ± 0,2 mm.

8.2.8 Write-inhibit hole (Figure 19)

The case shall have a write-inhibit hole on Side B. The write-inhibit hole shall have a device for opening and closing the hole.

When writing and erasing on Side A of the disk are not allowed, the write-inhibit hole shall be open. It shall have a diameter

D_{203} = 3,0 mm min.

The position of its centre shall be specified by

L_{242} = 18,5 mm ± 0,2 mm

L_{243} = 9,0 mm ± 0,2 mm

© ISO/IEC 2004 – All rights reserved

Copyright International Organization for Standardization
Reproduced by IHS under license with ISO
No reproduction or networking permitted without license from IHS
Not for Resale

on Side B of the case.

The hole shall extend below Reference Plane Z by

L_{244} = 5,0 mm min.

with a diameter equal at least to D_{203}.

When writing and erasing of the disk are allowed, the write-inhibit hole shall be closed by the write protect device.

The write protect device shall not be recessed from Reference Plane Z by more than 0,3 mm.

8.2.9 Sensor holes (Figure 19)

The case shall have three sensor holes on Side B. The set of holes on Side B of the case, A1, A2 and A3 pertains to Side A of the disk. The holes shall have a diameter of

D_{204} = 3,0 mm min.

and the positions of their centres shall be specified by L_{242} and

L_{246} = 7,5 mm ± 0,2 mm

L_{247} = 3,5 mm ± 0,2 mm

L_{248} = 2,0 mm ± 0,2 mm.

The room below the holes shall be free up to

L_{249} = 5,0 mm min.

above Reference Plane Z.

The diameter of the free room shall be at least equal to D_{204}. The holes shall be permitted to extend through Side A.

When a hole for Side A of the disk is closed, the closure shall not be recessed from Reference Plane Z by more than 0,3 mm.

The sensor hole A1 shall indicate whether a disk has been taken out once or not. Originally, the sensor hole A1 shall be closed, and once a disk has been taken out of the case, this hole shall be opened and never closed again.

The functions identified by the states of the sensor holes are specified in table 2.

Table 2 - States of the sensor holes

Sensor hole	Function		State
	Closed	Open	
A1	The original disk is in the case	The original disk has been taken out, or a disk has been put in	Closed / Open
A2	Active side	Not permitted	Closed
A3	Reserved for future standardization		Closed

8.2.10 Sensing areas (Figure 19)

The case shall have two sensing areas on Side B used by drives for the detection of a cartridge. The first area shall be limited by Reference Planes X and Y, the bottom and the right-hand side of the case. The second area shall be limited by Reference Plane X, a plane parallel to Reference Plane Y at a distance equal to L_{215}, the bottom and the left-hand side of the case. These areas may be recessed from Reference Plane Z by 0,3 mm max., except for the reference surfaces S1 and S2, the gripper slots and the sensor holes.

© ISO/IEC 2004 – All rights reserved
Copyright International Organization for Standardization
Reproduced by IHS under license with ISO
No reproduction or networking permitted without license from IHS
Not for Resale

8.2.11 Spindle and head window (Figure 20)

The dimensions of the window shall be referenced to a centreline, located at a distance

L_{252} = 51,0 mm ± 0,1 mm

from Reference Plane Y. The width of the window from the top of the case to

L_{253} = 50,0 mm max.

shall be

$$L_{254} = 19{,}5\ \text{mm}\ {}^{+\,0{,}2\ \text{mm}}_{-\,0{,}0\ \text{mm}}$$

and

$$L_{255} = 19{,}5\ \text{mm}\ {}^{+\,0{,}2\ \text{mm}}_{-\,0{,}0\ \text{mm}}.$$

The top of the window shall be specified by

R_{208} = 60,7 mm min.

originating from the intersection of L_{250} and

L_{256} = 40,0 mm ± 0,1 mm.

The width of the window from L_{253} to L_{256} shall be given by

L_{257} = 17,0 mm min.

and

L_{258} = 17,0 mm min.

The bottom of the window shall be the arc of the semi-circle that smoothly joins the sides of the window, specified by a radius

R_{209} = 17,0 mm min.

Its centre shall be defined by the intersection of L_{252} and L_{256}.

The area bounded by R_{208} and top of the case shall be recessed from Reference Plane Z by

L_{259} = 2,55 mm min.

L_{260} = 5,65 mm max.

over the width of the window.

8.2.12 Shutter shape (Figure 21)

The case shall have a spring-loaded shutter completely covering the spindle and head window when the case is not inside a drive. The shutter shall be free to slide in a recessed area of the case. The shutter shall not protrude beyond Reference Planes Z or the surface of Side A by more than 0,15 mm.

When introduced into a drive, the shutter shall be moved so as to uncover the spindle and head window. It shall have a pair of guide edges against which the shutter opening mechanism of the drive can act to open the shutter. The shutter can be shifted right or left.

Both guide edges shall be located at

$$L_{261} = 112{,}0\ \text{mm}\ {}^{+\,0{,}2\ \text{mm}}_{-\,0{,}4\ \text{mm}}.$$

© ISO/IEC 2004 All rights reserved

Copyright International Organization for Standardization
Reproduced by IHS under license with ISO
No reproduction or networking permitted without license from IHS
Not for Resale

from Reference Plane X.

When the shutter is closed, the right-hand opener edge shall be at

L_{262} = 38,0 mm ± 0,4 mm

and the left-hand opener edge shall be at

L_{263} = 64,0 mm ± 0,4 mm

from Reference Plane Y.

The depth of each opener edge shall be at

L_{264} = 3,0 mm $^{+\ 0,2\ mm}_{-\ 0,0\ mm}$

from L_{261} and the top shall be rounded off with a radius

R_{210} = 0,5 mm max.

The length of the guide edges measured from the corresponding opener edge shall be

L_{265} = 7,0 mm min.

The intersection of the guide edges and the opener edges shall be rounded off with a radius

R_{211} = 0,5 mm max.

Other corners of the guide and opener edges shall be rounded off with a radius

R_{212} = 1,0 mm max.

8.2.13 Path for shutter opener (Figure 22 and 23)

When the shutter is moved rightwards until the left opener edge is at a distance

L_{266} = 26,5 mm,

from Reference Plane Y, the windows shall be open over

L_{267} = 16,5 mm min.

from L_{252} and over an arc of

R_{213} = 17,0 mm min.

originating at the intersection of L_{252} and L_{256}.

The left-hand opener edge shall be at

L_{268} = 26,0 mm max.

from Reference Plane Y, when the shutter is in its right-hand end position.

When the corresponding position of the right-hand opener edge is

L_{269} = 75,5 mm,

the windows shall be open at L_{267} from L_{252} and with a radius R_{213} originating at the intersection of L_{252} and L_{256}.

The position of the right-hand opener edge shall be

L_{270} = 76,0 mm min.

when the shutter is in its left-hand end position.

© ISO/IEC 2004 – All rights reserved
Copyright International Organization for Standardization
Reproduced by IHS under license with ISO
No reproduction or networking permitted without license from IHS
Not for Resale

8.2.14 Label areas (Figure 24)

The case shall have three label areas on Side A and Side B and on the bottom side, with dimensions

Sides A and B

L_{271} = 10,0 mm ± 0,2 mm

L_{272} = 13,0 mm ± 0,2 mm

L_{273} = 76,0 mm ± 0,3 mm

R_{214} = 2,0 mm ± 0,2 mm

Bottom side

L_{274} = 13,0 mm ± 0,2 mm

L_{275} = 76,0 mm ± 0,3 mm

L_{276} = 5,0 mm ± 0,2 mm

L_{277} = 97,0 mm ± 0,3 mm

L_{278} = 1,0 mm ± 0,2 mm

L_{279} = 6,0 mm ± 0,2 mm.

The label area shall be recessed by 0,2 mm min. on all three sides.

8.2.15 Identification mark for Side A (Figure 25)

Side A shall be identified by an identification mark consisting of one small round projection provided in a concave part on the right-hand side of Side A. The position and dimensions of this identification mark shall be as follows.

R_{215} = 0,5 $^{+\ 0,1\ mm}_{-\ 0,0\ mm}$

R_{216} = 18,0 mm ± 1,0 mm

L_{281} = 0,5 $^{+\ 0,1\ mm}_{-\ 0,0\ mm}$

L_{282} = 7,0 mm ± 0,3 mm

L_{283} = 97,0mm ± 0,4 mm

L_{284} = 0,6 $^{+\ 0,1\ mm}_{-\ 0,0\ mm}$

8.2.16 Opening and opening cover for taking the disk out of the case

Type 2 case shall have an opening closed by a cover. In the original condition the case contains a disk and the cover is locked in closed position. Sensor hole A1 shall be closed. In order to take out the disk, sensor hole A1 shall be opened, then the cover can be opened and the disk removed from the case. Once sensor hole A1 has been opened, it always remains open whether or not the same disk or another disk has been introduced into the case.

This International Standard does not specify the design of the opening and of the cover. They should be designed so as not to damage the disk. An example of a cover is shown in annex H.

© ISO/IEC 2004 All rights reserved

Copyright International Organization for Standardization
Reproduced by IHS under license with ISO
No reproduction or networking permitted without license from IHS
Not for Resale

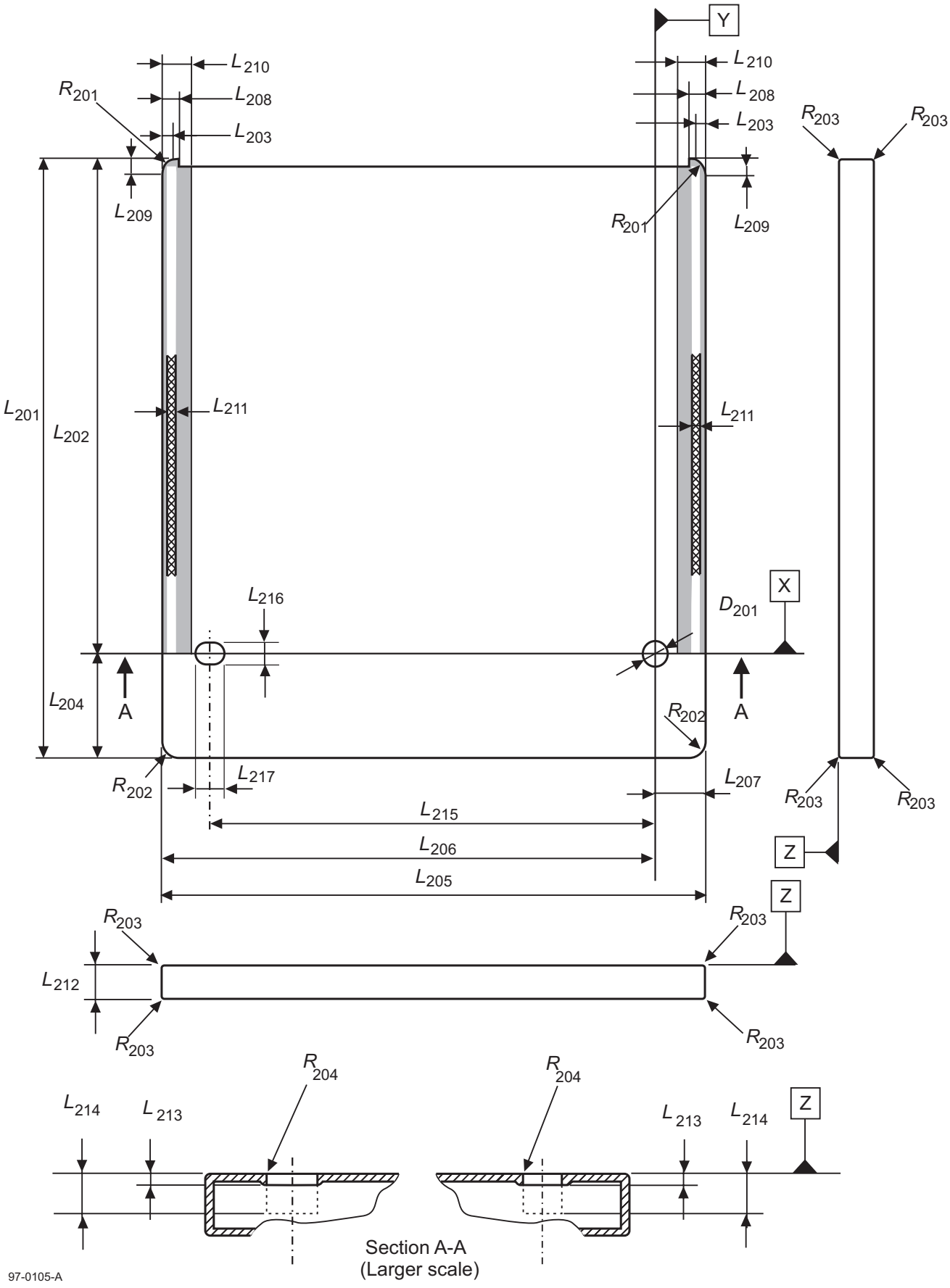

Figure 16 - Overall dimensions

© ISO/IEC 2004 – All rights reserved
Copyright International Organization for Standardization
Reproduced by IHS under license with ISO
No reproduction or networking permitted without license from IHS
Not for Resale

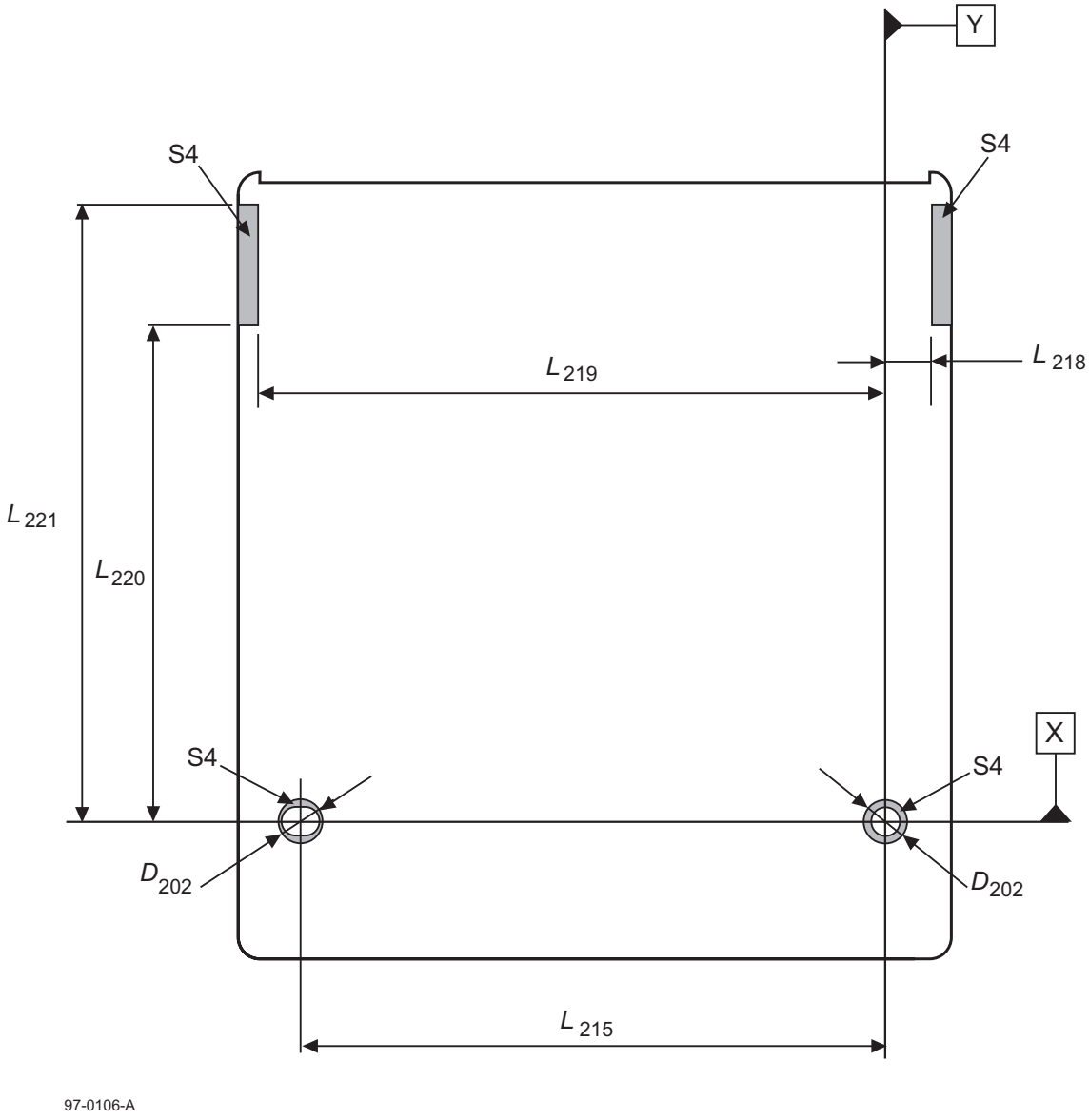

Figure 17 - Reference surfaces

© ISO/IEC 2004 All rights reserved
Copyright International Organization for Standardization
Reproduced by IHS under license with ISO
No reproduction or networking permitted without license from IHS
Not for Resale

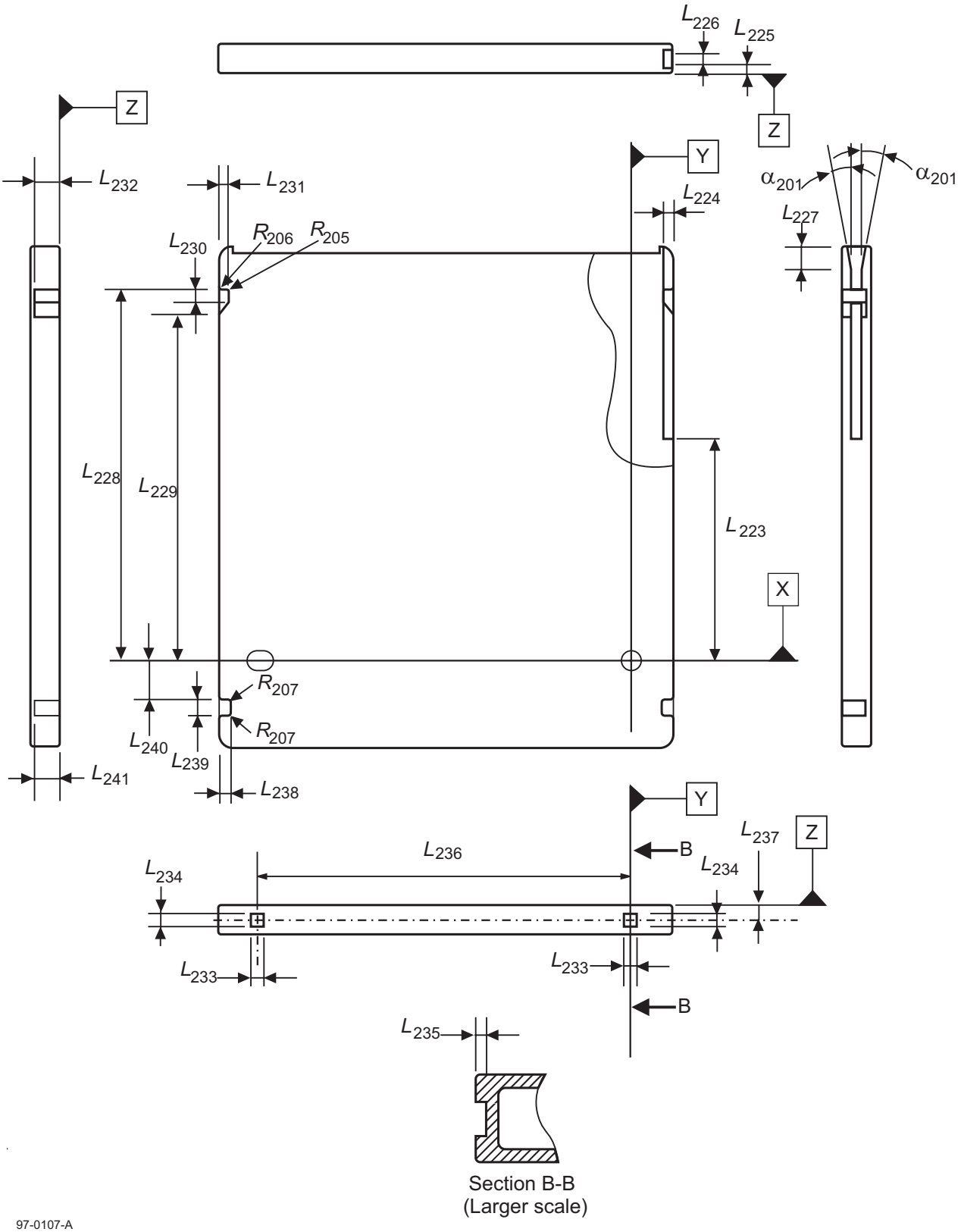

Figure 18 - Insertion slot, detents and gripper slots

© ISO/IEC 2004 – All rights reserved
Copyright International Organization for Standardization
Reproduced by IHS under license with ISO
No reproduction or networking permitted without license from IHS
Not for Resale

Figure 19 - Write-inhibit hole, sensor holes and sensing areas

© ISO/IEC 2004 All rights reserved

Copyright International Organization for Standardization
Reproduced by IHS under license with ISO
No reproduction or networking permitted without license from IHS
Not for Resale

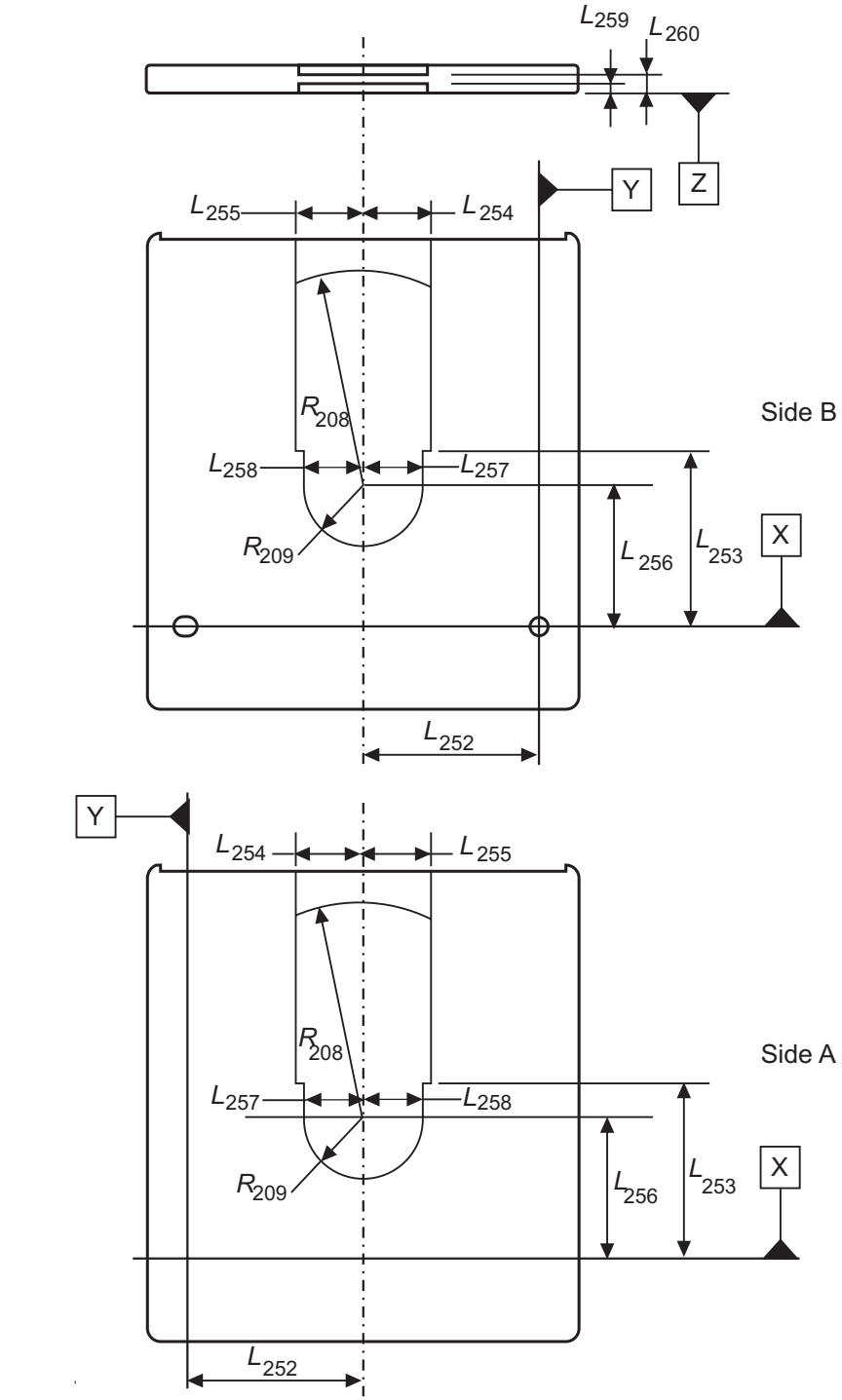

Figure 20 - Spindle and head window

© ISO/IEC 2004 – All rights reserved
Copyright International Organization for Standardization
Reproduced by IHS under license with ISO
No reproduction or networking permitted without license from IHS
Not for Resale

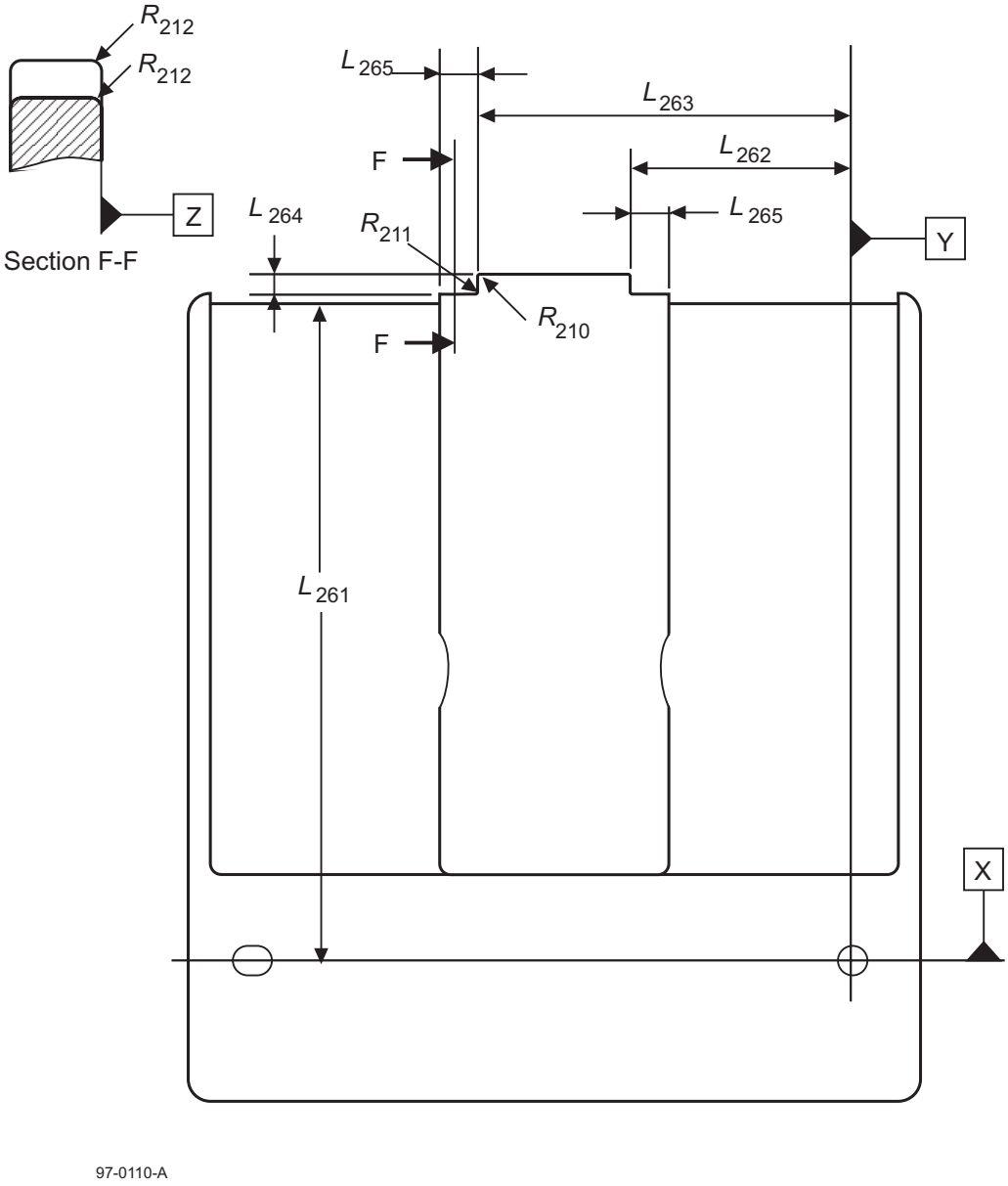

Figure 21 - Shape of the shutter

© ISO/IEC 2004 All rights reserved
Copyright International Organization for Standardization
Reproduced by IHS under license with ISO
No reproduction or networking permitted without license from IHS
Not for Resale

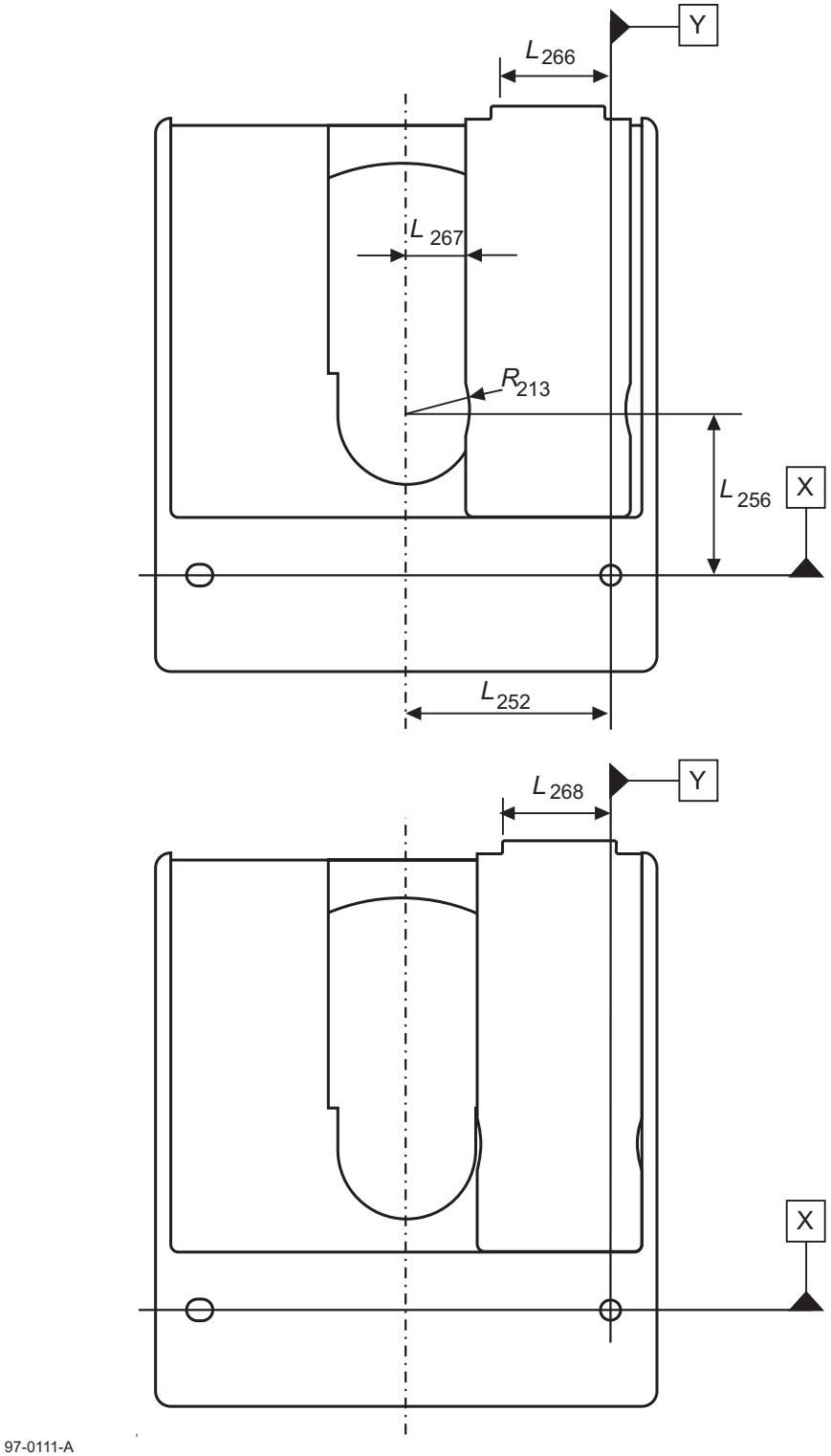

Figure 22 - Shutter in just right-hand open position (top view) and maximum right-hand open position (bottom view)

Copyright International Organization for Standardization
Reproduced by IHS under license with ISO
No reproduction or networking permitted without license from IHS
© ISO/IEC 2004 – All rights reserved
Not for Resale

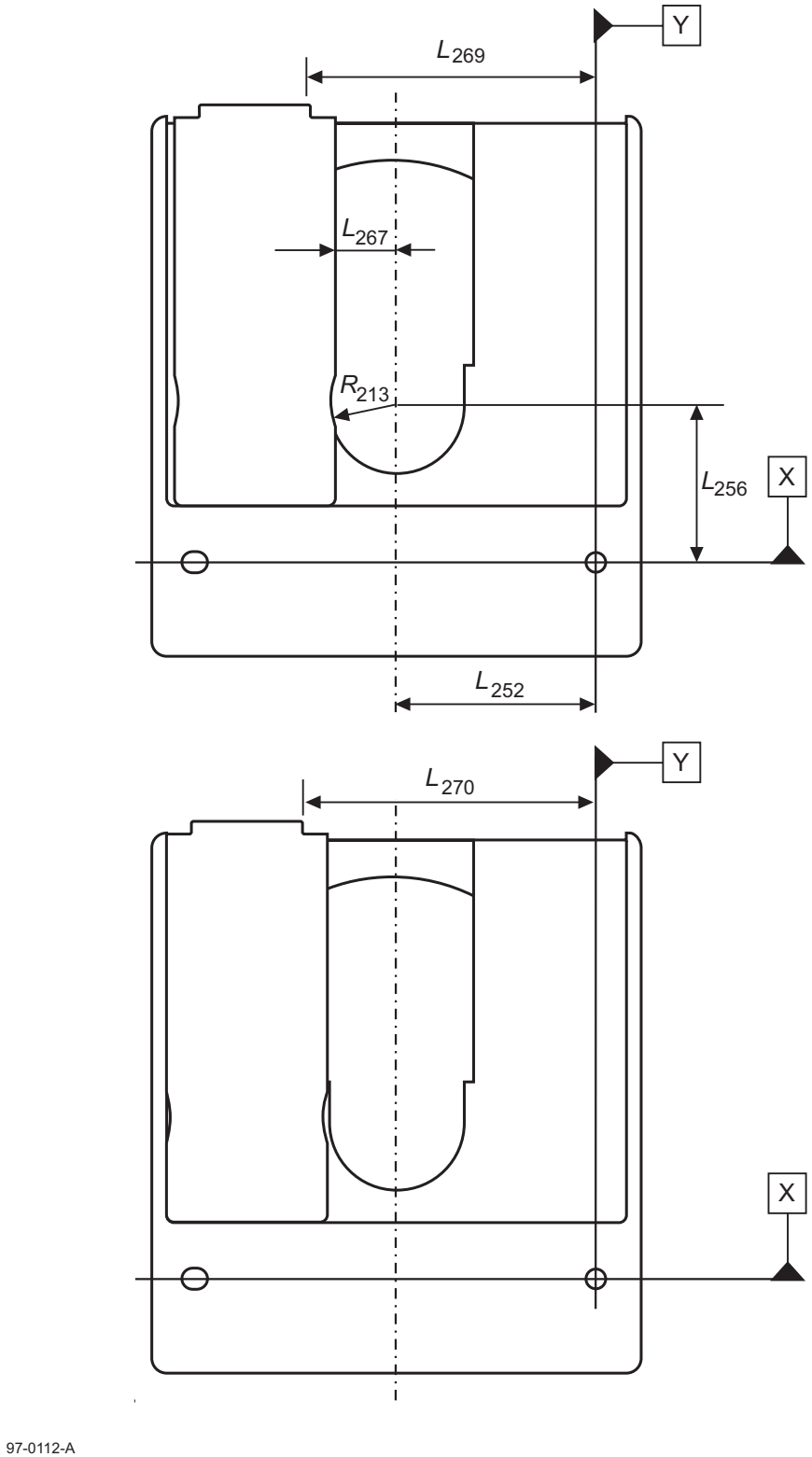

Figure 23 - Shutter in just left-hand open position (top view) and maximum left-hand open position (bottom view)

© ISO/IEC 2004 All rights reserved
Copyright International Organization for Standardization
Reproduced by IHS under license with ISO
No reproduction or networking permitted without license from IHS
Not for Resale

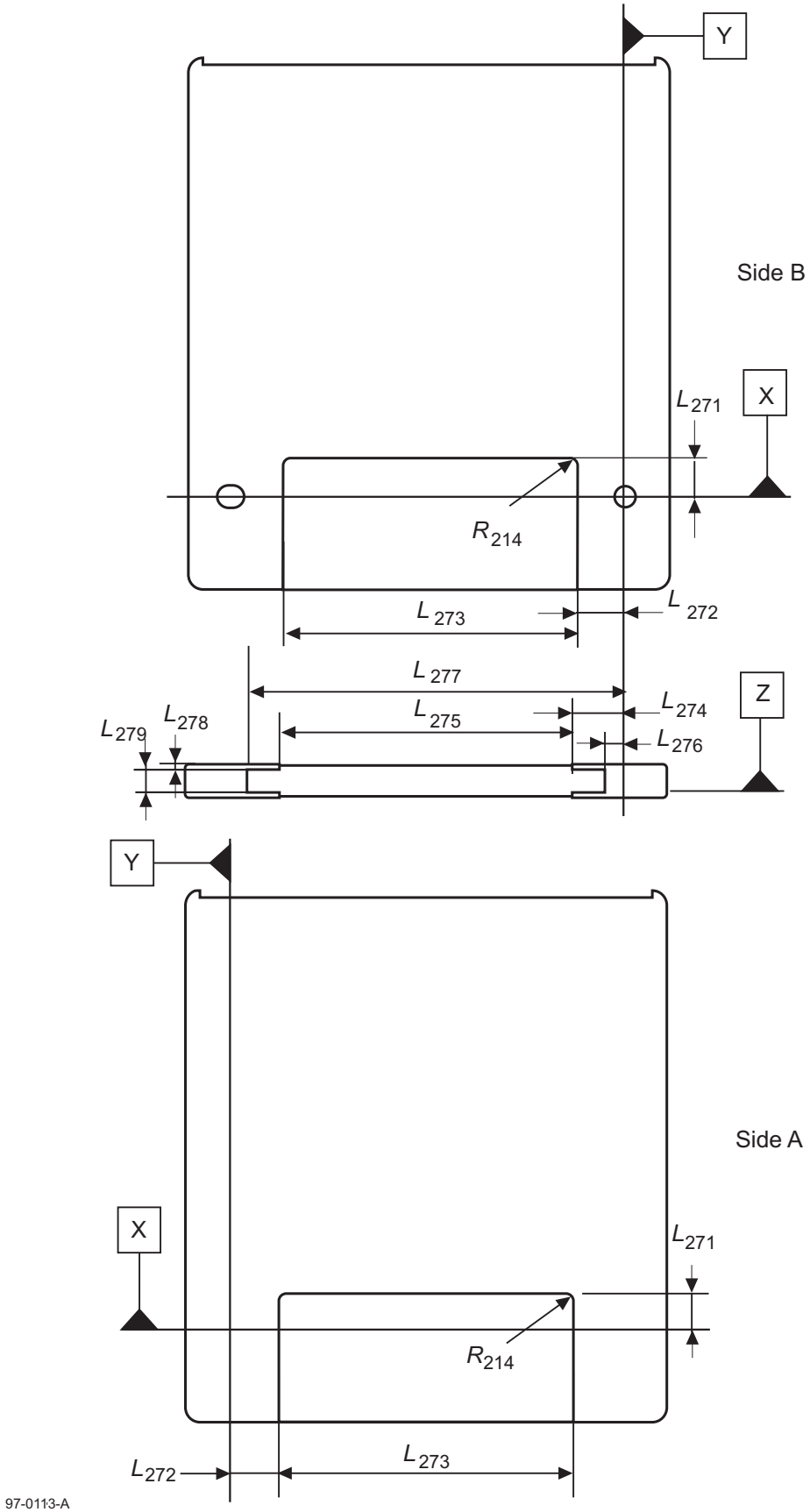

Figure 24 - Label areas

Copyright International Organization for Standardization
Reproduced by IHS under license with ISO
No reproduction or networking permitted without license from IHS
Not for Resale
© ISO/IEC 2004 – All rights reserved

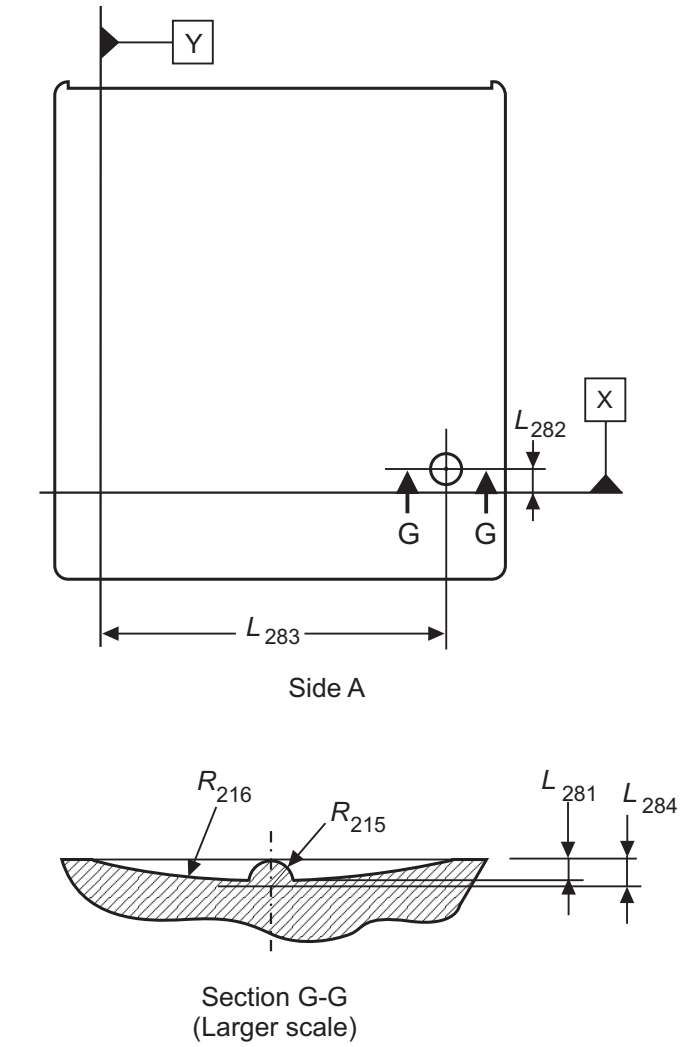

Figure 25 - Identification mark of Side A

8.3 Dimensions of the Type 3 case

The dimensions of the Type 3 case shall be measured in the test environment (see 7.1.1). The dimensions of the case in an operating environment (see 7.1.2) can be estimated from the dimensions specified in this clause.

The dimensions of the case are identical with those of the Type 2 case. See 8.2.

The following clauses specify different features from the Type 2 case.

8.3.1 Sensor holes

The functions identified by the states of the sensor holes are specified in table 3.

© ISO/IEC 2004 All rights reserved

Copyright International Organization for Standardization
Reproduced by IHS under license with ISO
No reproduction or networking permitted without license from IHS
Not for Resale

Table 3 – States of the sensor holes

Sensor hole	Function		State
	Closed	Open	
A1	Not permitted	There may or may not be a disk within the case	Open
A2	Active side	Not permitted	Closed
A3	Reserved for future standardization		Closed

8.3.2 Opening and opening cover for taking the disk out of the case

The case shall have an opening and an opening cover for taking a disk out or putting one in. The opening cover can be opened and closed freely.

A sample of an opening cover is shown in annex H.

8.4 Dimensions of the Type 4 case

The dimensions of the Type 4 case shall be measured in the test environment (see 7.1.1). The dimensions of the case in an operating environment (see 7.1.2) can be estimated from the dimensions specified in this clause.

The dimensions of the case are identical with those of the Type 1 case. See 8.1.

The following clauses specify different features from the Type 1 case.

8.4.1 Sensor holes

The functions identified by the states of the sensor holes are specified in table 4.

Table 4 - States of the sensor holes

Sensor hole	Function		State
	Closed	Open	
A1	The original disk has not been taken out	The original disk has been taken out or a disk has been put in	Closed / Open
A2	Active side	Not permitted	Closed
A3	Reserved for future standardization		Closed
B1	The original disk has not been taken out	The original disk has been taken out or a disk has been put in	Closed / Open
B2	Active side	Not permitted	Closed
B3	Reserved for future standardization		Closed

8.4.2 Opening and opening cover for taking the disk out of the case

Type 4 case shall have an opening closed by a cover. In the original condition the case contains a disk and the cover is locked in closed position. Sensor hole A1 and B1 shall be closed. In order to take out the disk, sensor hole A1 and B1 shall be opened, then the cover can be opened and the disk removed from the case. Once sensor hole A1 and B1 have been opened, it always remains open whether or not the same disk or another disk has been introduced into the case.

This International Standard does not specify the design of the opening and of the cover. They should be designed so as not to damage the disk. An example of a cover is shown in annex H.

© ISO/IEC 2004 – All rights reserved
Copyright International Organization for Standardization
Reproduced by IHS under license with ISO
No reproduction or networking permitted without license from IHS
Not for Resale

8.5 Dimensions of the Type 5 case

The dimensions of the Type 5 case shall be measured in the test environment (see 7.1.1). The dimensions of the case in an operating environment (see 7.1.2) can be estimated from the dimensions specified in this clause.

The dimensions of the case are identical with those of the Type 1 case. See 8.1.

The following clauses specify different features from the Type 1 case.

8.5.1 Sensor holes

The functions identified by the states of the sensor holes are specified in table 5.

Table 5 - States of the sensor holes

Sensor hole	Function		States
	Closed	Open	
A1	Not permitted	There may or may not be a disk within the case	Open
A2	Active side	Not permitted	Closed
A3	Reserved for future standardization		Closed
B1	Not permitted	There may or may not be a disk within the case	Open
B2	Active side	Not permitted	Closed
B3	Reserved for future standardization		Closed

8.5.2 Opening and opening cover for taking the disk out of the case

The case shall have an opening and an opening cover for taking a disk out or putting one in. The opening cover can be opened and closed freely.

A sample of an opening cover is shown in annex H.

9 Mechanical characteristics

9.1 Material

The case shall be constructed from any suitable materials such that it meets the requirements of this International Standard.

9.2 Mass

The mass of the case without the disk shall not exceed 100 g.

9.3 Edge distortion

The cartridge shall meet the requirement of the edge distortion test defined in annex B.

9.4 Compliance

The case shall meet the requirement of the compliance (flexibility) test defined in annex C.

9.5 Shutter opening force

The spring force on the shutter shall be such that the force required to open the shutter does not exceed 2,0 N. It shall be sufficiently strong to close a free-sliding shutter, irrespective of the orientation of the case.

© ISO/IEC 2004 All rights reserved

Copyright International Organization for Standardization
Reproduced by IHS under license with ISO
No reproduction or networking permitted without license from IHS
Not for Resale

10 Interface between the case used as cartridge and a drive

10.1 Capture cylinder (Figure 26)

The capture cylinder is defined as the volume within which the spindle can expect the centre of the disk hole to be, just prior to capture, and with the cartridge constrained as specified in 9.4. The size of the cylinder defines the permissible play of the disk inside its cavity in the case. The cylinder is referred to perfectly located and perfectly sized alignment and location pins in the drive; it includes the tolerances of those dimensions of the case and the disk which are between the two pins mentioned and the centre of the disk.

The bottom of the cylinder shall be parallel to, and above, Reference Plane Z at a distance

L_{301} = 2,1 mm min.

The top of the cylinder shall be located at a distance

L_{302} = 5,2 mm max.

from Reference Plane Z. The diameter of the cylinder shall be

D_{301} = 2,8 mm max.

and its centre shall be given by the nominal values of L_{150} and L_{154} for Type 1, Type 4 and Type 5; or by L_{254} and L_{258} for Type 2 and or Type 3 cases, in the drive.

--`,,`-`-`,,`,,`,`,,`---
© ISO/IEC 2004 – All rights reserved
Copyright International Organization for Standardization
Reproduced by IHS under license with ISO
No reproduction or networking permitted without license from IHS
Not for Resale

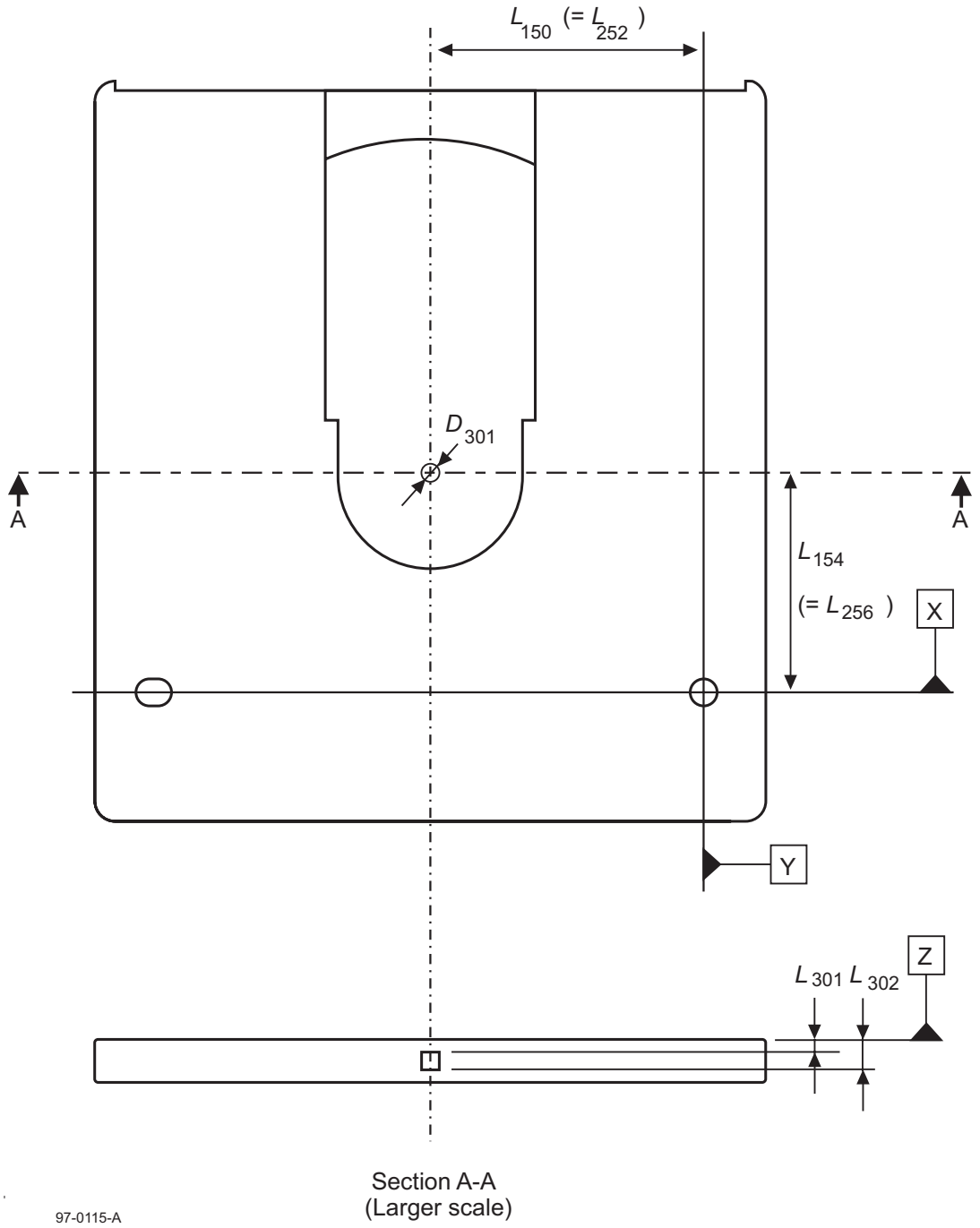

Figure 26 - Capture cylinder

10.2 Inner dimensions of the case (Figure 27)

The inner space of the disk shall be such that the disk is not in contact with the case during operation. The inner shape of the case shall meet the following requirements.

L_{303} = 2,2 mm max.

L_{304} = 2,5 mm max.

L_{305} = 5,4 mm min.

© ISO/IEC 2004 All rights reserved

Copyright International Organization for Standardization
Reproduced by IHS under license with ISO
No reproduction or networking permitted without license from IHS
Not for Resale

L_{306} = 5,7 mm min.

measured from Reference Plane Z and

R_{301} = 22,0 mm max.

R_{302} = 60,7 mm min.

from a centre given by the nominal values of L_{150} and L_{154} of Type 1 case, Type 4 case or Type 5 case, or L_{254} and L_{258} of Type 2 and Type 3 cases.

11 Orientation of the disk in the case

11.1 Two-sided disk (Type 2S) in case Types 1, 4 and 5

The disk surfaces are defined as Side A and Side B. Sides A and B of the case are identical as far as the features specified in this International Standard are concerned. The two-sided disk (Type 2S) has no specific orientation in the case. Therefore, references to Sides A and B of the case can be changed to B and A respectively.

11.2 One-sided disk (Type 1S) in case Types 1, 2 and 3

A one-sided disk (Type 1S) has only one functional entrance surface defined as Side A. The disk shall be oriented in the case so that when Side A of the case faces upwards, Side A of the disk faces downwards.

© ISO/IEC 2004 – All rights reserved
Copyright International Organization for Standardization
Reproduced by IHS under license with ISO
No reproduction or networking permitted without license from IHS
Not for Resale

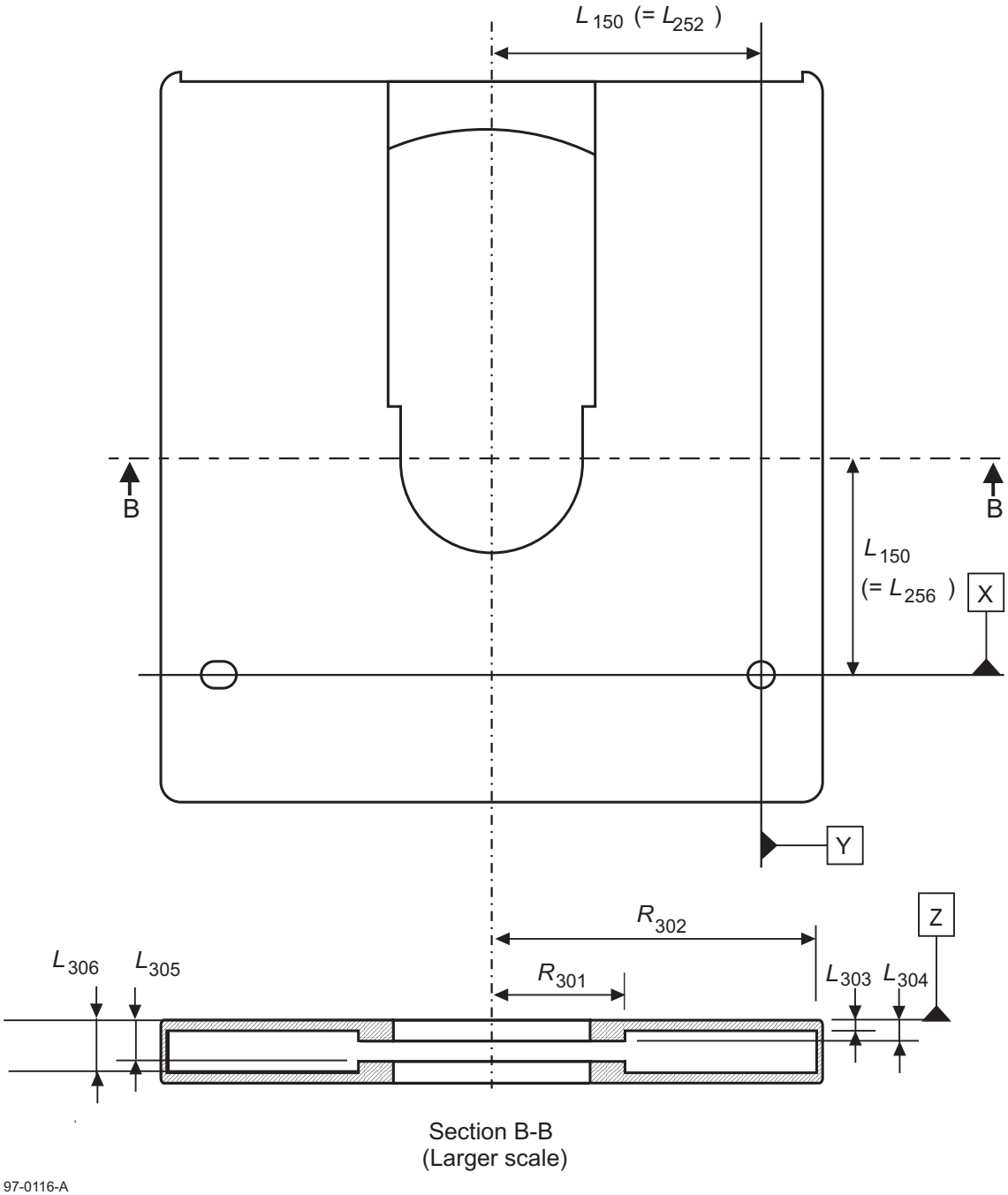

Figure 27 - Inner dimensions of the case

© ISO/IEC 2004 All rights reserved
Copyright International Organization for Standardization
Reproduced by IHS under license with ISO
No reproduction or networking permitted without license from IHS
Not for Resale

Section 3 - Dimensional and Mechanical characteristics of the case for 80 mm disk

12 Dimensional characteristics

The dimensions of the case shall be referred to three orthogonal Reference Planes X, Y and Z. The case shall be constrained such that four reference surfaces S1 to S4 on Side B of the case lie in Reference Plane Z. The intersection of the three planes defines the centre of the location hole. The centre of the alignment hole shall lie on the intersection of Reference Planes X and Z. Refer to annex D. A dimension of a feature referenced to one of the planes is the shortest distance from the feature to the plane.

Side A of the Type 6 and the Type 8 cases are referred to the three orthogonal Reference Planes X, Y' and Z', where

Y' is a plane parallel to Reference Plane Y at a nominal distance of 74,0 mm,

Z' is a plane parallel to Reference Plane Z at a nominal distance of 5,4 mm.

12.1 Dimensions of the Type 6 case

The dimensions of the Type 6 case shall be measured in the test environment (see 7.1.1). The dimensions of the case in an operating environment (see 7.1.2) can be estimated from the dimensions specified in this clause.

12.1.1 Overall dimensions (Figure 28)

The total length of the case shall be

L_{101} = 91,0 mm ± 0,3 mm.

The distance from the top of the case to Reference Plane X shall be

$L_{102} = 77{,}0\ \text{mm}\ ^{+\ 0{,}3\ \text{mm}}_{-\ 0{,}2\ \text{mm}}$

with the width

L_{103} = 2,0 mm min.

from the left-hand and right-hand edges of the case.

The distance from the bottom of the case to Reference Plane X shall be

L_{104} = 14,0 mm ± 0,2 mm.

The total width of the case shall be

L_{105} = 89,0 mm ± 0,2 mm

The distance from the left-hand side of the case to Reference Plane Y shall be

L_{106} = 7,5 mm ± 0,2 mm

The distance from the right-hand side of the case to Reference Plane Y shall be

L_{107} = 81,5 mm ± 0,3 mm

The four corners shall be rounded off with a radius of

R_{101} = 2,5 mm ± 0,1 mm.

In the zones delimited by

L_{108} = 6,0 mm

© ISO/IEC 2004 – All rights reserved
Copyright International Organization for Standardization
Reproduced by IHS under license with ISO
No reproduction or networking permitted without license from IHS
Not for Resale

from the left-hand and right-hand edges of the case, there shall be the continuous guide areas running from the top to Reference Plane X of the case, with a width

L_{109} = 0,7 mm min.

The thickness of the case shall be

$L_{110} = 5{,}4\ \text{mm}\ ^{+\ 0{,}2\ \text{mm}}_{-\ 0{,}1\ \text{mm}}$.

The eight long edges of the case shall be rounded off with a radius

R_{102} = 0,4 mm ± 0,1 mm.

The flat area width of the top shall be

L_{111} = 0,5 mm max.

12.1.2 Location hole (Figure 28)

The centre of the location hole shall coincide with the intersection of Reference Planes X, Y and Z.

The diameter of the hole shall be

$D_{101} = 3{,}00\ \text{mm}\ ^{+\ 0{,}05\ \text{mm}}_{0{,}00\ \text{mm}}$

Its depth shall be

L_{112} = 0.8 mm min.

The room below the location hole shall be free up to

L_{113} = 4,0 mm min.

below Reference Plane Z.

The diameter of the free room shall be at least equal to D_{101}.

The lead-in edges shall be rounded off with a radius

$R_{103} = 0{,}3\ \text{mm}\ ^{+\ 0{,}1\ \text{mm}}_{-\ 0{,}0\ \text{mm}}$.

12.1.3 Alignment hole (Figure 28)

The centre of the alignment hole shall lie on the intersection of the Reference Planes X and Z at a distance

L_{114} = 74,0 mm ± 0,2 mm

from Reference Plane Y.

The alignment hole shall have a substantially rectangular shape. Its dimensions shall be

$L_{115} = 3{,}00\ \text{mm}\ ^{+\ 0{,}05\ \text{mm}}_{-\ 0{,}00\ \text{mm}}$

$L_{116} = 3{,}8\ \text{mm}\ ^{+\ 0{,}2\ \text{mm}}_{-\ 0{,}0\ \text{mm}}$

Its depth shall be equal to L_{112}. The room below the alignment hole shall be free up to at least L_{113}. The dimensions of the free room shall be at least L_{115} and L_{116}.

The lead-in edges shall be rounded off with a radius R_{103}.

© ISO/IEC 2004 All rights reserved

Copyright International Organization for Standardization
Reproduced by IHS under license with ISO
No reproduction or networking permitted without license from IHS
Not for Resale

12.1.4 Reference surfaces (Figure 29)

There shall be four reference surfaces S1, S2, S3 and S4 on Side B of the case.

Surfaces S1 and S2 shall be rectangular with a width of

L_{117} = 6,0 mm min.

with the centre located at Reference Plane X and these corners shall be rounded off with a radius of

R_{104} = 3,0 mm min.

originating the centre of the location hole for surface S1 and the centre of the alignment hole for surface S2.

Surfaces S3 and S4 shall be rectangular with dimensions

L_{118} = 5,7 mm max.

L_{119} = 79,7 mm max.

from Reference Plane Y and

L_{120} = 64,0 mm max.

L_{121} = 72,0 mm min.

from Reference Plane X.

12.1.5 Mis-insertion protection slots (Figure 30)

The case shall have two symmetrical mis-insertion protection slots.

The edge of the slots shall be at a distance

L_{123} = 7,0 mm ± 0,3 mm

from Reference Plane X.

The slope start point measured from the edge shall be

L_{124} = 3,5 mm ± 0,2 mm.

The slope end point measured from the edge shall be

L_{125} = 1,0 mm ± 0,1 mm.

The depth measured from the edge of the case shall be

L_{126} = 2,0 mm ± 0,1 mm.

The inside edge corner of the slots shall be rounded off with a radius of

R_{105} = 0,5 mm max.

The outside edge corner of the slots shall be rounded off with a radius of

R_{106} = 0,3 mm ± 0,1 mm.

12.1.6 Detents (Figure 30)

The case shall have two semi-circular, symmetrical detents intended for autoloading.

The position and dimensions of these detents shall be

L_{220} = 3, mm ± 0,1 mm

originating from L_{221} and

L_{127} = 63,5 mm ± 0,3 mm

from Reference Plane X.

© ISO/IEC 2004 – All rights reserved
Copyright International Organization for Standardization
Reproduced by IHS under license with ISO
No reproduction or networking permitted without license from IHS
Not for Resale

The width of the detents shall be

L_{128} = 3,7 mm ± 0,1 mm

centre of which shall be located at

L_{129} = 2,7 mm ± 0,1 mm

from Reference Plane Z.

The outside edges of the detents shall be rounded off with a radius

R_{108} = 0,4 mm ± 0,1 mm.

The bottom of the case shall have two symmetrical detents intended for clamping a cartridge in case of vertical use. Their dimensions shall be

L_{130} = 2,0 mm ± 0,1 mm

L_{131} = 3,7 mm ± 0,2 mm

L_{132} = 0,7 mm ± 0,1 mm

The centre of one of these detents shall be at a distance

L_{133} = 5,5 mm ± 0,2 mm

from Reference Plane Y.

The centre of the other shall be at a distance

L_{134} = 68,5 mm ± 0,2 mm

from Reference Plane Y.

Both centres shall be at a distance

L_{135} = 2,7 mm ± 0,1 mm

from Reference Plane Z.

12.1.7 Write-inhibit hole (Figure 31)

The case shall have a write-inhibit hole on both Sides A and B. The write-inhibit hole shall have a device for opening and closing the hole. The hole on Side B of the case is the write-inhibit hole for Side A of the disk. The protected side of the disk shall be identified by an indication on the case, but the indication can be omitted when the device for opening and closing the hole for Side A of the disk can only be operated from Side A of the case.

When writing and erasing on Side A of the disk are not allowed, the write-inhibit hole shall be open. It shall have a diameter

D_{102} = 2,5 mm min.

The position of its centre on Side B shall be specified by

L_{136} = 11,5 mm ± 0,2 mm

L_{137} = 13,0 mm ± 0,2 mm

The hole shall extend below Reference Plane Z by

L_{138} = 4,0 mm min.

with a diameter equal at least to D_{102}.

When writing and erasing of the disk are allowed, the write-inhibit hole shall be closed by the write protect device.

The write protect device shall not be recessed from Reference Plane Z by

© ISO/IEC 2004 All rights reserved

Copyright International Organization for Standardization
Reproduced by IHS under license with ISO
No reproduction or networking permitted without license from IHS
Not for Resale

L_{139} = 0,8 mm $^{+\ 0,2\ mm}_{-\ 0,1\ mm}$

12.1.8 Sensor holes (Figure 31)

The case shall have three sensor holes on Side B. The set of holes on Side B of the case, A1, A2 and A3 pertains to Side A of the disk. The holes shall have a diameter of

D_{103} = 2,5 mm min.

and the positions of their centres shall be specified by L_{136} and

L_{140} = 2,0 mm ± 0,2 mm

L_{141} = 3,0 mm ± 0,2 mm

L_{142} = 8,0 mm ± 0,2 mm.

The room below the holes shall be free by

L_{143} = 4,0 mm min.

Reference Plane Z.

The diameter of the free room shall be at least equal to D_{103}. The holes shall be permitted to extend through Side A.

When a hole for Side A of the disk is closed, the closure shall not be recessed from Reference Plane Z by

L_{144} = 0,8 mm $^{+\ 0,2\ mm}_{-\ 0,1\ mm}$

The sensor hole A1 shall indicate whether or not the disk has been taken out of the case. The sensor hole A1 shall be originally closed, and once a disk has been taken out of the case, this hole shall remain permanently open.

Side A of the case shall have corresponding sensor holes B1, B2 and B3 with the diameter D_{103}.

The functions identified by the states of the sensor holes are specified in table 6.

Table 6 - States of the sensor holes

Sensor hole	Function		State
	Closed	Open	
A1	The original disk has not been taken out	The original disk has been taken out or a disk has been put in	Closed / Open
A2	Cartridge detection	Not permitted	Closed
A3	Reserved for future standardization		Closed
B1	The original disk has not been taken out	The original disk has been taken out or a disk has been put in	Closed / Open
B2	Cartridge detection	Not permitted	Closed
B3	Reserved for future standardization		Closed

12.1.9 Spindle and head window (Figure 32)

The dimensions of the window shall be referenced to a centreline, located at a distance

L_{145} = 37,0 mm ± 0,1 mm

from Reference Plane Y. The width of the window from the top of the case to

L_{146} = 40,0 mm max.

© ISO/IEC 2004 – All rights reserved
Copyright International Organization for Standardization
Reproduced by IHS under license with ISO
No reproduction or networking permitted without license from IHS
Not for Resale

shall be

L_{147} = 13,0 mm ± 0,1 mm

and

L_{148} = 13,0 mm ± 0,1 mm.

The top of the window shall be specified by

R_{109} = 40,7 mm min.

originating from the intersection of L_{145} and

L_{149} = 29,0 mm ± 0,1 mm.

The width of the window with the projection portion shall be

L_{150} = 10,0 mm min.

and

L_{151} = 10,0 mm min.

The width of the window at L_{149} shall be specified by

$$L_{152} = 13{,}7\ \text{mm}\ {}^{+\,0{,}2\ \text{mm}}_{-\,0{,}0\ \text{mm}}$$

and

$$L_{153} = 13{,}7\ \text{mm}\ {}^{+\,0{,}2\ \text{mm}}_{-\,0{,}0\ \text{mm}}$$

The bottom and the projection portion of the window shall be the arc specified by a radius

R_{110} = 14,0 mm min.

Its centre shall be defined by the intersection of L_{145} and L_{149}.

The area bounded by R_{109} and the top of the case shall be recessed from Reference Plane Z by

L_{154} = 1,3 mm min.

over the width of the window.

12.1.10 Shutter shape (Figure 33)

The case shall have a spring-loaded shutter completely covering the spindle and head windows when the case is not inside a drive. The shutter shall be free to slide in a recessed area of the case. The shutter shall not protrude beyond Reference Planes Z or Z' by more than 0,15 mm.

The shutter shall have an opener slot and a pair of opener edges against which the shutter opener of the drive can push to open the shutter. The shutter can be moved toward either the left or the right corresponding to the shutter opener mechanism.

The top of the shutter shall be located at

$$L_{155} = 77{,}0\ \text{mm}\ {}^{+\,0{,}3\ \text{mm}}_{-\,0{,}2\ \text{mm}}$$

from Reference Plane X.

The opener slot shall be defined by the dimensions

L_{156} = 5,0 mm ± 0,1 mm

© ISO/IEC 2004 All rights reserved

Copyright International Organization for Standardization
Reproduced by IHS under license with ISO
No reproduction or networking permitted without license from IHS
Not for Resale

$L_{157} = 2{,}2\ \text{mm}\ {}^{+\ 0{,}3\ \text{mm}}_{-\ 0{,}0\ \text{mm}}$

$L_{158} = 2{,}0\ \text{mm} \pm 0{,}1\ \text{mm}$

Its centre shall be specified by the intersection of two lines defined by

$L_{159} = 37{,}0\ \text{mm} \pm 0{,}2\ \text{mm}$

from Reference Plane Y and

$L_{160} = 2{,}7\ \text{mm} \pm 0{,}1\ \text{mm}$

from Reference Plane Z when the shutter is closed.

The outside edge corners shall be rounded off with a radius of

$R_{111} = 0{,}4\ \text{mm max.}$

The inside edge corners shall be rounded off with a radius of

$R_{112} = 0{,}4\ \text{mm max.}$

The right opener edge shall be defined by the dimensions

$L_{222} = 2{,}2\ \text{mm min.}$

$L_{164} = 2{,}2\ \text{mm} \pm 0{,}2\ \text{mm}$

Its centre shall be located at L_{160}.

When the shutter is closed, the right-hand opener edge shall be at

$L_{161} = 50{,}7\ \text{mm} \pm 0{,}3\ \text{mm}$

from Reference Plane Y.

The case shall have a pair of opener guides through which the opener edge can be pushed by the shutter opener of a drive.

Its projective figure viewed from the case side shall be defined by L_{164} and a width of

$L_{162} = 2{,}4\ \text{mm} \pm 0{,}2\ \text{mm}$

with the centre located at

$L_{163} = 2{,}7\ \text{mm} \pm 0{,}1\ \text{mm}$

from Reference Plane Z.

The corner of the opener guides shall be rounded off with a radius of

$R_{113} = 0{,}4\ \text{mm} \pm 0{,}1\ \text{mm.}$

12.1.11 Path for shutter opener (Figure 34)

When the left-hand edge position of the opener slot is

$L_{165} = 6{,}3\ \text{mm,}$

the shutter shall be open at

$L_{166} = 12{,}9\ \text{mm min.}$

and

$L_{167} = 13{,}7\ \text{mm min.}$

from L_{145}.

When the position of the right-hand opener edge is

© ISO/IEC 2004 – All rights reserved
Copyright International Organization for Standardization
Reproduced by IHS under license with ISO
No reproduction or networking permitted without license from IHS
Not for Resale

L_{168} = 22,5 mm,

the shutter shall be open at L_{166} and L_{167}.

The left-hand edge portion of the opener slot shall be

L_{169} = 5,9 mm max.

and the position of the right-hand opener edge shall be

L_{170} = 22,1 mm max.

when the shutter completely moves up.

12.1.12 Label areas (Figure 35)

The case shall have two label areas on Side A and Side B. Their dimensions shall be

L_{171} = 7,1 mm ± 0,2 mm

L_{172} = 5,0 mm ± 0,2 mm

L_{173} = 8,0 mm ± 0,2 mm

L_{174} = 66,0 mm ± 0,3 mm

R_{114} = 1,0 mm ± 0,2 mm

The label area shall be recessed by 0,2 mm min.

12.1.13 Identification marks for Sides A and B (Figure 36)

Side A and Side B shall be identified by an identification mark provided on a concave part on Side A and Side B, respectively. On Side A, this concave part presents a small round projection, on Side B two such projections are provided. The position and dimensions of these identification marks shall be as follows.

Side A

R_{115} = 0,4 mm $^{+\ 0,1\ mm}_{-\ 0,0\ mm}$

L_{176} = 0,4 mm $^{+\ 0,1\ mm}_{-\ 0,0\ mm}$

L_{177} = 10,2 mm ± 0,3 mm

L_{178} = 37,0 mm ± 0,4 mm

L_{179} = 0,5 mm $^{+\ 0,1\ mm}_{-\ 0,0\ mm}$

L_{180} = 9,0 mm ± 1,0 mm

L_{181} = 5,0 mm ± 0,5 mm

Side B

R_{115} = 0,4 mm $^{+\ 0,1\ mm}_{-\ 0,0\ mm}$

L_{176} = 0,4 mm $^{+\ 0,1\ mm}_{-\ 0,0\ mm}$

L_{177} = 10,2 mm ± 0,3 mm

--`,,`-`-`,,`,,`,`,,`---

© ISO/IEC 2004 All rights reserved
Copyright International Organization for Standardization
Reproduced by IHS under license with ISO
No reproduction or networking permitted without license from IHS
Not for Resale

L_{178} = 37,0 mm ± 0,4 mm

L_{179} = 0,5 $^{+\ 0,1\ mm}_{-\ 0,0\ mm}$

L_{180} = 9,0 mm ± 1,0 mm

L_{181} = 5,0 mm ± 0,5 mm

L_{182} = 3,0 mm ± 0,3 mm

12.1.14 Disk holder and body (Figures 37 and 38)

The case shall consist of a body and a disk holder to allow the removal or replacement of the disk. In the original condition, the disk holder shall be locked in the body and the sensor holes A1 and B1 closed.

When the status of the sensor holes A1 and B1 changes from closed to open, the disk holder holding a disk can be removed from the case. Once the status of the sensor holes A1 and B1 changes from closed to open, the open status is kept and can not be changed back to the closed status. The body and the disk holder shall be formed so as not damaging the read-out side of the disk.

The disk holder shall have a pair of holding arms with upper and lower flanges, a grip, a pair of lock levers with a lock portion and a pair of detents. A disk shall be supported among the holding arms and the grip. The disk shall not be removed from the disk holder by a releasing force of 0,35 N or less.

The dimensions of the disk holder shall be as follows, using the three orthogonal reference planes A, B and C.

Arm

L_{183} = 22,0 mm ± 0,2 mm

L_{184} = 79,0 mm ± 0,2 mm

L_{185} = 84,8 mm ± 0,1 mm

L_{186} = 74,0 mm ± 0,2 mm

L_{187} = 19,5 mm ± 0,2 mm

L_{188} = 70,0 mm ± 0,2 mm

L_{189} = 70,0 mm min. (The upper and lower flanges shall not lie within L_{189})

R_{116} = 38,5 $^{+\ 0,1\ mm}_{-\ 0,0\ mm}$

R_{117} = 40,7 $^{+\ 0,1\ mm}_{-\ 0,0\ mm}$

R_{118} = 42,4 mm ± 0,1 mm

L_{190} = 3,7 mm ± 0,05 mm

L_{191} = 2,9 mm ± 0,1 mm

L_{192} = 3,1 mm ± 0,05 mm

Grip

L_{193} = 43,0 mm ± 0,1 mm

L_{194} = 35,5 mm ± 0,1 mm

L_{195} = 32,0 $^{+\ 0,0\ mm}_{-\ 0,2\ mm}$

--`,,`-`-`,,`,,`,`,,`---
Copyright International Organization for Standardization
Reproduced by IHS under license with ISO
No reproduction or networking permitted without license from IHS
Not for Resale
© ISO/IEC 2004 – All rights reserved

L_{196} = 29,0 mm $^{+\ 0,0\ mm}_{-\ 0,2\ mm}$

L_{197} = 0,7 mm $^{+\ 0,0\ mm}_{-\ 0,2\ mm}$

L_{198} = 22,0 mm $^{+\ 0,0\ mm}_{-\ 0,2\ mm}$

L_{199} = 19,0 mm $^{+\ 0,0\ mm}_{-\ 0,2\ mm}$

R_{119} = 0,5 mm ± 0,1 mm

R_{120} = 1,2 mm ± 0,1 mm

L_{200} = 4,5 mm ± 0,1 mm

L_{201} = 3,1 mm ± 0,05 mm

L_{202} = 5,4 mm ± 0,05 mm

L_{203} = 3,0 mm $^{+\ 0,2\ mm}_{-\ 0,0\ mm}$

L_{204} = 20,0 mm ± 0,1 mm

L_{205} = 12,0 mm ± 0,1 mm

L_{206} = 0,1 mm $^{+\ 0,1\ mm}_{-\ 0,0\ mm}$

L_{207} = 0,5 mm $^{+\ 0,1\ mm}_{-\ 0,0\ mm}$

L_{208} = 1,9 mm ± 0,1 mm

Lock lever

L_{209} = 85,0 mm ± 0,1 mm

L_{210} = 34,5 mm ± 0,1 mm

L_{211} = 1,0 mm ± 0,1 mm

L_{212} = 1,0 mm $^{+\ 0,0\ mm}_{-\ 0,3\ mm}$

L_{213} = 1,85 mm $^{+\ 0,1\ mm}_{-\ 0,3\ mm}$

L_{214} = 4,0 mm ± 0,2 mm

L_{215} = 27,8 mm ± 0,2 mm

L_{216} = 36,0 mm ± 0,1 mm

L_{217} = 1,0 mm ± 0,1 mm

Detent

L_{218} = 20,0 mm ± 0,1 mm

© ISO/IEC 2004 All rights reserved

Copyright International Organization for Standardization
Reproduced by IHS under license with ISO
No reproduction or networking permitted without license from IHS
Not for Resale

R_{121} = 1,5 mm ± 0,1 mm

The body shall be formed to engage the lock portions and the grip of the disk holder, as an example shown in annex J.

The body shall have the mis-release protection function for the disk holder with dimensions of L_{123}, L_{124}, L_{125}, L_{126}, R_{105}, R_{106} and

L_{219} = 2,7 mm min.

as shown in figure 38.

The body shall be formed so as to enable to set the disk holder with its elastic deformation in the condition of entering the disk in the body.

© ISO/IEC 2004 – All rights reserved
Copyright International Organization for Standardization
Reproduced by IHS under license with ISO
No reproduction or networking permitted without license from IHS
Not for Resale

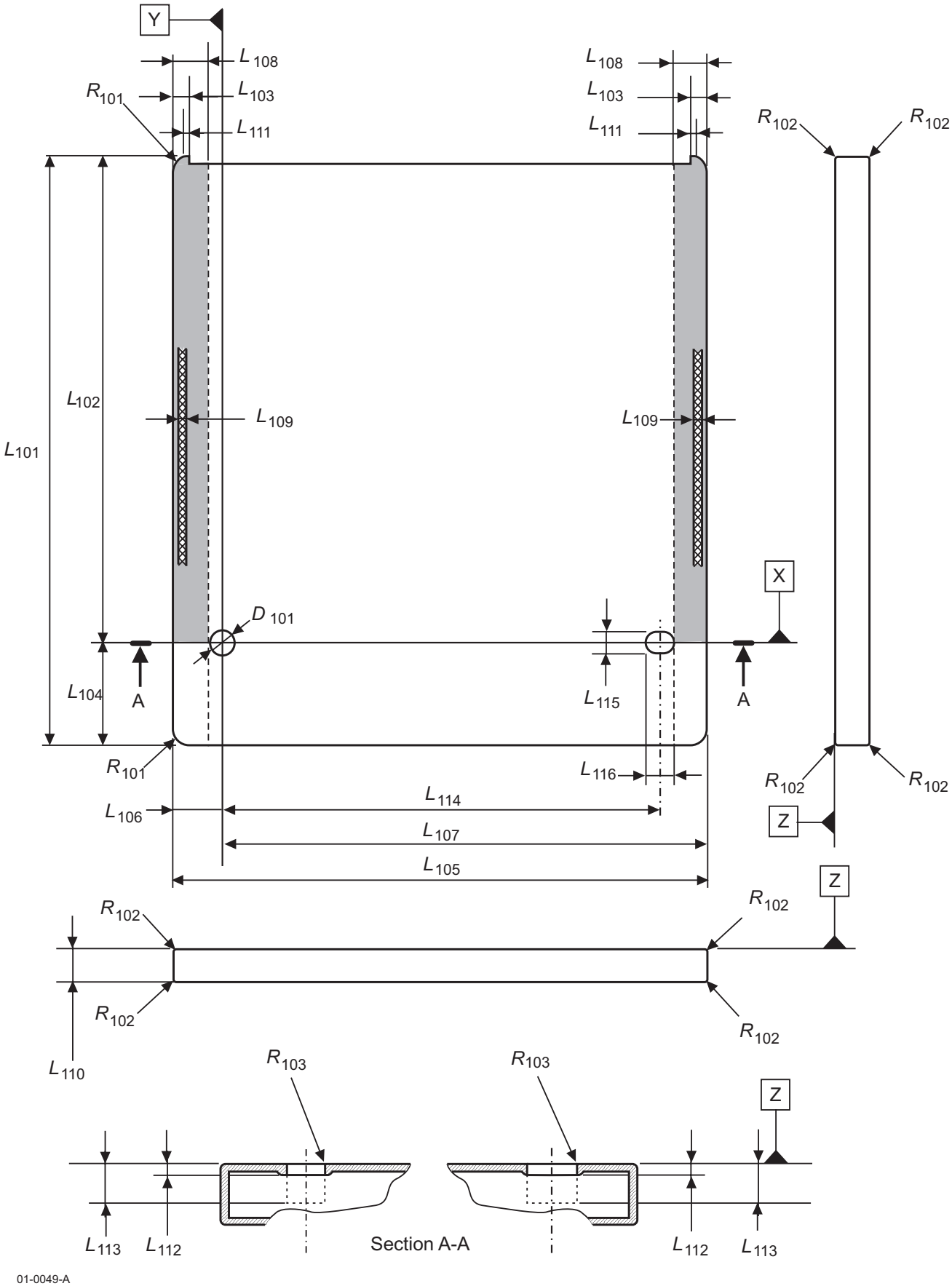

Figure 28 - Overall dimensions

© ISO/IEC 2004 All rights reserved
Copyright International Organization for Standardization
Reproduced by IHS under license with ISO
No reproduction or networking permitted without license from IHS
Not for Resale

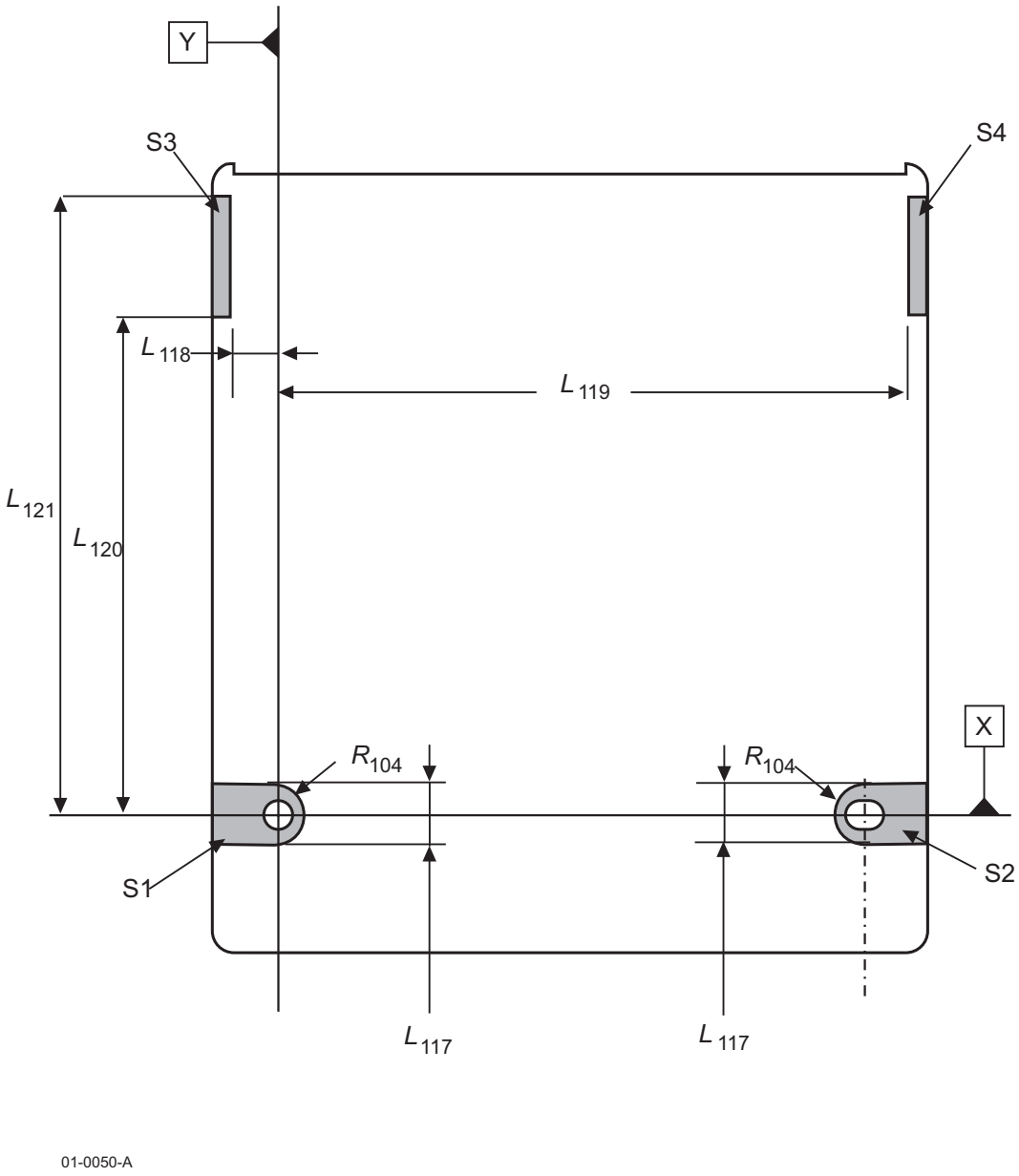

Figure 29 - Reference surfaces

© ISO/IEC 2004 – All rights reserved
Copyright International Organization for Standardization
Reproduced by IHS under license with ISO
No reproduction or networking permitted without license from IHS
Not for Resale

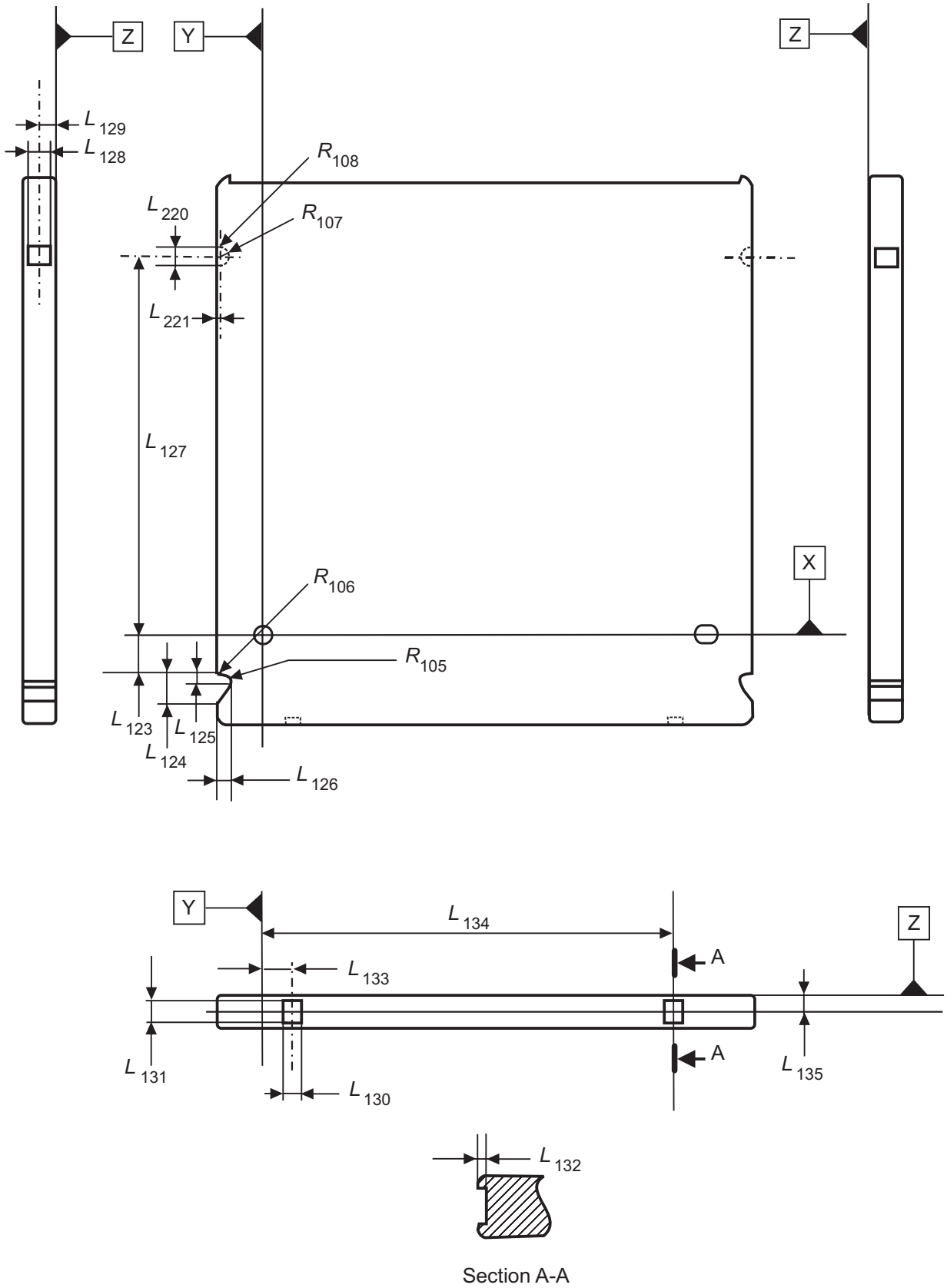

Figure 30 - Mis-insertion protection slots and detents

© ISO/IEC 2004 All rights reserved
Copyright International Organization for Standardization
Reproduced by IHS under license with ISO
No reproduction or networking permitted without license from IHS
Not for Resale

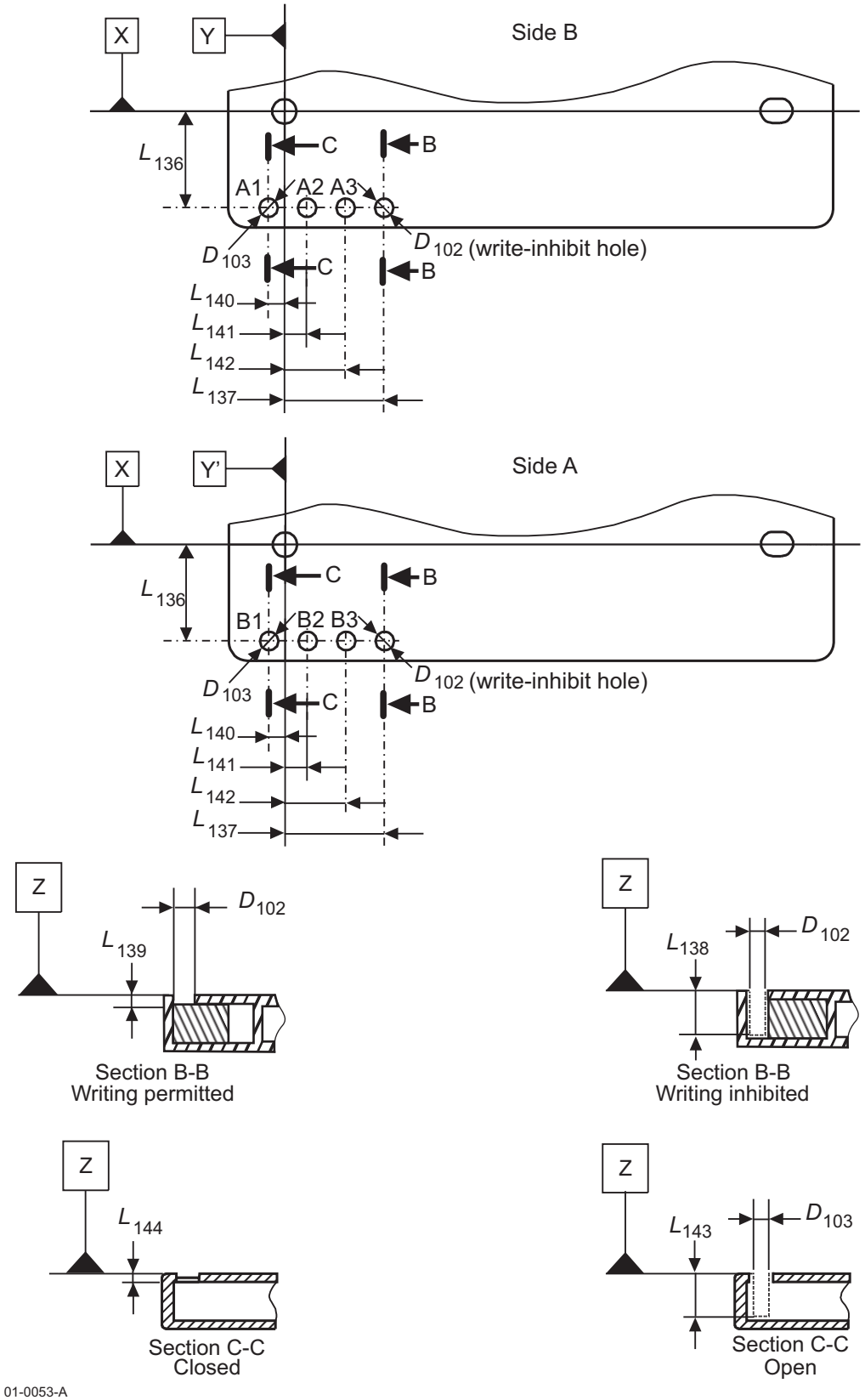

Figure 31 - Write-inhibit hole and sensor holes

Copyright International Organization for Standardization
Reproduced by IHS under license with ISO
No reproduction or networking permitted without license from IHS
© ISO/IEC 2004 – All rights reserved
Not for Resale

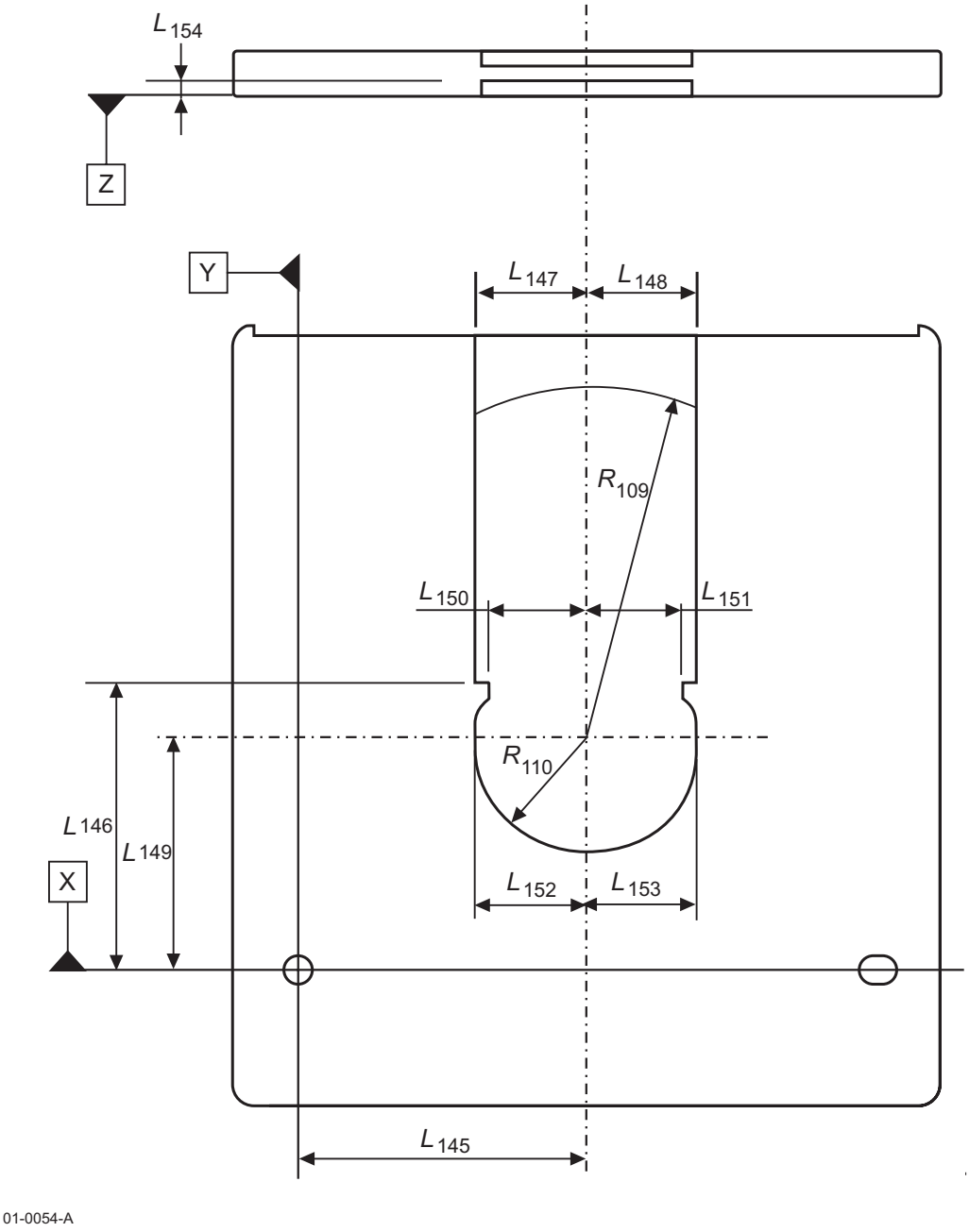

Figure 32 - Spindle and head window

© ISO/IEC 2004 All rights reserved

Copyright International Organization for Standardization
Reproduced by IHS under license with ISO
No reproduction or networking permitted without license from IHS
Not for Resale

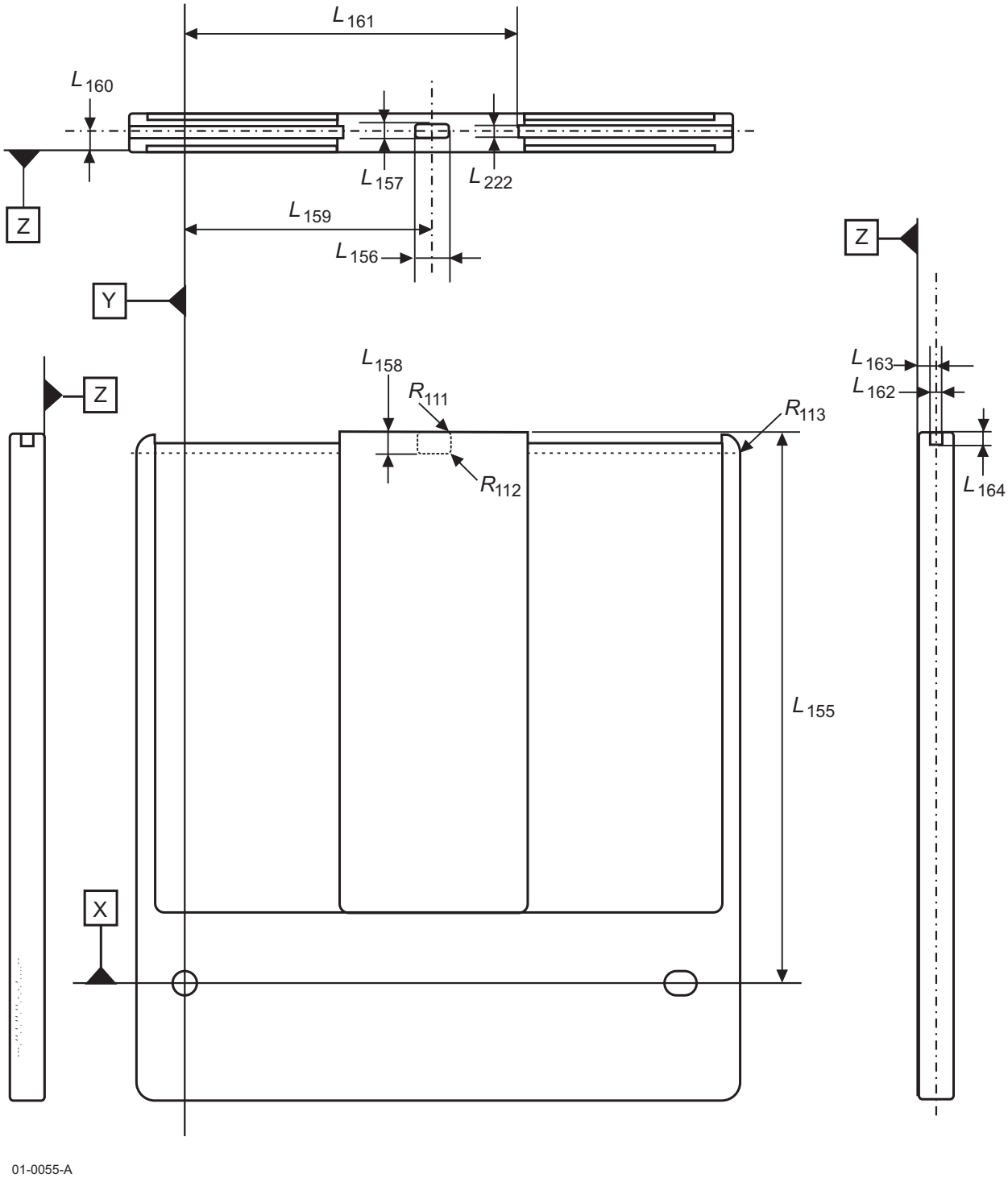

Figure 33 - Shape of the shutter

© ISO/IEC 2004 – All rights reserved
Copyright International Organization for Standardization
Reproduced by IHS under license with ISO
No reproduction or networking permitted without license from IHS
Not for Resale

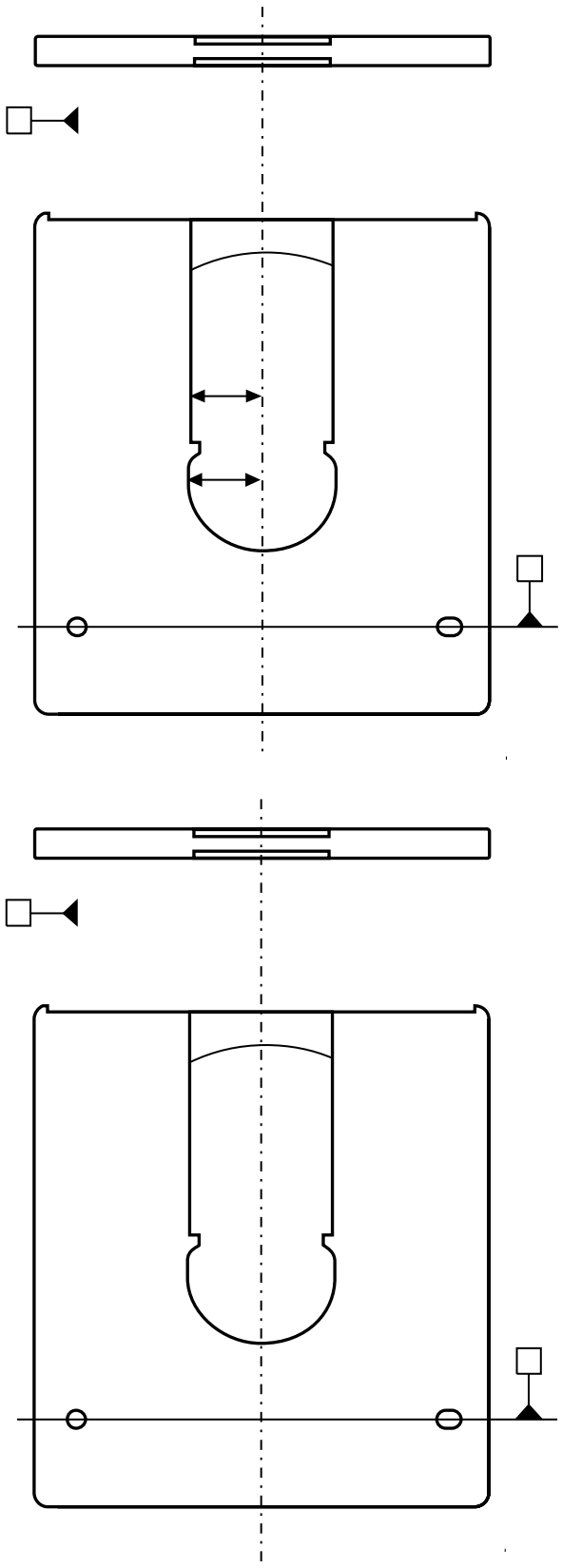

Figure 34 - Shutter in just open position (top view) and maximum open position (bottom view)

© ISO/IEC 2004 All rights reserved

Copyright International Organization for Standardization
Reproduced by IHS under license with ISO
No reproduction or networking permitted without license from IHS
Not for Resale

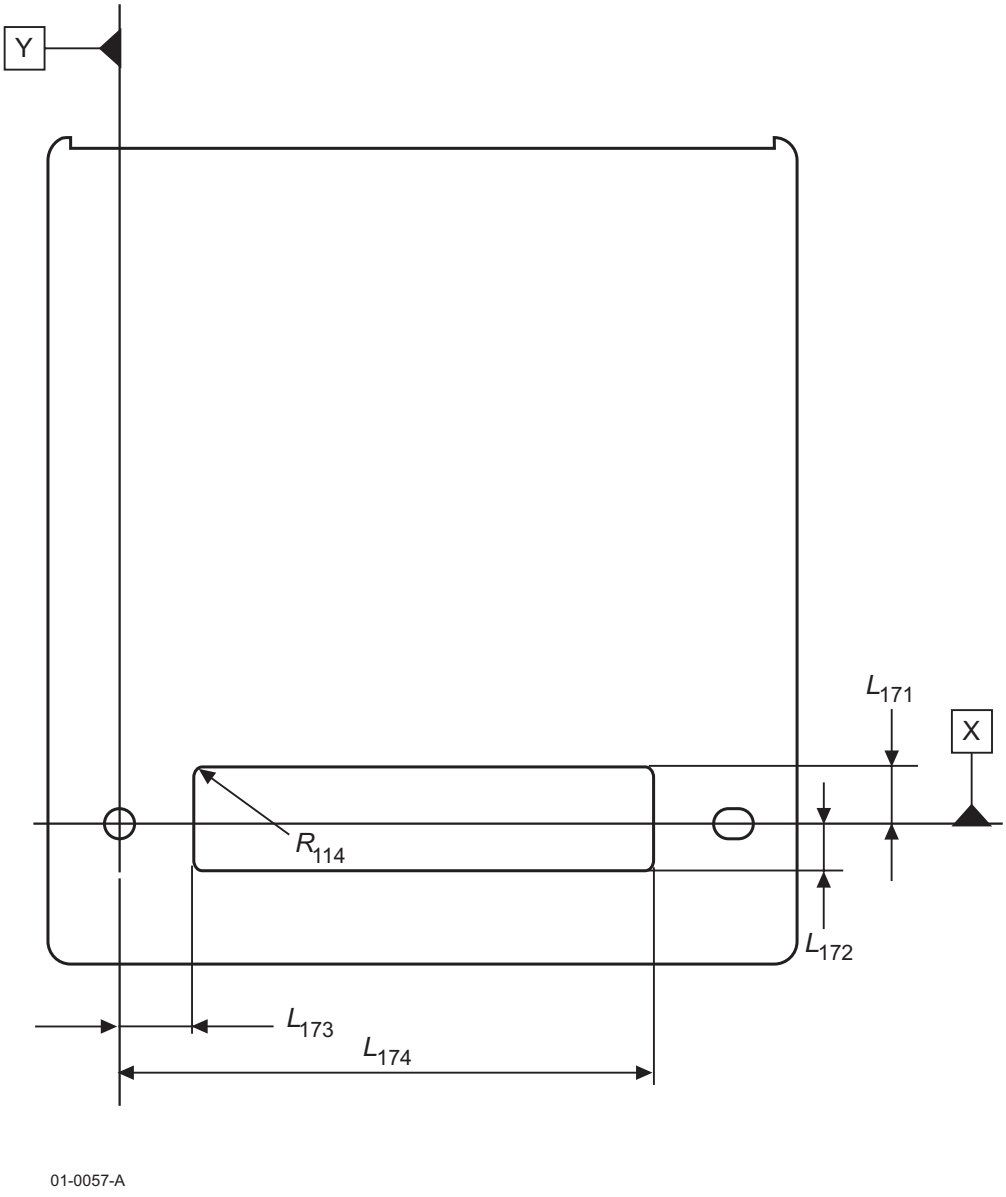

Figure 35 - Label areas

© ISO/IEC 2004 – All rights reserved
Copyright International Organization for Standardization
Reproduced by IHS under license with ISO
No reproduction or networking permitted without license from IHS
Not for Resale

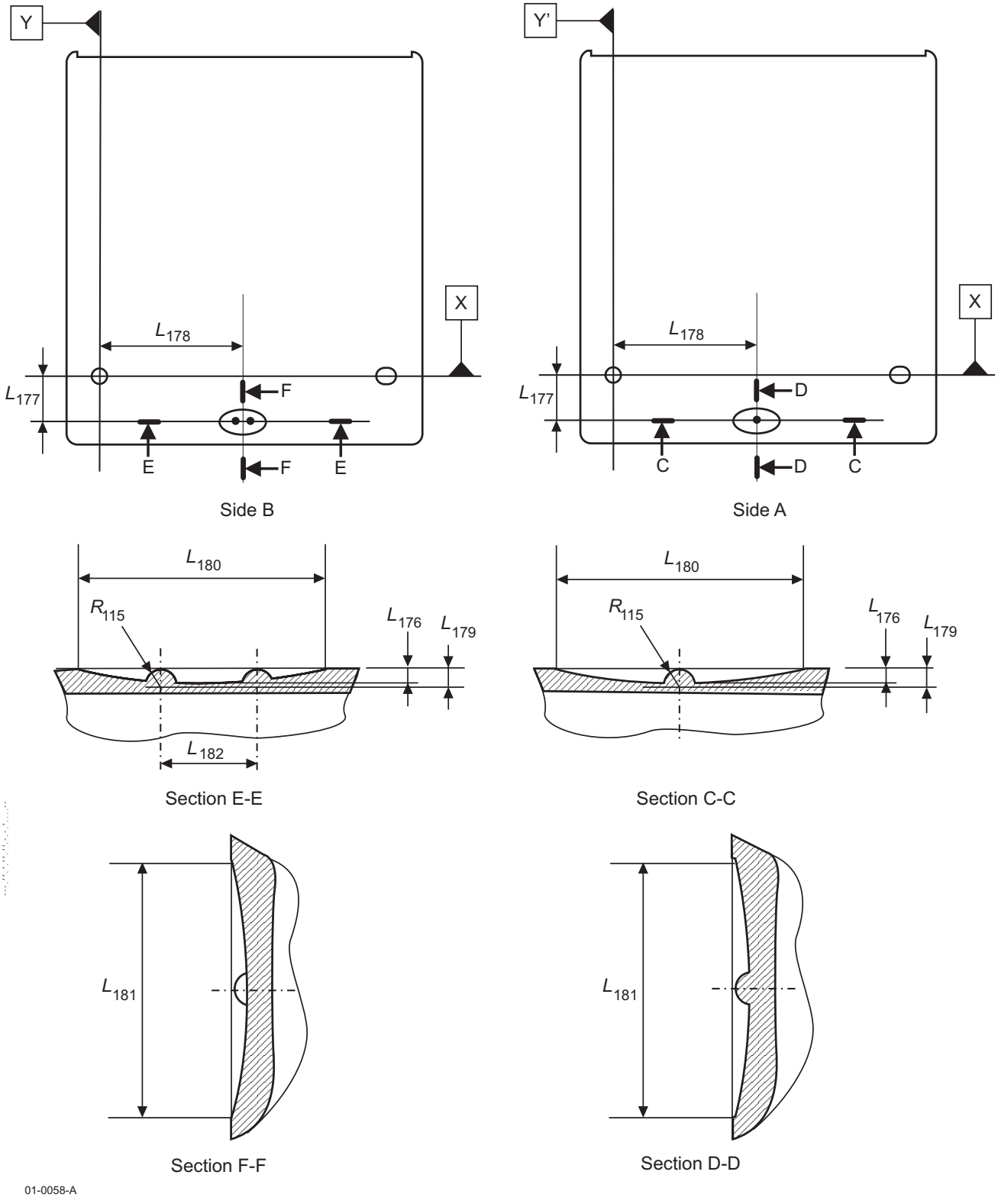

Figure 36 - Identification marks of Side A and B

© ISO/IEC 2004 All rights reserved

Copyright International Organization for Standardization
Reproduced by IHS under license with ISO
No reproduction or networking permitted without license from IHS
Not for Resale

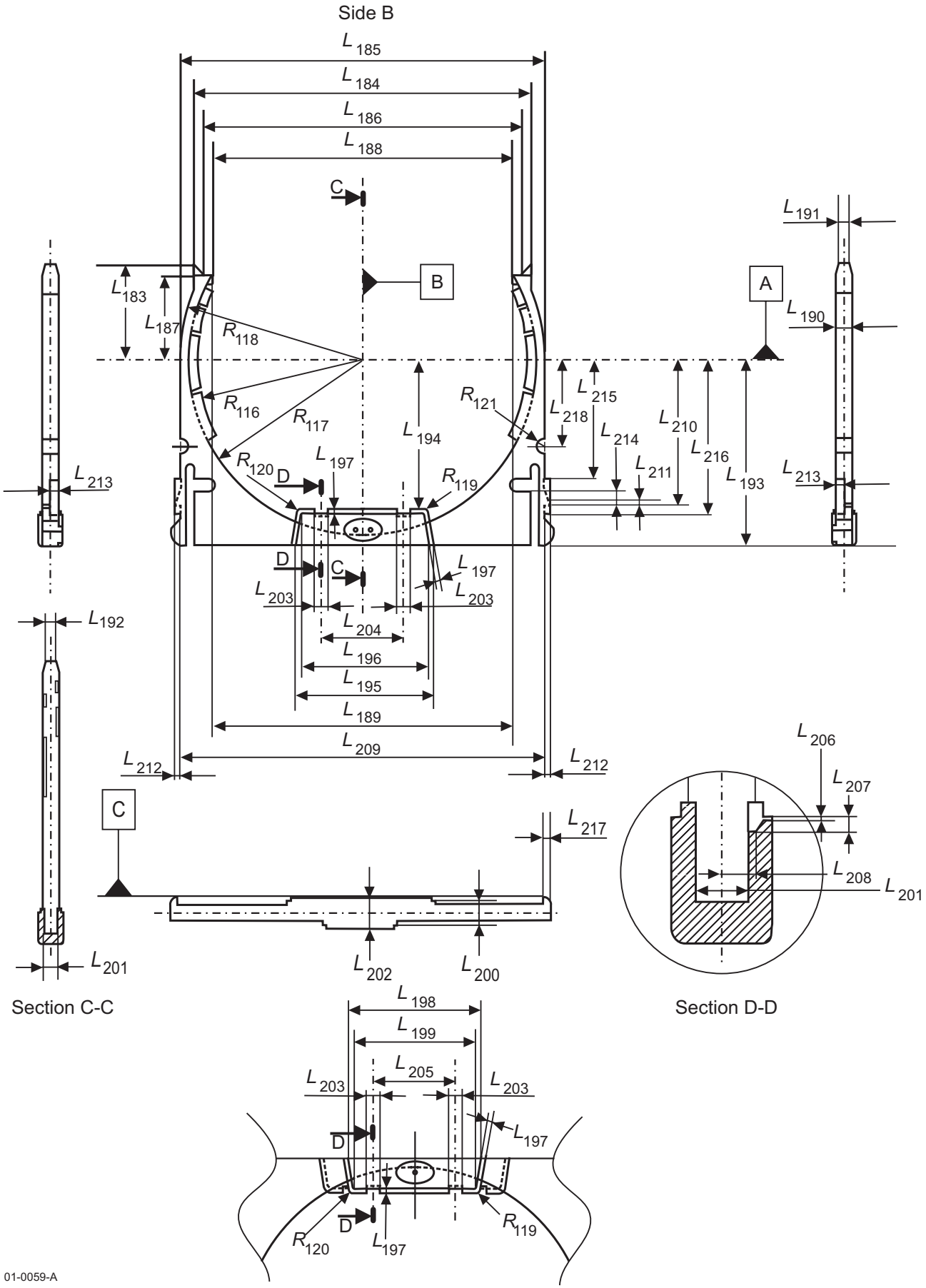

Figure 37 - Disk holder shape

© ISO/IEC 2004 – All rights reserved
Copyright International Organization for Standardization
Reproduced by IHS under license with ISO
No reproduction or networking permitted without license from IHS
Not for Resale

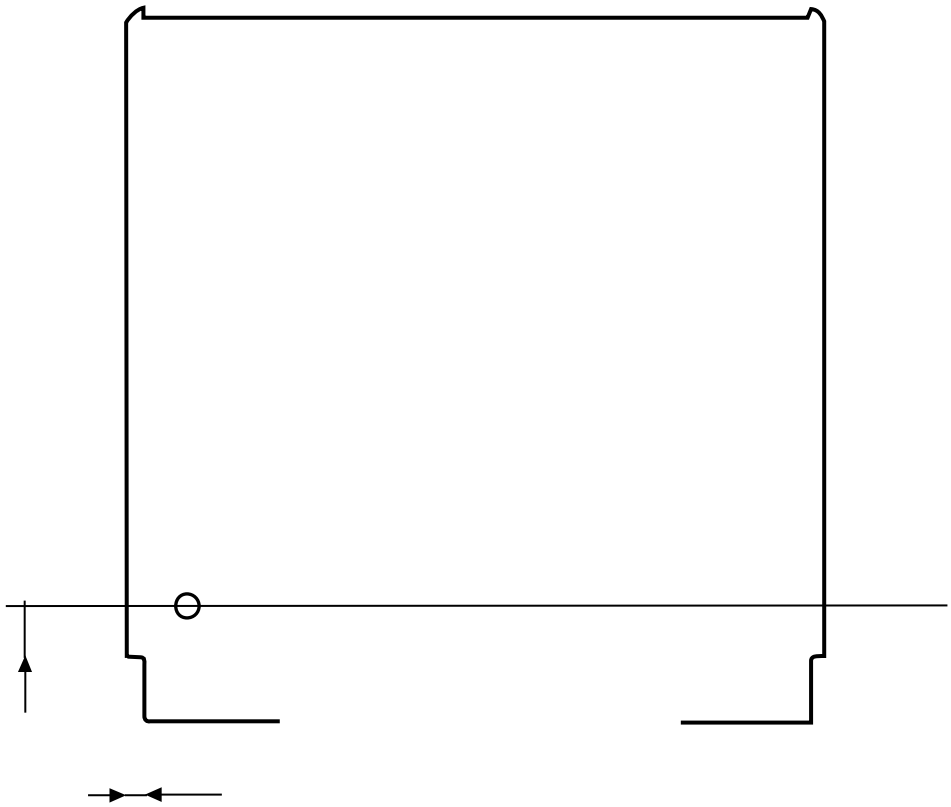

Figure 38 - Mis-release protection function of the body of the case

© ISO/IEC 2004 All rights reserved
Copyright International Organization for Standardization
Reproduced by IHS under license with ISO
No reproduction or networking permitted without license from IHS
Not for Resale

12.2 Dimensions of the Type 7 case

The dimensions of the Type 7 case shall be measured in the test environment (see 7.1.1). The dimensions of the case in an operating environment (see 7.1.2) can be estimated from the dimensions specified in this clause.

12.2.1 Overall dimensions (Figure 39)

The total length of the case shall be

L_{301} = 91,0 mm ± 0,3 mm.

The distance from the top of the case to Reference Plane X shall be

$L_{302} = 77{,}0\ \text{mm}\ {}^{+\ 0{,}3\ \text{mm}}_{-\ 0{,}2\ \text{mm}}$

with the width

L_{303} = 2,0 mm min.

from the left-hand and right-hand edges of the case.

The distance from the bottom of the case to Reference Plane X shall be

L_{304} = 14,0 mm ± 0,2 mm.

The total width of the case shall be

L_{305} = 89,0 mm ± 0,2 mm.

The distance from the left-hand side of the case to Reference Plane Y shall be

L_{306} = 7,5 mm ± 0,2 mm.

The distance from the right-hand side of the case to Reference Plane Y shall be

L_{307} = 81,5 mm ± 0,3 mm.

The four corners shall be rounded off with a radius

R_{301} = 2,5 mm ± 0,1 mm

In the zones delimited by

L_{308} = 6,0 mm

from the left-hand and right-hand edges of the case, there shall be the continuous guide areas running from the top to Reference Plane X of the case, with a width

L_{309} = 0,7 mm min.

The thickness of the case shall be

$L_{310} = 5{,}4\ \text{mm}\ {}^{+\ 0{,}2\ \text{mm}}_{-\ 0{,}1\ \text{mm}}$.

The eight long edges of the case shall be rounded off with a radius

R_{302} = 0,4 mm ± 0,1 mm.

The flat area width of the top shall be

L_{311} = 0,5 mm max.

12.2.2 Location hole (Figure 40)

The centre of the location hole shall coincide with the intersection of Reference Planes X, Y and Z.

© ISO/IEC 2004 – All rights reserved
Copyright International Organization for Standardization
Reproduced by IHS under license with ISO
No reproduction or networking permitted without license from IHS
Not for Resale

The diameter of the hole shall be

$$D_{301} = 3{,}00\ \text{mm}\ {}^{+\ 0{,}05\ \text{mm}}_{-\ 0{,}00\ \text{mm}}$$

Its depth shall be

L_{312} = 0,8 mm min.

The room below the location hole shall be free by

L_{313} = 4,0 mm min.

below Reference Plane Z.

The diameter of the free room shall be at least equal to D_{301}.

The lead-in edges shall be rounded off with a radius

$$R_{303} = 0{,}3\ \text{mm}\ {}^{+\ 0{,}1\ \text{mm}}_{-\ 0{,}0\ \text{mm}}$$

12.2.3 Alignment hole (Figure 40)

The centre of the alignment hole shall lie on the intersection of the Reference Planes X and Z at a distance

L_{314} = 74,0 mm ± 0,2 mm

from Reference Plane Y.

The alignment hole shall have a substantially rectangular shape. Its dimensions shall be

$$L_{315} = 3{,}00\ \text{mm}\ {}^{+\ 0{,}05\ \text{mm}}_{-\ 0{,}00\ \text{mm}}$$

$$L_{316} = 3{,}8\ \text{mm}\ {}^{+\ 0{,}2\ \text{mm}}_{-\ 0{,}0\ \text{mm}}$$

Its depth shall be equal to L_{312}. The room below the alignment hole shall be free by at least L_{313}. The dimensions of the free room shall be at least L_{315} and L_{316}.

The lead-in edges shall be rounded off with a radius R_{303}.

12.2.4 Reference surfaces (Figure 40)

There shall be four reference surfaces S1, S2, S3 and S4 on Side B of the case.

Surfaces S1 and S2 shall be rectangular with a width

L_{317} = 6,0 mm min.

with the centre located at reference plane X and these corners shall be rounded off with a radius

R_{304} = 3,0 mm min.

originating the centre of the location hole for surface S1 and the centre of the alignment hole for surface S2.

Surfaces S3 and S4 shall be rectangular with dimensions

L_{318} = 5,7 mm max.

L_{319} = 79,7 mm max.

from Reference Plane Y and

L_{320} = 64,0 mm max.

© ISO/IEC 2004 All rights reserved

Copyright International Organization for Standardization
Reproduced by IHS under license with ISO
No reproduction or networking permitted without license from IHS
Not for Resale

L_{321} = 72,0 mm min.

from Reference Plane X.

12.2.5 Mis-insertion protection slots (Figure 41)

The case shall have three mis-insertion protection slots, two of them located symmetrically at the bottom side of the case and the other located at the top right side of the case.

The edge of the slots at the bottom side shall be at a distance

L_{323} = 7,0 mm ± 0,3 mm

from Reference Plane X.

The slope start point measured from the edge shall be

L_{324} = 3,5 mm ± 0,2 mm.

The slope end point measured from the edge shall be

L_{325} = 1,0 mm ± 0,1 mm.

The depth measured from the edge of the case shall be

L_{326} = 2,0 mm ± 0,1 mm.

The inside edge corner of the slots shall be rounded off with a radius

R_{305} = 0,5 mm max.

The outside edge corner of the slots shall be rounded off with a radius

R_{306} = 0,3 mm ± 0,1 mm.

The edge of the slot at the top right side shall be at a distance

L_{327} = 56,0 mm ± 0,3 mm

from Reference Plane X.

It shall be defined by dimensions of L_{324}, L_{325}, L_{326}, R_{305}, R_{306} and a width

L_{328} = 4,5 mm ± 0,2 mm

from Reference Plane Z.

12.2.6 Detents (Figure 41)

The case shall have two semi-circular, symmetrical detents intended for autoloading.

The positions and dimensions of these detents shall be

L_{427} = 3,0 mm ± 0,2 mm

L_{428} = 0,5 mm ± 0,1 mm

R_{307} = 1,5 mm ± 0,1 mm

originating at

L_{329} = 63,5 mm ± 0,3 mm

from Reference Plane X.

The width of the detents shall be

L_{330} = 3,7 mm ± 0,1 mm

the centre of which shall be located at

L_{331} = 2,7 mm ± 0,1 mm

© ISO/IEC 2004 – All rights reserved
Copyright International Organization for Standardization
Reproduced by IHS under license with ISO
No reproduction or networking permitted without license from IHS
Not for Resale

from Reference Plane Z.

The outside edges of the detents shall be rounded off with a radius

R_{308} = 0,4 mm ± 0,1 mm.

The bottom of the case shall have two symmetrical detents intended for clamping a cartridge in case of vertical use. Their dimensions shall be

L_{332} = 2,0 mm ± 0,1 mm

L_{333} = 3,7 mm ± 0,2 mm

L_{334} = 0,7 mm ± 0,1 mm

The centre of one of these detents shall be at a distance

L_{335} = 5,5 mm ± 0,2 mm

from Reference Plane Y.

The centre of the other shall be at a distance

L_{336} = 68,5 mm ± 0,2 mm

from Reference Plane Y.

Both centres shall be at a distance

L_{337} = 2,7 mm ± 0,1 mm

from Reference Plane Z.

12.2.7 Write-inhibit hole (Figure 42)

The case shall have a write-inhibit hole on Side B. The write-inhibit hole shall have a device for opening and closing the hole.

When writing and erasing on Side A of the disk are not allowed, the write-inhibit hole shall be open. It shall have a diameter

D_{302} = 2,5 mm min.

The position of its centre on Side B shall be specified by

L_{338} = 11,5mm ± 0,2 mm

L_{339} = 13,0 mm ± 0,2 mm

The hole shall extend below Reference Plane Z by

L_{340} = 4,0 mm min.

with a diameter equal at least to D_{302}.

When writing and erasing of the disk are allowed, the write-inhibit hole shall be closed by the write protect device.

The write protect device shall not be recessed from Reference Plane Z by

$L_{341} = 0{,}8\ \text{mm} \begin{matrix} +\ 0{,}2\ \text{mm} \\ -\ 0{,}1\ \text{mm} \end{matrix}$

12.2.8 Sensor holes (Figure 42)

The case shall have three sensor holes on Side B. The set of holes on Side B of the case, A1, A2 and A3 pertains to Side A of the disk. The holes shall have a diameter of

D_{303} = 2,5 mm min.

© ISO/IEC 2004 All rights reserved

Copyright International Organization for Standardization
Reproduced by IHS under license with ISO
No reproduction or networking permitted without license from IHS
Not for Resale

and the positions of their centres shall be specified by L_{338} and

L_{342} = 2,0 mm ± 0,2 mm

L_{343} = 3,0 mm ± 0,2 mm

L_{344} = 8,0 mm ± 0,2 mm.

The room below the holes shall be free by

L_{345} = 4,0 mm min.

above Reference Plane Z.

The diameter of the free room shall be at least equal to D_{303}. The holes shall be permitted to extend through Side A.

When a hole for Side A of the disk is closed, the closure shall not be recessed from Reference Plane Z by

$$L_{346} = 0{,}8\ \text{mm}\ {}^{+\,0{,}2\ \text{mm}}_{-\,0{,}1\ \text{mm}}$$

The sensor hole A1 shall indicate whether a disk has been taken out once or not. Originally, the sensor hole A1 shall be closed and once a disk has been taken out of the case, this hole shall be opened and never closed again.

The functions identified by the states of the sensor holes are specified in table 7.

Table 7 - Use of the sensor holes

Sensor hole	Function		State
	Closed	Open	
A1	The original disk has not been taken out	The original disk has been taken out, or a disk has been put in	Closed / Open
A2	Cartridge detection	Not permitted	Closed
A3	Reserved for future standardization		Closed

12.2.9 Spindle and head window (Figure 43)

The dimensions of the window shall be referenced to a centreline, located at a distance

L_{347} = 37,0 mm ± 0,1 mm

from Reference Plane Y. The width of the window from the top of the case to

L_{348} = 40,0 mm max.

shall be

L_{349} = 13,0 mm ± 0,1 mm

and

L_{350} = 13,0 mm ± 0,1 mm.

The top of the window shall be specified by

R_{309} = 40,7 mm min.

originating from L_{347} and

L_{351} = 29,0 mm ± 0,1 mm.

The width of the window with the projection portion shall be given by

© ISO/IEC 2004 – All rights reserved
Copyright International Organization for Standardization
Reproduced by IHS under license with ISO
No reproduction or networking permitted without license from IHS
Not for Resale

L_{352} = 10,0 mm min.

and

L_{353} = 10,0 mm min.

The width of the window at L_{351} shall be given by

$$L_{354} = 13{,}7\ \text{mm}\ {}^{+\,0{,}2\ \text{mm}}_{-\,0{,}0\ \text{mm}}$$

and

$$L_{355} = 13{,}7\ \text{mm}\ {}^{+\,0{,}2\ \text{mm}}_{-\,0{,}0\ \text{mm.}}$$

The bottom and the projection portion of the window shall be the arc specified by a radius

R_{310} = 14,0 mm min.

and its centre shall be defined by the intersection of L_{347} and L_{351}.

The area bounded by R_{309} and top of the case shall be recessed from Reference Plane Z by

L_{356} = 1,3 mm min.

L_{357} = 4,1 mm max.

over the width of the window.

12.2.10 Shutter shape (Figure 44)

The case shall have a spring-loaded shutter completely covering the spindle and head windows when the case is not inside a drive. The shutter shall be free to slide in a recessed area of the case. The shutter shall not protrude beyond Reference Planes Z or the surface of Side A by more than 0,15 mm.

The shutter shall have an opener slot and an opener edge against which the shutter opener of the drive can push to open the shutter. The shutter can be moved toward the left corresponding to the shutter opener mechanism.

The top of the shutter shall be located at

$$L_{358} = 77{,}0\ \text{mm}\ {}^{+\,0{,}3\ \text{mm}}_{-\,0{,}2\ \text{mm}}$$

from Reference Plane X.

The opener slot shall be defined by the dimensions

L_{359} = 5,0 mm ± 0,1 mm

$$L_{360} = 2{,}2\ \text{mm}\ {}^{+\,0{,}3\ \text{mm}}_{-\,0{,}0\ \text{mm.}}$$

L_{361} = 2,0 mm ± 0,1 mm

and its centre shall be defined by the intersection of

L_{362} = 37,0 mm ± 0,2 mm

from Reference Plane Y and

L_{363} = 2,7 mm ± 0,1 mm

from Reference Plane Z when the shutter is closed.

The outside edge corners shall be rounded off with a radius

© ISO/IEC 2004 All rights reserved

Copyright International Organization for Standardization
Reproduced by IHS under license with ISO
No reproduction or networking permitted without license from IHS
Not for Resale

R_{311} = 0,4 mm max.

The inside edge corners shall be rounded off with a radius

R_{312} = 0,4 mm max.

The opener edge shall be defined by the dimensions

L_{429} = 2,2 mm min.

L_{367} = 2,2 mm ± 0,2 mm

and its centre shall be located at L_{363}.

When the shutter is closed, the opener edge shall be at

L_{364} = 50,7 mm ± 0,3 mm

from Reference Plane Y.

The case shall have an opener guide through which the opener edge can be pushed by the shutter opener of a drive.

In projective figure viewed from the case side shall be defined by L_{367} and a width of

L_{365} = 2,4 mm ± 0,2 mm

with the centre located at

L_{366} = 2,7 mm ± 0,1 mm

from Reference Plane Z.

The corner of the opener guide shall be rounded off with a radius

R_{313} = 0,4 mm ± 0,1 mm.

12.2.11 Path for shutter opener (Figure 45)

When the left-hand edge position of the opener slot is

L_{368} = 6,3 mm,

the shutter shall be open at

L_{369} = 12,9 mm min.

and

L_{370} = 13,7 mm min.

from L_{347}.

When the position of the opener edge is

L_{371} = 22,5 mm,

the shutter shall be open at L_{369} and L_{370}.

The left-hand edge position of the opener slot shall be

L_{372} = 5,9 mm max.

and the position of the opener edge shall be

L_{373} = 22,1 mm max.

when the shutter completely moves up.

© ISO/IEC 2004 – All rights reserved
Copyright International Organization for Standardization
Reproduced by IHS under license with ISO
No reproduction or networking permitted without license from IHS
Not for Resale

12.2.12 Label areas (Figure 46)

The case shall have two label areas on Side A. Their dimensions shall be

L_{374} = 7,1 mm ± 0,2 mm

L_{375} = 5,0 mm ± 0,2 mm

L_{376} = 8,0 mm ± 0,2 mm

L_{377} = 66,0 mm ± 0,3 mm

L_{378} = 14,0 mm ± 0,2 mm

L_{379} = 72,0 mm ± 0,3 mm

L_{380} = 77,0 mm ± 0,3 mm

L_{381} = 55,0 mm ± 0,3 mm

R_{314} = 1,0 mm ± 0,2 mm

The label areas shall be recessed by 0,2 mm min.

12.2.13 Identification marks for Sides A and B (Figure 47)

Side A and Side B shall be identified by an identification mark provided on a concave part on Side A and Side B, respectively. On Side A, this concave part presents a small round projection, on Side B two such projections are provided. The position and dimensions of these identification marks shall be as follows.

Side A

$R_{315} = 0{,}4\ ^{+0{,}1\ \text{mm}}_{-0{,}0\ \text{mm}}$

$L_{383} = 0{,}4\ ^{+0{,}1\ \text{mm}}_{-0{,}0\ \text{mm}}$

L_{384} = 10,2 mm ± 0,3 mm

L_{385} = 37,0 mm ± 0,4 mm

$L_{386} = 0{,}5\ ^{+0{,}1\ \text{mm}}_{-0{,}0\ \text{mm}}$

L_{387} = 9,0 mm ± 1,0 mm

L_{388} = 5,0 mm ± 0,5 mm

Side B

$R_{315} = 0{,}4\ ^{+0{,}1\ \text{mm}}_{-0{,}0\ \text{mm}}$

$L_{383} = 0{,}4\ ^{+0{,}1\ \text{mm}}_{-0{,}0\ \text{mm}}$

L_{384} = 10,2 mm ± 0,3 mm

L_{385} = 37,0 mm ± 0,4 mm

$L_{386} = 0{,}5\ ^{+0{,}1\ \text{mm}}_{-0{,}0\ \text{mm}}$

© ISO/IEC 2004 – All rights reserved

Copyright International Organization for Standardization
Reproduced by IHS under license with ISO
No reproduction or networking permitted without license from IHS
Not for Resale

L_{387} = 9,0 mm ± 1,0 mm

L_{388} = 5,0 mm ± 0,5 mm

L_{389} = 3,0 mm ± 0,3 mm

12.2.14 Disk holder and body (Figure 48)

The case shall consist of a body and a disk holder to allow the removal or replacement of the disk. In the original condition, the disk holder shall be locked in the body and the sensor holes A1 closed.

When the status of the sensor holes A1 changes from closed to open, the disk holder holding a disk can be removed from the case. Once the status of the sensor holes A1 changes from closed to open, the open status is kept and cannot be changed back to the closed status. The body and the disk holder shall be formed so as not damaging the read-out side of the disk.

The disk holder shall have a pair of holding arms with upper and lower flanges, a grip, a pair of lock levers with a lock portion and a pair of detents. A disk shall be supported among the holding arms and the grip. The disk shall not be removed from the disk holder by a releasing force of 0,35 N or less.

The dimensions of the disk holder shall be as follows, using the three orthogonal reference plane A, B and C.

Arm

L_{390} = 22,0 mm ± 0,2 mm

L_{391} = 79,0 mm ± 0,2 mm

L_{392} = 84,8 mm ± 0,1 mm

L_{393} = 74,0 mm ± 0,2 mm

L_{394} = 19,5 mm ± 0,2 mm

L_{395} = 70,0 mm ± 0,2 mm

L_{396} = 70,0 mm min. (The upper and lower flanges shall not lie inside L_{396})

$R_{316} = 38{,}5\ ^{+0{,}1\ \text{mm}}_{-0{,}0\ \text{mm}}$

$R_{317} = 40{,}7\ ^{+0{,}1\ \text{mm}}_{-0{,}0\ \text{mm}}$

R_{318} = 42,4 mm ± 0,1 mm

L_{397} = 3,7 mm ± 0,05 mm

L_{398} = 2,9 mm ± 0,1 mm

L_{399} = 3,1 mm ± 0,05 mm

Grip

L_{400} = 43,0 mm ± 0,1 mm

L_{401} = 35,5 mm ± 0,1 mm

$L_{402} = 32{,}0\ ^{+0{,}0\ \text{mm}}_{-0{,}2\ \text{mm}}$

$L_{403} = 29{,}0\ ^{+0{,}0\ \text{mm}}_{-0{,}2\ \text{mm}}$

© ISO/IEC 2004 – All rights reserved
Copyright International Organization for Standardization
Reproduced by IHS under license with ISO
No reproduction or networking permitted without license from IHS
Not for Resale

$L_{404} = 0{,}7\ ^{+0{,}0\ mm}_{-0{,}2\ mm}$

$L_{405} = 22{,}0\ ^{+0{,}0\ mm}_{-0{,}2\ mm}$

$L_{406} = 19{,}0\ ^{+0{,}0\ mm}_{-0{,}2\ mm}$

$R_{319} = 0{,}5\ mm \pm 0{,}1\ mm$

$R_{320} = 1{,}2\ mm \pm 0{,}1\ mm$

$L_{407} = 4{,}5\ mm \pm 0{,}1\ mm$

$L_{408} = 3{,}1\ mm \pm 0{,}05\ mm$

$L_{409} = 5{,}4\ mm \pm 0{,}05\ mm$

$L_{410} = 3{,}0\ ^{+0{,}2\ mm}_{-0{,}0\ mm}$

$L_{411} = 20{,}0\ mm \pm 0{,}1\ mm$

$L_{412} = 12{,}0\ mm \pm 0{,}1\ mm$

$L_{413} = 0{,}1\ ^{+0{,}1\ mm}_{-0{,}0\ mm}$

$L_{414} = 0{,}5\ ^{+0{,}1\ mm}_{-0{,}0\ mm}$

$L_{415} = 1{,}9\ mm \pm 0{,}1\ mm$

Lock lever

$L_{416} = 85{,}0\ mm \pm 0{,}1\ mm$

$L_{417} = 34{,}5\ mm \pm 0{,}1\ mm$

$L_{418} = 1{,}0\ mm \pm 0{,}1\ mm$

$L_{419} = 1{,}0\ ^{+0{,}0\ mm}_{-0{,}3\ mm}$

$L_{420} = 1{,}85\ ^{+0{,}1\ mm}_{-0{,}3\ mm}$

$L_{421} = 4{,}0\ mm \pm 0{,}2\ mm$

$L_{422} = 27{,}8\ mm \pm 0{,}2\ mm$

$L_{423} = 36{,}0\ mm \pm 0{,}1\ mm$

$L_{424} = 1{,}0\ mm \pm 0{,}1\ mm$

Detent

$L_{425} = 20{,}0\ mm \pm 0{,}1\ mm$

$R_{321} = 1{,}5\ mm \pm 0{,}1\ mm$

The body shall be formed to engage the lock portions and the grip of the disk holder, as an example shown in annex J.

© ISO/IEC 2004 All rights reserved

Copyright International Organization for Standardization
Reproduced by IHS under license with ISO
No reproduction or networking permitted without license from IHS
Not for Resale

The body shall have the mis-release protection function for the disk holder with dimensions of L_{323}, L_{324}, L_{325}, L_{326}, R_{305}, R_{306} and

L_{426} = 2,7 mm min.

as shown in figure 49.

The body shall be formed so as to enable to set the disk holder with its elastic deformation in the condition of entering the disk in the body.

© ISO/IEC 2004 – All rights reserved
Copyright International Organization for Standardization
Reproduced by IHS under license with ISO
No reproduction or networking permitted without license from IHS
Not for Resale

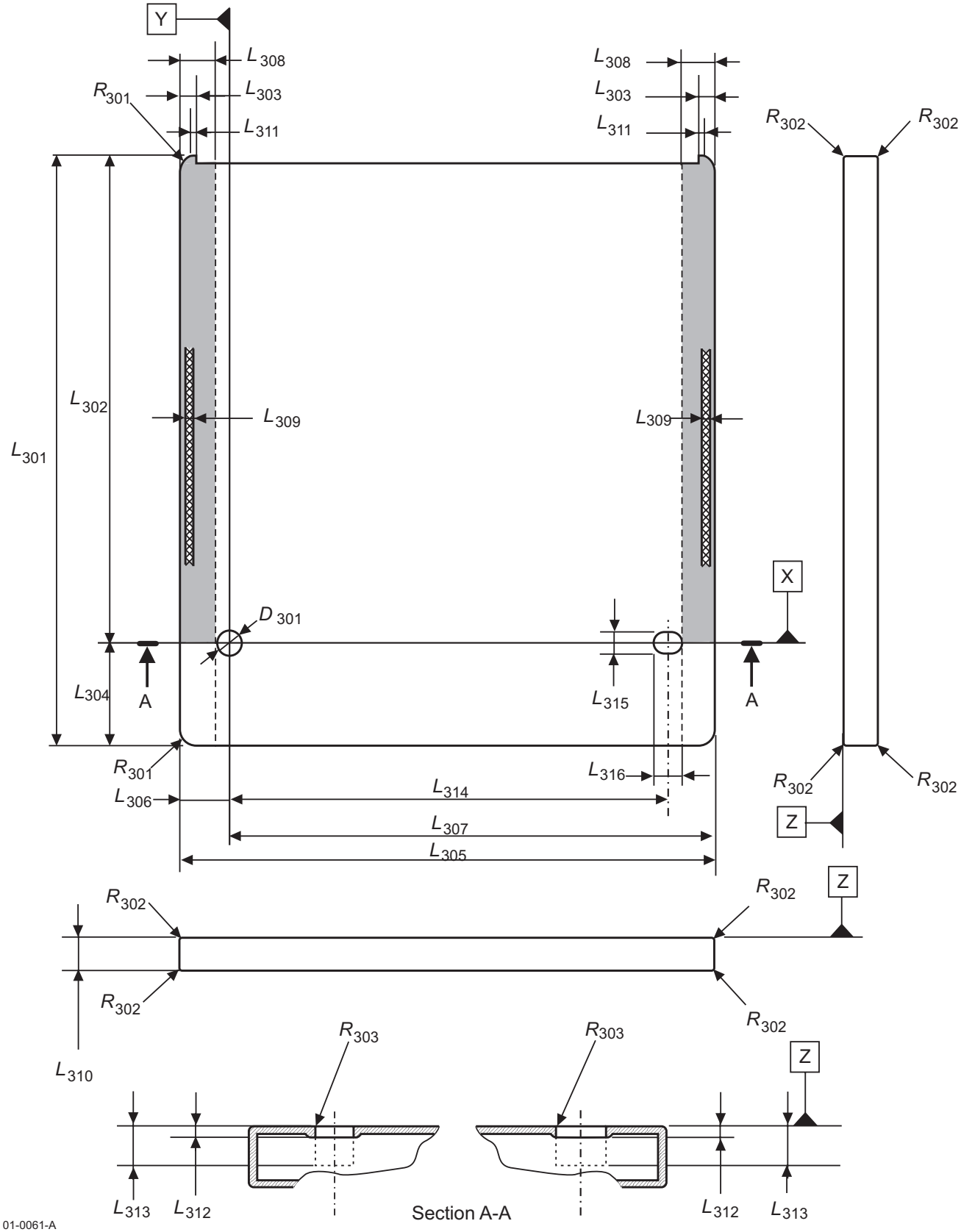

Figure 39 - Overall dimensions

© ISO/IEC 2004 All rights reserved
Copyright International Organization for Standardization
Reproduced by IHS under license with ISO
No reproduction or networking permitted without license from IHS
Not for Resale

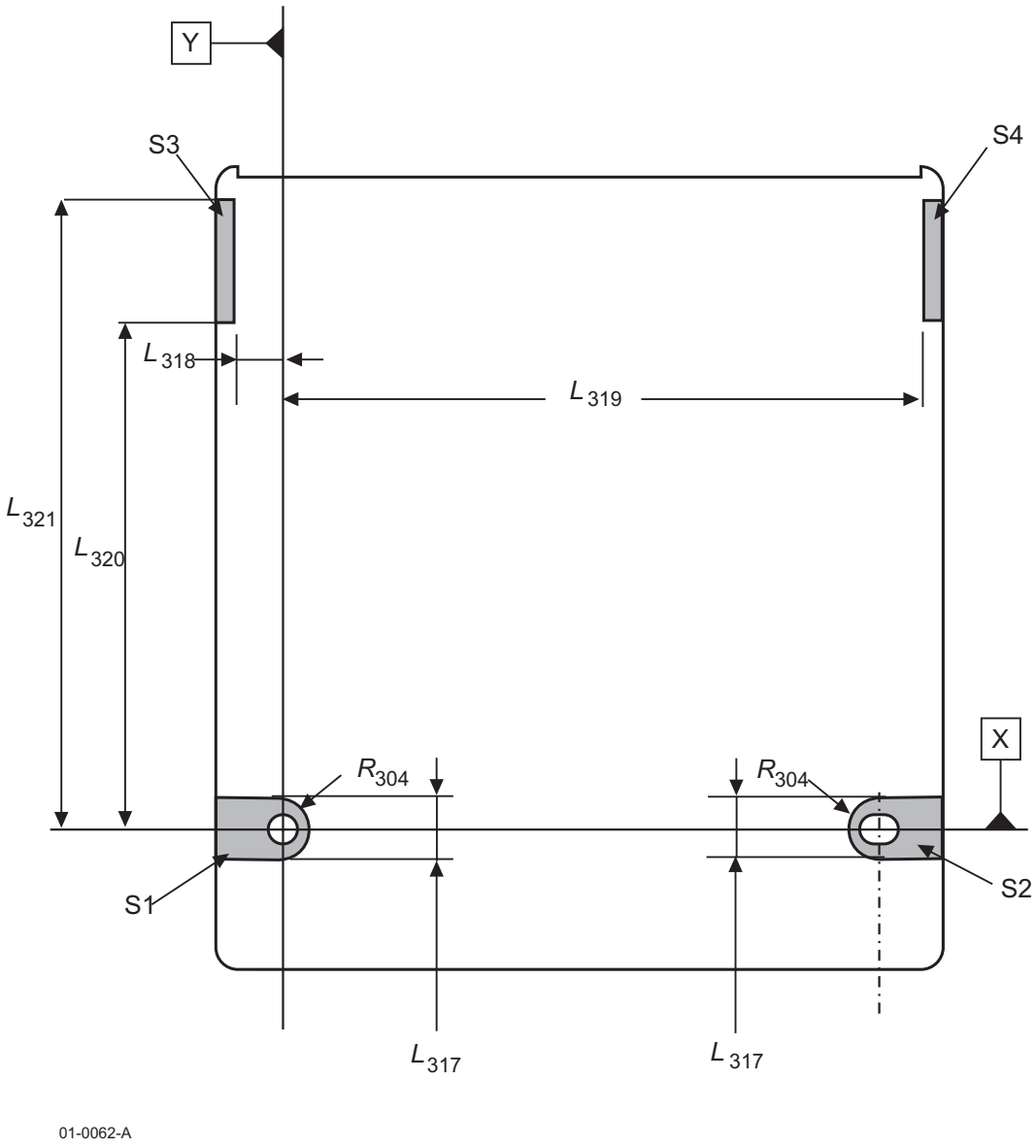

Figure 40 - Reference surfaces

© ISO/IEC 2004 – All rights reserved
Copyright International Organization for Standardization
Reproduced by IHS under license with ISO
No reproduction or networking permitted without license from IHS
Not for Resale

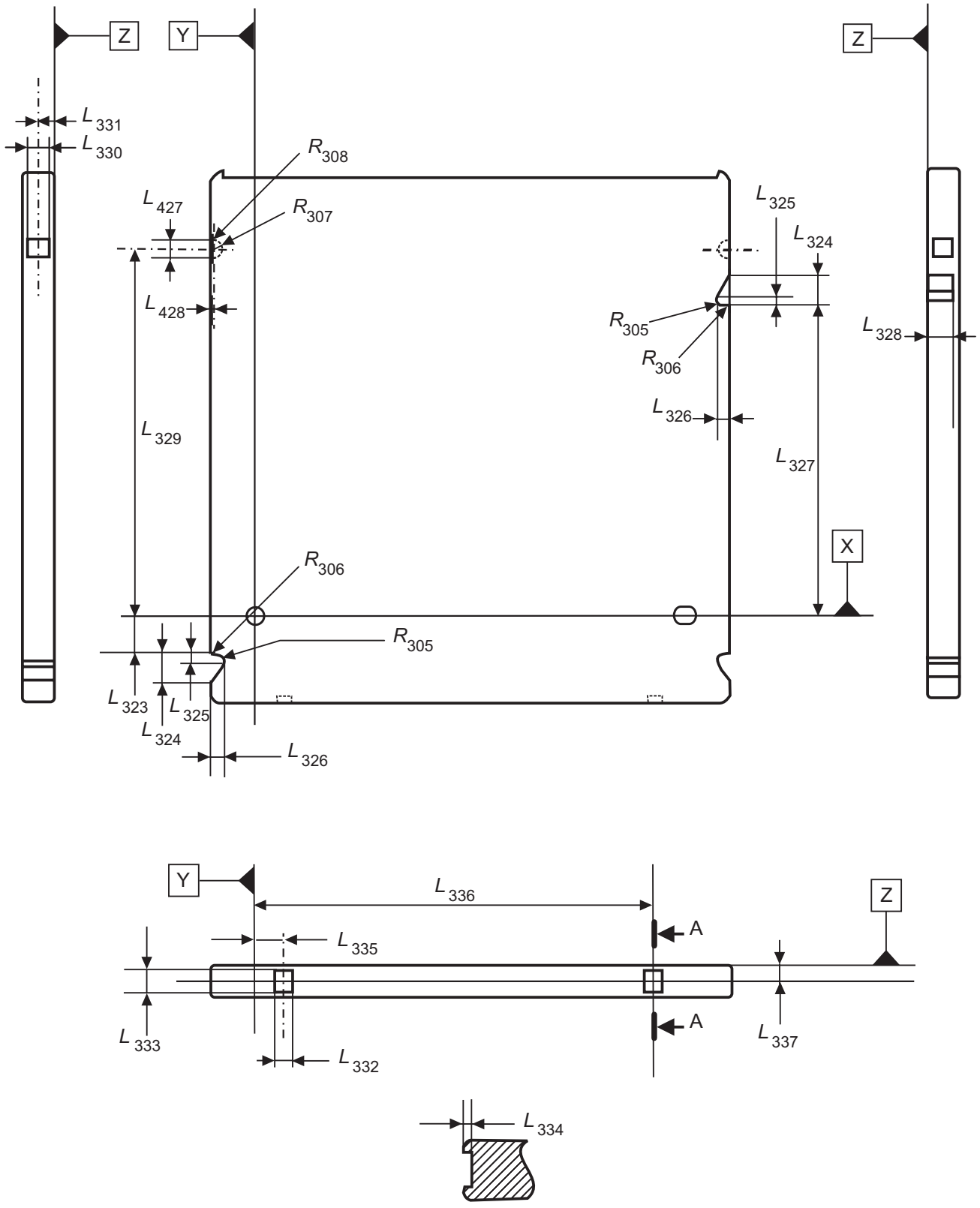

Figure 41 - Mis-insertion protection slot and detents

© ISO/IEC 2004 All rights reserved

Copyright International Organization for Standardization
Reproduced by IHS under license with ISO
No reproduction or networking permitted without license from IHS
Not for Resale

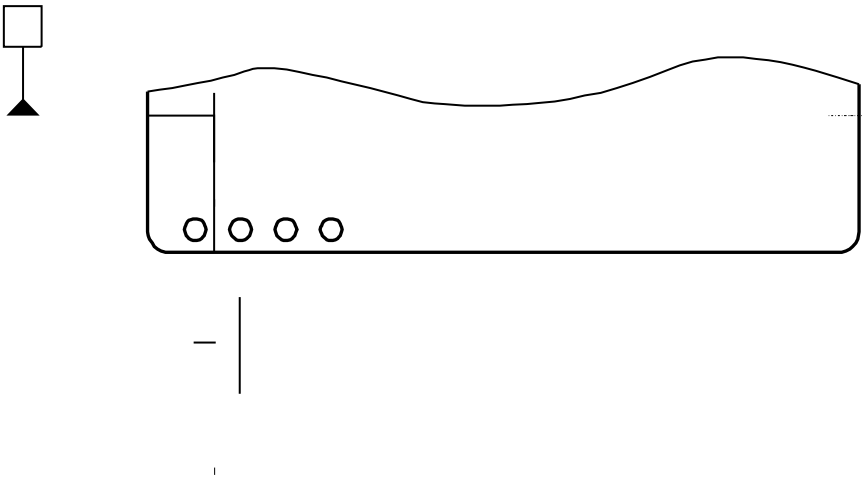

Figure 42 - Write-inhibit hole and sensor holes

Copyright International Organization for Standardization
Reproduced by IHS under license with ISO
No reproduction or networking permitted without license from IHS
Not for Resale
© ISO/IEC 2004 – All rights reserved

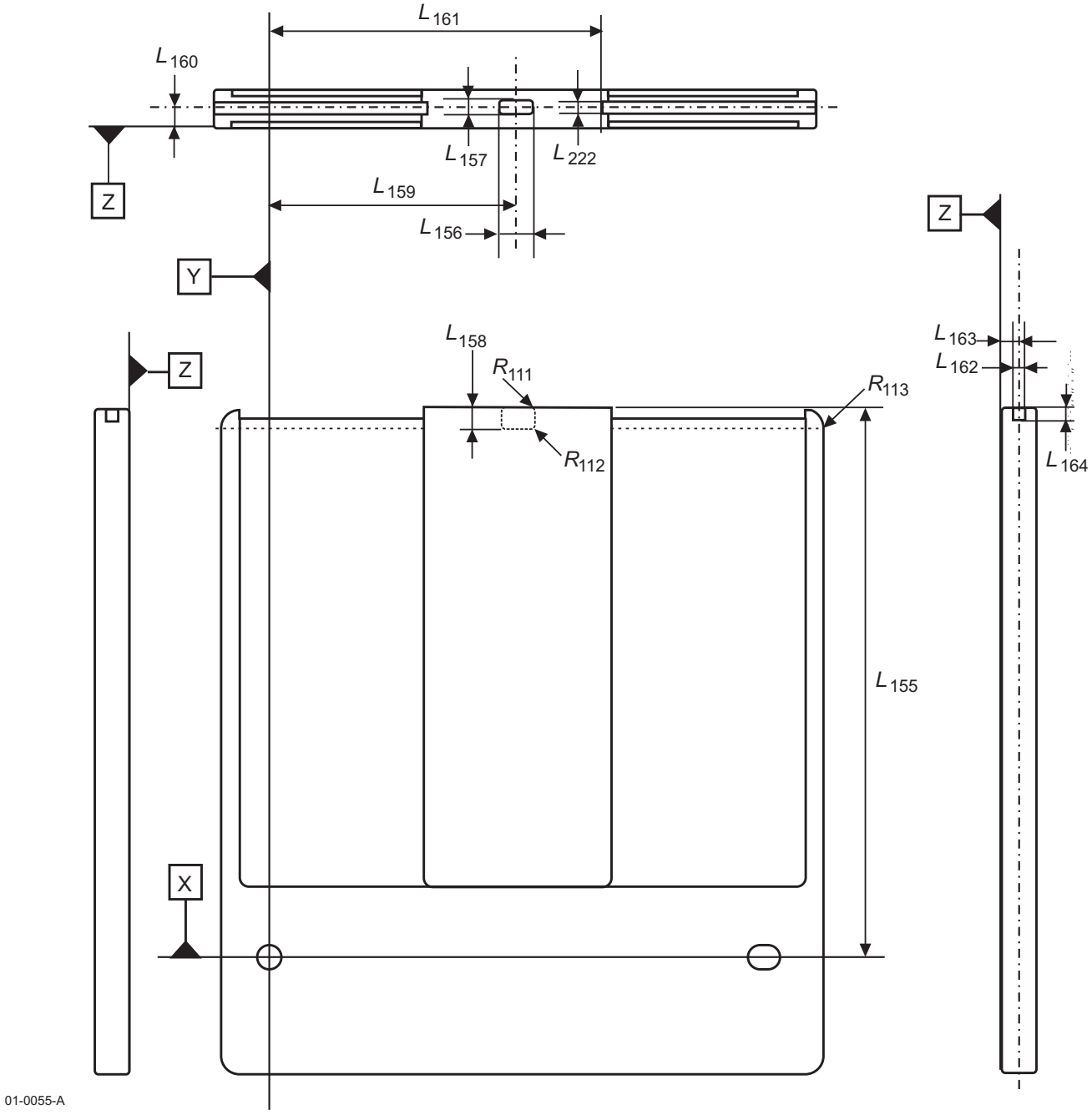

Figure 43 - Spindle and head window

© ISO/IEC 2004 All rights reserved
Copyright International Organization for Standardization
Reproduced by IHS under license with ISO
No reproduction or networking permitted without license from IHS
Not for Resale

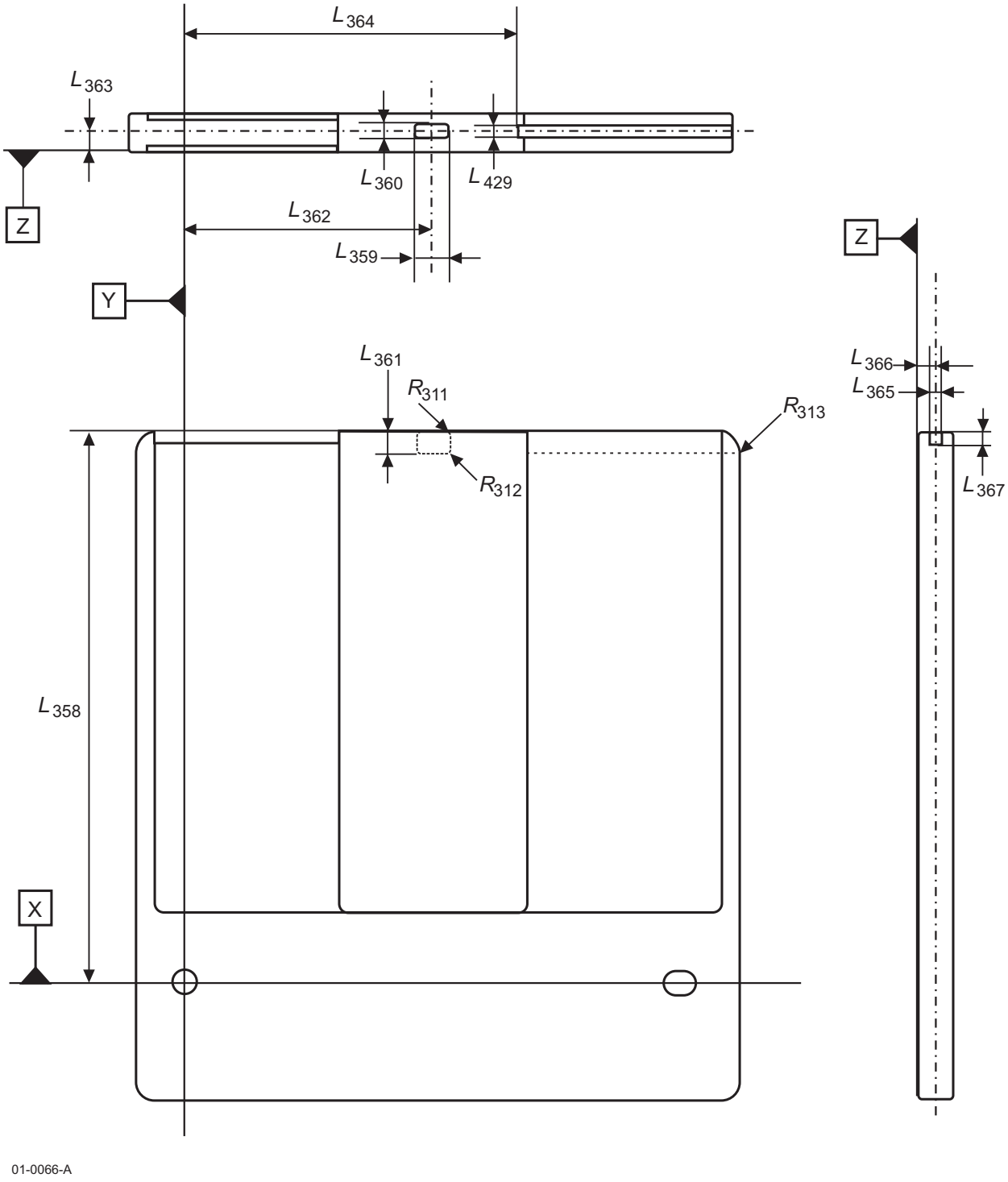

Figure 44 - Shape of the shutter

© ISO/IEC 2004 – All rights reserved
Copyright International Organization for Standardization
Reproduced by IHS under license with ISO
No reproduction or networking permitted without license from IHS
Not for Resale

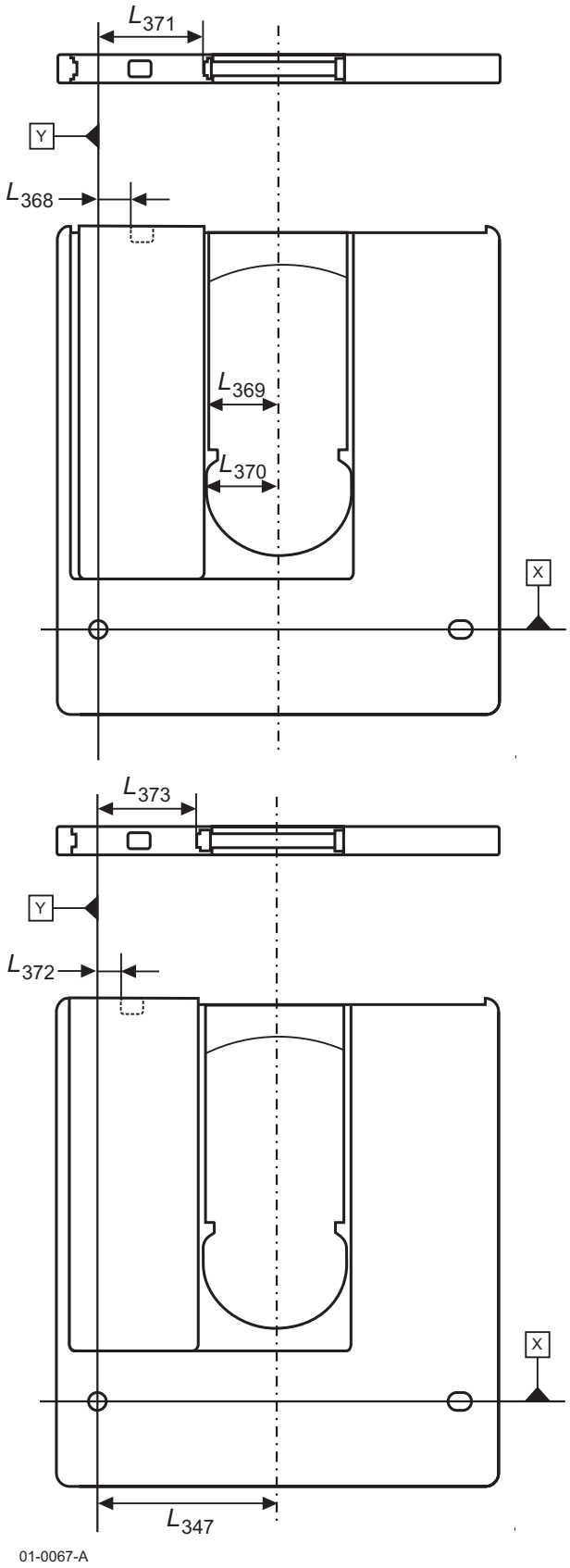

Figure 45 - Shutter in just open position (top view) and maximum open position (bottom view)

© ISO/IEC 2004 All rights reserved

Copyright International Organization for Standardization
Reproduced by IHS under license with ISO
No reproduction or networking permitted without license from IHS
Not for Resale

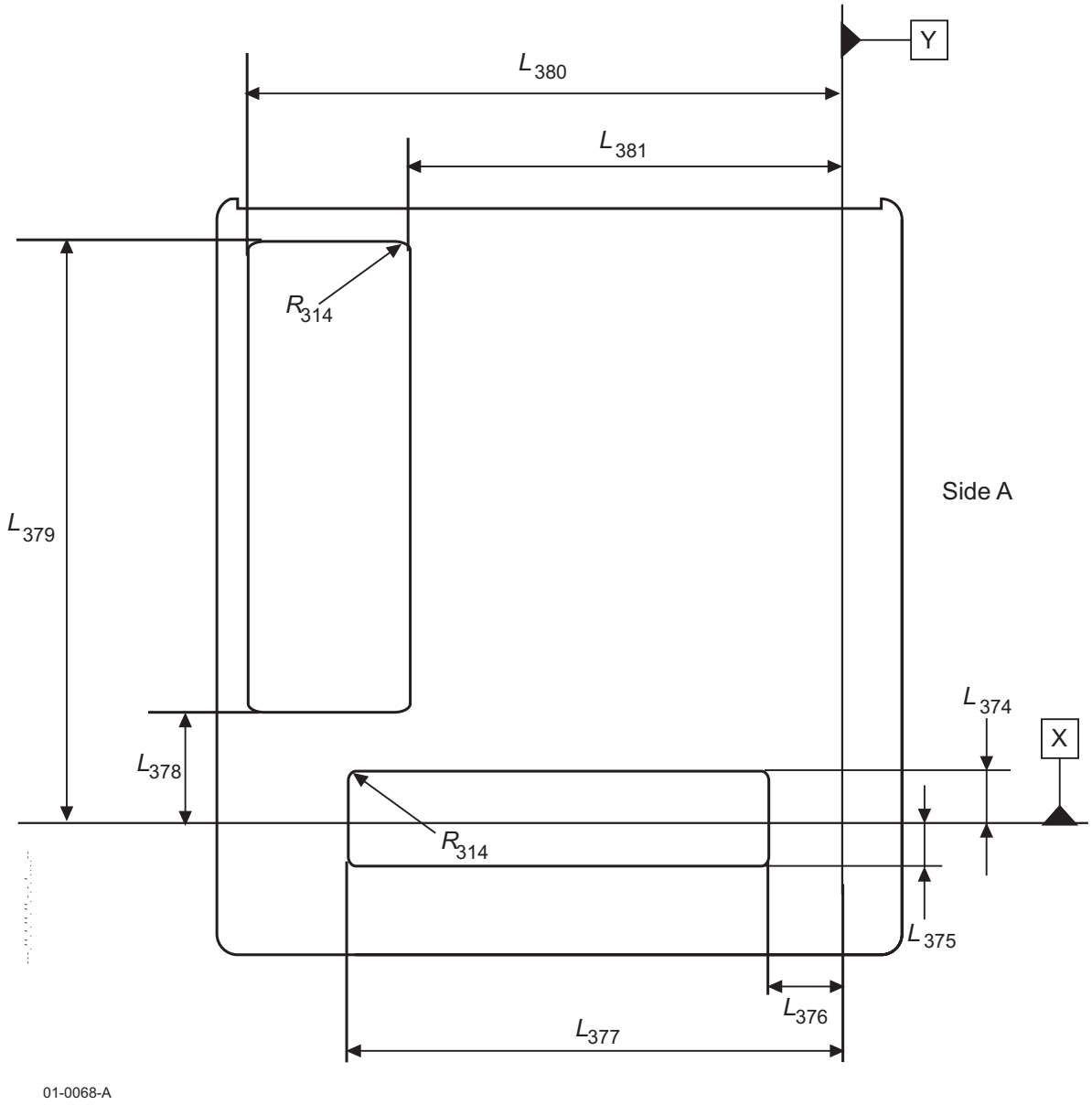

Figure 46 - Label areas

© ISO/IEC 2004 – All rights reserved
Copyright International Organization for Standardization
Reproduced by IHS under license with ISO
No reproduction or networking permitted without license from IHS
Not for Resale

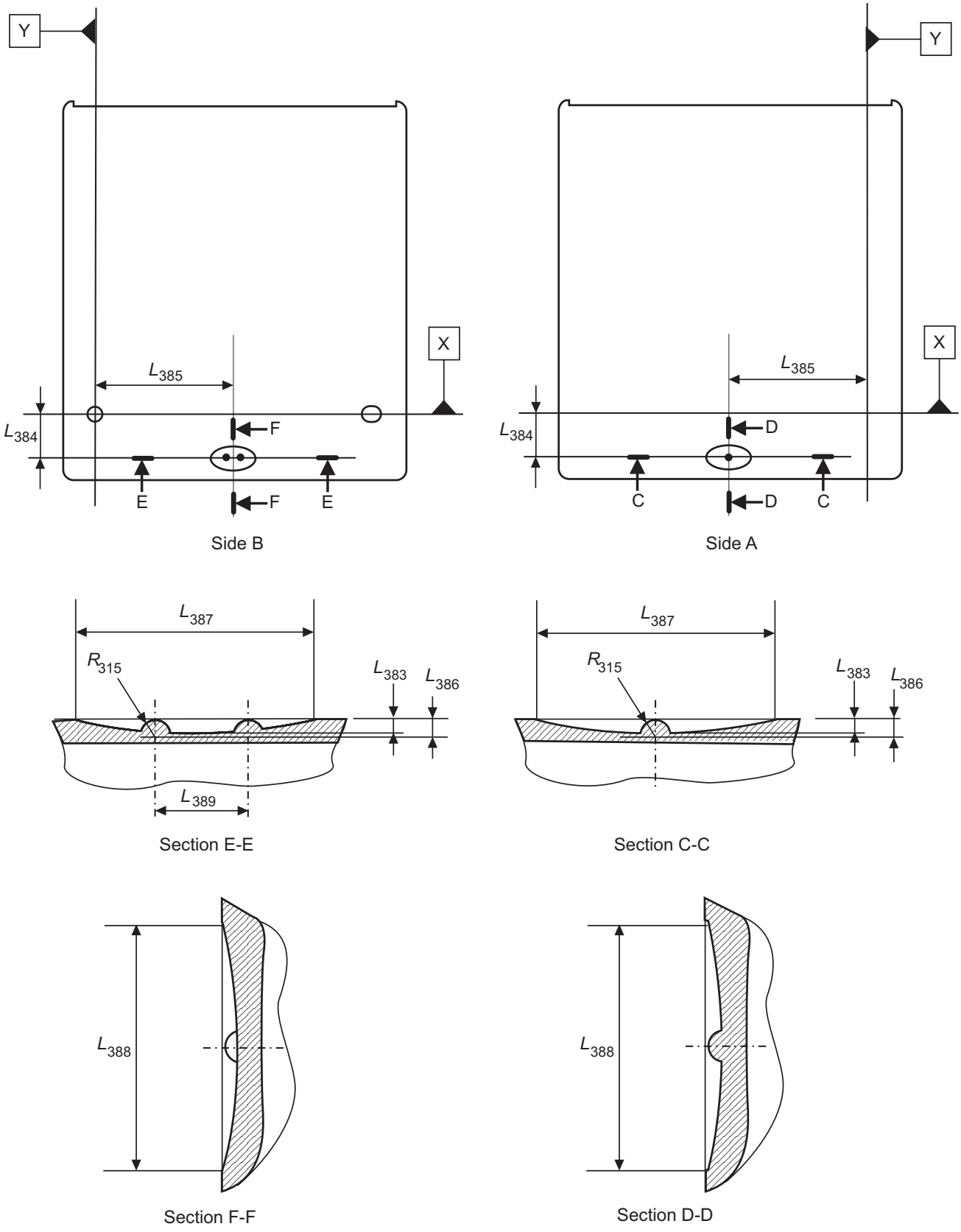

Figure 47 - Identification mark of Side A and B

© ISO/IEC 2004 All rights reserved
Copyright International Organization for Standardization
Reproduced by IHS under license with ISO
No reproduction or networking permitted without license from IHS
Not for Resale

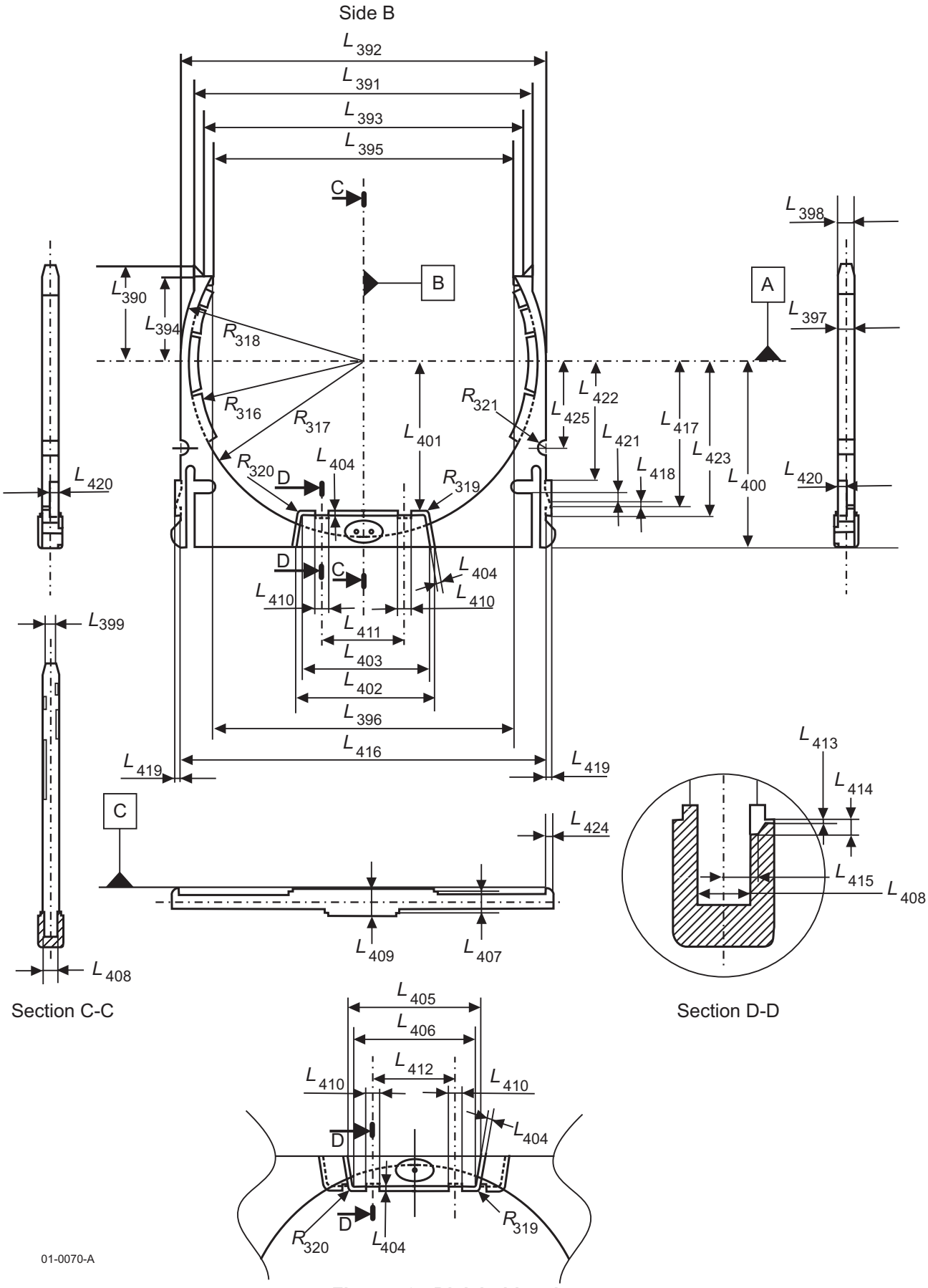

Figure 48 - Disk holder shape

© ISO/IEC 2004 – All rights reserved
Copyright International Organization for Standardization
Reproduced by IHS under license with ISO
No reproduction or networking permitted without license from IHS
Not for Resale

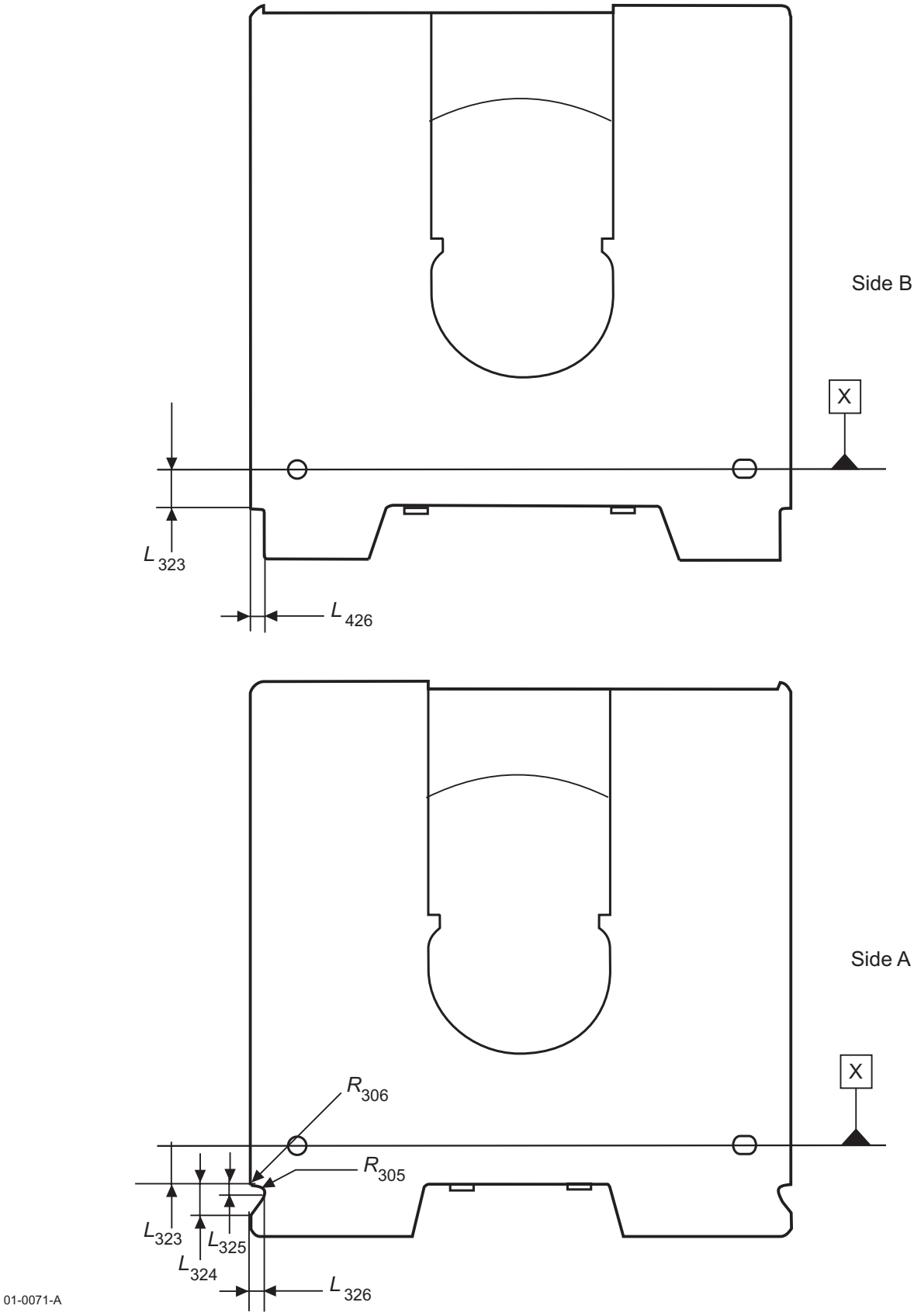

Figure 49 - Mis-release protection function of body of the case

© ISO/IEC 2004 All rights reserved
Copyright International Organization for Standardization
Reproduced by IHS under license with ISO
No reproduction or networking permitted without license from IHS
Not for Resale

12.3 Dimensions of the Type 8 case

The dimensions of the Type 8 case shall be measured in the test environment (see 7.1.1). The dimensions of the case in an operating environment (see 7.1.2) can be estimated from the dimensions specified in this clause.

The dimensions of the case are identical with those of the Type 6 case. See 12.1.

The following clauses specify different features from the Type 6 case.

12.3.1 Sensor holes

The functions identified by the states of the sensor holes are specified in table 8.

Table 8 - Use of the sensor holes

Sensor hole	Function		State
	Closed	Open	
A1	Not permitted	There may or may not be a disk within the case	Open
A2	Cartridge detection	Not permitted	Closed
A3	Reserved for future standardization		Closed
B1	Not permitted	There may or may not be a disk within the case	Open
B2	Cartridge detection	Not permitted	Closed
B3	Reserved for future standardization		Closed

12.3.2 Disk holder and body

The case shall have a body and a disk holder to allow the insertion or removal of a disk. The disk holder can be taken out of and set in the body freely.

12.4 Dimensions of the Type 9 case

The dimensions of the Type 9 case shall be measured in the test environment (see 7.1.1). The dimensions of the case in an operating environment (see 7.1.2) can be estimated from the dimensions specified in this clause.

The dimensions of the case are identical with those of the Type 7 case. See 12.2.

The following clauses specify different features from the Type 7 case.

12.4.1 Sensor holes

The functions identified by the states of the sensor holes are specified in table 9.

Table 9 - Use of the sensor holes

Sensor hole	Function		State
	Closed	Open	
A1	Not permitted	There may or may not be a disk within the case	Open
A2	Cartridge detection	Not permitted	Closed
A3	Reserved for future standardization		Closed

© ISO/IEC 2004 – All rights reserved
Copyright International Organization for Standardization
Reproduced by IHS under license with ISO
No reproduction or networking permitted without license from IHS
Not for Resale

12.4.2 Disk holder and body

The case shall have a body and a disk holder to allow the insertion or removal of a disk. The disk holder can be taken out of and set in the body freely.

13 Mechanical characteristics

13.1 Material

The case shall be constructed from any suitable materials such that it meets the requirements of this International Standard.

13.2 Mass

The mass of the case without the disk shall not exceed 40 g.

13.3 Edge distortion

The cartridge shall meet the requirement of the edge distortion test defined in annex E.

13.4 Compliance

The case shall meet the requirement of the compliance (flexibility) test defined in annex F.

13.5 Shutter opening force

The spring force on the shutter shall be such that the force required to open the shutter does not exceed 1,75 N while the vertical force of 2,5 N is applied to the shutter top surface. (See annex G) It shall be sufficiently strong to close a free-sliding shutter, irrespective of the orientation of the case.

14 Interface between the case used as cartridge and a drive

14.1 Capture cylinder (Figure 50)

The capture cylinder is defined as the volume within which the spindle can expect the centre of the disk hole to be, just prior to capture, and with the cartridge constrained as specified in 13.4. The size of the cylinder defines the permissible play of the disk inside its cavity in the case. The cylinder is referred to perfectly located and perfectly sized alignment and location pins in the drive; it includes the tolerances of those dimensions of the case and the disk which are between the two pins mentioned and the centre of the disk.

The bottom of the cylinder shall be parallel to Reference Plane Z, and shall be located at a distance

L_{501} = 1,1 mm min.

above Reference Plane Z. The top of the cylinder is located at a distance

L_{502} = 3,6 mm max.

from Reference Plane Z. The diameter of the cylinder shall be

D_{501} = 2,8 mm max.

and its centre shall be given by the nominal values of L_{145} and L_{149} of Type 6 case or Type 8 case, or L_{347} and L_{351} of Type 7 case or Type 9 cases, in the drive.

14.2 Inner dimensions of the case (Figure 51)

The inner space of the disk shall be such that the disk is not in contact with the case during operation. The inner shape of the case shall meet the following requirements.

© ISO/IEC 2004 All rights reserved

Copyright International Organization for Standardization
Reproduced by IHS under license with ISO
No reproduction or networking permitted without license from IHS
Not for Resale

L_{503} = 1,7 mm max.

L_{504} = 3,9 mm min.

measured from Reference Plane Z and

$L_{505} = 0{,}3\ ^{+0{,}1\ \text{mm}}_{-0{,}0\ \text{mm}}$

$L_{506} = 0{,}3\ ^{+0{,}1\ \text{mm}}_{-0{,}0\ \text{mm}}$

from the surfaces of L_{503} and L_{504} respectively and

R_{501} = 15,5 mm max.

R_{502} = 40,7 mm min.

from a centre given by the nominal values of L_{145} and L_{149} of Type 6 case or Type 8 case, or L_{347} and L_{351} of Type 7 or Type 9 cases.

15 Orientation of the disk in the case

15.1 Two-sided disk (Type 2S) in case Types 6 and 8

The disk surfaces are defined as Side A and Side B. Sides A and B of the case are identical as far as the features specified in this International Standard are concerned. The two-sided disk (Type 2S) has no specific orientation in the case. Therefore, references to Sides A and B of the case can be changed to B and A respectively.

15.2 One-sided disk (Type 1S) in case Types 7 and 9

A one-sided disk (Type 1S) has only one functional entrance surface defined as Side A. The disk shall be oriented in the case so that when Side A of the case faces upwards, Side A of the disk faces downwards.

Copyright International Organization for Standardization
Reproduced by IHS under license with ISO
No reproduction or networking permitted without license from IHS
© ISO/IEC 2004 – All rights reserved
Not for Resale

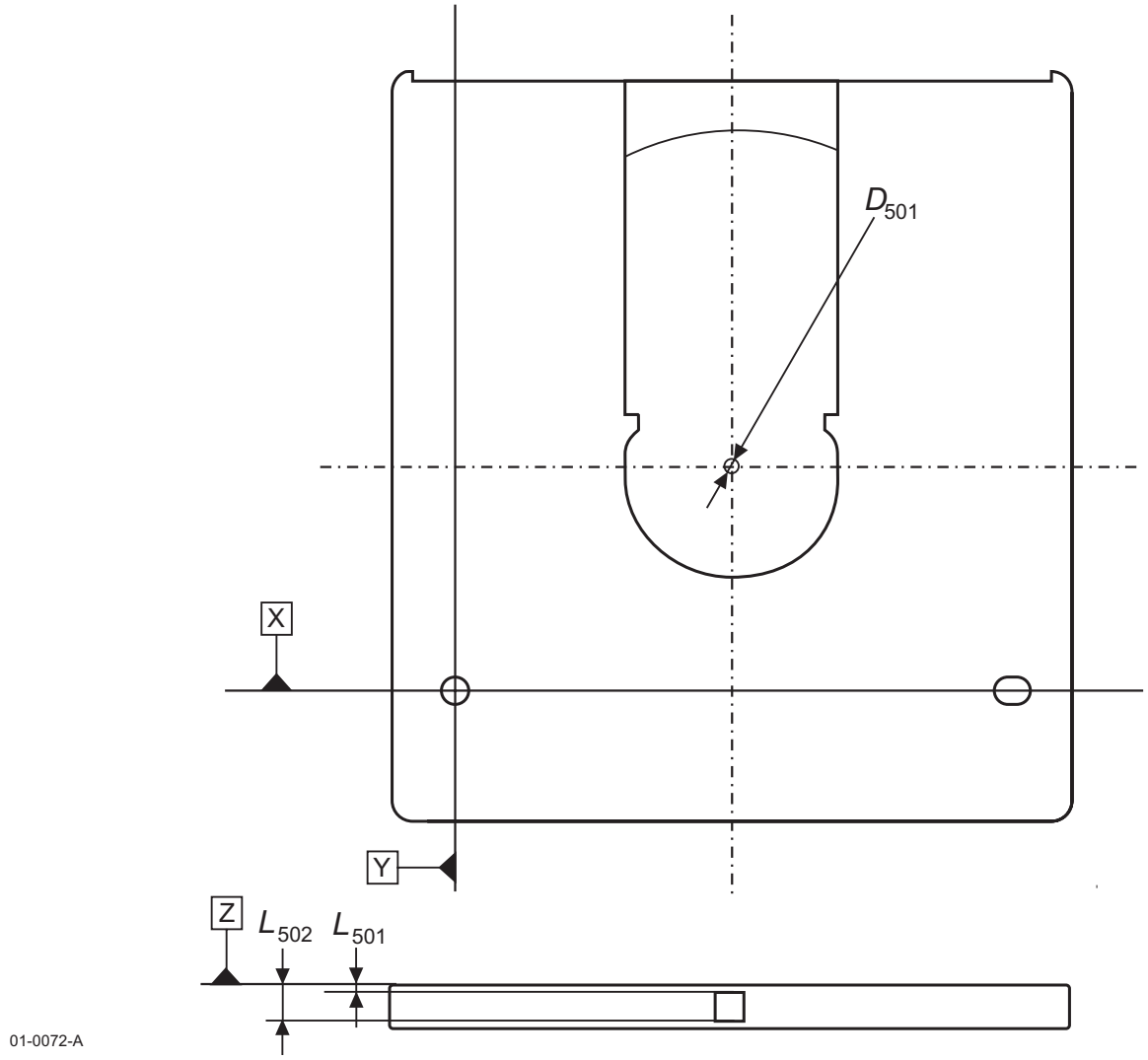

Figure 50 - Capture cylinder

© ISO/IEC 2004 All rights reserved
Copyright International Organization for Standardization
Reproduced by IHS under license with ISO
No reproduction or networking permitted without license from IHS
Not for Resale

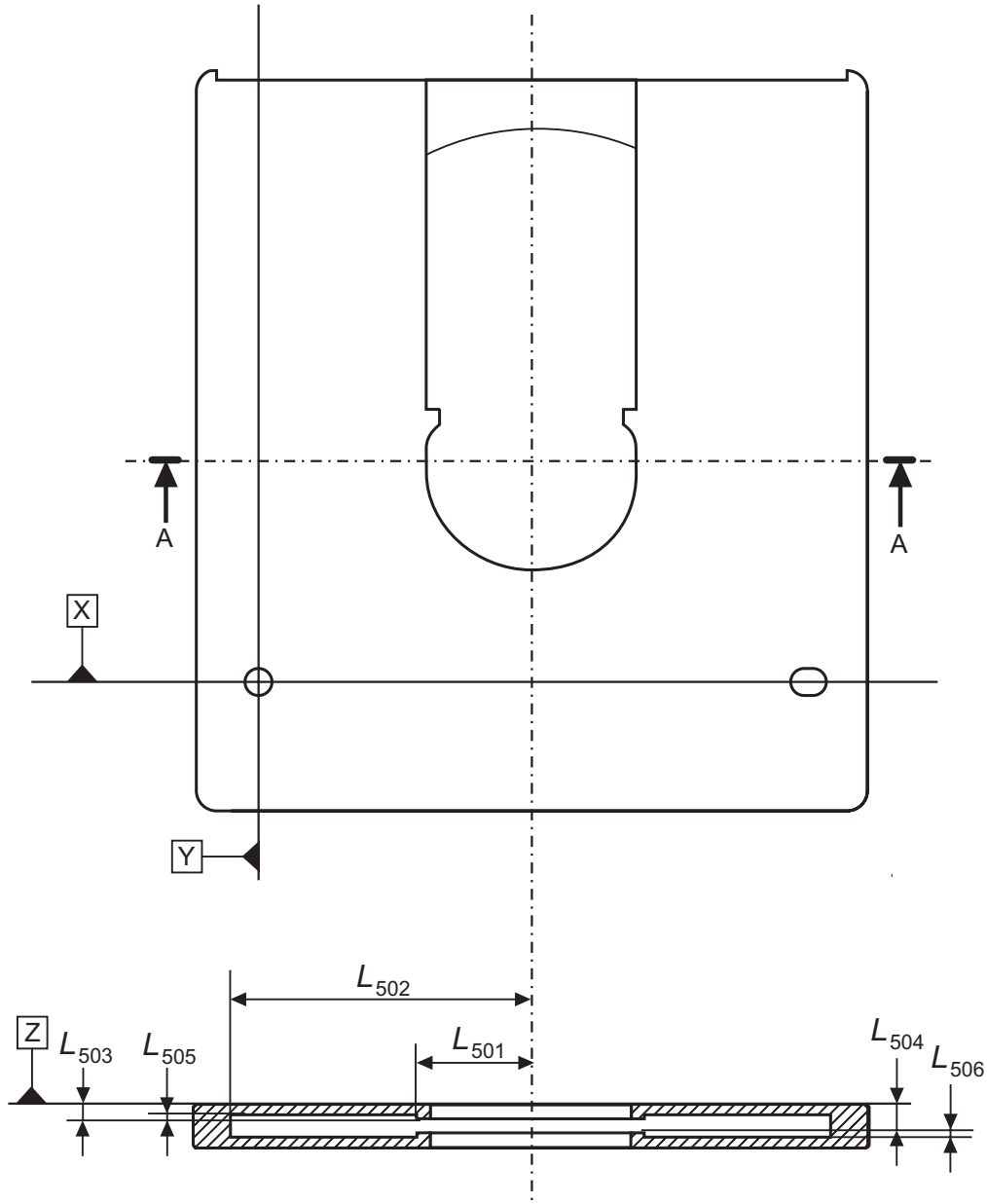

Section A-A

01-0073-A

Figure 51 - Inner dimensions of the case

Copyright International Organization for Standardization
Reproduced by IHS under license with ISO
No reproduction or networking permitted without license from IHS
Not for Resale
© ISO/IEC 2004 – All rights reserved

Annex A
(normative)

Position of the case for 120 mm disk relative to the Reference Planes

This annex shows the position of the case for 120 mm disk relative to the Reference Planes, as specified in 8.

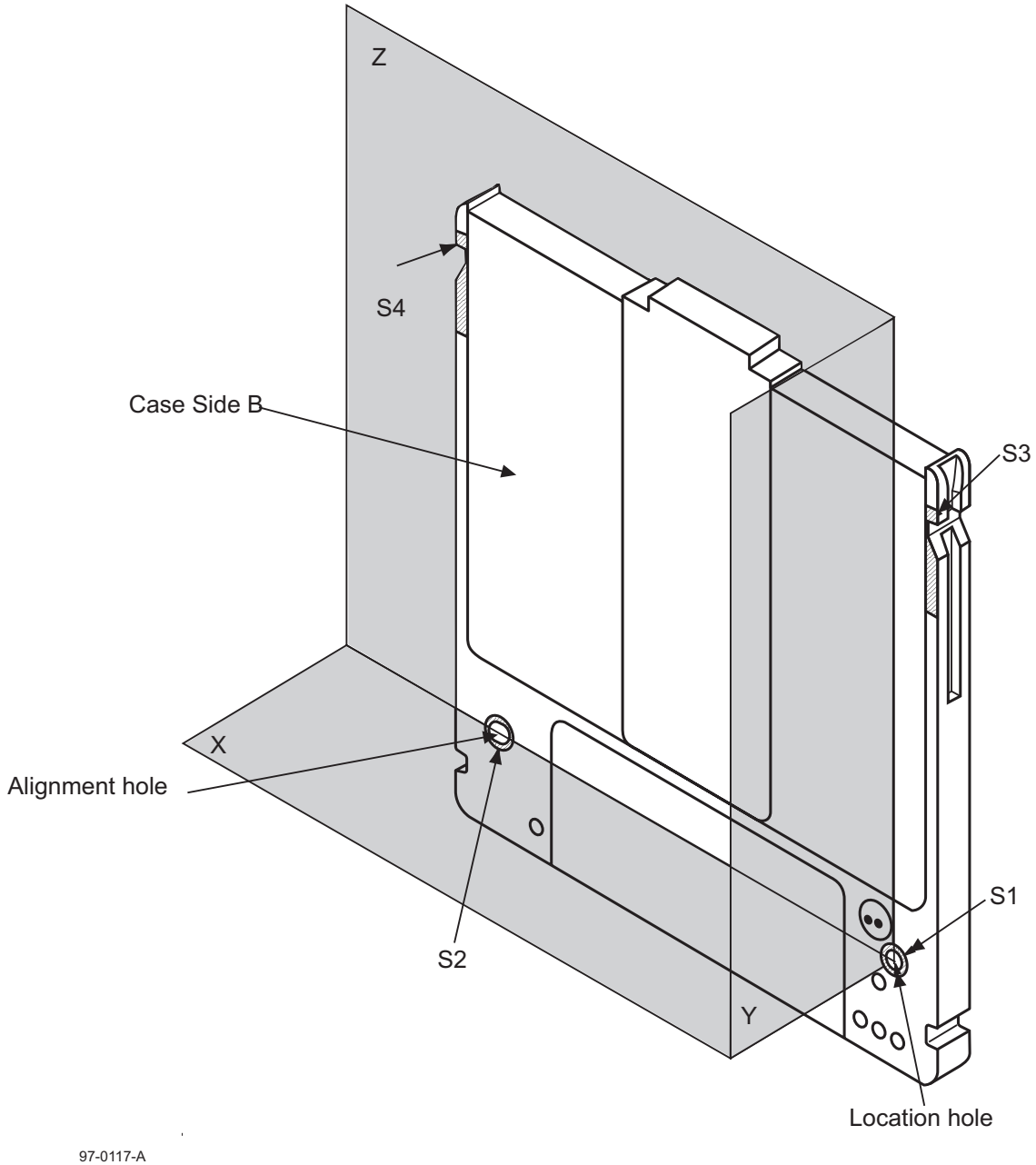

Figure A.1 - Position of the case

--`,,`-`-`,,`,,`,`,,`---
© ISO/IEC 2004 All rights reserved
Copyright International Organization for Standardization
Reproduced by IHS under license with ISO
No reproduction or networking permitted without license from IHS
Not for Resale

Annex B
(normative)

Edge distortion test of the case for 120 mm disk

The distortion test checks if the case is free from unacceptable distortions and protrusions along its edges. The test is made by causing the cartridge to pass through the vertical slot of a gauge.

B.1 Test gauge specification

The gauge shall be made of a suitable material, e.g. of chrome-plated carbon steel. The inner surfaces shall be polished to a surface finish of 5 µm peak-to-peak.

The dimensions shall be as follows (figure B.1):

L_a = 136,0 mm min.

L_b = 125,0 mm ± 0,1 mm

L_c = 8,0 mm ± 0,1 mm

L_d = 8,30 mm ± 0,02 mm

L_e = 8,8 mm min.

B.2 Requirements

When the cartridge is inserted vertically into the gauge, a vertical force of 1,5 N max. (without the cartridge weight) applied to the centre of the top edge of the cartridge shall cause the cartridge to pass through the gauge.

© ISO/IEC 2004 – All rights reserved
Copyright International Organization for Standardization
Reproduced by IHS under license with ISO
No reproduction or networking permitted without license from IHS
Not for Resale

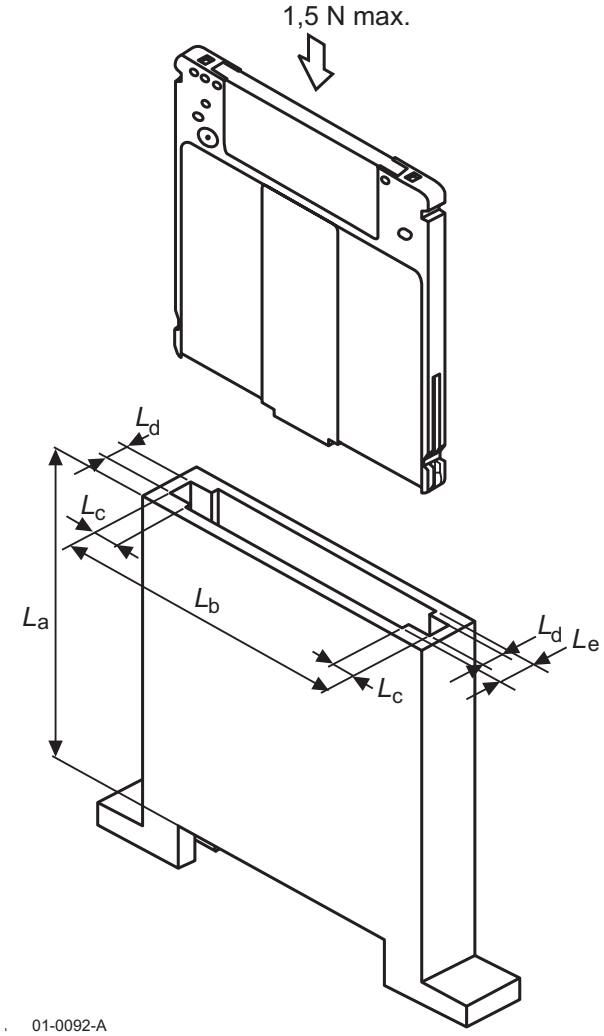

Figure B.1 - Distortion gauge

© ISO/IEC 2004 All rights reserved

Copyright International Organization for Standardization
Reproduced by IHS under license with ISO
No reproduction or networking permitted without license from IHS
Not for Resale

Annex C
(normative)

Compliance test of the case for 120 mm disk

The compliance test checks the flatness and flexibility of the case by forcing the four reference surfaces of the case into a plane. The test is made by placing the cartridge on the supports of a gauge and applying forces on the cartridge opposite to the supports.

C.1 Test gauge specification

The test gauge consists of a base plate on which four posts P_1, P_2, P_3 and P_4 are fixed so as to correspond to the four surfaces S1, S2, S3 and S4, respectively (figure C.1). The location of the four reference surfaces S1, S2, S3 and S4 is defined in 8.1.4 (figure 4) or 8.2.4 (figure 14).

The dimensions are as follows (figure C.2):

Posts P_1 and P_2

D_a = 6,50 mm ± 0,01 mm

D_b = 3,90 mm $^{+\ 0,02\ mm}_{-\ 0,00\ mm}$

L_f = 0,5 mm ± 0,1 mm

L_g = 3,0 mm ± 0,1 mm

The top area of posts P_1 and P_2 has a chamfer.

Posts P_3 and P_4

D_c = 5,00 mm ± 0,01 mm

After assembly, both the upper annular surfaces with outer diameter D_a of the two posts P_1 and P_2 and the upper surfaces of the two posts P_3 and P_4 shall lie between two horizontal planes spaced 0,01 mm apart.

Positions of four posts P_1, P_2, P_3 and P_4

Each centre of posts P_2, P_3 and P_4 shall be located at

L_h = 102,0 mm ± 0,1 mm

L_i = 11,0 mm ± 0,1 mm

L_j = 113,0 mm ± 0,1 mm

L_k = 90,0 mm ± 0,2 mm

from the centre of the post P_1.

The cartridge shall be placed with its reference surfaces onto the posts of the gauge placed horizontally. A vertical downward force of 1,0 N shall be exerted on the cartridge opposite each of the four posts.

C.2 Requirements

Under the conditions of C.1, three of the four surfaces S1 to S4 shall be in contact with the surface of their respective posts, and any gap between the remaining surface S and the surface of its post shall not exceed 0,1 mm.

© ISO/IEC 2004 – All rights reserved
Copyright International Organization for Standardization
Reproduced by IHS under license with ISO
No reproduction or networking permitted without license from IHS
Not for Resale

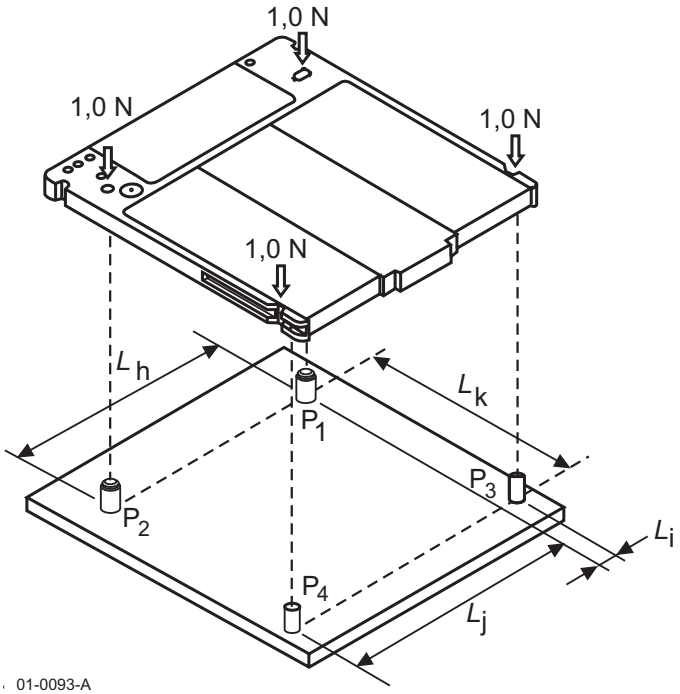

Figure C.1 - Compliance gauge

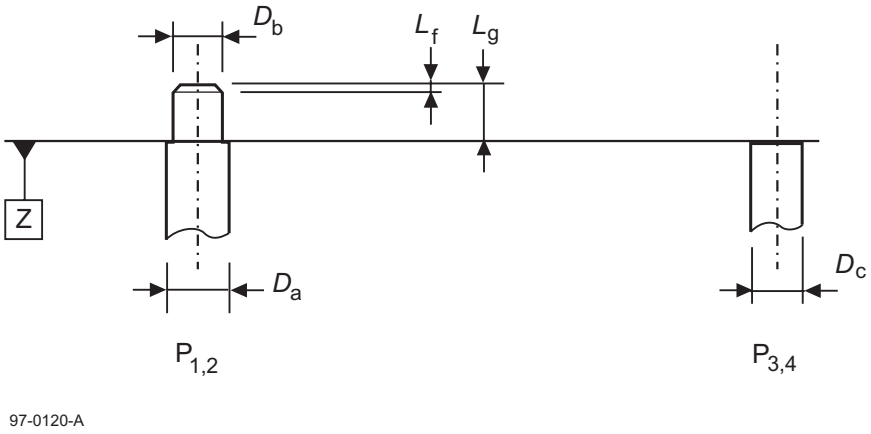

Figure C.2 - Detail of post

© ISO/IEC 2004 All rights reserved
Copyright International Organization for Standardization
Reproduced by IHS under license with ISO
No reproduction or networking permitted without license from IHS
Not for Resale

Annex D
(normative)

Position of the case for 80 mm disk relative to the Reference Planes

This annex shows the position of the case for 80 mm disk relative to the Reference Planes, as specified in 12.

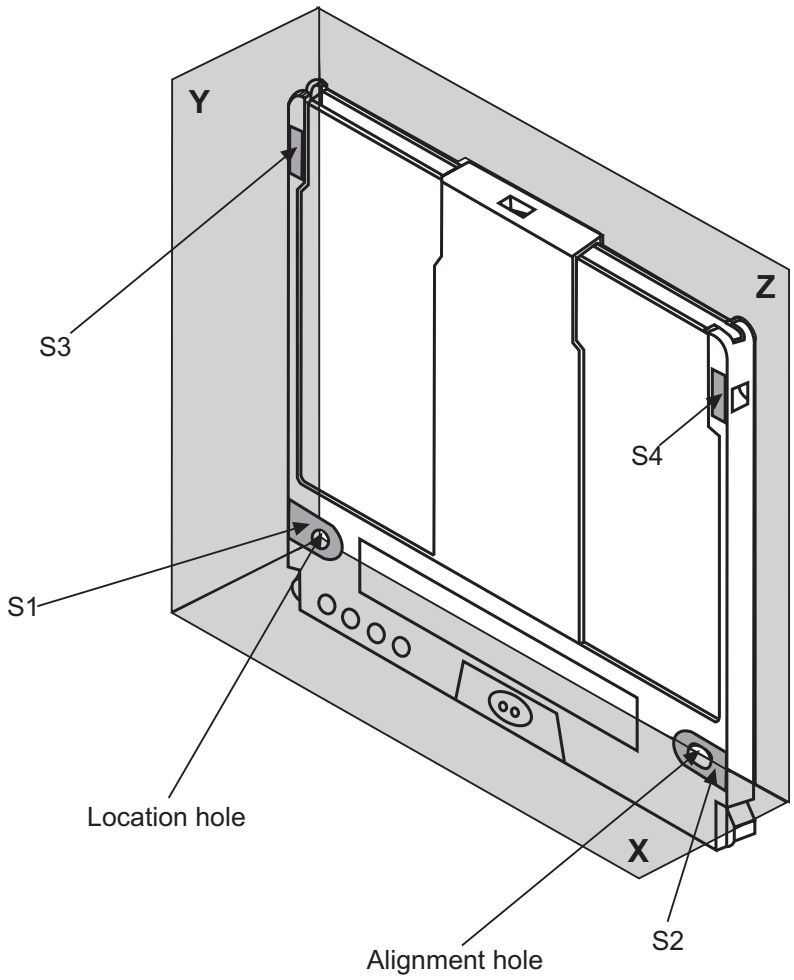

Figure D.1 - Position of the case

© ISO/IEC 2004 – All rights reserved
Copyright International Organization for Standardization
Reproduced by IHS under license with ISO
No reproduction or networking permitted without license from IHS
Not for Resale

Annex E
(normative)

Edge distortion test of the case for 80 mm disk

The distortion test checks if the case is free from unacceptable distortions and protrusions along its edges. The test is made by causing the cartridge to pass through the vertical slot of a gauge.

E.1 Test gauge specification

The gauge shall be made of a suitable material, e.g. of chrome-plated carbon steel. The inner surfaces shall be polished to a surface finish of 5 µm peak to peak.

The dimensions shall be as follows (figure E.1).

L_a = 92,0 mm min.

L_b = 89,6 mm ± 0,1 mm

L_c = 6,0 mm ± 0,1 mm

L_d = 5,70 mm ± 0,02 mm

L_e = 6,2 mm min.

E.2 Requirements

When the cartridge is inserted vertically into the gauge, a vertical force of 0,8 N max. (without the cartridge weight) applied to the center of the top edge of the cartridge shall cause the cartridge to pass through the gauge.

© ISO/IEC 2004 All rights reserved

Copyright International Organization for Standardization
Reproduced by IHS under license with ISO
No reproduction or networking permitted without license from IHS
Not for Resale

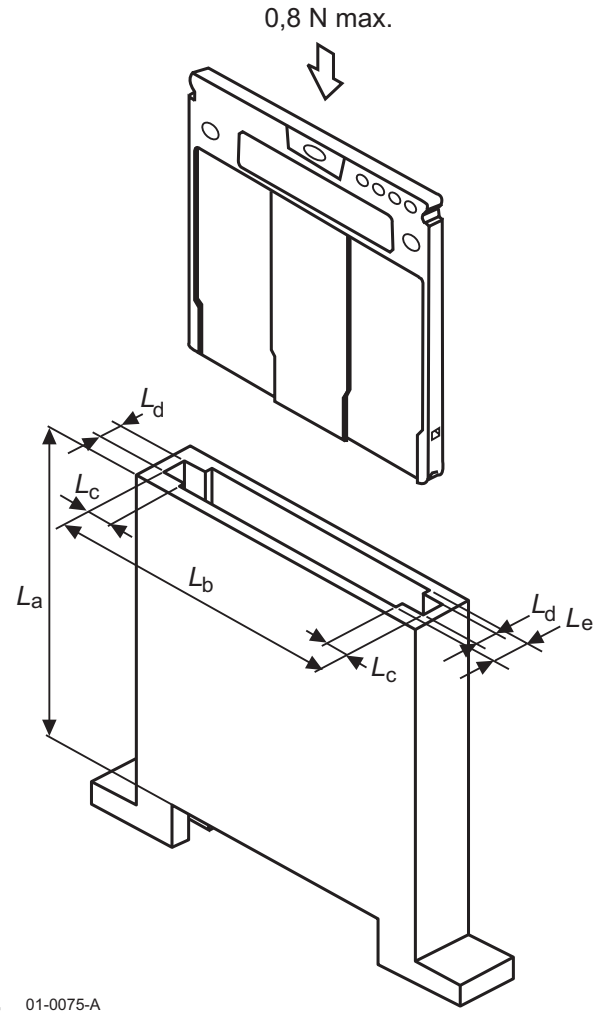

Figure E.1 - Distortion gauge

© ISO/IEC 2004 – All rights reserved
Copyright International Organization for Standardization
Reproduced by IHS under license with ISO
No reproduction or networking permitted without license from IHS
Not for Resale

Annex F
(normative)

Compliance test of the case for 80 mm disk

The compliance test checks the flatness and flexibility of the case by forcing the four reference surfaces of the case into a plane. The test is made by placing the cartridge on the supports of a gauge and applying forces on the cartridge opposite to the supports.

F.1 Test gauge specification

The test gauge consists of a base plate on which four posts P_1, P_2, P_3 and P_4 are fixed so as to correspond to the four surfaces S1, S2, S3 and S4, respectively (figure F.1). The location of the four reference surfaces S1, S2, S3 and S4 is defined in 12.1.4 (figure 26) or 12.2.4 (figure 37).

The dimensions are as follows (figure F.2):

Posts P_1 and P_2

D_a = 5,50 mm ± 0,01 mm

D_b = 2,90$^{+0,02\ mm}_{-0,00\ mm}$

L_f = 0,5 mm ± 0,1 mm

L_g = 3,0 mm ± 0,1 mm

The top area of posts P_1 and P_2 has a chamfer.

Posts P_3 and P_4

D_c = 4,00 mm ± 0,01 mm

After assembly, both the upper annular surfaces with outer diameter D_a of the two posts P_1 and P_2 and the upper surfaces of the two posts P_3 and P_4 shall lie between two horizontal planes spaced 0,01 mm apart.

Positions of four posts P_1, P_2, P_3 and P_4:

Each centre of posts P_2, P_3 and P_4 shall be located at

L_h = 74,0 mm ± 0,1 mm

L_i = 6,5 mm ± 0,1 mm

L_j = 80,5 mm ± 0,1 mm

L_k = 66,5 mm ± 0,2 mm

from the centre of the post P_1.

The cartridge shall be placed with its reference surfaces onto the posts of the horizontal gauge. A vertical downward force of 0,4 N shall be exerted on the cartridge opposite each of the four posts.

F.2 Requirements

Under the conditions of F.1, three of the four surfaces S1 to S4 shall be in contact with the annular surfaces of their respective posts, and any gap between the remaining surface S and the annular surface of its post shall not exceed 0,1 mm.

© ISO/IEC 2004 All rights reserved

Copyright International Organization for Standardization
Reproduced by IHS under license with ISO
No reproduction or networking permitted without license from IHS
Not for Resale

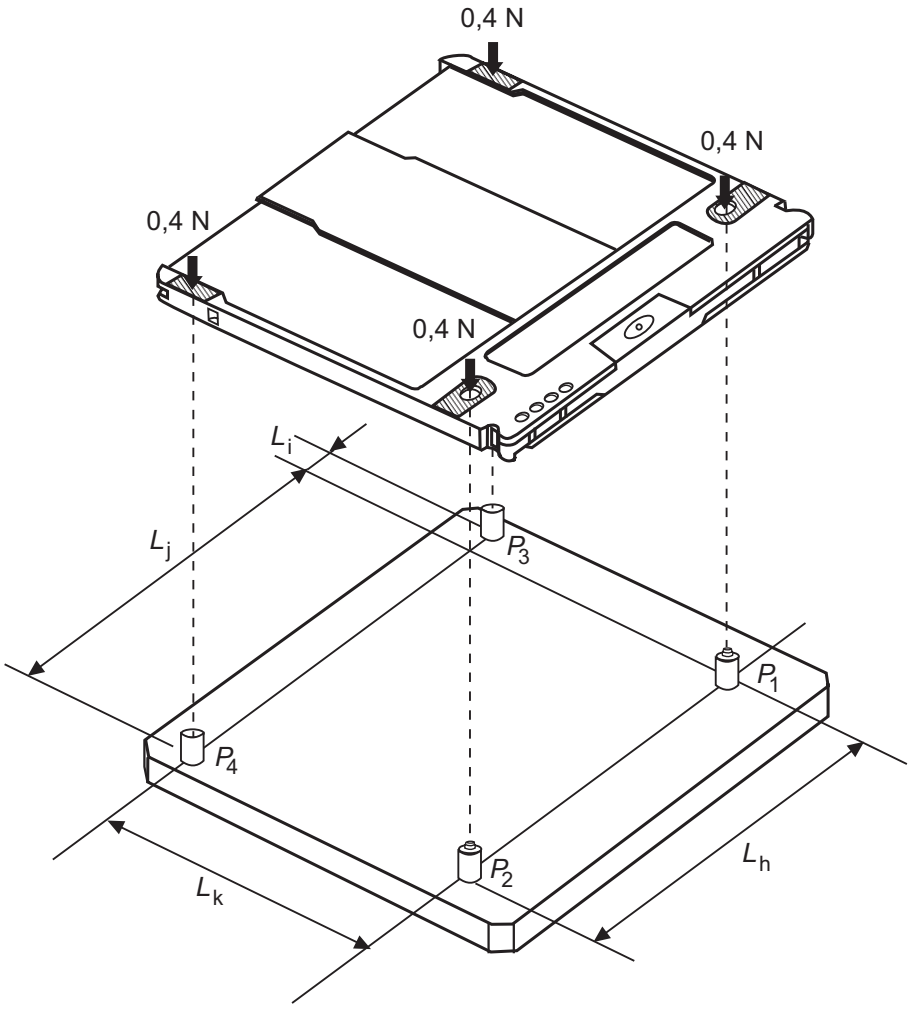

Figure F.1 - Compliance gauge

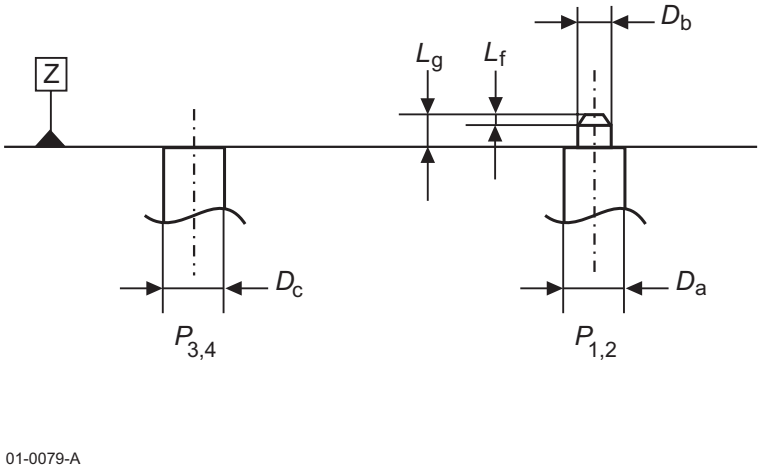

Figure F.2 - Detail of posts

© ISO/IEC 2004 – All rights reserved
Copyright International Organization for Standardization
Reproduced by IHS under license with ISO
No reproduction or networking permitted without license from IHS
Not for Resale

Annex G
(normative)

Shutter opening force test of the case for 80 mm disk

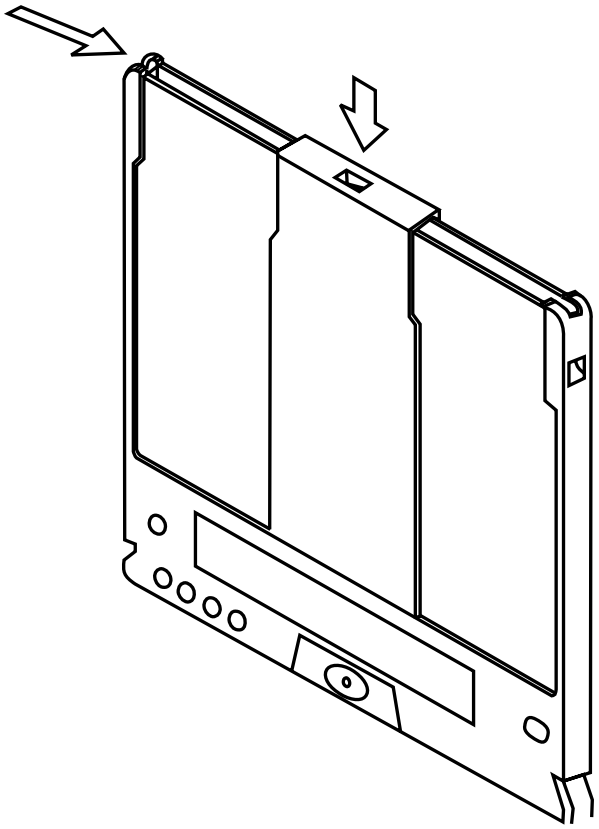

Figure G.1 - Measuring method of shutter opening force

Copyright International Organization for Standardization
Reproduced by IHS under license with ISO
No reproduction or networking permitted without license from IHS
Not for Resale

© ISO/IEC 2004 All rights reserved

Annex H
(informative)

Examples of an opening cover for a Type 2 case, a Type 3 case, a Type 4 case or a Type 5 case

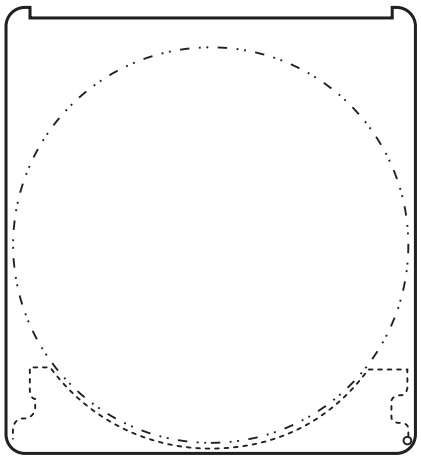

Cover closed

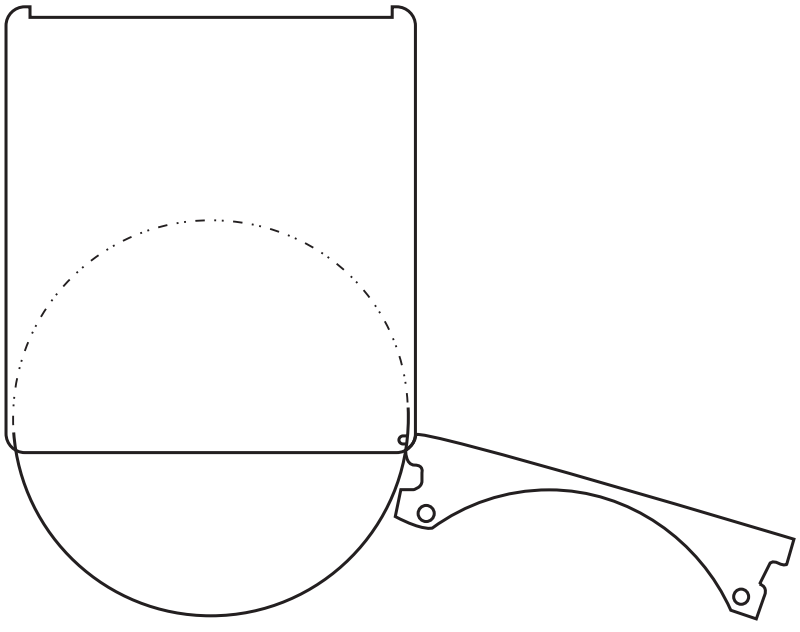

Cover open

97-0121-A

Figure H.1 - First example of an opening cover

Copyright International Organization for Standardization
Reproduced by IHS under license with ISO
No reproduction or networking permitted without license from IHS
Not for Resale
© ISO/IEC 2004 – All rights reserved

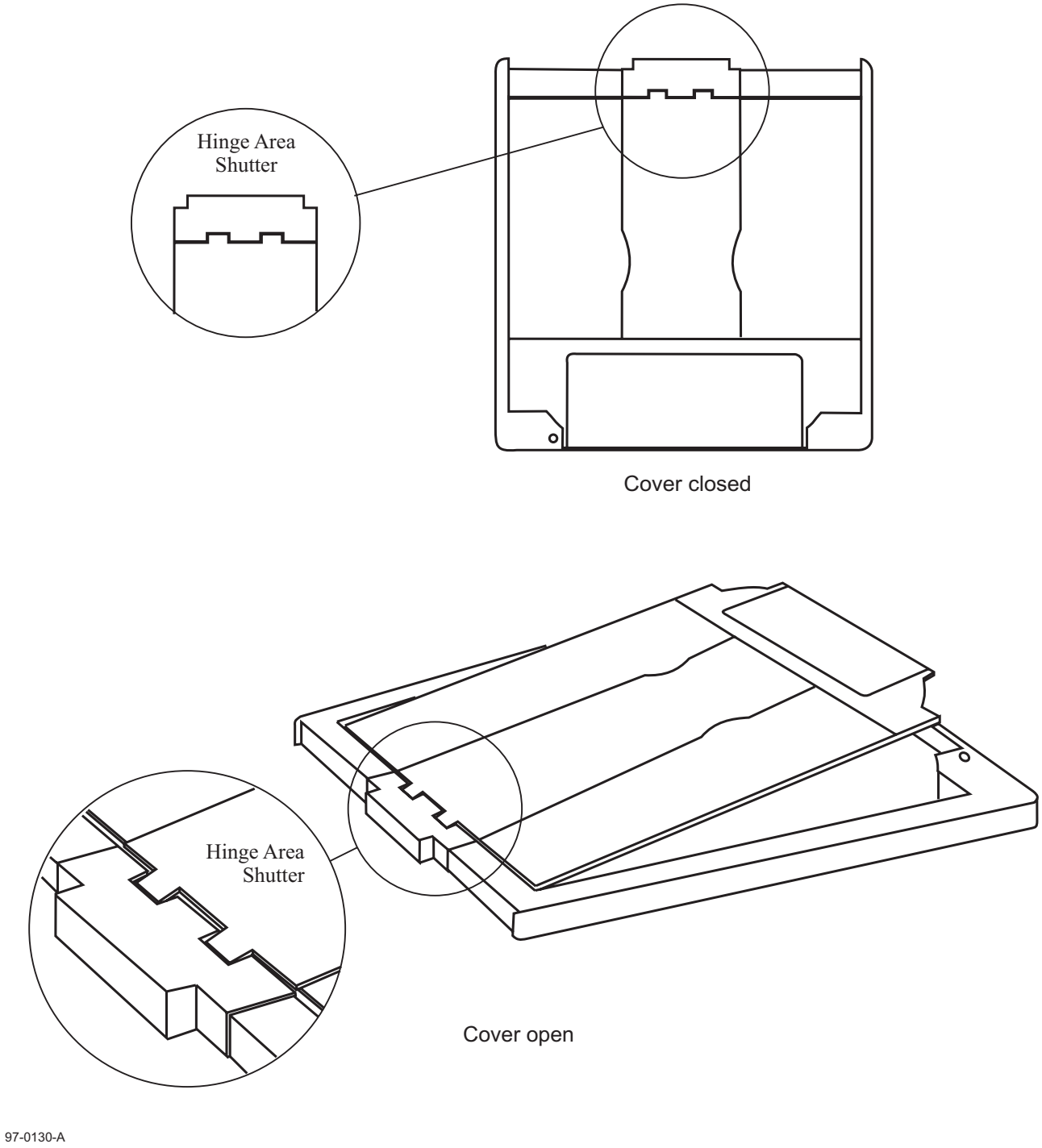

Figure H.2 - Second example of an opening cover

© ISO/IEC 2004 All rights reserved

Copyright International Organization for Standardization
Reproduced by IHS under license with ISO
No reproduction or networking permitted without license from IHS
Not for Resale

Annex J
(informative)

Connection between disk holder and body of the case for 80 mm disk

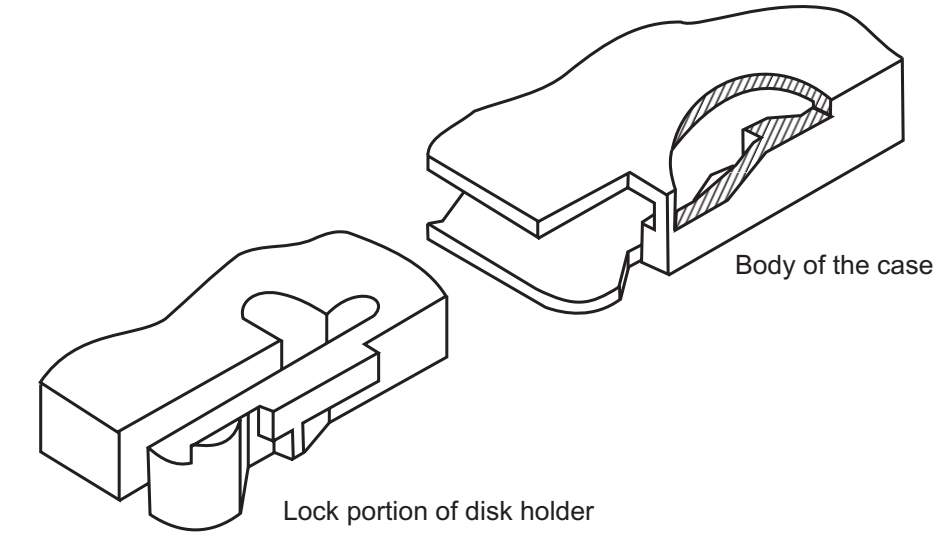

Figure J.1 - Connection between lock portion of disk holder and body

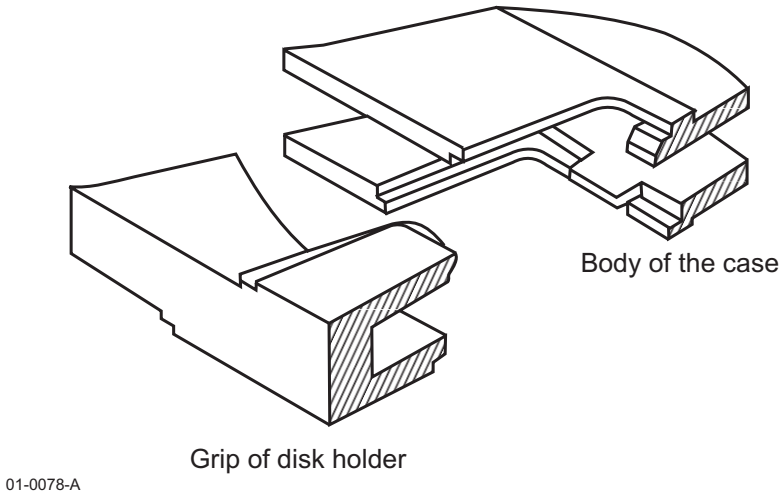

Figure J.2 - Connection between grip of disk holder and body

Copyright International Organization for Standardization
Reproduced by IHS under license with ISO
No reproduction or networking permitted without license from IHS
© ISO/IEC 2004 – All rights reserved
Not for Resale

Annex K
(informative)

Transportation

K.1 General

As transportation occurs under a wide range of temperature and humidity variations, for differing periods, by many methods of transport and in all parts of the world it is not possible to specify conditions for transportation or for packaging.

K.2 Packaging

The form of packaging should be agreed between sender and recipient or, in the absence of such agreement, is the responsibility of the sender. It should take account of the following hazards.

K.2.1 Temperature and Humidity

Insulation and wrapping should be designed to maintain the conditions for storage over the estimated period of transportation.

K.2.2 Impact loads and vibration

Avoid mechanical loads that would distort the shape of the case or cartridge.

Avoid dropping the case or cartridge.

Cases or cartridges should be packed in a rigid box containing adequate shock-absorbent material.

The final box should have a clean interior and a construction that provides sealing to prevent the ingress of dirt and moisture.

© ISO/IEC 2004 All rights reserved

Copyright International Organization for Standardization
Reproduced by IHS under license with ISO
No reproduction or networking permitted without license from IHS
Not for Resale

ICS 35.220.30

Price based on 115 pages

© ISO/IEC 2004 – All rights reserved
Copyright International Organization for Standardization
Reproduced by IHS under license with ISO
No reproduction or networking permitted without license from IHS
Not for Resale