INTERNATIONAL STANDARD

**ISO/IEC 17310**

First edition
2000-09-15

# Information technology — Telecommunications and information exchange between systems — Private Integrated Services Network — Mapping functions for the employment of 64 kbit/s circuit mode connections with 16 kbit/s sub-multiplexing

*Technologies de l'information — Télécommunications et échange d'information entre systèmes — Réseau privé avec intégration de services — Fonctions d'application pour l'emploi de connexions en mode circuit de 64 kbits/s avec sous-multiplexage de 16 kbits/s*

Reference number
ISO/IEC 17310:2000(E)

© ISO/IEC 2000

Copyright International Organization for Standardization
Provided by IHS under license with ISO
No reproduction or networking permitted without license from IHS

Not for Resale

**PDF disclaimer**

This PDF file may contain embedded typefaces. In accordance with Adobe's licensing policy, this file may be printed or viewed but shall not be edited unless the typefaces which are embedded are licensed to and installed on the computer performing the editing. In downloading this file, parties accept therein the responsibility of not infringing Adobe's licensing policy. The ISO Central Secretariat accepts no liability in this area.

Adobe is a trademark of Adobe Systems Incorporated.

Details of the software products used to create this PDF file can be found in the General Info relative to the file; the PDF-creation parameters were optimized for printing. Every care has been taken to ensure that the file is suitable for use by ISO member bodies. In the unlikely event that a problem relating to it is found, please inform the Central Secretariat at the address given below.

© ISO/IEC 2000

All rights reserved. Unless otherwise specified, no part of this publication may be reproduced or utilized in any form or by any means, electronic or mechanical, including photocopying and microfilm, without permission in writing from either ISO at the address below or ISO's member body in the country of the requester.

ISO copyright office
Case postale 56 • CH-1211 Geneva 20
Tel. + 41 22 749 01 11
Fax + 41 22 749 09 47
E-mail copyright@iso.ch
Web www.iso.ch

Printed in Switzerland



Copyright International Organization for Standardization
Provided by IHS under license with ISO
No reproduction or networking permitted without license from IHS
Not for Resale

© ISO/IEC 2000 – All rights reserved

## Contents

Foreword ..... iv

Introduction ..... v

**1** Scope ..... **1**

**2** Conformance ..... **1**

**3** Normative references ..... **1**

**4** Definitions ..... **2**
**4.1** External definitions ..... **2**
**4.2** Special definitions ..... **2**
**4.2.1** Channel. ..... **2**
**4.2.2** End PINX. ..... **2**
**4.2.3** Inter-PINX Connection. ..... **2**
**4.2.4** Inter-PINX Link ..... **2**
**4.2.5** Transit PINX ..... **2**

**5** Abbreviations ..... **2**

**6** Introduction ..... **2**

**7** Capabilities at the Q reference point ..... **3**

**8** Mapping functions ..... **3**
**8.1** Physical adaptation ..... **3**
**8.1.1** 64 kbit/s Unrestricted Digital Leased Line (D64U) ..... **3**
**8.2** Mapping Matrix ..... **4**
**8.2.1** Channel allocation ..... **4**
**8.2.2** Bearer Conditioning for the $D_Q$-channel ..... **4**
**8.2.3** Bearer Conditioning for the $U_Q$-channels ..... **4**

**Annexes**

**A** Implementation Conformance Statement (ICS) Proforma ..... **5**

**B** Bibliography ..... **8**

**C** QSIG Protocol Codepoints ..... **9**

**D** Example figure for Bearer Conditioning of $U_Q$-channels ..... **10**

© ISO/IEC 2000 – All rights reserved

Copyright International Organization for Standardization
Provided by IHS under license with ISO
No reproduction or networking permitted without license from IHS
Not for Resale

## Foreword

ISO (the International Organization for Standardization) and IEC (the International Electrotechnical Commission) form the specialized system for worldwide standardization. National bodies that are members of ISO or IEC participate in the development of International Standards through technical committees established by the respective organization to deal with particular fields of technical activity. ISO and IEC technical committees collaborate in fields of mutual interest. Other international organizations, governmental and non-governmental, in liaison with ISO and IEC, also take part in the work.

International Standards are drafted in accordance with the rules given in the ISO/IEC Directives, Part 3.

In the field of information technology, ISO and IEC have established a joint technical committee, ISO/IEC JTC 1. Draft International Standards adopted by the joint technical committee are circulated to national bodies for voting. Publication as an International Standard requires approval by at least 75 % of the national bodies casting a vote.

Attention is drawn to the possibility that some of the elements of this International Standard may be the subject of patent rights. ISO and IEC shall not be held responsible for identifying any or all such patent rights.

International Standard ISO/IEC 17310 was prepared by ECMA (as ECMA-253) and was adopted, under a special “fast-track procedure”, by Joint Technical Committee ISO/IEC JTC 1, *Information technology*, in parallel with its approval by national bodies of ISO and IEC.

Annex A forms a normative part of this International Standard. Annexes B, C and D are for information only.



--`,,```,,,,````-`-`,,`,,`,`,,`---
© ISO/IEC 2000 – All rights reserved
Copyright International Organization for Standardization
Provided by IHS under license with ISO
No reproduction or networking permitted without license from IHS
Not for Resale

## Introduction

This International Standard is one of a series of standards defining mapping functions in exchanges of Private Integrated Services Networks. The series uses the ISDN concepts as developed by ITU-T (formerly CCITT) and is also within the framework of standards for open systems interconnection as defined by ISO/IEC.

This International Standard specifies mapping functions for the type of scenario where two PINXs are interconnected via a 64 kbit/s circuit mode connection with 16 kbit/s sub-multiplexing.

This International Standard is based upon the practical experience of ECMA member companies and the results of their active and continuous participation in the work of ISO/IEC JTC 1, ITU-T, ETSI and other international and national standardization bodies. It represents a pragmatic and widely based consensus.

© ISO/IEC 2000 – All rights reserved

Copyright International Organization for Standardization
Provided by IHS under license with ISO
No reproduction or networking permitted without license from IHS
Not for Resale

# Information technology - Telecommunications and information exchange between systems - Private Integrated Services Network - Mapping functions for the employment of 64 kbit/s circuit mode connections with 16 kbit/s sub-multiplexing

## 1 Scope

This International Standard defines the mapping functions in exchanges of Private Integrated Services Networks (PISNs) required for the utilization of scenarios in which 64 kbit/s circuit mode connections are sub-multiplexed into 4 x 16 kbit/s channels for carrying inter-PINX signalling and user information.

NOTE 1 - This International Standard has been prepared to meet the specific needs of an application for a particular user organisation. However, it may also be applicable elsewhere. The requirements contained in this International Standard will be incorporated in any future standard specifying a more generic approach to bearer conditioning.

In order to connect a Private Integrated Services Network Exchange (PINX) to another PINX, mapping functions are required to adapt the specific interfaces at the C reference point to the application at the Q reference point. As such, mapping functions provide for physical adaptation to the interface at the C reference point. Mapping functions also provide for the mapping of user channels and signalling information at the Q reference point to the appropriate channels or timeslots at the C reference point.

The C and Q reference points are defined in ISO/IEC 11579-1.

The type of interface at the C reference point covered by this International Standard is the 64 kbit/s Unrestricted Digital Leased Line (D64U) Terminal Equipment Interface, in accordance with ITU-T Rec. G.703.

At the Q reference point the mapping provides a 16 kbit/s service for user channels to support the transfer of unrestricted digital information and to support the transfer of speech, and a packet mode service for the signalling channel. The applied mapping is a static mapping, i.e. there is a fixed relationship between user and signalling channels at the Q reference point and the interface at the C reference point.

Management functions relating to failure management are outside the scope of this International Standard.

This International Standard is applicable to PINXs that can be interconnected to form a Private Integrated Services Network (PISN) and that support signalling protocols at the Q reference point.

## 2 Conformance

In order to conform to this International Standard, a PINX shall satisfy the requirements identified in the Implementation Conformance Statement (ICS) proforma in annex A.

## 3 Normative references

The following normative documents contain provisions which, through reference in this text, constitute provisions of this International Standard. For dated references, subsequent amendments to, or revisions of, any of these publications do not apply. However, parties to agreements based on this International Standard are encouraged to investigate the possibility of applying the most recent editions of the normative documents indicated below. For undated references, the latest edition of the normative document referred to applies. Members of ISO and IEC maintain registers of currently valid International Standards.

ISO/IEC 11579-1:1994, *Information technology — Telecommunications and information exchange between systems — Private Integrated Services Network — Part 1: Reference configuration for PISN exchanges (PINX).*

ITU-T Rec. G.703:1998, *Physical / electrical characteristics of hierarchical digital interfaces.*

ITU-T Rec. Q.920:1993, *Digital Subscriber Signalling System No. 1 (DSS1) — ISDN user-network interface data link layer — General aspects*.

ITU-T Rec. Q.920 Am. 1:2000, *Amendment 1 to ITU-T Recommendation Q.920*.

ITU-T Rec. Q.921:1997, *ISDN user-network interface — Data link layer specification*.

--`,,```,,,,````-`-`,,`,,`,`,,`---
© ISO/IEC 2000 – All rights reserved

Copyright International Organization for Standardization
Provided by IHS under license with ISO
No reproduction or networking permitted without license from IHS
Not for Resale

ITU-T Rec. Q.921 Am. 1:2000, *Amendment 1 to ITU-T Recommendation Q.921*.

ITU-T Rec. I.112:1993, *Vocabulary of terms for ISDNs*.

ITU-T Rec. I.460:1999, *Multiplexing, rate adaption and support of existing interfaces*.

NOTE 2 - This International Standard also contains informative references. Details of these publications are given in annex B.

# 4 Definitions

## 4.1 External definitions

For the purposes of this International Standard, the following external definitions apply.

– Integrated Services Digital Network (CCITT Rec. I.112)

– Private Integrated Services Network (ISO/IEC 11579-1)

– Private Integrated Services Network Exchange (ISO/IEC 11579-1)

## 4.2 Special definitions

**4.2.1 Channel :** A means of bi-directional transmission of user or signalling information between two points.

**4.2.1.1 $D_Q$-Channel :** A channel used to convey call control information between the Q reference points of two peer PINXs.

**4.2.1.2 $U_Q$-Channel :** A channel used to convey user information between the Q reference points of two PINXs.

**4.2.2 End PINX :** In the context of a particular call, a PINX to which one of the users is attached (Originating PINX or Terminating PINX) or a PINX at which signalling interworking occurs (Gateway PINX).

**4.2.3 Inter-PINX Connection :** A connection provided by an IVN between two C reference points used to transport inter-PINX information from the PISN control plane and/or the PISN user plane.

**4.2.4 Inter-PINX Link :** A link between the Q reference points of two PINXs, comprising the totality of signalling transfer and user information transfer means.

**4.2.5 Transit PINX :** In the context of a particular call, any PINX, excluding the End PINXs, through which the call passes.

# 5 Abbreviations

| | |
|---|---|
| ICS | Implementation Conformance Statement |
| IPC | Inter-PINX Connection |
| IPL | Inter-PINX Link |
| ISDN | Integrated Services Digital Network |
| LD-CELP | Low-Delay Code Excited Linear Prediction |
| MP | MaPping functional grouping |
| PINX | Private Integrated Services Network Exchange |
| PISN | Private Integrated Services Network |

# 6 Introduction

This International Standard specifies mapping functions for the following scenario:

– Dedicated 64 kbit/s circuit mode connection with 16 kbit/s sub-multiplexing.

  This scenario consists of a dedicated 64 kbit/s circuit mode connection in a point-to-point configuration, and offering at the C reference point an interface with a single 64 kbit/s channel. This 64 kbit/s channel is sub-multiplexed by the Mapping (MP) functional grouping into 4 x 16 kbit/s channels. Where such a channel is used for carrying speech, a speech compression function is also provided.

--`,,```,,,,````-`-`,,`,,`,`,,`---



© ISO/IEC 2000 – All rights reserved
Copyright International Organization for Standardization
Provided by IHS under license with ISO
No reproduction or networking permitted without license from IHS
Not for Resale

The applied mapping is a static mapping. There is a fixed relationship between user and signalling channels at the Q reference point and the interface at the C reference point.

Administrative actions to apply the mapping are necessary at both sides of an IPL.

At the C reference point more than one instance of the interface type may exist.

NOTE 3 - For more information refer to ECMA TR/76 clause 7.

# 7 Capabilities at the Q reference point

For each instance of the Q reference point:

– 3 user channels ($U_Q$); and

– 1 signalling channel ($D_Q$) for carrying the inter-PINX layer 3 signalling protocol

are provided. The user channels are numbered 1..3.

For a $U_Q$-channel the following bearer capabilities shall be provided:

– information transfer rate: 16 kbit/s

– information transfer capability: speech, or
unrestricted digital information

– user information layer 1 protocol: ITU-T Rec. G.728 16 kbit/s LD-CELP

– Other attributes shall be the same as at the C reference point.

NOTE 4 - The user information layer 1 protocol is only specified as "LD-CELP" for the case where the information transfer capability is "speech". In the case where the information transfer capability is "unrestricted digital information", no user information layer 1 protocol is specified; it is an end-to-end matter between terminal equipments attached to a PISN.

NOTE 5 - Annex C (informative) specifies the codepoints to be used by the QSIG protocol when implementing the mapping arrangements specified in this International Standard.

For a $D_Q$-channel the following bearer capability shall be provided:

– Transfer mode: packet mode

– Information transfer capability: unrestricted digital information

– Information transfer rate: 16 kbit/s

– Other attributes shall be the same as at the C reference point.

The functions to map $D_Q$ and $U_Q$ channels to an inter-PINX connection (IPC) at the C reference point are described in clause 8.

# 8 Mapping functions

The PINX mapping functions shall meet the following requirements.

## 8.1 Physical adaptation

A PINX shall support the following physical adaptation:

### 8.1.1 64 kbit/s Unrestricted Digital Leased Line (D64U)

Layer 1 termination shall be in accordance with the requirements of co-directional interfaces at 64 kbit/s, specified in ITU-T Rec. G.703.

NOTE 6 - ETS 300 290 provides additional information about this interface type.

At the C reference point, the interface described in this clause provides for one IPC with the following bearer capability:

– Information transfer mode: circuit mode

– Information transfer capability: unrestricted digital information

– Information transfer rate: 64 kbit/s.

--`,,```,,,,````-`-`,,`,,`,`,,`---

© ISO/IEC 2000 – All rights reserved

Copyright International Organization for Standardization
Provided by IHS under license with ISO
No reproduction or networking permitted without license from IHS
Not for Resale

The physical adaptation part of the mapping function shall maintain a fixed relationship between a 64 kbit/s IPC and the 16 kbit/s channels perceived at the Q reference point, according to the requirements for fixed format multiplexing specified in CCITT Rec. I.460 (§ 2.1.1).

NOTE 7 - CCITT Rec. I.460 assumes bit positions in the 64 kbit/s octet are numbered from 1 to 8 with bit position 1 being the first transmitted. According to CCITT Rec. G.711, bit position 1 corresponds to the most significant bit of the octet in an A-law PCM bitstream. By extrapolation, this convention is also true for an LD-CELP bitstream encoded according to ITU-T Rec. G.728. For signalling information (e.g., HDLC at layer 2, QSIG at layer 3) bit 1 corresponds to the least significant bit in the octet. These conventions are maintained by this International Standard.

Each 64 kbit/s IPC shall be sub-multiplexed into 4 16 kbit/s channels. Each 16 kbit/s channel shall be mapped to a pair of bit positions in the 64 kbit/s IPC as follows:

– The first 16 kbit/s channel shall be mapped to bit positions 1 and 2;

– The second 16 kbit/s channel shall be mapped to bit positions 3 and 4;

– The third 16 kbit/s channel shall be mapped to bit positions 5 and 6; and

– The fourth 16 kbit/s channel shall be mapped to bit positions 7 and 8.

## 8.2 Mapping Matrix

The mapping matrix provides for the bearer conditioning and mapping of channels at the Q reference point to the channels provided by the physical adaptation function.

### 8.2.1 Channel allocation

A PINX shall support the mapping of a single instance of the Q reference point on to a single interface at the C reference point. Each channel at the Q reference point shall be mapped to a 16 kbit/s channel in the 64 kbit/s interface at the C reference point as follows:

– The $D_Q$-channel shall be mapped to the first 16 kbit/s channel;

– $U_Q$-channel number 1 shall be mapped to the second 16 kbit/s channel;

– $U_Q$-channel number 2 shall be mapped to the third 16 kbit/s channel; and

– $U_Q$-channel number 3 shall be mapped to the fourth 16 kbit/s channel.

### 8.2.2 Bearer Conditioning for the $D_Q$-channel

The signalling carriage mechanism connection (layer 2) on a $D_Q$-channel shall be according to the symmetrical application in annex A of ITU-T Rec. Q.920 and annex J of ITU-T Rec. Q.921.

The SM / SREJ option, defined in annex E of ITU-T Rec. Q.921, shall not apply.

At installation time one of the sides of the $D_Q$-channel shall be designated as 'master' and the other side of the $D_Q$-channel as 'slave'.

### 8.2.3 Bearer Conditioning for the $U_Q$-channels

No bearer conditioning of the $U_Q$-channels is necessary.

NOTE 8 - Annex D gives an example for the arrangement of functional groupings.

NOTE 9 - A PINX may need to rate-adapt incoming user information to its internal channel rate to permit internal switching and processing.

For those calls in which it is acting as a Transit PINX, a PINX shall:

– map $U_Q$-channels at the Outgoing side into the outgoing 64 kbit/s IPC as specified in 8.2.1 above;

– neither decompress received user information nor re-compress transmitted user information.


© ISO/IEC 2000 – All rights reserved
Copyright International Organization for Standardization
Provided by IHS under license with ISO
No reproduction or networking permitted without license from IHS
Not for Resale

# Annex A

(normative)

## Implementation Conformance Statement (ICS) Proforma

## A.1 Introduction

The supplier of a protocol implementation which is claimed to conform to this International Standard shall complete the Implementation Conformance Statement (ICS) proforma in A.3.

A completed ICS proforma is the ICS for the implementation in question. The ICS is a statement of which capabilities and options have been implemented. The ICS can have a number of uses, including use:

by the equipment implementer, as a check list to reduce the risk of failure to conform to the Standard through oversight;

by the supplier and acquirer, or potential acquirer, of the implementation, as a detailed indication of the capabilities of the implementation, stated relative to the common basis for understanding provided by the Standard's ICS proforma;

by the user or potential user of an implementation, as a basis for initially checking the possibility of interworking with another implementation. While interworking can never be guaranteed, failure to interwork can often be predicted from incompatible ICSs.

## A.2 Instructions for completing the ICS proforma

### A.2.1 General structure of the ICS proforma

The ICS proforma is a fixed-format questionnaire divided into subclauses each containing a group of individual items. Each item is identified by an item number, the name of the item (question to be answered), and the reference(s) to the clause(s) that specifies (specify) the item in the main body of this International Standard.

The "Status" column indicates whether an item is applicable and if so whether support is mandatory or optional. The following terms are used:

| | |
|---|---|
| m | mandatory (the capability is required for conformance); |
| o | optional (the capability is not required for conformance, but if the capability is implemented it is required to conform to the specifications); |
| o.<n> | optional, but support of at least one of the group of options labelled by the same numeral <n> is required; |
| x | prohibited; |
| c.<cond> | conditional requirement, depending on support for the item or items listed in condition <cond>; |
| <item>:m | simple conditional requirement, the capability being mandatory if item number <item> is supported, otherwise not applicable; |
| <item>:o | simple conditional requirement, the capability being optional if item number <item> is supported, otherwise not applicable; |

Answers to the questionnaire items are to be provided either in the "Support" column, by simply marking an answer to indicate restricted choice (Yes) or (No), or in the "Not Applicable" column (N/A).

### A.2.2 Additional information

Items of Additional Information allow a supplier to provide further information intended to assist the interpretation of the ICS. It is not intended that a large quantity will be supplied, and an ICS can be considered complete without such information. Examples might be an outline of the ways in which a (single) implementation can be set up to operate in a variety of environments and configurations.

References to items of Additional Information may be entered next to any answer in the questionnaire, and may be included in items of Exception Information.

© ISO/IEC 2000 – All rights reserved

Copyright International Organization for Standardization
Provided by IHS under license with ISO
No reproduction or networking permitted without license from IHS
Not for Resale

### A.2.3 Exception information

It may occasionally happen that a supplier will wish to answer an item with mandatory or prohibited status (after any conditions have been applied) in a way that conflicts with the indicated requirement. No pre-printed answer will be found in the support column for this. Instead, the supplier is required to write into the support column an x.<i> reference to an item of Exception Information, and to provide the appropriate rationale in the Exception item itself.

An implementation for which an Exception item is required in this way does not conform to this International Standard. A possible reason for the situation described above is that a defect in the Standard has been reported, a correction for which is expected to change the requirement not met by the implementation.

## A.3 ICS proforma for PINX implementation

### A.3.1 Implementation identification

| | |
|---|---|
| Supplier | |
| Contact point for queries about the ICS | |
| Implementation name(s) and version(s) | |
| Other information necessary for full identification, e.g. name(s) and version(s) for machines and/or operating systems; system name(s) | |

Only the first three items are required for all implementations; other information may be completed as appropriate in meeting requirements for full identification.

The terms name and version should be interpreted appropriately to correspond with a supplier's terminology (e.g. type, series, model).

### A.3.2 Implementation summary

| | |
|---|---|
| Implementation version | 1.0 |
| Addenda implemented (if applicable) | |
| Amendments implemented | |
| Have any exception items been required (see A.2.3)? | No [ ] Yes [ ]<br>(The answer Yes means that the implementation does not conform to this International Standard) |

| | |
|---|---|
| Date of statement | |


© ISO/IEC 2000 – All rights reserved
Copyright International Organization for Standardization
Provided by IHS under license with ISO
No reproduction or networking permitted without license from IHS
Not for Resale

### A.3.3 General

| Item | Name of Item | Reference | Status | N/A | Support |
|---|---|---|---|---|---|
| A1 | Support of 64 kbit/s unrestricted digital leased line (D64U) interface with 16 kbit/s sub-multiplexing | 8.1.1 | m | | Yes [ ] |
| A2 | Support of prescribed channel allocation | 8.2.1 | m | | Yes [ ] |
| A3 | Support of bearer conditioning for the $D_Q$-channel | 8.2.2 | m | | Yes [ ] |
| A4 | Support of bearer conditioning for the $U_Q$-channel | 8.2.3 | m | | Yes [ ] |

© ISO/IEC 2000 – All rights reserved

Copyright International Organization for Standardization
Provided by IHS under license with ISO
No reproduction or networking permitted without license from IHS
Not for Resale

# Annex B

(informative)

## Bibliography


| | |
|---|---|
| CCITT Rec. G.711 (1988) | *Pulse code modulation (PCM) of voice frequencies.* |
| ECMA TR/76 (1999) | *Private Integrated Services Network (PISN) — Architecture and Scenarios for Private Integrated Services Networking.* |
| ETS 300 290 (1994) | *Business Telecommunications (BTC); 64 kbit/s digital unrestricted leased line with octet integrity (D64U) Terminal equipment interface.* |
| ITU-T Rec. G.728 (1992) | *Coding of speech at 16 kbit/s using low-delay code excited linear prediction.* |




© ISO/IEC 2000 – All rights reserved

Copyright International Organization for Standardization
Provided by IHS under license with ISO
No reproduction or networking permitted without license from IHS

Not for Resale

# Annex C

(informative)

## QSIG Protocol Codepoints

This International Standard defines the mapping functions for the following bearer capabilities at the Q reference point:

1) Speech:
   - information transfer rate: 16 kbit/s
   - information transfer capability: speech
   - user information layer 1 protocol: ITU-T Rec. G.728 16 kbit/s LD-CELP

2) Unrestricted digital:
   - information transfer rate: 16 kbit/s
   - information transfer capability: unrestricted digital information.

Support of these bearer capabilities by a PINX requires the use of additional, ISO / IEC defined, codepoints in the Bearer capability information element of the QSIG protocol, as follows:

| **Octet & field** | **Codepoint** | **Meaning** |
|---|---|---|
| Octet 3 - Coding standard: | 0 1 | ISO / IEC Standard |
| Octet 4 - Information transfer rate: | 1 0 0 1 0 | 16 kbit/s |
| Octet 5 - User information layer 1 protocol | 0 1 0 1 0 | G.728<br>LD-CELP |

--`,,```,,,,````-`-`,,`,,`,`,,`---

© ISO/IEC 2000 – All rights reserved

Copyright International Organization for Standardization
Provided by IHS under license with ISO
No reproduction or networking permitted without license from IHS
Not for Resale

# Annex D

(informative)

## Example figure for Bearer Conditioning of $U_Q$-channels

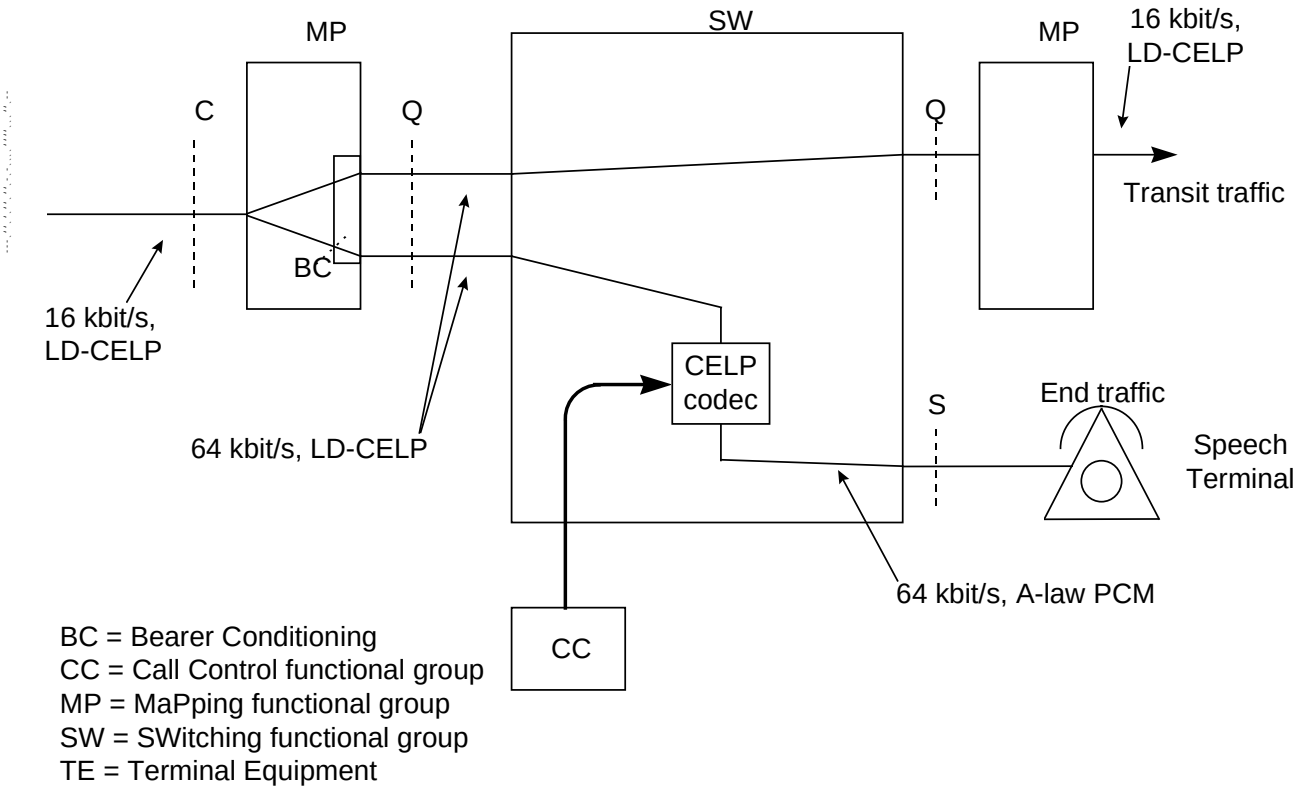


**Figure D.1 - Example for the arrangement of bearer conditioning and speech compression / decompression**

In this example the functionalities "analogue / digital convertor", "compression / decompression" and "multiplexing" are realized in the box entitled "codec" and are controlled by the Call Control (CC). There are other possibilities to implement them in which the Call Control is not involved.


© ISO/IEC 2000 – All rights reserved
Copyright International Organization for Standardization
Provided by IHS under license with ISO
No reproduction or networking permitted without license from IHS
Not for Resale

**ICS 33.040.35**

Price based on 10 pages

© ISO/IEC 2000 – All rights reserved

Copyright International Organization for Standardization
Provided by IHS under license with ISO
No reproduction or networking permitted without license from IHS

Not for Resale