INTERNATIONAL STANDARD

ISO/IEC 16969

First edition
1999-10-01

Information technology — Data interchange on 120 mm optical disk cartridges using +RW format — Capacity: 3,0 Gbytes and 6,0 Gbytes

Technologies de l'information — Échange de données sur cartouches de disque optique de 120 mm utilisant le format +RW — Capacité: 3,0 Gbytes et 6,0 Gbytes

Reference number
ISO/IEC 16969:1999(E)

© ISO 1999

Copyright International Organization for Standardization
Provided by IHS under license with ISO
No reproduction or networking permitted without license from IHS

Not for Resale

PDF disclaimer

This PDF file may contain embedded typefaces. In accordance with Adobe's licensing policy, this file may be printed or viewed but shall not be edited unless the typefaces which are embedded are licensed to and installed on the computer performing the editing. In downloading this file, parties accept therein the responsibility of not infringing Adobe's licensing policy. The ISO Central Secretariat accepts no liability in this area.

Adobe is a trademark of Adobe Systems Incorporated.

Details of the software products used to create this PDF file can be found in the General Info relative to the file; the PDF-creation parameters were optimized for printing. Every care has been taken to ensure that the file is suitable for use by ISO member bodies. In the unlikely event that a problem relating to it is found, please inform the Central Secretariat at the address given below.

© ISO/IEC 1999

All rights reserved. Unless otherwise specified, no part of this publication may be reproduced or utilized in any form or by any means, electronic or mechanical, including photocopying and microfilm, without permission in writing from either ISO at the address below or ISO's member body in the country of the requester.

ISO copyright office
Case postale 56 • CH-1211 Geneva 20
Tel. + 41 22 749 01 11
Fax + 41 22 734 10 79
E-mail copyright@iso.ch
Web www.iso.ch

Printed in Switzerland

© ISO/IEC 1999 – All rights reserved

Copyright International Organization for Standardization
Provided by IHS under license with ISO
No reproduction or networking permitted without license from IHS

Not for Resale

Contents

Page

Foreword viii

1. Scope 1

2. Conformance 1
2.1. Optical Disk 1
2.2. Generating system 1
2.3. Receiving system 1
2.4. Compatibility statement 1

3. Normative reference 1

4. Definitions 2

5. Conventions and notations 3
5.1. Representation of numbers 3
5.2. Names 3

6. List of acronyms 4

7. General description of the optical disk 4

8. General Requirements 5
8.1. Environments 5
8.1.1. Test environment 5
8.1.2. Operating environment 5
8.1.3. Storage environment 6
8.1.4. Transportation 6
8.2. Safety requirements 6
8.3. Flammability 6

9. Reference Drive 6
9.1. Optical system 6
9.2. Optical beam 7
9.3. Read channel 1 7
9.4. Disk clamping 8
9.5. Rotation of the disk 8
9.6. Tracking channel (Read channel 2) 8
9.6.1. Normalized servo transfer function 8
9.6.2. Reference Servo for Axial Tracking 9
9.6.3. Reference Servo for Radial Tracking 10

10. Dimensional characteristics 11
10.1. Reference Planes 11
10.2. Overall dimensions 11
10.3. First transition area 12
10.4. Second transition area 12
10.5. Clamping Zone 12
10.6. Third transition area 12
10.7. Information Zone 13
10.8. Rim area 13
10.9. Remark on tolerances 13

11. Mechanical characteristics 14
11.1. Mass 14

© ISO/IEC 1999 – All rights reserved

Copyright International Organization for Standardization
Provided by IHS under license with ISO
No reproduction or networking permitted without license from IHS
Not for Resale

11.2. Moment of inertia 14
11.3. Dynamic imbalance 14
11.4. Axial runout 15
11.5. Radial runout 15

12. Optical characteristics 15
12.1. Index of refraction 15
12.2. Thickness of the substrate 15
12.3. Reflectivity 16
12.4. Birefringence 16
12.5. Angular deviation 16

13. Data format 17
13.1. Data Frames 17
13.1.1. Identification Data (ID) 18
13.1.2. ID Error Detection Code (IED) 19
13.1.3. RSV 19
13.1.4. Error Detection Code (EDC) 19
13.2. Scrambled Frames 19
13.3. ECC Blocks 20
13.4. Recording Frames 22
13.5. Modulation and NRZI conversion 22
13.6. Physical Sectors 23
13.7. Layout of a Recording Unit Block (RUB) 24
13.7.1. Sync Frames used for linking 24
13.7.2. Start Position Shift (SPS) 25
13.7.3. Recording Unit Block position 25
13.8. d.c. component suppression control 26

14. Track format 26
14.1. Track shape 26
14.2. Track path 27
14.3. Track pitch 27
14.4. Track number 27
14.5. Track layout 27
14.5.1. Segment layout 28
14.5.2. AFCMs 29

15. General description of the Information Zone 31

16. Layout of the Information Zone 31
16.1. Physical Sector Numbers (PSNs) 32

17. Lead-in Zone 33
17.1. Initial Zone 34
17.2. Reference Code Zone 34
17.3. Buffer Zone 1 34
17.4. Control Data Zone 35
17.4.1. Physical format information 35
17.4.2. Disk manufacturing information 39
17.4.3. Content provider information 39
17.5. Buffer Zone 2 39
17.6. Connection Zone 39
17.7. Guard Zone 1 40
17.8. Inner Disk Test Zone 40
17.9. Inner Drive Test Zone 40
17.10. Guard Zone 2 40
17.11. DMA Zone 1 40
17.12. Inner Disk Identification Zone 40
17.13. DMA Zone 2 40

18. Data Zone 40

© ISO/IEC 1999 – All rights reserved
Copyright International Organization for Standardization
Provided by IHS under license with ISO
No reproduction or networking permitted without license from IHS
Not for Resale

19. Lead-out Zone 40
19.1. DMA Zone 3 41
19.2. Outer Disk Identification Zone 41
19.3. DMA Zone 4 41
19.4. Guard Zone 3 41
19.5. Outer Drive Test Zone 41
19.6. Outer Disk Test Zone 41
19.7. Guard Zone 4 41

20. The use of the Defect Management Areas 41
20.1. Defect Management Areas 42
20.2. Primary Defect List (PDL) 42
20.3. Secondary Defect List (SDL) 43
20.4. Assignment of Logical Sector Numbers (LSNs) 45
20.5. Slipping and Linear Replacement algorithms and requirements 45

21. Disk Control ECC Blocks (DCBs) 45
21.1. Format of Disk Control ECC Blocks 45

22. General 47

23. Method of testing 47
23.1. Environment 47
23.2. Reference Drive 47
23.2.1. Optics and mechanics 47
23.2.2. Read power 47
23.2.3. Read channels 47
23.2.4. Tracking 47
23.3. Definition of signals 47

24. Characteristics of the groove signals 48
24.1. Push-pull signal 48
24.2. Track Cross signal 48
24.3. Phase depth 48
24.4. Normalized wobble signal 49
24.5. Characteristics of the wobble 49
24.6. Characteristics of the Alternating Fine Clock Marks (AFCM) 49

25. Method of testing 49
25.1. Environment 49
25.2. Reference Drive 49
25.2.1. Optics and mechanics 49
25.2.2. Read power 49
25.2.3. Read channels 49
25.2.4. Tracking 50
25.2.5. Scanning velocity 50
25.3. Write conditions for Rewritable area 50
25.3.1. Write pulse waveform 50
25.3.2. Write power 50
25.3.3. Measurement conditions 50
25.4. Jitter 50
25.5. Channel bit length 51
25.6. Phase depth 51
25.7. Definition of signals 51
25.7.1. High frequency signals (HF) 51
25.7.2. Modulated amplitude 51
25.7.3. Reflectivity-modulation product 51
25.7.4. Signal asymmetry 52
25.7.5. Push-pull signal 52
25.7.6. Track Cross signal 52
25.7.7. Differential phase tracking error signal 52

© ISO/IEC 1999 – All rights reserved

Copyright International Organization for Standardization
Provided by IHS under license with ISO
No reproduction or networking permitted without license from IHS
Not for Resale

26. Method of testing 53
26.1. Environment 53
26.2. Reference Drive 54
26.2.1. Optics and mechanics 54
26.2.2. Read power 54
26.2.3. Read channels 54
26.2.4. Error correction 54
26.2.5. Tracking 54
27. Minimum quality of a Recording Unit Block 54
27.1. User-written data 54
27.2. Embossed data 54
28. Data interchange requirements 54
28.1. Tracking 54
28.2. User-written data 54
28.3. Quality of disk 55
Annex A 56
(normative) 56
Measurement of light reflectivity 56
A.1 Calibration method 56
A.2 Measuring method 57
Annex B 58
(normative) 58
Measurement of birefringence 58
B.1 Principle of the measurement 58
B.2 Measurements conditions 59
B.3 Example of a measurement set-up 59
Annex C 57
(normative) 60
Measuring conditions for operation signal 60
C.1 System diagram for jitter measurement and determination of the characteristics of user data 60
C.2 Open loop transfer function for PLL 61
C.3 Slicer 61
C.4 Conditions for measurement 61
C.5 Measurement 62
Annex D 63
(normative) 63
Measurement of the differential phase tracking error 63
D.1 Measuring method for the differential phase tracking error 63
D.2 Measurement of $\overline{\Delta t}$/T without time interval analyzer 63

© ISO/IEC 1999 – All rights reserved
Copyright International Organization for Standardization
Provided by IHS under license with ISO
No reproduction or networking permitted without license from IHS
Not for Resale

Annex E 65
(normative) 65
The write pulse wave form for testing 65
Annex F 67
(normative) 67
8-to-16 Modulation 67
Annex G 75
(normative) 75
Optimum Power Control 75
G.1 Optimum recording power 75
G.2 OPC procedure for media testing 76
Annex H 77
(normative) 77
Logical to Physical address translation 77
Annex J 79
(normative) 79
Recording Unit Block positioning 79
J.1 Variations in start position 79
J.2 Example calculation 79
Annex K 80
(informative) 80
Transportation 80
K.1 General 80
K.2 Packaging 80
K.2.1 Temperature and humidity 80
K.2.2 Impact loads and vibrations 80
Annex L 81
(informative) 81
Measurement of the groove wobble amplitude 81
L.1 Relation between normalized wobble signal and wobble amplitude 81
L.2 Tolerances of the normalized wobble signal and the AFCM signal 81
Annex M 83
(informative) 83
ADIP Encoding Process 83
Annex N 84
(informative) 84
Values to be Implemented in Existing and Future Specifications 84

© ISO/IEC 1999 – All rights reserved

Copyright International Organization for Standardization
Provided by IHS under license with ISO
No reproduction or networking permitted without license from IHS
Not for Resale

Foreword

ISO (the International Organization for Standardization) and IEC (the International Electrotechnical Commission) form the specialized system for worldwide standardization. National bodies that are members of ISO or IEC participate in the development of International Standards through technical committees established by the respective organization to deal with particular fields of technical activity. ISO and IEC technical committees collaborate in fields of mutual interest. Other international organizations, governmental and non-governmental, in liaison with ISO and IEC, also take part in the work.

International Standards are drafted in accordance with the rules given in the ISO/IEC Directives, Part 3.

In the field of information technology, ISO and IEC have established a joint technical committee, ISO/IEC JTC 1. Draft International Standards adopted by the joint technical committee are circulated to national bodies for voting. Publication as an International Standard requires approval by at least 75 % of the national bodies casting a vote.

This International Standard was prepared by ECMA (as ECMA-274) and was adopted, under a special “fast-track procedure”, by Joint Technical Committee ISO/IEC JTC 1, *Information technology*, in parallel with its approval by national bodies of ISO and IEC.

Annexes A to J form an integral part of this International Standard, annexes K to N are for information only.

© ISO/IEC 1999 – All rights reserved
Copyright International Organization for Standardization
Provided by IHS under license with ISO
No reproduction or networking permitted without license from IHS
Not for Resale

Information technology - Data interchange on 120 mm optical disk cartridges using +RW format - Capacity: 3,0 Gbytes and 6,0 Gbytes

Section 1 - General

1 Scope

This International Standard specifies the mechanical, physical and optical characteristics of 120 mm rewritable optical disks with capacities of 3,0 Gbytes and 6,0 Gbytes. It specifies the quality of the recorded and unrecorded signals, the format of the data and the recording method, thereby allowing for information interchange by means of such disks. The data can be written, read and overwritten many times using the phase change method. These disks are identified as +RW.

This International Standard specifies

- two related but different Types of this disk (see clause 7),
- the conditions for conformance,
- the environments in which the disk is to be tested, operated and stored,
- the mechanical, physical and dimensional characteristics of the disk, so as to provide mechanical interchange between data processing systems,
- the format of the information on the disk, including the physical disposition of the tracks and sectors, the error correcting codes and the coding method,
- the characteristics of the signals recorded on the disk, thus enabling data processing systems to read the data from the disk.

This International Standard provides for the interchange of disks between optical disk drives. Together with a standard for volume and file structure, it provides for full data interchange between data processing systems.

2 Conformance

2.1 Optical Disk

A claim of conformance with this International Standard shall specify the Type implemented. An optical disk shall be in conformance with this International Standard if it meets all mandatory requirements specified for its Type.

2.2 Generating system

A generating system shall be in conformance with this International Standard if the optical disk it generates is in accordance with 2.1.

2.3 Receiving system

A receiving system shall be in conformance with this International Standard if it is able to handle both Types of optical disk according to 2.1.

2.4 Compatibility statement

A claim of conformance by a Generating or Receiving system with this International Standard shall include a statement listing any other ECMA and International Standards supported. This statement shall specify the numbers of the standards, the optical disk types supported (where appropriate) and whether support includes reading only or both reading and writing.

3 Normative reference

The following standard contains provisions which, through reference in this text, constitutes provisions of this International Standard. At the time of publication, the edition indicated was valid. All standards are subject to revision, and parties to agreements based on this International Standard are encouraged to investigate the

--`,,```,,,,````-`-`,,`,,`,`,,`---

© ISO/IEC 1999 – All rights reserved

Copyright International Organization for Standardization
Provided by IHS under license with ISO
No reproduction or networking permitted without license from IHS
Not for Resale

possibility of applying the most recent edition of the standard indicated below. Members of IEC and ISO maintain registers of currently valid International Standards.

IEC 60950:1999, *Safety of information technology equipment*.

4 Definitions

For the purposes of this International Standard the following definitions apply.

4.1 Alternating Fine Clock Mark (AFCM): A single cycle deviation of the track from the average track centreline which is recorded periodically.

4.2 Channel bit: The elements by which the binary values ZERO and ONE are represented by marks and spaces on the disk.

4.3 Clamping Zone: The annular part of the disk within which the clamping force is applied by the clamping device.

4.4 Digital Sum Value (DSV): The arithmetic sum obtained from a bit stream by allocating the decimal value 1 to bits set to ONE and the decimal value -1 to bits set to ZERO.

4.5 Disk Reference Plane: A plane defined by the perfectly flat annular surface of an ideal spindle onto which the clamping Zone of the disk is clamped, and which is normal to the axis of rotation.

4.6 dummy substrate: A layer which may be transparent or not, provided for the mechanical support of the disk, and in some cases, of the recording layer as well.

4.7 entrance surface: The surface of the disk onto which the optical beam first impinges.

4.8 field: A subdivision of a sector.

4.9 interleaving: The process of reallocating the physical sequence of units of data so as to render the data more immune to burst errors.

© ISO/IEC 1999 – All rights reserved
Copyright International Organization for Standardization
Provided by IHS under license with ISO
No reproduction or networking permitted without license from IHS
Not for Resale

4.10 land and groove: A trench-like feature of the disk, applied before the recording of any information, and used to define the track location. The groove is located nearer to the entrance surface than the land. The recording is made in the groove.

4.11 mark: A feature of the recording layer which may take the form of an amorphous domain, a pit, or any other type or form that can be sensed by the optical system. The pattern of marks and spaces represents the data on the disk.

4.12 phase change: A physical effect by which the area of a recording layer irradiated by a laser beam is heated so as to change from an amorphous state to a crystalline state and vice versa.

4.13 Physical Sector: The smallest addressable part of a track in the Information Zone of a disk that can be accessed independently of other addressable parts of the Zone.

4.14 recording layer: A layer of the disk on which data is written during manufacture and / or use.

4.15 Reed-Solomon code (RS): An error detection and / or correction code.

4.16 segment number: Angular location information contained in wobble data.

4.17 space: A feature of the recording layer which may take the form of an crystalline, a non-pit, or any other type or form that can be sensed by the optical system. The pattern of marks and spaces represents the data on the disk.

4.18 substrate: A transparent layer of the disk, provided for mechanical support of the recording layer, through which the optical beam accesses the recording layer.

4.19 track: A 360° turn of a continuous spiral.

4.20 track number: Radial location information contained in the wobble data, designating the track count in the rewritable region of the disk.

4.21 track pitch: The distance between adjacent track centrelines, measured in a radial direction.

4.22 wobble: A continuous sinusoidal deviation of the track from the average centreline. Location information is included as frequency modulated data in the wobble.

4.23 zone: An annular area of the disk.

5 Conventions and notations

5.1 Representation of numbers

A measured value is rounded off to the least significant digit of the corresponding specified value. For instance, it implies that a specified value of 1,26 with a positive tolerance of + 0,01 and a negative tolerance of - 0,02 allows a range of measured values from 1,235 to 1,275.

Numbers in decimal notations are represented by the digits 0 to 9.

Numbers in hexadecimal notation are represented by the hexadecimal digits 0 to 9 and A to F in parentheses.

The setting of bits is denoted by ZERO and ONE.

Numbers in binary notations and bit patterns are represented by strings of digits 0 and 1, with the most significant bit shown to the left. In a pattern of n bits, bit b_{n-1} shall be the most significant bit (msb) and bit b_0 shall be the least significant bit (lsb). Bit b_{n-1} shall be recorded first.

Negative values of numbers in binary notation are given as Two's complement.

In each data field, the data is recorded so that the most significant byte (MSB), identified as Byte 0, shall be recorded first and the least significant byte (LSB) last.

In a field of $8n$ bits, bit $b_{(8n-1)}$ shall be the most significant bit (msb) and bit b_0 the least significant bit (lsb). Bit $b_{(8n-1)}$ shall be recorded first.

5.2 Names

The names of entities, e.g. specific tracks, fields, etc., are given with an initial capital.

© ISO/IEC 1999 – All rights reserved

Copyright International Organization for Standardization
Provided by IHS under license with ISO
No reproduction or networking permitted without license from IHS
Not for Resale

6 List of acronyms

ADIP	Address in Pre-groove	LSB	Least Significant Byte
AFCM	Alternating Fine Clock Mark	msb	Most Significant Bit
BP	Byte Position	MSB	Most Significant Byte
BPF	Band Pass Filter	NRZ	Non Return to Zero
CAV	Constant Angular Velocity	NRZI	Non Return to Zero Inverted
CLV	Constant Linear Velocity	OPC	Optimum Power Control
DCB	Disk Control ECC Block	PBS	Polarizing Beam Splitter
DCC	d.c. component suppression Control	PDL	Primary Defect List
DMA	Defect Management Area	PI	Parity of Inner-code
DSV	Digital Sum Value	PLL	Phase Locked Loop
ECC	Error Correction Code	PSN	Physical Sector Number
EDC	Error Detection Code	PO	Parity of Outer-code
FM	Frequency Modulation	RS	Reed-Solomon code
HF	High Frequency	RUB	Recording Unit Block
ID	Identification Data	SDL	Secondary Defect List
IED	ID Error Detection code	SI	Spare Interval
LPF	Low Pass filter	SL	Spare Length
LSN	Logical Sector Number	SPS	Start Position Shift
lsb	Least Significant Bit	SYNC	Synchronization code

7 General description of the optical disk

The optical disk that is the subject of this International Standard consists of two substrates bonded together by an adhesive layer, so that the recording layer(s) is (are) on the inside. The centring of the disk is performed on the edge of the centre hole of the assembled disk on the side currently accessed. Clamping is performed in the Clamping Zone. This International Standard provides for two Types of such disks.

Type S consists of a substrate, a single recording layer and a dummy substrate. The recording layer can be accessed from one side only. The nominal capacity is 3,0 Gbytes.

Type D consists of two substrates and two recording layers. From each side of the disk only one of the recording layers can be accessed. The nominal capacity is 6,0 Gbytes.

Data can be written onto the disk as marks in the form of amorphous spots in the crystalline recording layer and can be overwritten with a focused optical beam, using the phase change effect between amorphous and crystalline states. The data can be read with a focused optical beam, using the phase change effect as the difference in the reflectivity between amorphous and crystalline states. The beam accesses the recording layer through a transparent substrate of the disk.

© ISO/IEC 1999 – All rights reserved
Copyright International Organization for Standardization
Provided by IHS under license with ISO
No reproduction or networking permitted without license from IHS
Not for Resale

The disk is specified with two different velocity ranges, CAV and CLV with one velocity range being a subset of the other. Each disk shall be recordable over the entire range of velocities specified for that disk.

Part of the disk contains read-only data for the drive in the form of pits embossed by the manufacturer. This data can be read using the diffraction of the optical beam by the embossed pits.

Figure 1 shows schematically the two Types.

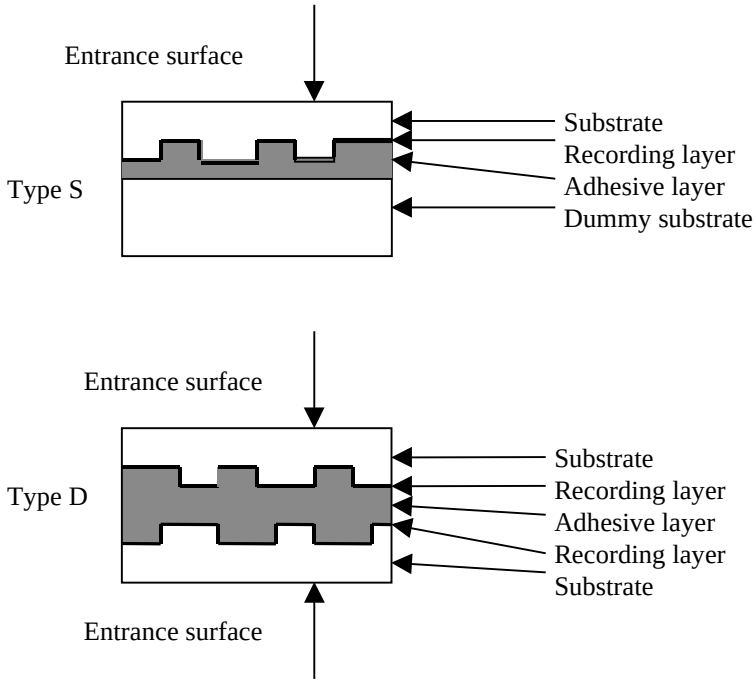

Figure 1 - Types of 120 mm +RW disks

8 General Requirements

8.1 Environments

8.1.1 Test environment

In the test environment, the air immediately surrounding the disk shall have the following properties:

Temperature	: 23 °C ± 2 °C
Relative humidity	: 45 % to 55 %
Atmospheric pressure	: 60 kPa to 106 kPa

No condensation on the optical disk shall occur. Before testing, the optical disk shall be conditioned in this environment for 48 h minimum. It is recommended that, before testing, the entrance surface of the optical disk shall be cleaned according to the instructions of the manufacturer of the disk.

Unless otherwise stated, all tests and measurements shall be made in this test environment.

8.1.2 Operating environment

This International Standard requires that a disk which meets all requirements of this International Standard in the specified test environment shall provide data interchange over the specified ranges of environmental parameters in the operating environment.

The operating environment is the environment where the air immediately surrounding the disk has the following properties:

temperature	: 5 °C to 55 °C
relative humidity	: 3 % to 85 %
absolute humidity	: 1 g/m^3 to 30 g/m^3
atmospheric pressure	: 60 kPa to 106 kPa
temperature gradient	: 10 °C/h max.
relative humidity gradient	: 10 %/h max.

© ISO/IEC 1999 – All rights reserved

Copyright International Organization for Standardization
Provided by IHS under license with ISO
No reproduction or networking permitted without license from IHS
Not for Resale

No condensation on the optical disk shall occur. If an optical disk has been exposed to conditions outside those specified in this clause, it shall be acclimatized in an allowed operating environment for at least 2 h before use.

8.1.3 Storage environment

The storage environment is defined as an environment where the air immediately surrounding the disk shall have the following properties:

temperature	: -10 °C to 55 °C
relative humidity	: 3 % to 90 %
absolute humidity	: 1 g/m^3 to 30 g/m^3
atmospheric pressure	: 60 kPa to 106 kPa
temperature gradient	: 15 °C/h max.
relative humidity gradient	: 10 %/h max.

No condensation on the optical disk shall occur.

8.1.4 Transportation

This International Standard does not specify requirements for transportation; guidance is given in annex K.

8.2 Safety requirements

The disk shall satisfy the safety requirements of Standard IEC 60950, when used in the intended manner or in any foreseeable use in an information processing system.

8.3 Flammability

The disk and its components shall be made from materials that comply with the flammability class for HB materials, or better, as specified in Standard IEC 60950.

9 Reference Drive

The Reference Drive shall be used for the measurement of optical parameters for conformance with the requirements of this International Standard. The critical components of this device have the characteristics specified in this clause.

9.1 Optical system

The basic set-up of the optical system of the Reference Drive used for measuring the (over)write and read parameters is shown in figure 2. Different components and locations of components are permitted, provided that the performance remains the same as that of the set-up in figure 2. The optical system shall be such that the detected light reflected from the entrance surface of the disk is minimized so as not to influence the accuracy of the measurements.

© ISO/IEC 1999 – All rights reserved
Copyright International Organization for Standardization
Provided by IHS under license with ISO
No reproduction or networking permitted without license from IHS
Not for Resale

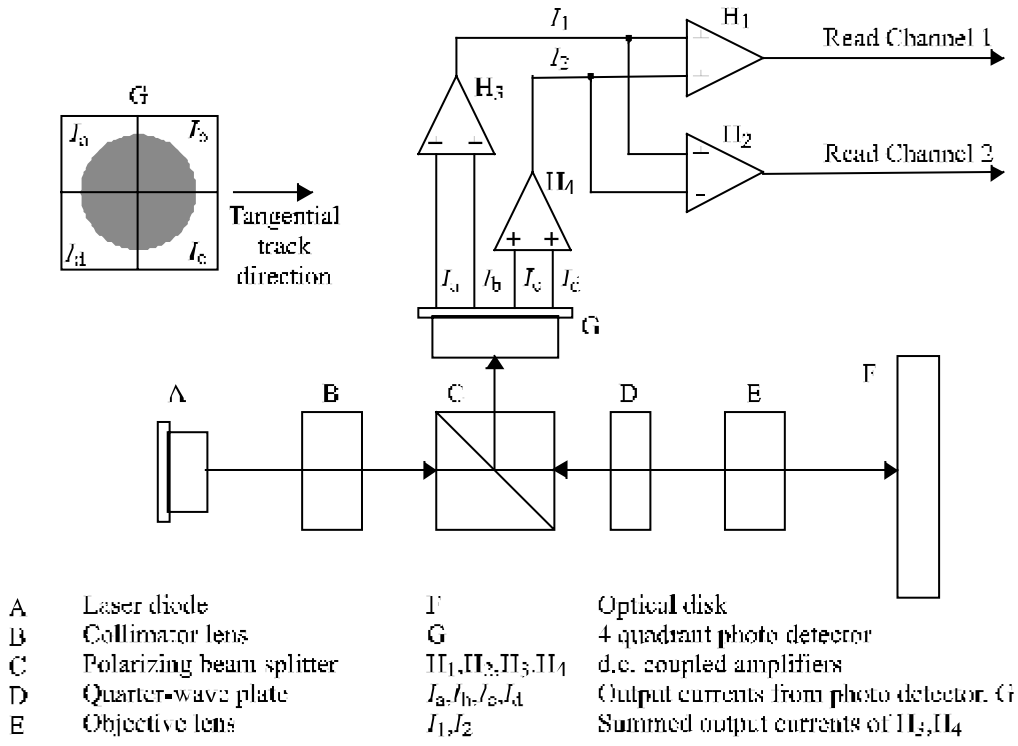

A	Laser diode	F	Optical disk
B	Collimator lens	G	4 quadrant photo detector
C	Polarizing beam splitter	H_1,H_2,H_3,H_4	d.c. coupled amplifiers
D	Quarter-wave plate	I_a,I_b,I_c,I_d	Output currents from photo detector G
E	Objective lens	I_1,I_2	Summed output currents of H_3,H_4

Figure 2- Optical system of the Reference Drive

The combination of polarizing beam splitter C and a quarter-wave plate D shall separate the entrance optical beam from a laser diode A and the reflected optical beam from an optical disk F. The beam splitter C shall have a p-s intensity reflectance ratio of at least 100.

9.2 Optical beam

The focused optical beam used for writing and reading data shall have the following properties:

a) Wavelength (λ) $650\,\text{nm}^{+10\,\text{nm}}_{-5\,\text{nm}}$

b) Numerical aperture of the objective lens (NA) 0,60 ± 0,01

c) The objective lens shall be compensated for spherical aberrations caused by a parallel substrate with nominal thickness (0,6 mm) and nominal refractive index (1,55).

d) Wave front aberration 0,033 × λ rms max.

e) Light intensity at the rim of the pupil of the the 30 % to 50 % of the maximum intensity objective lens in radial direction and 40 % to 60 % in the tangential direction.

f) Polarization Circularly polarized light

g) Read power 1,0 mW ± 0,1 mW

h) Write power and pulse width see annex E

i) Relative Intensity Noise (RIN)* of laser diode -134 dB/Hz max.

*RIN (dB/Hz) = 10 log [(a.c. light power density / Hz) / d.c. light power]

9.3 Read channel 1

Read channel 1 shall be provided to generate signals from the marks and spaces in the recording layer. This Read channel shall be used for reading the embossed information, using the diffraction of the optical beam by the marks, and be used for reading the user-written information, using the change in reflectivity of the marks and spaces due to the phase change effect. The read amplifiers after the photo detectors in the Read channel shall have a flat response within 1 dB from d.c. to 20 MHz.

© ISO/IEC 1999 – All rights reserved

Copyright International Organization for Standardization
Provided by IHS under license with ISO
No reproduction or networking permitted without license from IHS
Not for Resale

For measurement of jitter, the characteristics of the PLL and the slicer, etc. are specified in annex C.

9.4 Disk clamping

For measuring, the disk shall be clamped between two concentric rings covering most of the Clamping Zone (see 10.5). The top clamping area shall have the same diameters as the bottom clamping area (figure 3). Clamping shall occur between

$$d_{\text{in}} = 22{,}3\,\text{mm}^{+0{,}5\,\text{mm}}_{-0{,}0\,\text{mm}}$$

and

$$d_{\text{out}} = 32{,}7\,\text{mm}^{+0{,}0\,\text{mm}}_{-0{,}5\,\text{mm}}$$

The total clamping force shall be F_1 = 2,0 N ± 0,5 N. In order to prevent warping of the disk under the moment of force generated by the clamping force and the chucking force F_2 exerted on the rim of the centre hole of the disk, F_2 shall not exceed 0,5 N (see figure 3).

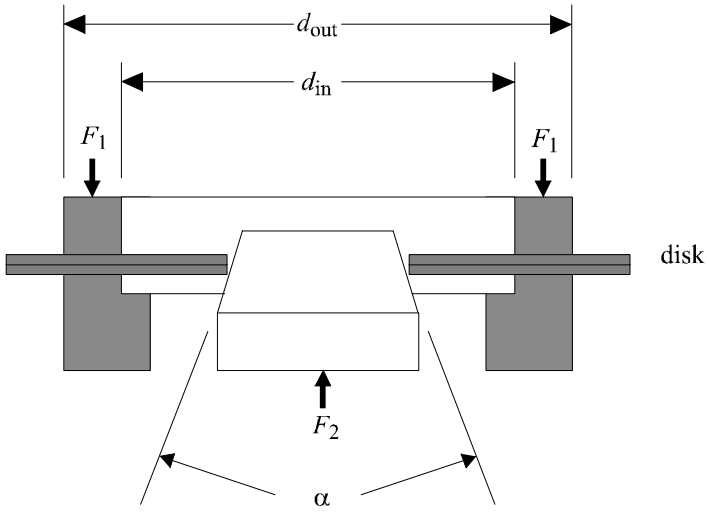

Figure 3 - Clamping and chucking conditions

The tapered cone angle, α, shall be 40,0° ± 0,5°.

9.5 Rotation of the disk

The actual rotation speed for reading the disk shall be such that it results in the reference velocity of 4,90 m/s ± 0,22 m/s at the nominal Channel bit rate of 27,791 016 Mbit/s. The direction of rotation shall be counter-clockwise when viewed from the objective lens.

The actual rotation speed for writing the disk shall be such that it includes the minimum and maximum velocities specified for the disk (see 17.4.1).

9.6 Tracking channel (Read channel 2)

Read channel 2 of the drive provides the tracking error signals to control the servos for radial tracking of the optical beam. The method of generating the axial tracking error is not specified for the Reference Drive. The radial tracking error is generated in Read Channel 2 as a signal (I_1 - I_2) related to the difference in the amount of light in the two halves of the exit pupil of the objective lens.

9.6.1 Normalized servo transfer function

The open-loop transfer function, $H_s(i\omega)$ for the axial and radial tracking servos is given by equation (1),

© ISO/IEC 1999 – All rights reserved
Copyright International Organization for Standardization
Provided by IHS under license with ISO
No reproduction or networking permitted without license from IHS
Not for Resale

$$H_s(i\omega) = H_s(i\omega) = \frac{1}{3} \times \left(\frac{\omega_0}{i\omega}\right)^2 \times \frac{1+\frac{3i\omega}{\omega_0}}{1+\frac{i\omega}{3\omega_0}} \quad (1)$$

where

$$i = \sqrt{-1}$$

$$\omega = 2\pi f$$

$$\omega_0 = 2\pi f_0$$

and f_0 is the 0 dB crossover frequency of the open-loop transfer function.
The crossover frequencies of the lead-lag network of the servo are

lead break frequency: $f_1 = f_0 / 3$

lag break frequency: $f_2 = f_0 \times 3$

9.6.2 Reference Servo for Axial Tracking

The crossover frequency of the normalized servo transfer function (H_s) for axial tracking, $f_0 = \omega_0 / (2\pi)$ shall be given by equation (2), where α_{max} shall be 1,5 times as large as the maximum expected axial acceleration of 8,0 m/s^2. The resulting tracking error e_{max} from this α_{max} shall be 0,23 μm.

Thus the crossover frequency f_0 shall be given by

$$f_0 = \frac{1}{2\pi}\sqrt{\frac{3\alpha_{max}}{e_{max}}} = \frac{1}{2\pi}\sqrt{\frac{3\times 8\times 1{,}5}{0{,}23\times 10^{-6}}} = 2{,}0 \text{ kHz} \quad (2)$$

For an open loop transfer function H of the Reference Servo for axial tracking, $|1+H|$ is limited as schematically shown by the shaded region of figure 4.

Bandwidth from 100 Hz to 10 kHz

$|1+H|$ shall be within 20% of $|1+H_s|$.

Bandwidth from 23 Hz to 100 Hz

$|1+H|$ shall be within the limits enclosed by the following four points.

1) 40,7 dB at 100 Hz ($|1+H_s|$ at 100 Hz - 20%)
2) 44,2 dB at 100 Hz ($|1+H_s|$ at 100 Hz + 20%)
3) 66,2 dB at 23 Hz ($|1+H_s|$ at 23 Hz - 20%)
4) 86,2 dB at 23Hz ($|1+H_s|$ at 23 Hz - 20% + 20 dB)

Bandwidth from 13,3 Hz to 23 Hz

$|1+H|$ shall be between 66,2 dB and 86,2 dB.

© ISO/IEC 1999 – All rights reserved

Copyright International Organization for Standardization
Provided by IHS under license with ISO
No reproduction or networking permitted without license from IHS
Not for Resale

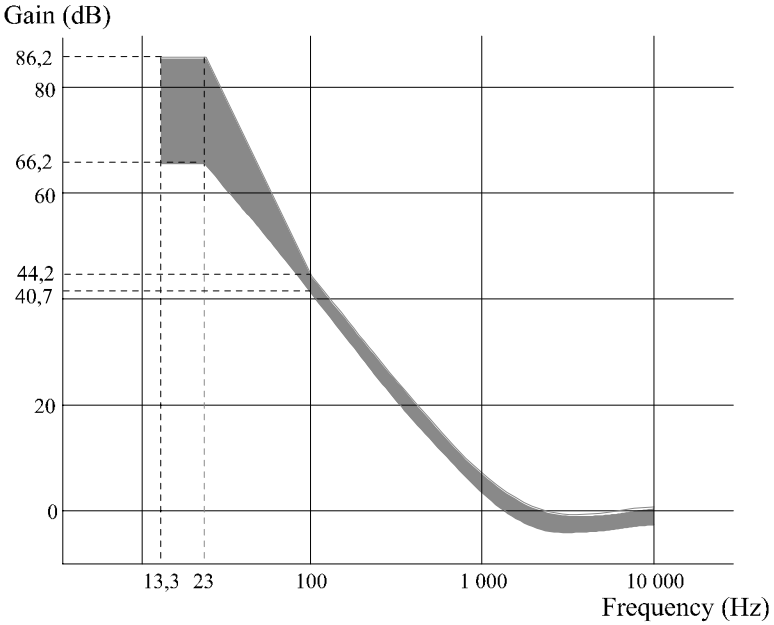

Figure 4 - Reference servo for axial tracking

9.6.3 Reference Servo for Radial Tracking

The crossover frequency of the normalized servo transfer function (H_s) for radial tracking $f_0 = \omega_0 / (2\pi)$ shall be given by equation (3), where α_{max} shall be 1,5 times as large as the expected radial acceleration of 1,7 m/s^2. The resulting tracking error e_{max} from this α_{max} shall be 0,033 μm.

Thus the crossover frequency f_0 shall be given by

$$f_0 = \frac{1}{2\pi}\sqrt{\frac{3\alpha_{max}}{e_{max}}} = \frac{1}{2\pi}\sqrt{\frac{3\times 1{,}7\times 1{,}5}{0{,}033\times 10^{-6}}} = 2{,}4\ \text{kHz} \qquad (3)$$

For an open loop transfer function H of the Reference Servo for radial tracking, $|1+H|$ is limited as schematically shown by the shaded region of figure 5.

Bandwidth from 100 Hz to 10 kHz

$|1+H|$ shall be within 20% of $|1+H_s|$.

Bandwidth from 31 Hz to 100 Hz

$|1+H|$ shall be within the limits enclosed by the following four points.

1) 43,9 dB at 100 Hz ($|1+H_s|$ at 100 Hz - 20%)

2) 47,4 dB at 100 Hz ($|1+H_s|$ at 100 Hz + 20%)

3) 64,2 dB at 31 Hz ($|1+H_s|$ at 31 Hz - 20%)

4) 84,2 dB at 31 Hz ($|1+H_s|$ at 31 Hz - 20% + 20 dB)

Bandwidth from 13,3 Hz to 31 Hz

$|1+H|$ shall be between 64,2 dB and 84,2 dB.

© ISO/IEC 1999 – All rights reserved
Copyright International Organization for Standardization
Provided by IHS under license with ISO
No reproduction or networking permitted without license from IHS
Not for Resale

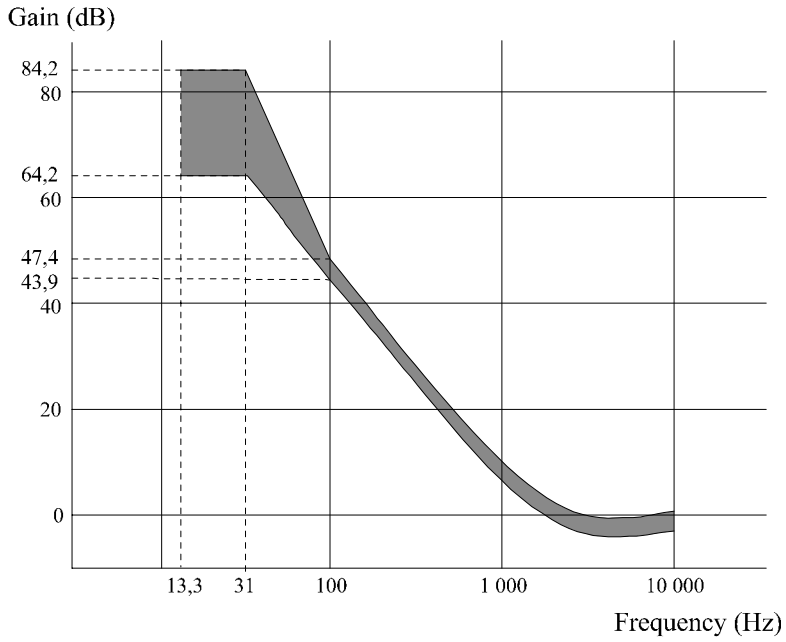

Figure 5 - Reference servo for radial tracking

Section 2 - Dimensional, mechanical and physical characteristics of the disk

10 Dimensional characteristics

Dimensional characteristics are specified for those parameters deemed mandatory for interchange and compatible use of the disk. Where there is freedom of design, only the functional characteristics of the elements described are indicated. The enclosed drawing, figure 7 shows the dimensional requirements in summarized form. The different parts of the disk are described from the centre hole to the outside rim.

10.1 Reference Planes

The dimensions are referred to two Reference Planes P and Q.

Reference Plane P is the primary Reference Plane. It is the plane on which the bottom surface of the Clamping Zone rests (see 10.5).

Reference Plane Q is the plane parallel to Reference Plane P at the height of the top surface of the Clamping Zone.

10.2 Overall dimensions

The disk shall have an overall diameter

d_1 = 120,00 mm ± 0,30 mm

The centre hole of a substrate or a dummy substrate shall have a diameter (see figure 6)

$$d_{\text{substrate}} = 15{,}00\,\text{mm}^{+0{,}15\,\text{mm}}_{-0{,}00\,\text{mm}}$$

The hole of an assembled disk, i.e. with both parts bonded together, shall have a diameter

d_2 = 15,00 mm min.

--`,,```,,,,````-`-`,,`,,`,`,,`---

© ISO/IEC 1999 – All rights reserved

Copyright International Organization for Standardization
Provided by IHS under license with ISO
No reproduction or networking permitted without license from IHS
Not for Resale

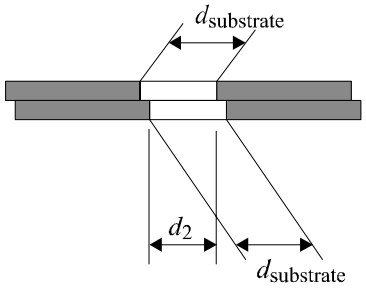

Figure 6 - Hole diameters for an assembled disk

The corners of the centre hole shall be free of any burrs or sharp features and shall be rounded off or chamfered by

h_5 = 0,1 mm max.

The thickness of the disk shall be

$$e_1 = 1{,}20\,\text{mm}^{+0{,}30\,\text{mm}}_{-0{,}06\,\text{mm}}$$

10.3 First transition area

In the area defined by d_2 and

d_3 = 16,0 mm min.

the surface of the disk is permitted to be above Reference Plane P and/or below Reference Plane Q by 0,10 mm max.

10.4 Second transition area

This area shall extend between diameter d_3 and diameter

d_4 = 22,0 mm max.

In this area the disk may have an uneven surface or burrs up to 0,05 mm max. beyond Reference Planes P and/or Q.

10.5 Clamping Zone

This Zone shall extend between diameter d_4 and diameter

d_5 = 33,0 mm min.

Each side of the Clamping Zone shall be flat within 0,1 mm. The top side of the Clamping Zone, i.e. that of Reference Plane Q shall be parallel to the bottom side, i.e. that of Reference Plane P within 0,1 mm.

In the Clamping Zone the thickness e_2 of the disk shall be

$$e_2 = 1{,}20\,\text{mm}^{+0{,}20\,\text{mm}}_{-0{,}10\,\text{mm}}$$

10.6 Third transition area

This area shall extend between diameter d_5 and diameter

d_6 = 44,0 mm max.

In this area the top surface is permitted to be above Reference Plane Q by

h_1 = 0,25 mm max.

or below Reference Plane Q by

h_2 = 0,10 mm max.

The bottom surface is permitted to be above Reference Plane P by

h_3 = 0,10 mm max.

or below Reference Plane P by

© ISO/IEC 1999 – All rights reserved
Copyright International Organization for Standardization
Provided by IHS under license with ISO
No reproduction or networking permitted without license from IHS
Not for Resale

h_4 = 0,25 mm max.

10.7 Information Zone

The Information Zone shall extend from diameter d_6 to diameter

d_7 = 117,5 mm max.

This Zone contains the embossed and Rewritable areas of the Lead-in Zone, the Data Zone, and the Lead-out Zone.

10.8 Rim area

The rim area is that area extending from diameter d_7 to diameter d_1. In this area the surfaces are permitted to both extend beyond Reference Plane Q or Reference Plane P

h_6 = 0,1 mm max.

The outer corners of the disk shall be free of any burrs or sharp features and shall be rounded off or chamfered by

h_7 = 0,2 mm max.

10.9 Remark on tolerances

All heights specified in the preceding clauses and indicated by h_i are independent from each other. This means that, for example, if the top surface of the third transition area is below Reference Plane Q by up to h_2, there is no implication that the bottom surface of this area has to be above Reference Plane P by up to h_3. Where dimensions have the same - generally maximum - numerical value, this does not imply that the actual values have to be identical.

© ISO/IEC 1999 – All rights reserved

Copyright International Organization for Standardization
Provided by IHS under license with ISO
No reproduction or networking permitted without license from IHS
Not for Resale

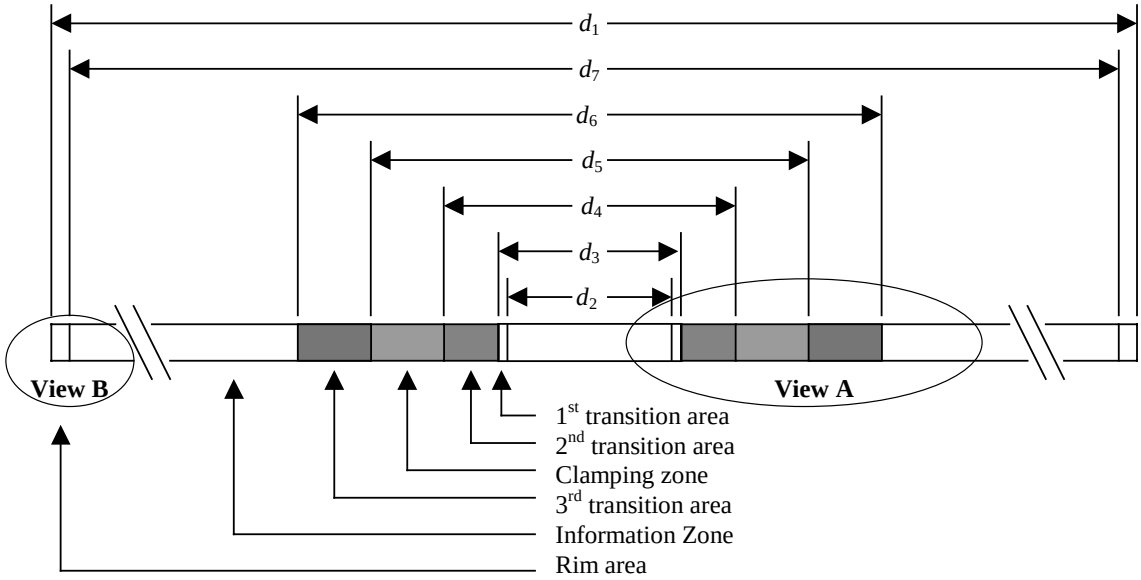

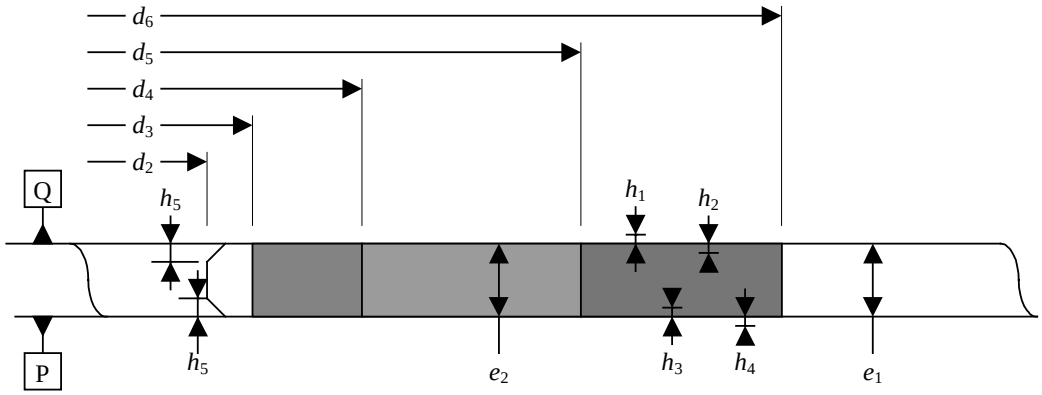

View A - Transition areas and Clamping zone

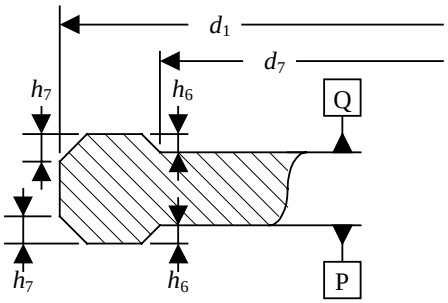

View B - Rim area

Figure 7 - Physical disk dimensions

11 Mechanical characteristics

11.1 Mass

The mass of the disk shall be in the range of 13,0 g to 20,0 g.

11.2 Moment of inertia

The moment of inertia of the disk, relative to its rotation axis, shall not exceed 0,040 g·m^2.

11.3 Dynamic imbalance

The dynamic imbalance of the disk, relative to its rotation axis, shall not exceed 0,010 g·m.

© ISO/IEC 1999 – All rights reserved
Copyright International Organization for Standardization
Provided by IHS under license with ISO
No reproduction or networking permitted without license from IHS
Not for Resale

11.4 Axial runout

When measured by the optical system with the Reference Servo for axial tracking, the disk rotating at the reference velocity, the deviation of the recording layer from its nominal position in the direction normal to the Reference Planes shall not exceed 0,3 mm.

The residual tracking error below 10 kHz, measured using the Reference Servo for axial tracking, shall not exceed 0,15 μm.

The measuring filter shall be a Butterworth LPF,

f_c (-3 dB): 10 kHz, with slope : -80 dB/decade.

11.5 Radial runout

The runout of the outer edge of the disk shall not exceed 0,3 mm peak-to-peak.

The radial runout of tracks shall not exceed 70 μm peak-to-peak.

The residual tracking error below 1,4 kHz, measured using the Reference Servo for radial tracking, shall not exceed 0,022 μm.

The measuring filter shall be a Butterworth LPF,

f_c (-3 dB) : 1,4 kHz, with slope : -80 dB/decade.

The rms noise value of the residual error signal in the frequency band from 1,4 kHz to 10 kHz, measured with an integration time of 20 ms, using the Reference Servo for radial tracking, shall not exceed 0,016 μm.

The measuring filter shall be a Butterworth BPF,

frequency range (-3 dB) : 1,4 kHz, with slope : +80 dB/decade

to : 10 kHz, with slope : -80 dB/decade

12 Optical characteristics

12.1 Index of refraction

The index of refraction of the substrate in the Information Zone shall be 1,55 ± 0,10.

12.2 Thickness of the substrate

The thickness of the substrate, from the entrance surface to the recording layer, varies with the index of refraction of the substrate and shall be defined as the enclosed region in figure 8.

© ISO/IEC 1999 – All rights reserved

Copyright International Organization for Standardization
Provided by IHS under license with ISO
No reproduction or networking permitted without license from IHS
Not for Resale

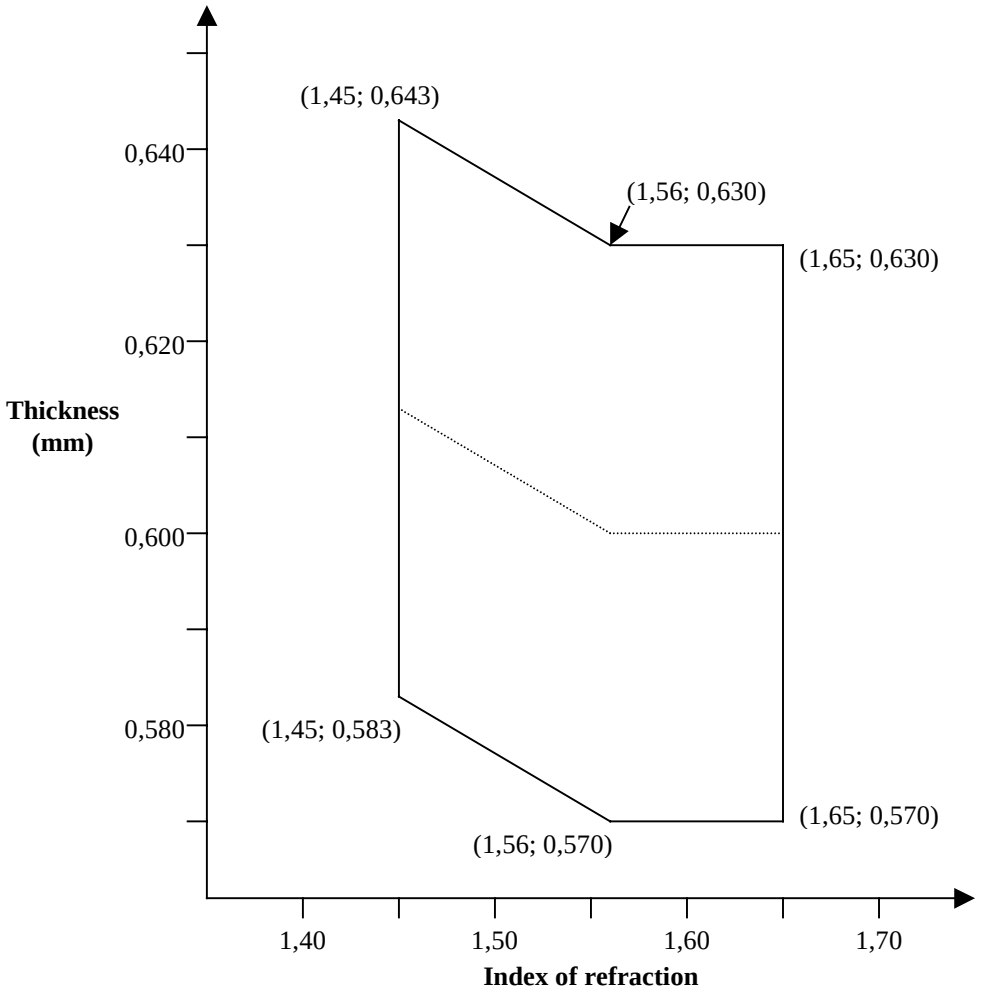

Figure 8 - Thickness of the substrate

12.3 Reflectivity

The double-pass optical transmission of the substrate and the reflectivity of the recording layer are measured together as the reflectivity R of the disk. When measured according to annex A the value of R shall be

in the Embossed areas $15\% \leq R_{14H} \leq 30\%$

in the Rewritable areas $10\% \leq R_d \leq 20\%$ in the unrecorded groove
$10\% \leq R_{14H} \leq 20\%$ in the recorded groove

12.4 Birefringence

The birefringence of the substrate shall not exceed 60 nm when measured according to annex B.

12.5 Angular deviation

The angular deviation is the angle α between a parallel incident beam perpendicular to the Reference Plane P and the reflected beam (see figure 9). The incident beam shall have a diameter in the range 0,3 mm to 3,0 mm. This angle α includes deflection due to the entrance surface and to the unparallelism of the reflective layer with the entrance surface.

© ISO/IEC 1999 – All rights reserved
Copyright International Organization for Standardization
Provided by IHS under license with ISO
No reproduction or networking permitted without license from IHS
Not for Resale

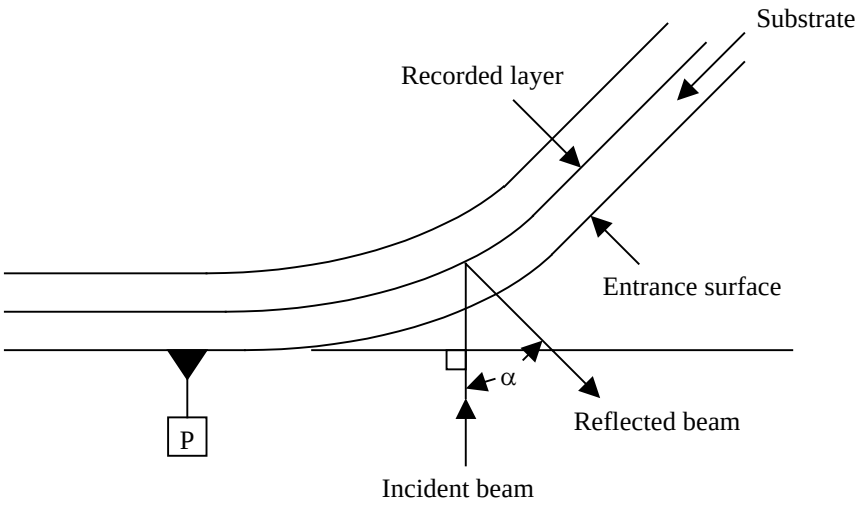

Figure 9 -Angular deviation α

The angular deviation shall be

In radial direction : α = 0,70° max.
In tangential direction : α = 0,30° max.

Section 3 - Format of information

13 Data format

The data received from the host, called Main Data, is formatted in a number of steps before being recorded on the disk.

It is transformed successively into

– a Data Frame,

– a Scrambled Frame,

– an ECC Block,

– 16 Recording Frames,

– 16 Physical Sectors

– a Recording Unit Block

These steps are specified in the following clauses.

13.1 Data Frames

A Data Frame shall consist of 2 064 bytes arranged in an array of 12 rows each containing 172 bytes (figure 10). The first row shall start with three fields, called Identification Data (ID), ID Error Detection Code (IED), and RSV bytes, followed by 160 Main Data bytes. The next 10 rows shall each contain 172 Main Data bytes, and the last row shall contain 168 Main Data bytes followed by four bytes for recording an Error Detection Code (EDC). The 2 048 Main Data bytes are identified as D_0 to $D_{2\,047}$.

© ISO/IEC 1999 – All rights reserved

Copyright International Organization for Standardization
Provided by IHS under license with ISO
No reproduction or networking permitted without license from IHS
Not for Resale

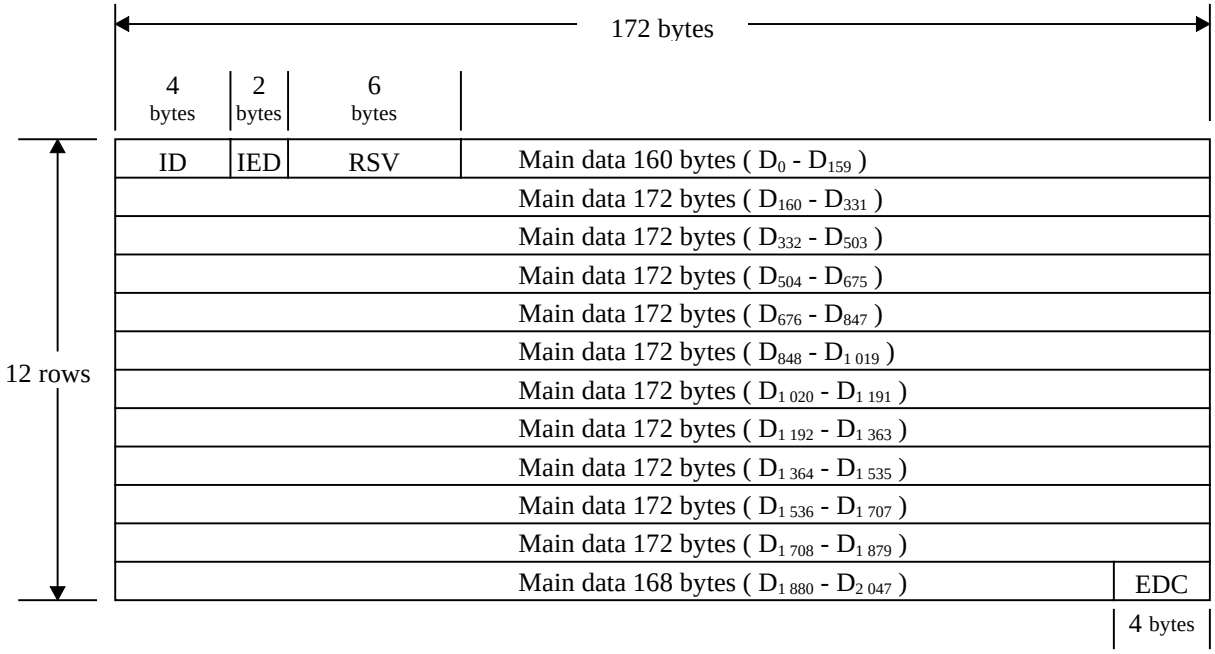

Figure 10 - Data Frame

13.1.1 Identification Data (ID)

This field shall consist of four bytes, the bits of which are numbered consecutively from b_0 (lsb) to b_{31} (msb), see figure 11.

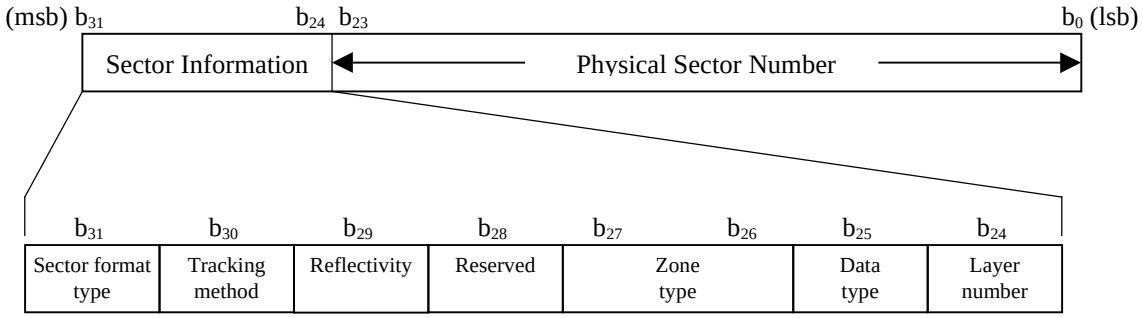

Figure 11 - Identification Data (ID)

The bits of the most significant byte, the Sector Information, shall be set as follows:

Bit b_{31} shall be set to ZERO, indicating CLV format

Bit b_{30} shall be set to

ZERO, in the Embossed area, indicating pit tracking (see clause 16)
ONE, in the Rewritable area, indicating groove tracking (see clause 16)

Bit b_{29} shall be set to ONE indicating that the reflectivity does not exceed 40 %

Bit b_{28} shall be set to ZERO

Bits b_{27} to b_{26} shall be set to

ZERO ZERO in the Data Zone
ZERO ONE in the Lead-in Zone
ONE ZERO in the Lead-out Zone

© ISO/IEC 1999 – All rights reserved
Copyright International Organization for Standardization
Provided by IHS under license with ISO
No reproduction or networking permitted without license from IHS
Not for Resale

Bit b_{25}	shall be set to ZERO, in the Embossed areas. ONE, in the Rewritable areas.
Bit b_{24} layer can	shall be set to ZERO, indicating that through an entrance surface only one recording be accessed

The least significant three bytes, bits b_{23} to b_0 , shall specify the Physical Sector Number in binary notation. The Physical Sector Number of the first Physical Sector of an ECC Block shall be an integer multiple of 16.

13.1.2 ID Error Detection Code (IED)

When identifying all bytes of the array shown in figure 10 as $C_{i,j}$ for i = 0 to 11 and j = 0 to171, the bytes of IED are represented by $C_{0,j}$ for j = 4 to 5. Their setting is obtained as follows.

$$IED(\mathrm{x}) = \sum_{\mathrm{j}=4}^{5} C_{0,\mathrm{j}} x^{5-j} = I(\mathrm{x})\mathrm{x}^2 \bmod G_E(\mathrm{x})$$

where

$$\mathrm{I}(x) = \sum_{j=0}^{3} \mathrm{C}_{0,j} x^{3-j}$$

$$\mathrm{G_E}(x) = (x + 1)(x + \alpha)$$

α is the primitive root of the primitive polynomial $\mathrm{P}(x) = x^8 + x^4 + x^3 + x^2 + 1$

13.1.3 RSV

This field shall consist of 6 bytes. These bytes shall all be set to (00).

13.1.4 Error Detection Code (EDC)

This 4-byte field shall contain an Error Detection Code computed over the preceding 2 060 bytes of the Data Frame. Considering the Data Frame as a single bit field starting with the most significant bit of the first byte of the ID field and ending with the least significant bit of the EDC field, then this msb will be $b_{16\,511}$ and the lsb will be b_0. Each bit b_i of the EDC is shown as follows for i = 0 to 31:

$$\mathrm{EDC}(x) = \sum_{i=31}^{0} \mathrm{b}_i x^i = \mathrm{I}(x) \bmod \mathrm{G}(x)$$

where

$$\mathrm{I}(x) = \sum_{i=32}^{16511} \mathrm{b}_i x^i$$

$$\mathrm{G}(x) = x^{32} + x^{31} + x^4 + 1$$

13.2 Scrambled Frames

The 2 048 Main Data bytes shall be scrambled by means of the circuit shown in figure 12 which shall consist of a feedback bit shift register in which bits r_7 (msb) to r_0 (lsb) represent a scrambling byte at each 8-bit shift. At the beginning of the scrambling procedure of a Data Frame, positions r_{14} to r_0 shall be pre-set to the value(s) specified in table 1. The same pre-set value shall be used for 16 consecutive Data Frames. After 16 groups of 16 Data Frames, the sequence is repeated. The initial pre-set number is equal to the value represented by bits b_7 (msb) to b_4 (lsb) of the ID field of the Data Frame. table 1 specifies the initial pre-set value of the shift register corresponding to the 16 initial pre-set numbers.

© ISO/IEC 1999 – All rights reserved

Copyright International Organization for Standardization
Provided by IHS under license with ISO
No reproduction or networking permitted without license from IHS
Not for Resale

Table 1 - Initial values of the shift register

Initial pre-set number	Initial pre-set value	Initial pre-set number	Initial pre-set value
(0)	(0001)	(8)	(0010)
(1)	(5500)	(9)	(5000)
(2)	(0002)	(A)	(0020)
(3)	(2A00)	(B)	(2001)
(4)	(0004)	(C)	(0040)
(5)	(5400)	(D)	(4002)
(6)	(0008)	(E)	(0080)
(7)	(2800)	(F)	(0005)

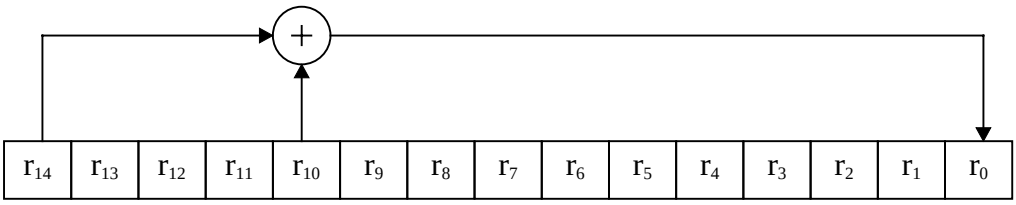

Figure 12 - Feedback shift register

The part of the initial value of r_7 to r_0 is taken out as scrambling byte S_0 . After that, an 8-bit shift is repeated 2 047 times and the following 2 047 bytes shall be taken from r_7 to r_0 as scrambling bytes S_1 to $S_{2\,047}$. The Main Data bytes D_k of the Data Frame become scrambled bytes D'_k where

$D'_k = D_k \oplus S_k$ for k = 0 to 2 047

$\oplus$ stands for Exclusive OR

13.3 ECC Blocks

An ECC Block is formed by arranging 16 consecutive Scrambled Frames in an array of 192 rows of 172 bytes each (figure 13). To each of the 172 columns 16 bytes of Parity of Outer Code are added, then, to each of the resulting 208 rows, 10 bytes of Parity of Inner Code are added. Thus a complete ECC Block comprises 208 rows of 182 bytes each. The bytes of this array are identified as $B_{i,j}$ as follows, where i is the row number and j is the column number.

$B_{i,j}$ for i = 0 to 191 and j = 0 to 171 are bytes from the Scrambled Frames

$B_{i,j}$ for i = 192 to 207 and j = 0 to 171 are bytes of the Parity of Outer Code

$B_{i,j}$ for i = 0 to 207 and j = 172 to 181 are bytes of the Parity of Inner Code

© ISO/IEC 1999 – All rights reserved
Copyright International Organization for Standardization
Provided by IHS under license with ISO
No reproduction or networking permitted without license from IHS
Not for Resale

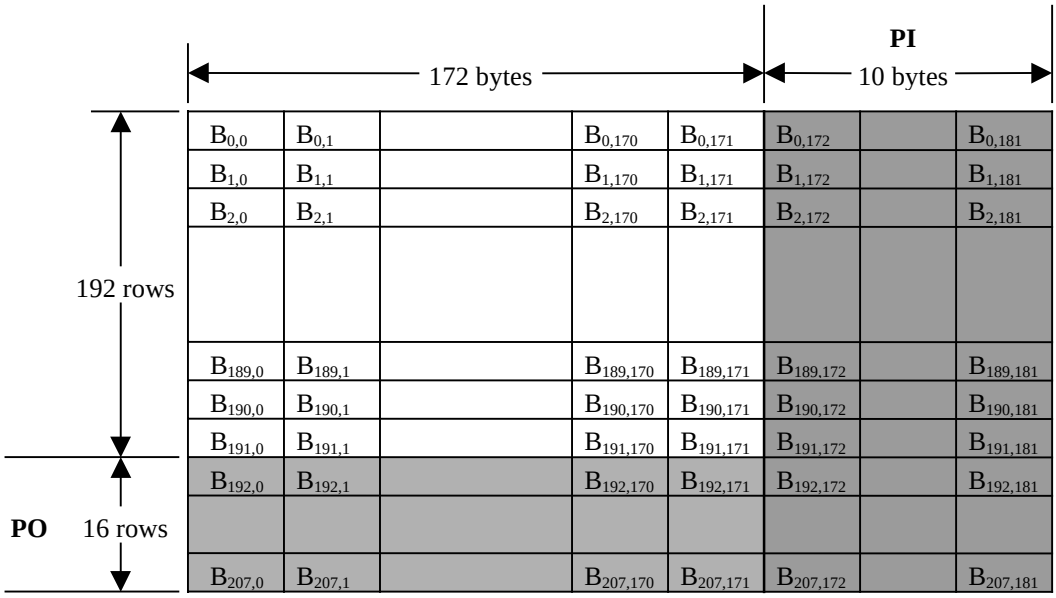

Figure 13 - ECC Block

The PO and PI bytes shall be obtained as follows.

In each of columns j = 0 to 171, the 16 PO bytes are defined by the remainder polynomial $R_j(x)$ to form the outer code RS (208,192,17).

$$R_j(x) = \sum_{i=192}^{207} B_{i,j} x^{207-i} = I_j(x)\, x^{16} \bmod G_{PO}(x)$$

where

$$I_j(x) = \sum_{i=0}^{191} B_{i,j} x^{191-i}$$

$$G_{PO}(x) = \prod_{k=0}^{15} (x + \alpha^k)$$

In each of rows i = 0 to 207, the 10 PI bytes are defined by the remainder polynomial $R_i(x)$ to form the inner code RS(182,172,11).

$$R_i(x) = \sum_{j=172}^{181} B_{i,j} x^{181-j} = I_i(x)\, x^{10} \bmod G_{PI}(x)$$

where

$$I_i(x) = \sum_{j=0}^{171} B_{i,j} x^{171-j}$$

$$G_{PI}(x) = \prod_{k=0}^{9} (x + \alpha^k)$$

α is the primitive root of the primitive polynomial $P(x) = x^8 + x^4 + x^3 + x^2 + 1$

© ISO/IEC 1999 – All rights reserved

Copyright International Organization for Standardization
Provided by IHS under license with ISO
No reproduction or networking permitted without license from IHS
Not for Resale

13.4 Recording Frames

Sixteen Recording Frames shall be obtained by interleaving one of the 16 PO rows at a time after every 12 rows of an ECC Block (figure 14). This is achieved by re-locating the bytes $B_{i,j}$ of the ECC Block as $B_{m,n}$ for

$m = i + \text{int}\,[i / 12]$ and $n = j$ for $i \leq 191$

$m = 13 \times (i - 191) - 1$ and $n = j$ for $i \geq 192$

where int [x] represents the largest integer not greater than x.

Thus the 37 856 bytes of an ECC Block are re-arranged into 16 Recording Frames of 2 366 bytes. Each Recording Frame consists of an array of 13 rows of 182 bytes.

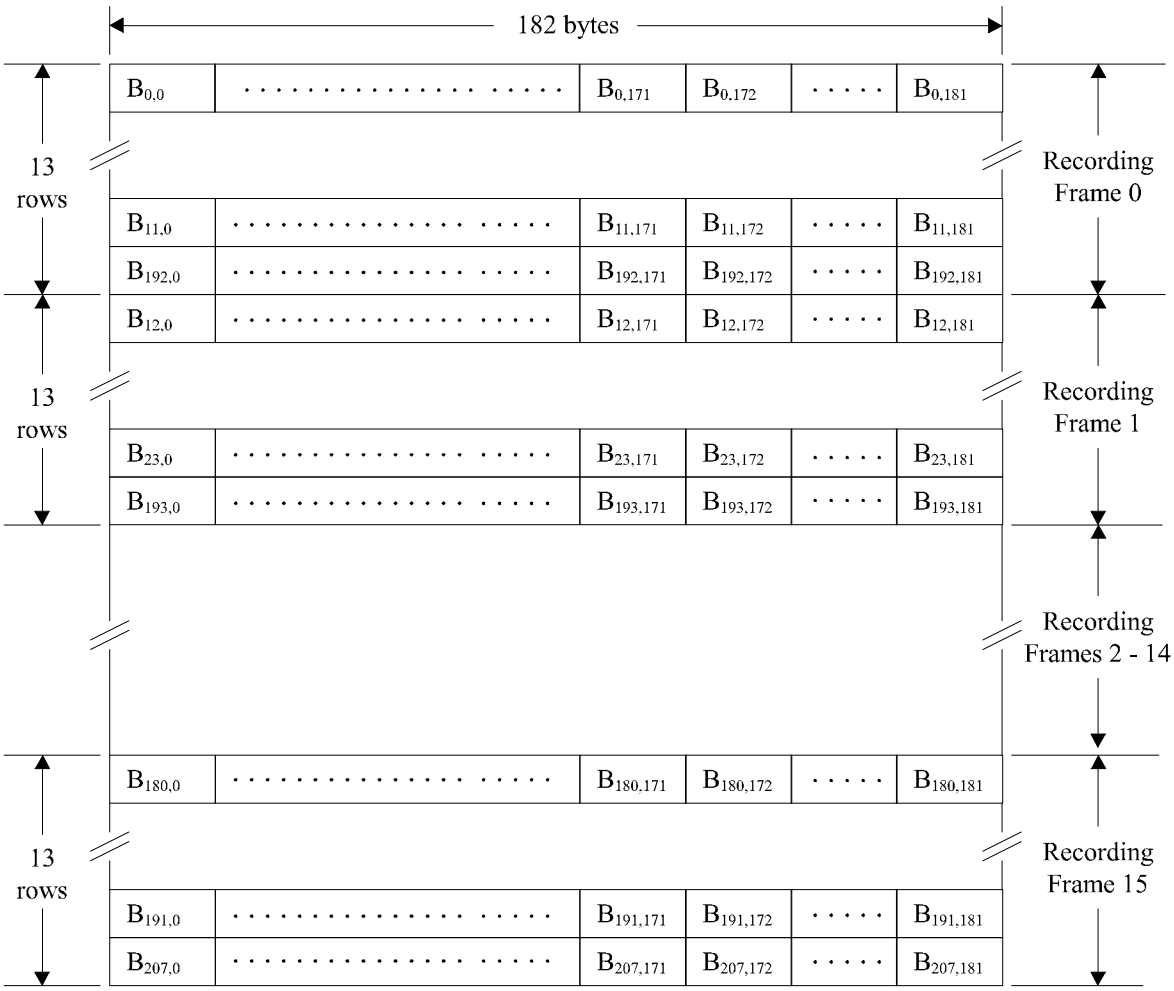

Figure 14 - Recording Frames obtained from an ECC Block

13.5 Modulation and NRZI conversion

The 8-bit bytes of each Recording Frame shall be transformed into 16-bit Code Words with the run length limitation that between 2 ONEs there shall be at least 2 ZEROs and at most 10 ZEROs (RLL(2,10)). Annex F specifies the conversion tables to be applied. The Main Conversion table and the Substitution table specify a 16-bit Code Word for each 256 8-bit bytes with one of 4 States. For each 8-bit byte, the tables indicate the corresponding Code Word, as well as the State for the next 8-bit byte to be encoded.

The 16-bit Code Words shall be NRZI-converted into Channel bits before recording on the disk (see figure 15). The Channel clock period is the time between 2 consecutive channel bits.

© ISO/IEC 1999 – All rights reserved
Copyright International Organization for Standardization
Provided by IHS under license with ISO
No reproduction or networking permitted without license from IHS
Not for Resale

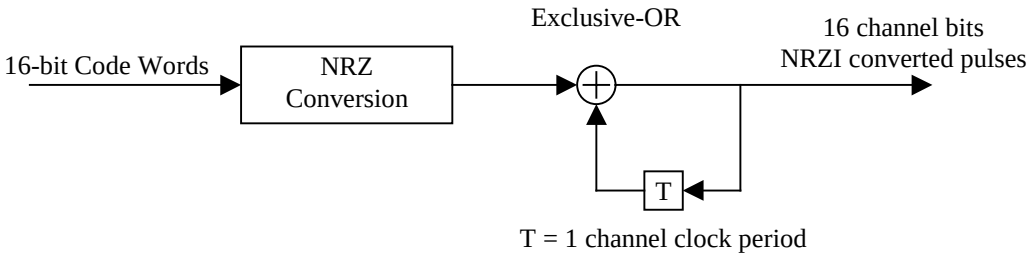

Figure 15 - NRZI conversion

13.6 Physical Sectors

The structure of a Physical Sector is shown in figure 16. It shall consist of 13 rows, each comprising two Sync Frames. A Sync Frame shall consist of a SYNC Code from table 2 and 1 456 Channel bits representing 91 8-bit bytes. Each row of the Physical Sector shall consist of two Sync Frames with the first 1 456 Channel bits representing the first 91 bytes of each row of a Recording Frame and the second 1 456 Channel bits representing the second 91 bytes of each row of a Recording Frame.

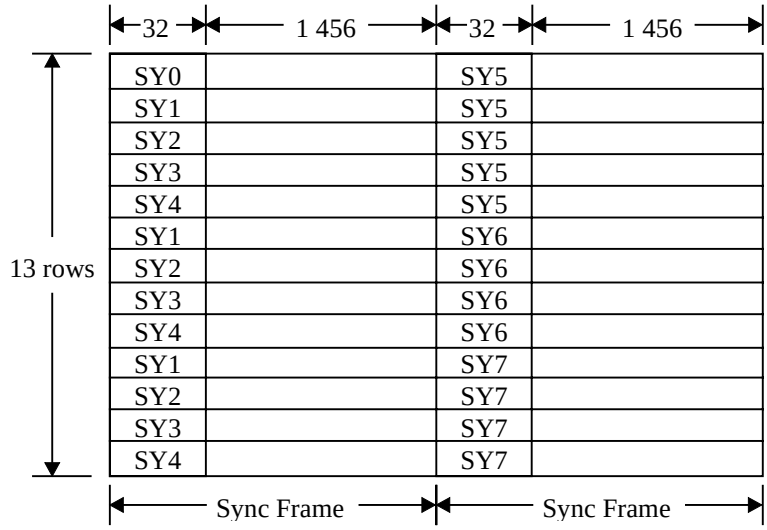

Figure 16 - Physical Sector

Recording of the Physical Sector shall start with the first Sync Frame of the first row, followed by the second Sync Frame of that row, and so on, row-by-row. The state of each SYNC Code and each subsequent set of 16 Channel bits shall follow the rules defined in 13.8.

--`,,```,,,,````-`-`,,`,,`,`,,`---

© ISO/IEC 1999 – All rights reserved

Copyright International Organization for Standardization
Provided by IHS under license with ISO
No reproduction or networking permitted without license from IHS
Not for Resale

Table 2 - SYNC Codes

State 1 and State 2			
Primary SYNC codes		Secondary SYNC codes	
(msb)	(lsb)	(msb)	(lsb)
SY0 = 0001001001000100	0000000000010001 /	0001001000000100	0000000000010001
SY1 = 0000010000000100	0000000000010001 /	0000010001000100	0000000000010001
SY2 = 0001000000000100	0000000000010001 /	0001000001000100	0000000000010001
SY3 = 0000100000000100	0000000000010001 /	0000100001000100	0000000000010001
SY4 = 0010000000000100	0000000000010001 /	0010000001000100	0000000000010001
SY5 = 0010001001000100	0000000000010001 /	0010001000000100	0000000000010001
SY6 = 0010010010000100	0000000000010001 /	0010000010000100	0000000000010001
SY7 = 0010010001000100	0000000000010001 /	0010010000000100	0000000000010001
State 3 and State 4			
Primary SYNC codes		Secondary SYNC codes	
(msb)	(lsb)	(msb)	(lsb)
SY0 = 1001001000000100	0000000000010001 /	1001001001000100	0000000000010001
SY1 = 1000010001000100	0000000000010001 /	1000010000000100	0000000000010001
SY2 = 1001000001000100	0000000000010001 /	1001000000000100	0000000000010001
SY3 = 1000001001000100	0000000000010001 /	1000001000000100	0000000000010001
SY4 = 1000100001000100	0000000000010001 /	1000100000000100	0000000000010001
SY5 = 1000100100000100	0000000000010001 /	1000000100000100	0000000000010001
SY6 = 1001000010000100	0000000000010001 /	1000000001000100	0000000000010001
SY7 = 1000100010000100	0000000000010001 /	1000000010000100	0000000000010001

13.7 Layout of a Recording Unit Block (RUB)

In the Embossed area, each set of 16 Physical Sectors derived from an ECC Block are written continuously with the last Physical Sector of an ECC Block followed immediately by the first Physical Sector of the next ECC Block.

In the Rewritable areas, each set of 16 Physical Sectors from a single ECC Block includes an additional 26 Sync frames to form a Recording Unit Block. The 26 additional Sync frames are referred to as the linking area. This linking area allows for time to set the proper slicing level and to stabilise the Phase Locked Loop (PLL) for proper data extraction.

A RUB consists of an ECC Block and 26 Linking Frames. Each RUB shall be recorded in the following order:

Second part of Sync Frame 1
Sync Frames 2 to 25
ECC Block
Sync Frame 0
First part of Sync Frame 1

A Recording Unit Block is shown in figure 17.

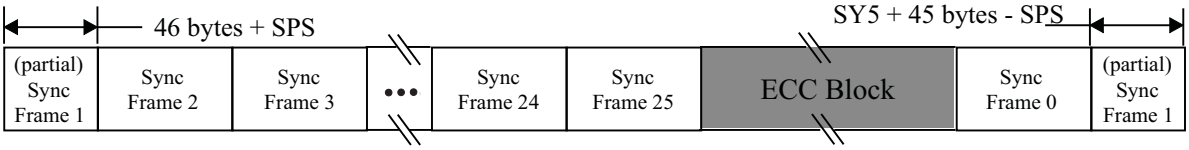

Figure 17 - Recording Unit Block

13.7.1 Sync Frames used for linking

Each Sync Frame nominally consists of a 32-bit Sync code and a sequence of 91 16-bit fields. The Sync codes and fields are shown in table 3.

© ISO/IEC 1999 – All rights reserved
Copyright International Organization for Standardization
Provided by IHS under license with ISO
No reproduction or networking permitted without license from IHS
Not for Resale

Table 3 - Contents of Sync Frames used for linking

Sync Codes	91 16-bit fields	Sync Codes	91 16-bit fields
SY0	Linking Data	SY5	Linking Data | Linking Data
SY1	Linking Data	SY5	Linking Data
SY2	Linking Data	SY5	Linking Data
SY3	Linking Data	SY5	Linking Data
SY4	Linking Data	SY5	Linking Data
SY1	Linking Data	SY6	Linking Data
SY2	Linking Data	SY6	Linking Data
SY3	Linking Data	SY6	Linking Data
SY4	Linking Data	SY6	Linking Data
SY1	Linking Data	SY7	Linking Data
SY2	Linking Data	SY7	Linking Data
SY3	Linking Data	SY7	Linking Data
SY4	Linking Data	SY7	Linking Data

The Linking Data shall consist of 16-Channel bit Code Words specified in annex F and shall meet the requirements of 13.8. The first 12 bytes of the linking data immediately following SY0 shall be set to (00). The remaining bytes shall be chosen such that there are no repetitive sequences that the Start Position Shift (see 13.7.2) cannot randomise and to minimize d.c. content.

13.7.2 Start Position Shift (SPS)

To reduce the amount of media wear caused by repeated writing of the same Channel bit pattern at the same location, the start locations of Frames and ECC Block are varied by randomly changing the number of bytes in the first and last partial Linking Frame of the Recording Unit Block as shown in figure 18.

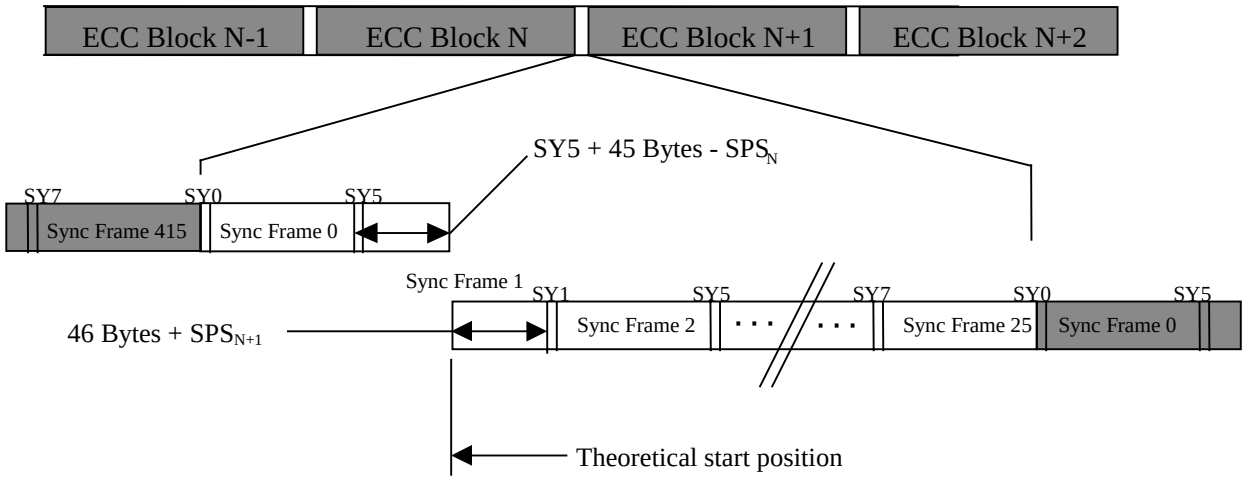

Figure 18 - Start Position Shift

The Start Position Shift shall be -32 bytes ≤ SPS ≤ +31 bytes

13.7.3 Recording Unit Block position

The start of each RUB shall be within 400 Channel bits of the theoretical start position. The theoretical start position is a function of the track number and the position along the current track. The nominal length of each RUB used in calculating the theoretical start position shall be the same as the nominal length of 17 Physical Sectors with the nominal Channel bit length (see annex J). The track pitch used shall be the nominal track pitch of 0,80 μm.

Annex J contains an example of a calculation of the start position of each Recording Unit Block.

© ISO/IEC 1999 – All rights reserved

Copyright International Organization for Standardization
Provided by IHS under license with ISO
No reproduction or networking permitted without license from IHS
Not for Resale

13.8 d.c. component suppression control

To ensure a reliable radial tracking and a reliable detection of the HF signals, the low frequency content of the stream of Channel bit patterns should be kept as low as possible. In order to achieve this, the Digital Sum Value (DSV, see 4.4) shall be kept as low as possible. At the beginning of the modulation, the DSV shall be set to 0.

The different ways of diminishing the current value of the DSV are as follows:

a) Choice of SYNC Codes between Primary or Secondary SYNC Codes.

b) For the 8-bit bytes in the range 0 to 87, the Substitution table offers an alternative 16-bit Code Word for all States.

c) For the 8-bit bytes in the range 88 to 255, when the prescribed State is 1 or 4, then the 16-bit Code Word can be chosen either from State 1 or from State 4, so as to ensure that the RLL requirement is met.

In order to use these possibilities, two data streams, Stream 1 and Stream 2, are generated for each Sync Frame. Stream 1 shall start with the Primary SYNC Code and Stream 2 with the Secondary SYNC Code of the same category of SYNC Codes. As both streams are modulated individually, they generate a different DSV because of the difference between the bit patterns of the Primary and Secondary SYNC Codes.

In the cases b) and c), there are two possibilities to represent a 8-bit byte. The DSV of each stream is computed up to the 8-bit byte preceding the 8-bit byte for which there is this choice. The stream with the lowest $|DSV|$ is selected and duplicated to the other stream. Then, one of the representations of the next 8-bit byte is entered into Stream 1 and the other into Stream 2. This operation is repeated each time case b) or c) occurs.

Whilst case b) always occurs at the same pattern position in both streams, case c) may occur in one of the streams and not in the other because, for instance, the next State prescribed by the previous 8-bit byte can be 2 or 3 instead of 1 or 4. In that case the following 3-step procedure shall be applied:

1) Compare the $|DSV|$ s of both streams.

2) If the $|DSV|$ of the stream in which case c) occurs is smaller than that of the other stream, then the stream in which case c) has occurred is chosen and duplicated to the other stream. One of the representations of the next 8-bit byte is entered into this stream and the other into the other stream.

3) If the $|DSV|$ of the stream in which case c) has occurred is larger than that of the other stream, then case c) is ignored and the 8-bit byte is represented according to the prescribed State.

In both cases b) and c), if the $|DSV|$ s are equal, the decision to choose Stream 1 or Stream 2 is implementation-defined.

The procedure for case a) shall be as follows. At the end of a Sync Frame, whether or not case b) and or case c) have occurred, the DSV of the whole Sync Frame is computed and the stream with the lower $|DSV|$ is selected. If this DSV is greater than + 63 or smaller than -64, then the SYNC Code at the beginning of the Sync Frame is changed from Primary to Secondary or vice versa. If this yields a smaller $|DSV|$, the change is permanent, if the $|DSV|$ is not smaller, the original SYNC Code is retained.

During the DSV computation, the actual values of the DSV may vary between -1 000 and +1 000, thus it is recommended that the count range for the DSV be at least from -1 024 to +1 023.

14 Track format

14.1 Track shape

The Embossed area (see clause 17) in the Information Zone shall contain tracks which consist of a series of embossed pits.

The Rewritable area (see clause 17) in the Information Zone shall contain tracks formed from a single spiral groove. Each track shall form a 360° turn of a continuous spiral. The shape of each track is determined by the requirements in Section 5. Recordings shall be made in the groove.

The tracks in the Rewritable area contain a frequency modulated deviation from the nominal centrelines called wobble, which contains addressing information called Address-in-Pregroove or ADIP (see 14.5.1.1). The tracks also contain periodic occurrences of deviations, a single cycle in length, from the nominal centrelines multiplexed with the wobble. These single cycle deviations are called Alternating Fine Clock Marks or AFCMs (see 14.5.2 and figure 22).

© ISO/IEC 1999 – All rights reserved
Copyright International Organization for Standardization
Provided by IHS under license with ISO
No reproduction or networking permitted without license from IHS
Not for Resale

The tracks shall be continuous in the Information Zone. The tracks in the Embossed area shall start in the Lead-in Zone at a radius of

$$22{,}6\,\text{mm}^{+0{,}0\,\text{mm}}_{-0{,}2\,\text{mm}}$$

The groove tracks in the Rewritable area shall start at a radius of

$$24{,}0\,\text{mm}^{+0{,}0\,\text{mm}}_{-0{,}2\,\text{mm}}$$

14.2 Track path

The track path shall be a continuous spiral from the inside (beginning of the Lead-in Zone) to the outside (end of the Lead-out Zone) when the disk rotates counter-clockwise as viewed from the optical head.

14.3 Track pitch

The track pitch is the distance measured between the average track centrelines of adjacent tracks, measured in the radial direction (see figure 20). The track pitch shall be 0,80 μm ± 0,03 μm. The track pitch averaged over the Data Zone shall be 0,80 μm ± 0,01 μm.

14.4 Track number

Each track shall be identified by a track number.

Track 0 shall begin with the RUB containing Physical Sector (30000).

The track numbers of tracks located at radii larger than track 0 shall be increased by 1 for each track.

The track numbers of tracks located at radii smaller than track 0 shall be negative, and decrease by one for each track. Their value is given in Two's complement.

14.5 Track layout

Each track shall be divided into 8 segments, numbered 0 to 7 (see figure 19). The information contained in the wobble of each segment is called Address-in-Pregroove or ADIP.

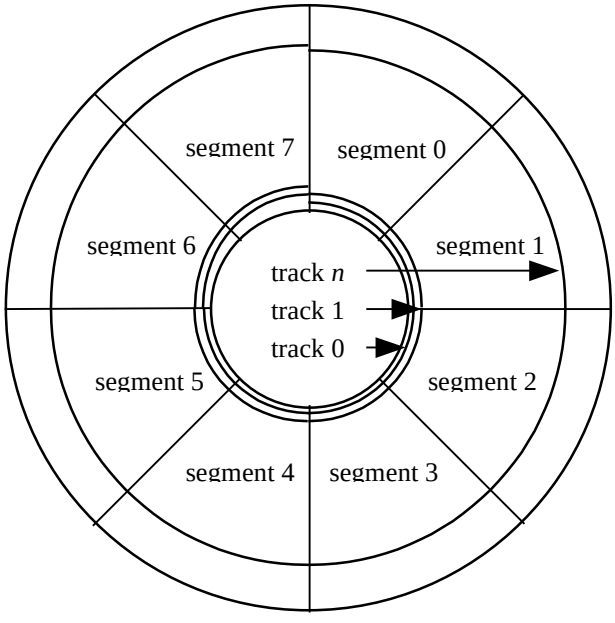

Figure 19 - Track layout

RUBs (see 13.7) are mapped onto the structure of tracks, segments and AFCMs, where each RUB is given a starting point calculated using the nominal values for Channel bit length and track pitch (see annex J).

© ISO/IEC 1999 – All rights reserved

Copyright International Organization for Standardization
Provided by IHS under license with ISO
No reproduction or networking permitted without license from IHS
Not for Resale

14.5.1 Segment layout

The wobble of a segment contains addressing information, called Address in Pre-groove (ADIP), for the track, the segment and layer.

Each segment shall nominally contain 360 wobble cycles. The wobble shall be frequency modulated to contain the ADIP information and shall satisfy table 4.

Table 4 - Wobble modulation

Item	Specification	Values at 20 Hz disk rotation
Carrier frequency	2 880 × disk rotation frequency	57,60 kHz
Deviation	carrier frequency / 15	3,84 kHz
Oscillator output	sine wave	
Oscillator THD (Total Harmonic Distortion)	≤ -40 dB	

An encoding system for generating the groove wobble is shown in annex M.

14.5.1.1 ADIP information

Each segment contains 48 bits of information according to figure 20.

The information is contained in the wobble according to the rules of 14.5.1.2.

b_{47} b_{44}	b_{43} b_{40}	b_{39} b_{20}	b_{19} b_{16}	b_{15} b_{14}	b_{13} b_0
Sync	Layer number	Track number	Segment number	Reserved	CRC

Figure 20 - ADIP segment data

sync

The sync is an 8-Channel bit pattern used for ADIP data synchronization. Syncs are patterns that violate the Biphase-Mark code rules. The synchronization pattern used is 11101000 if the preceding ADIP Channel bit = 0, or 00010111 if the preceding ADIP Channel bit = 1 as shown in figure 21.

Layer Number

The Layer number is designated by a 4-bit binary number with the msb being bit b_{43}. These bits shall be set to 0000 indicating a single layer disk.

Track Number

Each track number is designated by a 20-bit binary number with the msb being bit b_{39}. Track number 0 shall begin with Physical Sector (30000). Track numbers less than 0 are described in 2's complement notation.

Segment Number

Each segment number is designated by a 4-bit binary number with the msb being bit b_{19}. Segments shall be numbered 0 to 7.

Reserved

Bits b_{15} and b_{14} are reserved and shall be set to ZERO.

CRC

The CRC is a 14-bit binary number with the msb located at bit b_{13} used for error detection. The CRC bits are inverted on the disk using 1's complement.

The error detection method uses a 14 bits CRC computed over all bits of layer number, track number, segment number and reserved bits. If the data is error free, the 14-bit CRC shall be divisible by the check polynomial. The msb of the CRC code word is bit b_{43}, and the lsb is bit b_0 of the ADIP segment.

The check polynomial is $P(x) = x^{14} + x^{12} + x^{10} + x^7 + x^4 + x^2 + 1$

© ISO/IEC 1999 – All rights reserved
Copyright International Organization for Standardization
Provided by IHS under license with ISO
No reproduction or networking permitted without license from IHS
Not for Resale

14.5.1.2 Biphase-Mark encoding / decoding

Biphase decoding converts 2 ADIP Channel bits into a single ADIP data bit by using an exclusive OR (table 5).

Table 5 - Biphase-Mark Decoding

ADIP Channel bits	ADIP data bit
00	0
01	1
10	1
11	0

Biphase encoding generates a Channel bit transition between every data bit and a Channel bit transition in the centre of a data bit if the data bit is a ONE. Biphase encoding has maximum run lengths of two ZEROs or ONEs (see figure 21).

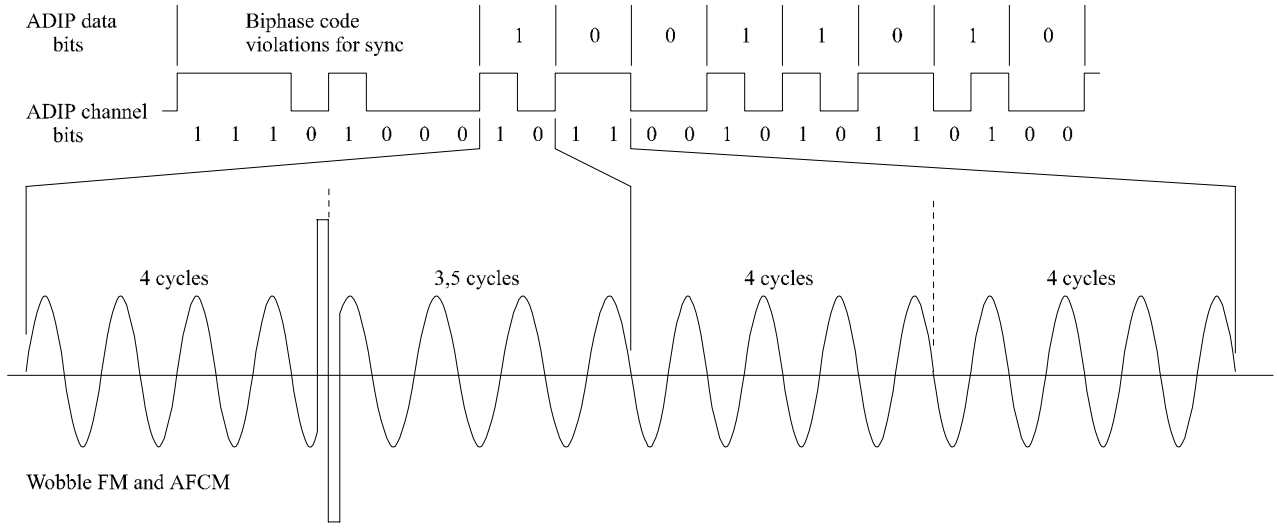

Figure 21 - Biphase modulation

The first AFCM of a segment is centred in the first data bit after the sync, described in 14.5.2.2.

14.5.2 AFCMs

Each track contains 96 equally spaced Alternating Fine Clock Marks (AFCMs), which shall consist of a single cycle multiplexed with the wobble. Each AFCM is inverted from the AFCM in the adjacent tracks as shown in figure 22. The vertical dimensions in figure 22 are not to scale.

© ISO/IEC 1999 – All rights reserved

Copyright International Organization for Standardization
Provided by IHS under license with ISO
No reproduction or networking permitted without license from IHS
Not for Resale

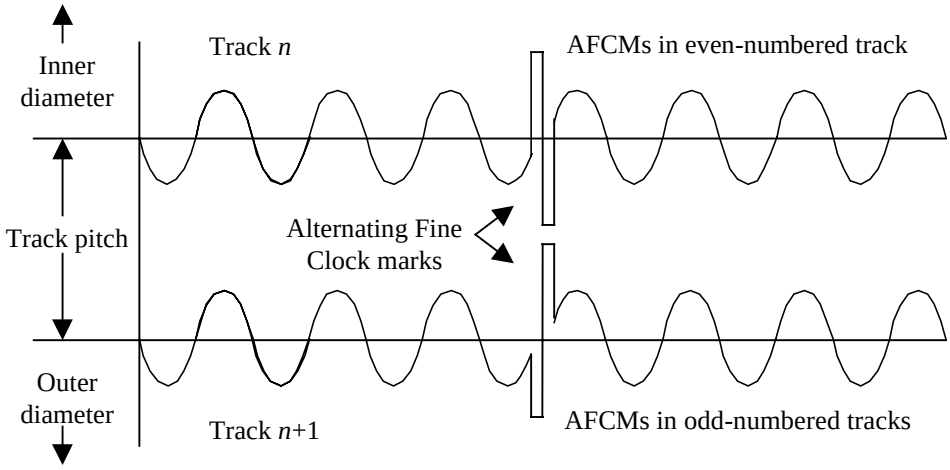

Figure 22 - Deviation of track centreline for wobble and AFCM

14.5.2.1 Radial alignment

Each AFCM shall be nominally placed at intervals of 3,75°. The measured time between consecutive AFCMs of a disk rotating at exactly 20 Hz shall be

T_{AFCM} = 520,8 μs ± 0,5 μs (excluding the influence of eccentricity)

Additionally, the AFCMs shall be radially aligned in such a way that the angular distance between the AFCMs in adjacent physical tracks shall not exceed 10 Channel bit lengths. The angular distance between corresponding AFCMs of any two non-adjacent tracks shall not exceed 32 Channel bits.

14.5.2.2 Alignment of with the wobble

The zero crossing of the first AFCM in segment 0 shall be located at the zero crossing of the wobble in the centre of the first ADIP data bit after the sync (see figure 21) as shown in figure 23 such that W_{off} shall be within 1 % of the nominal wobble period (see 24.6).

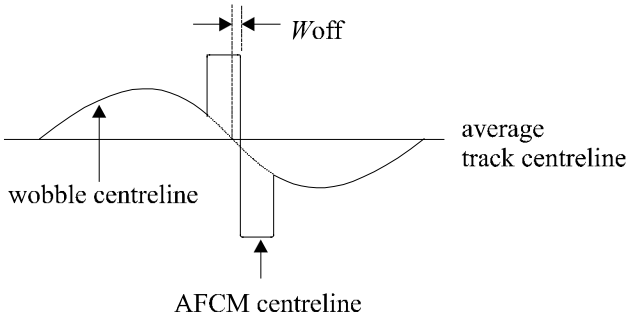

Figure 23 - Wobble to AFCM offset

14.5.2.3 Alignment within track 0

The theoretical start position of the Recording Unit Block containing Physical Sector number (30000) with respect to the first AFCM in segment 0 of track 0 is shown in figure 24.

© ISO/IEC 1999 – All rights reserved
Copyright International Organization for Standardization
Provided by IHS under license with ISO
No reproduction or networking permitted without license from IHS
Not for Resale

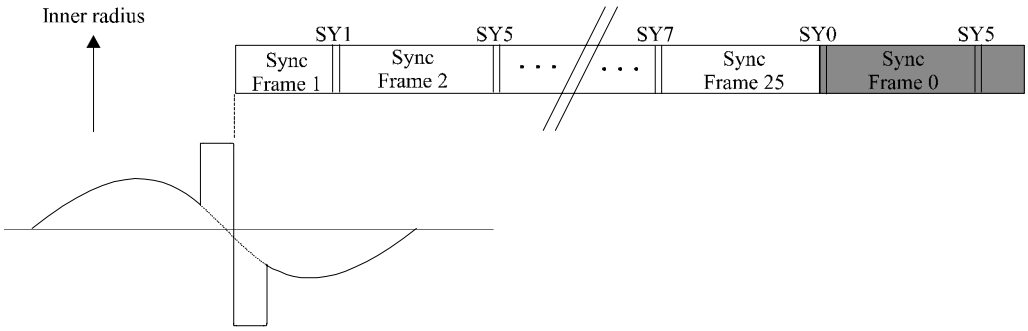

Figure 24 - Alignment of the first RUB recorded in track 0

Section 4 - Format of the Information Zone

15 General description of the Information Zone

The Information Zone shall contain all information on the disk relevant for data interchange. It shall be divided in three parts: the Lead-in Zone, the Data Zone and the Lead-out Zone. In double-sided disks there is one Information Zone per side. The Data Zone is intended for the recording of User Data. The Lead-in Zone contains control information and an area for disk and drive testing. The Lead-out Zone allows for a continuous smooth lead-out and also contains control information and a disk and drive test Zone.

The data in the first five zones of the Lead-in Zone is embossed. The remaining zones of the Lead-in Zone, the Data Zone and the Lead-out Zone constitute the Rewritable area in which the information is recorded using the Phase change effect.

16 Layout of the Information Zone

The Information Zone of single-sided and double-sided disks shall be sub-divided as shown in table 6. The radii indicated in table 6 for some of the Zones are the nominal values of the centre of the first (or last) track of the Zone.

© ISO/IEC 1999 – All rights reserved
Copyright International Organization for Standardization
Provided by IHS under license with ISO
No reproduction or networking permitted without license from IHS
Not for Resale

Table 6 - Layout of the Information Zone

		Description	Nominal radius in mm	PSN of the first Physical Sector	Number of Physical Sectors
Embossed	**Lead-in**	Initial Zone	start 22,60 mm		
		Reference Code Zone		(2F000)	32
		Buffer Zone 1		(2F020)	480
		Control Data Zone		(2F200)	3 072
		Buffer Zone 2		(2FE00)	512
Rewritable		Connection Zone			
		Guard Zone 1	start 24,00 mm	(30000)	512
		Inner Disk Test Zone		(30200)	1 024
		Inner Drive Test Zone		(30600)	1 664
		Guard Zone 2		(30C80)	512
		DMA Zone 1		(30E80)	64
		Inner Disk Identification Zone		(30EC0)	256
		DMA Zone 2		(30FC0)	64
	Data	Data Zone	start 24,16 mm	(31000)	1 474 560
	Lead-out	DMA Zone 3	start 57,5 mm	(199000)	64
		Outer Disk Identification Zone		(199040)	256
		DMA Zone 4		(199140)	64
		Guard Zone 3		(199180)	1 024
		Outer Drive Test Zone		(199580)	3 072
		Outer Disk Test Zone		(19A180)	2 048
		Guard Zone 4	end 58,5 mm	(19A980)	32 768

16.1 Physical Sector Numbers (PSNs)

The first Physical Sector of the Rewritable area shall have PSN (30000) and the PSNs increase by 1 for each next Physical Sector in the Rewritable area. The last Physical Sector in the Embossed area shall have PSN (2FFFF) and the PSNs decrease by one for each preceding Physical Sector in the Embossed area (figure 25).

© ISO/IEC 1999 – All rights reserved
Copyright International Organization for Standardization
Provided by IHS under license with ISO
No reproduction or networking permitted without license from IHS
Not for Resale

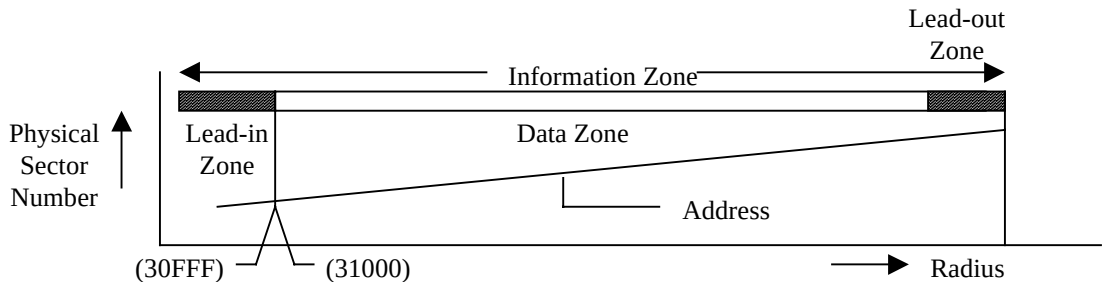

Figure 25 - Physical Sector numbering

17 Lead-in Zone

The Lead-in Zone is the innermost Zone of the Information Zone. It shall consist of the parts shown in figure 26.

The Physical Sector Number of the first and last Physical Sector of each part is indicated in figure 26 in hexadecimal and decimal notation and the number of Physical Sectors in each part are indicated in decimal notation. The shaded area of figure 26 represents the Embossed area of the disk.

--`,,```,,,,````-`-`,,`,,`,`,,`---

© ISO/IEC 1999 – All rights reserved

Copyright International Organization for Standardization
Provided by IHS under license with ISO
No reproduction or networking permitted without license from IHS
Not for Resale

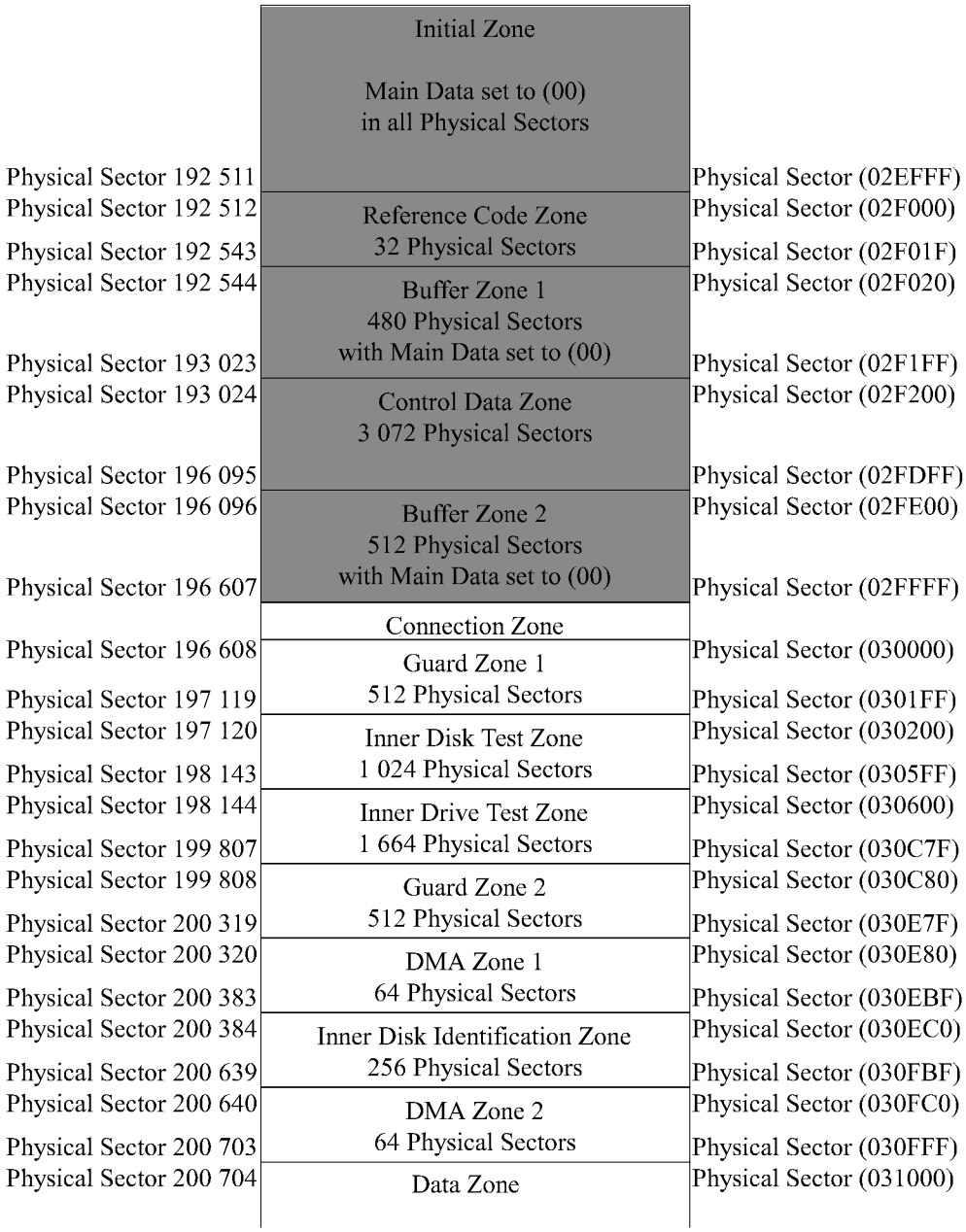

Figure 26 - Lead-in Zone

17.1 Initial Zone

The Main Data of the Data Frames eventually recorded as Physical Sectors in the Initial Zone shall have been set to (00). This International Standard does not specify the number of Physical Sectors in the Initial Zone. However, the Physical Sector Number of the first Physical Sector of the Data Zone is large enough so as to prevent a Physical Sector Number 0 to occur in the Initial Zone.

17.2 Reference Code Zone

The embossed Reference Code Zone shall consist of the 32 Physical Sectors from two ECC Blocks which generate a specific Channel bit pattern on the disk. This shall be achieved by setting to (AC) all 2 048 Main Data bytes of each corresponding Data Frame. Moreover, no scrambling shall be applied to these Data Frames, except to the first 160 Main Data bytes of the first Data Frame of each ECC Block.

17.3 Buffer Zone 1

This embossed Zone shall consist of 480 Physical Sectors from 30 ECC Blocks. The Main Data of the Data Frames eventually recorded as Physical Sectors in this Zone shall have been set to (00).

© ISO/IEC 1999 – All rights reserved
Copyright International Organization for Standardization
Provided by IHS under license with ISO
No reproduction or networking permitted without license from IHS
Not for Resale

17.4 Control Data Zone

This embossed Zone shall consist of 3 072 Physical Sectors from 192 ECC Blocks. The content of the 16 Physical Sectors of each ECC Block is repeated 192 times. The structure of a Control Data Block shall be as shown in figure 27.

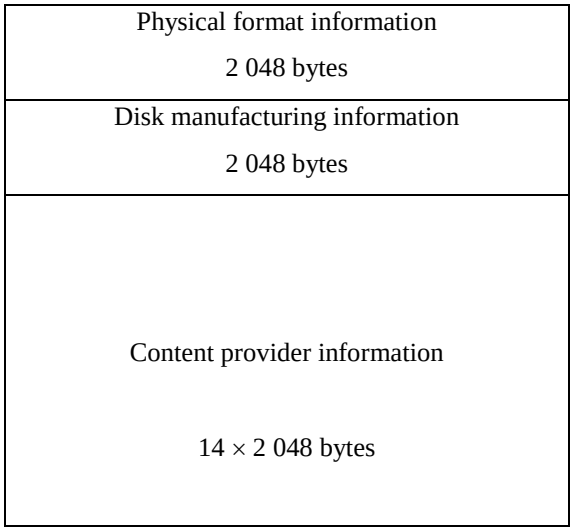

Figure 27 - Structure of a Control Data Block

17.4.1 Physical format information

This information shall comprise the 2 048 bytes shown in table 7. It contains disk information and values used for the Optimum Power Control (OPC) algorithm to determine optimum laser power levels for writing (see annex G).

© ISO/IEC 1999 – All rights reserved

Copyright International Organization for Standardization
Provided by IHS under license with ISO
No reproduction or networking permitted without license from IHS
Not for Resale

Table 7 - Physical format information

Byte number	Content	Number of bytes
0	Disk Category and Version Number	1
1	Disk size	1
2	Disk structure	1
3	Recording density	1
4 to 15	Data Zone allocation	12
16 to 31	Reserved - All (00)	16
32	Recording velocity	1
33	Maximum read power at maximum velocity	1
34	P_{IND} at maximum velocity	1
35	ρ at maximum velocity	1
36	$\varepsilon 1$ at maximum velocity	1
37	$\varepsilon 2$ at maximum velocity	1
38	γ_{target} at maximum velocity	1
39	Maximum read power at reference velocity	1
40	P_{IND} at reference velocity	1
41	ρ at reference velocity	1
42	$\varepsilon 1$ at reference velocity	1
43	$\varepsilon 2$ at reference velocity	1
44	γ_{target} at reference velocity	1
45	Maximum read power at minimum velocity	1
46	P_{IND} at minimum velocity	1
47	ρ at minimum velocity	1
48	$\varepsilon 1$ at minimum velocity	1
49	$\varepsilon 2$ at minimum velocity	1
50	γ_{target} at minimum velocity	1
51 to 2 047	Reserved - All (00)	1 997

Byte 0 - Disk Category and Version Number

Bits b_7 to b_4 shall specify the Disk Category,
they shall be set to 1001, indicating a +RW disk.

Bits b_3 to b_0 shall specify the Version Number,
they shall be set to 0001 indicating this International Standard

Byte 1 - Disk size and maximum transfer rate

Bits b_7 to b_4 shall specify the disk size,
they shall be set to 0000, indicating a 120 mm disk

Bits b_3 to b_0 shall specify the maximum transfer rate,
they shall be set to 1111 indicating no maximum transfer rate is specified

© ISO/IEC 1999 – All rights reserved
Copyright International Organization for Standardization
Provided by IHS under license with ISO
No reproduction or networking permitted without license from IHS
Not for Resale

Byte 2 - Disk structure

Bit b_7 to b_4	shall be set to 0000
Bits b_3 to b_0	shall specify the type of the recording layer(s), they shall be set to 0100, indicating a rewritable recording layer

Byte 3 - Recording density

Bits b_7 to b_4	shall specify the average Channel bit length in the Rewritable area, they shall be set to 1000, indicating 0,176 37 μm
Bits b_3 to b_0	shall specify the average track pitch, they shall be set to 0001, indicating an average track pitch of 0,80 mm

Bytes 4 to 15 - Data Zone allocation

Byte 4	shall be set to (00).
Bytes 5 to 7	shall be set to (31000) to specify PSN 200 704 of the first Physical Sector of the Data Zone
Byte 8	shall be set to (00).
Bytes 9 to 11	shall be set to (198FFF) to specify PSN 1 675 263 of the last Physical Sector of the Data Zone
Bytes 12 to 15	shall be set to (00)

Bytes 16 to 31 - Reserved

These bytes shall be set to (00).

Byte 32 - Recording velocity

This byte specifies the recording velocity of the disk, which determines the maximum and minimum linear writing velocities. It shall be

set to (00) for a CLV disk with linear velocities of 4,90 m/s to 6,25 m/s.

set to (01) for a CAV disk with linear velocities of 3,02 m/s to 7,35 m/s.

The reference velocity for both Types of disks is 4,90 m/s.

Byte 33 - Maximum read power, P_r at maximum velocity

This byte shall specify the maximum read power P_r in milliwatts at the maximum velocity as a number *n* such that

$$n = 20 \times (P_r - 1)$$

Byte 34 - P_{IND} at maximum velocity

This byte shall specify the indicative value P_{IND} of P_{target} in milliwatts at the maximum velocity as a number *n* such that

$$n = 20 \times (P_{IND} - 5)$$

P_{IND} is the starting value for the determination of P_{target} used in the OPC algorithm, see annex G.

Byte 35 - ρ at maximum velocity

This byte shall specify the peak power multiplication factor ρ at the maximum velocity used in the OPC algorithm (see annex G) as a number *n* such that

$$n = 100 \times \rho$$

Byte 36 - ε1 at maximum velocity

This byte shall specify the bias1/write power ratio ε1 at the maximum velocity used in the OPC algorithm (see annex G) as a number *n* such that

$$n = 200 \times \varepsilon 1$$

--`,,```,,,,````-`-`,,`,,`,`,,`---

© ISO/IEC 1999 – All rights reserved

Copyright International Organization for Standardization
Provided by IHS under license with ISO
No reproduction or networking permitted without license from IHS
Not for Resale

Byte 37 - ε2 at maximum velocity

This byte shall specify the bias2/write power ratio ε2 at the maximum velocity used in the OPC algorithm (see annex G) as a number *n* such that

$$n = 200 \times \varepsilon 2$$

Byte 38 - γ_{target} at maximum velocity

This byte shall specify the target value for γ, γ_{target} at the maximum velocity used in the OPC algorithm (see annex G) as a number *n* such that

$$n = 20 \times \gamma_{target}$$

Byte 39 - Maximum read power at reference velocity

This byte shall specify the maximum read power P_r in milliwatts at the reference velocity as a number *n* such that

$$n = 20 \times (P_r - 1)$$

Byte 40 - P_{IND} at reference velocity

This byte shall specify the indicative value P_{IND} of P_{target} in milliwatts at the reference velocity as a number *n* such that

$$n = 20 \times (P_{IND} - 5)$$

P_{IND} is the starting value for the determination of P_{target} used in the OPC algorithm, see annex G.

Byte 41 - ρ at reference velocity

This byte shall specify the peak power multiplication factor ρ at the reference velocity used in the OPC algorithm (see annex G) as a number *n* such that

$$n = 100 \times \rho$$

Byte 42 - ε1 at reference velocity

This byte shall specify the bias1/write power ratio ε1 at the reference velocity used in the OPC algorithm (see annex G) as a number *n* such that

$$n = 200 \times \varepsilon 1$$

Byte 43 - ε2 at reference velocity

This byte shall specify the bias2/write power ratio ε2 at the reference velocity used in the OPC algorithm (see annex G) as a number *n* such that

$$n = 200 \times \varepsilon 2$$

Byte 44 - γ_{target} at reference velocity

This byte shall specify the target value for γ, γ_{target} at the reference velocity used in the OPC algorithm (see annex G) as a number *n* such that

$$n = 20 \times \gamma_{target}$$

Byte 45 - Maximum read power at minimum velocity

This byte shall specify the maximum read power P_r in milliwatts at the minimum velocity as a number *n* such that

$$n = 20 \times (P_r - 1)$$

Byte 46 - P_{IND} at minimum velocity

This byte shall specify the indicative value P_{IND} of P_{target} in milliwatts at the minimum velocity as a number *n* such that

$$n = 20 \times (P_{IND} - 5)$$

P_{IND} is the starting value for the determination of P_{target} used in the OPC algorithm, see annex G.

© ISO/IEC 1999 – All rights reserved
Copyright International Organization for Standardization
Provided by IHS under license with ISO
No reproduction or networking permitted without license from IHS
Not for Resale

Byte 47 - ρ at minimum velocity

This byte shall specify the peak power multiplication factor ρ at the minimum velocity used in the OPC algorithm (see annex G) as a number *n* such that

$$n = 100 \times \rho$$

Byte 48 - ε1 at minimum velocity

This byte shall specify the bias1/write power ratio ε1 at the minimum velocity used in the OPC algorithm (see annex G) as a number *n* such that

$$n = 200 \times \varepsilon 1$$

Byte 49 - ε2 at minimum velocity

This byte shall specify the bias2/write power ratio ε2 at the minimum velocity used in the OPC algorithm (see annex G) as a number *n* such that

$$n = 200 \times \varepsilon 2$$

Byte 50 - γ_{target} at minimum velocity

γ_{target} at the minimum velocity used in the OPC algorithm (see annex G) of this International Standard and shall be set to (00).

Bytes 51 to 2 047 - Reserved - All (00)

These bytes shall be set to all (00).

17.4.2 Disk manufacturing information

This International Standard does not specify the format and the content of these 2 048 bytes. They shall be ignored in interchange.

17.4.3 Content provider information

These 28 672 bytes shall be set to all (00), unless the interchange parties have reached agreement on the format and content.

17.5 Buffer Zone 2

This embossed Zone shall consist of 512 Physical Sectors from 32 ECC Blocks. The Main Data of the Data Frames eventually recorded as Physical Sectors in this Zone shall be set to all (00).

17.6 Connection Zone

Transition area between the Embossed area and Rewritable area. The groove shall begin at the same radius as the end of the last embossed pit along the same track path as shown in figure 28. The Connection Zone shall comprise 5 tracks numbered from -5 to -1 and a partial non-groove track of length x_{gap}.

© ISO/IEC 1999 – All rights reserved

Copyright International Organization for Standardization
Provided by IHS under license with ISO
No reproduction or networking permitted without license from IHS
Not for Resale

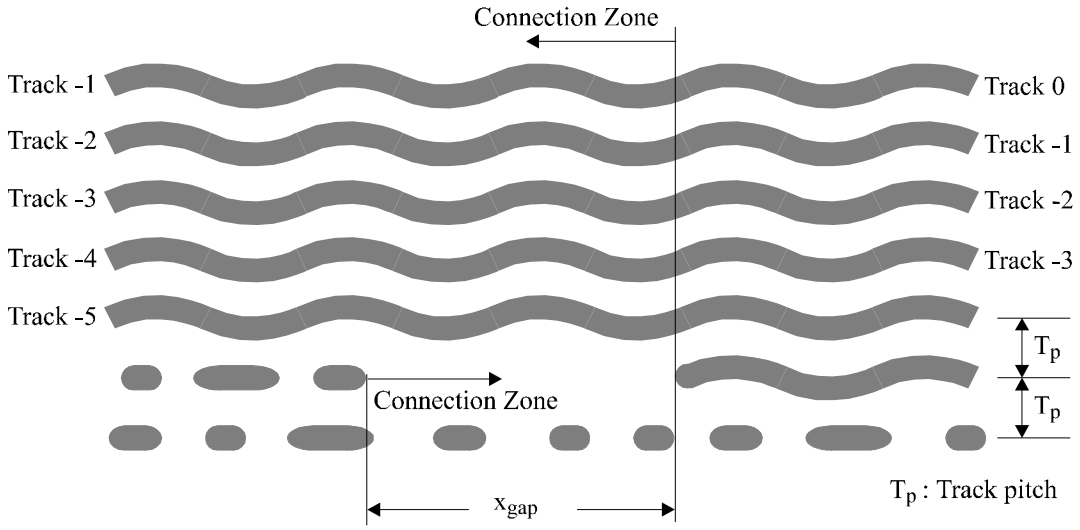

Figure 28 - Connection Zone

The groove shall start at a tangential distance x_{gap} less than 250 μm from the end of the last track of the Embossed area.

17.7 Guard Zone 1

This Guard Zone is used as a protection for separating test writing zones from information zones containing embossed data. This Zone shall be unrecorded or filled with Main Data set to (00). This zone shall contain 512 Physical Sectors.

17.8 Inner Disk Test Zone

1 024 Physical Sectors reserved for disk manufacturer testing.

17.9 Inner Drive Test Zone

1 664 Physical Sectors reserved for drive testing and OPC algorithm.

17.10 Guard Zone 2

This Guard Zone is used as a protection for separating test writing zones from information zones containing rewritable data. This Zone shall be unrecorded or filled with Main Data set to (00). This zone shall contain 512 Physical Sectors.

17.11 DMA Zone 1

64 Physical Sectors reserved for the first Defect Management Area. The contents of this Zone shall be as specified in clause 20.

17.12 Inner Disk Identification Zone

256 Physical Sectors reserved for information agreed upon by the data interchange parties. Each set of 16 Physical Sectors from one ECC Block is called a Disk Control ECC Block (see clause 21).

17.13 DMA Zone 2

64 Physical Sectors reserved for the second Defect Management Area. The contents of this Zone shall be as specified in clause 20.

18 Data Zone

1 474 560 Physical Sectors of user data area.

19 Lead-out Zone

The Lead-out Zone is the outermost zone of the Information Zone. It shall consist of the parts specified in figure 29.

The Physical Sector Number of the first and the last Physical Sector of each part is indicated in figure 29 in hexadecimal and decimal notation and the number of Physical Sectors in each part is indicated in decimal notation.

© ISO/IEC 1999 – All rights reserved
Copyright International Organization for Standardization
Provided by IHS under license with ISO
No reproduction or networking permitted without license from IHS
Not for Resale

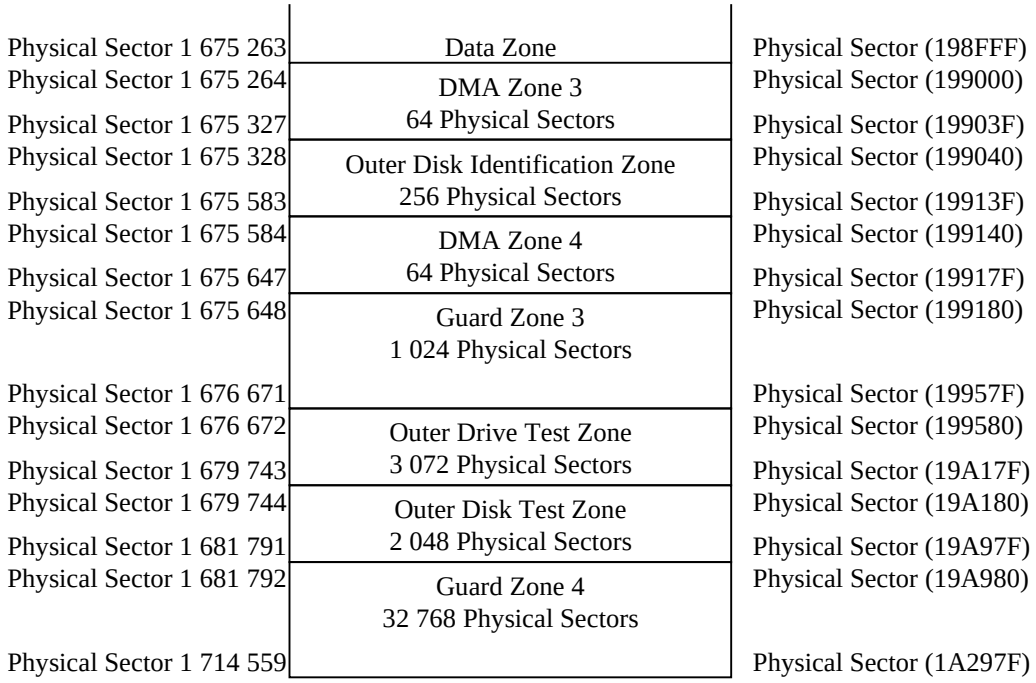

Figure 29- Lead-out Zone

19.1 DMA Zone 3

64 Physical Sectors reserved for the third Defect Management Area. The contents of this Zone shall be as specified in clause 20.

19.2 Outer Disk Identification Zone

256 Physical Sectors reserved for information agreed upon by the data interchange parties. Each set of 16 Physical Sectors from one ECC Block is called a Disk Control ECC Block (see clause 21).

19.3 DMA Zone 4

64 Physical Sectors reserved for the fourth Defect Management Area. The contents of this Zone shall be as specified in clause 20.

19.4 Guard Zone 3

This Guard Zone is used as a protection for separating test writing zones from information zones containing rewritable data. This Zone shall be unrecorded or filled with Main Data set to (00). This zone shall contain 1 024 Physical Sectors.

19.5 Outer Drive Test Zone

3 072 Physical Sectors reserved for drive testing and OPC algorithm.

19.6 Outer Disk Test Zone

2 048 Physical Sectors reserved for disk manufacturer testing.

19.7 Guard Zone 4

This Zone shall be unrecorded or filled with Main Data set to (00). This zone shall contain 32 768 Physical Sectors.

20 The use of the Defect Management Areas

There shall be four Defect Management Areas (DMA Zones 1 to 4) according to table 6, each containing 64 Physical Sectors. All DMA Zones shall contain the same data.

Each DMA contains a Primary Defect List (PDL), a Secondary Defect List (SDL), and 2 Reserved areas. Each of these areas shall be 16 Physical Sectors in length.

All defect management is performed on ECC Block boundaries. An ECC Block is identified by the Physical Sector Number of the first Physical Sector in the ECC Block for all entries in the PDL and the SDL.

© ISO/IEC 1999 – All rights reserved

Copyright International Organization for Standardization
Provided by IHS under license with ISO
No reproduction or networking permitted without license from IHS
Not for Resale

20.1 Defect Management Areas

The content of each of the ECC Blocks is shown in table 8. All copies of the PDL shall be identical. All copies of the SDL shall be identical. All Reserved areas shall contain Main Data all set to (00).

Table 8 - DMA ECC Block layout

DMA Zone	Physical Sector Number of the first Physical Sector in the block	Contents
DMA Zone 1	(30E80)	PDL
	(30E90)	SDL
	(30EA0)	Reserved
	(30EB0)	Reserved
DMA Zone 2	(30FC0)	PDL
	(30FD0)	SDL
	(30FE0)	Reserved
	(30FF0)	Reserved
DMA Zone 3	(199000)	PDL
	(199010)	SDL
	(199020)	Reserved
	(199030)	Reserved
DMA Zone 4	(199140)	PDL
	(199150)	SDL
	(199160)	Reserved
	(199170)	Reserved

20.2 Primary Defect List (PDL)

The PDL contains a list of ECC Blocks determined to be defective.

Any updates to the PDL may change the logical to physical mapping. The PDL shall be updated after each formatting operation. The PDL shall be recorded as shown in table 9.

Table 9 - Format of PDL

BP in ECC Block	Contents	Number of bytes
0	PDL Identifier = (2A50)	2
2	Number of PDL entries (N_PDL)	2
4	PDL Update Count	4
8	Spare Interval	4
12	Spare Length	4
16	PDL entry 0	4
20	PDL entry 1	4
…	…	…
N_PDL × 4 + 12	PDL entry N_PDL - 1	4
N_PDL × 4 +16 to 32 767	Reserved set to (00)	…

The PDL Identifier shall be set to (2A50) to identify a PDL recorded according to this standard.

The Number of PDL entries shall indicate the total number of entries in the PDL.

© ISO/IEC 1999 – All rights reserved
Copyright International Organization for Standardization
Provided by IHS under license with ISO
No reproduction or networking permitted without license from IHS
Not for Resale

The PDL Update Count shall specify the total number of update operations for the PDL area. This field shall be set to (00000000) during the first format or certification operation, and shall be incremented by one each time the PDL is recorded.

The Spare Interval (SI) field shall indicate the number of Physical Sectors allocated for User Data between each set of ECC Blocks reserved for linear replacement operations. This value shall be 2^N, where $N \geq 4$. There is no explicit relationship to the disk size.

The Spare Length (SL) field shall indicate the number of Physical Sectors set aside for linear replacement prior to each Spare Interval. This value shall be zero or 2^M, where $M \geq 4$. There is no explicit relationship to the disk size. The layout, as the result of a non-zero SL is shown in figure 30.

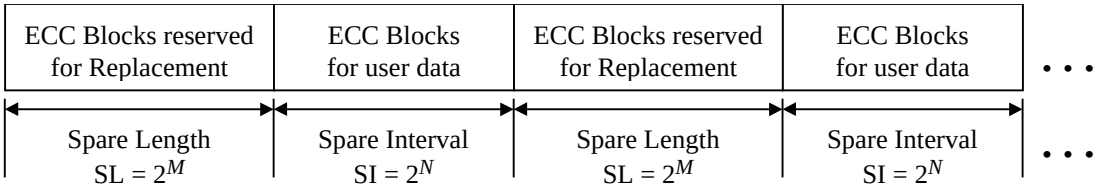

Figure 30 - ECC Blocks reserved for Replacement

Each PDL entry shall be recorded as shown in table 10.

Table 10 - PDL Entry

b_{31} b_{30}	b_{29} b_{24}	b_{23} b_0
Defect Type	Reserved	Defective Block Number

The defect type shall be set as shown in table 11.

Table 11 - PDL Entry Defect Type definition, b_{31} and b_{30}

Defect Type	Definition
00	Shall indicate that the entry was generated by the disk manufacturer.
01	Shall indicate that the entry was generated by user certification.
10	Shall indicate that the entry was generated by the user by means other than certification.
11	Shall indicate that the entry was generated by the disk manufacturer but shall be ignored when slipping.

The Defective Block Number shall contain the Physical Sector Number of the first Physical Sector of the ECC Block to be skipped when assigning LSNs.

Entries with Defect Types 00, 01, or 10 shall be sorted in ascending order by the Defective Block Number field. The Defect Type shall be ignored when sorting among Defect Types 00, 01, and 10. Entries with Defect Type 11 shall be sorted by the Defective Block Number field and shall be located after all entries with Defect Types 00, 01 or 10. Defect Types 00 and 11 shall not occur on the same disk. Defect Type 11 allows the PDL to be retained even when it is not used, so that it can be re-applied during a subsequent format operation.

The set of entries with Defect Types 00 or 11 shall constitute the Manufacturer's Certification List.

20.3 Secondary Defect List (SDL)

The SDL contains a list of ECC Blocks determined to be defective during use of the media and ECC Blocks reserved for replacement areas. The defective ECC Block shall be linearly replaced by a reserved ECC Block as assigned in the SDL. Identifying defective ECC Blocks may happen during either read or write operations. The SDL shall be updated after formatting and each time linear replacement occurs. The SDL shall be recorded as shown in table 12.

© ISO/IEC 1999 – All rights reserved

Copyright International Organization for Standardization
Provided by IHS under license with ISO
No reproduction or networking permitted without license from IHS
Not for Resale

Table 12 - Format of SDL

BP in ECC Block	Contents	Length in bytes
0	SDL Identifier = (2A53)	2
2	Number of SDL entries (N_SDL)	2
4	SDL Update Count	4
8	SDL entry 0	8
16	SDL entry 1	8
…	…	…
N_SDL × 8	SDL entry N_SDL - 1	8
N_SDL × 8 + 8 to 32 767	Reserved set to (00)	…

The SDL Identifier shall be set to (2A53) to identify an SDL recorded according to this standard.

The Number of SDL entries shall indicate the total number of entries in the SDL.

The SDL Update Count shall specify the total number of update operations for the SDL area. This field shall be set to (00000000) during the first format or certification operation, and shall be incremented by one each time the SDL is re-written.

Each SDL entry shall be formatted as shown in table 13.

Table 13 - SDL entry format

b_{63} b_{62}	b_{61} b_{56}	b_{55} b_{32}	b_{31} b_{24}	b_{23} b_0
Status	Reserved	Defective Block Number	Reserved	Replacement Block Number

The Status field shall indicate the status of the entry as shown in table 14.

Table 14 - SDL Entry Status definition, b_{63} and b_{62}

Status	Definition
00	The entry identifies a valid replacement.
01	The entry identifies a defective location on the medium that has not been recorded at its new address.
10	The Replacement Block Number field identifies an area usable for future replacement. The Defective Block Number field shall be set to zero.
11	The Replacement Block Number field identifies a replacement location unusable for future replacement. The Defective Block Number field shall be set to zero.

The Defective Block Number shall identify the PSN of the first Physical Sector of the ECC Block to be replaced.

The Replacement Block Number shall identify the PSN of the first Physical Sector of the ECC Block to hold the replaced ECC Block.

There shall not be any hierarchical replacements; no Replacement Block Number shall be equal to any Defective Block Number field.

Each of the ECC Blocks set aside for replacement but not in use, shall be identified by an SDL entry (with Status 10).

© ISO/IEC 1999 – All rights reserved
Copyright International Organization for Standardization
Provided by IHS under license with ISO
No reproduction or networking permitted without license from IHS
Not for Resale

The SDL shall be sorted in ascending order as if each entry were a single 64 bit unsigned integer, which means: first sorted by Status, and within Status by Defective Block Number, and within Defective Block Number by Replacement Block Number.

20.4 Assignment of Logical Sector Numbers (LSNs)

Logical Sector Numbers (LSNs) shall be assigned contiguously from LSN 0, typically starting from the first PSN after the first replacement area, PSN (31000 + SL) to the end of the Data Zone, except that all ECC Blocks listed in the PDL and all ECC Blocks set aside for replacement shall be excluded and not be assigned LSNs. The LSN of the next Physical Sector, following one or more excluded ECC Blocks, shall be one greater than the LSN of the last Physical Sector of the last ECC Block preceding the excluded ECC Blocks (see figure 31).

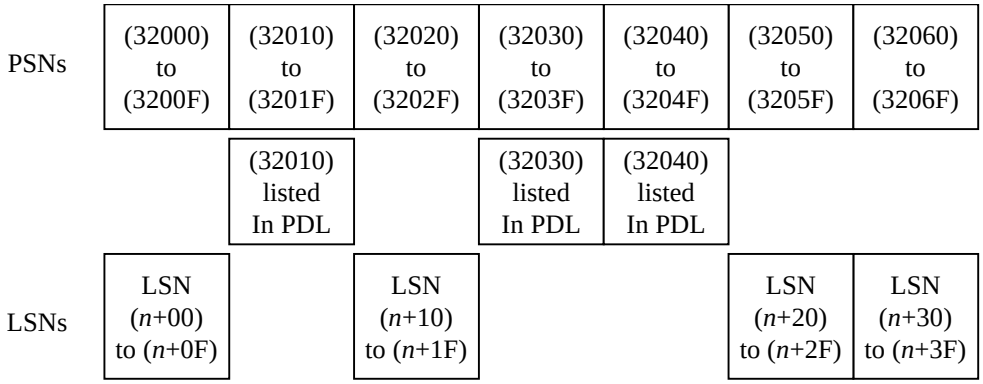

Figure 31 - Example of LSN assignments due to PDL

20.5 Slipping and Linear Replacement algorithms and requirements

The total amount of slipped and replaced ECC Blocks shall be limited by the following requirement:

$$(N_PDL \times 4 + N_SDL \times 8) \leq 32\,744$$

Slipping and Linear Replacement shall occur only in the Data Zone.

A PSN shall be listed a maximum of once in the combined set of PDL or the SDL entries.

Translation of LSNs to PSNs shall be performed in the following order:

1) skip the areas set aside for replacement,
2) second apply the PDL,
3) apply the SDL.

Refer to annex H for example algorithms.

21 Disk Control ECC Blocks (DCBs)

Disk Control ECC Blocks are provided as a structure on the disk to include additional information for interchange between the data interchange parties. DCBs are recorded in the Inner and Outer Disk Identification Zones. All DCBs shall have the same format for the first 40 data bytes.

21.1 Format of Disk Control ECC Blocks

The Main Data of each Disk Control ECC Block shall be according to table 15.

© ISO/IEC 1999 – All rights reserved

Copyright International Organization for Standardization
Provided by IHS under license with ISO
No reproduction or networking permitted without license from IHS
Not for Resale

Table 15 - Format of each Disk Control ECC Block

Physical Sector of each DCB	Main Data BP	Description
0	D_0 to D_3	Content Descriptor
0	D_4 to D_7	Unknown Content Descriptor Actions
0	D_8 to D_{39}	Vendor ID
0	D_{40} to $D_{2\,047}$	Reserved
1 to 15	D_0 - $D_{2\,047}$	Reserved

Each DCB with a Content Descriptor (see 21.1) not set to (00000000), (FFFFFFFE), or (FFFFFFFF) in the Inner Disk Identification Zone shall have an identical DCB in the Outer Disk Identification Zone. The order of the DCBs in the Inner Disk Identification Zone is not necessarily the same as the order of the DCBs in the Outer Disk Identification Zone.

Bytes D_0 to D_3 - Content Descriptor

if set to (00000000)

the DCB is unused.
The Content Descriptor of all subsequent DCBs in this Inner or Outer Disk Identification shall be set to (00000000).
All remaining bytes, D_4 to $D_{2\,047}$ of Physical Sector 0 and D_0 to $D_{2\,047}$ of Physical Sector 1 to 15 in table 15 shall be set to (00).

if set to (FFFFFFFE)

This DCB is bad and shall not be used.

if set to (FFFFFFFF)

This DCB was previously used and is now available for reuse.
All remaining bytes, D_4 to $D_{2\,047}$ of Physical Sector 0 and D_0 to $D_{2\,047}$ of Physical Sector 1 to 15 in table 15 shall be set to (00).

All other values for the Content Descriptor are reserved.

Each new DCB added to the Inner or the Outer Disk Identification Block shall be written at the first unused DCB (Content Descriptor = (00000000) or (FFFFFFFF)).

Bytes D_4 to D_7 - Unknown Content Descriptor Actions

These bits are provided to specify required actions when the content and use of the DCB are unknown (i.e. the content descriptor is not set to a known assigned value). These bytes form a field consisting of 32 individual bits.

Bits b_{31} to b_4 — Reserved
These bits shall be set to all ZERO.

Bit b_3 — DCB overwrite
if set to ONE, modifying the current Disk Control ECC Block shall not be allowed, else it shall be set to ZERO.

Bit b_2 — Formatting
if set to ONE, reformatting of the disk shall not be allowed, else it shall be set to ZERO.

Bit b_1 — Data Zone read
if set to ONE, reading shall not be allowed in the Data Zone, else it shall be set to ZERO.

Bit b_0 — Data Zone write
if set to ONE, recording shall not be allowed in the Data Zone, else it shall be set to ZERO.

--`,,```,,,,````-`-`,,`,,`,`,,`---

© ISO/IEC 1999 – All rights reserved
Copyright International Organization for Standardization
Provided by IHS under license with ISO
No reproduction or networking permitted without license from IHS
Not for Resale

Bytes D_8 to D_{39} Vendor ID

Bytes reserved for Vendor ID information.

Section 5 - Characteristics of the groove

22 General

All recording shall occur only in grooved areas. The groove centreline is deviated from the average track centreline with a modulated frequency (see figure 20). Physical addressing information can be decoded from the frequency modulated wobble, while additional timing information can be obtained from the Alternating Fine Clock Marks (AFCM).

The format of the groove information on the disk is defined in 14.5.1.1. Clause 24 specifies the requirements for the signals from grooves, as obtained when using the Reference Drive.

23 Method of testing

23.1 Environment

All signals in clause 24 shall be within their specified ranges with the disk in the test environment conditions defined in 8.1.1.

23.2 Reference Drive

All signals specified in clause 24 shall be measured in the indicated channels of the Reference Drive. The drive shall have the following characteristics for the purpose of these tests.

23.2.1 Optics and mechanics

The focused optical beam shall have the properties defined in 9.2 a) to i). The disk shall rotate counter-clockwise when viewed from the objective lens at a rotation rate of 20,0 Hz.

23.2.2 Read power

The optical power incident on the read-out surface of the disk (used for reading the information) shall be 1,0 mW ± 0,1 mW.

23.2.3 Read channels

The drive shall have two read channels. Read Channel 1 gives a signal ($I_1 + I_2$) related to the total amount of light in the exit pupil of the objective lens. Read Channel 2 gives a signal ($I_1 - I_2$) related to the difference in the amount of light in the two halves of the exit pupil of the objective lens. These channels can be implemented as given in clause 9.

For measurement of the push-pull and track cross signals, the read channel signals shall be filtered by a 1st order LPF with a f_c(-3 dB) of 30 kHz.

For measurement of the wobble and AFCM signals, the read channel signals shall be filtered by a 6th order Bessel Low Pass Filter with a f_c(-3 db) of 1,0 MHz.

23.2.4 Tracking

During the measurement of the signals, the axial tracking error between the focus of the optical beam and recording layer shall not exceed

$$e_{max}(\text{axial}) = 0{,}23\ \mu\text{m}$$

and the radial tracking error between the focus of the optical beam and the centre of a track shall not exceed

$$e_{max}(\text{radial}) = 0{,}033\ \mu\text{m}$$

23.3 Definition of signals

All signals are linearly related to currents through a photo detector, and are therefore linearly related to the optical power falling on the detector.

© ISO/IEC 1999 – All rights reserved

Copyright International Organization for Standardization
Provided by IHS under license with ISO
No reproduction or networking permitted without license from IHS
Not for Resale

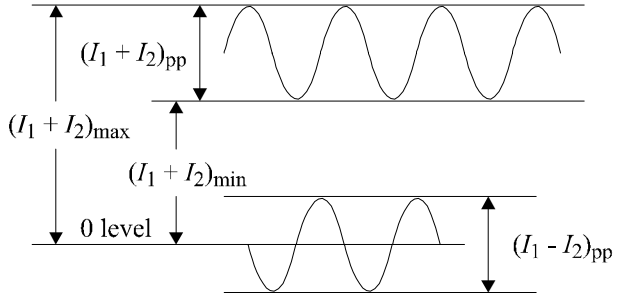

Figure 32 - Signals from grooves in the Read Channels

Push-pull signal

The push-pull signal is the filtered sinusoidal difference signal (I_1 - I_2) in Read Channel 2, when the focus of the optical beam crosses the tracks. The signal can be used by the drive for radial tracking.

Track cross signal

The track cross signal is the filtered sinusoidal sum signal (I_1 + I_2) when the focus of the optical beam crosses the tracks.

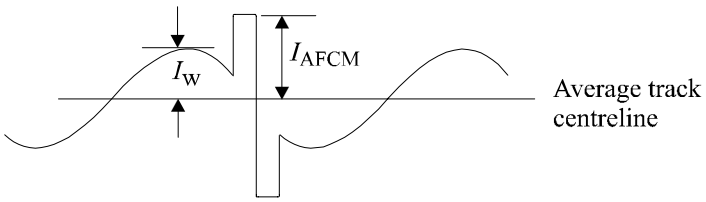

Figure 33 - Wobble and AFCM signal amplitudes in Read Channel 2

Wobble and AFCM signal

The wobble and AFCM signals are the filtered sinusoidal difference signals (I_1 - I_2) in Read Channel 2, while the drive meets the minimum tracking requirement.

24 Characteristics of the groove signals

24.1 Push-pull signal

The peak-to-peak value of the push-pull signal shall meet the following requirements:

a) in grooved areas before recording: $0{,}45 \le \dfrac{(I_1 - I_2)_{pp}}{\left[(I_1 + I_2)_{max} + (I_1 + I_2)_{min}\right] / 2} \le 0{,}80$

b) in grooved areas after recording: $0{,}40 \le \dfrac{(I_1 - I_2)_{pp}}{\left[(I_1 + I_2)_{max} + (I_1 + I_2)_{min}\right] / 2} \le 0{,}80$

c) Ratio of push-pull signal of unrecorded groove to push-pull signal of recorded groove shall be in the range of 0,7 to 1,3.

24.2 Track Cross signal

The Track Cross signal for the unrecorded disk shall meet the following requirement:

$$\frac{(I_1 + I_2)_{pp}}{\left[(I_1 + I_2)_{max} + (I_1 + I_2)_{min}\right] / 2} \ge 0{,}07$$

The $(I_1 + I_2)_{max}$ value shall be generated at the groove centre.

24.3 Phase depth

The phase depth of the groove shall not exceed 90°.

© ISO/IEC 1999 – All rights reserved
Copyright International Organization for Standardization
Provided by IHS under license with ISO
No reproduction or networking permitted without license from IHS
Not for Resale

24.4 Normalized wobble signal

The deviation from the track centreline shall be measured by the normalized wobble signal. The amount of distance that the centre of the wobble groove deviates from the average track centreline can be calculated according to annex L.

The wobble signal shall be measured at locations where the amplitude is not enhanced due to the positive interference of the wobble from adjacent tracks.

The normalized wobble signal shall be

$$0{,}050 \leq \frac{I_{\mathrm{W}}}{\left(I_1 - I_2\right)_{\mathrm{pp}}} \leq 0{,}078$$

24.5 Characteristics of the wobble

The Narrow band SNR of the wobble signal shall be greater than 26 dB. The measurement shall be made using a resolution bandwidth of 3 kHz.

24.6 Characteristics of the Alternating Fine Clock Marks (AFCM)

The signal amplitude of the AFCM shall be ($3{,}5 \times I_{\mathrm{W}}$) < I_{AFCM} < ($7{,}0 \times I_{\mathrm{W}}$)

The period of the AFCM shall be $\frac{1}{5} \times$ (nominal wobble period) $\pm$ 10 %.

The nominal wobble period shall be defined as $\frac{1}{\text{carrier frequency}}$ (see 14.5.1)

Section 6 - Characteristics of the recording layer

25 Method of testing

The format of the embossed and rewritable information on the disk is defined in clause 13. Clause 24 specifies the requirements for the signals from grooves, as obtained when using the Reference Drive.

This clause specifies only the average quality of the embossed and rewritable information. Local deviations from the specified values, called defects, can cause tracking errors or errors in the Data fields. These errors are covered by Section 7.

25.1 Environment

All signals in 25.7.2 to 25.7.7 shall be within their specified ranges with the disk in the test environment conditions defined in 8.1.1.

25.2 Reference Drive

All signals specified in 25.7.2 to 25.7.7 shall be measured in the indicated channels of the Reference Drive. The drive shall have the following characteristics for the purpose of these tests.

25.2.1 Optics and mechanics

The focused optical beam shall have the properties defined in 9.2 a) to i). The disk shall rotate as specified in 9.5.

25.2.2 Read power

The optical power incident on the read-out surface of the disk (used for reading the information) shall be 1,0 mW $\pm$ 0,1 mW.

25.2.3 Read channels

The drive shall have two read channels. Read Channel 1 gives a signal (I_1 + I_2) related to the total amount of light in the exit pupil of the objective lens. Read Channel 2 gives a signal (I_1 - I_2) related to the difference in the amount of light in the two halves of the exit pupil of the objective lens. These channels can be implemented as given in clause 9.

For measurement of the push-pull and track cross signals, the read channel signals shall be filtered by a 1st order LPF with a f_c(-3 dB) of 30 kHz.

The signal from Read channel 1 is not equalized except when measuring jitter. The threshold level for binarizing the read signal shall be controlled to minimize the effects of mark and space size changes due to parameter

© ISO/IEC 1999 – All rights reserved

Copyright International Organization for Standardization
Provided by IHS under license with ISO
No reproduction or networking permitted without license from IHS
Not for Resale

variations during writing. Jitter measurements shall be made using the Read Channel 1with the characteristics in annex C.

25.2.4 Tracking

During the measurement of the signals, the axial tracking error between the focus of the optical beam and recording layer shall not exceed

e_{max}(axial) = 0,23 μm

and the radial tracking error between the focus of the optical beam and the centre of a track shall not exceed

e_{max}(radial) = 0,033 μm

25.2.5 Scanning velocity

All write tests are performed at the minimum and the maximum velocities of the disk defined in 17.4.

The CAV disk shall be tested at 3,02 m/s and 7,35 m/s.

The CLV disk shall be tested at 4,90 m/s and 6,25 m/s.

All read tests are performed at the reference velocity of 4,90 m/s.

25.3 Write conditions for Rewritable area

Marks and spaces are written on the disk by pulsing a laser.

25.3.1 Write pulse waveform

The laser power is modulated according to the write pulse waveform given in figure E.1 of annex E.

A 3T to 14T is written by applying a multiple-pulse train of write pulses.

The write power has three levels: the Peak power (Pp), the Bias1 power (Pb1), and the Bias2 power (Pb2), which are the optical powers incident at the entrance surface of the disk and used for writing marks and spaces. The values of these power levels shall be optimized according to annex G.

25.3.2 Write power

The optimized write powers, Pp, Pb1 and Pb2 shall meet the following conditions

The peak power, Pp, shall be 8,0 mW ≤ Pp ≤ 15,0 mW

The Bias1 power, Pb1, shall be 3,0 mW ≤ Pb1 ≤ 7,0 mW

The Bias2 power, Pb2, shall be 0,0 mW ≤ Pb2 ≤ Pb1

The write powers, Pp, Pb1, and Pb2 shall be within 5 % of their optimum values.

25.3.3 Measurement conditions

The test for jitter shall be carried out on any group of five adjacent tracks, designated (m-2), (m-1), m, (m+1), (m+2), in the Rewritable areas of the disk.

For measurement of jitter the system described in annex C shall be used.

The Jitter shall be measured for each track according to the following procedure:

a) Write random data on all five tracks 10 times each as specified in 25.3.1

b) Read the data of track m under the conditions specified in 25.2.

25.4 Jitter

The jitter for the Embossed and Rewritable areas shall be measured at the reference velocity using the circuit specified in annex C.

The measured jitter of the Embossed area shall not exceed 9 %.

The jitter measurement in the Rewritable area shall be using the conditions specified in 25.3.

The measured jitter in the Rewritable area shall not exceed 9 %.

© ISO/IEC 1999 – All rights reserved
Copyright International Organization for Standardization
Provided by IHS under license with ISO
No reproduction or networking permitted without license from IHS
Not for Resale

25.5 Channel bit length

In the Embossed area, the average Channel bit length shall be

0,176 37 μm ± 0,008 00 μm

In the Rewritable area, the average Channel bit length over each RUB shall be

0,176 37 μm ± 0,000 20 μm

25.6 Phase depth

The phase depth of the embossed pits shall not exceed 90°.

25.7 Definition of signals

All signals are linearly related to currents through a photo-diode detector, and are therefore linearly related to the optical power falling on the detector.

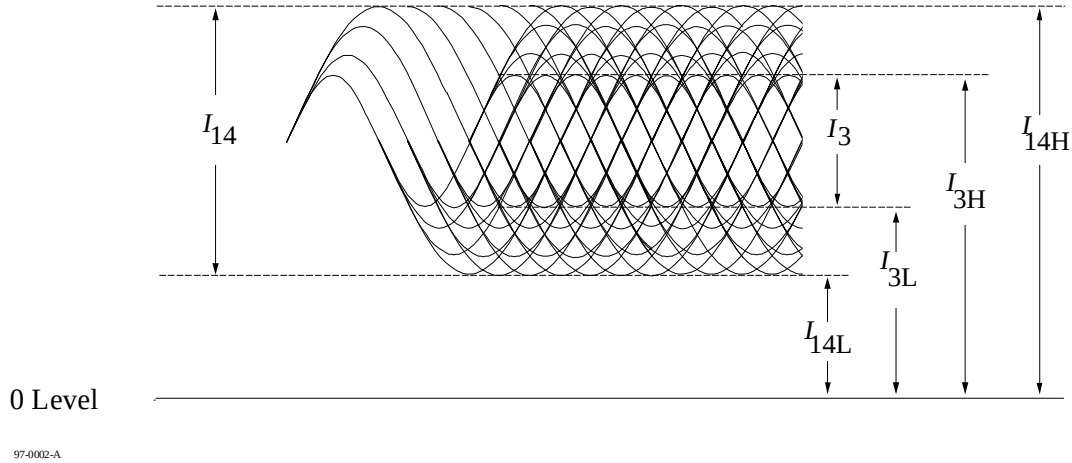

Figure 34 -Signals from lands and pits or spaces and marks in the Read channel

25.7.1 High frequency signals (HF)

The HF signal is obtained by summing the currents of the four elements of the photo detector. These currents are modulated by the effects of the marks and spaces representing the information on the recording layer.

25.7.2 Modulated amplitude

The modulated amplitude I_{14} is the peak-to-peak value generated by the largest mark and space lengths (see figure 34). The peak value I_{14H} shall be the peak value of the HF signal before a.c. coupling. The modulated amplitude I_3 is the peak-to-peak value generated by the shortest mark and space lengths. The 0 Level is the signal level obtained from the measuring device when no disk is inserted. These parameters shall meet the following requirements.

a) In the Embossed areas

$I_{14} / I_{14H} \geq 0{,}35$

$I_3 / I_{14} \geq 0{,}30$

$(I_{14Hmax} - I_{14Hmin}) / I_{14Hmax} \leq 0{,}33$

b) In the Rewritable areas

$I_{14} / I_{14H} \geq 0{,}35$

$I_3 / I_{14} \geq 0{,}30$

Within one disk, $(I_{14Hmax} - I_{14Hmin}) / I_{14Hmax} \leq 0{,}30$

Within one Recording Unit Block, $(I_{14Hmax} - I_{14Hmin}) / I_{14Hmax} \leq 0{,}15$

25.7.3 Reflectivity-modulation product

The reflectivity of the disk multiplied by the I_{14} modulated amplitude shall be

© ISO/IEC 1999 – All rights reserved
51
Copyright International Organization for Standardization
Provided by IHS under license with ISO
No reproduction or networking permitted without license from IHS
Not for Resale

$R_{14H} \times I_{14} / I_{14H} > 5\ \%$ (see 25.7.2 and annex A)

25.7.4 Signal asymmetry

The signal asymmetry shall meet the following requirement, see

a) in the Embossed areas

$$-0{,}05 \le \left[\frac{\frac{I_{14H} + I_{14L}}{2} - \frac{I_{3H} + I_{3L}}{2}}{I_{14}} \right] \le +0{,}15$$

b) in the Rewritable areas

$$-0{,}15 \le \left[\frac{\frac{I_{14H} + I_{14L}}{2} - \frac{I_{3H} + I_{3L}}{2}}{I_{14}} \right] \le +0{,}10$$

25.7.5 Push-pull signal

The push-pull signal is the filtered sinusoidal difference signal (I_1 - I_2) in the tracking channel, when the focus of the optical beam crosses the tracks. The peak-to-peak value of the push-pull signal for the Embossed area shall meet the following requirement:

$$0{,}15 \le \frac{\left(I_1 - I_2\right)_{pp}}{\left[\left(I_1 + I_2\right)_{max} + \left(I_1 + I_2\right)_{min}\right] / 2} \le 0{,}35$$

25.7.6 Track Cross signal

The Track Cross signal is the filtered sinusoidal sum signal (I_1 + I_2) when the focus of the optical beam crosses the tracks. The Track Cross signal for the Embossed area shall meet the following requirement:

$$\frac{\left(I_1 + I_2\right)_{pp}}{\left[\left(I_1 + I_2\right)_{max} + \left(I_1 + I_2\right)_{min}\right] / 2} \ge 0{,}10$$

25.7.7 Differential phase tracking error signal

The output currents of the four quadrants of the split photo detector shown in figure 35 are identified by I_a, I_b, I_c, and I_d.

The differential phase tracking error signal shall be derived from the sum of the phase differences between radial pairs of photo detector elements when the light beam crosses the tracks:

[{Phase (I_d) - Phase (I_a)} + {Phase(I_b) - Phase (I_c)}] , see figure 36 and annex D.

The phase difference signals shall be low-pass filtered with f_c(-3 db) of 30 kHz.

This differential phase tracking error signal shall meet the following requirements (see figure 36):

Amplitude

In the Embossed area:

At the positive 0 crossing $\overline{\Delta t}/T$ shall be in the range 0,5 to 1,1 at 0,10 μm radial offset, where $\overline{\Delta t}$ is the average time difference derived from the sum of the phase differences between radial pairs of photo detector elements, and T is the Channel bit clock period .

In the Rewritable area:

At the positive 0 crossing $\overline{\Delta t}/T$ shall be in the range 0,25 to 0,75 at 0,10 μm radial offset, where $\overline{\Delta t}$ is the average time difference derived from the sum of the phase differences between radial pairs of photo detector elements, and T is the Channel bit clock period .

© ISO/IEC 1999 – All rights reserved
Copyright International Organization for Standardization
Provided by IHS under license with ISO
No reproduction or networking permitted without license from IHS
Not for Resale

Asymmetry (see figure 36)

The asymmetry shall meet the following requirement:

$$\frac{|T_1 - T_2|}{|T_1 + T_2|} \leq 0{,}2$$

where

T_1 is the positive peak value of $\overline{\Delta t}/T$

T_2 is the negative peak value of $\overline{\Delta t}/T$

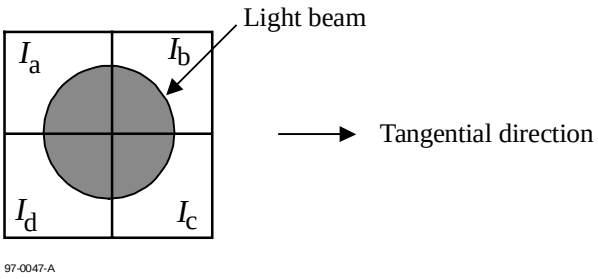

Figure 35 - Quadrant photo detector

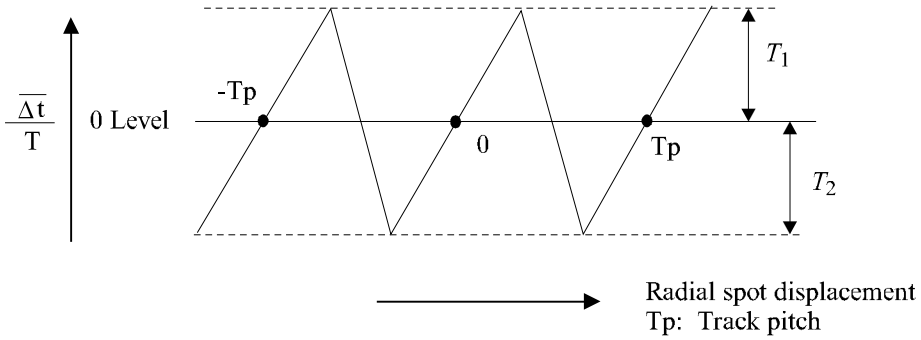

Figure 36 - Differential phase tracking error signal

Section 7 - Characteristics of user data

26 Method of testing

Clauses 27 and 28 describe a series of measurements to test conformance of the user data on the disk with this International Standard. It checks the legibility of both embossed and user-written data. The data is assumed to be arbitrary. The user-written data may have been written by any drive in any operating environment (see 8.1.2). The read tests shall be performed on the Reference Drive.

Whereas clauses 25 disregards defects, clauses 27 and 28 include them as an unavoidable deterioration of the read signals. The gravity of a defect is determined by the correctability of the ensuing errors by the error detection and correction circuit in the read channel defined below. The requirements in clauses 27 and 28 define a minimum quality of the data, necessary for data interchange.

26.1 Environment

All signals in 27.1 to 28.3 shall be within their specified ranges with the disk in any environment in the range of allowed operating environments defined in 8.1.2. It is recommended that before testing the entrance surface of the optical disk shall be cleaned according to the instructions of the manufacturer of the disk.

© ISO/IEC 1999 – All rights reserved

Copyright International Organization for Standardization
Provided by IHS under license with ISO
No reproduction or networking permitted without license from IHS
Not for Resale

26.2 Reference Drive

All signals specified in clauses 27 and 28 shall be measured in the indicated channels of the Reference Drive. The drive shall have the following characteristics for the purpose of these tests:

26.2.1 Optics and mechanics

The focused optical beam shall have the properties already defined in 9.2 a) to i). The disk shall rotate as specified in 9.5.

26.2.2 Read power

The optical power incident on the entrance surface of the disk (used for reading the information) shall be 1,0 mW ± 0,1 mW.

26.2.3 Read channels

The drive shall have two read channels. Read Channel 1 gives a signal ($I_1 + I_2$) related to the total amount of light in the exit pupil of the objective lens. Read Channel 2 gives a signal ($I_1 - I_2$) related to the difference in the amount of light in the two halves of the exit pupil of the objective lens. These channels can be implemented as given in 9.3 and 9.6.

The signal from Read channel 1 is equalized and filtered before processing. The threshold level for binarizing the read signal shall be controlled to minimize the effects of mark and space size changes due to parameter variations during writing. For measurement of the disk quality as specified in clauses 27 and 28, the equalizer, filter and slicer, and the characteristics of the PLL shall be the same as specified in annex C for the jitter measurement.

26.2.4 Error correction

Correction of errors in the data bytes shall be carried out by an error detection and correction system based on the definition in 13.3.

26.2.5 Tracking

During the measurement of the signals, the axial tracking error between the focus of the optical beam and recording layer shall not exceed

$$e_{max}(\text{axial}) = 0{,}23\ \mu\text{m}$$

and the radial tracking error between the focus of the optical beam and the centre of a track shall not exceed

$$e_{max}(\text{radial}) = 0{,}033\ \mu\text{m}$$

27 Minimum quality of a Recording Unit Block

This clause specifies the minimum quality of the data of a Recording Unit Block as required for data interchange. The quality shall be measured on the Reference Drive specified in clause 9 and annex C.

A byte error occurs when one or more bits in a byte have a wrong value, as detected by the ECC and/or EDC circuits.

27.1 User-written data

The user-written data in a Recording Unit Block as read in Read channel 1 shall not contain any byte errors that cannot be corrected by the error correction defined in 13.3, except those RUBs that have been replaced using defect management.

27.2 Embossed data

The embossed data in an ECC Block as read in Read channel 1 shall not contain any byte errors that cannot be corrected by the error correction defined in 13.3.

28 Data interchange requirements

A disk offered for interchange of data shall comply with the following requirements.

28.1 Tracking

The focus of the optical beam shall not jump tracks unintentionally.

28.2 User-written data

Any ECC Block written in the Data Zone that does not comply with 27.1 shall have been replaced according to the rules of the defect management as defined in clause 20.

-`,,```,,,,````-`-`,,`,,`,`,,`---
© ISO/IEC 1999 – All rights reserved
Copyright International Organization for Standardization
Provided by IHS under license with ISO
No reproduction or networking permitted without license from IHS
Not for Resale

28.3 Quality of disk

The quality of the disk is reflected in the number of replaced Recording Unit Blocks in the Data Zone. This International Standard allows a maximum of 4 093 replaced Recording Unit Blocks.

© ISO/IEC 1999 – All rights reserved

Copyright International Organization for Standardization
Provided by IHS under license with ISO
No reproduction or networking permitted without license from IHS
Not for Resale

Annex A

(normative)

Measurement of light reflectivity

A.1 Calibration method

A good reference disk shall be chosen, for instance 0,6 mm glass disk with a golden reflective mirror. This reference disk shall be measured by a parallel beam as shown in figure A.1

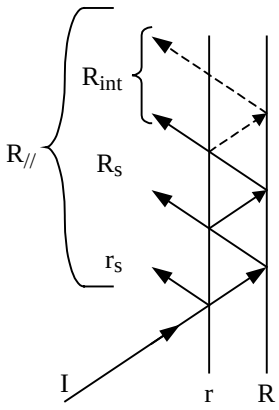

Figure A.1 - Reflectivity calibration

In this figure the following applies.

R = reflectivity of the recording layer (including the double pass substrate transmission)

r = reflectivity of the entrance surface

I = incident beam

r_s = reflectance caused by the reflectivity of the entrance surface

R_s = main reflectance caused by the reflectivity of the recording layer

R_{int} = reflectance caused by the internal reflectances between the entrance surface and the recording layer

$R_{//}$ = measured value ($r_s + R_s + R_{int}$)

The reflectivity of the entrance surface is defined by :

$$r = \left(\frac{n-1}{n+1}\right)^2$$, where n is the index of refraction of the substrate.

The main reflectance $R_s = R_{//} - r_s - R_{int}$ which leads to:

$$R_s = \left[\frac{(1-r)^2 \times (R_{//} - r)}{1 - r \times (2 - R_{//})}\right]$$

The reference disk shall be measured on a reference drive. The total detector current ($I_1 + I_2$) obtained from the reference disk, and measured by the focused beam is equated to R_s as determined above.

Now the arrangement is calibrated and the focused reflectivity is a linear function of the reflectivity of the recording layer and the double pass substrate transmission, independently from the reflectivity of the entrance surface.

© ISO/IEC 1999 – All rights reserved
Copyright International Organization for Standardization
Provided by IHS under license with ISO
No reproduction or networking permitted without license from IHS
Not for Resale

A.2 Measuring method

Reflectivity in the unrecorded Rewritable area

A method of measuring the reflectivity using the reference drive.

1) Measure the total detector current $(I_1 + I_2)_s$ from the reference disk with calibrated reflectivity R_s.
2) Measure the total detector current $(I_1 + I_2)_g$ from a groove track in an area of the disk where the groove track and the two adjacent tracks on each side of the track to be measured have been erased. Erasure of these tracks shall be done by irradiating the tracks using only the Pb1 power as determined from the OPC algorithm (see annex G).
3) Calculate the unrecorded disk reflectivity R_d in the Rewritable area as follows

$$R_d = \frac{(I_1 + I_2)_g}{(I_1 + I_2)_s} \times R_s$$

Reflectivity in the recorded Rewritable area

A method of measuring the reflectivity using the reference drive.

1) Measure the total detector current $(I_1 + I_2)_s$ from the reference disk with calibrated reflectivity R_s.
2) Measure I_{14H} from a recorded groove track in an area of the disk where the two adjacent tracks on each side of the track to be measured have been erased. Erasure of these tracks shall be done by irradiating the tracks using only the Pb1 power as determined from the OPC algorithm (see annex G).
3) Calculate the unrecorded disk reflectivity R_d in the Rewritable area as follows:

$$R_{14H} = \frac{I_{14H}}{(I_1 + I_2)_s} \times R_s$$

Reflectivity in the Embossed area

A method of measuring the reflectivity using the reference drive.

1) Measure the total detector current $(I_1 + I_2)_s$ from the reference disk with calibrated reflectivity R_s.
2) Measure I_{14H} in the Information Zone of the disk.
3) Calculate the reflectivity as follows:

$$R_{14H} = \frac{I_{14H}}{(I_1 + I_2)_s} \times R_s$$

--`,,```,,,,````-`-`,,`,,`,`,,`---

© ISO/IEC 1999 – All rights reserved

Copyright International Organization for Standardization
Provided by IHS under license with ISO
No reproduction or networking permitted without license from IHS
Not for Resale

Annex B

(normative)

Measurement of birefringence

B.1 Principle of the measurement

In order to measure the birefringence, circularly polarized light in a parallel beam is used. The phase retardation is measured by observing the ellipticity of the reflected light.

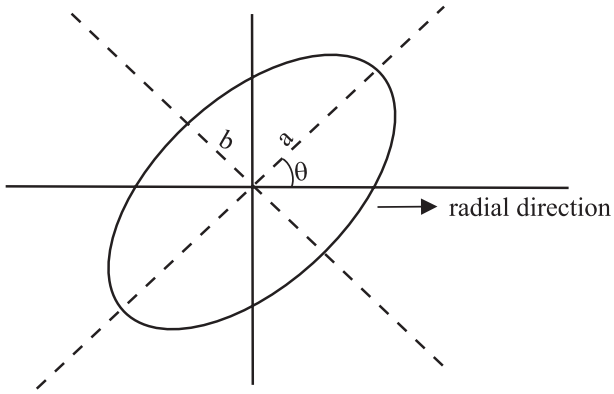

97-0008-A

Figure B.1 - Ellipse with ellipticity *e* = b/a and orientation θ

The orientation θ of the ellipse is determined by the orientation of the optical axis

$$\theta = \gamma - \pi/4 \tag{1}$$

where γ is the angle between the optical axis and the radial direction.

The ellipticity, *e* = b/a, is a function of the phase retardation δ

$$e = \tan\left[\frac{1}{2}\left(\frac{\pi}{2} - \delta\right)\right] \tag{2}$$

When the phase retardation δ is known the birefringence *BR* can be expressed as a fraction of the wavelength

$$BR = \frac{\lambda}{2\pi}\delta \text{ nm} \tag{3}$$

Thus, by observing the elliptically polarized light reflected from the disk, the birefringence can be measured and the orientation of the optical axis can be assessed as well.

© ISO/IEC 1999 – All rights reserved
Copyright International Organization for Standardization
Provided by IHS under license with ISO
No reproduction or networking permitted without license from IHS
Not for Resale

B.2 Measurements conditions

The measurement of the birefringence specified above shall be made under the following conditions.

Mode of measurement in reflection, double pass through the substrate

Wavelength λ of the laser light	640 nm ± 15 nm
Beam diameter (FWHM)	1,0 mm ± 0,2 mm
Angle β of incidence in radial direction relative to the radial plane perpendicular to Reference Plane P	7,0° ± 0,2°
Disk mounting	horizontally
Rotation	less than 1 Hz
Temperature and relative humidity	as specified in 8.1.1

B.3 Example of a measurement set-up

Whilst this International Standard does not prescribe a specific device for measuring birefringence, the device shown schematically in figure B.2 as an example, is well suited for this measurement.

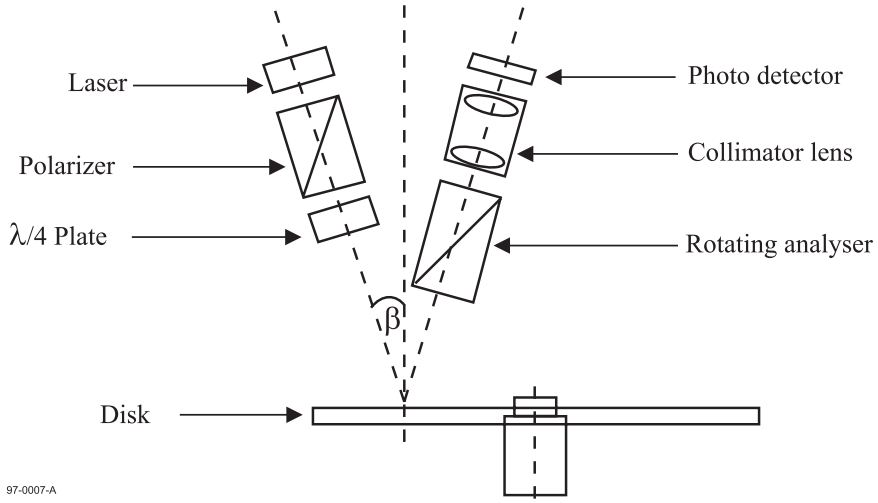

Figure B.2 - Example of a device for the measurement of birefringence

Light from a laser source, collimated into a polarizer (extinction ratio ≈ 10^{-5}), is made circular by a $\lambda/4$ plate. The ellipticity of the reflected light is analyzed by a rotating analyzer and a photo detector. For every location on the disk, the minimum and the maximum values of the intensity are measured. The ellipticity can then be calculated as

$$e^2 = I_{\min} / I_{\max} \qquad (4)$$

Combining equations (2), (3), and (4) yields

$$BR = \frac{\lambda}{4} - \frac{\lambda}{\pi} \arctan \sqrt{\frac{I_{\min}}{I_{\max}}}$$

This device can be easily calibrated as follows

- $I_{\min}$ is set to 0 by measuring a polarizer or a $\lambda/4$ plate,
- $I_{\min} = I_{\max}$ when measuring a mirror

Apart of the d.c. contribution of the front surface reflection, a.c. components may occur, due to the interference of the reflection(s) of the front surface with the reflection(s) from the recording layer. These a.c. reflectivity effects are significant only if the disk substrate has an extremely accurate flatness and if the light source has a high coherence.

© ISO/IEC 1999 – All rights reserved

Copyright International Organization for Standardization
Provided by IHS under license with ISO
No reproduction or networking permitted without license from IHS
Not for Resale

Annex C

(normative)

Measuring conditions for operation signal

C.1 System diagram for jitter measurement and determination of the characteristics of user data

The jitter shall be measured as the standard deviation σ between all data edges and clocks generated by a phase-locked loop as shown in figure C.1 when 8-to-16 modulated codes are recorded.

The general system diagram shall be as shown in figure C.1.

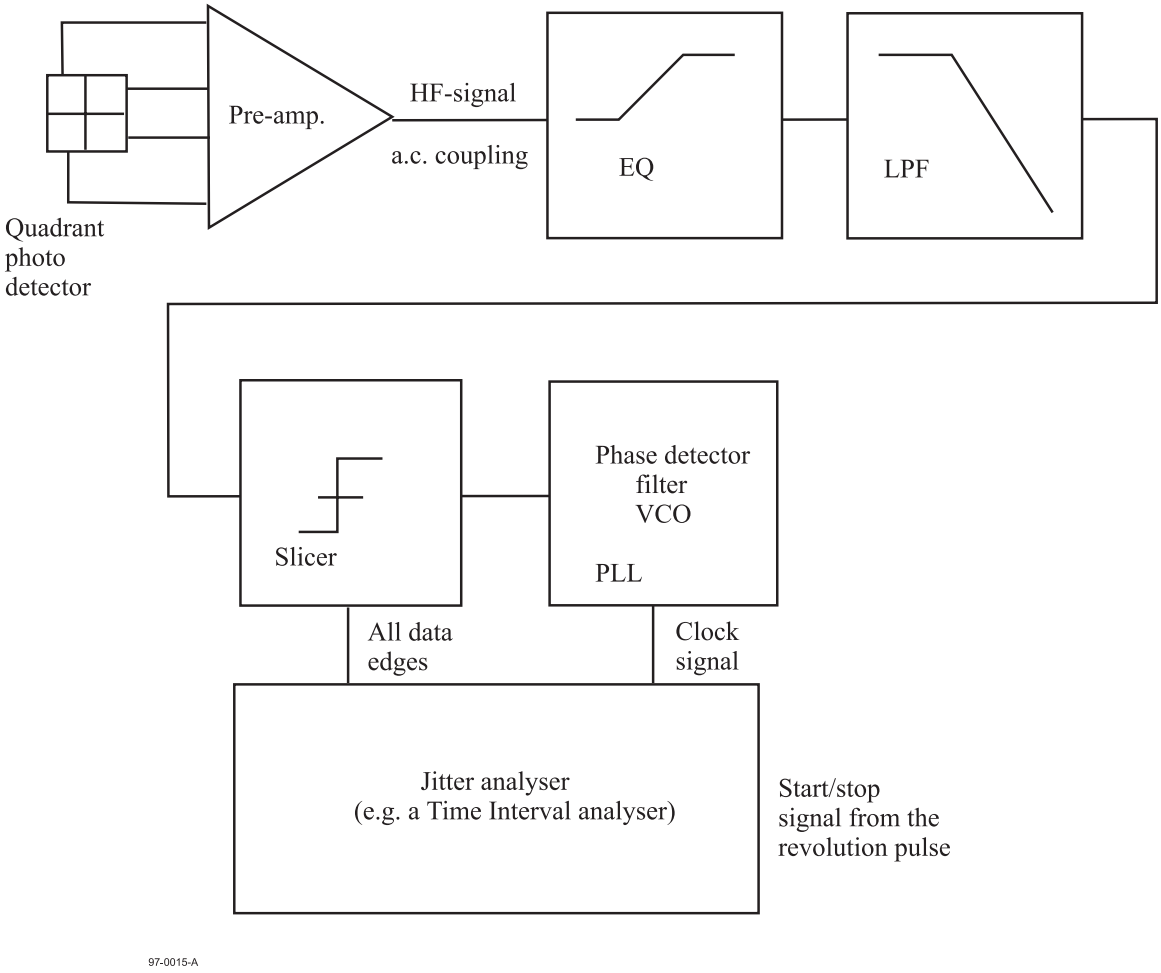

Figure C.1 - General diagram for jitter measurement

© ISO/IEC 1999 – All rights reserved
Copyright International Organization for Standardization
Provided by IHS under license with ISO
No reproduction or networking permitted without license from IHS
Not for Resale

C.2 Open loop transfer function for PLL

The open-loop transfer function for the PLL shall be as shown in figure C.2

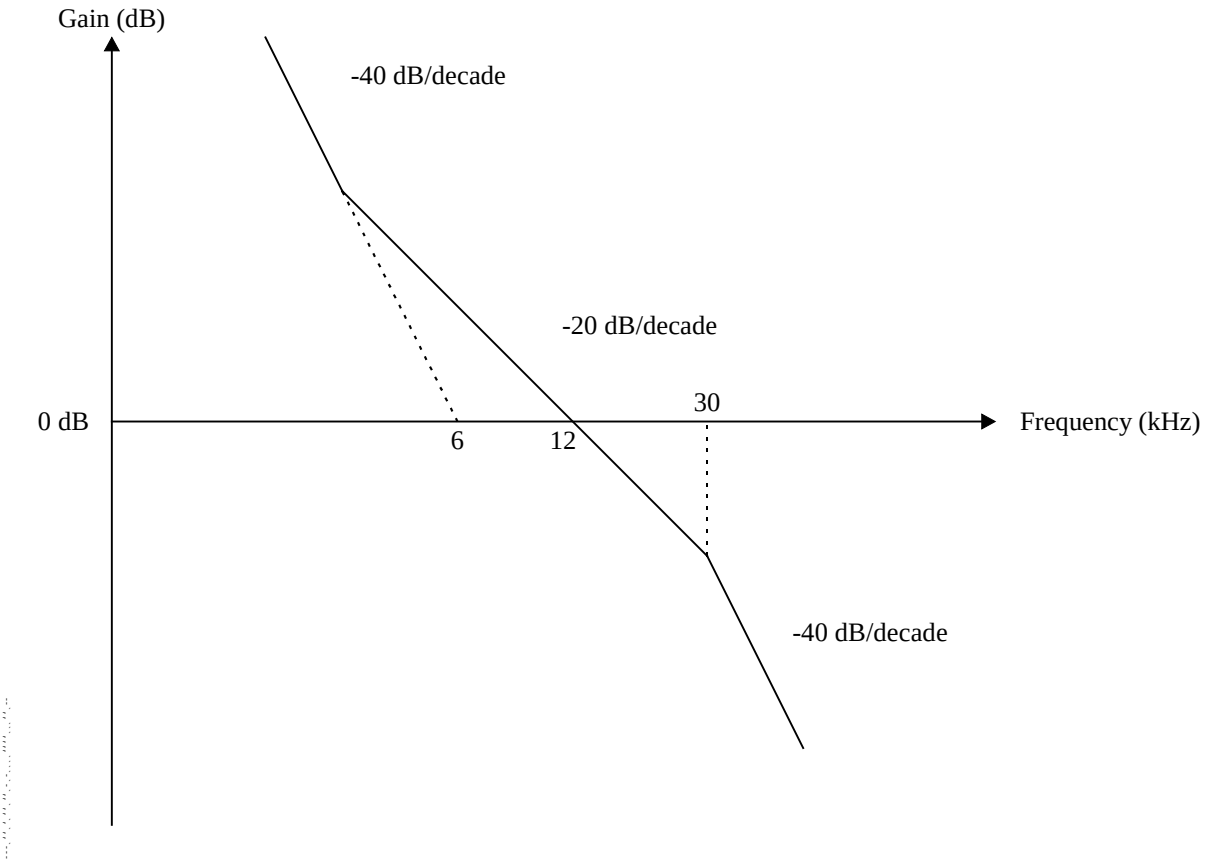

Figure C.2 - Schematic representation of the open-loop transfer function for PLL

C.3 Slicer

The slicer shall be a 1st order, integrating feed-back auto-slicer with a -3 dB closed-loop bandwidth of 5 kHz.

C.4 Conditions for measurement

The bandwidth of the pre-amplifier of the photo detector shall be greater than 20 MHz in order to prevent group-delay distortion.

Equalizer: 3-tap transversal filter with transfer function $H(z) = 1{,}32\ z^{-2} - 0{,}16\ (1 + z^{-4})$

Low-pass filter: 6th order Bessel filter, f_C (-3 dB) = 15 MHz

Filtering and equalization :

- Gain variation : 1 dB max. (below 10 MHz)
- Group delay variation : 1 ns max. (below 10 MHz)
- (Gain at 4,63 MHz - Gain at 0 Hz) = 3,1 dB $\pm$ 0,3 dB

a.c. coupling (high-pass filter) = 1st order, f_C (-3 dB) = 10 kHz

Correction of the angular deviation : only d.c. deviation shall be corrected.

© ISO/IEC 1999 – All rights reserved

Copyright International Organization for Standardization
Provided by IHS under license with ISO
No reproduction or networking permitted without license from IHS
Not for Resale

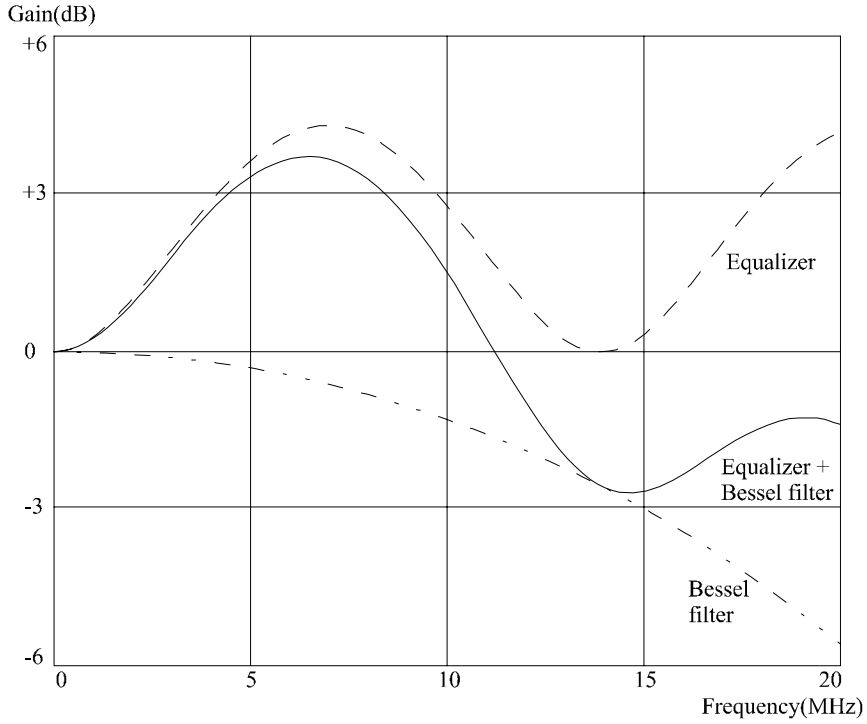

Figure C.3 - Frequency characteristics for the equalizer and the low-pass filter

C.5 Measurement

The jitter of all leading and trailing edges of embossed data over one rotation shall be measured.

The jitter of all leading and trailing edges of information within a Recording Unit Block excluding the additional sync frames added for linking shall be measured.

Under these measurements, the jitter shall not exceed 9,0 % of the Channel bit clock period.

© ISO/IEC 1999 – All rights reserved
Copyright International Organization for Standardization
Provided by IHS under license with ISO
No reproduction or networking permitted without license from IHS
Not for Resale

Annex D

(normative)

Measurement of the differential phase tracking error

D.1 Measuring method for the differential phase tracking error

The reference circuit for the measurement of the tracking error shall be that shown in figure D.1. Each output of the elements of the quadrant photo detector shall be binarized independently after equalization of the waveform with a transfer function defined by:

$$H(i\omega) = (1 + 1{,}6 \times 10^{-7}\, i\omega) / (1 + 4{,}7 \times 10^{-8}\, i\omega)$$

The gain of the comparators shall be sufficient to reach full saturation on the outputs, even with minimum signal amplitudes. Phases of the binarized pulse signal edges D2 and A2, and of the binarized pulse signal edges B2 and C2 shall be compared to each other to produce time-lead signals DA+ and BC+ and time-lag signals DA- and BC-. The phase comparators shall react to each individual edge with signal DA+/DA- or BC+/BC-, depending on the sign of Δt_i. A tracking error signal shall be produced by smoothing the DA+, DA-, BC+ and BC- signals with low-pass filters and by substracting these signals in pairs and then adding the resulting signals by means of unity gain differential amplifiers. The low-pass filters shall be 1st order filters with a f_c(-3 dB) of 30 kHz.

Special attention shall be given to the implementation of the circuit because very small time differences have to be measured, since 1 % of T equals only 0,36 ns. Therefore, careful averaging is needed.

The average time difference between two signals from the 2 radial pairs of elements of the quadrant photo detector shall be

$$\overline{\Delta t} = \frac{1}{N} \sum \Delta t_i$$

where N is the number of edges, both rising and falling.

D.2 Measurement of $\overline{\Delta t}$/T without time interval analyzer

The relative time difference $\overline{\Delta t}$/T is represented by the amplitude of the tracking error signal provided that the amplitudes of the DA+, BC+, DA- and BC- signals and the frequency component of the read-out signals are normalized. The relation between the tracking error amplitude $\overline{\Delta TVE}$ and the time difference is given by

$$\overline{\Delta TVE} = 2 \times \frac{\sum \Delta t_i}{\sum T_i} Vpc = 2 \times \frac{\sum \Delta t_i}{N n T} Vpc = 2 \times \frac{\overline{\Delta t}}{T} \times \frac{Vpc}{n}$$

where

Vpc is the amplitude of the DA+, BC+, DA- and BC- signals

T_i is the actual length of the read-out signal in the range 3T to 14T

nT is the weighted average value of the actual lengths

NnT is the total averaging time

Assuming that Vpc equals ≈ 5 V and that the measured value of n equals ≈ 5, then the above relation between the tracking error amplitude $\overline{\Delta TVE}$ and the time difference $\overline{\Delta t}$ can be simplified to

$$\overline{\Delta TVE} = 2 \times \frac{\overline{\Delta t}}{T}$$

© ISO/IEC 1999 – All rights reserved

Copyright International Organization for Standardization
Provided by IHS under license with ISO
No reproduction or networking permitted without license from IHS
Not for Resale

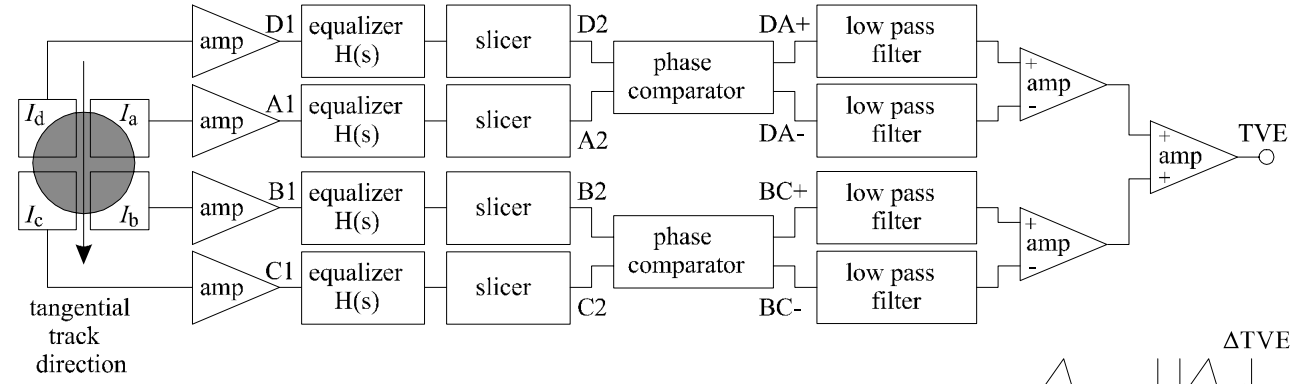

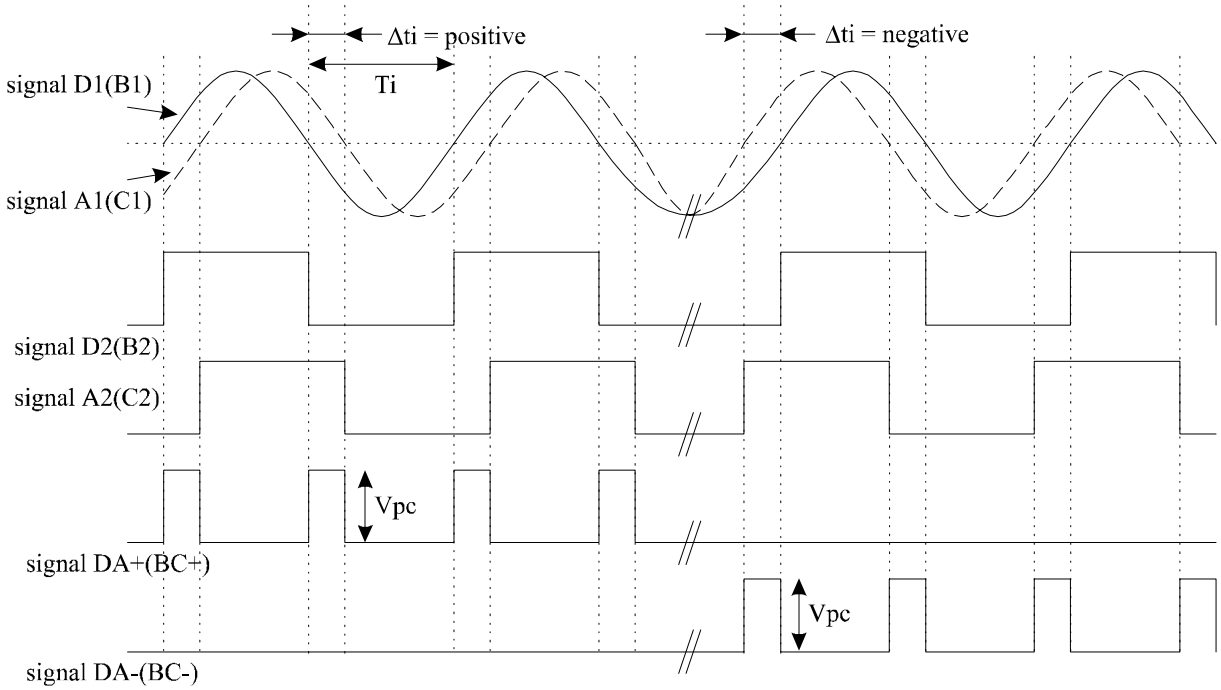

Figure D.1 - Circuit for tracking error measurements

© ISO/IEC 1999 – All rights reserved
Copyright International Organization for Standardization
Provided by IHS under license with ISO
No reproduction or networking permitted without license from IHS
Not for Resale

Annex E

(normative)

The write pulse wave form for testing

The write pulse waveform obtained from the NRZI data and the channel clock is shown in figure E.1. The pulse width time, T_{PW}, is equivalent to a 50% duty cycle of the channel clock, T_W, at a linear speed of 7,35 m/s.

The pulse width time, T_{PW} at all allowed writing velocities shall be

T_{PW} = 12,0 ns ± 0,3 ns

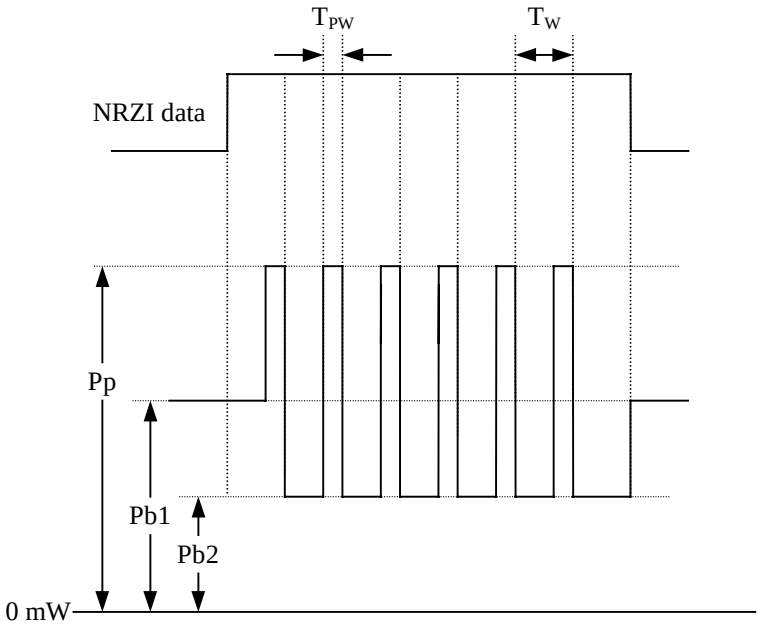

Figure E.1 - Write pulse waveform

The values for Pp, Pb1, and Pb2 are determined according to the OPC algorithm (see annex G). An example of the write pulse waveform for the minimum mark, the minimum space and the maximum mark are shown in figure E.2.

© ISO/IEC 1999 – All rights reserved

Copyright International Organization for Standardization
Provided by IHS under license with ISO
No reproduction or networking permitted without license from IHS
Not for Resale

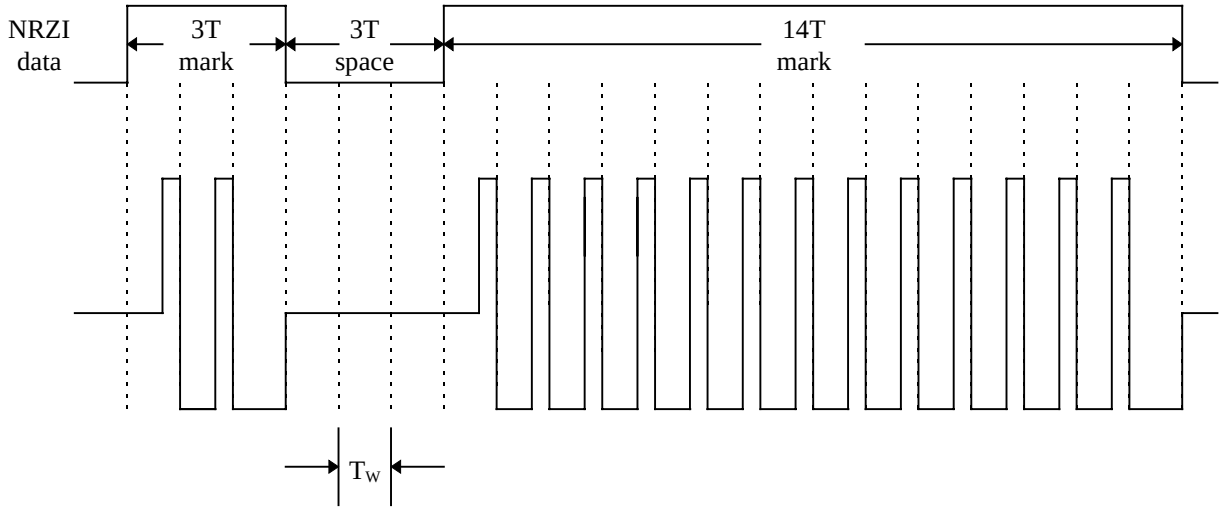

Figure E.2 - Example of a Multiple-pulse

The rise times, T_r, and fall times, T_f, as specified in figure E.3 shall not exceed 3 ns.

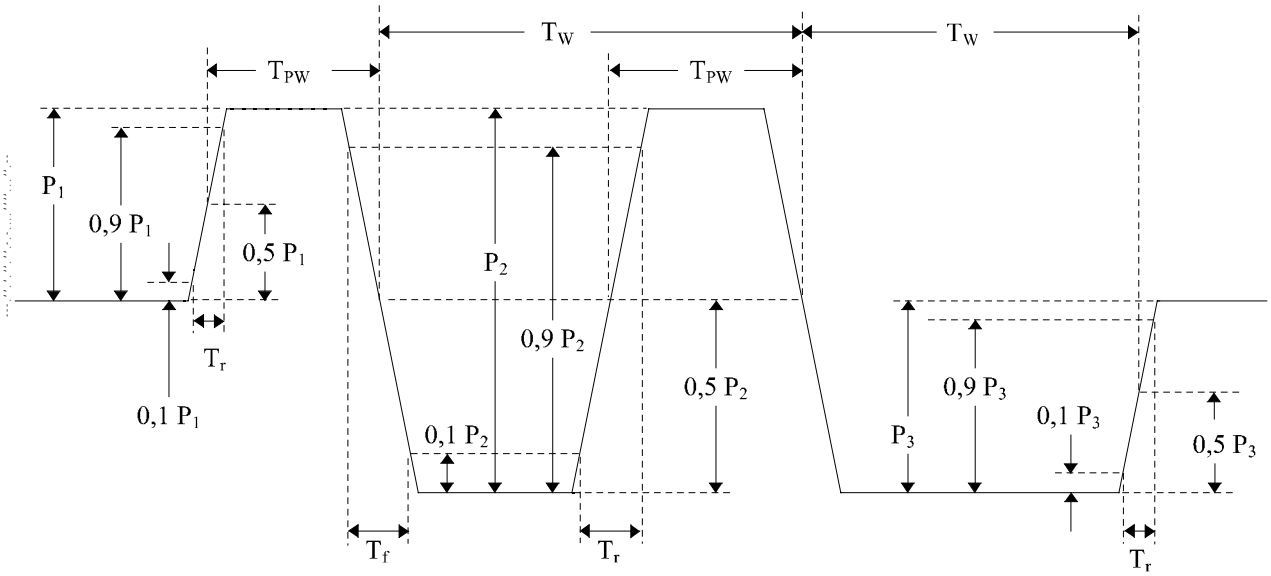

Figure E.3 - Rise Times and Fall Times

© ISO/IEC 1999 – All rights reserved
Copyright International Organization for Standardization
Provided by IHS under license with ISO
No reproduction or networking permitted without license from IHS
Not for Resale

Annex F

(normative)

8-to-16 Modulation

8-to-16 modulation shall satisfy RLL(2,10) requirements. The encoding system is shown in figure F.1 with the conversion tables shown in table F.1 and table F.2.

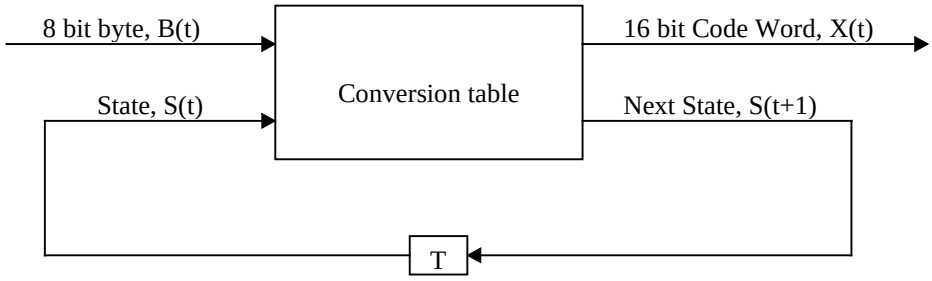

T = Delay of one conversion

Where

$X(t) = H\{B(t), S(t)\}$ $X_{15}(t)$ =msb and $X_0(t)$ = lsb

$S(t+1) = G\{B(t), S(t)\}$

H is the output function from the conversion tables

G is the next-state function from the conversion tables

Figure F.1 - Code Word generating system

The States of the Code Words, X(t), shall be chosen to satisfy the RLL(2,10) requirements of a minimum of 2 ZEROs and a maximum of 10 ZEROs between ONEs of adjacent Code Words.

Code Word X(t)	Next State X(t+1)	Code Word X(t+1)
Ends with 1 or no trailing ZEROs	State 1	Starts with 2 to 9 leading ZEROs
Ends with 2 to 5 trailing ZEROs	State 2	Starts with 2 to 9 leading ZEROs and $X_{15}(t+1) + X_3(t+1) = 0$
Ends with 2 to 5 trailing ZEROs	State 3	Starts with 2 to 9 leading ZEROs and $X_{15}(t+1) + X_3(t+1) > 0$
Ends with 6 to 9 trailing ZEROs	State 4	Starts with 1 or no leading ZEROs

Figure F.2 - Determination of States

Note that when decoding the recorded data, knowledge about the encoder is required to be able to reconstitute the original bytes.

$B(t) = H^{-1}\{X(t), S(t)\}$

© ISO/IEC 1999 – All rights reserved

Copyright International Organization for Standardization
Provided by IHS under license with ISO
No reproduction or networking permitted without license from IHS
Not for Resale

Because of the involved error propagation, such state-dependent decoding is to be avoided. In the case of this 8-to-16 modulation, the conversion tables have been chosen in such a way that knowledge about the State is not required in most cases. As can be gathered from the tables, in some cases, two 8-bit bytes, for instance the 8-bit bytes 5 and 6 in States 1 and 2 in table F.1 generate the same 16-bit Code Words. The construction of the tables allows to solve this apparent ambiguity. Indeed, if two identical Code Words leave a State, one of them goes to State 2 and the other to State 3. Because the setting of bits X_{15} and X_3 is always different in these two States, any Code Word can be uniquely decoded by analysing the Code Word itself together with bits X_{15} and X_3 of the next Code Word :

$B(t) = H^{-1}\{ X(t), X_{15}(t+1), X_3(t+1) \}$

The Substitution table, table F.2, is included to insure meeting the DCC requirements of 13.8.

Table F.1 - Main Conversion Table

8-bit byte	State 1		State 2		State 3		State 4	
	Code Word msb lsb	Next State	Code Word msb lsb	Next State	Code Word msb lsb	Next State	Code Word msb lsb	Next State
0	0010000000001001	1	0100000100100000	2	0010000000001001	1	0100000100100000	2
1	0010000000010010	1	0010000000010010	1	1000000100100000	3	1000000100100000	3
2	0010000100100000	2	0010000100100000	2	1000000000010010	1	1000000000010010	1
3	0010000001001000	2	0100010010000000	4	0010000001001000	2	0100010010000000	4
4	0010000010010000	2	0010000010010000	2	1000000100100000	2	1000000100100000	2
5	0010000000100100	2	0010000000100100	2	1001001000000000	4	1001001000000000	4
6	0010000000100100	3	0010000000100100	3	1000100100000000	4	1000100100000000	4
7	0010000001001000	3	0100000000010010	1	0010000001001000	3	0100000000010010	1
8	0010000010010000	3	0010000010010000	3	1000010010000000	4	1000010010000000	4
9	0010000100100000	3	0010000100100000	3	1001001000000001	1	1001001000000001	1
10	0010010010000000	4	0010010010000000	4	1000100100000001	1	1000100100000001	1
11	0010001001000000	4	0010001001000000	4	1000000010010000	3	1000000010010000	3
12	0010010010000001	1	0010010010000001	1	1000000010010000	2	1000000010010000	2
13	0010001001000001	1	0010001001000001	1	1000010010000001	1	1000010010000001	1
14	0010000001001001	1	0100000000100100	3	0010000001001001	1	0100000000100100	3
15	0010000100100001	1	0010000100100001	1	1000001001000001	1	1000001001000001	1
16	0010000010010001	1	0010000010010001	1	1000000100100001	1	1000000100100001	1
17	0010000000100010	1	0010000000100010	1	1000001001000000	4	1000001001000000	4
18	0001000000001001	1	0100000010010000	2	0001000000001001	1	0100000010010000	2
19	0010000000010001	1	0010000000010001	1	1001000100000000	4	1001000100000000	4
20	0001000000010010	1	0001000000010010	1	1000100010000000	4	1000100010000000	4
21	0000100000000010	1	0000100000000010	1	1000000010010001	1	1000000010010001	1
22	0000010000000001	1	0000010000000001	1	1000000001001001	1	1000000001001001	1
23	0010001000100000	2	0010001000100000	2	1000000001001000	2	1000000001001000	2
24	0010000100010000	2	0010000100010000	2	1000000001001000	3	1000000001001000	3
25	0010000010001000	2	0100000000100100	2	0010000010001000	2	0100000000100100	2
26	0010000001000100	2	0010000001000100	2	1000000000100010	1	1000000000100010	1
27	0001000100100000	2	0001000100100000	2	1000000000010001	1	1000000000010001	1
28	0010000000001000	2	0100000010010000	3	0010000000001000	2	0100000010010000	3
29	0001000010010000	2	0001000010010000	2	1001001000000010	1	1001001000000010	1
30	0001000001001000	2	0100000100100000	3	0001000001001000	2	0100000100100000	3
31	0001000000100100	2	0001000000100100	2	1001000100000001	1	1001000100000001	1
32	0001000000000100	2	0001000000000100	2	1000100100000010	1	1000100100000010	1
33	0001000000000100	3	0001000000000100	3	1000100010000001	1	1000100010000001	1
34	0001000000100100	3	0001000000100100	3	1000000000100100	2	1000000000100100	2
35	0001000001001000	3	0100001001000000	4	0001000001001000	3	0100001001000000	4
36	0001000010010000	3	0001000010010000	3	1000000000100100	3	1000000000100100	3
37	0001000100100000	3	0001000100100000	3	1000010001000000	4	1000010001000000	4
38	0010000000001000	3	0100100100000001	1	0010000000001000	3	0100100100000001	1
39	0010000001000100	3	0010000001000100	3	1001000010000000	4	1001000010000000	4
40	0010000010001000	3	0100010010000001	1	0010000010001000	3	0100010010000001	1
41	0010000100010000	3	0010000100010000	3	1000010010000010	1	1000010010000010	1
42	0010001000100000	3	0010001000100000	3	1000001000100000	2	1000001000100000	2

© ISO/IEC 1999 – All rights reserved
Copyright International Organization for Standardization
Provided by IHS under license with ISO
No reproduction or networking permitted without license from IHS
Not for Resale

8-bit byte	State 1		State 2		State 3		State 4	
	Code Word msb lsb	Next State	Code Word msb lsb	Next State	Code Word msb lsb	Next State	Code Word msb lsb	Next State
43	0010010001000000	4	0010010001000000	4	1000010001000001	1	1000010001000001	1
44	0001001001000000	4	0001001001000000	4	1000001000100000	3	1000001000100000	3
45	0000001000000001	1	0100010001000000	4	1000001001000010	1	0100010001000000	4
46	0010010010000010	1	0010010010000010	1	1000001000100001	1	1000001000100001	1
47	0010000010001001	1	0100001001000001	1	0010000010001001	1	0100001001000001	1
48	0010010001000001	1	0010010001000001	1	1000000100010000	2	1000000100010000	2
49	0010001001000010	1	0010001001000010	1	1000000010001000	2	1000000010001000	2
50	0010001000100001	1	0010001000100001	1	1000000100010000	3	1000000100010000	3
51	0001000001001001	1	0100000100100001	1	0001000001001001	1	0100000100100001	1
52	0010000100100010	1	0010000100100010	1	1000000100100010	1	1000000100100010	1
53	0010000100010001	1	0010000100010001	1	1000000100010001	1	1000000100010001	1
54	0010000010010010	1	0010000010010010	1	1000000010010010	1	1000000010010010	1
55	0010000001000010	1	0010000001000010	1	1000000010001001	1	1000000010001001	1
56	0010000000100001	1	0010000000100001	1	1000000001000010	1	1000000001000010	1
57	0000100000001001	1	0100000010010001	1	0000100000001001	1	0100000010010001	1
58	0001001001000001	1	0001001001000001	1	1000000000100001	1	1000000000100001	1
59	0001000100100001	1	0001000100100001	1	0100000001001001	1	0100000001001001	1
60	0001000010010001	1	0001000010010001	1	1001001000010010	1	1001001000010010	1
61	0001000000100010	1	0001000000100010	1	1001001000001001	1	1001001000001001	1
62	0001000000010001	1	0001000000010001	1	1001000100000010	1	1001000100000010	1
63	0000100000010010	1	0000100000010010	1	1000000001000100	2	1000000001000100	2
64	0000010000000010	1	0000010000000010	1	0100000001001000	2	0100000001001000	2
65	0010010000100000	2	0010010000100000	2	1000010000100000	2	1000010000100000	2
66	0010001000010000	2	0010001000010000	2	1000001000010000	2	1000001000010000	2
67	0010000100001000	2	0100000000100010	1	0010000100001000	2	0100000000100010	1
68	0010000010000100	2	0010000010000100	2	1000000100001000	2	1000000100001000	2
69	0010000000010000	2	0010000000010000	2	1000000010000100	2	1000000010000100	2
70	0001000010001000	2	0100001000100000	2	0001000010001000	2	0100001000100000	2
71	0001001000100000	2	0001001000100000	2	0100000010001000	2	0100000010001000	2
72	0001000000001000	2	0100000100010000	2	0001000000001000	2	0100000100010000	2
73	0001000100010000	2	0001000100010000	2	1000000001000100	3	1000000001000100	3
74	0001000001000100	2	0001000001000100	2	0100000001001000	3	0100000001001000	3
75	0000100100100000	2	0000100100100000	2	1000010000100000	3	1000010000100000	3
76	0000100010010000	2	0000100010010000	2	1000001000010000	3	1000001000010000	3
77	0000100001001000	2	0100000001000100	2	0000100001001000	2	0100000001000100	2
78	0000100000100100	2	0000100000100100	2	1000000100001000	3	1000000100001000	3
79	0000100000000100	2	0000100000000100	2	1000000010000100	3	1000000010000100	3
80	0000100000000100	3	0000100000000100	3	0100000010001000	3	0100000010001000	3
81	0000100000100100	3	0000100000100100	3	1000100001000000	4	1000100001000000	4
82	0000100001001000	3	0100000001000100	3	0000100001001000	3	0100000001000100	3
83	0000100010010000	3	0000100010010000	3	1000000010001000	3	1000000010001000	3
84	0000100100100000	3	0000100100100000	3	1001001001001000	2	1001001001001000	2
85	0001000000001000	3	0100000100010000	3	0001000000001000	3	0100000100010000	3
86	0001000001000100	3	0001000001000100	3	1001001000100100	2	1001001000100100	2
87	0001000010001000	3	0100001000100000	3	0001000010001000	3	0100001000100000	3
88	0001000100010000	3	0001000100010000	3	1001001001001000	3	1001001001001000	3
89	0001001000100000	3	0001001000100000	3	1001000010000001	1	1001000010000001	1
90	0010000000010000	3	0010000000010000	3	1000100100010010	1	1000100100010010	1
91	0010000010000100	3	0010000010000100	3	1000100100001001	1	1000100100001001	1
92	0010000100001000	3	0100000000010001	1	0010000100001000	3	0100000000010001	1
93	0010001000010000	3	0010001000010000	3	1000100010000010	1	1000100010000010	1
94	0010010000100000	3	0010010000100000	3	1000100001000001	1	1000100001000001	1
95	0000001000000010	1	0100100100000010	1	1000010010010010	1	0100100100000010	1
96	0000000100000001	1	0100100010000001	1	1000010010001001	1	0100100010000001	1
97	0010010010001001	1	0100010000100000	2	0010010010001001	1	0100010000100000	2
98	0010010010010010	1	0010010010010010	1	1001001000000100	2	1001001000000100	2
99	0010010001000010	1	0010010001000010	1	1001001000100100	3	1001001000100100	3
100	0010010000100001	1	0010010000100001	1	1000010001000010	1	1000010001000010	1

--`,,```,,,,````-`-`,,`,,`,`,,`---

© ISO/IEC 1999 – All rights reserved

Copyright International Organization for Standardization
Provided by IHS under license with ISO
No reproduction or networking permitted without license from IHS
Not for Resale

8-bit byte	State 1		State 2		State 3		State 4	
	Code Word msb lsb	Next State	Code Word msb lsb	Next State	Code Word msb lsb	Next State	Code Word msb lsb	Next State
101	0010001001001001	1	0100010010000010	1	0010001001001001	1	0100010010000010	1
102	0010001000100010	1	0010001000100010	1	1000010000100001	1	1000010000100001	1
103	0010001000010001	1	0010001000010001	1	1000001001001001	1	1000001001001001	1
104	0010000100010010	1	0010000100010010	1	1000001000100010	1	1000001000100010	1
105	0010000010000010	1	0010000010000010	1	1000001000010001	1	1000001000010001	1
106	0010000100001001	1	0100001000010000	2	0010000100001001	1	0100001000010000	2
107	0010000001000001	1	0010000001000001	1	1000000100010010	1	1000000100010010	1
108	0001001001000010	1	0001001001000010	1	1000000100001001	1	1000000100001001	1
109	0001001000100001	1	0001001000100001	1	1000000010000010	1	1000000010000010	1
110	0001000100100010	1	0001000100100010	1	1000000001000001	1	1000000001000001	1
111	0001000100010001	1	0001000100010001	1	0100000010001001	1	0100000010001001	1
112	0001000010010010	1	0001000010010010	1	1001001001001001	1	1001001001001001	1
113	0001000001000010	1	0001000001000010	1	1001001000100010	1	1001001000100010	1
114	0001000010001001	1	0100010000100000	3	0001000010001001	1	0100010000100000	3
115	0001000000100001	1	0001000000100001	1	1001001000010001	1	1001001000010001	1
116	0000100100100001	1	0000100100100001	1	1001000100010010	1	1001000100010010	1
117	0000100010010001	1	0000100010010001	1	1001000100001001	1	1001000100001001	1
118	0000100001001001	1	0100010001000001	1	0000100001001001	1	0100010001000001	1
119	0000100000100010	1	0000100000100010	1	1000100100100100	2	1000100100100100	2
120	0000100000010001	1	0000100000010001	1	1000100100000100	2	1000100100000100	2
121	0000010000001001	1	0100001001000010	1	0000010000001001	1	0100001001000010	1
122	0000010000010010	1	0000010000010010	1	1000100000100000	2	1000100000100000	2
123	0010010010000100	2	0010010010000100	2	1000010010000100	2	1000010010000100	2
124	0010010000010000	2	0010010000010000	2	1000010000010000	2	1000010000010000	2
125	0010001000001000	2	0100001000100001	1	0010001000001000	2	0100001000100001	1
126	0010001001000100	2	0010001001000100	2	1000001001000100	2	1000001001000100	2
127	0001000100001000	2	0100000100100010	1	0001000100001000	2	0100000100100010	1
128	0010000100100100	2	0010000100100100	2	1000001000001000	2	1000001000001000	2
129	0000100010001000	2	0100000100010001	1	0000100010001000	2	0100000100010001	1
130	0010000100000100	2	0010000100000100	2	1000000100100100	2	1000000100100100	2
131	0010000000100000	2	0010000000100000	2	1001001000000100	3	1001001000000100	3
132	0001001000010000	2	0001001000010000	2	1000100100100100	3	1000100100100100	3
133	0000100000001000	2	0100000010010010	1	0000100000001000	2	0100000010010010	1
134	0001000010000100	2	0001000010000100	2	1000100000100000	3	1000100000100000	3
135	0001000000010000	2	0001000000010000	2	1000010010000100	3	1000010010000100	3
136	0000100100010000	2	0000100100010000	2	1000010000010000	3	1000010000010000	3
137	0000100001000100	2	0000100001000100	2	1000001001000100	3	1000001001000100	3
138	0000010001001000	2	0100000001000010	1	0000010001001000	2	0100000001000010	1
139	0000010010010000	2	0000010010010000	2	1000001000001000	3	1000001000001000	3
140	0000010000100100	2	0000010000100100	2	1001000010000010	1	1001000010000010	1
141	0000010000000100	2	0000010000000100	2	1000000100000100	2	1000000100000100	2
142	0000010000000100	3	0000010000000100	3	1000000100100100	3	1000000100100100	3
143	0000010000100100	3	0000010000100100	3	1000000100000100	3	1000000100000100	3
144	0000010001001000	3	0100000010000100	2	0000010001001000	3	0100000010000100	2
145	0000010010010000	3	0000010010010000	3	1001000001000000	4	1001000001000000	4
146	0000100000001000	3	0100000000010000	2	0000100000001000	3	0100000000010000	2
147	0000100001000100	3	0000100001000100	3	1000000000100000	2	1000000000100000	2
148	0000100010001000	3	0100000010000100	3	0000100010001000	3	0100000010000100	3
149	0000100100010000	3	0000100100010000	3	1000000000100000	3	1000000000100000	3
150	0001000000010000	3	0001000000010000	3	0100000100001000	3	0100000100001000	3
151	0001000010000100	3	0001000010000100	3	1000000001000000	4	1000000001000000	4
152	0001000100001000	3	0100001000010000	3	0001000100001000	3	0100001000010000	3
153	0001001000010000	3	0001001000010000	3	1001000001000001	1	1001000001000001	1
154	0010000000100000	3	0010000000100000	3	0100000100001000	2	0100000100001000	2
155	0010000100000100	3	0010000100000100	3	1001000100100100	3	1001000100100100	3
156	0010000100100100	3	0010000100100100	3	1000100100100010	1	1000100100100010	1
157	0010001000001000	3	0100000000100001	1	0010001000001000	3	0100000000100001	1
158	0010001001000100	3	0010001001000100	3	1000100100000100	3	0100100100000000	4

Copyright International Organization for Standardization
Provided by IHS under license with ISO
No reproduction or networking permitted without license from IHS
Not for Resale
© ISO/IEC 1999 – All rights reserved

8-bit byte	State 1		State 2		State 3		State 4	
	Code Word msb lsb	Next State	Code Word msb lsb	Next State	Code Word msb lsb	Next State	Code Word msb lsb	Next State
159	0010010000010000	3	0010010000010000	3	1001001001000100	2	1001001001000100	2
160	0010010010000100	3	0010010010000100	3	1001001000001000	2	1001001000001000	2
161	0000001000010010	1	0100000000010000	3	1000100100010001	1	0100000000010000	3
162	0000001000001001	1	0100100100100100	2	1000100010010010	1	0100100100100100	2
163	0000000100000010	1	0100100100100100	3	1000100010001001	1	0100100100100100	3
164	0000000010000001	1	0100100100010010	1	1000100001000010	1	0100100100010010	1
165	0010010010010001	1	0010010010010001	1	1001000100100100	2	1001000100100100	2
166	0010010000100010	1	0010010000100010	1	1001000100000100	2	1001000100000100	2
167	0010010001001001	1	0100100100000100	2	0010010001001001	1	0100100100000100	2
168	0010010000010001	1	0010010000010001	1	1001001001000100	3	1001001001000100	3
169	0010001000010010	1	0010001000010010	1	1000100000100001	1	1000100000100001	1
170	0010000100000010	1	0010000100000010	1	1000010010010001	1	1000010010010001	1
171	0010001000001001	1	0100100000100000	3	0010001000001001	1	0100100000100000	3
172	0010000010000001	1	0010000010000001	1	1000010001001001	1	1000010001001001	1
173	0001001000100010	1	0001001000100010	1	1000010000100010	1	1000010000100010	1
174	0001001000010001	1	0001001000010001	1	1000010000010001	1	1000010000010001	1
175	0001000100010010	1	0001000100010010	1	1000001000010010	1	1000001000010010	1
176	0001000010000010	1	0001000010000010	1	1000001000001001	1	1000001000001001	1
177	0001001001001001	1	0100100010000010	1	0001001001001001	1	0100100010000010	1
178	0001000001000001	1	0001000001000001	1	1000000100000010	1	1000000100000010	1
179	0000100100100010	1	0000100100100010	1	1000000010000001	1	1000000010000001	1
180	0000100100010001	1	0000100100010001	1	0100100100001001	1	0100100100001001	1
181	0001000100001001	1	0100100000100000	2	0001000100001001	1	0100100000100000	2
182	0000100010010010	1	0000100010010010	1	0100010010001001	1	0100010010001001	1
183	0000100001000010	1	0000100001000010	1	0100001001001001	1	0100001001001001	1
184	0000100010001001	1	0100010010000100	3	0000100010001001	1	0100010010000100	3
185	0000100000100001	1	0000100000100001	1	1001000000100000	2	1001000000100000	2
186	0000010010010001	1	0000010010010001	1	1000100100001000	2	1000100100001000	2
187	0000010000100010	1	0000010000100010	1	1000100010000100	2	1000100010000100	2
188	0000010001001001	1	0100100001000001	1	0000010001001001	1	0100100001000001	1
189	0000010000010001	1	0000010000010001	1	1000100000010000	2	1000100000010000	2
190	0000001001001000	2	0100010010000100	2	1000010010001000	2	0100010010000100	2
191	0000001000100100	2	0100010000010000	2	1000010001000100	2	0100010000010000	2
192	0000001000000100	2	0100001001000100	2	1000010000001000	2	0100001001000100	2
193	0010010010001000	2	0100010000010000	3	0010010010001000	2	0100010000010000	3
194	0010010001000100	2	0010010001000100	2	1000001001001000	2	1000001001001000	2
195	0010010000001000	2	0100010010010010	1	0010010000001000	2	0100010010010010	1
196	0010001000100100	2	0010001000100100	2	1000001000100100	2	1000001000100100	2
197	0010001000000100	2	0010001000000100	2	1000001000000100	2	1000001000000100	2
198	0010001001001000	2	0100010001000010	1	0010001001001000	2	0100010001000010	1
199	0001001001000100	2	0001001001000100	2	0100001000001000	2	0100001000001000	2
200	0001000100100100	2	0001000100100100	2	1001000000100000	3	1001000000100000	3
201	0001000100000100	2	0001000100000100	2	1000100100001000	3	1000100100001000	3
202	0001001000001000	2	0100010000100001	1	0001001000001000	2	0100010000100001	1
203	0001000000100000	2	0001000000100000	2	1000100010000100	3	1000100010000100	3
204	0000100010000100	2	0000100010000100	2	1000010010001000	3	1000010010001000	3
205	0000100000010000	2	0000100000010000	2	1000010001000100	3	1000010001000100	3
206	0000100100001000	2	0100001000100010	1	0000100100001000	2	0100001000100010	1
207	0000010010001000	2	0100001000010001	1	0000010010001000	2	0100001000010001	1
208	0000010001000100	2	0000010001000100	2	1000001000100100	3	1000001000100100	3
209	0000010000001000	2	0100000100010010	1	0000010000001000	2	0100000100010010	1
210	0000001000000100	3	0100000010000010	1	1000010000001000	3	0100000010000010	1
211	0000001000100100	3	0100000100100100	2	1000001001001000	3	0100000100100100	2
212	0000001001001000	3	0100000100000100	2	1000001000000100	3	0100000100000100	2
213	0000010000001000	3	0100000001000001	1	0000010000001000	3	0100000001000001	1
214	0000010001000100	3	0000010001000100	3	0100001000001000	3	0100001000001000	3
215	0000010010001000	3	0100000000100000	2	0000010010001000	3	0100000000100000	2
216	0000100000010000	3	0000100000010000	3	1001001000010000	3	1001001000010000	3

--`,,```,,,,````-`-`,,`,,`,`,,`---

© ISO/IEC 1999 – All rights reserved

Copyright International Organization for Standardization
Provided by IHS under license with ISO
No reproduction or networking permitted without license from IHS
Not for Resale

8-bit byte	State 1		State 2		State 3		State 4	
	Code Word msb lsb	Next State	Code Word msb lsb	Next State	Code Word msb lsb	Next State	Code Word msb lsb	Next State
217	0000100010000100	3	0000100010000100	3	1001000100000100	3	1001000100000100	3
218	0000100100001000	3	0100000100000100	3	0000100100001000	3	0100000100000100	3
219	0001000000100000	3	0001000000100000	3	0100000100001001	1	0100000100001001	1
220	0001000100000100	3	0001000100000100	3	1001001000010000	2	1001001000010000	2
221	0001000100100100	3	0001000100100100	3	1001000100001000	2	1001000100001000	2
222	0001001000001000	3	0100000100100100	3	0001001000001000	3	0100000100100100	3
223	0001001001000100	3	0001001001000100	3	1001001000001000	3	1001001000001000	3
224	0010001000000100	3	0010001000000100	3	1000100000010000	3	1000100000010000	3
225	0010001000100100	3	0010001000100100	3	1001001001000010	1	1001001001000010	1
226	0010001001001000	3	0100001001000100	3	0010001001001000	3	0100001001000100	3
227	0010010000001000	3	0100100100000100	3	0010010000001000	3	0100100100000100	3
228	0010010001000100	3	0010010001000100	3	1001000100001000	3	1001000100001000	3
229	0010010010001000	3	0100000000100000	3	0010010010001000	3	0100000000100000	3
230	0010000001000000	4	0010000001000000	4	1001001000100001	1	1001001000100001	1
231	0000001001001001	1	0100100100100010	1	1001000100100010	1	0100100100100010	1
232	0000001000100010	1	0100100010000100	2	1001000100010001	1	0100100010000100	2
233	0000001000010001	1	0100100000010000	2	1001000010010010	1	0100100000010000	2
234	0000000100010010	1	0100000001000000	4	1001000010001001	1	0100000001000000	4
235	0000000100001001	1	0100100100010001	1	1001000001000010	1	0100100100010001	1
236	0000000010000010	1	0100100010010010	1	1001000000100001	1	0100100010010010	1
237	0000000001000001	1	0100100001000010	1	1000100100100001	1	0100100001000010	1
238	0010010000010010	1	0010010000010010	1	1000100010010001	1	1000100010010001	1
239	0010001000000010	1	0010001000000010	1	1001000010000100	3	1001000010000100	3
240	0010010000001001	1	0100100010000100	3	0010010000001001	1	0100100010000100	3
241	0010000100000001	1	0010000100000001	1	1001000010000100	2	1001000010000100	2
242	0001001000010010	1	0001001000010010	1	1000000010000000	4	1000000010000000	4
243	0001000100000010	1	0001000100000010	1	1000100001001001	1	1000100001001001	1
244	0001001000001001	1	0100100000100001	1	0001001000001001	1	0100100000100001	1
245	0001000010000001	1	0001000010000001	1	1000100000100010	1	1000100000100010	1
246	0000100100010010	1	0000100100010010	1	1000100000010001	1	1000100000010001	1
247	0000100010000010	1	0000100010000010	1	1000010000010010	1	1000010000010010	1
248	0000100100001001	1	0100010010010001	1	0000100100001001	1	0100010010010001	1
249	0000100001000001	1	0000100001000001	1	1000010000001001	1	1000010000001001	1
250	0000010010010010	1	0000010010010010	1	1000001000000010	1	1000001000000010	1
251	0000010001000010	1	0000010001000010	1	1000000100000001	1	1000000100000001	1
252	0000010010001001	1	0100010000100010	1	0000010010001001	1	0100010000100010	1
253	0000010000100001	1	0000010000100001	1	0100100010001001	1	0100100010001001	1
254	0000001001000100	2	0100010000010001	1	1001000000010000	2	0100010000010001	1
255	0000001000001000	2	0100001000010010	1	1000100100010000	2	0100001000010010	1

--`,,```,,,,````-`-`,,`,,`,`,,`---

© ISO/IEC 1999 – All rights reserved

Copyright International Organization for Standardization
Provided by IHS under license with ISO
No reproduction or networking permitted without license from IHS

Not for Resale

Table F.2 - Substitution Conversion Table

8-bit byte	State 1		State 2		State 3		State 4	
	Code Word msb lsb	Next State	Code Word msb lsb	Next State	Code Word msb lsb	Next State	Code Word msb lsb	Next State
0	0000010010000000	4	0000010010000000	4	0100100001001000	2	0100100001001000	2
1	0000100100000000	4	0000100100000000	4	0100100001001000	3	0100100001001000	3
2	0001001000000000	4	0001001000000000	4	0100100000001001	1	0100100000001001	1
3	0000001001000000	4	0100010000000001	1	1000001000000000	4	0100010000000001	1
4	0000000100100000	3	0100100000000010	1	1001000000000100	3	0100100000000010	1
5	0000000010010000	3	0100001000000000	4	1001000000100100	3	0100001000000000	4
6	0000000001001000	3	0100100000000100	2	1001000001001000	3	0100100000000100	2
7	0000000001001000	2	0100000100000000	4	1001000000000100	2	0100000100000000	4
8	0000000010010000	2	0100100010010000	3	1001000000100100	2	0100100010010000	3
9	0000000100100000	2	0100100000100100	2	1001000001001000	2	0100100000100100	2
10	0000010001000000	4	0000010001000000	4	1001001001000000	4	1001001001000000	4
11	0000100010000000	4	0000100010000000	4	1000100001001000	3	1000100001001000	3
12	0001000100000000	4	0001000100000000	4	0100010001001000	3	0100010001001000	3
13	0010001000000000	4	0010001000000000	4	1000100000000100	3	1000100000000100	3
14	0000001000100000	3	0100100000000100	3	1001000010010000	3	0100100000000100	3
15	0000000100010000	3	0100100010010000	2	1001000100100000	3	0100100010010000	2
16	0000000010001000	3	0100001000000001	1	0100100000001000	3	0100001000000001	1
17	0000000001000100	3	0100010000000010	1	0100100010001000	3	0100010000000010	1
18	0000000001000100	2	0100100000100100	3	1001000010010000	2	0100100000100100	3
19	0000000010001000	2	0100100100100000	3	1001000100100000	2	0100100100100000	3
20	0000000100010000	2	0100100100100000	2	0100010001001000	2	0100100100100000	2
21	0000001000100000	2	0100100000010010	1	0100100000001000	2	0100100000010010	1
22	0000010010000001	1	0000010010000001	1	1000100000100100	3	1000100000100100	3
23	0000100100000001	1	0000100100000001	1	1000100010010000	3	1000100010010000	3
24	0001001000000001	1	0001001000000001	1	0100100010001000	2	0100100010001000	2
25	0010010000000001	1	0010010000000001	1	1000100000000100	2	1000100000000100	2
26	0000000001001001	1	0100010000000100	3	1000010000000001	1	0100010000000100	3
27	0000000010010001	1	0100000100000001	1	1000100000000010	1	0100000100000001	1
28	0000000100100001	1	0100010000000100	2	1001000000001001	1	0100010000000100	2
29	0000001001000001	1	0100001000000010	1	1001000000010010	1	0100001000000010	1
30	0000100001000000	4	0000100001000000	4	1000100000100100	2	1000100000100100	2
31	0001000010000000	4	0001000010000000	4	1000100001001000	2	1000100001001000	2
32	0010000100000000	4	0010000100000000	4	0100010000001001	1	0100010000001001	1
33	0000010000100000	3	0000010000100000	3	0100100001001001	1	0100100001001001	1
34	0000001000010000	3	0100010000010010	1	1000100100100000	3	0100010000010010	1
35	0000000100001000	3	0100100000010001	1	1001000000001000	3	0100100000010001	1
36	0000000010000100	3	0100000010000000	4	1001000001000100	3	0100000010000000	4
37	0000010000100000	2	0000010000100000	2	1000001000000001	1	1000001000000001	1
38	0000000010000100	2	0100010000100100	3	1000100010010000	2	0100010000100100	3
39	0000000100001000	2	0100010000100100	2	1000100100100000	2	0100010000100100	2
40	0000001000010000	2	0100100000100010	1	1001000000001000	2	0100100000100010	1
41	0000010001000001	1	0000010001000001	1	1000010000000010	1	1000010000000010	1
42	0000010010000010	1	0000010010000010	1	1000000100000000	4	1000000100000000	4
43	0000100010000001	1	0000100010000001	1	1001000001000100	2	1001000001000100	2
44	0000100100000010	1	0000100100000010	1	1000100000001001	1	1000100000001001	1
45	0001000100000001	1	0001000100000001	1	1001000010001000	3	1001000010001000	3
46	0001001000000010	1	0001001000000010	1	1001000100010000	3	1001000100010000	3
47	0010001000000001	1	0010001000000001	1	1000100000010010	1	1000100000010010	1
48	0010010000000010	1	0010010000000010	1	0100010000001000	3	0100010000001000	3
49	0000000001000010	1	0100100010010001	1	1001000000010001	1	0100100010010001	1
50	0000000010001001	1	0100100001000100	3	1001000000100010	1	0100100001000100	3
51	0000000010010010	1	0100010010010000	3	1001000001001001	1	0100010010010000	3
52	0000000100010001	1	0100010010010000	2	1001000010010001	1	0100010010010000	2
53	0000000100100010	1	0100100001000100	2	1001000100100001	1	0100100001000100	2
54	0000001000100001	1	0100100100100001	1	1001001001000001	1	0100100100100001	1
55	0000001001000010	1	0100100100010000	3	0100001000001001	1	0100100100010000	3
56	0001000001000000	4	0001000001000000	4	1001001000100000	3	1001001000100000	3

© ISO/IEC 1999 – All rights reserved

Copyright International Organization for Standardization
Provided by IHS under license with ISO
No reproduction or networking permitted without license from IHS
Not for Resale

8-bit byte	State 1		State 2		State 3		State 4	
	Code Word msb lsb	Next State	Code Word msb lsb	Next State	Code Word msb lsb	Next State	Code Word msb lsb	Next State
57	0010000010000000	4	0010000010000000	4	1001000010001000	2	1001000010001000	2
58	0010010010010000	3	0010010010010000	3	1001000100010000	2	1001000100010000	2
59	0010010001001000	3	0100100100010000	2	0010010001001000	3	0100100100010000	2
60	0010010000100100	3	0010010000100100	3	1001001000100000	2	1001001000100000	2
61	0010010000000100	3	0010010000000100	3	0100001001001000	2	0100001001001000	2
62	0001001001001000	3	0100000010000001	1	0001001001001000	3	0100000010000001	1
63	0001001000100100	3	0001001000100100	3	0100001001001000	3	0100001001001000	3
64	0001001000000100	3	0001001000000100	3	0100010010001000	3	0100010010001000	3
65	0000100100100100	3	0000100100100100	3	0100100100001000	3	0100100100001000	3
66	0000100100000100	3	0000100100000100	3	1000010000000100	3	1000010000000100	3
67	0000100000100000	3	0000100000100000	3	1000010000100100	3	1000010000100100	3
68	0000010010000100	3	0000010010000100	3	1000010001001000	3	1000010001001000	3
69	0000010000010000	3	0000010000010000	3	1000010010010000	3	1000010010010000	3
70	0000001001000100	3	0100001000000100	2	1000100000001000	3	0100001000000100	2
71	0000001000001000	3	0100100000010000	3	1000100010001000	3	0100100000010000	3
72	0000000100100100	3	0100010001000100	3	1000100100010000	3	0100010001000100	3
73	0000000100000100	3	0100001000100100	3	1001000000010000	3	0100001000100100	3
74	0000010000010000	2	0000010000010000	2	1000100001000100	3	1000100001000100	3
75	0001001001001000	2	0100001000000100	3	0001001001001000	2	0100001000000100	3
76	0000010010000100	2	0000010010000100	2	0100010000001000	2	0100010000001000	2
77	0000100000100000	2	0000100000100000	2	0100010010001000	2	0100010010001000	2
78	0010010001001000	2	0100000100000010	1	0010010001001000	2	0100000100000010	1
79	0000100100000100	2	0000100100000100	2	0100100100001000	2	0100100100001000	2
80	0000100100100100	2	0000100100100100	2	1000010000000100	2	1000010000000100	2
81	0001001000000100	2	0001001000000100	2	1000010000100100	2	1000010000100100	2
82	0001001000100100	2	0001001000100100	2	1000010001001000	2	1000010001001000	2
83	0010010000000100	2	0010010000000100	2	1000010010010000	2	1000010010010000	2
84	0010010000100100	2	0010010000100100	2	1000100000001000	2	1000100000001000	2
85	0010010010010000	2	0010010010010000	2	0100010001001001	1	0100010001001001	1
86	0000000100000100	2	0100001000100100	2	1000100001000100	2	0100001000100100	2
87	0000000100100100	2	0100010001000100	2	1000100010001000	2	0100010001000100	2

Copyright International Organization for Standardization
Provided by IHS under license with ISO
No reproduction or networking permitted without license from IHS
Not for Resale
© ISO/IEC 1999 – All rights reserved

Annex G

(normative)

Optimum Power Control

G.1 Optimum recording power

The optimum recording powers Pp, Pb1, and Pb2 depend on the disk, the drive and the recording speed.

The determination of values for Pp, Pb1, and Pb2 for the actual disk/drive combination at the actual recording speed, is called the Optimum Power Control procedure (OPC procedure).

For a sensitive OPC procedure, the modulation versus power curve m(Pw) shall be determined in a power range with sufficient variation of the modulation as a function of the power (slope g = (dm/dPw)/(m/Pw)). The OPC procedure determines for the actual disk/drive combination and recording speed, the value Ptarget of the power for which g = gtarget.

To facilitate the OPC procedure, values are provided for PIND, γtarget, ρ, ε1 and ε2 in the Control Data in the Lead-in Area. These values can be used as starting values in test recordings for the determination of the actual optimum Pp, Pb1, and Pb2.

The relevance of the parameters for determining Pp, Pb1, and Pb2 is shown in the following formulas and figure G.1:

$m = I_{14} / I_{14H}$: the modulation amplitude of the HF signal

$\gamma = (dm/dPw) / (m/Pw)$: the normalized slope of the function m(Pw)

P_{IND} : indicated estimate for P_{target} in the control data

$P_{target} = Pw(\text{at } \gamma_{target})$: the write power at $\gamma = \gamma_{target}$

ρ : the multiplication factor to obtain Pp

$Pp = \rho \times P_{target}$: the optimum write power

ε1 : the bias 1 / write power ratio

ε2 : the bias 2 / write power ratio

$Pb1 = \varepsilon 1 \times Pp$: the optimum bias 1 power Pb1

$Pb2 = \varepsilon 2 \times Pp$: the optimum bias 2 power Pb2

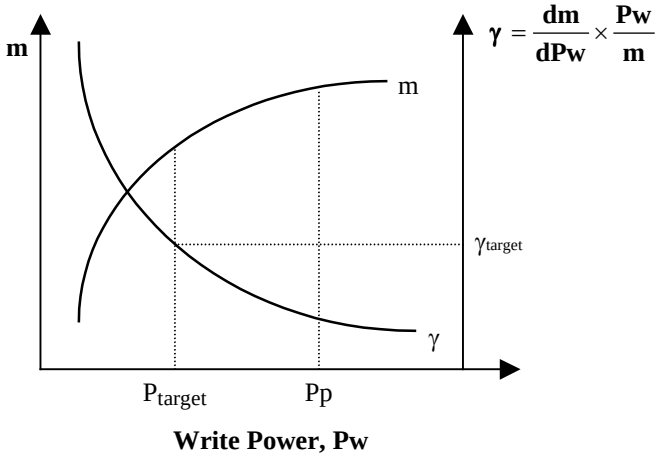

Figure G.1 - OPC

© ISO/IEC 1999 – All rights reserved

Copyright International Organization for Standardization
Provided by IHS under license with ISO
No reproduction or networking permitted without license from IHS
Not for Resale

G.2 OPC procedure for media testing

For values of write powers Pw < Pp, the modulation of the HF signal is smaller than the value at Pp. By test recording random 8-to-16 data with different write powers Pwi, using $Pb1 = \varepsilon1 \times P_{IND}$ and $Pb2 = \varepsilon2 \times Pw_i$ the modulation versus power curve is obtained.

After determining γ_i for several write powers Pw_i, P_{target} = Pw at γ_{target} is determined and Pp and Pb1 , Pb2 are obtained by:

$$Pp = \rho \times P_{target}$$

$$Pb1 = \varepsilon1 \times Pp$$

$$Pb2 = \varepsilon2 \times Pp$$

Remark 1:

The indicated values for P_{target} (P_{IND}), ρ, γ_{target}, $\varepsilon1$ and $\varepsilon2$ in the control data are determined by the media manufacturer, for recording at the maximum, reference, and minimum velocities, and for read-out at the reference velocity. These measurements shall be made at 25 °C using the optical system in 9.2.

Remark 2:

The OPC procedure should be performed in an area on the disk that is specially reserved for this purpose: The Drive Test Zone or the Disk Test Zone.

Remark 3:

After the OPC procedure the used tracks in the Test Zone shall be erased by irradiating the tracks using only the Pb1 power.

Remark 4:

The ratio $\frac{Pp}{\rho \times P_{IND}}$ determined at the linear velocity using this OPC method, can be used to determine the optimum power, Pp, at other velocities, based on the indicated power PIND and the multiplication factor ρ, of other velocities:

$$Pp_b = \rho_b \times P_{INDb} \times \frac{Pp_a}{\rho_a \times P_{INDa}}$$

--`,,```,,,,````-`-`,,`,,`,`,,`---

© ISO/IEC 1999 – All rights reserved
Copyright International Organization for Standardization
Provided by IHS under license with ISO
No reproduction or networking permitted without license from IHS
Not for Resale

Annex H

(normative)

Logical to Physical address translation

The sequence for determining the PSN for a supplied LSN shall be equivalent to the following. The mathematics is all integer arithmetic, such that

int [*x*] shall be the largest integer not exceeding *x*,

1) Skip the areas set aside for replacement.

Apply the formula below to the LSN to map around the areas set aside for defect management. All math is integer arithmetic. PSN_1 is an intermediate value used in steps 2) and 3).

$$PSN_1 = LSN + SL \times \left(1 + \text{int}\left[\frac{LSN}{SI}\right]\right) + (31000)$$

2) Apply the PDL

If the PDL has no entries, the following does not apply. Execute:

```
Index = 0
        while ((PSN1 ≥ PDL[Index]) && (Index < PDL_Size)) {
                    PSN1 = PSN1 + 16
                    Index = Index + 1
        }
```

PDL_Size is the total number of entries in the PDL with Defect Types 00, 01, or 10.

3) Apply the SDL

Attempt to find (PSN_1 AND (FFFFF0)) in the SDL, where AND is a bitwise logical AND operation. If found in the Defective Block Number field, the PSN shall be determined as shown in table H.1. If not found in the SDL, no further translation is required.

Table H.1 - SDL Interpretation

Status	Translation
00	$PSN = PSN_{REPLACEMENT} + (PSN_1 \,\&\, (0F))$
01, reading	$PSN = PSN_1$
01, writing	$PSN = PSN_{REPLACEMENT} + (PSN_1 \,\&\, (0F))$
10	$PSN = PSN_1$
11	$PSN = PSN_1$

$PSN_{REPLACEMENT}$ is the Replacement Block Number corresponding to the matching Defective Block Number. The sequence above indicates that the space set aside for replacement shall be slipped according to the PDL. However, as entries in the SDL indicate the physical address, they shall not be adjusted by the PDL. This means that Replacement Block Numbers in the SDL may not have SI contiguous blocks every (SI + SL) interval.

Formatting of the disk

Disks shall be formatted prior to use. Formatting is defined as writing the DMAs; there is no requirement that the entire disk be written. The drive shall determine SI and SL from internal or external settings.

If a prior PDL exists, all entries with Defect Type 00 or 11 shall be retained. If the manufacturer's certification list is to be included, the existing entries with Defect Type 00 or 11 shall be set to Defect Type 00. If the manufacturer's certification list is to be ignored, the existing entries with Defect Type 00 or 11 shall be set to Defect Type 11.

If a prior PDL exists, entries with Defect Type 01 or 10 may be retained or removed.

© ISO/IEC 1999 – All rights reserved

Copyright International Organization for Standardization
Provided by IHS under license with ISO
No reproduction or networking permitted without license from IHS
Not for Resale

New entries with Defect Type 01 may be generated if the drive performs certification.

New entries with Defect Type 10 may be generated if a defect list is provided to the drive or if entries in an existing SDL are migrated to the PDL, or both.

An SDL shall always be generated. The SDL entries shall be set to Status 10, Defective Block Number = 0, and a unique Replacement Block Number determined as follows:

1) N_SDL = 0

2) Apply the formula below to map around the areas set aside for user data. All math is integer arithmetic. PSN_1 is an intermediate value used in future steps.

$$PSN_1 = 16 \times N_SDL + SI \times \text{int}\left[\frac{16 \times N_SDL}{SL}\right] + (31000)$$

3) If the PDL has no entries, the following shall not apply. Execute:

```
Index = 0
        while ((PSN1 ≥ PDL[Index]) && (Index < PDL_Size)) {
                    PSN1 = PSN1 + 16
                    Index = Index + 1
        }
```

PDL_Size is the total number of entries in the PDL with Defect Types 00, 01, or 10.

4) If $PSN_1 \leq$ Last PSN in Data Area, record the SDL entry, increment N_SDL, and repeat from 2).

5) Record the SDL.

Linear Replacement

If an error is detected in an ECC Block during a read, the drive may replace the ECC Block, mark the ECC Block for replacement, or ignore the error. If the ECC Block is to be replaced or marked for replacement, the drive shall search the SDL for entries with the Status 10 to find the best available replacement ECC Block. The best ECC Block may have the nearest PSN, may have the lowest seek time as determined by the drive, or may be computed by any other algorithm.

The Status of the SDL entry shall be set to 00 if the ECC Block is replaced. The SDL sort order shall be maintained. The data from the original location shall be recorded in the ECC Block identified by the Replacement Block Number.

The Status of the SDL entry shall be set to 01 if the ECC Block is being marked for later replacement. The SDL sort order shall be maintained. Future read requests shall be fulfilled from the Defective Block Number; future write requests shall be handled by writing to the Replacement Block Number, changing the Status to 00, and updating the SDL sort order.

© ISO/IEC 1999 – All rights reserved
Copyright International Organization for Standardization
Provided by IHS under license with ISO
No reproduction or networking permitted without license from IHS
Not for Resale

Annex J

(normative)

Recording Unit Block positioning

J.1 Variations in start position

The tolerance for the start position of each Recording Unit Block is defined in 13.7.3. The theoretical start position shall be determined based on a perfect spiral , using the number of Channel bits of each Recording Unit Block, the nominal track pitch, Tp of 0,80 μm, and the nominal Channel bit length.

The nominal Channel bit length shall be $\frac{2 \times \pi \times \mathrm{Tp}}{28{,}5}$

For each Recording Unit Block (RUB_N), a track number and a position along the track shall be calculated.

J.2 Example calculation

Each AFCM on a given track number, tn, can be designated as a AFCM number, fcn, where the first AFCM occurs in the centre of the first ADIP data bit after the sync of segment 0 of a track. Then the start position of a RUB can be determined by the number of Channel bits, cbn, from a preceding AFCM. For any given RUB_N, a generic track number, tn_f is calculated by

$$\mathrm{tn_f} = \sqrt{\left(\frac{\mathrm{R1}}{\mathrm{Tp}} - 0{,}5\right)^2 + \frac{2 \times \mathrm{NB} \times \mathrm{bn}}{\mathrm{N2}}} - \left(\frac{\mathrm{R1}}{\mathrm{Tp}} - 0{,}5\right)$$

where

bn is the block number in the Rewritable area	bn = 0 for PSN (30000) to (3000F) bn = 1 for PSN (30010) to (3001F) …
R1 is the nominal start radius for the first bn	R1 = 24,00 mm
NB is the number of Channel bits of a RUB	NB = 657 696 Channel bits
N2 is the difference in Channel bits between any two adjacent tracks	N2 = 28,5 Channel bits
Tp is the nominal track pitch	Tp = 0,80 μm

then using int [*x*] as the maximum integer not exceeding *x*

tn = int [tn_f]

fcn = int [NF × (tn_f - tn)]

cbn = int [(N1 + N2 × tn) × (tn_f - (tn + fcn / NF)) + 0,5]

where

N1 is the number of Channel bits in the track at R1	N1 = 855 000 Channel bits
NF is the number of AFCM per track	NF = 96

© ISO/IEC 1999 – All rights reserved

Copyright International Organization for Standardization
Provided by IHS under license with ISO
No reproduction or networking permitted without license from IHS
Not for Resale

Annex K

(informative)

Transportation

K.1 General

As transportation occurs under a wide range of temperature and humidity variations, for differing periods, by many methods of transport and in all parts of the world, it is not practical to specify mandatory conditions for transportation or for packaging.

K.2 Packaging

The form of packaging should be agreed between sender and recipient or, in absence of such an agreement, is the responsibility of the sender. It should take into account the following hazards.

K.2.1 Temperature and humidity

Insulation and wrapping should be designed to maintain the conditions for storage over the estimated period of transportation.

K.2.2 Impact loads and vibrations

a) Avoid mechanical loads that would distort the shape of the disk.

b) Avoid dropping the disk.

c) Disks should be packed in a rigid box containing adequate shock-absorbent material.

d) The final box should have a clean interior and a construction that provides sealing to prevent the ingress of dirt and moisture.

© ISO/IEC 1999 – All rights reserved
Copyright International Organization for Standardization
Provided by IHS under license with ISO
No reproduction or networking permitted without license from IHS
Not for Resale

Annex L

(informative)

Measurement of the groove wobble amplitude

L.1 Relation between normalized wobble signal and wobble amplitude

The wobble amplitude in nm cannot easily be measured directly. However, it can be derived from the normalized wobble signal. The theoretical results for such a derivation are given below.

The wobble signal I_W can be seen as:

$$I_W = A \times \sin(2 \times \pi \times a / p)$$

where:

a = wobble amplitude in nm

Tp = track pitch of the radial error signal

A = the peak value of the radial error signal

In figure L.1 the parameters a, p, A and I_W are shown. The groove has a peak displacement of 'a' (wobble amplitude) from the averaged centre of the groove to the actual centre of the groove. The normalized wobble signal can now be defined as:

$$\frac{I_W}{(I_1 - I_2)_{pp}} = \frac{I_W}{2 \times A} = \frac{\sin\left(2 \times \pi \times \frac{a}{p}\right)}{2}$$

where

$$(I_1 - I_2)_{pp} = 2 \times A$$

The wobble signal I_W is not only dependent on the wobble amplitude a, but also the track pitch Tp. Due to normalization, dependencies on groove geometry, spot shape and optical aberrations have been eliminated.

L.2 Tolerances of the normalized wobble signal and the AFCM signal

From the above formulae for the normalized wobble signal, the tolerances as given in 24.4 can be converted to nm for a given track pitch of 'p' = 0,80 μm.

Lower limit: 0,050 corresponds to 13 nm.
Upper limit: 0,078 corresponds to 20 nm.

To generate an I_{AFCM} signal amplitude within the tolerances as defined in clause 24.6, the peak deviation of the groove from the average track centre line due to the AFCM (in nm), should be nominally 2,25 times the peak deviation of the groove from the average track centre line due to the wobble (in nm).

© ISO/IEC 1999 – All rights reserved

Copyright International Organization for Standardization
Provided by IHS under license with ISO
No reproduction or networking permitted without license from IHS
Not for Resale

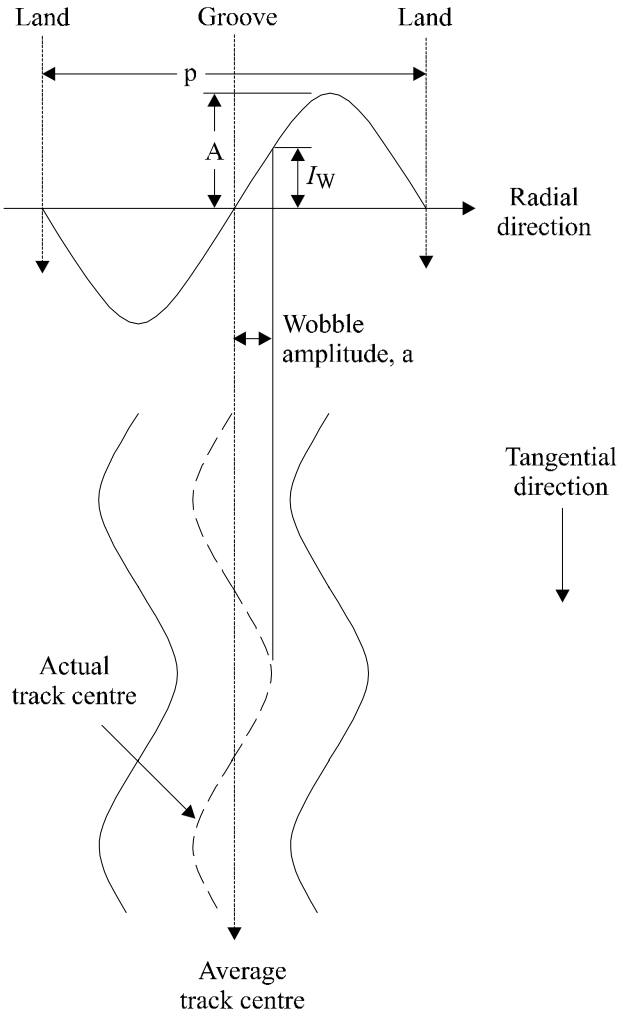

Figure L.1 - Wobble amplitude of the groove

© ISO/IEC 1999 – All rights reserved
Copyright International Organization for Standardization
Provided by IHS under license with ISO
No reproduction or networking permitted without license from IHS
Not for Resale

Annex M

(informative)

ADIP Encoding Process

A disk master can be created using the following encoding process system. To insure that an integer number of wobble cycles occur between AFCMs, the carrier frequency and Biphase signal should be created from the rotational velocity of the disk as shown in figure M.1

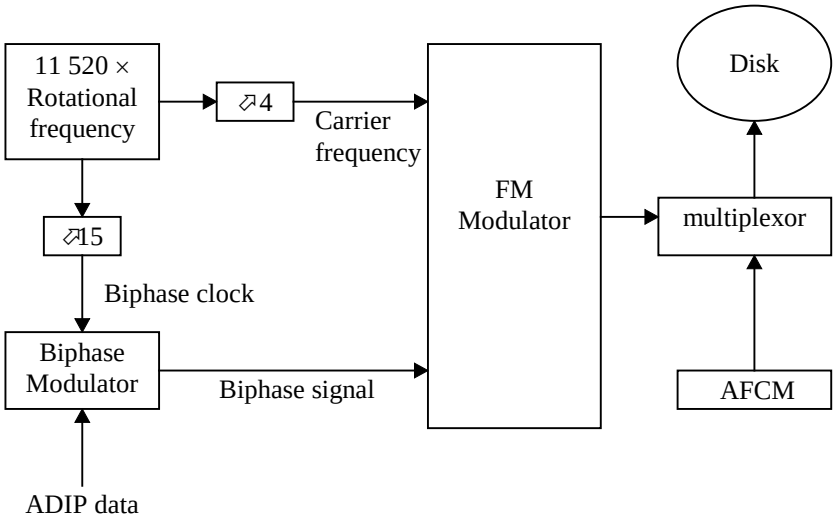

Figure M.1 - ADIP Encoding

© ISO/IEC 1999 – All rights reserved

Copyright International Organization for Standardization
Provided by IHS under license with ISO
No reproduction or networking permitted without license from IHS
Not for Resale

Annex N

(informative)

Values to be Implemented in Existing and Future Specifications

The values for bytes which this International Standard specifies are related to DVD disks which are in conformance with this International Standard, viz. +RW Format disks. It is expected that other categories of DVD disks will be standardized in future. It is therefore recommended that the following values be used for these other DVD disks. Further possible bit patterns are intended for future standardization.

Identification Data

Bit b_{31} shall be set to

ZERO, indicating CLV format on Read-Only, Recordable, and +RW disks
ONE, indicating Zoned format for Rewritable disks

Bit b_{30} shall be set to

ZERO, indicating pit tracking
ONE, indicating groove tracking

Bit b_{29} shall be set to

ZERO if the reflectivity is greater than 40 % with a PBS optical system
ONE if the reflectivity is less than 40 % max. with a PBS optical system

Bit b_{28} shall be set to ZERO

Bits b_{27} to b_{26} shall be set to

ZERO ZERO in the Data Zone
ZERO ONE in the Lead-in Zone
ONE ZERO in the Lead-out Zone
ONE ONE in the Middle Zone

Bit b_{25} shall be set to

ZERO, indicating read-only data
ONE, indicating other than read-only data

Bit b_{24} shall be set to ZERO

Bits b_{23} to b_0 shall specify the Physical Sector Number

Physical format information in the Lead-in Zone

Byte 0 - Disk Category and Version Number

Bits b_7 to b_4 shall specify the Disk Category

if set to 0000, they indicate a DVD Read-Only disk
if set to 0001, they indicate a DVD-RAM disk
if set to 0010, they indicate a DVD-Recordable disk
if set to 1001, they indicate a +RW disk

Bits b_3 to b_0 shall specify the Version Number

if set to 0001, they specify this International Standard

© ISO/IEC 1999 – All rights reserved
Copyright International Organization for Standardization
Provided by IHS under license with ISO
No reproduction or networking permitted without license from IHS
Not for Resale

Byte 1 - Disk size and maximum transfer rate

Bits b_7 to b_4 shall specify the disk size

if set to 0000, they specify a 120 mm disk
if set to 0001, they specify an 80 mm disk

Bits b_3 to b_0 shall specify the maximum transfer rate

if set to 0000, they specify a maximum transfer rate of 2,52 Mbits/s
if set to 0001, they specify a maximum transfer rate of 5,04 Mbits s
if set to 0010, they specify a maximum transfer rate of 10,08 Mbits /s
if set to 1111, they specify no maximum transfer rate is specified.

Byte 2 - Disk structure

Bit b_7 shall be set to ZERO.

Bits b_6 and b_5 shall specify the disk Type

if set to 00, they specify a single recording layer per side
if set to 01, they specify two recording layers per side

Bit b_4 shall be set to ZERO

Bits b_3 to b_0 specify the layer type

if set to 0001, they specify a read-only layer
if set to another bit pattern, the following rules shall be applied

Bit b_3 shall be set to ZERO

Bit b_2 if set to

ZERO, shall specify that the disk does not contain re-writable Data Zones
ONE , shall specify that the disk contains re-writable Data Zones

Bit b_1 if set to

ZERO, shall specify that the disk does not contain recordable Data Zones
ONE , shall specify that the disk contains recordable Data Zones

Bit b_0 if set to

ZERO, shall specify that the disk does not contain embossed Data Zones
ONE, shall specify that the disk contains embossed Data Zones

Byte 3 - Recording density

Bits b_7 to b_4 shall specify the average Channel bit length

if set to 0000, they specify 0,133 μm
if set to 0001, they specify 0,147 μm
if set to 0010, they indicate that this average length is in the range 0,205 μm to 0,218 μm
if set to 1000, they specify 0,176 37 μm

Bits b_3 to b_0 shall specify the average track pitch

if set to 0000, they indicate a track pitch of 0,74 μm
if set to 0001, they indicate a track pitch of 0,80 μm

© ISO/IEC 1999 – All rights reserved

Copyright International Organization for Standardization
Provided by IHS under license with ISO
No reproduction or networking permitted without license from IHS
Not for Resale

ICS 35.220.30

Price based on 85 pages

© ISO/IEC 1999 – All rights reserved

--`,,```,,,,````-`-`,,`,,`,`,,`---

Copyright International Organization for Standardization
Provided by IHS under license with ISO
No reproduction or networking permitted without license from IHS

Not for Resale