INTERNATIONAL STANDARD

ISO/IEC 16824

First edition
1999-05-15

Information technology — 120 mm DVD rewritable disk (DVD-RAM)

Technologies de l'information — Disque à réécriture DVD de diamètre 120 mm *(DVD-RAM)*

Reference number
ISO/IEC 16824:1999(E)

Copyright International Organization for Standardization
Provided by IHS under license with ISO
No reproduction or networking permitted without license from IHS

Not for Resale

Contents

Page

Section 1 - General **1**

1 Scope **1**

2 Conformance **1**
2.1 Optical Disk **1**
2.2 Generating system **1**
2.3 Receiving system **1**

3 Normative references **1**

4 Definitions **1**
4.1 Case **1**
4.2 Channel bit **2**
4.3 Digital Sum Value (DSV) **2**
4.4 Disk Reference Plane **2**
4.5 Dummy substrate **2**
4.6 Embossed mark **2**
4.7 Entrance surface **2**
4.8 Land and Groove **2**
4.9 Mark **2**
4.10 Phase change **2**
4.11 Polarization **2**
4.12 Recording layer **2**
4.13 Sector **2**
4.14 Space **2**
4.15 Substrate **2**
4.16 Track **2**
4.17 Track pitch **2**
4.18 ZCLV **2**
4.19 Zone **2**

5 Conventions and notations **2**
5.1 Representation of numbers **2**
5.2 Names **3**

6 List of acronyms **3**

7 General description of the optical disk **3**

8 General requirements **4**
8.1 Environments **4**
8.1.1 Test environment **4**

© ISO/IEC 1999

All rights reserved. Unless otherwise specified, no part of this publication may be reproduced or utilized in any form or by any means, electronic or mechanical, including photocopying and microfilm, without permission in writing from the publisher.

ISO/IEC Copyright Office • Case postale 56 • CH-1211 Genève 20 • Switzerland

Printed in Switzerland

Copyright International Organization for Standardization
Provided by IHS under license with ISO
No reproduction or networking permitted without license from IHS Not for Resale

8.1.2 Operating environment **4**
8.1.3 Storage environment **5**
8.1.4 Transportation **5**
8.2 Safety requirement **5**
8.3 Flammability **5**

9 Reference Drive **5**

9.1 Optical Head **5**
9.2 Read channels **6**
9.3 Rotation speed **6**
9.4 Disk clamping **7**
9.5 Normalized servo transfer function **7**
9.6 Reference Servo for axial tracking **7**
9.7 Reference Servo for radial tracking **8**

Section 2 - Dimensional, mechanical and physical characteristics of the disk **9**

10 Dimensional characteristics **9**

10.1 Overall dimensions **10**
10.2 First transition area **11**
10.3 Second transition area **11**
10.4 Clamping Zone **11**
10.5 Third transition area **11**
10.6 Rim area **12**
10.7 Remark on tolerances **12**
10.8 Label **12**

11 Mechanical characteristics **12**

11.1 Mass **12**
11.2 Moment of inertia **12**
11.3 Dynamic imbalance **12**
11.4 Sense of rotation **12**
11.5 Runout **12**
11.5.1 Axial runout **12**
11.5.2 Radial runout **12**

12 Optical characteristics **13**

12.1 Index of refraction **13**
12.2 Thickness of the transparent substrate **13**
12.3 Angular deviation **13**
12.4 Birefringence of the transparent substrate **13**
12.5 Reflectivity **13**

Section 3 - Format of information **14**

13 Data format **14**

13.1 Data Frames **14**
13.1.1 Data ID **15**
13.1.2 Data ID Error Detection code (IED) **16**
13.1.3 Reserved bytes **16**
13.1.4 Error Detection Code (EDC) **16**
13.2 Scrambled Frames **17**
13.3 ECC Blocks **17**
13.4 Recording Frames **19**
13.5 Recording code and NRZI conversion **20**

--`,,```,,,,````-`-`,,`,,`,`,,`---

Copyright International Organization for Standardization
Provided by IHS under license with ISO
No reproduction or networking permitted without license from IHS Not for Resale

13.6 Recorded Data Field **21**
13.7 DC component suppress Control (DCC) **22**
13.7.1 DCC for the data in the Rewritable Area **22**
13.7.2 DCC for the data in the Embossed Area **22**
13.7.3 PID and PED recording **23**

14 Track format **23**

14.1 Track shape **23**
14.2 Track path **24**
14.3 Track pitch **24**
14.4 Track layout **24**
14.5 Rotation speed **24**
14.6 Radial alignment **25**
14.7 Sector number **25**

15 Sector format **26**

15.1 Sector layout **26**
15.1.1 Sector layout in the Rewritable Area **26**
15.1.2 Sector layout in the Embossed Area **26**
15.2 VFO fields **27**
15.3 Address Mark (AM) **28**
15.4 Physical ID (PID) fields **28**
15.5 PID Error Detection code (PED) fields **29**
15.6 Postamble 1 and Postamble 2 (PA 1, PA 2) fields **29**
15.7 Mirror field **31**
15.8 Gap field **31**
15.9 Guard 1 field **31**
15.10 Pre-Synchronous code (PS) field **31**
15.11 Data field **31**
15.12 Postamble 3 (PA 3) field **31**
15.13 Guard 2 field **31**
15.14 Recording polarity randomization **31**
15.15 Buffer field **32**

16 Format of the Information Zone **32**

16.1 Division of the Information Zone **32**
16.2 Lead-in Zone **34**
16.2.1 Structure of Lead-in Zone **34**
16.2.2 Initial Zone **34**
16.2.3 Reference Code Zone **34**
16.2.4 Buffer Zone 1 **34**
16.2.5 Buffer Zone 2 **35**
16.2.6 Control Data Zone **35**
16.2.7 Connection Zone **39**
16.2.8 Guard Track Zones 1 and 2 **40**
16.2.9 Disk Test Zone **40**
16.2.10 Drive Test Zone **40**
16.2.11 Reserved Zone **40**
16.2.12 DMA 1 and DMA 2 **40**
16.3 Data Zone **41**
16.3.1 Structure of Data Zone and of the Defect Management Areas (DMAs) **41**
16.3.2 Guard Track Zones **41**
16.3.3 Partitioning **41**
16.4 Lead-out Zone **43**
16.4.1 Structure of Lead-out Zone **43**
16.4.2 DMA 3 and DMA 4 **43**
16.4.3 Reserved Zone **43**

Copyright International Organization for Standardization
Provided by IHS under license with ISO
No reproduction or networking permitted without license from IHS Not for Resale

16.4.4 Guard Track Zone 1 **43**
16.4.5 Drive Test Zone **43**
16.4.6 Disk Test Zone **43**
16.4.7 Guard Track Zone 2 **43**

17 Defect management **43**
17.1 Defect Management Areas (DMAs) **43**
17.2 Disk Definition Structure (DDS) **44**
17.3 Spare sectors **46**
17.4 Slipping Algorithm **47**
17.5 Linear Replacement Algorithm **47**
17.6 Primary Defect List (PDL) **48**
17.7 Secondary Defect List (SDL) **50**
17.8 Formatting of the disk **51**
17.8.1 Full and Partial Certification **52**
17.8.2 Initialization **52**
17.8.3 Re-initialization **52**
17.8.4 Data field number resulting from Initialization and Re-initialization **53**
17.9 Write procedure **54**
17.10 Read procedure **54**
17.10.1 Blank ECC block **54**
17.10.2 Read procedure **54**

Section 4 - Characteristics of embossed information **55**

18 Method of testing **55**
18.1 Environment **55**
18.2 Reference Drive **55**
18.2.1 Optics and mechanics **55**
18.2.2 Read power **55**
18.2.3 Read channels **55**
18.2.4 Tracking channel **55**
18.2.5 Tracking **55**
18.3 Definition of signals **55**

19 Signals from lands and grooves **60**
19.1 Push-pull signal **60**
19.2 Divided push-pull signal **60**
19.3 On-track signal **61**
19.4 Phase depth **61**
19.5 Wobble signal **61**

20 Signals from Header fields **62**
20.1 VFO 1 and VFO 2 **62**
20.2 Address Mark, PID, PED and Postamble **62**
20.3 Signals from Header 1, Header 2, Header 3 and Header 4 **63**
20.4 Phase depth **63**

21 Signals from Embossed Area **63**
21.1 High Frequency (HF) signal **63**
21.1.1 Modulated amplitude **63**
21.1.2 Signal asymmetry **64**
21.1.3 Cross-track signal **64**
21.2 Jitter **64**

Copyright International Organization for Standardization
Provided by IHS under license with ISO
No reproduction or networking permitted without license from IHS Not for Resale

21.3 Servo signal **64**
21.3.1 Differential phase tracking error signal **64**
21.3.2 Tangential push-pull signal **64**

Section 5 - Characteristics of the recording layer **65**

22 Method of testing **65**
22.1 Environment **65**
22.2 Reference Drive **65**
22.2.1 Optics and mechanics **66**
22.2.2 Read power **66**
22.2.3 Read channel **66**
22.2.4 Tracking **66**
22.3 Write conditions **66**
22.3.1 Write pulse **66**
22.3.2 Write power **66**
22.4 Definition of signals **66**

23 Write characteristics **67**
23.1 Modulated amplitude and Signal asymmetry **67**
23.2 Jitter **67**

Section 6 - Characteristics of user data **67**

24 Method of testing **67**

Annexes

A - Measurement of the angular deviation α **68**

B - Measurement of birefringence **70**

C - Measurement of the differential phase tracking error **72**

D - Reflectivity calibration and measuring method **76**

E - Tapered cone for disk clamping **78**

F - Measuring conditions for the operation signals **79**

G - 8-to-16 Recording code with RLL (2,10) requirements **81**

H - Definition of the write pulse **91**

J - Guideline for randomization of the Gap length, the Guard 1 length and the recording polarity **93**

K - Transportation **94**

L - Guideline for sector replacement **95**

Copyright International Organization for Standardization
Provided by IHS under license with ISO
No reproduction or networking permitted without license from IHS Not for Resale

Foreword

ISO (the International Organization for Standardization) and IEC (the International Electrotechnical Commission) form the specialized system for worldwide standardization. National bodies that are members of ISO or IEC participate in the development of International Standards through technical committees established by the respective organization to deal with particular fields of technical activity. ISO and IEC technical committees collaborate in fields of mutual interest. Other international organizations, governmental and non-governmental, in liaison with ISO and IEC, also take part in the work.

International Standards are drafted in accordance with the rules given in the ISO/IEC Directives, Part 3.

In the field of information technology, ISO and IEC have established a joint technical committee, ISO/IEC JTC 1. Draft International Standards adopted by the joint technical committee are circulated to national bodies for voting. Publication as an International Standard requires approval by at least 75 % of the national bodies casting a vote.

This International Standard was prepared by JISC (as Standard JIS X 6243-1998) with document support and contribution from ECMA and was adopted, under a special “fast-track procedure”, by Joint Technical Committee ISO/IEC JTC 1, *Information technology*, in parallel with its approval by national bodies of ISO and IEC.

Annexes A to H form a normative part of this International Standard. Annexes J to L are for information only.

Copyright International Organization for Standardization
Provided by IHS under license with ISO
No reproduction or networking permitted without license from IHS
Not for Resale

Information technology — 120 mm DVD rewritable disk (DVD-RAM)

Section 1 - General

1 Scope

This International Standard specifies the mechanical, physical and optical characteristics of a 120 mm optical disk to enable interchange of such disks. It specifies the quality of the recorded signals, the format of the data and the recording method, thereby allowing for information interchange by means of such disks. The data can be written, read and overwritten many times using the phase change method. This disk is identified as DVD-RAM.

This International Standard specifies

- two related but different Types of this disk (see clause 7),
- the conditions for conformance,
- the environments in which the disk is to be tested, operated and stored,
- the mechanical, physical and dimensional characteristics of the disk, so as to provide mechanical interchange between data processing systems,
- the format of the information on the disk, including the physical disposition of the tracks and sectors, the error correcting codes and the coding method,
- the characteristics of the signals recorded on the disk, thus enabling data processing systems to read the data from the disk.

This International Standard provides for the interchange of disks between optical disk drives. Together with a standard for volume and file structure, it provides for full data interchange between data processing systems. The optical disks specified by this International Standard may be enclosed in cases according to ISO/IEC 16825 as specified therein.

2 Conformance

2.1 Optical Disk

A claim of conformance with this International Standard shall specify the Type implemented. An optical disk shall be in conformance with this International Standard if it meets all mandatory requirements specified for this Type.

2.2 Generating system

A generating system shall be in conformance with this International Standard if the optical disk it generates is in accordance with 2.1.

2.3 Receiving system

A receiving system shall be in conformance with this International Standard if it is able to handle both Types of optical disk according to 2.1.

3 Normative references

The following normative documents contain provisions which, through reference in this text, constitute provisions of this International Standard. For dated references, subsequent amendments to, or revisions of, any of these publications do not apply. However, parties to agreements based on this International Standard are encouraged to investigate the possibility of applying the most recent editions of the normative documents indicated below. For undated references, the latest edition of the normative document referred to applies. Members of ISO and IEC maintain registers of currently valid International Standards.

ISO 950:1991, *Safety of information technology equipment.*

ISO/IEC 16825:1999, *Information technology — Case for 120 mm DVD-RAM disks.*

4 Definitions

For the purposes of this International Standard, the following definitions apply.

4.1 Case: The housing for an optical disk, that protects the disk and facilitates disk interchange.

Copyright International Organization for Standardization
Provided by IHS under license with ISO
No reproduction or networking permitted without license from IHS Not for Resale

4.2 Channel bit: The elements by which the binary values ZERO and ONE are represented by marks and pits on the disk.

4.3 Digital Sum Value (DSV): The arithmetic sum obtained from a bit stream by allocating the decimal value 1 to Channel bits set to ONE and the decimal value -1 to Channel bits set to ZERO.

4.4 Disk Reference Plane: A plane defined by the perfectly flat annular surface of an ideal spindle onto which the clamping area of the disk is clamped, and which is normal to the axis of rotation.

4.5 Dummy substrate: A layer which may be transparent or not, provided for the mechanical support of the disk and/or a recording layer.

4.6 Embossed mark: A mark so formed as to be unalterable by optical means.

4.7 Entrance surface: The surface of the disk onto which the optical beam first impinges.

4.8 Land and Groove: A trench-like feature of the disk, applied before the recording of any information, and used to define the track location. The groove is located nearer to the entrance surface than the land. The recording is made either on the centre of the groove or on the centre of the land.

4.9 Mark: A feature of the Recording layer which may take the form of an amorphous domain, a pit, or any other type or form that can be sensed by the optical system. The pattern of marks and spaces represents the data on the disk.

4.10 Phase change: A physical effect by which the area of a recording layer irradiated by a laser beam is heated so as to change from an amorphous state to a crystalline state and vice versa.

4.11 Polarization: The direction of polarization of an optical beam is the direction of the electric vector of the beam.

Note - The plane of polarization is the plane containing the electric vector and the direction of propagation of the beam. The polarization is right-handed when to an observer looking in the direction of propagation of the beam, the end-point of the electric vector would appear to describe an ellipse in the clockwise sense.

4.12 Recording layer: A layer of the disk on, or in, which data is written during manufacture and/or use.

4.13 Sector: The smallest addressable part of a track in the Information Zone of a disk that can be accessed independently of other addressable parts.

4.14 Space: A feature of the recording layer which may take the form of a crystalline domain, a non-pit or any other type or form that can be sensed by the optical system. The pattern of marks and spaces represents the data on the disk.

4.15 Substrate: A transparent layer of the disk, provided for mechanical support of the recorded layer(s), through which the optical beam can access a recording layer.

4.16 Track: A 360° turn of a continuous spiral.

4.17 Track pitch: The distance between centrelines of adjacent tracks (a groove and a land), measured in a radial direction.

4.18 ZCLV: A disk format requiring Zoned Constant Linear Velocity operations.

4.19 Zone: An annular area of the disk.

5 Conventions and notations

5.1 Representation of numbers

A measured value is rounded off to the least significant digit of the corresponding specified value. For instance, it implies that a specified value of 1,26 with a positive tolerance of + 0,01 and a negative tolerance of - 0,02 allows a range of measured values from 1,235 to 1,275.

Numbers in decimal notations are represented by the digits 0 to 9.

Numbers in hexadecimal notation are represented by the hexadecimal digits 0 to 9 and A to F in parentheses.

The setting of bits is denoted by ZERO and ONE.

Numbers in binary notations and bit patterns are represented by strings of digits 0 and 1, with the most significant bit shown to the left.

Negative values of numbers in binary notation are given as Two’s complement.

Copyright International Organization for Standardization
Provided by IHS under license with ISO
No reproduction or networking permitted without license from IHS Not for Resale

In each field the data is recorded so that the most significant byte (MSB), identified as Byte 0, is recorded first and the least significant byte (LSB) last.

In a field of 8*n* bits, bit $b_{(8n-1)}$ shall be the most significant bit (msb) and bit b_0 the least significant bit (lsb). Bit $b_{(8n-1)}$ is recorded first.

A binary digit which can be set indifferently to ZERO or to ONE is represented by “x”.

5.2 Names

The names of entities, e.g. specific tracks, fields, zones, etc. are given a capital initial.

6 List of acronyms

AM	Address Mark
BCA	Burst Cutting Area
BPF	Band Pass Filter
DC	Direct Current
DCC	DC Component Suppress Control
DDS	Disk Definition Structure
DMA	Defect Management Area
DSV	Digital Sum Value
ECC	Error Correction Code
EDC	Error Detection Code
FRM	Forced Reassignment Marking
HF	High Frequency
ID	Identification Data
IED	ID Error Detection code
LPF	Low Pass Filter
LSN	Logical Sector Number
NRZ	Non Return to Zero
NRZI	Non Return to Zero Inverted
PA	Postamble
PDL	Primary Defect List
PED	P(ID) Error Detection code
PI	Parity of Inner-code
PID	Physical Identification Data
PLL	Phase Locked Loop
PO	Parity of Outer-code
PS	Pre-Synchronous code
RS	Reed-Solomon code
SDL	Secondary Defect List
SYNC Code	Synchronous Code
VFO	Variable Frequency Oscillator
ZCLV	Zoned Constant Linear Velocity

7 General description of the optical disk

The optical disk that is the subject of this International Standard consists of two substrates bonded together by an adhesive layer, so that the recording layer(s) is on the inside. The centring of the disk is performed on the edge of the centre hole of the assembled disk on the side currently read. Clamping is performed in the Clamping Zone. This International Standard provides for two Types of such disks.

Type 1S consists of a substrate, a single recording layer and a dummy substrate. The recording layer can be accessed from one side only. The nominal capacity is 2,6 Gbytes.

Type 2S consists of two substrates and two recording layers. From one side of the disk, only one of these recording layers can be accessed. The nominal capacity is 5,2 Gbytes.

Alternatively, in Type 1S, the recording layer may be placed, for instance embossed, on the dummy substrate.

When used with the case specified in International Standard ISO/IEC 16825, a disk of Type 1S may be enclosed in either of the three case Types; a disk of Type 2S is to be enclosed only in a Type 1 case.

Data can be written onto the disk as marks in the form of amorphous spots in the crystalline recording layer and can be overwritten with a focused optical beam, using the phase change effect between amorphous and crystalline states. The data can be read with a focused optical beam, using phase change effect as the reflective difference between amorphous and crystalline states. The beam accesses the recording layer through a transparent substrate of the disk.

Part of the disk contains read-only data for the drive in the form of pits embossed by the manufacturer. This data can be read using the diffraction of the optical beam by the embossed pits.

Figure 1 shows schematically the two Types.

Copyright International Organization for Standardization
Provided by IHS under license with ISO
No reproduction or networking permitted without license from IHS Not for Resale

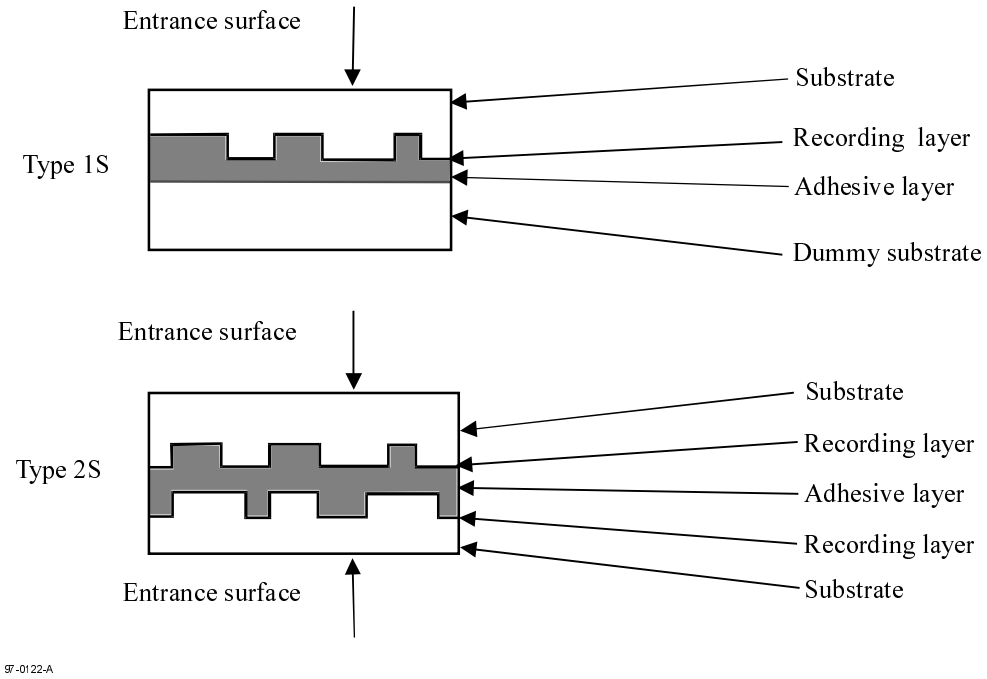

Figure 1 - Types of 120 mm DVD-RAM disks

8 General requirements

8.1 Environments

8.1.1 Test environment

In the test environment, the air immediately surrounding the disk shall have the following properties.

Temperature	: 23 °C ± 2 °C
Relative humidity	: 50 % ± 5 %
Atmospheric pressure	: 86 kPa to 106 kPa

No condensation on or in the disk shall occur. Before testing, the disk shall be conditioned in this environment for 48 hours minimum. It is recommended that, before testing, the entrance surface of the optical disk shall be cleaned according to the instructions of the manufacturer of the disk.

Unless otherwise stated, all tests and measurements shall be made in this test environment.

8.1.2 Operating environment

This International Standard requires that a disk which meets all requirements of this International Standard in the specified test environment shall provide data interchange over the specified ranges of environmental parameters in the operating environment.

The operating environment is the environment where the air immediately surrounding the disk has the following properties.

Temperature	: 5 °C to 60 °C
Relative humidity	: 3 % to 85 %
Absolute humidity	: 1 g/m^3 to 30 g/m^3
Temperature gradient	: 10 °C/h max.
Relative humidity gradient	: 10 %/h max.

No condensation on the disk shall occur. If the disk has been exposed to conditions outside those specified above, it shall be acclimatized in the operating environment for at least 2 h before use.

Copyright International Organization for Standardization
Provided by IHS under license with ISO
No reproduction or networking permitted without license from IHS Not for Resale

8.1.3 Storage environment

The storage environment is defined as an environment where the air immediately surrounding the disk shall have the following properties.

Temperature	: -10 °C to 50 °C
Relative humidity	: 3 % to 85 %
Absolute humidity	: 1 g/m^3 to 30 g/m^3
Atmospheric pressure	: 75 kPa to 106 kPa
Temperature gradient	: 10 °C/h max.
Relative humidity gradient	: 10 %/h max.

No condensation on the disk shall occur.

8.1.4 Transportation

This International Standard does not specify requirements for transportation; guidance is given in annex K.

8.2 Safety requirement

The optical disk shall satisfy the safety requirements of IEC 950, when used in the intended manner or in any foreseeable use in an information processing system.

8.3 Flammability

The disk shall be made from materials that comply with the flammability class for HB materials, or better, as specified in IEC 950.

9 Reference Drive

The Reference Drive shall be used for the measurement of optical parameters for conformance with the requirements of this International Standard. The critical components of this device have the characteristics specified in this clause.

9.1 Optical Head

The basic set-up of the optical system of the Reference Drive used for measuring the overwrite and read parameters are shown in figure 2. Different components and locations of components are permitted, provided that the performance remains the same as that of the set-up in figure 2. The optical system shall be such that the detected light reflected from the entrance surface of the disk is minimized so as not to influence the accuracy of the measurements.

--`,,```,,,,````-`-`,,`,,`,`,,`---

Copyright International Organization for Standardization
Provided by IHS under license with ISO
No reproduction or networking permitted without license from IHS Not for Resale

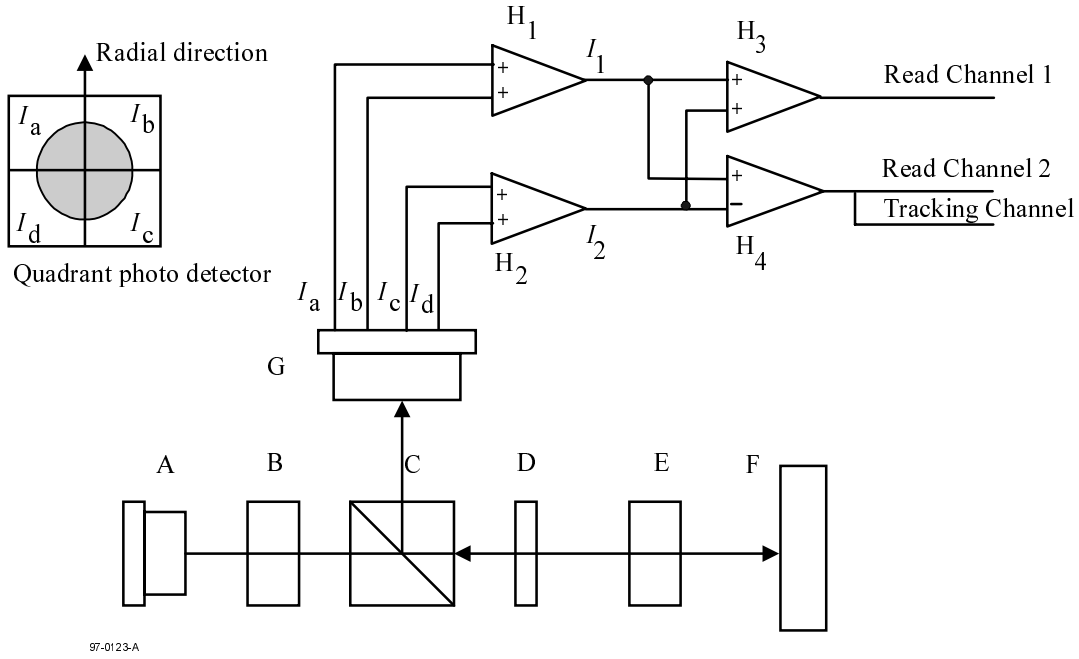

A	Laser diode	F	Optical disk
B	Collimator lens	G	Quadrant photo detector
C	Polarizing beam splitter	H_1, H_2, H_3, H_4	d.c.-coupled amplifier
D	Quarter-wave plate	I_a, I_b, I_c, I_d	Output currents from the quadrant photo detector
E	Objective lens		

Figure 2 - Optical system of the Reference Drive

The combination of polarizing beam splitter C and a quarter-wave plate D shall separate the entrance optical beam from a laser diode A and the reflected optical beam from an optical disk F. The beam splitter C shall have a p-s intensity reflectance ratio of at least 100.

The focused optical beam used for writing and reading data shall have the following properties :

a) Wavelength (λ)	650 $^{+10\ nm}_{-5\ nm}$
a) Polarization	circularly polarized light
b) Polarizing beam splitter	shall be used unless otherwise stated.
c) Numerical aperture	0,60 ± 0,01
d) Light intensity at the rim of the pupil of the objective lens	30 % to 55 % of the maximum intensity level
a) Wave front aberration	0,033 λ rms max.

b) Relative Intensity Noise (RIN) of the laser diode
10 log [(a.c. power density/Hz) / d.c. light power] -134 dB/Hz max.

9.2 Read channels

A Read channel 1 shall detect the total amount of light in the exit pupil of the objective lens.
A Read channel 2 shall detect the differential output of the quadrant photo detectors.
Frequency characteristics of the equalizer, characteristics of the PLL, slicer etc. are specified in annex F.

9.3 Rotation speed

The actual rotation speed shall be within 1 % of the nominal rotation speed(s) specified in table 3.

Copyright International Organization for Standardization
Provided by IHS under license with ISO
No reproduction or networking permitted without license from IHS Not for Resale

9.4 Disk clamping

Clamping force : 2,0 N ± 0,5 N

Tapered cone angle : 40,0° ± 0,5° (see annex E)

9.5 Normalized servo transfer function

In order to specify the servo system for axial and radial tracking, a function H_s is used (equation I). It specifies the nominal values of the open-loop transfer function H of the Reference Servo(s) in the frequency range 23,1 Hz to 10 kHz.

$$H_s(\mathrm{i}\omega) = \frac{1}{3} \times \left(\frac{\omega_o}{\mathrm{i}\omega} \right)^2 \times \frac{1 + \frac{3\mathrm{i}\omega}{\omega_o}}{1 + \frac{\mathrm{i}\omega}{3\omega_o}} \qquad \text{(I)}$$

where

$\omega = 2\pi f$

$\omega_o = 2\pi f_o$

$\mathrm{i} = \sqrt{-1}$

f_o is the 0 dB crossover frequency of the open loop transfer function. The crossover frequencies of the lead-lag network of the servo are given by

lead break frequency $f_1 = f_o \times 1/3$
lag break frequency $f_2 = f_o \times 3$

9.6 Reference Servo for axial tracking

For an open loop transfer function H of the Reference Servo for axial tracking, $|1+H|$ is limited as schematically shown by the shaded surface of figure 3.

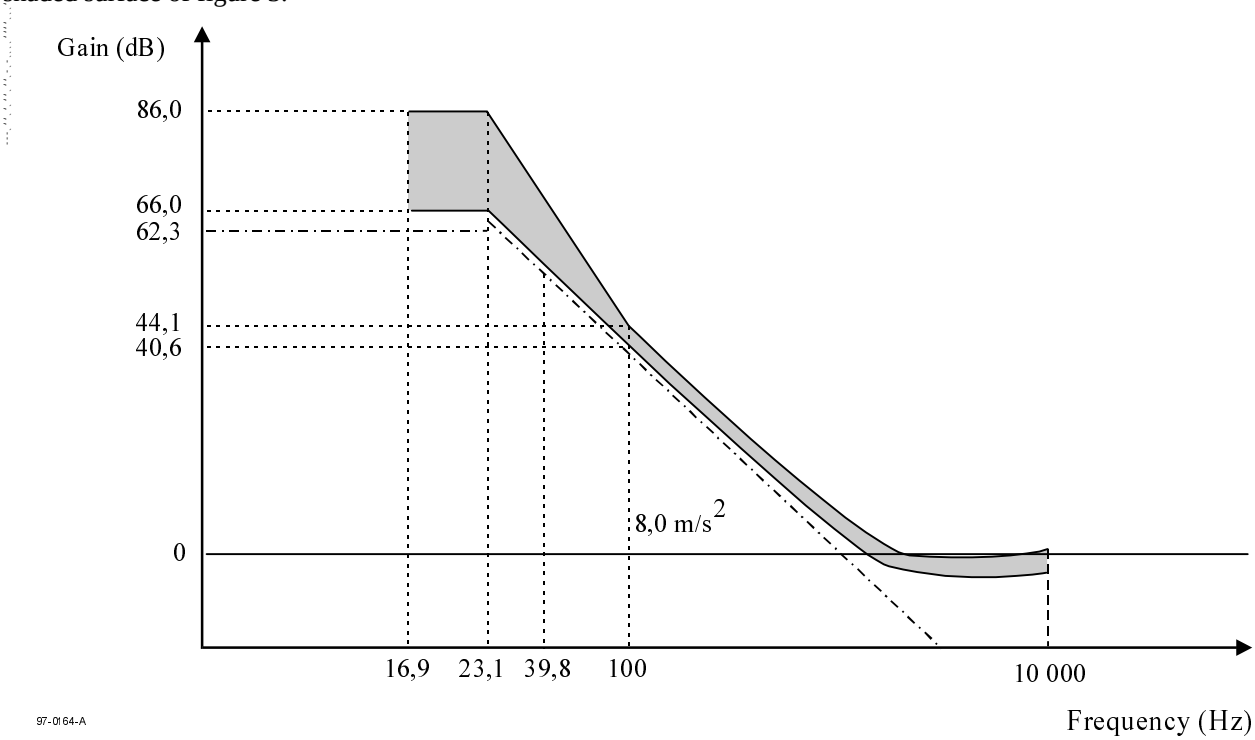

Figure 3 - Reference Servo for axial tracking

Copyright International Organization for Standardization
Provided by IHS under license with ISO
No reproduction or networking permitted without license from IHS
Not for Resale

Bandwidth 100 Hz to 10 kHz

$|1 + H|$ shall be within 20 % of $|1+H_s|$.

The crossover frequency $f_o = \omega_o / 2\pi$ shall be specified by equation (II), where $\alpha_{max.}$ shall be 1,5 times larger than the expected maximum axial acceleration of 8 m/s^2. The tracking error $e_{max.}$ shall not exceed 0,23 µm. Thus the crossover frequency f_o shall be

$$f_0 = \frac{1}{2\pi}\sqrt{\frac{3\,\alpha_{max}}{e_{max}}} = \frac{1}{2\pi}\sqrt{\frac{8\times 1{,}5\times 3}{0{,}23\times 10^{-6}}} = 2{,}0 \text{ kHz} \qquad \text{(II)}$$

The axial tracking error $e_{max.}$ is the peak deviation measured axially above or below the 0 level.

Bandwidth 23,1 Hz to 100 Hz

$|1 + H|$ shall be within the limits defined by the following four points.

40,6 dB at 100 Hz	($|1 + Hs|$ - 20% at 100 Hz)
66,0 dB at 23,1 Hz	($|1 + Hs|$ - 20% at 23,1 Hz)
86,0 dB at 23,1 Hz	($|1 + Hs|$ - 20% at 23,1 Hz add 20 dB)
44,1 dB at 100 Hz	($|1 + Hs|$ + 20% at 100 Hz)

Bandwidth 16,9 Hz to 23,1 Hz

$|1 + H|$ shall be between 66,0 dB and 86,0 dB.

9.7 Reference Servo for radial tracking

For an open-loop transfer function H of the Reference Servo for radial tracking, $|1+H|$ is limited as schematically shown by the shaded surface of figure 4.

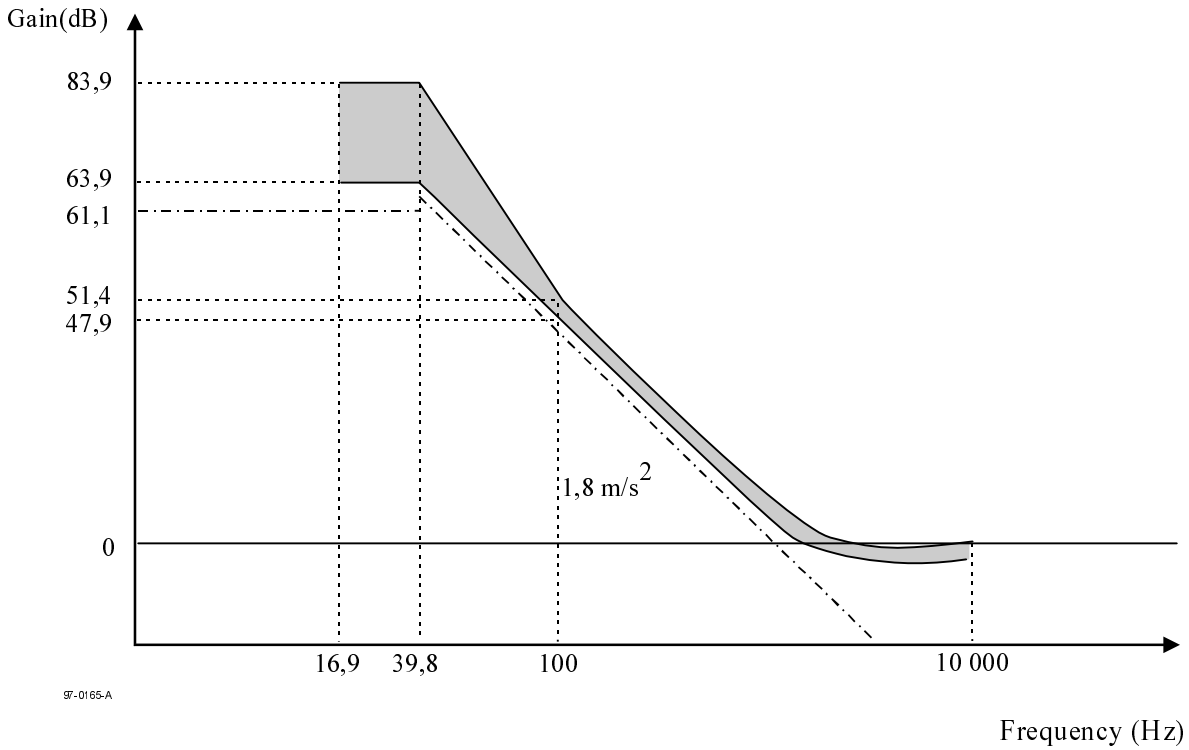

Figure 4 - Reference Servo for radial tracking

Copyright International Organization for Standardization
Provided by IHS under license with ISO
No reproduction or networking permitted without license from IHS
Not for Resale

Bandwidth from 100 Hz to 10 kHz

$|1 + H|$ shall be within 20 % of $|1 + H_s|$.

The crossover frequency $f_o = \omega_o / 2\pi$ shall be specified by equation (III), where $\alpha_{max.}$ shall be 1,5 times larger than the expected maximum radial acceleration of 1,8 m/s^2. The tracking error $e_{max.}$ shall not exceed 0,022 µm. Thus the crossover frequency f_o shall be

$$f_0 = \frac{1}{2\pi}\sqrt{\frac{3\,\alpha_{max}}{e_{max}}} = \frac{1}{2\pi}\sqrt{\frac{1{,}8 \times 1{,}5 \times 3}{0{,}022 \times 10^{-6}}} = 3{,}0 \text{ kHz} \qquad \text{(III)}$$

The radial tracking error is the peak deviation measured radially inwards or outwards the 0 level.

Bandwidth from 39,8 Hz to 100 Hz

$|1 + H|$ shall be within the limits defined by the following four points.

47,9 dB at 100 Hz	($|1 + Hs|$ - 20% at 100 Hz)
63,9 dB at 39,8 Hz	($|1 + Hs|$ - 20% at 39,8 Hz)
83,9 dB at 39,8 Hz	($|1 + Hs|$ - 20% at 39,8 Hz add 20 dB)
51,4 dB at 100 Hz	($|1 + Hs|$ + 20% at 100 Hz)

Bandwidth from 16,9 Hz to 39,8 Hz

$|1 + H|$ shall be between 63,9 dB and 83,9 dB.

Section 2 - Dimensional, mechanical and physical characteristics of the disk

10 Dimensional characteristics

Dimensional characteristics are specified for those parameters deemed mandatory for interchange and compatible use of the disk. Where there is freedom of design, only the functional characteristics of the elements described are indicated. The enclosed drawings show the dimensional requirements in summarized form. The different parts of the disk are described from the centre hole to the outside rim.

The dimensions are referred to two Reference Planes P and Q.

Reference Plane P is the primary Reference Plane. It is the plane on which the bottom surface of the Clamping Zone (see 10.4) rests.

Reference Plane Q is the plane parallel to Reference Plane P at the height of the top surface of the Clamping Zone.

See figures 5 to 7.

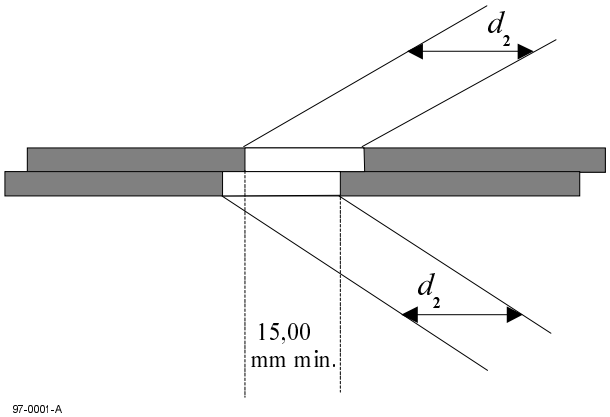

Figure 5 - Hole of the assembled disk

Copyright International Organization for Standardization
Provided by IHS under license with ISO
No reproduction or networking permitted without license from IHS
Not for Resale

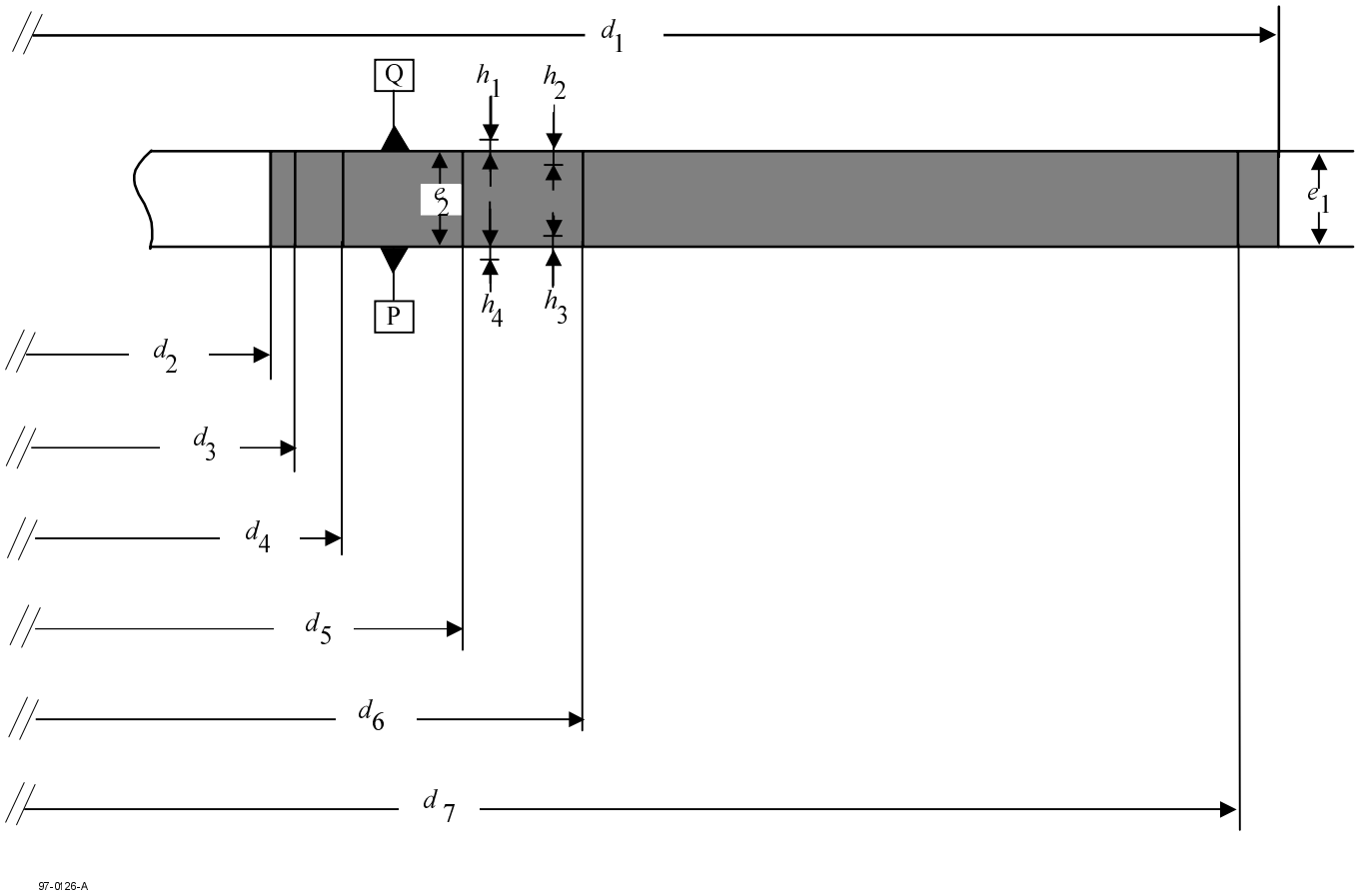

Figure 6 - Areas of the disk

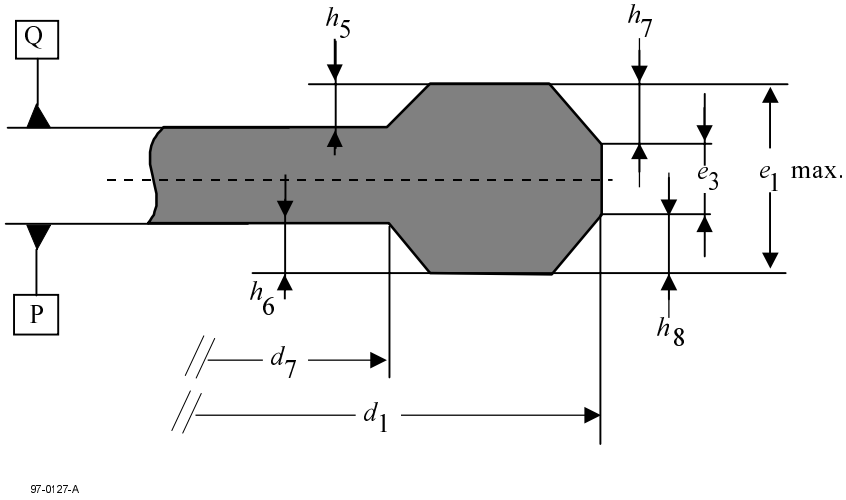

Figure 7 - Rim area

10.1 Overall dimensions

The disk shall have an overall diameter

d_1 = 120,00 mm ± 0,30 mm

The centre hole of a substrate or a dummy substrate shall have a diameter

$d_2 = 15{,}00\ \text{mm}\ ^{+\ 0{,}15\ \text{mm}}_{-\ 0{,}00\ \text{mm}}$

Copyright International Organization for Standardization
Provided by IHS under license with ISO
No reproduction or networking permitted without license from IHS Not for Resale

The diameter of the hole of an assembled disk, i.e. with both parts bonded together, shall be 15,00 mm min., see figure 5.

There shall be no burr on both edges of the centre hole.

The edge of the centre hole shall be rounded off or chamfered. The rounding radius shall be 0,1 mm max. The height of the chamfer shall not exceed 0,1 mm.

The thickness of the disk, including adhesive layer, spacer(s) and label(s), shall be

$$e_1 = 1{,}20 \text{ mm} \begin{matrix} +\ 0{,}30 \text{ mm} \\ -\ 0{,}06 \text{ mm} \end{matrix}$$

10.2 First transition area

In the area extending between diameter d_2 and diameter

$d_3 = 16{,}0$ mm min.

the surface of the disk is permitted to be above Reference Plane P and/or below Reference Plane Q by 0,10 mm max.

10.3 Second transition area

This area shall extend between diameter d_3 and diameter

$d_4 = 22{,}0$ mm max.

In this area the disk may have an uneven surface or burrs up to 0,05 mm max. beyond Reference Planes P and/or Q.

10.4 Clamping Zone

This zone shall extend between diameter d_4 and diameter

$d_5 = 33{,}0$ mm min.

Each side of the Clamping Zone shall be flat within 0,1 mm. The top side of the Clamping Zone, i.e. that of Reference Plane Q shall be parallel to the bottom side, i.e. that of Reference Plane P within 0,1 mm.

In the Clamping Zone the thickness e_2 of the disk shall be

$$e_2 = 1{,}20 \text{ mm} \begin{matrix} +\ 0{,}20 \text{ mm} \\ -\ 0{,}10 \text{ mm} \end{matrix}$$

10.5 Third transition area

This area shall extend between diameter d_5 and diameter

$d_6 = 44{,}0$ mm max.

In this area the top surface is permitted to be above Reference Plane Q by

$h_1 = 0{,}25$ mm max.

or below Reference Plane Q by

$h_2 = 0{,}10$ mm max.

The bottom surface is permitted to be above Reference Plane P by

$h_3 = 0{,}10$ mm max.

or below Reference Plane P by

$h_4 = 0{,}25$ mm max.

An Information Zone shall extend from diameter d_6 to diameter

$$d_7 = 117{,}2 \text{ mm} \begin{matrix} +\ 0{,}0 \text{ mm} \\ -\ 0{,}4 \text{ mm} \end{matrix}$$

--`,,```,,,,````-`-`,,`,,`,`,,`---

Copyright International Organization for Standardization
Provided by IHS under license with ISO
No reproduction or networking permitted without license from IHS Not for Resale

10.6 Rim area

The rim area shall extend from diameter d_7 to diameter d_1 (see figure 6). In this area the top surface is permitted to be above Reference Plane Q by

h_5 = 0,1 mm max.

and the bottom surface is permitted to be below Reference Plane P by

h_6 = 0,1 mm max.

The total thickness of this area shall not be greater than 1,50 mm, i.e. the maximum value of e_1. The thickness of the rim proper shall be

e_3 = 0,6 mm min.

The outer edges of the disk shall be either rounded off with a rounding radius of 0,2 mm max. or be chamfered over

h_7 = 0,2 mm max.

h_8 = 0,2 mm max.

10.7 Remark on tolerances

All heights specified in the preceding clauses and indicated by h_i are independent from each other. This means that, for example, if the top surface of the third transition area is below Reference Plane Q by up to h_2, there is no implication that the bottom surface of this area has to be above Reference Plane P by up to h_3. Where dimensions have the same - generally maximum - numerical value, this does not imply that the actual values have to be identical.

10.8 Label

Type 1S disks not enclosed in a case of Type 1 shall have a label placed on the side of the disk opposite the entrance surface for the information to which the label is related. The label shall be placed either on an outer surface of the disk or inside the disk bonding plane. In the former case, the label shall not extend over the Clamping Zone. In the latter case, the label may extend over the Clamping Zone. In both cases, the label shall not extend over the rim of the centre hole nor over the outer edge of the disk.

11 Mechanical characteristics

11.1 Mass

The mass of the disk shall be in the range 13 g to 20 g.

11.2 Moment of inertia

The moment of inertia of the disk, relative to its rotation axis, shall not exceed 0,040 g·m^2.

11.3 Dynamic imbalance

The dynamic imbalance of the disk, relative to its rotation axis, shall not exceed 0,010 g·m.

11.4 Sense of rotation

The sense of rotation of the disk shall be counterclockwise as seen by the optical system.

11.5 Runout

11.5.1 Axial runout

When measured by the Optical Head with the Reference Servo for axial tracking, the disk rotating at the scanning velocity, the deviation of the recorded layer from its nominal position in the direction normal to the Reference Planes shall not exceed 0,3 mm.

The residual tracking error below 10 kHz, measured using the Reference Servo for axial tracking, shall not exceed 0,23 µm. The measuring filter shall be a Butterworth LPF, f_c (-3dB) : 10 kHz, slope : -80 dB/decade.

11.5.2 Radial runout

The runout of the outer edge of the disk shall not exceed 0,3 mm, peak-to-peak.

The radial runout of tracks shall not exceed 50 µm, peak-to-peak.

Copyright International Organization for Standardization
Provided by IHS under license with ISO
No reproduction or networking permitted without license from IHS Not for Resale

The residual tracking error below 1,7 kHz, measured using the Reference Servo for radial tracking, shall not exceed 0,022 µm. The measuring filter shall be a Butterworth LPF, f_c (-3dB) : 1,7 kHz, slope : -80 dB/decade.

The rms noise value of the residual error signal in the frequency band from 1,7 kHz to 10 kHz, measured with an integration time of 20 ms, using the Reference Servo for radial tracking, shall not exceed 0,016 µm in the Rewritable Area and shall not exceed 0,025 µm in the Embossed Area (refer to clause 13). The measuring filter shall be a Butterworth BPF, frequency range (-3 dB) : 1,7 kHz, slope : +80 dB/decade to 10 kHz, slope : - 80 dB/decade.

12 Optical characteristics

12.1 Index of refraction

The index of refraction of the transparent substrate shall be 1,55 ± 0,10.

12.2 Thickness of the transparent substrate

The thickness of the transparent substrate shall be a function of its index of refraction as specified in figure 8.

12.3 Angular deviation

The angular deviation is the angle α between a parallel incident beam and the reflected beam. The incident beam shall have a diameter in the range 0,3 mm to 3,0 mm. This angle includes deflection due to the entrance surface and to unparallelism of the recorded layer, see figure A.1. It shall meet the following requirements when measured according to annex A.

In radial direction : α = 0,70° max.

In tangential direction : α = 0,30° max.

12.4 Birefringence of the transparent substrate

The birefringence of the transparent substrate shall be 60 nm max. when measured according to annex B.

12.5 Reflectivity

When measured according to annex D, the reflectivity of the recorded layer(s) shall be in the range 15 % to 25 %.

Copyright International Organization for Standardization
Provided by IHS under license with ISO
No reproduction or networking permitted without license from IHS Not for Resale

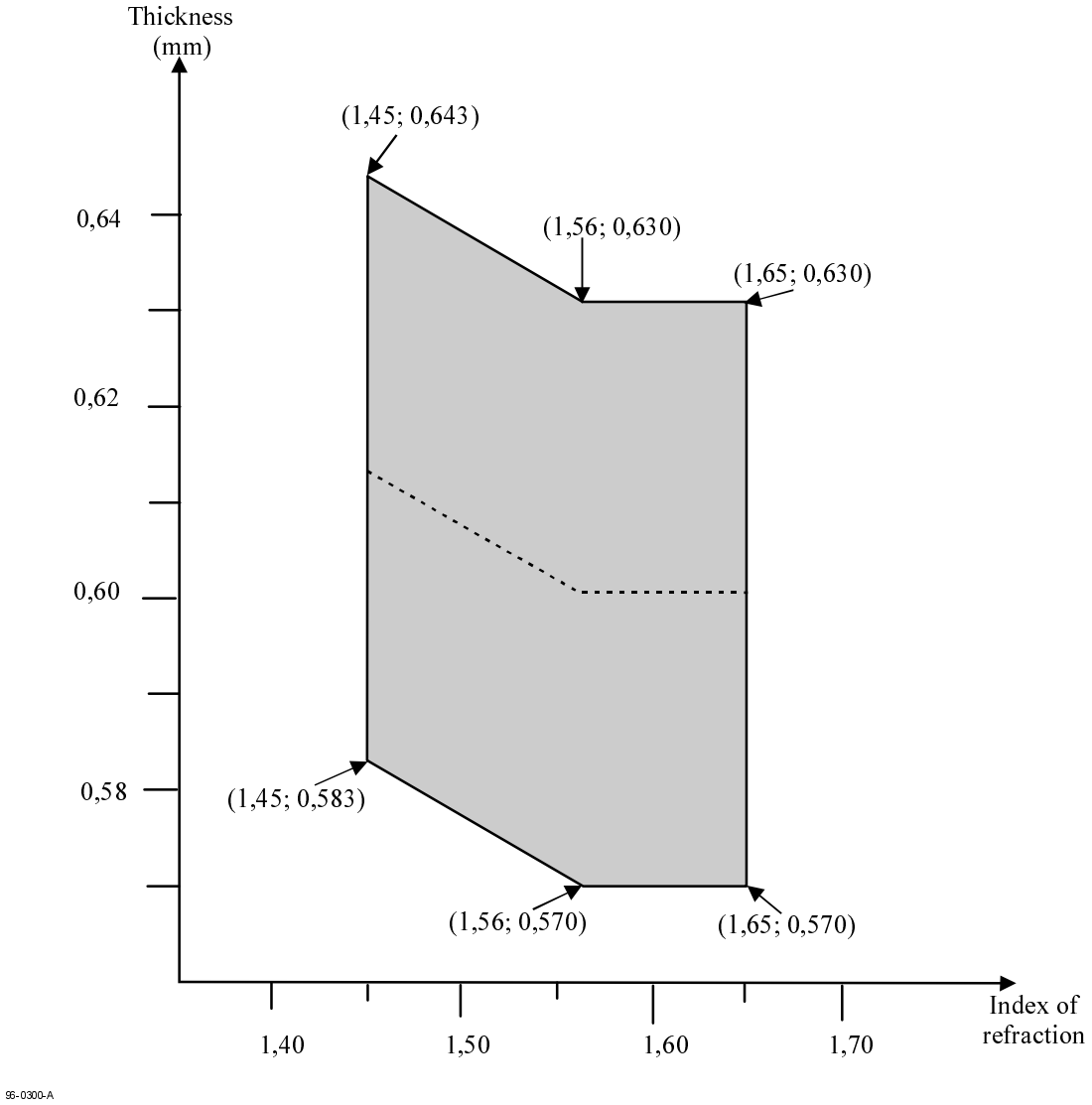

Figure 8 - Thickness of the substrate

Section 3 - Format of information

13 Data format

The data received from the host, called Main Data, is formatted in a number of steps before being recorded on the disk. It is transformed successively into

- a Data Frame
- a Scrambled Frame
- an ECC Block
- a Recording Frame
- a Recorded Data Field

These steps are specified in the following clauses.

13.1 Data Frames

A Data Frame shall consist of 2 064 bytes arranged in an array of 12 rows containing each 172 bytes (see figure 9). The first row shall start with three fields, called Data Identification Data (Data ID), ID Error Detection Code (IED), and Reserved bytes (RSV), followed by 160 Main Data bytes. The next 10 rows shall each contain 172 Main Data bytes, and the last row shall contain 168 Main Data bytes followed by four bytes for recording an Error Detection Code (EDC). The 2 048 Main Data bytes are identified as D_0 to D_{2047}.

Copyright International Organization for Standardization
Provided by IHS under license with ISO
No reproduction or networking permitted without license from IHS Not for Resale

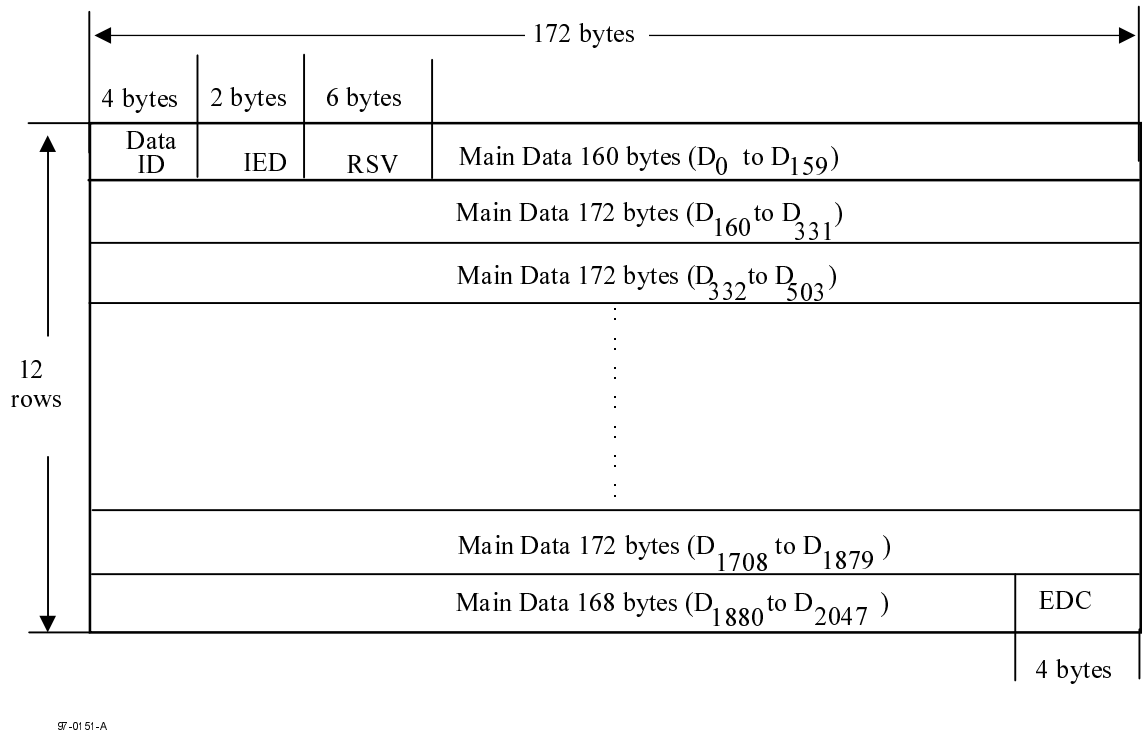

Figure 9 - Data Frame

13.1.1 Data ID

This field shall consist of four bytes, the bits of which are numbered consecutively from b_0 (lsb) to b_{31} (msb), see figures 10 and 11.

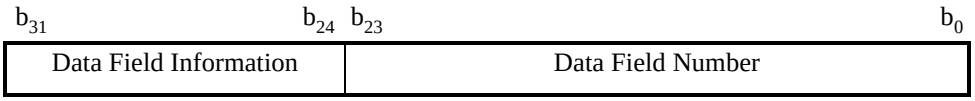

Figure 10 - Data ID

b_{31}	b_{30}	b_{29}	b_{28}	b_{27}	b_{26}	b_{25}	b_{24}
Sector Format type	Tracking method	Reflectivity	Reserved	Zone type		Data type	Layer number

Figure 11 - Data Field Information

The bits of the Data Field Information field shall be set as follows.

Bit b_{31} shall be set to ONE, indicating Zoned format type

Bit b_{30} shall be set to

ZERO in the Embossed Area, indicating pit tracking (see 16.1)
ONE in the Rewritable Area, indicating groove tracking (see 16.1)

Bit b_{29} shall be set to ONE, indicating that the reflectivity does not exceed 40 %

Bit b_{28} shall be set to ZERO

Copyright International Organization for Standardization
Provided by IHS under license with ISO
No reproduction or networking permitted without license from IHS
Not for Resale

Bits b_{27} and b_{26}	shall be set to ZERO ZERO in the Data Zone ZERO ONE in the Lead-in Zone ONE ZERO in the Lead-out Zone
Bit b_{25}	shall be set to ZERO in the Embossed Area. ONE in the Rewritable Area
Bit b_{24}	shall be set to ZERO, indicating that through an entrance surface only one recording layer can be accessed.
Bits b_{23} to b_0	shall be set to – to the sector number in the Embossed Area (see 16.1), in the DMAs.(see 17.1)and in the Reserved Zones of the Lead-in Zone (see 16.2) and of the Lead-out Zone (see 16.4), – to the values specified in 17.8.4 in the Data Zone (see 16.3),

Other settings are prohibited by this International Standard, see also annex L.

13.1.2 Data ID Error Detection code (IED)

When identifying all bytes of the array shown in figure 9 as $C_{i,j}$ for i = 0 to 11 and j = 0 to171, the bytes of IED are represented by $C_{0,j}$ for j = 4 to 5. Their setting is obtained as follows.

$$IED(x) = \sum_{j=4}^{5} C_{0,j}\, x^{5-j} \quad = \quad I(x)\, x^2 \mod G_E(x)$$

where

$$I(x) = \sum_{j=0}^{3} C_{0,j}\, x^{3-j}$$

$$G_E(x) = \prod_{k=0}^{1} (x + \alpha^k)$$

α is the primitive root of the primitive polynomial $P(x) = x^8 + x^4 + x^3 + x^2 + 1$

13.1.3 Reserved bytes

All the bytes of this 6-byte field shall be set to (00).

13.1.4 Error Detection Code (EDC)

This 4-byte field shall contain an Error Detection Code computed over the preceding 2 060 bytes of the Data Frame. Considering the Data Frame as a single bit field starting with the most significant bit of the first byte of the ID field and ending with the least significant bit of the EDC field, then this msb will be $b_{16\,511}$ and the lsb will be b_0. Each bit b_i of the EDC is as follows for i = 31 to 0 :

$$EDC(x) = \sum_{i=31}^{0} b_i\, x^i \quad = \quad I(x) \mod G(x)$$

where

$$I(x) = \sum_{i=16\,511}^{32} b_i\, x^i$$

$$G(x) = x^{32} + x^{31} + x^4 + 1$$

Copyright International Organization for Standardization
Provided by IHS under license with ISO
No reproduction or networking permitted without license from IHS Not for Resale

13.2 Scrambled Frames

The 2 048 Main Data bytes shall be scrambled by means of the circuit shown in figure 12 which shall consist of a feedback bit shift register in which bits r_7 (msb) to r_0 (lsb) represent a scrambling byte at each 8-bit shift. At the beginning of the scrambling procedure of a Data Frame, positions r_{14} to r_0 shall be pre-set to the value(s) specified in table 3. The same pre-set value shall be used for 16 consecutive Data Frames. After 16 groups of 16 Data Frames, the sequence is repeated. The initial pre-set number is equal to the value represented by bits b_7 (msb) to bit b_4 (lsb) of the Data ID field of the Data Frame. Table 1 specifies the initial pre-set value of the shift register corresponding to the 16 initial pre-set numbers.

Table 1 - Initial values of the shift register

Initial pre-set number	Initial pre-set value	Initial pre-set number	Initial pre-set value
(0)	(0001)	(8)	(0010)
(1)	(5500)	(9)	(5000)
(2)	(0002)	(A)	(0020)
(3)	(2A00)	(B)	(2001)
(4)	(0004)	(C)	(0040)
(5)	(5400)	(D)	(4002)
(6)	(0008)	(E)	(0080)
(7)	(2800)	(F)	(0005)

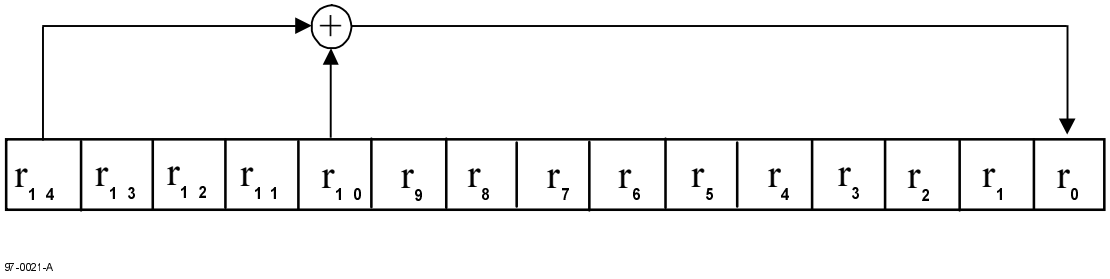

Figure 12 - Feedback shift register

The part of the initial value of r_7 to r_0 is taken out as scrambling byte S_0. After that, 8-bit shift is repeated 2 047 times and the following 2 047 bytes shall be taken from r_7 to r_0 as scrambling bytes S_1 to $S_{2\ 047}$. The Main Data bytes D_k of the Data Frame become scrambled bytes D'_k where

$D'_k = D_k \oplus S_k$ for k = 0 to 2 047

$\oplus$ stands for Exclusive OR

13.3 ECC Blocks

An ECC Block is formed by arranging 16 consecutive Scrambled Frames in an array of 192 rows of 172 bytes each (see figure 13). To each of the 172 columns, 16 bytes of Parity of Outer Code are added, then, to each of the resulting 208 rows, 10 byte of Parity of Inner Code are added. Thus a complete ECC Block comprises 208 rows of 182 bytes each. The bytes of this array are identified as $B_{i,j}$ as follows, where i is the row number and j the column number.

$B_{i,j}$ for i = 0 to 191 and j = 0 to 171 are bytes from the Scrambled Frames

$B_{i,j}$ for i = 192 to 207 and j = 0 to 171 are bytes of the Parity of Outer Code

$B_{i,j}$ for i = 0 to 207 and j = 172 to 181 are bytes of the Parity of Inner Code

Copyright International Organization for Standardization
Provided by IHS under license with ISO
No reproduction or networking permitted without license from IHS
Not for Resale

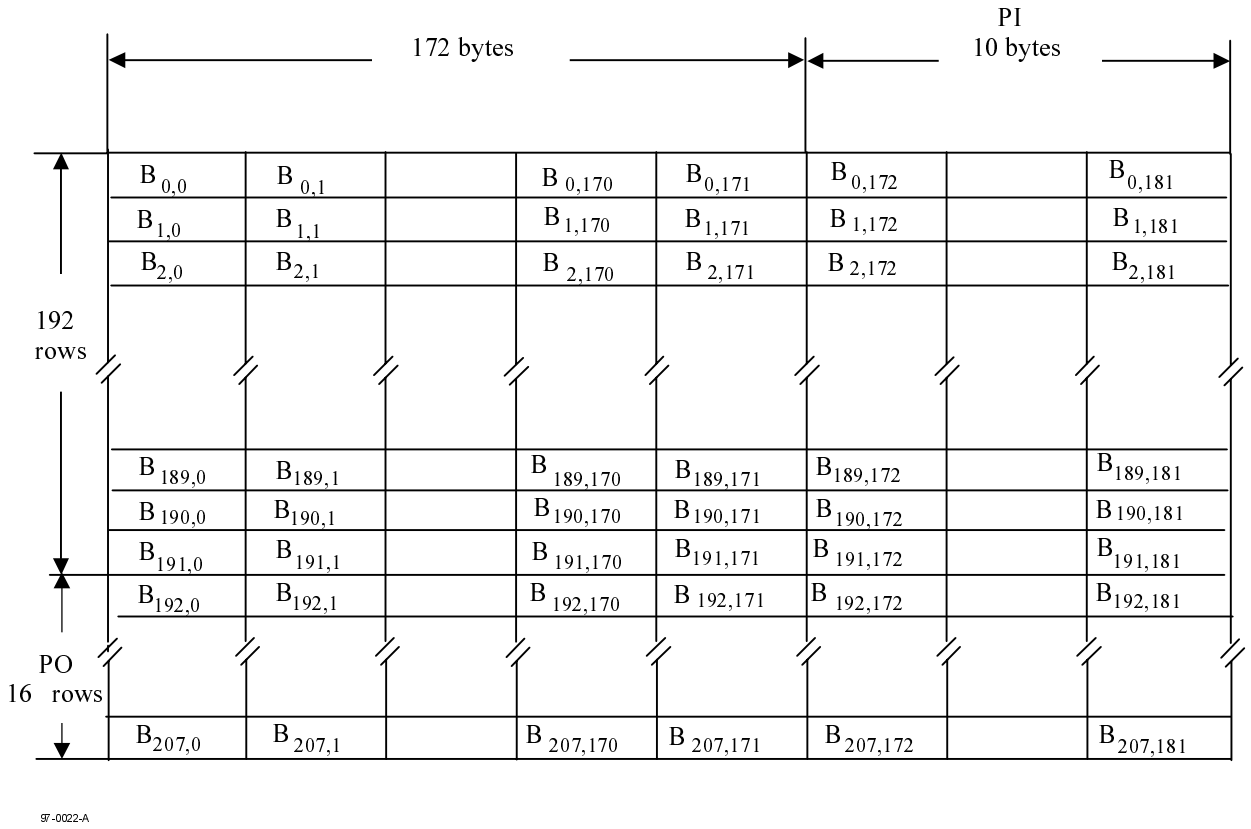

Figure 13 - ECC Block configuration

The PO and PI bytes shall be obtained as follows.

In each of columns j = 0 to 171, the 16 PO bytes are defined by the remainder polynomial $R_j(x)$ to form the outer code RS (208,192,17).

$$R_j(x) = \sum_{i=192}^{207} B_{i,j}\, x^{207-i} = I_j(x)\, x^{16} \mod G_{PO}(x)$$

where

$$I_j(x) = \sum_{i=0}^{191} B_{i,j}\, x^{191-i}$$

$$G_{PO}(x) = \prod_{k=0}^{15} (x + \alpha^k)$$

In each of rows i = 0 to 207, the 10 PI bytes are defined by the remainder polynomial $R_i(x)$ to form the inner code RS (182,172,11).

$$R_i(x) = \sum_{j=172}^{181} B_{i,j}\, x^{181-j} = I_i(x)\, x^{10} \mod G_{PI}(x)$$

Copyright International Organization for Standardization
Provided by IHS under license with ISO
No reproduction or networking permitted without license from IHS
Not for Resale

where

$$I_i(x) = \sum_{j=0}^{171} B_{i,j}\, x^{171-j}$$

$$G_{PI}(x) = \prod_{k=0}^{9} (x + \alpha^k)$$

α is the primitive root of the primitive polynomial $P(x) = x^8 + x^4 + x^3 + x^2 + 1$

13.4 Recording Frames

Sixteen Recording Frames shall be obtained by interleaving one of the 16 PO rows at a time after every 12 rows of an ECC Block (figure 13). This is achieved by re-locating the bytes $B_{i,j}$ of the ECC Block as $B_{m,n}$ for

$m = i + int[i / 12]$ and $n = j$ for $i \leq 191$

$m = 13 (i - 191) - 1$ and $n = j$ for $i \geq 192$

where *int*[x] represents the largest integer not greater than x.

Thus the 37 856 bytes of an ECC Block are re-arranged into 16 Recording Frames of 2 366 bytes. Each Recording Frame consists of an array of 13 rows of 182 bytes (see figure 14).

Copyright International Organization for Standardization
Provided by IHS under license with ISO
No reproduction or networking permitted without license from IHS Not for Resale

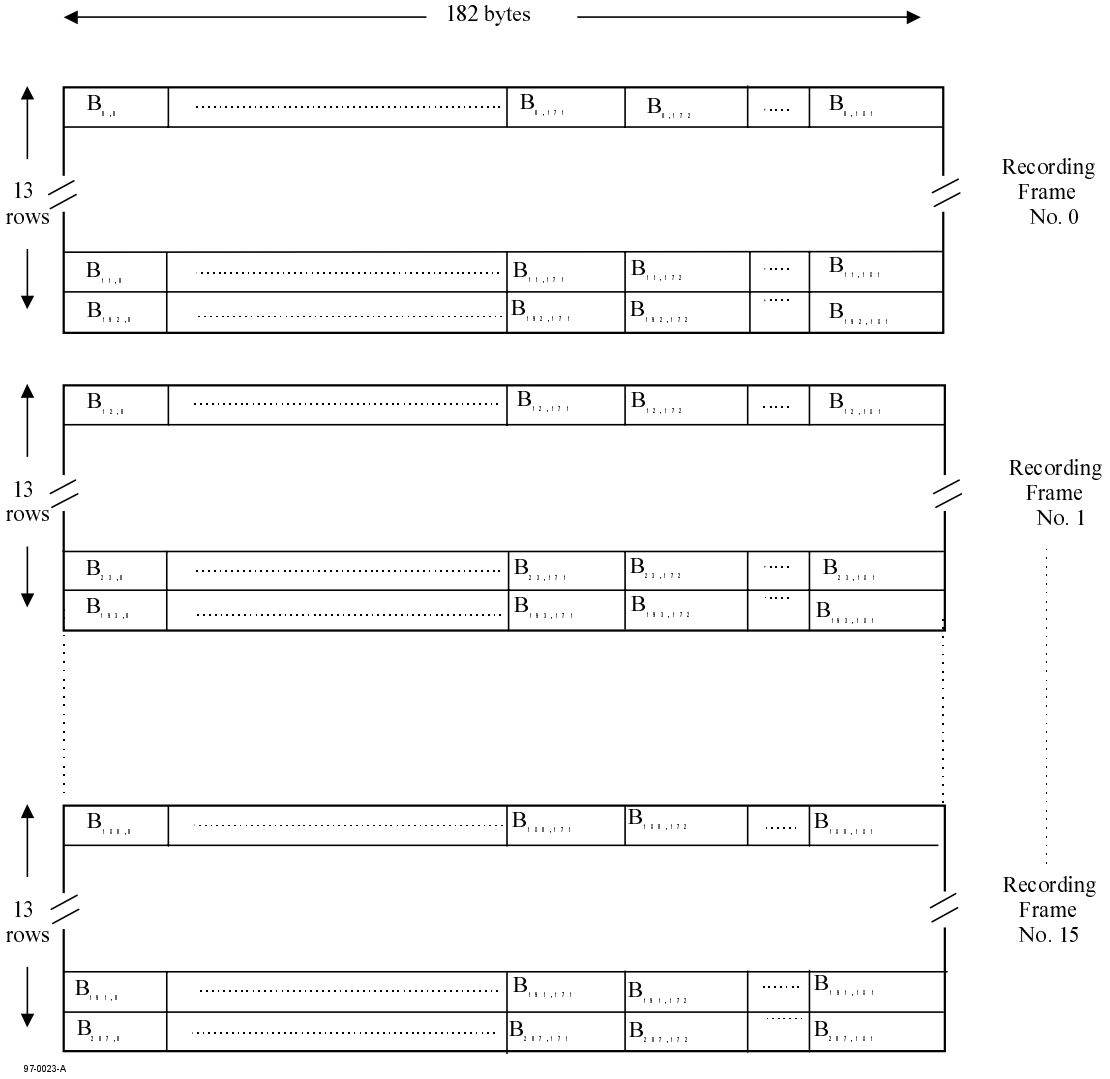

Figure 14 - Recording Frames obtained from an ECC Block

13.5 Recording code and NRZI conversion

The 8-bit bytes of each Recording Frame shall be transformed into 16-bit Code Words with the run length limitation that between 2 ONEs there shall be at least 2 ZEROs and at most 10 ZEROs (RLL 2,10). Annex G specifies the conversion tables to be applied. The Main Conversion table and the Substitution table specify a 16-bit Code Word for each 8-bit bytes with one of 4 States. For each 8-bit byte, the tables indicate the corresponding Code Word, as well as the State for the next 8-bit byte to be encoded.

The 16-bit Code Words shall be NRZI-converted into Channel bits before recording on the disk. (figure 15).

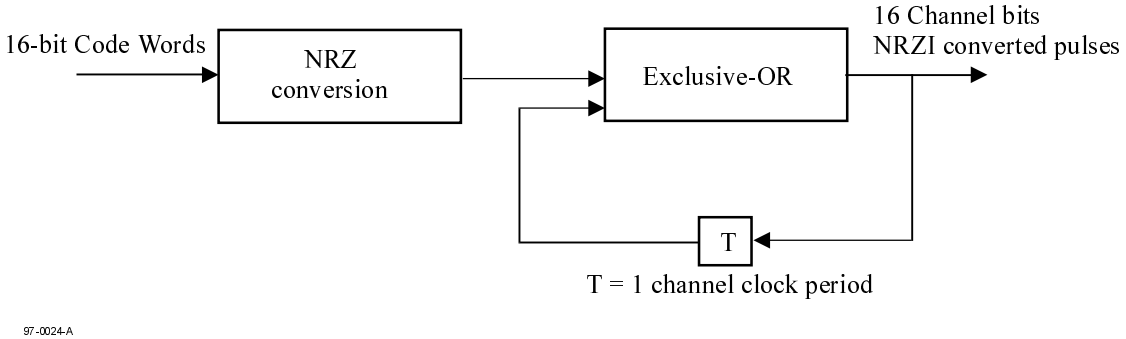

Figure 15 - NRZI conversion

Copyright International Organization for Standardization
Provided by IHS under license with ISO
No reproduction or networking permitted without license from IHS
Not for Resale

13.6 Recorded Data Field

The structure of a Recorded Data Field is shown in figure 16. It shall consist of 13 rows, each comprising two Sync Frames. A Sync Frame shall consist of a SYNC Code from table 2 and 1 456 Channel bits representing the first, respectively the second 91 8-bit bytes of a row of a Recording Frame. The first row of the Recording Frame is represented by the first row of the Recorded Data Field, the second by the second, and so on.

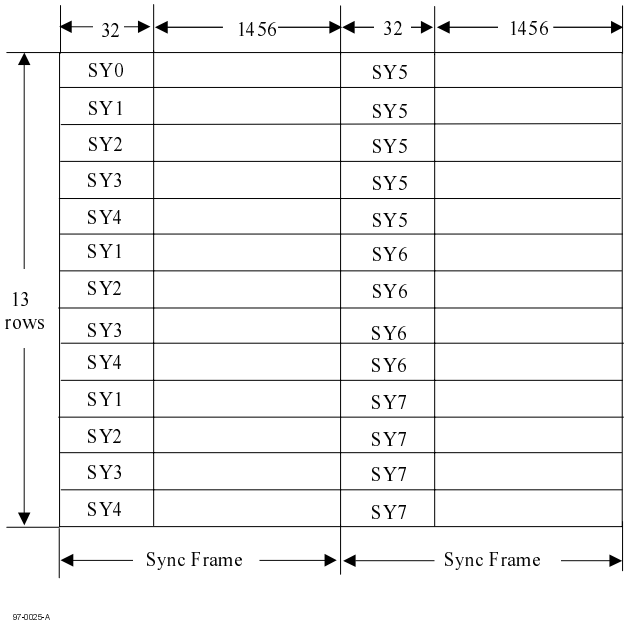

Figure 16 - Recorded Data Field

Recording shall start with the first Sync Frame of the first row, followed by the second Sync Frame of that row, and so on row-by-row.

For the selection of the Primary and Secondary SYNC Codes, see 13.7.

Copyright International Organization for Standardization
Provided by IHS under license with ISO
No reproduction or networking permitted without license from IHS
Not for Resale

Table 2 - SYNC Codes

State 1 and State 2					
	Primary SYNC codes			Secondary SYNC codes	
	(msb)	(lsb)	(msb)		(lsb)
SY0 =	0001001001000100	0000000000010001	/	0001001000000100	0000000000010001
SY1 =	0000010000000100	0000000000010001	/	0000010001000100	0000000000010001
SY2 =	0001000000000100	0000000000010001	/	0001000001000100	0000000000010001
SY3 =	0000100000000100	0000000000010001	/	0000100001000100	0000000000010001
SY4 =	0010000000000100	0000000000010001	/	0010000001000100	0000000000010001
SY5 =	0010001001000100	0000000000010001	/	0010001000000100	0000000000010001
SY6 =	0010010010000100	0000000000010001	/	0010000010000100	0000000000010001
SY7 =	0010010001000100	0000000000010001	/	0010010000000100	0000000000010001
State 3 and State 4					
	Primary SYNC codes			Secondary SYNC codes	
	(msb)	(lsb)	(msb)		(lsb)
SY0 =	1001001000000100	0000000000010001	/	1001001001000100	0000000000010001
SY1 =	1000010001000100	0000000000010001	/	1000010000000100	0000000000010001
SY2 =	1001000001000100	0000000000010001	/	1001000000000100	0000000000010001
SY3 =	1000001001000100	0000000000010001	/	1000001000000100	0000000000010001
SY4 =	1000100001000100	0000000000010001	/	1000100000000100	0000000000010001
SY5 =	1000100100000100	0000000000010001	/	1000000100000100	0000000000010001
SY6 =	1001000010000100	0000000000010001	/	1000000001000100	0000000000010001
SY7 =	1000100010000100	0000000000010001	/	1000000010000100	0000000000010001

13.7 DC component suppress Control (DCC)

13.7.1 DCC for the data in the Rewritable Area

The DC component suppress Control (DCC) minimizes the absolute value of the accumulated DSV (Digital Sum Value, see 4.3).

The DCC algorithm controls the choice of SYNC codes and 16-Channel bit Code Words in each of following three cases so that DSV is minimized.

The choice shall be determined so that, for each 16-bit Code Word (or SYNC Code), the accumulated DSV is a minimum at the end of the 16-bit Code Word (or SYNC Code) to be selected.

a) Choice of the SYNC Codes between Primary or Secondary SYNC Codes.

b) For the 8-bit bytes in the range 0 to 87, the Substitution table offers an alternative 16-bit Code Word for all States.

c) For the 8-bit bytes in the range 88 to 255, when the prescribed State is 1 or 4, then the 16-bit Code Word can be chosen either from State 1 or from State 4, so as to ensure that the RLL requirement is met.

13.7.2 DCC for the data in the Embossed Area

The DC component suppress control (DCC) minimizes the absolute value of the accumulated DSV.

To ensure a reliable radial tracking and a reliable detection of the HF signals, the low frequency content of the stream of Channel bit patterns should be kept as low as possible. In order to achieve this, the Digital Sum Value shall be kept as low as possible. At the beginning of recording, the DSV shall be set to 0.

The different ways of diminishing the current value of the DSV are as follows.

a) Choice of SYNC Codes between Primary or Secondary SYNC Codes.

b) For the 8-bit bytes in the range 0 to 87, the Substitution table offers an alternative 16-bit Code Word for all States.

Copyright International Organization for Standardization
Provided by IHS under license with ISO
No reproduction or networking permitted without license from IHS Not for Resale

c) For the 8-bit bytes in the range 88 to 255, when the prescribed State is 1 or 4, then the 16-bit Code Word can be chosen either from State 1 or from State 4, so as to ensure that the RLL requirement is met.

In order to use these possibilities, two data streams, Stream 1 and Stream 2, are generated for each Sync Frame. Stream 1 shall start with the Primary SYNC Code and Stream 2 with the Secondary SYNC Code of the same category of SYNC Codes. As both streams are modulated individually, they generate a different DSV because of the difference between the bit patterns of the Primary and Secondary SYNC Codes.

In the cases b) and c), there are two possibilities to represent a 8-bit byte. The DSV of each stream is computed up to the 8-bit byte preceding the 8-bit byte for which there is this choice. The stream with the lowest $|DSV|$ is selected and duplicated to the other stream. Then, one of the representations of the next 8-bit byte is entered into Stream 1 and the other into Stream 2. This operation is repeated each time case b) or c) occurs.

Whilst case b) always occurs at the same pattern position in both streams, case c) may occur in one of the streams and not in the other because, for instance, the next State prescribed by the previous 8-bit byte can be 2 or 3 instead of 1 or 4. In that case the following 3-step procedure shall be applied.

1) Compare the $|DSV|$s of both streams.

2) If the $|DSV|$ of the stream in which case c) occurs is smaller than that of the other stream, then the stream in which case c) has occurred is chosen and duplicated to the other stream. One of the representations of the next 8-bit byte is entered into this stream and the other into the other stream.

3) If the $|DSV|$ of the stream in which case c) has occurred is larger than that of the other stream, then case c) is ignored and the 8-bit byte is represented according to the prescribed State.

In both cases b) and c), if the $|DSV|$s are equal, the decision to choose Stream 1 or Stream 2 is implementation-defined.

The procedure for case a) shall be as follows. At the end of a Sync Frame, whether or not case b) and or case c) have occurred, the DSV of the whole Sync Frame is computed and the stream with the lower $|DSV|$ is selected. If this DSV is greater than +63 or smaller than -64, then the SYNC Code at the beginning of the Sync Frame is changed from Primary to Secondary or vice versa. If this yields a smaller $|DSV|$, the change is permanent, if the $|DSV|$ is not smaller, the original SYNC Code is retained.

During the DSV computation, the actual values of the DSV may vary between -1000 and +1000, thus it is recommended that the count range for the DSV be at least from -1 024 to +1 023.

13.7.3 PID and PED recording

PID and PED (see 15.4 and 15.5) shall be recorded in the same manner as specified for Data Fields in 13.5, or in a simplified manner using only the Main Conversion Table G.1.

In the first case, the value of the accumulated DSV shall be reset to 0 at the beginning of VFO 1 in the Header 1 field.

In both cases recording of PID 1, PID 2, PID 3 and PID 4 shall start with the State 1.

14 Track format

14.1 Track shape

Each track shall form a 360º turn of a continuous spiral.

In the Embossed Area (see 16.1) of the Information Zone, tracks shall be formed by a series of embossed pits.

In the Rewritable Area (see 16.1) of the Information Zone, tracks shall be formed by a land and groove pattern. Recording is made on the land between the grooves as well as in the grooves themselves.
A track in the grooves is called a groove track. A track on the land between the grooves is called a land track. The end of a groove track is followed by the beginning of a land track, and vice versa.

A sector in a groove track is called a groove sector, a sector in a land track is called a land sector.

All tracks are continuous in the Information Zone. However, the grooves shall be interrupted in the Header and Mirror fields of each sector (see 15.1.1). The grooves shall be wobbled in the radial direction in such way that they are given a sinusoidal wave form.

The detailed shape of the tracks is determined by the requirements of Section 4.

Copyright International Organization for Standardization
Provided by IHS under license with ISO
No reproduction or networking permitted without license from IHS Not for Resale

14.2 Track path

The track path shall be a continuous spiral from the inside (beginning of the Lead-in Zone) to the outside (end of the Lead-out Zone) of the disk.

14.3 Track pitch

The track pitch is the distance between the centrelines of adjacent tracks, measured in a radial direction. It shall be 0,74 µm ± 0,03 µm. The track pitch averaged over the Data Zone shall be 0,74 µm ± 0,01 µm. The tracks shall start in the Lead-in Zone at radius

$$22{,}6 \text{ mm} \begin{matrix} +0{,}0 \text{ mm} \\ -0{,}2 \text{ mm} \end{matrix}$$

14.4 Track layout

Each track shall be divided into sectors.

The number of sectors per track in the Embossed Area of the Lead-in Zone shall be 18 (see table 3). Each sector in the Embossed Area of the Lead-in Zone shall comprise 2 418 bytes where each byte is represented on the disk by 16 Channel bits. The sectors in the Embossed Area of the Lead-in Zone shall be equally spaced over a track. They shall have a size of 38 688 Channel bits.

The number of sectors per track in the Rewritable Area shall increase from Zone 0 to Zone 23 when moving from the inner radius to the outer radius so as to keep the recording linear density practically constant in any Zone. Each sector shall comprise 2 697 bytes where each byte is represented on the disk by 16 Channel bits. The sectors in the Rewritable Area shall be equally spaced over a track. They shall have a size of 43 152 Channel bits.

14.5 Rotation speed

The nominal rotation speed is different in each Zone and is determined by the Zone number. These values are for reference only. The nominal rotation speed yielding a user data bit rate of 11,08 Mbit/s is obtained by using the formula

Rotation speed (Hz) = 11 080 000 / (Number of sectors per track × 2 048 × 8).

The disk shall rotate counterclockwise as viewed from the optical head.

Copyright International Organization for Standardization
Provided by IHS under license with ISO
No reproduction or networking permitted without license from IHS Not for Resale

Table 3 - Nominal rotation speed

		Rotation speed (Hz)	Number of sectors per track	Period of a Channel bit (ns)	Period of a Byte (ns)	Period of a Sector (µs)
Lead-in Zone (Embossed Area)		37,57	18	38,22	612	1 479
Lead-in Zone (Rewritable Area)		39,78	17	34,27	548	1 479
Data Zone (Rewritable Aera)	Zone 0	39,78	17	34,27	548	1 479
	Zone 1	37,57	18	34,27	548	1 479
	Zone 2	35,59	19	34,27	548	1 479
	Zone 3	33,81	20	34,27	548	1 479
	Zone 4	32,20	21	34,27	548	1 479
	Zone 5	30,74	22	34,27	548	1 479
	Zone 6	29,40	23	34,27	548	1 479
	Zone 7	28,18	24	34,27	548	1 479
	Zone 8	27,05	25	34,27	548	1 479
	Zone 9	26,01	26	34,27	548	1 479
	Zone 10	25,05	27	34,27	548	1 479
	Zone 11	24,15	28	34,27	548	1 479
	Zone 12	23,32	29	34,27	548	1 479
	Zone 13	22,54	30	34,27	548	1 479
	Zone 14	21,82	31	34,27	548	1 479
	Zone 15	21,13	32	34,27	548	1 479
	Zone 16	20,49	33	34,27	548	1 479
	Zone 17	19,89	34	34,27	548	1 479
	Zone 18	19,32	35	34,27	548	1 479
	Zone 19	18,79	36	34,27	548	1 479
	Zone 20	18,28	37	34,27	548	1 479
	Zone 21	17,80	38	34,27	548	1 479
	Zone 22	17,34	39	34,27	548	1 479
	Zone 23	16,91	40	34,27	548	1 479
Lead-out Zone (Rewritable Area)		16,91	40	34,27	548	1 479

14.6 Radial alignment

In the Lead-in Zone, the Data Zone and the Lead-out Zone, the sectors on adjacent tracks shall be radially aligned so that the angular distance between the first Channel bits of two sectors does not exceed 4 Channel bits, except for the sectors on the track along the boundary between Buffer Zone 2 and the Connection Zone (see 16.2.7), along the boundary between Guard Track Zone 1 and the Connection Zone, and along the 23 boundaries between the 24 Zones of the Data Zone.

In addition, the angular distance between the first Channel bits of any pair of non-adjacent tracks shall not exceed 256 Channel bits.

14.7 Sector number

Each sector shall be identified by a sector number.

Copyright International Organization for Standardization
Provided by IHS under license with ISO
No reproduction or networking permitted without license from IHS Not for Resale

Sector (30000) shall be the first sector of the Rewritable Area in the Lead-in Zone. It shall be located at a radius of

24,0 mm $^{+0,0\ mm}_{-0,2\ mm}$

The sector numbers of the following sectors shall be increased by 1 for each sector. Sector (30000) shall be the first sector in a groove track.

15 Sector format

15.1 Sector layout

15.1.1 Sector layout in the Rewritable Area

A sector shall consist of 20 fields within a Header field, a Mirror field and 8 fields within a Recording field. The 4 PID fields, the 4 PED fields and the Data field contain data. Each byte of these fields shall be recorded as a 16-Channel bit pattern according to 13.5 and annex G. All other fields are defined in terms of Channel bits. The numbers below the identifier of each field in figure 17 indicate the number of 16-Channel bit patterns in each field. The Recording field may be either unrecorded or recorded with up to 2 048 user bytes. The Header field shall be embossed.

The nominal length of a sector shall be 43 152 Channel bits. The length of the Header field shall be 2 048 Channel bits and the length of the Mirror field shall be 32 Channel bits. The nominal length of the Recording field shall be 41 072 Channel bits. It shall consist of a Gap field, a Guard 1 field, a VFO 3 field, a PS field, a Data field, a PA 3 field, a Guard 2 field and a Buffer field.

The Header field shall consist of a Header 1 field, a Header 2 field, a Header 3 field and a Header 4 field.
The Header 1 field shall consist of a VFO 1, an Address Mark, a Physical ID 1, a PED 1 and a PA 1.
The Header 2 field shall consist of a VFO 2, an Address Mark, a Physical ID 2, a PED 2 and a PA 2.
The Header 3 field shall consist of a VFO 1, an Address Mark, a Physical ID 3, a PED 3 and a PA 1.
The Header 4 field shall consist of a VFO 2, an Address Mark, a Physical ID 4, a PED 4 and a PA 2.

The Header field shall consist of Complementary Allocated Pit Addresses. The Header 1 field and the Header 2 field shall be arranged on the boundary between the groove track and the outer adjacent land track. The Header 3 field and the Header 4 field shall be arranged on the boundary between the groove track and the inner adjacent land track.

A groove shall be 41 072 Channel bits in length from the beginning of the Gap field. The groove is wobbled, and one wobble cycle shall be 186 Channel bits in length. This wobbled groove shall be sinusoidal, and shall start with 0 degree of phase at the beginning of the Gap field in each sector. The first half cycle shall be wobbled in the outer radial direction. The groove shall end from 0 to 4 Channel bits before the following Header field.

The Mirror field shall be located between the Header 4 and the Gap field.

The layout of a sector in the Rewritable Area is shown in figure 17.

The layout of the Header field on a disk from the view of objective lens shall be as shown in figure 18.

15.1.2 Sector layout in the Embossed Area

A sector shall consist of the Data field formed by continuous embossed pits with a size of 38 688 Channel bits.

A sector on the track has no gap and is placed continuously from the beginning of the Embossed Area in the Lead-in Zone to the end of the Embossed Area in the Lead-in Zone.

Copyright International Organization for Standardization
Provided by IHS under license with ISO
No reproduction or networking permitted without license from IHS Not for Resale

		Recording field							
Header	Mirror	Gap	Guard 1	VFO 3	PS	Data	PA 3	Guard 2	Buffer
128	2	$10 + \frac{J}{16}$	20 + K	35	3	2 418	1	55 - K	$25 - \frac{J}{16}$
		$0 \le J \le 15$						$0 \le K \le 7$	

Sector layout

Header 1					Header 2					Header 3					Header 4				
VFO 1	AM	PID 1	PED 1	PA 1	VFO 2	AM	PID 2	PED 2	PA 2	VFO 1	AM	PID 3	PED 3	PA 1	VFO 2	AM	PID 4	PED 4	PA 2
36	3	4	2	1	8	3	4	2	1	36	3	4	2	1	8	3	4	2	1

Header field layout

Figure 17 - Layout of sector in the Rewritable Area

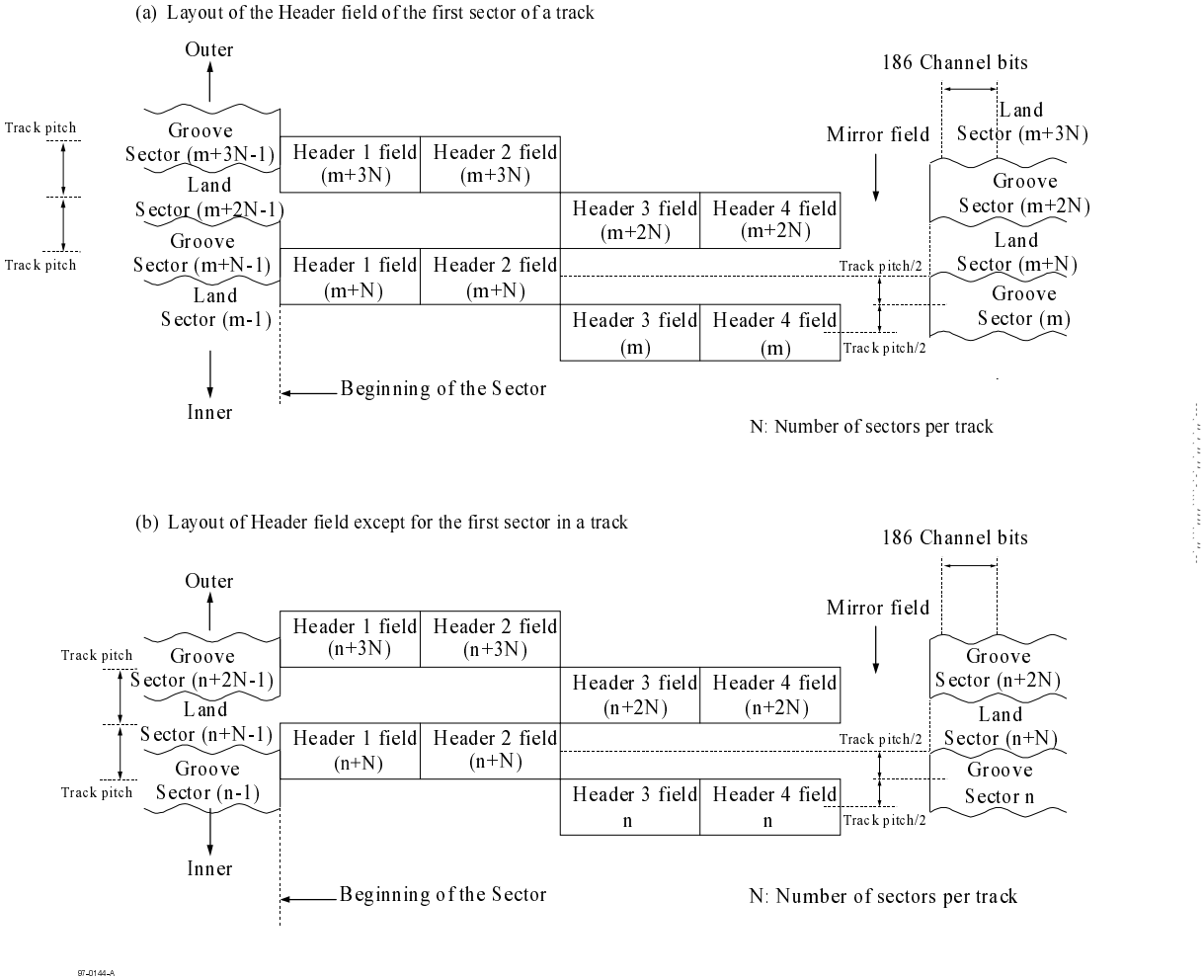

Figure 18 - Layout of Header field in the Rewritable Area

15.2 VFO fields

There shall be two embossed VFO 1 fields and two embossed VFO 2 fields in the Header field and one VFO 3 field in the Recording field to give bit synchronization to the variable frequency oscillator of the phase-locked loop of the Read Channel.

Copyright International Organization for Standardization
Provided by IHS under license with ISO
No reproduction or networking permitted without license from IHS
Not for Resale

VFO 1 shall have a length of 576 Channel bits. VFO 2 shall have a length of 128 Channel bits. VFO 3 shall have a length of 560 Channel bits.

The continuous Channel bit pattern for the VFO fields shall be as shown in figure 19.

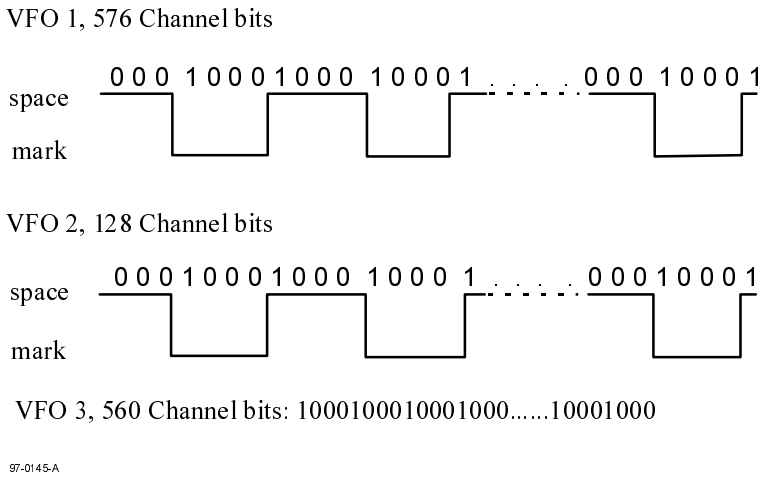

Figure 19 - VFO patterns

15.3 Address Mark (AM)

The Address Mark shall consist of an embossed pattern that does not occur in the 8-to16 recording code. The field is intended to give the drive byte synchronization for the following PID field. It shall have a length of 48 Channel bits with the following pattern as shown in figure 20.

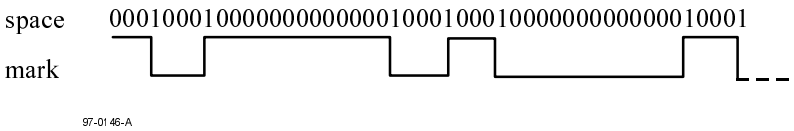

Figure 20 - Address Mark pattern

15.4 Physical ID (PID) fields

This field shall consist of four bytes the bits of which are numbered consecutively from b_0 (lsb) to b_{31} (msb), see figure 21.

b_{31} b_{30}	b_{29} b_{28}	b_{27} b_{26} b_{25}	b_{24}	b_{23} b_0
Reserved	Physical ID Number	Sector Type	Layer Number	Sector Number

Figure 21 - Physical ID field

The bits of the most significant byte, the Sector Information, shall be set as follows.

Bits b_{31} to b_{30} shall be set to ZERO ZERO

Bits b_{29} to b_{28} shall be set to

ZERO ZERO, indicating PID 1
ZERO ONE, indicating PID 2

ONE ZERO, indicating PID 3
ONE ONE, indicating PID 4

--`,,```,,,,````-`-`,,`,,`,`,,`---
Copyright International Organization for Standardization
Provided by IHS under license with ISO
No reproduction or networking permitted without license from IHS
Not for Resale

Bit b_{27} to b_{25} shall be set to

100	in the first rewritable sector in a track
101	in the last rewritable sector in a track
110	in the last but one rewritable sector in a track
111	in other rewritable sectors in a track

Bit b_{24} shall be set to ZERO, indicating Layer 0

The least significant three bytes, bits b_0 to b_{23}, shall specify the sector number in binary notation.

In the Rewritable Area, the PID 1 and the PID 2 fields both specify the sector number of the following land sector, the PID 3 and the PID 4 fields both specify the sector number of the following groove sector.

15.5 PID Error Detection code (PED) fields

Each PID field and the following PED field constitute a matrix the bytes of which are identified by C_j = 0 to 5. The bytes of the IEC are C_4 and C_5.

$$PED(x) = \sum_{j=4}^{5} C_j \; x^{5-j} = I(x)\, x^2 \mod G_E(x)$$

where,

$$I(x) = \sum_{j=0}^{3} C_j \, x^{3-j}$$

$$G_E(x) = \prod_{k=0}^{1} (x + \alpha^k)$$

α is the primitive root of the primitive polynomial $P(x) = x^8 + x^4 + x^3 + x^2 + 1$

15.6 Postamble 1 and Postamble 2 (PA 1, PA 2) fields

The Postamble 1 and Postamble 2 fields shall have a length of 16 Channel bits. The PA 1 field and PA 2 field allow for the closure of the last byte of the preceding PED, figures 22 to 25.

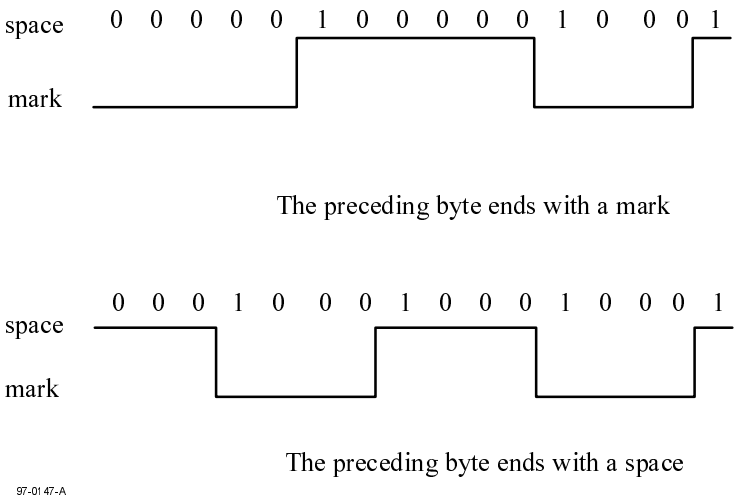

Figure 22 - PA 1 patterns in State 1 and State 2

Copyright International Organization for Standardization
Provided by IHS under license with ISO
No reproduction or networking permitted without license from IHS
Not for Resale

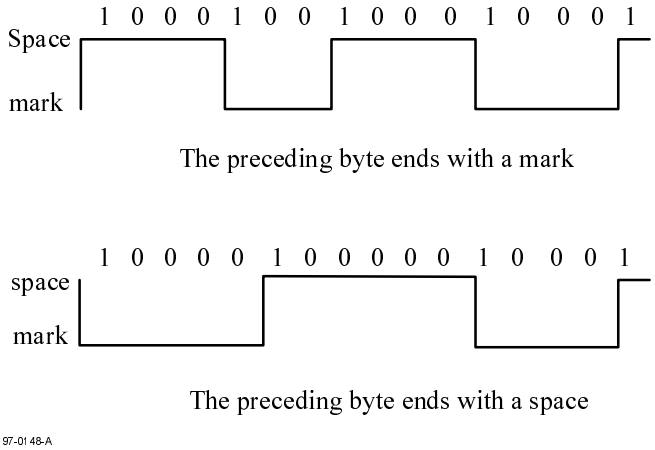

Figure 23 - PA 1 patterns in State 3 and State 4

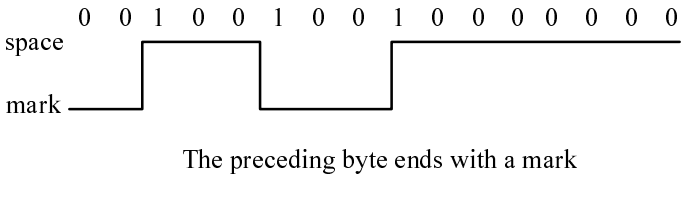

Figure 24 - PA 2 patterns in State 1 and State 2

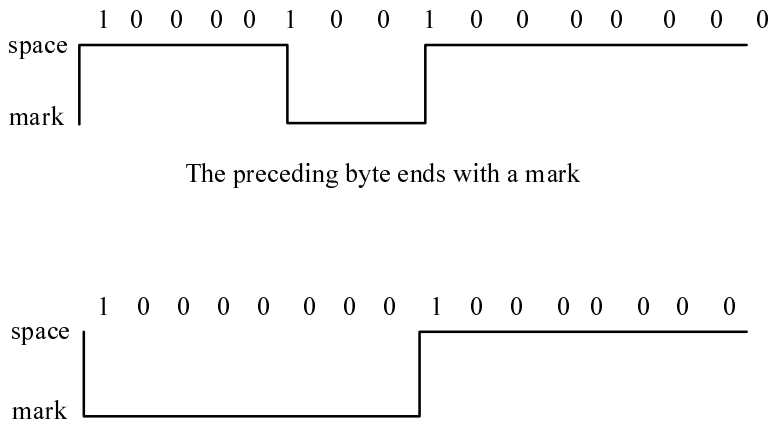

Figure 25 - PA 2 patterns in State 3 and State 4

--`,,```,,,,````-`-`,,`,,`,`,,`---
Copyright International Organization for Standardization
Provided by IHS under license with ISO
No reproduction or networking permitted without license from IHS
Not for Resale

15.7 Mirror field

This field shall have a nominal length of 32 Channel bits. This field shall have neither grooves nor embossed marks. There shall be no writing in this field.

15.8 Gap field

The Gap field shall have a nominal length of (160 + J) Channel bits, where J shall be varied randomly from 0 to 15. The tolerance on the resulting nominal length shall be ± 20 Channel bits. The variation of the length of the Gap field shall be compensated by the length of the Buffer field. See annex J.

Its contents are not specified and shall be ignored on interchange, but shall not be embossed. It is the first field of the Recording field, and gives a drive time for processing after it has finished reading the Header field and before it has to write the Guard 1 field or read the VFO 3 field.

15.9 Guard 1 field

The Guard 1 field shall have a nominal length of (20 + K) bytes, where K shall be varied randomly from 0 to 7 bytes to shift the position of the marks formed in the fields following from the VFO 3 field to the Guard 2 field of the Recording field. See annex J.

The first 20 bytes of the Guard 1 field protect the beginning of the VFO 3 field from signal degradation after overwriting many times. Their contents shall be ignored on reading.

The Guard 1 field shall contain (20 + K) times the 16 Channel bit pattern

1000 1000 1000 1000

15.10 Pre-Synchronous code (PS) field

The PS field is intended to allow the drive to achieve byte synchronization for the following Data field.

It shall contain the 48-Channel bit pattern

0000 0100 0100 1000 0010 0001 0010 0000 1000 0010 0001 0000

15.11 Data field

This field shall be recorded with the format specified in clause 13.

15.12 Postamble 3 (PA 3) field

The PA 3 field shall be equal in length to 16 Channel bits. The PA 3 field allows closure of the last byte of the preceding Data field as required by the 8-to-16 recording code.

For State 1 and State 2, it shall be set to
0001 0010 0100 0100 / 0001 0010 0000 0100

State 3 and State 4, it shall be set to
1001 0010 0000 0100 / 1001 0010 0100 0100

In demodulating, PA 3 can be used as the first 16 Channel bits of SY0 in the next Data field.

15.13 Guard 2 field

The Guard 2 field shall have a nominal length of (55-K) bytes, where K shall be varied from 0 to 7 so that the total length of Guard 1 field and Guard 2 field shall be equal to 75 bytes. The last 20 bytes of the Guard 2 field protect the end of the Data field from degradation after overwriting many times. The rest of the Guard 2 field takes up the variation of actual length of the written data. Its contents shall be ignored in interchange.

The Guard 2 field shall be set to (55-K) times the 16-Channel bit pattern

1000 1000 1000 1000

The fields of the Guard 1 field, the VFO_3 field, the PS field, the Data field, the PA 3 field and the Guard 2 field shall be written without a gap and their total length shall be 2 532 bytes. See annex J.

15.14 Recording polarity randomization

In the Rewritable Area, the polarity of NRZI-converted pulses shall be alternated randomly at each recording in order to homogenize the average probability of location of the marks and spaces on the recording layer after a number of overwriting

Copyright International Organization for Standardization
Provided by IHS under license with ISO
No reproduction or networking permitted without license from IHS Not for Resale

cycles. The alternation shall be applied to all pulses in the Guard 1 field, the VFO_3 field, the PS field, the Data field, the PA 3 field and the Guard 2 field, at the same time.

The random selection shall be carried out in such a way that the polarity, length of the Gap field and length of the Guard 2 field shall have no relation with each other. See annex J.

The polarity shall be ignored on interchange.

15.15 Buffer field

The Buffer field shall have a nominal length of (400 - J) Channel bits, where the J shall equal the number J selected in 15.8. The tolerance on the resulting nominal value shall be ± 272 Channel bits. The content of this field is not specified by this International Standard, and shall be ignored in interchange.

The Buffer field is needed for the actual length of the written data, as determined by the runout of the track and the speed variations of the disk during writing of the data.

16 Format of the Information Zone

16.1 Division of the Information Zone

The Information Zone shall comprise three parts: the Lead-in Zone, the Data Zone and the Lead-out Zone. It shall contain all information on the disk relevant for data interchange. This information shall consist of tracking provisions, Header fields, data and user-recorded data. In the first five zones of the Lead-in Zone (see 16.2) this information is embossed. These five zones constitute the Embossed Area. The last six zones of the Lead-in Zone, the Data Zone and the Lead-out Zone constitute the Rewritable Area in which the information is recorded in rewritable mode.

The Information Zone shall be sub-divided as follows.

- **Lead-in Zone**
  - Initial Zone
  - Buffer Zones
  - Reference Code Zone
  - Control Data Zone
  - Connection Zone
  - Guard Track Zones
  - Test Zones
  - Reserved Zone
  - Defect Management Areas (DMA 1 and DMA 2)
- **Data Zone**
- **Lead-out Zone**
  - Defect Management Areas (DMA 3 and DMA 4)
  - Reserved Zone
  - Guard Track Zones
  - Test Zones

The division of the Information Zone shall be as shown in table 4. The radii of a Zone in the table are the nominal values of the radius of the centre of the first track and of the radius of the centre of the last track of the Zone. The tolerance on these nominal values shall be +0,0 mm and -0,2 mm.

Copyright International Organization for Standardization
Provided by IHS under license with ISO
No reproduction or networking permitted without license from IHS Not for Resale

Table 4 - Layout of the Information Zone

			Nominal radius (mm)	Number of sectors per track	Number of tracks	Sector numbers
Lead- in Zone	**(Embossed Area)**	Initial Zone Reference Code Zone Buffer Zone 1 Control Data Zone Buffer Zone 2	22,6 to 24,0	18	1 896	(027AB0) to (02EFFF) (02F000) to (02F00F) (02F010) to (02F1FF) (02F200) to (02FDFF) (02FE00) to (02FFFF)
		Connection Zone				
	(Rewritable Area)	Guard Track Zone 1 Disk Test Zone Drive Test Zone Guard Track Zone 2 Reserved Zone DMA 1 & DMA 2	24,0 to 24,2	17	1 888	(030000) to (0301FF) (030200) to (0305FF) (030600) to (030CFF) (030D00) to (030EFF) (030F00) to (030F7F) (030F80) to (030FFF)
Data Zone (Rewritable Area)		Zone 0	24,2 to 25,4	17		(031000) to (037D5F)
		Zone 1	25,4 to 26,8	18	1 888	(037D60) to (04021F)
		Zone 2	26,8 to 28,2	19	1 888	(040220) to (048E3F)
		Zone 3	28,2 to 29,6	20	1 888	(048E40) to (0521BF)
		Zone 4	29,6 to 31,0	21	1 888	(0521C0) to (05BC9F)
		Zone 5	31,0 to 32,4	22	1 888	(05BCA0) to (065EDF)
		Zone 6	32,4 to 33,8	23	1 888	(065EE0) to (07087F)
		Zone 7	33,8 to 35,2	24	1 888	(070880) to (07B97F)
		Zone 8	35,2 to 36,6	25	1 888	(07B980) to (0871DF)
		Zone 9	36,6 to 38,0	26	1 888	(0871E0) to (09319F)
		Zone 10	38,0 to 39,4	27	1 888	(0931A0) to (09F8BF)
		Zone 11	39,4 to 40,8	28	1 888	(09F8C0) to (0AC73F)
		Zone 12	40,8 to 42,2	29	1 888	(0AC740) to (0B9D1F)
		Zone 13	42,2 to 43,6	30	1 888	(0B9D20) to (0C7A5F)
		Zone 14	43,6 to 45,0	31	1 888	(0C7A60) to (0D5EFF)
		Zone 15	45,0 to 46,4	32	1 888	(0D5F00) to (0E4AFF)
		Zone 16	46,4 to 47,8	33	1 888	(0E4B00) to (0F3E5F)
		Zone 17	47,8 to 49,1	34	1 888	(0F3E60) to (10391F)
		Zone 18	49,1 to 50,5	35	1 888	(103920) to (113B3F)
		Zone 19	50,5 to 51,9	36	1 888	(113B40) to (1244BF)
		Zone 20	51,9 to 53,3	37	1 888	(1244C0) to (13559F)
		Zone 21	53,3 to 54,7	38	1 888	(1355A0) to (146DDF)
		Zone 22	54,7 to 56,1	39	1 888	(146DE0) to (158D7F)
		Zone 23	56,1 to 57,5	40	1 888	(158D80) to (16B47F)
Lead-out Zone (Rewritable Area)		DMAs 3 & 4 Reserved Zone Guard Track Zone 1 Drive Test Zone Disk Test Zone Guard Track Zone 2	57,5 to 58,6	40	1 446	(16B480) to (16B4FF) (16B500) to (16B57F) (16B580) to (16B77F) (16B780) to (16BE7F) (16BE80) to (16C57F) (16C580) to (17966F)

--`,,```,,,,````-`-`,,`,,`,`,,`---

Copyright International Organization for Standardization
Provided by IHS under license with ISO
No reproduction or networking permitted without license from IHS
Not for Resale

16.2 Lead-in Zone

16.2.1 Structure of Lead-in Zone

The structure of the Lead-in Zone is shown in figure 26. The sector numbers indicate the first sector of each zone, as well as the last one of the Initial Zone and of Buffer Zone 2. The first five zones are in the Embossed Area, the Connection Zone constitutes the Mirror Zone, the last seven zones and the Data Zone are in the Rewritable Area.

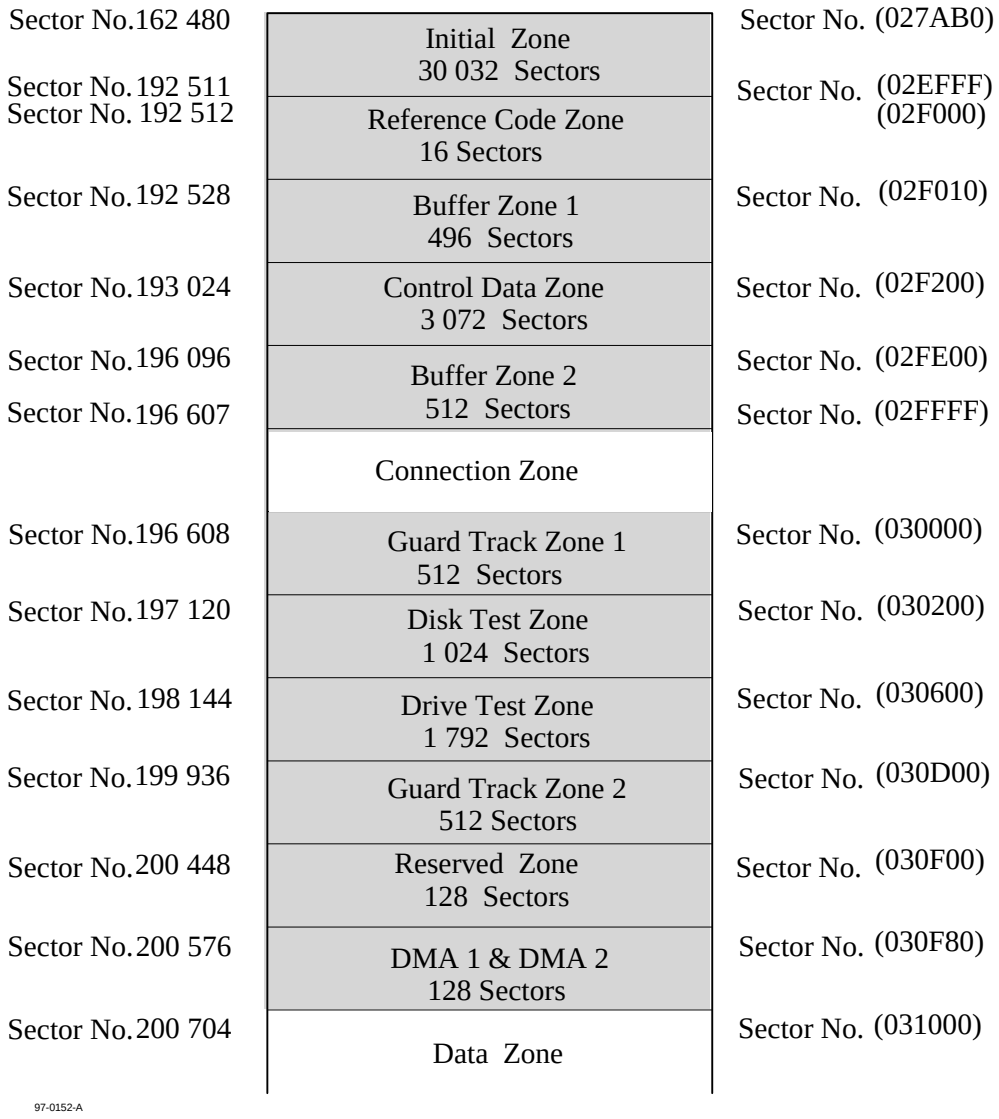

Figure 26 - Structure of Lead-in Zone

16.2.2 Initial Zone

This zone shall comprise 30 032 sectors. The Main Data of the Data Frames recorded in the Initial Zone shall be set to (00).

16.2.3 Reference Code Zone

The Reference Code Zone shall consist of the 16 Recorded Data Fields from an ECC Block which generate a specific Channel bit pattern on the disk. This shall be achieved by setting to (AC) all 2 048 Main Data bytes of the Data Frame. Moreover, no scrambling shall be applied to this Data Frame, except to the first 160 Main Data bytes of the Data Frame of the ECC Block.

16.2.4 Buffer Zone 1

This zone shall consist of 496 Recorded Data Fields from 31 ECC Blocks. The Main Data of the Data Frames eventually recorded as Recorded Data Fields in this zone shall be set to (00).

--`,,```,,,,````-`-`,,`,,`,`,,`---
Copyright International Organization for Standardization
Provided by IHS under license with ISO
No reproduction or networking permitted without license from IHS
Not for Resale

16.2.5 Buffer Zone 2

This zone shall consist of 512 Recorded Data Fields from 32 ECC Blocks. The Main Data of the Data Frames recorded as Recorded Data Fields in this zone shall be set to (00).

16.2.6 Control Data Zone

The Data fields in the Control Data Zone shall contain embossed control data for the drive.

The Control Data Zone comprises the 192 ECC blocks starting from the sector number 193 024 ((2F200)). The content of 16 sectors in each block shown in figure 27 is repeated 192 times.

In each ECC Block, the first sector shall contain Physical format information and the second sector in each block shall contain Disk manufacturing information.

The contents of the other sectors in each block are reserved. All the bytes in the reserved block shall be set to (00).

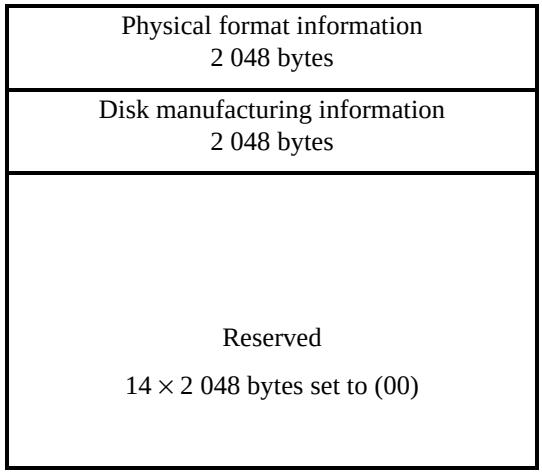

Figure 27 - Structure of an ECC Block in the Control Data Zone

--`,,```,,,,````-`-`,,`,,`,`,,`---

Copyright International Organization for Standardization
Provided by IHS under license with ISO
No reproduction or networking permitted without license from IHS Not for Resale

16.2.6.1 Physical format information

This information shall comprise the 2 048 bytes specified by table 5.

Table 5 - Physical format information

Byte position	Contents	Number of bytes
0	Disk Category and Version Number	1
1	Disk size and maximum transfer rate	1
2	Disk structure	1
3	Recording density	1
4 to 15	Data Zone allocation	12
16 to 31	Reserved	16
32	Disk Type identification	1
33 to 47	Reserved	15
48	Velocity 1	1
49	Read power at Velocity 1	1
50	Peak power on the land track at Velocity 1	1
51	Bias Power 1 on the land track at Velocity 1	1
52	First pulse starting time on the land track at Velocity 1	1
53	First pulse ending time on the land track at Velocity 1	1
54	Multiple-pulse duration on the land track at Velocity 1	1
55	Last pulse starting time on the land track at Velocity 1	1
56	Last pulse ending time on the land track at Velocity 1	1
57	Bias Power 2 duration on the land track at Velocity 1	1
58	Peak power on the groove track at Velocity 1	1
59	Bias Power 1 on the groove track at Velocity 1	1
60	First pulse starting time on the groove track at Velocity 1	1
61	First pulse ending time on the groove track at Velocity 1	1
62	Multiple-pulse duration on the groove track at Velocity 1	1
63	Last pulse starting time on the groove track at Velocity 1	1
64	Last pulse ending time on the groove track at Velocity 1	1
65	Bias Power 2 duration on the groove track at Velocity 1	1
66 to 479	Reserved for write conditions at Velocity 2 to Velocity 24	414
480 to 2 047	Reserved	1 568

Byte 0 - Disk Category and Version Number

Bits b_7 to b_4 shall specify the Disk Category
They shall be set to 0001, indicating a rewritable disk

Bits b_3 to b_0 shall specify the Version Number
They shall be set to 0001, indicating this International Standard

Other settings are prohibited by this International Standard.

Byte 1 - Disk size and maximum transfer rate

Bits b_7 to b_4 shall specify the disk size.
They shall be set to 0000, indicating a 120 mm disk.

Copyright International Organization for Standardization
Provided by IHS under license with ISO
No reproduction or networking permitted without license from IHS Not for Resale

Bits b_3 to b_0	shall specify the maximum transfer rate. They shall be set to 0010, indicating a maximum transfer rate of 10,08 Mbits/s.

Other settings are prohibited by this International Standard.

Byte 2 - Disk structure

Bits b_7	shall be set to ZERO
Bits b_6 and b_5	shall specify the number of recording layers accessible through an Entrance surface They shall be set to 00, indicating a single layer
Bit b_4	shall be set to ZERO
Bits b_3 to b_0	shall specify the type of the recording layer They shall be set to 0100, indicating a rewritable recording layer

Other settings are prohibited by this International Standard.

Byte 3 - Recording density

Bits b_7 to b_4	shall specify the average Channel bit length They shall be set to 0010, indicating 0,205 µm to 0,218 µm
Bits b_3 to b_0	shall specify the average track pitch They shall be set to 0000, indicating an average track pitch of 0,74 µm

Other settings are prohibited by this International Standard.

Byte 4 to 15 - Data Zone allocation

Byte 4	shall be set to (00). Byte 5 to 7 shall be set to (031000) to specify the Sector Number 200 704 of the first Recorded Data Field of the Data Zone.
Byte 8	shall be set to (00).
Byte 9 to 11	shall be set to (16B47F) to specify the Sector Number 1 487 999 of the last Recorded Data Field of the Data Zone.
Byte 12	shall be set to (00).
Bytes 13 to 15	shall be set to (00).

Other settings are prohibited by this International Standard.

Bytes 16 to 31 - Reserved

These bytes shall be set to (00).

Byte 32 - Disk type identification

This byte shall specify the Disk type.

This byte shall be set to	(00), if a disk shall not be recorded without a case (10), if a disk may be recorded with or without a case

Bytes 33 to 47 - Reserved

These bytes shall be set to (00).

Byte 48 - Velocity 1

This byte shall be set to 00111100, indicating a linear velocity of 6,0 m/s

Other settings are prohibited by this International Standard.

Byte 49 - Read power at Velocity 1

This byte shall specify the Read power on the surface of the disk for reading at Velocity 1.
This byte shall be set to 00001010, indicating a Read power of 1,0 mW.

Other settings are prohibited by this International Standard.

--`,,```,,,,````-`-`,,`,,`,`,,`---

Copyright International Organization for Standardization
Provided by IHS under license with ISO
No reproduction or networking permitted without license from IHS Not for Resale

Byte 50 - Peak power on land tracks at Velocity 1

This byte shall specify the Peak power on the surface of the disk for recording on land tracks at Velocity 1.
This byte shall be set to 01101110, indicating a Peak power of 11,0 mW.

Other settings are prohibited by this International Standard.

Byte 51 - Bias Power 1 on land tracks at Velocity 1

This byte shall specify the Bias Power 1 on the surface of the disk for recording on land tracks at Velocity 1.
This byte shall be set to 00110010, indicating a Bias Power 1 of 5,0 mW.

Other settings are prohibited by this International Standard (see also annex L).

Byte 52 - First pulse starting time on land tracks at Velocity 1

This byte shall specify the first pulse starting time (T_{SFP}) for recording on land tracks at Velocity 1, see annex H.

Bit b_7	shall be set to ZERO, indicating the same direction as the laser spot scanning.
Bits b_6 to b_0	shall be set to 0010001, indicating a T_{SFP} of 17 ns.

Other settings are prohibited by this International Standard.

Byte 53 - First pulse ending time on land tracks at Velocity 1

This byte shall specify the first pulse ending time (T_{EFP}) for recording on land tracks at Velocity 1, see annex H.
This byte shall be set to 00110011, indicating a T_{EFP} of 51 ns.

Other settings are prohibited by this International Standard.

Byte 54 -Multiple-pulse duration on land tracks at Velocity 1

This byte shall specify the multiple-pulse duration time (T_{MP}) for recording on land tracks at Velocity 1, see annex H.
This byte shall be set to 00010001, indicating a T_{MP} of 17 ns.

Other settings are prohibited by this International Standard.

Byte 55 - Last pulse starting time on land tracks at Velocity 1

This byte shall specify the last pulse starting time (T_{SLP}) for recording on land tracks at Velocity 1, see annex H.
Bit b_7 shall be set to ZERO, indicating the same direction to the laser spot scanning.
Bits b_6 to b_0 shall be set to 0000000, indicating a T_{SLP} of 0 ns.

Other settings are prohibited by this International Standard.

Byte 56 - Last pulse ending time on land tracks at Velocity 1

This byte shall specify the last pulse ending time (T_{ELP}) for recording on land tracks at Velocity 1, see annex H.
This byte shall be set to 00100010, indicating a T_{ELP} of 34 ns.

Other settings are prohibited by this International Standard.

Byte 57 -Bias Power 2 duration on land tracks at Velocity 1

This byte shall specify the Bias Power 2 duration (T_{LE}) for recording on land tracks at Velocity 1, see annex H.
This byte shall be set to 01000100, indicating a T_{LE} of 68 ns.

Other settings are prohibited by this International Standard.

Byte 58 - Peak power on groove tracks at Velocity 1

This byte shall specify the Peak power on the surface of the disk for recording on groove tracks at Velocity 1.
This byte shall be set to 01101110, indicating a Peak power of 11,0 mW.

Other settings are prohibited by this International Standard.

Byte 59 - Bias Power 1 on groove tracks at Velocity 1

This byte shall specify the Bias Power 1 on the surface of the disk for recording on groove tracks at Velocity 1.
This byte shall be set to 00110010, indicating a Bias Power 1 of 5,0 mW.

Other settings are prohibited by this International Standard.

Copyright International Organization for Standardization
Provided by IHS under license with ISO
No reproduction or networking permitted without license from IHS Not for Resale

Byte 60 - First pulse starting time on groove tracks at Velocity 1

This byte shall specify the first pulse starting time (T_{SFP}) for recording on groove tracks at Velocity 1, see annex H.
Bit b_7 shall be set to ZERO, indicating the same direction to the laser spot scanning.
Bits b_6 to b_0 shall be set to 0010001, indicating a T_{SFP} of 17 ns.

Other settings are prohibited by this International Standard.

Byte 61 - First pulse ending time on groove tracks at Velocity 1

This byte shall specify the first pulse ending time (T_{EFP}) for recording on groove tracks at Velocity 1, see annex H.
This byte shall be set to 00110011, indicating a T_{EFP} of 51 ns.

Other settings are prohibited by this International Standard.

Byte 62 -Multiple-pulse duration on groove tracks at Velocity 1

This byte shall specify the multiple-pulse duration time (T_{MP}) for recording on groove tracks at Velocity 1, see annex H.
This byte shall be set to 00010001, indicating a T_{MP} of 17 ns.

Other settings are prohibited by this International Standard.

Byte 63 - Last pulse starting time on groove tracks at Velocity 1

This byte shall specify the last pulse starting time (T_{SLP}) for recording on groove tracks at Velocity 1, see annex H.
Bit b_7 shall be set to ZERO, indicating the same direction to the laser spot scanning.
Bits b_6 to b_0 shall be set to 0000000, indicating a T_{SLP} of 0 ns.

Other settings are prohibited by this International Standard.

Byte 64 - Last pulse ending time on groove tracks at Velocity 1

This byte shall specify the last pulse ending time (T_{ELP}) for recording on groove tracks at Velocity 1, see annex H.
This byte shall be set to 00100010, indicating a T_{ELP} of 34 ns.

Other settings are prohibited by this International Standard.

Byte 65 -Bias Power 2 duration on groove tracks at Velocity 1

This byte shall specify the Bias Power 2 duration (T_{LE}) for recording on groove tracks at Velocity 1, see annex H.
This byte shall be set to 01000100, indicating a T_{LE} of 68 ns.

Other settings are prohibited by this International Standard.

Byte 66 to 479 - Reserved

These bytes shall be set to (00).

Byte 480 to 2047 - Reserved

These bytes shall be set to (00).

16.2.6.2 Disk manufacturing information

This International Standard does not specify the format and the content of these 2 048 bytes. They shall be ignored for interchange.

16.2.7 Connection Zone

The Connection Zone is intended to connect the Embossed Area and the Rewritable Area. This zone shall have neither grooves nor embossed marks.

The distance between the track centreline of the last sector of the Buffer Zone 2, sector No. (02FFFF), and that of the first sector of Guard Track Zone 1, sector No. (030000), shall be in the range 1,42 µm to 6,16 µm, see figure 28.

Copyright International Organization for Standardization
Provided by IHS under license with ISO
No reproduction or networking permitted without license from IHS Not for Resale

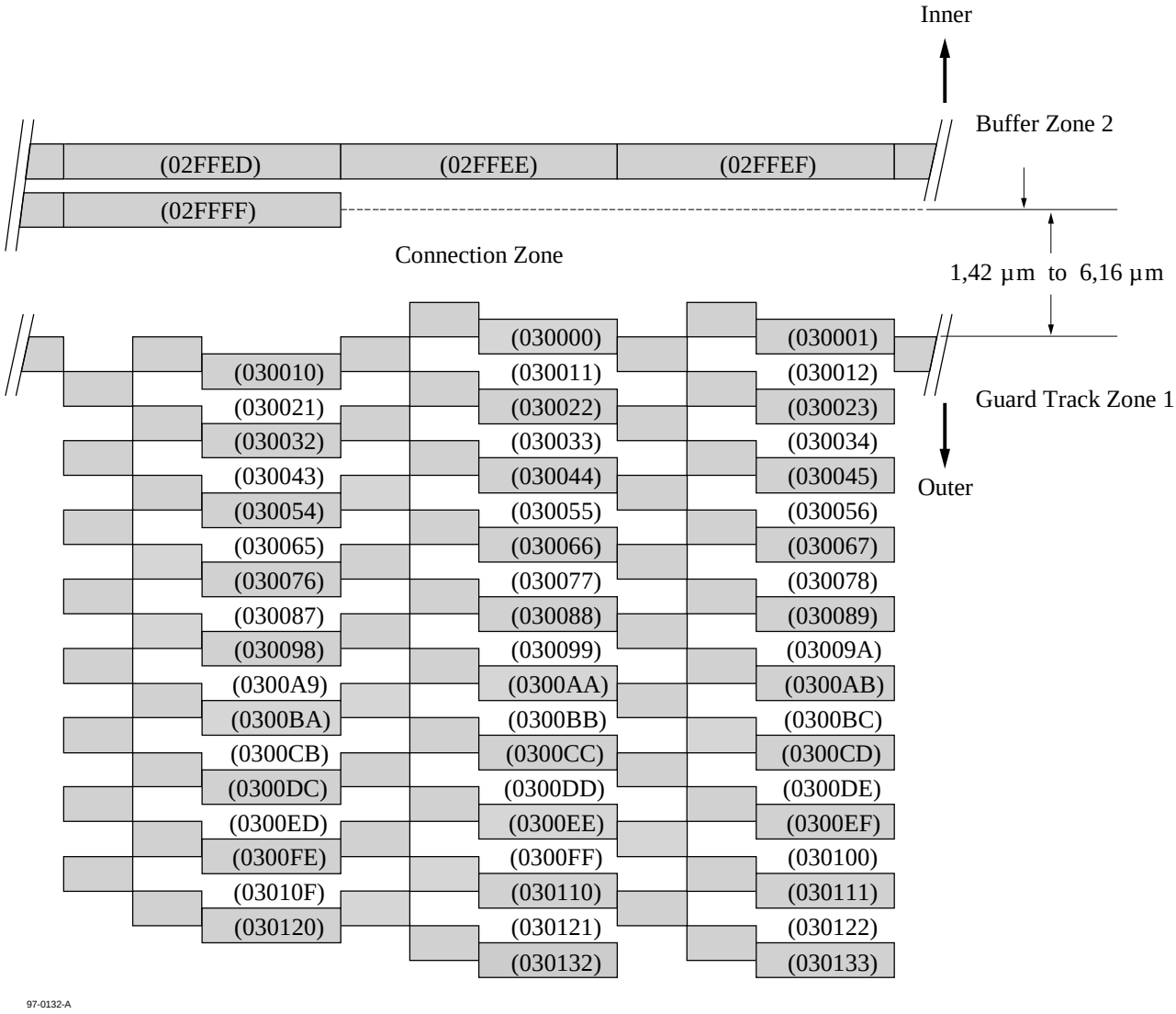

Figure 28 - Structure around the Connection Zone

16.2.8 Guard Track Zones 1 and 2

Both zones shall consist of 512 sectors each. They shall contain grooves, lands, Header fields, Mirror fields and the Recording fields. The recording fields of the Guard Track Zones shall be unrecorded.

16.2.9 Disk Test Zone

This zone shall consist of 1 024 sectors. It shall contain grooves, lands, Header fields, Mirror fields and Recording fields.

This zone is intended for use by disk manufacturers, and shall be ignored in interchange.

16.2.10 Drive Test Zone

This zone shall consist of 1 792 sectors. It shall contain grooves, lands, Header fields, Mirror fields and Recording fields.

This zone is intended for use by a drive, and shall be ignored in interchange.

16.2.11 Reserved Zone

This zone shall consist of 128 sectors set to all ZEROs.

16.2.12 DMA 1 and DMA 2

This zone shall consist of 128 sectors. DMA 1 and DMA 2 shall be as specified in 17.1 .

Copyright International Organization for Standardization
Provided by IHS under license with ISO
No reproduction or networking permitted without license from IHS
Not for Resale

16.3 Data Zone

16.3.1 Structure of Data Zone and of the Defect Management Areas (DMAs)

The Data Zone shall contain a Rewritable Area. The Data Zone shall start from sector No. (031000). Each zone of the Data Zone comprises Guard Tracks Zones as specified in 18.2. The position of the DMAs relative to the Data Zone is shown in figure 29.

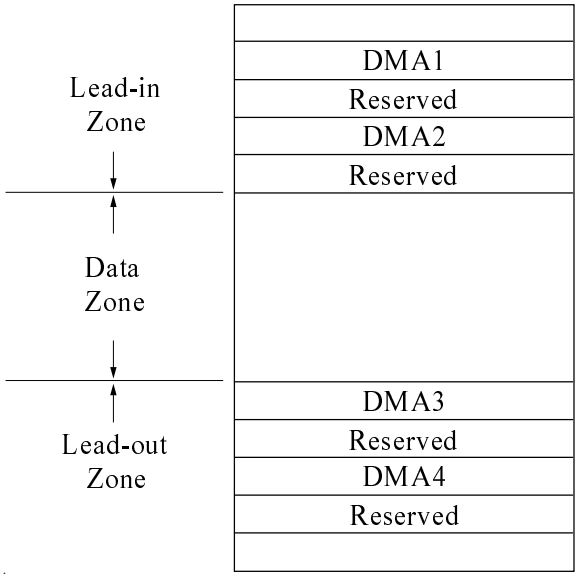

Figure 29 - Layout of the Data Zone and DMAs

16.3.2 Guard Track Zones

Each zone within the Data Zone shall start and end with a Guard Track Zone, except Zone 0 which does not start with a Guard Track Zone and Zone 23 which does not end with a Guard Track Zone. The number of sectors in the Guard Track Zones shall be the smallest multiple of 16 sufficient to occupy two tracks.

The Guard Track Zones shall contain embossed grooves, Header fields and Recording fields which shall be unrecorded.

16.3.3 Partitioning

The Data Area shall be partitioned into 24 consecutive Groups. Each Group shall span one complete Zone excluding the Guard Track Zones.

Each Group shall comprise a User Area and a Spare Area. The allocation of these area are shown in table 6.

Sectors in the User Area shall have a sequential Logical Sector Number (LSN), except as specified in clause 17. All sectors in the User Area specified in table 6 shall be numbered sequentially by the LSN in such a way that the first sector in the User Area in Zone 0 be set to 0 and incremented by 1 for every sector, and the first sector of the User Area in Zone 1 is continued from the last sector in the User Area in Zone 0.

The Data Zone shall consist of Data blocks as a unit for writing and reading of ECC blocks. Each Data block shall consist of 16 sectors having consecutive LSN unless the Data block is replaced by the linear replacement algorithm. The Data block shall be so allocated that the LSN of the first sector in the Data block shall be multiple of 16.

The User Area and the Spare Area shall be partitioned into Data Blocks and Spare Blocks. Each sector of a Data Block shall have a LSN. A Data Block shall be in one of the following states:

– it is an ECC Block,
– its Data Field Number is in the range (000000) to (00000F),
– it is unwritten.

Copyright International Organization for Standardization
Provided by IHS under license with ISO
No reproduction or networking permitted without license from IHS
Not for Resale

Copyright International Organization for Standardization
Provided by IHS under license with ISO
No reproduction or networking permitted without license from IHS
Not for Resale

Table 6 - Structure of Groups

Zone	Number of Sectors per track	Sector number of the first sector of the Group	Starting Guard Track Zone Sector No. of the first and last sectors	Group					Ending Guard Track Zone Sector No. of the first and last sectors	Sector number of the last sector of the Group	LSN of the 1st sector in the Group	Data Field Number of the first sector in the Group
				Group number	User Area		Spare Area					
					Sector number	Number of blocks	Sector number	Number of sectors				
0	17	(031000)	--------	0	(031000) to (0377DF)	1 662	(0377E0) to (037D2F)	1 360	(037D30) to (037D5F)	(037D5F)	0	(031000)
1	18	(037D60)	(037D60) to (037D8F)	1	(037D90) to (03FB2F)	2 010	(03FB30) to (0401EF)	1 728	(0401F0) to (04021F)	(04021F)	26 592	(0377E0)
2	19	(040220)	(040220) to (04024F)	2	(040250) to (0486EF)	2 122	(0486F0) to (048E0F)	1 824	(048E10) to (048E3F)	(048E3F)	58 752	(03F580)
3	20	(048E40)	(048E40) to (048E6F)	3	(048E70) to (051A0F)	2 234	(051A10) to (05218F)	1 920	(052190) to (0521BF)	(0521BF)	92 704	(047A20)
4	21	(0521C0)	(0521C0) to (0521EF)	4	(0521F0) to (05B48F)	2 346	(05B490) to (05BC6F)	2 016	(05BC70) to (05BC9F)	(05BC9F)	128 448	(0505C0)
5	22	(05BCA0)	(05BCA0) to (05BCCF)	5	(05BCD0) to (06566F)	2 458	(065670) to (065EAF)	2 112	(065EB0) to (065EDF)	(065EDF)	165 984	(059860)
6	23	(065EE0)	(065EE0) to (065F0F)	6	(065F10) to (06FFAF)	2 570	(06FFB0) to (07084F)	2 208	(070850) to (07087F)	(07087F)	205 312	(063200)
7	24	(070880)	(070880) to (0708AF)	7	(0708B0) to (07B04F)	2 682	(07B050) to (07B94F)	2 304	(07B950) to (07B97F)	(07B97F)	246 432	(06d2A0)
8	25	(07B980)	(07B980) to (07B9BF)	8	(07B9C0) to (08683F)	2 792	(086840) to (08719F)	2 400	(0871A0) to (0871DF)	(0871DF)	289 344	(077A40)
9	26	(0871E0)	(0871E0) to (08721F)	9	(087220) to (09279F)	2 904	(0927A0) to (09315F)	2 496	(093160) to (09319F)	(09319F)	334 016	(0828C0)
10	27	(0931A0)	(0931A0) to (0931DF)	10	(0931E0) to (09EE5F)	3 016	(09EE60) to (09F87F)	2 592	(09F880) to (09F8BF)	(09F8BF)	380 480	(08dE40)
11	28	(09F8C0)	(09F8C0) to (09F8FF)	11	(09F900) to (0ABC7F)	3 128	(0ABC80) to (0AC6FF)	2 688	(0AC700) to (0AC73F)	(0AC73F)	428 736	(099AC0)
12	29	(0AC740)	(0AC740) to (0AC77F)	12	(0AC780) to (0B91FF)	3 240	(0B9200) to (0B9CDF)	2 784	(0B9CE0) to (0B9D1F)	(0B9D1F)	478 784	(0A5E40)
13	30	(0B9D20)	(0B9D20) to (0B9D5F)	13	(0B9D60) to (0C6EDF)	3 352	(0C6EE0) to (0C7A1F)	2 880	(0C7A20) to (0C7A5F)	(0C7A5F)	530 624	(0B28C0)
14	31	(0C7A60)	(0C7A60) to (0C7A9F)	14	(0C7AA0) to (0D531F)	3 464	(0D5320) to (0D5EBF)	2 976	(0D5EC0) to (0D5EFF)	(0D5EFF)	584256	(0BFA40)
15	32	(0D5F00)	(0D5F00) to (0D5F3F)	15	(0D5F40) to (0E3EBF)	3 576	(0E3EC0) to (0E4ABF)	3 072	(0E4AC0) to (0E4AFF)	(0E4AFF)	639 680	(0CD2C0)
16	33	(0E4B00)	(0E4B00) to (0E4B4F)	16	(0E4B50) to (0F31AF)	3 686	(0F31B0) to (0F3E0F)	3 168	(0F3E10) to (0F3E5F)	(0F3E5F)	696 896	(0DB240)
17	34	(0F3E60)	(0F3E60) to (0 F3EAF)	17	(0F3EB0) to (102C0F)	3 798	(102C10) to (1038CF)	3 264	(1038D0) to (10391F)	(10391F)	755 872	(0E98A0)
18	35	(103920)	(103920) to (10396F)	18	(103970) to (112DCF)	3 910	(112DD0) to (113AEF)	3 360	(113AF0) to (113B3F)	(113B3F)	816 640	(0F8600)
19	36	(113B40)	(113B40) to (113B8F)	19	(113B90) to (1236EF)	4 022	(1236F0) to (12446F)	3 456	(124470) to (1244BF)	(1244BF)	879 200	(107A60)
20	37	(1244C0)	(1244C0) to (12450F)	20	(124510) to (13476F)	4 134	(134770) to (13554F)	3 552	(135550) to (13559F)	(13559F)	943 552	(1175C0)
21	38	(1355A0)	(1355A0) to (1355EF)	21	(1355F0) to (145F4F)	4 246	(145F50) to (146D8F)	3 648	(146D90) to (146DDF)	(146DDF)	1 009 696	(127820)
22	39	(146DE0)	(146DE0) to (146E2F)	22	(146E30) to (157E8F)	4 358	(157E90) to (158D2F)	3 744	(158D30) to (158D7F)	(158D7F)	1 077 632	(138180)
23	40	(158D80)	(158D80) to (158DCF)	23	(158DD0) to (16A57F)	4 475	(16A580) to (16B47F)	3 840	--------	(16B47F)	1 147 360	(1491E0)
Total						76 185		65 392				

© ISO/IEC

16.4 Lead-out Zone

16.4.1 Structure of Lead-out Zone

The structure of the Lead-out Zone shall be as shown in figure 30.

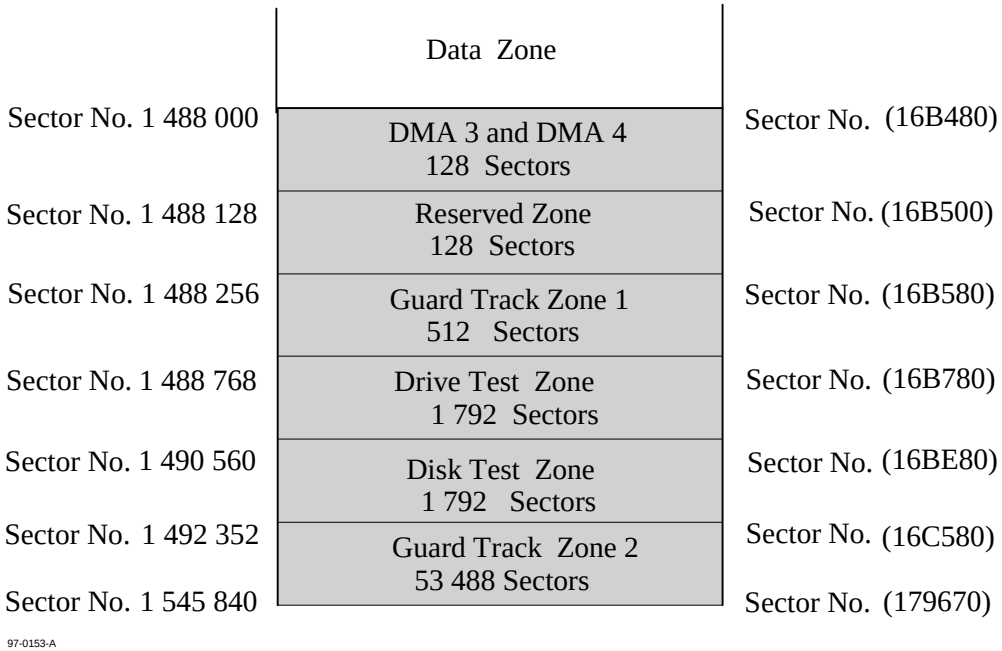

Figure 30 - Structure of Lead-out Zone

16.4.2 DMA 3 and DMA 4

This zone shall consist of 128 sectors. DMA 3 and DMA 4 shall be as specified in 17.1 .

16.4.3 Reserved Zone

This zone shall consist of 128 sectors set to all ZEROs.

16.4.4 Guard Track Zone 1

This zone shall consist of 512 sectors. It contains grooves, lands, Header fields, Mirror fields and Recording fields. The Recording fields shall be unrecorded.

16.4.5 Drive Test Zone

This zone shall consist of 1 792 sectors. It shall contain grooves, lands, Header fields, Mirror fields and Recording fields. This zone is intended for use by the drive. It shall be ignored in interchange.

16.4.6 Disk Test Zone

This zone shall consist of 1 752 sectors. It shall contain grooves, lands, Header fields, Mirror fields and Recording fields. This zone is intended for use by the disk manufacturers. It shall be ignored in interchange.

16.4.7 Guard Track Zone 2

This zone shall consist of 53 488 sectors. It contains grooves, lands, Header fields, Mirror fields and Recording fields. The Recording fields shall be unrecorded.

17 Defect management

17.1 Defect Management Areas (DMAs)

The four Defect Management Areas contain information on the structure of the Data Zone and on the defect management. The length of each DMA shall be 32 sectors. Two of the DMAs, DMA 1 and DMA 2, shall be located near the inner diameter of the disk; two others, DMA 3 and DMA 4, shall be located near the outer diameter of the disk. The boundaries of the DMAs are indicated in table 7. Each DMA is followed by two blocks of reserved sectors.

--`,,```,,,,````-`-`,,`,,`,`,,`---

Copyright International Organization for Standardization
Provided by IHS under license with ISO
No reproduction or networking permitted without license from IHS Not for Resale

Table 7 - Locations of the DMAs

	Sector No. of the first sector	Sector No. of the last sector	Number of blocks
DMA 1	(030F80)	(030F9F)	2
Reserved	(030FA0)	(030FBF)	2
DMA 2	(030FC0)	(030FDF)	2
Reserved	(030FE0)	(030FFF)	2
DMA 3	(16B480)	(16B49F)	2
Reserved	(16B4A0)	(16B4BF)	2
DMA 4	(16B4C0)	(16B4DF)	2
Reserved	(16B4E0)	(16B4FF)	2

Each DMA shall consist of two ECC blocks followed by two reserved blocks. A Disk Definition Structure (DDS) and a Primary Defect List (PDL) shall be contained in the first ECC block of each DMA (DDS/PDL block). A Secondary Defect List (SDL) shall be contained in the second ECC block of each DMA (SDL block). The contents of the four DMAs shall be identical.

After Initialization (see 17.8.2) of the disk, each DMA shall have the following contents :

- The first sector of each DDS/PDL block shall contain the DDS.
- The second sector of each DDS/PDL block shall be the first sector of the PDL.
- The SDL shall start with the first sector of the SDL block.

The lengths of the PDL and SDL are determined by the number of entries in each list.

The contents of the DDS are specified in 17.2; those of the PDL and SDL are specified in 17.6 and 17.7.

Unused sectors in DMAs shall be set to (FF). All reserved sectors shall be set to (00).

17.2 Disk Definition Structure (DDS)

The DDS shall consist of a table with a length of one sector. It specifies the method of Formatting (see 17.8) of the disk. The DDS shall be recorded in the first sector of each DMA at the end of Formatting of the disk.

The information on the disk structure given in table 8 shall be recorded in each of the four DDSs.

Copyright International Organization for Standardization
Provided by IHS under license with ISO
No reproduction or networking permitted without license from IHS Not for Resale

Table 8 - Byte assignment of the Disk Definition Structure

Byte position	Contents	Number of bytes
0 to 1	DDS Identifier : (0A0A)	2
2	Reserved	1
3	Disk Certification flag	1
4 to 7	DDS/PDL Update Count	4
8 to 9	Number of Groups	2
10 to 15	Reserved	6
16	Group Certification flag for Group 0	64
17	Group Certification flag for Group 1	
…	…	
39	Group Certification flag for Group 23	
40 to 79	Reserved	
80 to 2 047	Reserved	1 968

Bytes 0 to 1- DDS Identifier

This 2-byte field shall be set to (0A0A), indicating DDS Identifier.

Byte 2- Reserved

The byte shall be set to (00)

Byte 3- Disk Certification flag

This 8-bit field shall be as shown in figure 31.

b_7	b_5 b_4	b_2	b_1	b_0
In process	Reserved		User certification	Disk manufacturer certification

Figure 31 - Disk Certification flag

This field shall be set as follows.

Bit b_7 shall be set to
ZERO, if Formatting has been completed
ONE, if Formatting is in process

Bit b_6 shall be set to
ZERO, if Formatting is using full certification (see 17.8.1)
ONE, if Formatting is using partial certification (see 17.8.1)

Bit b_5 shall be set to
ZERO, if Formatting is for the whole disk
ONE, if Formatting is only for a Group
Group certification flags are valid (see Bytes 16-39)

Bits b_4 to b_2 shall be set to 000

Copyright International Organization for Standardization
Provided by IHS under license with ISO
No reproduction or networking permitted without license from IHS
Not for Resale

Bit b_1 shall be set to
ZERO, if the disk has not been certified by a user
ONE, if the disk has been certified by a user

Bit b_0 shall be set to
ZERO, if the disk has not been certified by a manufacturer
ONE, if the disk has been certified by a manufacturer

Note - Bits b_5 to b_7 shall be set to 1xx at the start of Formatting with any certification and shall be reset to 000 at the end of Formatting.

Bytes 4 to 7- DDS/PDL Update Count

This field shall specify the total number of the updating and rewriting operations of the DDS/PDL block. This field shall be set to 0 at the beginning of Initialization, and shall be incremented by 1 when the DDS/PDL block is updated or rewritten. A copy of this DDS/PDL Update Count shall be recorded in Bytes 16-19 of SDL (see 17.7).

Bytes 8 to 9- Number of Groups

This 2-byte field shall be set to (0018), indicating 24 Groups.

Bytes 10 to 15 - Reserved

All bytes shall be set to (00).

Bytes 16 to 39 - Group Certification flag

Each byte shall consist of the same 8-bit field shown in figure 32.

b_7 b_6	b_5 b_2	b_1	b_0
In process	Reserved	User certification	Reserved

Figure 32 - Group certification flag

Bit b_7 shall be set to
ZERO, if Formatting of this Group has been completed
ONE, if Formatting of this Group is in process

Bit b_6 shall be set to
ZERO, if Formatting of this Group in process is using full certification
ONE, if Formatting of this Group in process is using partial certification

Bits b_5 to b_2 shall be set to ZEROs.

Bit b_1 shall be set to
ZERO, if this Group has not been certified by user
ONE, if this Group has ever been certified by user

Bit b_0 shall be set to ZERO.

Bytes 40 to 79 - Reserved

All bytes shall be set to (00).

Bytes 80 to 2 047 - Reserved

All bytes shall be set to (00).

17.3 Spare sectors

Defective sectors in the Data Area shall be replaced by good sectors according to the defect management method described below. The disk shall be formatted before use. Formatting shall be allowed with or without Certification. The total number of spare sectors shall be 65 392.

Defective sectors are handled by a Slipping Algorithm or by a Linear Replacement Algorithm. The total number of entries listed in PDL (see 17.6) and SDL (see 17.7) shall meet the following requirement :

$S_{PDL} + S_{SDL} \leq 16$ $(1 \leq S_{PDL} \leq 15, 1 \leq S_{SDL} \leq 15)$

Copyright International Organization for Standardization
Provided by IHS under license with ISO
No reproduction or networking permitted without license from IHS Not for Resale

$$S_{PDL} = int\left[\frac{\left(E_{PDL} \times 4 + 4\right) + 2\,047}{2\,048}\right]$$

$$S_{SDL} = int\left[\frac{\left(E_{SDL} \times 8 + 24\right) + 2\,047}{2\,048}\right]$$

where,

int [x] is the largest integer not greater than x

- S_{PDL} is the number of sectors containing PDL entries.
- S_{SDL} is the number of sectors containing SDL entries.
- E_{PDL} is the number of PDL entries.
- E_{SDL} is the number of SDL entries.

The number of sectors in a Group listed in the PDL shall not exceed the number of sectors in the Spare Area in the Group.

17.4 Slipping Algorithm

The Slipping Algorithm shall be applied individually to each and every Group in the Data Area if defective sectors are listed in PDL.

A defective data sector registered in PDL shall be replaced by the first good sector following the defective sector, and so causes a slip of one sector towards the end of the Group. The last data sectors in the Group will slip into the spare sector area of the Group. The sector number of the defective sectors is written in the PDLs. The defective sectors shall not be used for recording user data.

The sectors in Spare Area recorded in the PDL shall be slipped if the last data sector slipped into the Spare Area.

The relation between Sector number and Logical Sector number when using Slipping Algorithm is shown in figure 33.

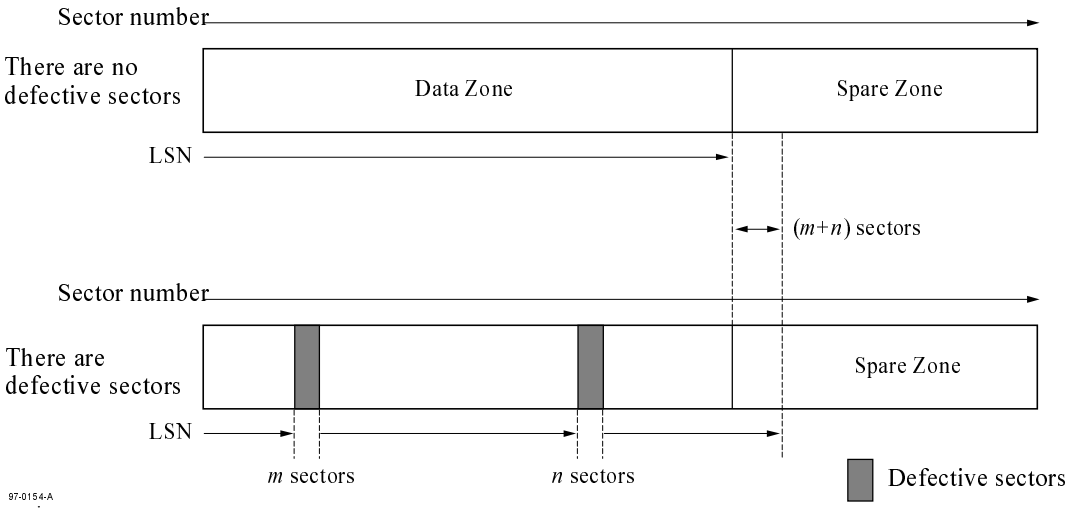

Figure 33 - The relation between Sector numbers and Logical Sector Numbers when using the Slipping Algorithm

17.5 Linear Replacement Algorithm

The Linear Replacement Algorithm is used to handle defective sectors due to overwrite cycles, which are found after Formatting, or defective sectors which cannot be registered in the PDL during Formatting.

Copyright International Organization for Standardization
Provided by IHS under license with ISO
No reproduction or networking permitted without license from IHS
Not for Resale

The replacement shall be performed in units of 16 sectors, called a Data block.

The defective block shall be replaced by the first available good spare block of the Group. If a replacement exists in the SDL for the Group, then the first available good Spare Sector is the good block immediately following the last replacement block recorded in the SDL for the Group. If no replacement block exists in the SDL for the Group, the first available good Spare Block of the is the good block immediately following the last Data Block of the Group. Spare Blocks found to be defective will appear as gaps in the Spare Area. If there is no good spare block left in the Group, viz. there are less than 16 sectors left in the Group, this shall be indicated by setting the Spare Area Full flag to ONE (figure 36) in the SDL for the corresponding Group, and the defective block shall be replaced by the first available good spare block of another Group. In this case, the first sector number of the defective block, and the first sector number of the final replacement block shall be recorded in the SDL as an SDL entry, the Forced Reassignment Marking (FRM, see 17.7) shall be set to ZERO.

If a block to be written is listed in the SDL with the FRM set to ZERO, the data shall be written in a replacement block of the Spare Area pointed to by the SDL.

If a block to be written is listed in the SDL with the FRM set to ONE, the data shall be written in the first available good spare block of the Group. If there is no spare block left in the Group, viz. there are less than 16 sectors left in the Group, the Spare Area Full flag in the SDL of the corresponding Group shall be set to ONE, and the defective block shall be replaced by the first available good spare block of another Group. In this case, the sector number of the first sector in the replacement block in the SDL entry shall be replaced by the sector number of the new replacement block, and the FRM shall be set to ZERO,

When reading the disk, if a Data Block or a Spare Block used as replacement to read, is found to be defective and uncorrectable, and if the disk is not write-inhibited, then the registration of such a defective block and the setting of the FRM are implementation-defined and/or specified by the host.

If such a defective Data block is to be registered, the sector number of the first sector of the defective block shall be registered in the SDL as an SDL entry with the FRM set to ONE. The first sector of the replacement block shall be registered as (000000).

If such a defective Spare block is to be registered, the setting of the FRM of the corresponding SDL entry shall be changed to ONE.

If a Data block is found to be defective after Formatting, it shall be regarded as a defective block and it shall be registered in the SDL.

If a replacement block listed in the SDL is later found to be defective, the direct pointer method shall be applied for a registration into the SDL. In this method, the SDL entry in which the defective replacement block has been registered shall be modified by changing the address of the replacement block from the defective one to a new one.

At the time of updating the SDL, the SDL Update Count shall be incremented by 1.

The relation between Sector number and Logical Sector number when using Linear Replacement is shown in figure 34.

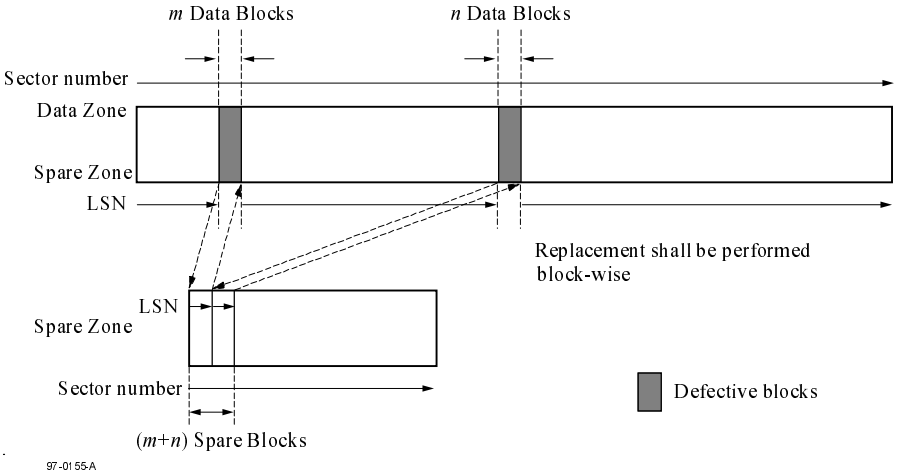

Figure 34 - The relation between Sector number and Logical Sector number when using Linear Replacement

17.6 Primary Defect List (PDL)

The Primary Defect List (PDL) shall always be recorded in each DDS/PDL block; it may be empty.

Copyright International Organization for Standardization
Provided by IHS under license with ISO
No reproduction or networking permitted without license from IHS
Not for Resale

A list of defective sectors may be obtained by means other than Certification of the disk.

The PDL shall contain the entries of defective sectors identified at Formatting. Each entry shall specify the Entry type and the Sector number of the corresponding defective sector. The Sector numbers shall be listed in ascending order. The PDL shall be recorded in the minimum number of sectors necessary, and it shall begin in Byte 0 of the first sector of the PDL. All unused bytes of the last sector of the PDL shall be set to (FF). All unused sectors in the DDS/PDL block shall be recorded with data set to (FF). The information in table 9 shall be recorded in each PDL.

In the case of multiple-sector PDL, the list of entries of the defective sectors shall continue with the first byte of the second and subsequent sectors. Thus, the PDL Identifier and the number of entries of the PDL shall be present only in the first sector of the PDL.

In an empty PDL, the Number of entries in PDL (Bytes 2 and 3 of the first PDL sector) shall be set to (0000) and Bytes 4 to 2 047 shall be set to (FF).

The Entry type specifies the origin of the defective sectors :

– Defective sectors defined by the disk manufacturer (P-list),
– Defective sectors found during the Certification process (G1-list)
– Defective sectors which are transferred from the SDL without Certification process (G2-list).

The P-list shall be preserved after any Formatting.

Table 9 - Contents of the PDL

Byte position	Contents	Number of bytes
0 and 1	PDL Identifier : (0001)	2
2 and 3	Number of entries in the PDL	2
4 to 7	The first PDL entry	4
8 to 11	The second PDL entry	4
---	---	---
n to *n*+3	The last PDL entry	4

Bytes 0 and 1 - PDL Identifier

This field shall be set to (0001), indicating PDL Identifier

Bytes 2 and 3 - Number of entries in the PDL

This field shall specify the number of entries in the PDL.

PDL entries

Each 32-bit field shall be partitioned as shown in figure 35.

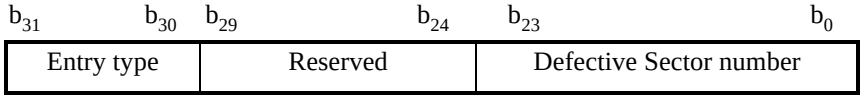

Figure 35 - PDL entry

Bits b_{31} to b_{30} shall be set to

00, indicating a P-list
10, indicating a G1-list
11, indicating a G2-list

01 is prohibited by this International Standard.

Bits b_{29} to b_{24} shall be set to ZERO

Bits b_{23} to b_0 shall specify the Sector number of the defective sector.

--`,,```,,,,````-`-`,,`,,`,`,,`---
Copyright International Organization for Standardization
Provided by IHS under license with ISO
No reproduction or networking permitted without license from IHS
Not for Resale

17.7 Secondary Defect List (SDL)

The Secondary Defect List (SDL) shall always be recorded in each SDL block; it may be empty.

The SDL shall contain entries, which contain the sector number of the first sector of the defective ECC blocks and the sector number of the first sector of the spare blocks which replace them. Each entry in the SDL contains 8 bytes, viz. three each for the sector number of the first sector in a defective block and for that of its replacement block, one byte for Forced Reassignment Marking (FRM) and one reserve byte.

The sector numbers of the first sector in the defective blocks shall be listed in ascending order.

The SDL shall be recorded in the minimum number of sectors necessary. All unused bytes of the last sector of the SDL shall be set to (FF). All unused sectors in the SDL block shall be recorded with data of (FF). The information in table 10 shall be recorded in each of four SDLs.

If a replacement block listed in the SDL is later found to be defective, the direct pointer method shall be applied for registration into the SDL. In this method, the SDL entry in which the defective replacement block has been registered shall be modified by changing the sector number of the first sector of the replacement block from the defective replacement block to a new one. Therefore, the number of entries in the SDL shall remain unchanged by deteriorated sectors.

In the case of a multiple-sector SDL, the list of entries shall continue with BP 0 of the second and subsequent sectors. Thus, SDL Identifier, SDL Update Count, Spare-Area Full flags and Number of entries in SDL shall be present only in the first sector of the SDL.

Table 10 - Contents of the SDL

Byte position	Contents	Number of bytes
0 and 1	SDL Identifier : (0002)	2
2 and 3	Reserved	2
4 to 7	SDL Update Count	4
8 to 15	Spare Area Full flags	8
16 to 19	DDS/PDL Update Count	4
20 and 21	Reserved	2
22 and 23	Number of entries in SDL	2
24 to 31	The first SDL entry	8
---	---	
m to *m*+7	The last SDL entry	8

Bytes 0 and 1 - SDL Identifier

This field shall be set to (0002), indicating SDL Identifier

Bytes 2 and 3 - Reserved

All bytes shall be set to (00).

Bytes 4 to 7 - SDL Update Count

This field shall specify the total number of the updating operations for SDL block, in binary notation. This field shall be set to 0 at the Initialization (see 17.8.2), and shall be incremented by 1 when the contents of the SDL is updated.

Bytes 8 to 15 - Spare Area Full flags

These flags shall specify whether spare blocks of the corresponding Group are left.

Each bit of the flag corresponds each Group as shown in figure 36.

b_{63} b_{24}	b_{23}	b_{22}	b_{21}	b_{20} b_3	b_2	b_1	b_0
Reserved	Group 23	Group 22	Group 21	. . . . .	Group 2	Group 1	Group 0

Figure 36 - Spare Area Full flags

Copyright International Organization for Standardization
Provided by IHS under license with ISO
No reproduction or networking permitted without license from IHS Not for Resale

Each bit corresponding to the Group shall be set to

ONE, if no spare block is left in the Group
ZERO, if Spare blocks are left in the Group

Bytes 16 to 19 - DDS/PDL Update Count

This field shall specify the total number of the updating and rewriting operations for DDS/PDL block. This field shall be set to 0 at the beginning of Initialization, and shall be incremented by 1 when the DDS/PDL block is updated or rewritten. All the DDS/PDL blocks and the SDL blocks shall have the identical Update Count value after completion of Formatting.

Bytes 20 and 21 - Reserved

All bytes shall be set to (00).

Bytes 22 and 23 - Number of entries in the SDL

These bytes shall specify the number of entries in the SDL.

SDL entry

Each 8-byte field shall be partitioned into several fields as shown in figure 37.

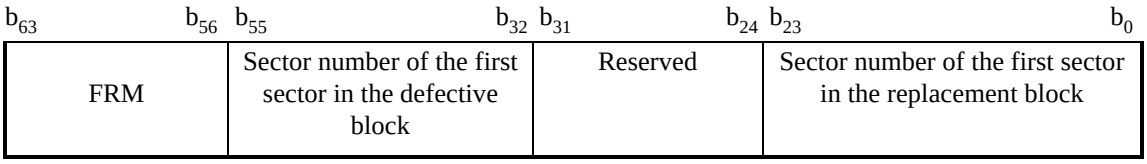

Figure 37 - SDL entry

Bit b_{63}	shall be set to ZERO, if the replacement block is assigned and not defective ONE, if the replacement block is either not assigned or assigned but defective
Bits b_{62} to b_{56}	shall be set to ZERO
Bits b_{55} to b_{32}	shall specify the sector number of the first sector of the defective block
Bits b_{31} to b_{24}	shall be set to ZERO
Bits b_{23} to b_0 assigned,	shall either specify the sector number of the first sector of the replacement block if or shall be set to all ZEROs, if the replacement block is not assigned

17.8 Formatting of the disk

Disks shall be formatted before their use. If there is no DMA recorded on the disk before the Formatting process, the process shall be regarded as Initialization. If there are DMAs recorded on the disk before the Formatting process, the process shall be regarded as Re-initialization.

After any Formatting of the disk, the four DMAs shall be recorded. The Data Area shall be partitioned into 24 Groups, see 16.3.3. Each Group shall contain a User Area and a Spare Area. The sectors in the Spare Area can be used as replacements for defective sectors. Formatting is performed by either Initialization or Re-initialization. Either may include Certification of the Groups whereby defective sectors are identified and skipped.

All DDS parameters shall be recorded in the four DDS sectors. The PDL and SDL shall be recorded in the four DMAs. All reserved blocks following each DMA shall be filled with (00). The requirements for the recording of the PDLs and SDLs are stated in table 9 and table 10.

Copyright International Organization for Standardization
Provided by IHS under license with ISO
No reproduction or networking permitted without license from IHS
Not for Resale

After Formatting, any of the Data blocks and Spare blocks, which may be allocated as a result of the Slipping Algorithm (see 17.4), shall be in either of the following status.

a) A Data block and Spare block contains a set of 16 Physical Data Units that organizes a complete ECC block defined in 13.3. The Physical Data Unit may be written before the Re-initialization.

b) All of the sectors in a Data block and Spare block are unwritten.

c) All of the sectors in a Data block and Spare block contains a data field number in the range (00) to (0F), which may be written during certification process.

After Formatting, three types of entries may exist in PDL, which are P-list, G1-list and G2-list. The types are identified by the Entry type in every entry (see table 9). SDL may also contain entries.

When the disk is certified, the Certification shall be applied to the sectors in the User Area and the Spare Area.

The method of Certification is not stated by this International Standard. It may involve writing and reading the sectors in the User Area and the Spare Area.

Defective sectors in User Area and Spare Area found during Certification shall be listed in the G1-list of PDL and shall be handled by the Slipping Replacement Algorithm. Defective sectors shall not be used for reading or writing. Guideline for replacing defective sectors is given in annex L.

If the Formatting process involves certification (see 17.8.1) or other data writing process, the data field number shall be between (000000) to (000000F). The Disk certification flag and, if necessary, the Group certification flag shall be set during the certification in-process. This procedure allows the system to detect the occurrence of a failure during previous Formatting involving the certification or other data writing process.

Spare blocks are also allocates at formatting, but the LSN is not assigned. A Spare block is used to replace a defective Data block or to substitute a Spare block. A Spare block is allocated in a Spare Area at Formatting.

17.8.1 Full and Partial Certification

There are two types of Certifications : full Certification and partial Certification. In case of full Certification, all the sectors in the User Area and the Spare Area are examined. In case of partial Certification, only defective blocks listed in the G2-list of the PDL and SDL are examined. Other blocks in the Spare Area which are not listed in the G2-list of the PDL or in the SDL may need to be certified.

17.8.2 Initialization

If there are no DMA recorded on the disk, the disk shall be initialized. In initialization, the DDS/PDL Update Count and the SDL Update Count shall be set to 0. In the case of Initialization by the disk manufacturer, the defective sectors found during Initialization shall be listed in the P-list of PDL. In the case of Initialization by other than the disk manufacturer, the defective sectors found during Initialization shall be listed in the G1 list of PDL. In both cases, not only the defective sector in the User Area, but defective sectors in the Spare Area shall also be listed in the PDL.

A certification process described in 17.8.1 may be applied during Initialization. If the certification process is applied by the disk manufacturer, the Disk Manufacturer Certification field in the Disk Certification flag shall be set to ONE. If the full certification process is applied for the whole disk by other than the disk manufacturer, the User certification field in the Disk Certification flag shall be set to ONE.

If the full certification process is applied for a Group, User certification field in the corresponding Group Certification flag shall be set to ONE. If the User Certification field of all the Group Certification flag has been set to ONE, the User certification field of the Disk Certification flag shall be set to ONE.

The number of sectors in a Group to be listed in the PDL shall not exceed the number of sectors in the Spare Area in that Group. If the number of defective sectors encountered within a Group exceeds the number of sectors in the Spare Area in that Group, those defective sectors which cannot be registered in the PDL shall be registered in the SDL and the Spare Area Full flag corresponding to that Group shall be set to ONE.

17.8.3 Re-initialization

If DMAs are already recorded on the disk before formatting, the Formatting is regarded as re-initialization.

Throughout re-initialization process, the P-list shall be preserved, the DDS/PDL Update Count and SDL Update Count shall be preserved.

Copyright International Organization for Standardization
Provided by IHS under license with ISO
No reproduction or networking permitted without license from IHS Not for Resale

The re-initialization process may involve processes of

1) applying a full certification to exclude the G1-list from the PDL, and/or to register the new PDL entries found during certification into G1-list of the PDL,

2) transforming SDL entries into G2-list of the PDL,

3) excluding G2-list from the PDL and excluding SDL entries,

4) applying a partial certification to exclude G2-list from the PDL and to exclude SDL entries.

In process (1), the G2-list of PDL shall always be excluded. The defective sectors found during Certification shall be registered in the G1-list of the PDL. This process does not always require the disk Certification with writing operation. The modification of G1-list of PDL entries will result in the ECC block miss-alignment, which is against the required condition in 17.8, i.e. state a), b) or c). Therefore, the system that formats the disk should take care to keep the required condition. If the full Certification process is applied for the whole disk by other than the disk manufacturer, User Certification field in the Disk Certification flag shall be set to ONE. If the full Certification process is applied for a Group, User Certification field in the corresponding Group Certification flag shall be set to ONE. If the User Certification field of all the Group Certification flag has been set to ONE, the User Certification field of the Disk Certification flag shall be set to ONE.

In process (2), the G1-list of PDL shall be preserved and all of the 16 sectors of a defective block listed in SDL shall be registered in G2-list of PDL as 16 PDL entries.

Process (3) allows to revert the PDL entries quickly to the latest certified.

In process (4), the partial Certification performs certification only for defective blocks listed in the G2-list of the PDL and SDL, and register actual defective sectors in the G1-list of the PDL. Other blocks in the Spare Area which are not listed in the G2-list of the PDL or in the SDL may need to be certified. The modification of G1-list of PDL entries will result in the ECC block miss-alignment, which is against the required condition in 17.8, states a), b) or c). Therefore, the system that formats the disk should take care to keep the required condition.

In any case of above, the number of sectors in a Group to be listed in the PDL shall not exceed the number of sectors in the Spare Area in that Group. If the number of defective sectors encountered within a Group exceeds the number of sectors in the Spare Area in that Group, those defective sectors which cannot be registered in the PDL shall be registered in the SDL and the Spare Area Full flag corresponding to that Group shall be set to ONE.

When there exists PDL entries in PDL, these sectors shall be skipped for use even if both of User Certification field and Disk manufacturer Certification field is ZERO. This process is same as the process specified in 17.8

17.8.4 Data field number resulting from Initialization and Re-initialization

a) Initialization with Certification

a1) The Data Field Numbers of the sectors of an unused block shall be in the range (000000) to (00000F)

a2) When such an unused block is used, then the Data Field Numbers of the sectors shall equal {LSN + (031000) }

b) Initialization without Certification

b1) The Data Field Numbers of the sectors of an unused block are unwritten

b2) When an unused block is used, then the Data Field Numbers of the sectors shall equal {LSN + (031000) }

c) Re-initialization of a disk initialized with Certification

c1) Re-initialization with Certification

c1.1) The Data Field Numbers of the sectors of an unused block shall be in the range (000000) to (00000F)

c1.2) When such an unused block is used, then the Data Field Numbers of the sectors shall equal {LSN + (031000) }

c2) Re-initialization without Certification

c2.1) The Data Field Number of the sectors of an unused block shall either be a multiple of (10) for the first sector and the following sectors shall be consecutively numbered with a block, or these Data Field Numbers shall be in the range (000000) to (00000F)

c2.2) When such an unused block is used, then the Data Field Numbers of the sectors shall equal {LSN + (031000) }

--`,,```,,,,````-`-`,,`,,`,`,,`---

Copyright International Organization for Standardization
Provided by IHS under license with ISO
No reproduction or networking permitted without license from IHS Not for Resale

d) Re-initialization of a disk not certified

d1) Re-initialization with Certification

d1.1) The Data Field Numbers of the sectors of an unused block shall be in the range (000000) to (00000F)

d1.2) When such an unused block is used, then the Data Field Numbers of the sectors shall equal {LSN + (031000) }

d2) Re-initialization without Certification

d2.1) The Data Field Number of the sectors of an unused block shall either start with a multiple of (10) for the first sector and the following sectors shall be consecutively numbered within a block, or these Data Field Numbers shall be unwritten

d2.2) When such an unused block is used, then the Data Field Numbers of the sectors shall equal {LSN + (031000) }

e) Re-initialization of an already re-initialized disk

e1) Disk obtained by the procedure of either c1), c2) or d1) shall be handled as described in c)

e2) Disks obtained from the procedure of d2) shall handled as described in d).

17.9 Write procedure

When writing data in the sectors of a Group, a defective sector listed in the PDL shall be skipped, and the data shall be written in the next good data sector according to the Slipping Algorithm.

If a block to be written is found to be defective, the defective block shall be replaced by the first available good spare block, according to the Linear Replacement Algorithm.

If a block to be written is listed in the SDL with an FRM of ZERO, the data shall be written to a replacement block in the Spare Area pointed by the SDL according to the Linear Replacement Algorithm.

If a block to be written is listed in the SDL with an FRM of ONE, the Block shall be replaced by the first available good spare block, according to the Linear Replacement Algorithm.

17.10 Read procedure

17.10.1 Blank ECC block

A blank ECC block is a Block which meets either of following two conditions.

– The Data field number in each sector of the ECC block is between (000000) and (00000F).
– The Recording field in each sector is unwritten.

A blank ECC block contains no user data.

17.10.2 Read procedure

When the data is read from the sectors of a Group, a defective sector listed in the PDL shall be skipped, and the data shall be read from the next data sector according to the Slipping Algorithm.

If a Data block to be read is listed in the SDL with either an FRM set to ZERO or ONE, and the sector number of the first sector in the replacement Block is other than (000000), the data shall be read from a replacement block in the Spare Area pointed by the SDL according to the Linear Replacement Algorithm.

If a Data block to be read is listed in the SDL with Forced Reassignment Marking set to ONE, and the sector number of the first sector in the replacement Block is (000000), the data shall be read from the Data block.

If a Block to be read is found to be defective and correctable, and the disk is not write-inhibited, the defective block may be replaced by the first available good spare block according to the Linear Replacement Algorithm.

If a Data block to be read is found to be defective and uncorrectable, and the disk is not write-inhibited, the defective block may be registered to the SDL with the Forced Reassignment Marking set to ONE, according to the Linear Replacement Algorithm.

Copyright International Organization for Standardization
Provided by IHS under license with ISO
No reproduction or networking permitted without license from IHS Not for Resale

If a Spare block used as a replacement Block to be read is found defective and uncorrectable, and the drive is not write-inhibited, the FRM of the corresponding SDL entry may be set to ONE.

Section 4 - Characteristics of embossed information

18 Method of testing

The format of the embossed information on the disk is defined in section 3. Clause 19 to 21 specify the requirements for the signals from lands and grooves, Header fields and Embossed data, as obtained when using the measuring Optical Head in 9.1.

Clause 19 to 21 specify only the average quality of the embossed information. Local deviations from the specified values, called defects, can cause tracking errors, erroneous Header fields or errors in the Data fields.

18.1 Environment

All signals in clauses 19 to 21 shall be within their specified ranges with the disk in the range of allowed environmental conditions for use defined in 8.1.2.

18.2 Reference Drive

All signals specified in clauses 19 to 21 shall be measured in the indicated channels of the reference drive. The drive shall have the following characteristics for the purpose of these tests.

18.2.1 Optics and mechanics

The focused optical beam shall have the properties defined in 9.1.

18.2.2 Read power

The Read power is the optical power incident on the entrance surface of the disk and used for reading the information. The Read power shall be given in the Control Data Zone (see 16.2.6).

The actual power shall be within 10 % of the given power.

18.2.3 Read channels

The drive shall have a Read channel 1, in which the total amount of light in the exit pupil of the objective lens is measured. The read signal from the Read channel 1 is not equalized except when measuring jitter.

The drive shall have a Read channel 2, in which the differential output of the quadrant photo detectors is measured. The read signal from the Read channel 2 is not equalized except when measuring jitter (see 9.4).

18.2.4 Tracking channel

The drive shall have a Tracking channel in which the sum output and differential output of the quadrant photo detectors are measured.

18.2.5 Tracking

During the measurement of the signals, the axial tracking error between the focus of the optical beam and Recording layer shall not exceed

e_{max} (axial) = 0,23 µm

and the radial tracking error between the focus of the optical beam and the centre of a track shall not exceed

e_{max} (radial) = 0,022 µm

18.3 Definition of signals

All signals are linearly related to currents through a photo-detector and are therefore linearly related to the optical power falling on the detector.

The signals from the two halves of the split photo-detector are indicated by I_1 and I_2. The split photo-detector separator shall be parallel to the projected track axis. The signals in the Tracking channel are referenced to the signal $(I_1 + I_2)_a$, which is the sum of the signals obtained from the unrecorded, ungrooved area in the Information Zone (see 16.1), such as the Mirror field in a sector.

Copyright International Organization for Standardization
Provided by IHS under license with ISO
No reproduction or networking permitted without license from IHS Not for Resale

The signal in Read channel 1 is the sum of I_1 and I_2 referenced to I_0, which is the signal (I_1 + I_2) in Read channel 1 from the unrecorded and ungrooved area in the Information Zone, such as the Mirror field in a sector.

The signal in Read channel 2 is the difference of I_1 and I_2 referenced to I_0.

Figures 38 to 45 show the signals specified in clauses 19 to 21.

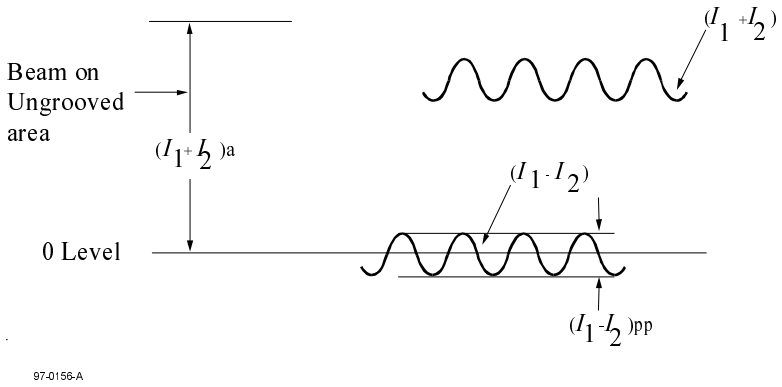

Figure 38 - Signals from lands and grooves in Tracking channel

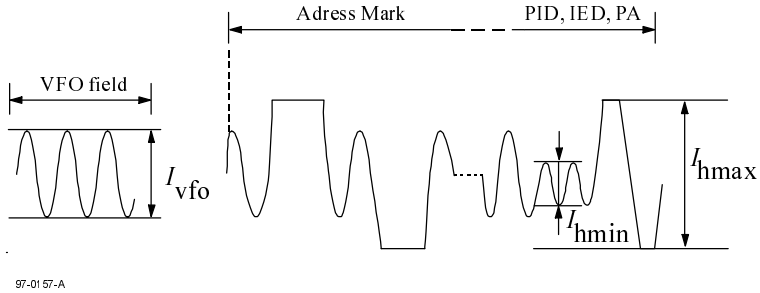

Figure 39 - Signals from Header field in Read channel 2

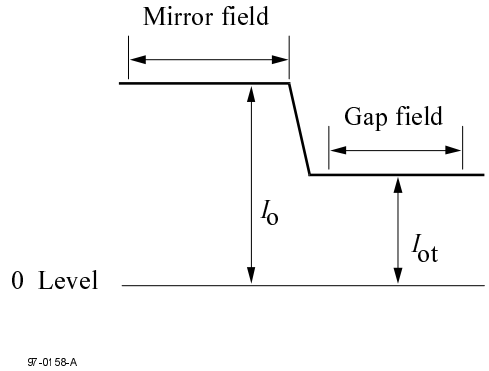

Figure 40 - Signals from Mirror field and Gap field in Read channel 1

Copyright International Organization for Standardization
Provided by IHS under license with ISO
No reproduction or networking permitted without license from IHS
Not for Resale

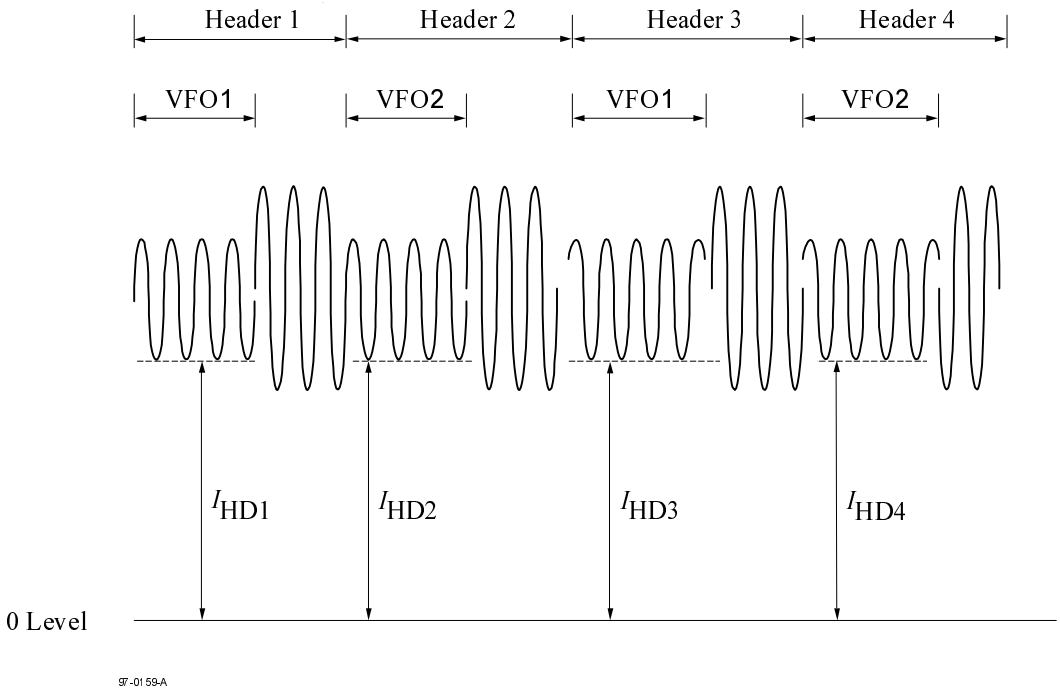

Figure 41 - Signals from Header 1, Header 2, Header 3 and Header 4 in Read channel 1

Copyright International Organization for Standardization
Provided by IHS under license with ISO
No reproduction or networking permitted without license from IHS
Not for Resale

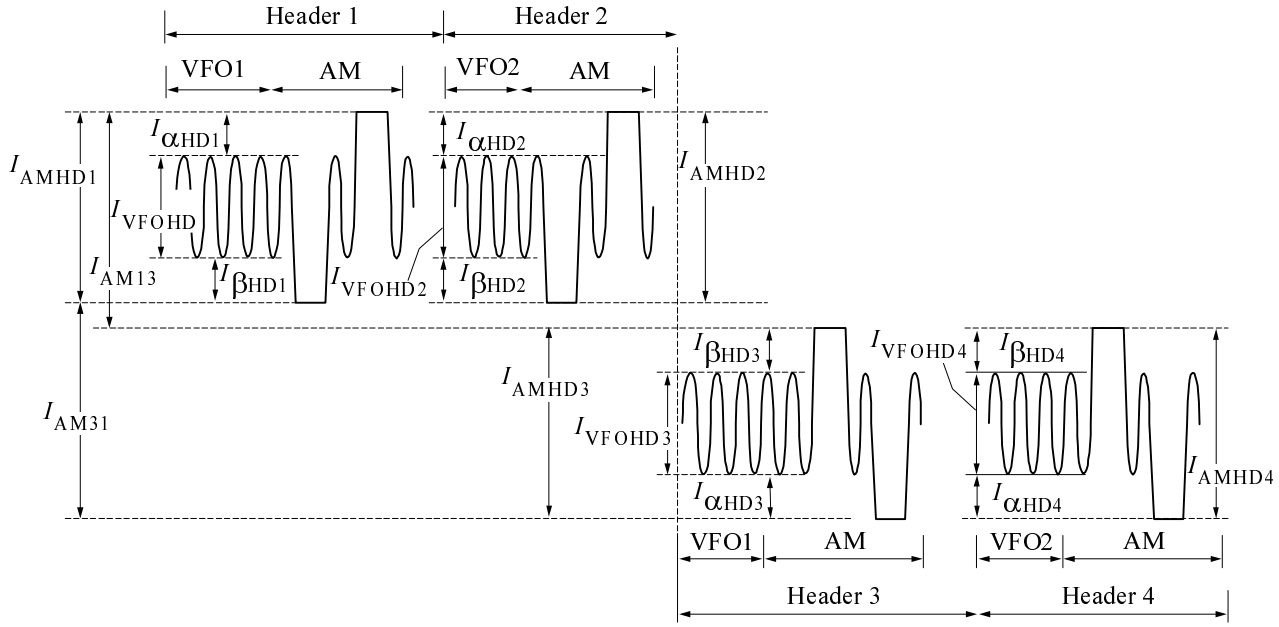

(a) on groove sector

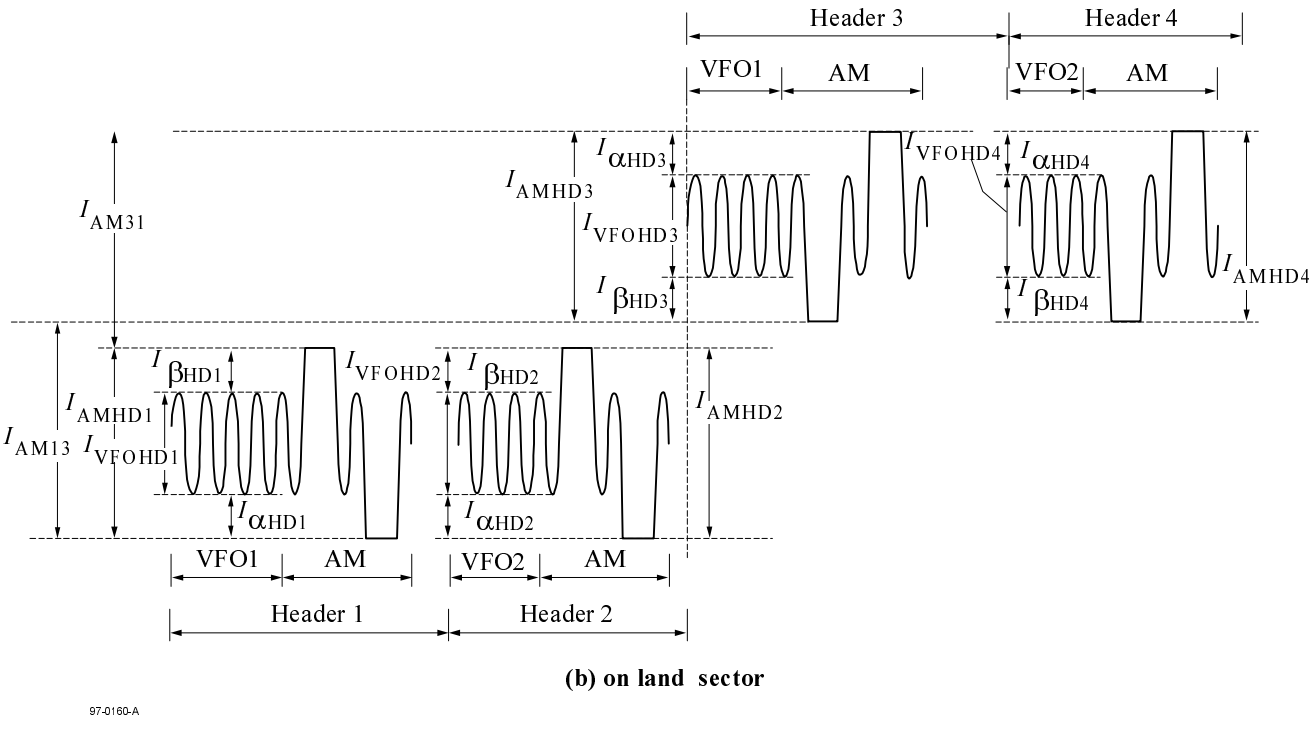

(b) on land sector

97-0160-A

Figure 42 - Signals from Header 1, Header 2, Header 3 and Header 4 in Read channel 2

Copyright International Organization for Standardization
Provided by IHS under license with ISO
No reproduction or networking permitted without license from IHS
Not for Resale

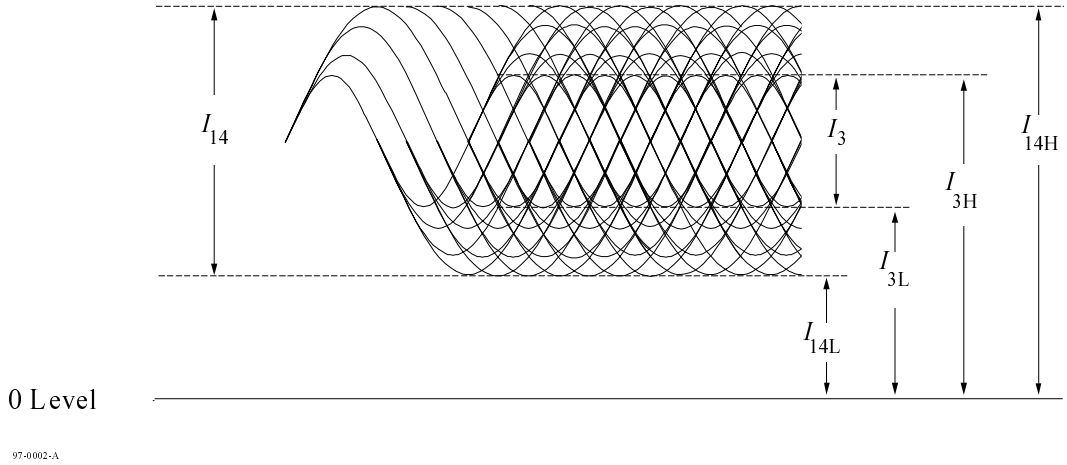

Figure 43 - Signals in Read channel 1

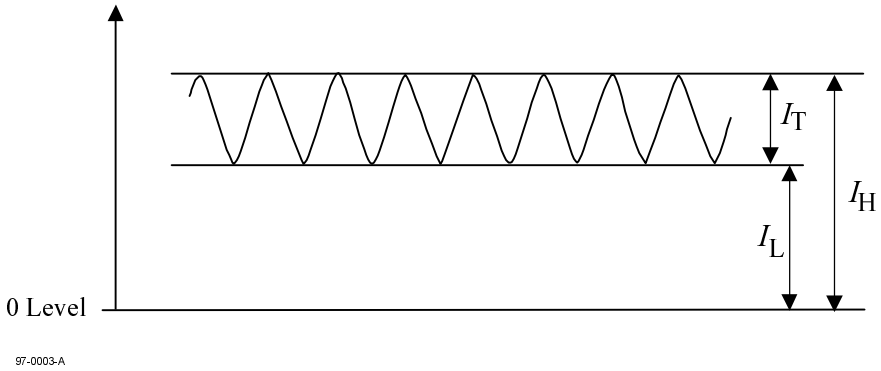

Figure 44 - Track-crossing signal from Embossed Area

Copyright International Organization for Standardization
Provided by IHS under license with ISO
No reproduction or networking permitted without license from IHS
Not for Resale

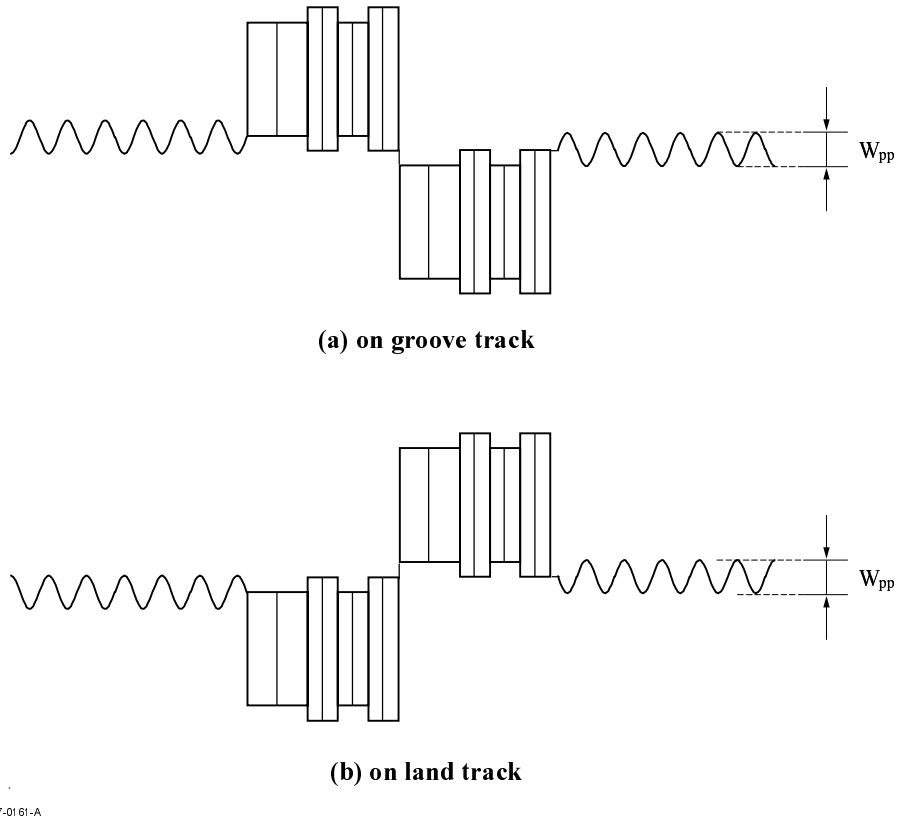

Figure 45 - Schematic representation of the signals from a groove or a land in Read channel 2

19 Signals from lands and grooves

The signals (I_1+I_2) and (I_1-I_2) in the Tracking channel shall be low pass filtered with a cut-off frequency of 30 kHz. The low pass filter is a 1st-order filter. This condition shall not apply to the measurement of $(I_1+I_2)_a$.

The shape of the grooves shall be such that the following requirements for circular polarization are met.

19.1 Push-pull signal

The push-pull signal is the difference signal (I_1-I_2) in the Tracking channel, when the light beam crosses the tracks in both of written and unwritten Recording fields of Rewritable Area. The peak-to-peak value of the push-pull signal shall meet the following requirements :

$$0{,}35 \leq \frac{\left(I_1 - I_2\right)_{pp}}{\left(I_1 + I_2\right)_a} \leq 1{,}05$$

19.2 Divided push-pull signal

The first term of the divided push-pull signal is the peak-to-peak amplitude derived from the instantaneous level of (I_1-I_2) when the light beam crosses the tracks in both of the written and unwritten Recording fields of the Rewritable Area divided by the instantaneous level of (I_1+I_2) when the light beam crosses these tracks.

The second term of the divided push-pull signal is the ratio of the minimum peak-to-peak amplitude derived from the instantaneous level of (I_1-I_2) divided by the instantaneous level of (I_1+I_2) when the light beam crosses the tracks in both of the written and unwritten Recording fields of the Rewritable Area to the maximum peak-to-peak amplitude derived from the instantaneous level of (I_1-I_2) divided by the instantaneous level of (I_1+I_2) when the light beam crosses these tracks.

The tracking servo shall operate in open-loop mode during this measurement.

The first term shall meet the following requirements :

Copyright International Organization for Standardization
Provided by IHS under license with ISO
No reproduction or networking permitted without license from IHS Not for Resale

$$1{,}10 \le \left[\frac{(I_1 - I_2)}{(I_1 + I_2)}\right]_{pp} \le 1{,}65$$

The second term shall satisfy:

$$\frac{\left\{\left[\frac{I_1 - I_2}{I_1 + I_2}\right]_{pp}\right\}_{min.}}{\left\{\left[\frac{I_1 - I_2}{I_1 + I_2}\right]_{pp}\right\}_{max.}} \ge 0{,}70$$

19.3 On-track signal

The on-track signal I_{ot} is the signal in Read channel 1 when the light beam is following a groove or a land in the Recording field of the Rewritable Area. The on-track signal I_{ot} measured in the unwritten Gap field shall meet the following requirements :

a) On groove track

$$0{,}56 \le \frac{I_{ot}}{I_0} \le 0{,}84$$

b) On land track

$$0{,}56 \le \frac{I_{ot}}{I_0} \le 0{,}84$$

In addition the condition

$$0{,}9 \le \frac{(I_{ot})_{groove}}{(I_{ot})_{land}} \le 1{,}1$$

shall be satisfied, on groove tracks as well as on land tracks.

19.4 Phase depth

The phase depth of the grooves shall be less than 90°.

19.5 Wobble signal

The wobble signal is the signal in Read channel 2 when the light beam is following a groove or a land in the Recording fields of the Rewritable Area.

The narrow-band signal-to-noise ratio of the wobble signal shall meet the following requirements.

a) On groove track

Narrow-band signal-to-noise ratio shall be at least 20 dB (a resolution bandwidth of 3 kHz)

b) On land track

Narrow-band signal-to-noise ratio shall be at least 20 dB (a resolution bandwidth of 3 kHz)

The wobble signal amplitude W_{pp} shall meet the following requirements, when measured in the unrecorded area.

a) On groove track

$$0{,}05 \le \frac{W_{pp}}{(I_1 - I_2)_{pp}} \le 0{,}10$$

Copyright International Organization for Standardization
Provided by IHS under license with ISO
No reproduction or networking permitted without license from IHS Not for Resale

b) On land track

$$0{,}05 \leq \frac{W_{pp}}{(I_1 - I_2)_{pp}} \leq 0{,}10$$

$(I_1 - I_2)_{pp}$ is the peak to peak amplitude of $(I_1 - I_2)$ in the Tracking channel when the light beam crosses the tracks in an unwritten recordable Recording field.

20 Signals from Header fields

The signals obtained from the Header fields in the Rewritable Area shall be measured by Read channel 2 in the Reference Drive.

The signal from the Header field is defined as the peak-to-peak value of the signal in Read channel 2.

The jitter shall be measured for each of the groove tracks and the land tracks according to the following procedure.

- Read the signal from approximately 8 bytes of the VFO 1 field preceding the Address Mark to the PA 2 field in the Header 1 field and Header 2 field under the conditions specified in 18.2.
- Read the signal from approximately 8 bytes of the VFO 1 field preceding the Address Mark to the PA 2 field in the Header 3 field and Header 4 field under the conditions specified in 18.2.

The jitter is the standard deviation σ of the time variation of digitized data passed through the Read channel 2 specified in 18.2.3. The jitter of the leading edge and trailing edge is measured relative to the PLL clock and normalized by the Channel bit clock period.

The jitter shall not exceed 8,5 % of the Channel bit clock period, when measured according to annex F.

20.1 VFO 1 and VFO 2

The signal I_{vfo} from the marks in the VFO 1 and VFO 2 fields shall meet the following requirements :

$$\frac{I_{vfo}}{I_0} \geq 0{,}25$$

In addition the condition

$$\frac{I_{vfo}}{I_{hmax.}} \geq 0{,}50$$

shall be satisfied within each Header field, where $I_{hmax.}$ is the maximum signal from marks of the Header fields defined in clause 20.

20.2 Address Mark, PID, PED and Postamble

The signal I_h from marks in the Address Mark, PID, PED and Postamble fields shall meet the following requirements :

$$\frac{I_{hmin.}}{I_0} \geq 0{,}10$$

$$\frac{I_{hmax.}}{I_0} \geq 0{,}30$$

$$\frac{I_{hmin.}}{I_{hmax.}} \geq 0{,}30$$

The last requirement applies over any Header field. The signals I_{min} and $I_{hmax.}$ are the signals with minimum and maximum amplitude in each of Header 1, Header 2, Header 3 and Header 4 in a sector.

Copyright International Organization for Standardization
Provided by IHS under license with ISO
No reproduction or networking permitted without license from IHS Not for Resale

20.3 Signals from Header 1, Header 2, Header 3 and Header 4

Signals from Header 1, Header 2, Header 3 and Header 4 in Read channel 2 may be used to detect the boundary of the land track and groove track, and signals from Header 1, Header 2, Header 3 and Header 4 in Read channel 1 may be used to compensate for the tracking offset.

The signals from Header 1, Header 2, Header 3 and Header 4 of groove sector in Read channel 2 are shown in figure 42. The signals from Header 1, Header 2, Header 3 and Header 4 of land sector in Read channel 2 are shown in figure 42.

The signals from Header 1 and Header 2 of groove sector have opposite polarity to those of land sector in Read channel 2. The signals from Header 3 and Header 4 of groove sector have opposite polarity to those of land sector in Read channel 2.

The signals from Header 1, Header 2, Header 3 and Header 4 in Read channel 2 shall meet the following requirements.

$$0{,}9 \le \frac{I_{AMHD2}}{I_{AMHD1}} \le 1{,}1$$

$$0{,}9 \le \frac{I_{AMHD4}}{I_{AMHD3}} \le 1{,}1$$

$$\frac{I_{AM13}}{I_{AMHD1}} \ge 0{,}8$$

$$\frac{I_{AM31}}{I_{AMHD3}} \ge 0{,}8$$

The following requirements shall also be met.

$- 0{,}10 \le (I_{\beta HD1} - I_{\alpha HD1}) / 2I_{AMHD1} \le 0{,}10$
$- 0{,}10 \le (I_{\beta HD2} - I_{\alpha HD2}) / 2I_{AMHD2} \le 0{,}10$
$- 0{,}10 \le (I_{\beta HD3} - I_{\alpha HD3}) / 2I_{AMHD3} \le 0{,}10$
$- 0{,}10 \le (I_{\beta HD4} - I_{\alpha HD4}) / 2I_{AMHD4} \le 0{,}10$

The signals from Header 1, Header 2, Header 3 and Header 4 in Read channel 1 shall meet the following requirements (see figure 41).

$$|[(I_{HD1} + I_{HD2}) - (I_{HD3} + I_{HD4})]/2I_0 | \le 0{,}05$$

The signals from Header 1, Header 2, Header 3 and Header 4 in Read channel 1 shall meet the following requirements (see figure 41).

$0{,}10 \le |\Delta[(I_{HD1} + I_{HD2}) - (I_{HD3} + I_{HD4})]/2I_0 |$: at 0,1 µm radial offset.

20.4 Phase depth

The phase depth of the embossed pits shall be less than 90°.

21 Signals from Embossed Area

21.1 High Frequency (HF) signal

The HF signal is the signal from marks in the Embossed Area measured in the Read channel 1. See figure 43 and annex F.

21.1.1 Modulated amplitude

The peak to peak value generated by the largest length of mark in figure 43 is I_{14} and the peak value corresponding to HF signal before high-pass filtering is I_{14H}. The 0 Level is the no reflection level. The peak-to-peak value of the shortest wavelength is I_3.

Above parameters shall satisfy following specifications.

I_{14} / I_{14H} : 0,35 min.
I_3 / I_{14} : 0,35 min.

Copyright International Organization for Standardization
Provided by IHS under license with ISO
No reproduction or networking permitted without license from IHS Not for Resale

$(I_{14H\ max.} - I_{14H\ min.}) / I_{14H\ max.}$

Within one disk : 0,33 max.
Within one revolution : 0,15 max.

Where I_{Hmax} and I_{Hmin} are the maximum and the minimum values of I_{14H} within a disk or a revolution.

21.1.2 Signal asymmetry

The value of asymmetry shall satisfy the following specifications.

$-0,05 \leq [(I_{14H} + I_{14L}) - (I_{3H} + I_{3L})] / 2\,(I_{14H} - I_{14L}) \leq 0,15$

21.1.3 Cross-track signal

Cross-track signal is derived from the HF signal which is low pass filtered with a cut-off frequency of 30 kHz when the light beam crosses the tracks. The low pass filter is a 1st-order filter. See figure 44.

The signal shall satisfy the following specifications.

$I_T = I_H - I_L$

$I_T / I_H = 0,10$ min.

21.2 Jitter

The jitter is the standard deviation σ of the time variation of the binarized data passed through the Read Channel 1 specified in 18.2.3. The jitter of the leading and the trailing edge is measured relative to the PLL clock and normalized by the Channel bit clock period.

The jitter shall not exceed 8,0 % of the Channel bit clock period, when measured according to annex F.

21.3 Servo signal

Output currents of each quadrant photo detector element of the Optical Head are I_a, I_b, I_c and I_d. See figure 46.

21.3.1 Differential phase tracking error signal

The differential phase tracking error signal is the triangular signal derived from the phase difference between diagonal pairs of detector elements [phase(I_a+I_c) - phase(I_b+I_d)], when the light beam crosses the tracks. See figure 47 and 48. The tracking error signal is low pass filtered with a cut-off frequency of 30 kHz. See annex C.

Amplitude

The tracking error signal at the positive zero crossing shall satisfy the following specifications.

$0,5 \leq \overline{\Delta}\, t/T \leq 1,1$, at 0,10 µm radial offset.

$\overline{\Delta}\, t$ denotes the average time difference coming from the phase difference between diagonal pairs of detector elements and T denotes the Channel bit clock period.

Asymmetry

The value of asymmetry shall satisfy the following specifications.

$| (T_1 - T_2) / (T_1 + T_2) | = 0,2$ max.

21.3.2 Tangential push-pull signal

Tangential push-pull signal is derived from the instantaneous level of the differential output $[(I_a + I_d) - (I_b + I_c)]$, when the light beam is following a track. See figure 47.

The above parameters shall satisfy

$[(I_a + I_d) - (I_b + I_c)]pp / I_{14} = 1,2$ max.

--`,,```,,,,````-`-`,,`,,`,`,,`---
Copyright International Organization for Standardization
Provided by IHS under license with ISO
No reproduction or networking permitted without license from IHS
Not for Resale

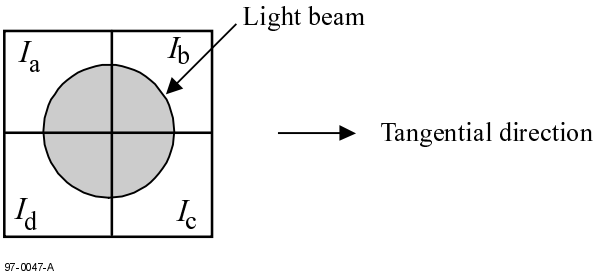

Figure 46 - Quadrant photo detector

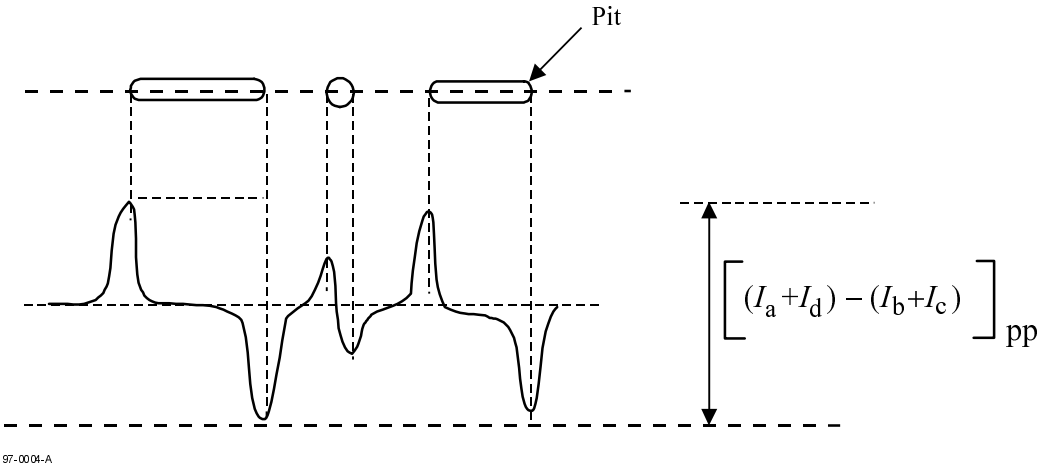

Figure 47 - Tangential push-pull signal

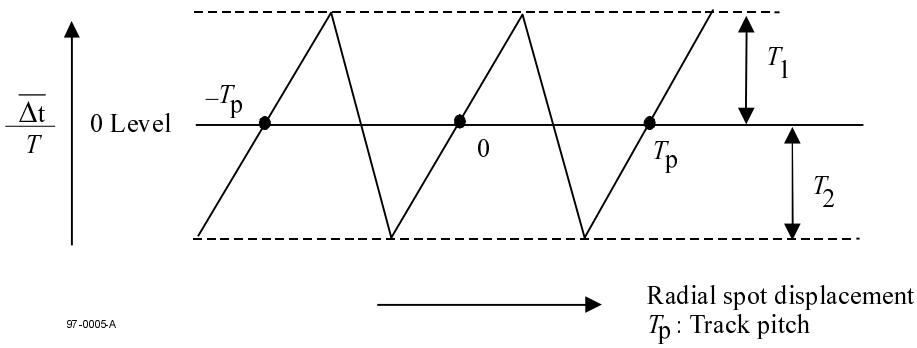

Figure 48 - Differential phase tracking error signal

Section 5 - Characteristics of the recording layer

22 Method of testing

Clause 23 describes a series of tests to assess the phase change recording properties of the Recording layer, as used for writing data. The tests shall be performed in the Recording field of the sectors in the Rewritable Area. The write and read operations necessary for the tests shall be made on the same Reference Drive.

22.1 Environment

All signals in clause 23 shall be within their specified ranges with the disk in the operating environment defined in 8.1.2.

22.2 Reference Drive

The overwrite and read tests described in clause 23 shall be measured in Read channel 1 of the Reference Drive. The drive shall have the following characteristics for the purpose of these tests.

Copyright International Organization for Standardization
Provided by IHS under license with ISO
No reproduction or networking permitted without license from IHS
Not for Resale

22.2.1 Optics and mechanics

The focused optical beam shall have the properties defined in 9.1. The disk shall rotate as specified in 9.3.

22.2.2 Read power

The Read power is the optical power incident on the entrance surface of the disk and used for reading the information. The Read power shall be given in Control Data Zone (see 16.2.6). The actual power shall be within 10 % of the given power.

22.2.3 Read channel

The Reference Drive shall have Read channel 1 which can detect marks and spaces in the Recording layer. The read signal from the Read channel 1 is not equalized except when measuring jitter. The threshold level for binarizing the read signal shall be adjusted to minimize the effects of mark and space size changes due to overwriting. Refer to annex F.

The drive shall have a Read channel 1, in which the total amount of light in the exit pupil of the objective lens is measured. See 9.4.

22.2.4 Tracking

During the measurement of the signals, the focus of the optical beam shall follow the tracks as specified in 18.2.5.

22.3 Write conditions

Marks and spaces are overwritten on the disk by pulses of Peak power, Bias Power 1 and Bias Power 2.

Marks are overwritten on the disk by irradiating write pulses which are modulated between Peak power and Bias Power 2.

Spaces are overwritten on the disk by irradiating Bias Power 1.

22.3.1 Write pulse

The Write pulse consists of light-pulse given in figure H.1 of annex H.

The Write pulse consists of a first pulse, a mutliple-pulse chain and a last pulse.

The Write pulse starts with the first pulse and ends with the last pulse followed by Bias Power 2 duration.

The first pulse starts at T_{SFP} later from a leading edge of a NRZI signal and ends at T_{EFP} later from a leading edge of a NRZI signal. T_{SFP} and T_{EFP} shall be given in the Control data Zone. See 16.2.6.

The multiple-pulse chain consists of repetitive pulses of duration T_{MP} and period T. It starts at T later from the leading edge time of the NRZI signal in the case of T_{EFP} less than T. The mutliple-pulse chain exists in the Write pulse corresponding to 4T to 14T of the NRZI signal in this case. It starts at 2T later from the leading edge time of the NRZI signal in the case of T_{EFP} larger than or equal to T. The mutliple-pulse chain exists in the Write pulse corresponding to 5T to 14T of the NRZI signal in this case. The last pulse of the mutliple-pulse chain starts at 3T before from the trailing edge time of the NRZI signal. T is the Channel clock duration and T_{MP} shall be given in the Control data Zone. See 16.2.6.

The last pulse starts at 2T - T_{SLP} before the trailing edge time of the NRZI signal and ends at 2T - T_{ELP} before the trailing edge time of the NRZI signal. T_{SLP} and T_{ELP} shall be given in the Control data Zone. See 16.2.6.

The Bias Power 2 duration following the last pulse ends at 2T - T_{LE} before the trailing edge time of the NRZI signal. T_{LE} shall be given in the Control data Zone. See 16.2.6.

T_{EFP} - T_{SFP}, T_{MP}, T_{ELP} - T_{SLP} and T_{LE} - T_{ELP} are the full width, half maximum duration. The full width, half maximum duration of each light-pulse is defined in figure H.2 of annex H. The rising time T_r and the falling time T_f shall each be less than 5 ns. The actual duration of each pulse shall be within 10 % of those selected.

22.3.2 Write power

The write power has three levels, the Peak power, the Bias Power 1 and Bias Power 2 which are the optical powers incident on the entrance surface of the disk and used for writing marks and spaces.

The Peak power and the Bias Power 1 shall be given in the Control data Zone (see 16.2.6) and the Bias Power 2 shall be less than or equal to Read power. All peak powers of the first pulse and the multiple-pulse chain are the same as the Peak power. The actual power shall be within 5 % of those selected.

22.4 Definition of signals

The signals in the Read channel are linearly related to the sum of the currents through the split photo-detector, and are therefore linearly related to the optical power falling on the detector.

Copyright International Organization for Standardization
Provided by IHS under license with ISO
No reproduction or networking permitted without license from IHS Not for Resale

23 Write characteristics

23.1 Modulated amplitude and Signal asymmetry

The Modulated amplitude and Signal asymmetry are measured in the Read channel 1. See figure 43 and annex F.

The test on phase depth and Signal asymmetry shall be carried out on each of a groove track and a land track of the Disk test Zone and the Drive test Zone.

- Overwrite random data in the Recording fields 10 times. The write condition shall be as specified in 22.3.
- Read the Recording fields under the conditions specified in 22.2.

The peak to peak value generated by the longest length 14T of mark and space in figure 43 is I_{14} and the peak value corresponding to the read signal is I_{14H}. The 0 level is no reflection level without a disk. The peak-to-peak value of the shortest length 3T of mark and space is I_3.

Above parameters shall satisfy

I_{14} / I_{14H} : 0,43 min.
I_3 / I_{14} : 0,40 min.

$(I_{14max} - I_{14min}) / I_{14max}$ = 0,10 max.

Where I_{14max} and I_{14min} are the maximum and the minimum values of I_{14} within a sector.

The maximum value of $(I_{14Hmax} - I_{14Hmin}) / I_{14Hmax}$ shall be :

Within a disk : 0,33 max.
Within a track : 0,15 max.

Where I_{14Hmax} and I_{14Hmin} are the maximum and minimum values of I_{14H} and I_{ot} within a disk or a track.

The value of asymmetry shall satisfy

$-0,05 \leq [(I_{14H} + I_{14L}) - (I_{3H} + I_{3L})] / 2 (I_{14H} - I_{14L}) \leq 0,15$

23.2 Jitter

The test on jitter shall be carried out in the Recording fields of any group of five adjacent tracks, designated (*m*-2), (*m*-1), *m*, (*m*+1), (*m*+2). When track *m* is a groove, tracks of (*m*-2), (*m*+2) are grooves and tracks of (*m*-1), (*m*+1) are lands. On the other hand, when track m is a land, tracks of (*m*-2), (*m*+2) are lands and tracks of (*m*-1), (*m*+1) are grooves.

The Jitter shall be measured for each of the groove and land tracks according to the following procedure.

- Overwrite random data in the Recording fields of all five tracks 10 times each. The write condition shall be specified in 22.3.
- Read the data from PS field, Data field and PA 3 field, at least, of track m under the conditions specified in 22.2.

The jitter is the standard deviation σ of the time variation of digitized data passed through the Read channel 1 specified in 18.2.3 The jitter of the leading and trailing edge is measured relative to the PLL clock and normalized by the Channel bit clock period.

The jitter shall not exceed 8,5 % of the Channel bit clock period.

Section 6 - Characteristics of user data

24 Method of testing

The user-written data may have been written by any drive in any environment. The read tests shall be performed on the Reference Drive.

All signals shall be within their specified ranges in the operating environment defined in 8.1.2. It is recommended that, before testing, the entrance surface of the disk shall be cleaned according to the instructions of the manufacturer of the disk.

Copyright International Organization for Standardization
Provided by IHS under license with ISO
No reproduction or networking permitted without license from IHS Not for Resale

Annex A

(normative)

Measurement of the angular deviation α

The angular deviation is the angle α formed by an incident beam perpendicular to the Reference Plane P with the reflected beam (figure A.1).

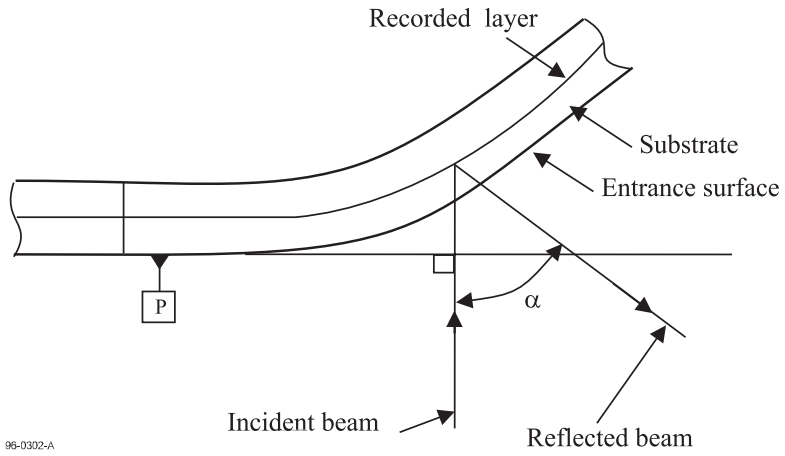

Figure A.1 - Angular deviation α

For measuring the angular deviation α, the disk shall be clamped between two concentric rings covering most of the Clamping Zone. The top clamping area shall have the same diameters as the bottom clamping area.

$d_{in} = 22{,}3\ ^{+0{,}5\ mm}_{-0{,}0\ mm}$

$d_{out} = 32{,}7\ ^{+0{,}0\ mm}_{-0{,}5\ mm}$

The total clamping force shall be F_1 = 2,0 N ± 0,5 N. In order to prevent warping of the disk under the moment of force generated by the clamping force and the chucking force F_2 exerted on the rim of the centre hole of the disk, F_2 shall not exceed 0,5 N (figure A.2). This measurement shall be made under the conditions of 8.1.1.a).

--`,,```,,,,````-`-`,,`,,`,`,,`---
Copyright International Organization for Standardization
Provided by IHS under license with ISO
No reproduction or networking permitted without license from IHS
Not for Resale

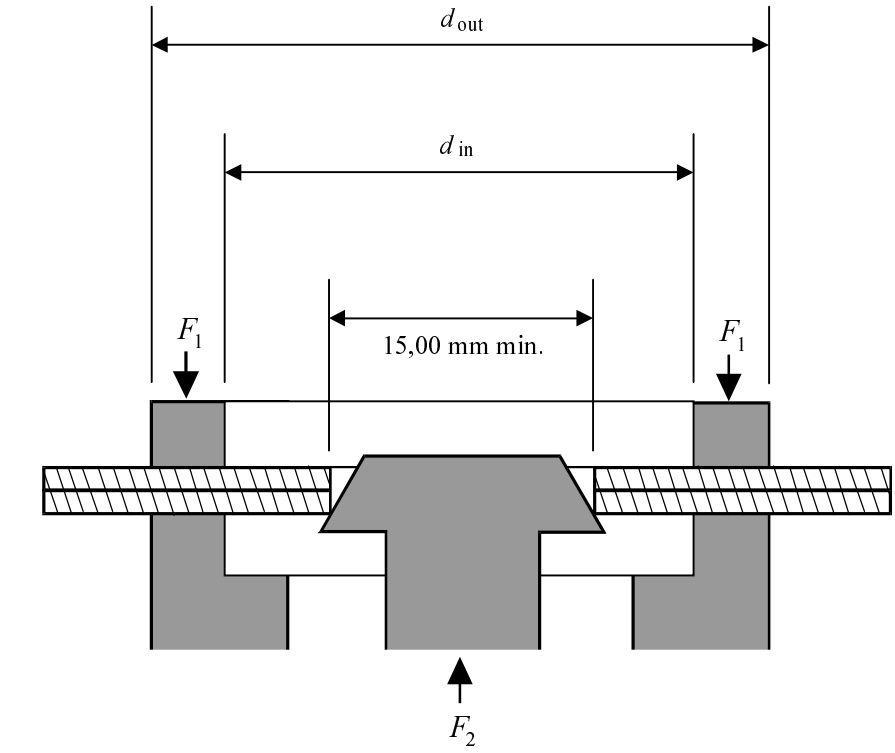

Figure A.2 - Clamping and chucking conditions

--`,,```,,,,````-`-`,,`,,`,`,,`---

Copyright International Organization for Standardization
Provided by IHS under license with ISO
No reproduction or networking permitted without license from IHS
Not for Resale

Annex B

(normative)

Measurement of birefringence

B.1 Principle of the measurement

In order to measure the birefringence, circularly polarized light in a parallel beam is used. The phase retardation is measured by observing the ellipticity of the reflected light.

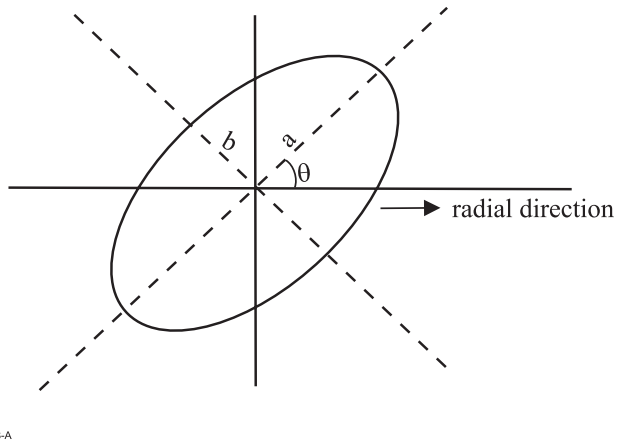

Figure B.1 - Ellipse with ellipticity $e = b/a$ and orientation θ

The orientation θ of the ellipse is determined by the orientation of the optical axis

$$\theta = \gamma - \pi/4 \qquad \text{(I)}$$

where γ is the angle between the optical axis and the radial direction.

The ellipticity $e = b/a$ is a function of the phase retardation δ

$$e = \tan\left[\frac{1}{2}\left(\frac{\pi}{2} - \delta\right)\right] \qquad \text{(II)}$$

When the phase retardation δ is known the birefringence BR can be expressed as a fraction of the wavelength

$$BR = \frac{\lambda}{2\pi}\delta \quad \text{nm} \qquad \text{(III)}$$

Thus, by observing the elliptically polarized light reflected from the disk, the birefringence can be measured and the orientation of the optical axis can be assessed as well.

B.2 Measurements conditions

The measurement of the birefringence specified above shall be made under the following conditions.

Mode of measurement in reflection, double pass through the substrate

Wavelength λ of the laser light	645 nm ± 15 nm
Beam diameter (FWHM)	1,0 mm ± 0,2 mm
Angle β of incidence in radial direction relative to the radial plane perpendicular to Reference Plane P	7,0° ± 0,2°

Copyright International Organization for Standardization
Provided by IHS under license with ISO
No reproduction or networking permitted without license from IHS Not for Resale

Clamping and chucking conditions	as specified by annex A
Disk mounting	horizontally
Rotation	less than 1 Hz
Temperature and relative humidity	as specified in 8.1.1.a)

B.3 Example of a measuring set-up

Whilst this International Standard does not prescribe a specific device for measuring birefringence, the device shown schematically in figure B.2 as an example, is well suited for this measurement.

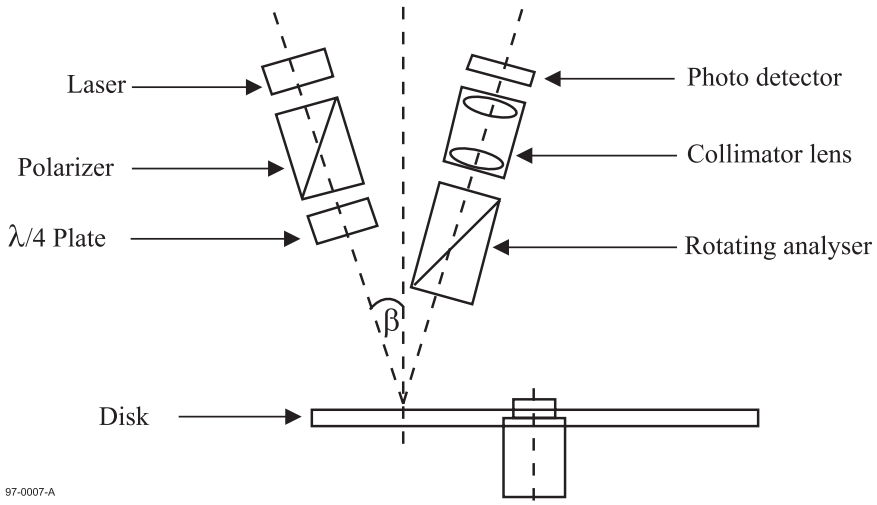

Figure B.2 - Example of a device for the measurement of birefringence

Light from a laser source, collimated into a polarizer (extinction ratio ≈ 10^{-5}), is made circular by a $\lambda/4$ plate. The ellipticity of the reflected light is analyzed by a rotating analyzer and a photo detector. For every location on the disk, the minimum and the maximum values of the intensity are measured. The ellipticity can then be calculated as

$$e^2 = I_{min} / I_{max} \qquad \text{(IV)}$$

Combining equations II, III and IV yields

$$BR = \lambda/4 - \lambda / \pi \times \arctan \sqrt{\frac{I_{min}}{I_{max}}}$$

This device can be easily calibrated as follows

- I_{min} is set to 0 by measuring a polarizer or a $\lambda/4$ plate,
- $I_{min} = I_{max}$ when measuring a mirror

Apart of the d.c. contribution of the front surface reflection, a.c. components may occur, due to the interference of the reflection(s) of the front surface with the reflection(s) from the recorded layer. These a.c. reflectance effects are significant only if the disk substrate has an extremely accurate flatness and if the light source has a high coherence.

Copyright International Organization for Standardization
Provided by IHS under license with ISO
No reproduction or networking permitted without license from IHS
Not for Resale

Annex C

(normative)

Measurement of the differential phase tracking error

C.1 Measuring method for the differential phase tracking error

The reference circuit for the measurement of the tracking error shall be that shown in figure C.1. Each output of the diagonal pairs of elements of the quadrant photo detector shall be digitized independently after equalization of the wave form defined by

$H(s) = (1 + 1{,}6 \times 10^{-7}\ i\omega) / (1 + 4{,}7 \times 10^{-8}\ i\omega)$

The gain of the comparators shall be sufficient to reach full saturation on the outputs, even with minimum signal amplitudes. Phases of the digitized pulse signal edges (signals B1 and B2) shall be compared to each other to produce a time-lead signal C1 and a time-lag signal C2. The phase comparator shall react to each individual edge with signal C1 or C2, depending on the sign of Δt_i. A tracking error signal shall be produced by smoothing the C1, C2 signals with low-pass filters and by subtracting by means of a unity gain differential amplifier. The low-pass filters shall be 1st order filters with a cut-off frequency of (-3 dB) 30 kHz.

Special attention shall be given to the implementation of the circuit because very small time differences have to be measured, indeed 1 % of T equals only 0,38 ns. Careful averaging is needed.

The average time difference between two signals from the diagonal pairs of elements of the quadrant detector shall be

$\overline{\Delta t} = 1/N \sum \Delta t_i$

where N is the number of edges both rising and falling.

C.2 Measurement of $\overline{\Delta t}/T$ without time interval analyzer

The relative time difference $\overline{\Delta t}/T$ is represented by the amplitude of the tracking error signal provided that the amplitudes of the C1 and C2 signals and the frequency component of the read-out signals are normalized. The relation between the tracking error amplitude $\overline{\Delta TVE}$ and the time difference is given by

$$\overline{\Delta TVE} = \frac{\sum \Delta t_i}{\sum T_i} \mathrm{Vpc} = \frac{\sum \Delta t_i}{N\ n\ T} \mathrm{Vpc} = \frac{\overline{\Delta t}}{T} \times \frac{\mathrm{Vpc}}{n}$$

where

Vpc is the amplitude of the C1 and C2 signals

T_i is the actual length of the read-out signal in the range 3T to 14T

*n*T is the weighted average value of the actual length

N n T is the total averaging time

Assuming that Vpc equals 5 V and that the measured value of *n* equals 5, then the above relation between the tracking error amplitude $\overline{\Delta TVE}$ and the time difference $\overline{\Delta t}$ can be simplified to

$\overline{\Delta TVE} = \overline{\Delta t} / T$

Copyright International Organization for Standardization
Provided by IHS under license with ISO
No reproduction or networking permitted without license from IHS Not for Resale

C.3 Calibration of $\overline{\Delta t}$/T

As the gain of the phase comparator tends to vary, special attention shall be given to the calibration of the gain of the phase comparator. The following check and calibration method shall be applied for the measurement of the DPD tracking error signal.

a) Checking the measurement circuit

a.1) Measure the relation between the amplitude of the first comparator input (3T) and the amplitude of the tracking error signal.

a.2) Check the current gain of the amplifier, using the saturation area (see figure C.2).

b) Determination of the calibration factor K

b.1) Generate two sinusoidal signals A1 and A2 of frequency 2,616 MHz (corresponding to 5T) with phase difference, and feed them into two equalizer circuits.

b.2) Measure the relation between $\overline{\Delta t}$/T and $\overline{\Delta TVE}$ / Vpc.

($\overline{\Delta TVE}$ / Vpc) K = ($\overline{\Delta t}$ / T) / *n*

K = (0,2 $\overline{\Delta t}$ /T) / ($\overline{\Delta TVE}$ / Vpc)

for *n* = 5

The relation between $\overline{\Delta t}$ /T and $\overline{\Delta TVE}$ / Vpc is linear (see figure C.3)

c) Compare the measured $\overline{\Delta t}$ /T with the calculated one

c.1) Measure $\overline{\Delta t}$ /T using the method of M.1.

c.2) Calculate $\overline{\Delta t}$ /T(real) as follows

$\overline{\Delta t}$ /T (real) = K × $\overline{\Delta t}$ /T (measured)

Copyright International Organization for Standardization
Provided by IHS under license with ISO
No reproduction or networking permitted without license from IHS Not for Resale

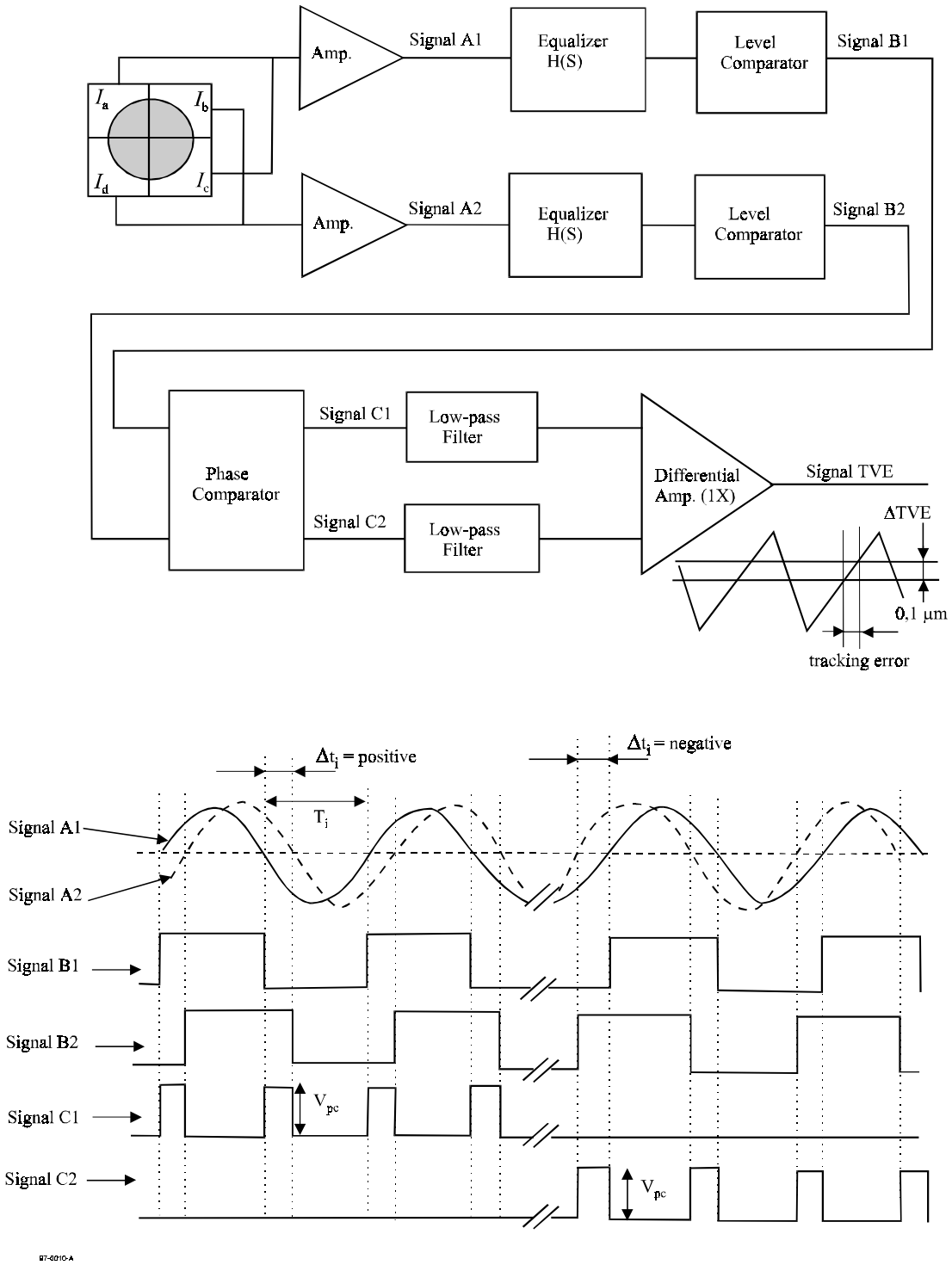

Figure C.1 - Circuit for tracking error measurements

Copyright International Organization for Standardization
Provided by IHS under license with ISO
No reproduction or networking permitted without license from IHS
Not for Resale

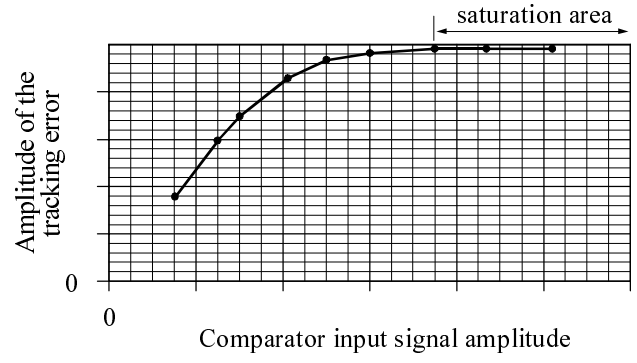

Figure C.2 - Comparator input signal amplitude vs tracking error signal amplitude

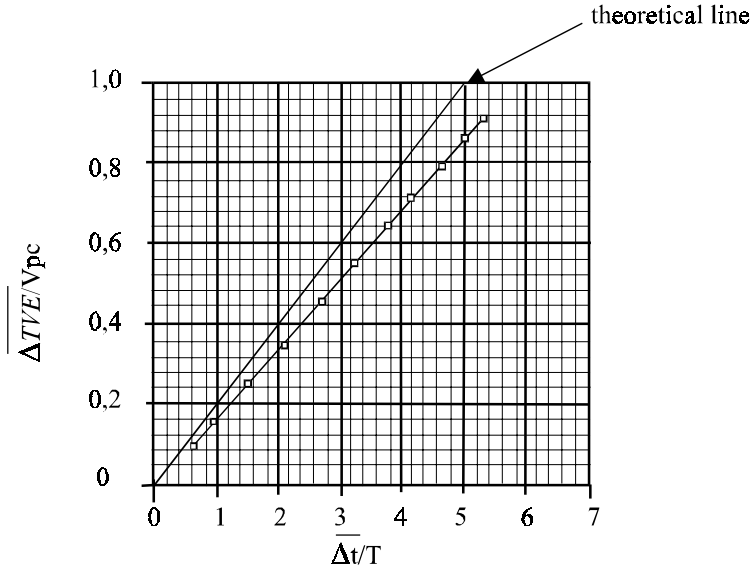

Figure C.3 - $\overline{\Delta t}$ /T vs $\overline{\Delta TVE}$ / Vpc

Copyright International Organization for Standardization
Provided by IHS under license with ISO
No reproduction or networking permitted without license from IHS
Not for Resale

Annex D

(normative)

Reflectivity calibration and measuring method

D.1 Calibration method

A good reference disk shall be chosen, for instance a 0,6 mm glass disk with a golden reflective mirror. This reference disk shall be measured by a parallel beam as shown in figure D.1

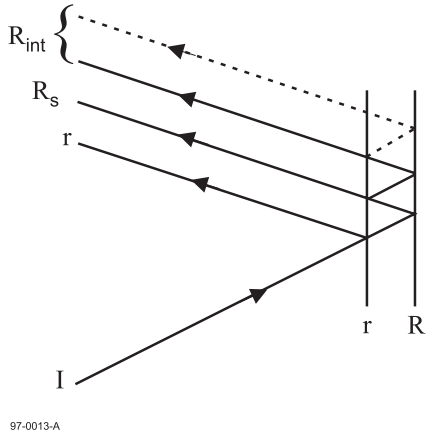

Figure D.1 - Reflectance calibration

In this figure the following applies.

I = incident beam

r = reflectivity of the entrance surface

R_S = main reflectivityof the recorded layer

R_{int} = other reflectivities of the entrance surface and of the recorded layer

$R_{//}$ = measured value, using the arrangement of figure D.1

$R_{//} = r + R_S + R_{int}$

$r = ((n-1) / (n+1))^2$ where n is the refraction index of the substrate

$R_S = R_{//} - r - R_{int}$

$R_S = [(1-r)^2 \times (R_{//} - r)] / [1-r \times (2 - R_{//})]$

The reference disk shall be measured on a reference drive. I_{mirror} obtained from the golden reflective mirror, and measured by the focused beam is equated to R_S as determined above.

Now the arrangement is calibrated and the focused reflectivity is a linear function of the reflectivity of the recorded layer, independently from the reflectivity of the entrance surface.

Copyright International Organization for Standardization
Provided by IHS under license with ISO
No reproduction or networking permitted without license from IHS Not for Resale

D.2 Measuring method

a. Reflectivity in Rewritable Area

A method of measuring the reflectivity with an Optical Head.

(1) Measure the reflective light power D_s from the reference disk with calibrated reflectivity Rs.

(2) Measure the reflective light power D_m from Mirror field.

(3) Calculate the disk reflectivity R_d in the Rewritable Area as follows :

$$R_d = \frac{R_s}{D_s} \times D_m$$

b. Reflectivity in Embossed Area

A method of measuring the reflectivity by a Optical Head.

(1) Measure the reflective light power Ds from the reference disk with calibrated reflectivity R_s.

(2) Measure the reflective light power I_{14H} from Embossed Area (see figure 42).

(3) Calculate the disk reflectivity R_{14H} in the Embossed Area as follows :

$$R_{14H} = \frac{R_s}{D_s} \times I_{14H}$$

Copyright International Organization for Standardization
Provided by IHS under license with ISO
No reproduction or networking permitted without license from IHS
Not for Resale

Annex E

(normative)

Tapered cone for disk clamping

The device used for centring the disk for measurement shall be a cone with a taper angle $\beta = 40{,}0° \pm 0{,}5°$ (see figure E.1).

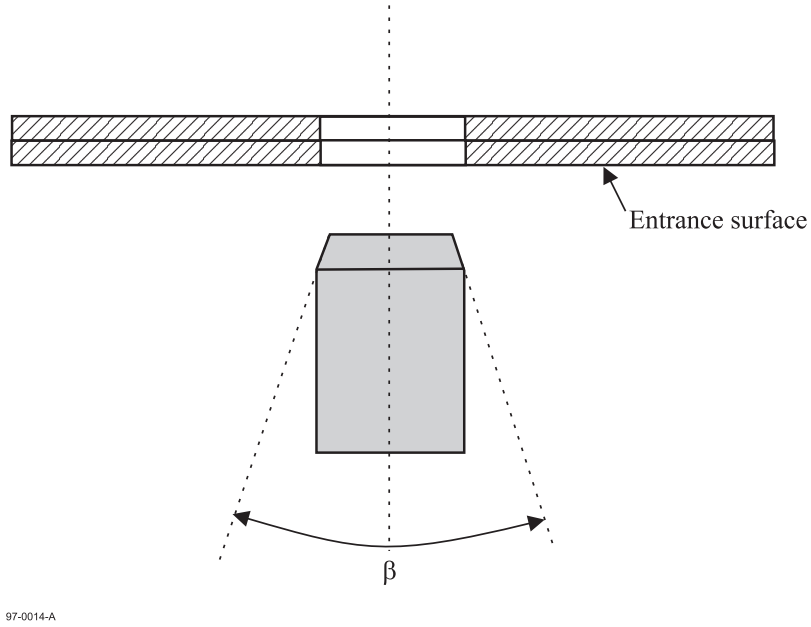

Figure E.1 - Tapered cone

Copyright International Organization for Standardization
Provided by IHS under license with ISO
No reproduction or networking permitted without license from IHS
Not for Resale

Annex F

(normative)

Measuring conditions for the operation signals

1) PLL

Natural Frequency at 4T : $\omega_n = 0{,}3 \times 10^6$ rad/s
Damping Ratio at 4T : $\xi = 0{,}7$

2) Slicer

The slicer shall be a feed-back auto-slicer with a -3 dB closed-loop bandwidth of 10 kHz, 1st order integrating.

3) The jitter in a quarter revolution of the disk shall be measured.

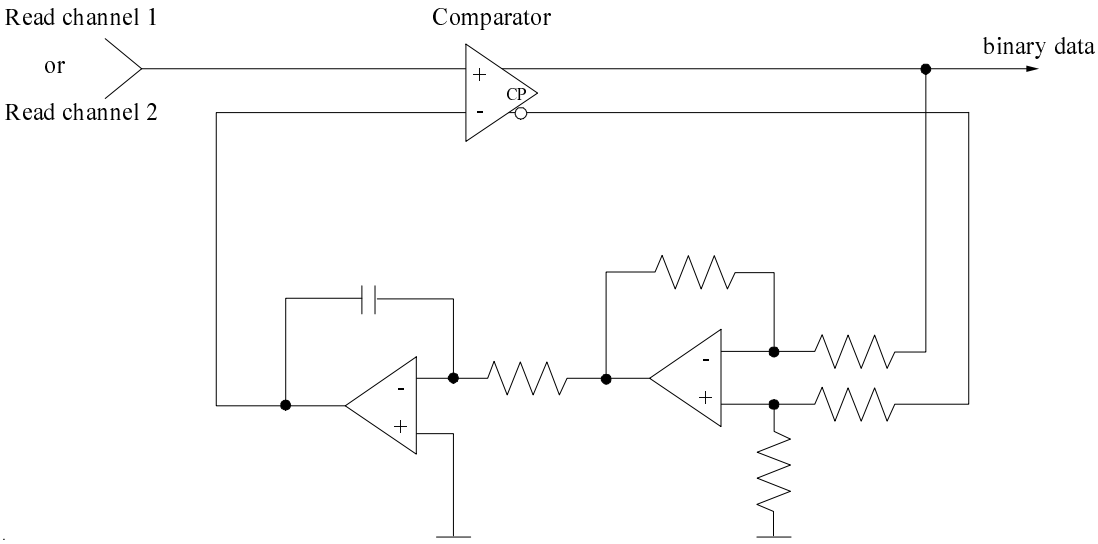

Figure F.1 - An example of circuit diagram of slicer

The bandwidth of the pre-amplifier of the photo detector shall be greater than 20 MHz in order to prevent group-delay distortion.

Low-pass filter : 6th order Bessel filter, f_c (-3 dB) = 10,0 MHz

Example of an analogue equalizer : 3-tap transversal filter with transfer function

$H(z) = 1{,}30\, z^{-2} - 0{,}15\,(1 + z^{-4})$

Filtering and equalization :

- Gain variation : 1 dB max. (below 8 MHz)
- Group delay variation : 3 ns max. (below 7 MHz)
- (Gain at 6 MHz - Gain at 0 Hz) = 2,8 dB ± 0,3 dB
- a.c. coupling (high-pass filter) = 1st order, f_C (-3dB) = 1 kHz

Copyright International Organization for Standardization
Provided by IHS under license with ISO
No reproduction or networking permitted without license from IHS
Not for Resale

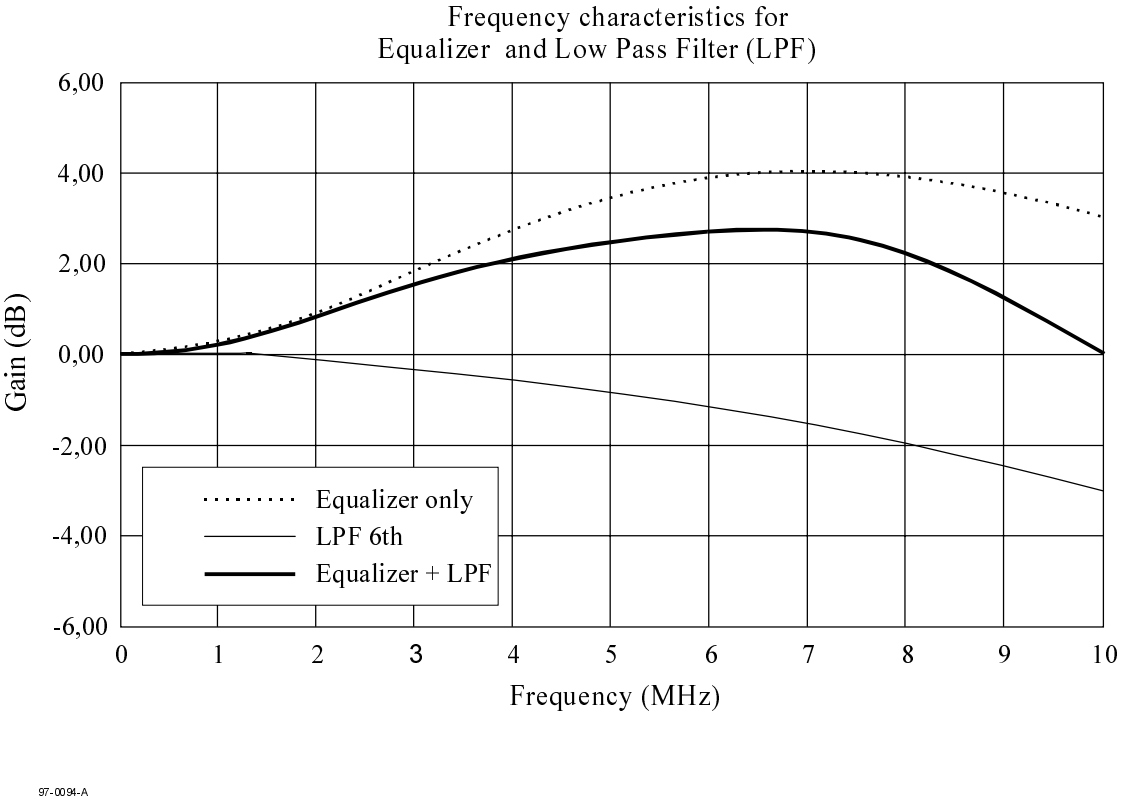

Figure F.2 - Frequency characteristics for the equalizer and the low-pass filter

Copyright International Organization for Standardization
Provided by IHS under license with ISO
No reproduction or networking permitted without license from IHS
Not for Resale

Annex G

(normative)

8-to-16 Recording code with RLL (2,10) requirements

Tables G.1 and G.2 list the 16-bit Code Words into which the 8-bit coded Data bytes have to be transformed. Figure G.1 shows schematically how the Code Words and the associated State specification are generated.

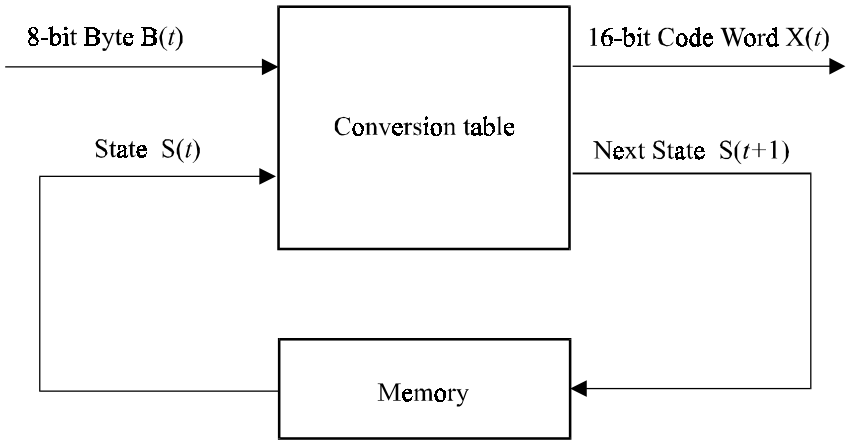

Figure G.1 - Code Words generation

In this figure :

$X(t) = H\{B(t), S(t)\}$ $X_{15}(t)$ = msb and $X_0(t)$ = lsb
$S(t+1) = G\{B(t), S(t)\}$
H is the output function
G is the next-state function

The Code Words leaving the States shall be chosen so that the concatenation of Code Words entering a State and those leaving that State satisfy the requirement that between two ONEs there shall be at least 2 and at most 10 ZEROs.

As additional requirements :

– Code Words leaving State 2 shall have both bit X_{15} and bit X_3 set to ZERO, and

– in Code Words leaving State 3 bit X_{15} or bit X_3 or both shall be set to ONE.

This means that the Code Word sets of States 2 and 3 are disjoint.

Copyright International Organization for Standardization
Provided by IHS under license with ISO
No reproduction or networking permitted without license from IHS Not for Resale

Code Word X(t)	Next State S(t+1)	Code Word X(t+1)
Ends with 1 or no trailing ZERO	State 1	Starts with 2 or up to 9 leading ZEROs
Ends with 2 or up to 5 trailing ZEROs	State 2	Starts with 1 or up to 5 leading ZEROs, and $X_{15}(t+1),X_3(t+1) = 0,0$
Ends with 2 or up to 5 trailing ZEROs	State 3	Starts with none or up to 5 leading ZEROs, and $X_{15}(t+1),X_3(t+1) \neq 0,0$
Ends with 6 or up to 9 trailing ZEROs	State 4	Starts with 1 or no leading ZERO

Figure G.2 - Determination of States

Note that when decoding the recorded data, knowledge about the encoder is required to be able to reconstitute the original main Data.

$$B(t) = H^{-1} \{X(t), S(t)\}$$

Because of the involved error propagation, such state-dependent decoding is to be avoided. In the case of this 8-to-16 recording code, the conversion tables have been chosen in such a way that knowledge about the State is not required in most cases. As can be gathered from the tables, in some cases, two 8-bit bytes, for instance the 8-bit bytes 5 and 6 in States 1 and 2 in table F.1, generate the same 16-bit Code Words. The construction of the tables allows to solve this apparent ambiguity. Indeed, if two identical Code Words leave a State, one of them goes to State 2 and the other to State 3. Because the setting of bits X_{15} and X_3 is always different in these two States, any Code Word can be uniquely decoded by analysing the Code Word itself together with bits X_{15} and X_3 of the next Code Word :

$$B(t) = H^{-1} \{ X(t), X_{15}(t+1), X_3(t+1) \}$$

In the tables, the 8-bit bytes are identified by their decimal value.

Copyright International Organization for Standardization
Provided by IHS under license with ISO
No reproduction or networking permitted without license from IHS Not for Resale

Table G.1 - Main Conversion Table

8-bit byte	State 1		State 2		State 3		State 4	
	Code Word msb lsb	Next State	Code Word msb lsb	Next State	Code Word msb lsb	Next State	Code Word msb lsb	Next State
0	0010000000001001	1	0100000100100000	2	0010000000001001	1	0100000100100000	2
1	0010000000010010	1	0010000000010010	1	1000000100100000	3	1000000100100000	3
2	0010000100100000	2	0010000100100000	2	1000000000010010	1	1000000000010010	1
3	0010000001001000	2	0100010010000000	4	0010000001001000	2	0100010010000000	4
4	0010000010010000	2	0010000010010000	2	1000000100100000	2	1000000100100000	2
5	0010000000100100	2	0010000000100100	2	1001001000000000	4	1001001000000000	4
6	0010000000100100	3	0010000000100100	3	1000100100000000	4	1000100100000000	4
7	0010000001001000	3	0100000000010010	1	0010000001001000	3	0100000000010010	1
8	0010000010010000	3	0010000010010000	3	1000010010000000	4	1000010010000000	4
9	0010000100100000	3	0010000100100000	3	1001001000000001	1	1001001000000001	1
10	0010010010000000	4	0010010010000000	4	1000100100000001	1	1000100100000001	1
11	0010001001000000	4	0010001001000000	4	1000000010010000	3	1000000010010000	3
12	0010010010000001	1	0010010010000001	1	1000000010010000	2	1000000010010000	2
13	0010001001000001	1	0010001001000001	1	1000010010000001	1	1000010010000001	1
14	0010000001001001	1	0100000000100100	3	0010000001001001	1	0100000000100100	3
15	0010000100100001	1	0010000100100001	1	1000001001000001	1	1000001001000001	1
16	0010000010010001	1	0010000010010001	1	1000000100100001	1	1000000100100001	1
17	0010000000100010	1	0010000000100010	1	1000001001000000	4	1000001001000000	4
18	0001000000001001	1	0100000010010000	2	0001000000001001	1	0100000010010000	2
19	0010000000010001	1	0010000000010001	1	1001000100000000	4	1001000100000000	4
20	0001000000010010	1	0001000000010010	1	1000100010000000	4	1000100010000000	4
21	0000100000000010	1	0000100000000010	1	1000000010010001	1	1000000010010001	1
22	0000010000000001	1	0000010000000001	1	1000000001001001	1	1000000001001001	1
23	0010001000100000	2	0010001000100000	2	1000000001001000	2	1000000001001000	2
24	0010000100010000	2	0010000100010000	2	1000000001001000	3	1000000001001000	3
25	0010000010001000	2	0100000000100100	2	0010000010001000	2	0100000000100100	2
26	0010000001000100	2	0010000001000100	2	1000000000100010	1	1000000000100010	1
27	0001000100100000	2	0001000100100000	2	1000000000010001	1	1000000000010001	1
28	0010000000001000	2	0100000010010000	3	0010000000001000	2	0100000010010000	3
29	0001000010010000	2	0001000010010000	2	1001001000000010	1	1001001000000010	1
30	0001000001001000	2	0100000100100000	3	0001000001001000	2	0100000100100000	3
31	0001000000100100	2	0001000000100100	2	1001000100000001	1	1001000100000001	1
32	0001000000000100	2	0001000000000100	2	1000100100000010	1	1000100100000010	1
33	0001000000000100	3	0001000000000100	3	1000100010000001	1	1000100010000001	1
34	0001000000100100	3	0001000000100100	3	1000000000100100	2	1000000000100100	2
35	0001000001001000	3	0100001001000000	4	0001000001001000	3	0100001001000000	4
36	0001000010010000	3	0001000010010000	3	1000000000100100	3	1000000000100100	3
37	0001000100100000	3	0001000100100000	3	1000010001000000	4	1000010001000000	4
38	0010000000001000	3	0100100100000001	1	0010000000001000	3	0100100100000001	1
39	0010000001000100	3	0010000001000100	3	1001000010000000	4	1001000010000000	4
40	0010000010001000	3	0100010010000001	1	0010000010001000	3	0100010010000001	1
41	0010000100010000	3	0010000100010000	3	1000010010000010	1	1000010010000010	1
42	0010001000100000	3	0010001000100000	3	1000001000100000	2	1000001000100000	2
43	0010010001000000	4	0010010001000000	4	1000010001000001	1	1000010001000001	1
44	0001001001000000	4	0001001001000000	4	1000001000100000	3	1000001000100000	3
45	0000001000000001	1	0100010001000000	4	1000001001000010	1	0100010001000000	4

--`,,```,,,,````-`-`,,`,,`,`,,`---

Copyright International Organization for Standardization
Provided by IHS under license with ISO
No reproduction or networking permitted without license from IHS
Not for Resale

Table G.1 - Main Conversion Table (continued)

8-bit byte	State 1		State 2		State 3		State 4	
	Code Word msb lsb	Next State	Code Word msb lsb	Next State	Code Word msb lsb	Next State	Code Word msb lsb	Next State
46	0010010010000010	1	0010010010000010	1	1000001000100001	1	1000001000100001	1
47	0010000010001001	1	0100001001000001	1	0010000010001001	1	0100001001000001	1
48	0010010001000001	1	0010010001000001	1	1000000100010000	2	1000000100010000	2
49	0010001001000010	1	0010001001000010	1	1000000010001000	2	1000000010001000	2
50	0010001000100001	1	0010001000100001	1	1000000100010000	3	1000000100010000	3
51	0001000001001001	1	0100000100100001	1	0001000001001001	1	0100000100100001	1
52	0010000100100010	1	0010000100100010	1	1000000100100010	1	1000000100100010	1
53	0010000100010001	1	0010000100010001	1	1000000100010001	1	1000000100010001	1
54	0010000010010010	1	0010000010010010	1	1000000010010010	1	1000000010010010	1
55	0010000001000010	1	0010000001000010	1	1000000010001001	1	1000000010001001	1
56	0010000000100001	1	0010000000100001	1	1000000001000010	1	1000000001000010	1
57	0000100000001001	1	0100000010010001	1	0000100000001001	1	0100000010010001	1
58	0001001001000001	1	0001001001000001	1	1000000000100001	1	1000000000100001	1
59	0001000100100001	1	0001000100100001	1	0100000001001001	1	0100000001001001	1
60	0001000010010001	1	0001000010010001	1	1001001000010010	1	1001001000010010	1
61	0001000000100010	1	0001000000100010	1	1001001000001001	1	1001001000001001	1
62	0001000000010001	1	0001000000010001	1	1001000100000010	1	1001000100000010	1
63	0000100000010010	1	0000100000010010	1	1000000001000100	2	1000000001000100	2
64	0000010000000010	1	0000010000000010	1	0100000001001000	2	0100000001001000	2
65	0010010000100000	2	0010010000100000	2	1000010000100000	2	1000010000100000	2
66	0010001000010000	2	0010001000010000	2	1000001000010000	2	1000001000010000	2
67	0010000100001000	2	0100000000100010	1	0010000100001000	2	0100000000100010	1
68	0010000010000100	2	0010000010000100	2	1000000100001000	2	1000000100001000	2
69	0010000000010000	2	0010000000010000	2	1000000010000100	2	1000000010000100	2
70	0001000010001000	2	0100001000100000	2	0001000010001000	2	0100001000100000	2
71	0001001000100000	2	0001001000100000	2	0100000010001000	2	0100000010001000	2
72	0001000000001000	2	0100000100010000	2	0001000000001000	2	0100000100010000	2
73	0001000100010000	2	0001000100010000	2	1000000001000100	3	1000000001000100	3
74	0001000001000100	2	0001000001000100	2	0100000001001000	3	0100000001001000	3
75	0000100100100000	2	0000100100100000	2	1000010000100000	3	1000010000100000	3
76	0000100010010000	2	0000100010010000	2	1000001000010000	3	1000001000010000	3
77	0000100001001000	2	0100000001000100	2	0000100001001000	2	0100000001000100	2
78	0000100000100100	2	0000100000100100	2	1000000100001000	3	1000000100001000	3
79	0000100000000100	2	0000100000000100	2	1000000010000100	3	1000000010000100	3
80	0000100000000100	3	0000100000000100	3	0100000010001000	3	0100000010001000	3
81	0000100000100100	3	0000100000100100	3	1000100001000000	4	1000100001000000	4
82	0000100001001000	3	0100000001000100	3	0000100001001000	3	0100000001000100	3
83	0000100010010000	3	0000100010010000	3	1000000010001000	3	1000000010001000	3
84	0000100100100000	3	0000100100100000	3	1001001001001000	2	1001001001001000	2
85	0001000000001000	3	0100000100010000	3	0001000000001000	3	0100000100010000	3
86	0001000001000100	3	0001000001000100	3	1001001000100100	2	1001001000100100	2
87	0001000010001000	3	0100001000100000	3	0001000010001000	3	0100001000100000	3
88	0001000100010000	3	0001000100010000	3	1001001001001000	3	1001001001001000	3
89	0001001000100000	3	0001001000100000	3	1001000010000001	1	1001000010000001	1
90	0010000000010000	3	0010000000010000	3	1000100100010010	1	1000100100010010	1
91	0010000010000100	3	0010000010000100	3	1000100100001001	1	1000100100001001	1
92	0010000100001000	3	0100000000010001	1	0010000100001000	3	0100000000010001	1
93	0010001000010000	3	0010001000010000	3	1000100010000010	1	1000100010000010	1
94	0010010000100000	3	0010010000100000	3	1000100001000001	1	1000100001000001	1

Copyright International Organization for Standardization
Provided by IHS under license with ISO
No reproduction or networking permitted without license from IHS
Not for Resale

Table G.1 - Main Conversion Table (continued)

8-bit byte	State 1		State 2		State 3		State 4	
	Code Word msb lsb	Next State	Code Word msb lsb	Next State	Code Word msb lsb	Next State	Code Word msb lsb	Next State
95	0000001000000010	1	0100100100000010	1	1000010010010010	1	0100100100000010	1
96	0000000100000001	1	0100100010000001	1	1000010010001001	1	0100100010000001	1
97	0010010010001001	1	0100010000100000	2	0010010010001001	1	0100010000100000	2
98	0010010010010010	1	0010010010010010	1	1001001000000100	2	1001001000000100	2
99	0010010001000010	1	0010010001000010	1	1001001000100100	3	1001001000100100	3
100	0010010000100001	1	0010010000100001	1	1000010001000010	1	1000010001000010	1
101	0010001001001001	1	0100010010000010	1	0010001001001001	1	0100010010000010	1
102	0010001000100010	1	0010001000100010	1	1000010000100001	1	1000010000100001	1
103	0010001000010001	1	0010001000010001	1	1000001001001001	1	1000001001001001	1
104	0010000100010010	1	0010000100010010	1	1000001000100010	1	1000001000100010	1
105	0010000010000010	1	0010000010000010	1	1000001000010001	1	1000001000010001	1
106	0010000100001001	1	0100001000010000	2	0010000100001001	1	0100001000010000	2
107	0010000001000001	1	0010000001000001	1	1000000100010010	1	1000000100010010	1
108	0001001001000010	1	0001001001000010	1	1000000100001001	1	1000000100001001	1
109	0001001000100001	1	0001001000100001	1	1000000010000010	1	1000000010000010	1
110	0001000100100010	1	0001000100100010	1	1000000001000001	1	1000000001000001	1
111	0001000100010001	1	0001000100010001	1	0100000010001001	1	0100000010001001	1
112	0001000010010010	1	0001000010010010	1	1001001001001001	1	1001001001001001	1
113	0001000001000010	1	0001000001000010	1	1001001000100010	1	1001001000100010	1
114	0001000010001001	1	0100010000100000	3	0001000010001001	1	0100010000100000	3
115	0001000000100001	1	0001000000100001	1	1001001000010001	1	1001001000010001	1
116	0000100100100001	1	0000100100100001	1	1001000100010010	1	1001000100010010	1
117	0000100010010001	1	0000100010010001	1	1001000100001001	1	1001000100001001	1
118	0000100001001001	1	0100010001000001	1	0000100001001001	1	0100010001000001	1
119	0000100000100010	1	0000100000100010	1	1000100100100100	2	1000100100100100	2
120	0000100000010001	1	0000100000010001	1	1000100100000100	2	1000100100000100	2
121	0000010000001001	1	0100001001000010	1	0000010000001001	1	0100001001000010	1
122	0000010000010010	1	0000010000010010	1	1000100000100000	2	1000100000100000	2
123	0010010010000100	2	0010010010000100	2	1000010010000100	2	1000010010000100	2
124	0010010000010000	2	0010010000010000	2	1000010000010000	2	1000010000010000	2
125	0010001000001000	2	0100001000100001	1	0010001000001000	2	0100001000100001	1
126	0010001001000100	2	0010001001000100	2	1000001001000100	2	1000001001000100	2
127	0001000100001000	2	0100000100100010	1	0001000100001000	2	0100000100100010	1
128	0010000100100100	2	0010000100100100	2	1000001000001000	2	1000001000001000	2
129	0000100010001000	2	0100000100010001	1	0000100010001000	2	0100000100010001	1
130	0010000100000100	2	0010000100000100	2	1000000100100100	2	1000000100100100	2
131	0010000000100000	2	0010000000100000	2	1001001000000100	3	1001001000000100	3
132	0001001000010000	2	0001001000010000	2	1000100100100100	3	1000100100100100	3
133	0000100000001000	2	0100000010010010	1	0000100000001000	2	0100000010010010	1
134	0001000010000100	2	0001000010000100	2	1000100000100000	3	1000100000100000	3
135	0001000000010000	2	0001000000010000	2	1000010010000100	3	1000010010000100	3
136	0000100100010000	2	0000100100010000	2	1000010000010000	3	1000010000010000	3
137	0000100001000100	2	0000100001000100	2	1000001001000100	3	1000001001000100	3
138	0000010001001000	2	0100000001000010	1	0000010001001000	2	0100000001000010	1
139	0000010010010000	2	0000010010010000	2	1000001000001000	3	1000001000001000	3
140	0000010000100100	2	0000010000100100	2	1001000010000010	1	1001000010000010	1
141	0000010000000100	2	0000010000000100	2	1000000100000100	2	1000000100000100	2
142	0000010000000100	3	0000010000000100	3	1000000100100100	3	1000000100100100	3
143	0000010000100100	3	0000010000100100	3	1000000100000100	3	1000000100000100	3

--`,,```,,,,````-`-`,,`,,`,`,,`---

Copyright International Organization for Standardization
Provided by IHS under license with ISO
No reproduction or networking permitted without license from IHS Not for Resale

Table G.1 - Main Conversion Table (continued)

8-bit byte	State 1		State 2		State 3		State 4	
	Code Word msb lsb	Next State	Code Word msb lsb	Next State	Code Word msb lsb	Next State	Code Word msb lsb	Next State
144	0000010001001000	3	0100000010000100	2	0000010001001000	3	0100000010000100	2
145	0000010010010000	3	0000010010010000	3	1001000001000000	4	1001000001000000	4
146	0000100000001000	3	0100000000010000	2	0000100000001000	3	0100000000010000	2
147	0000100001000100	3	0000100001000100	3	1000000000100000	2	1000000000100000	2
148	0000100010001000	3	0100000010000100	3	0000100010001000	3	0100000010000100	3
149	0000100100010000	3	0000100100010000	3	1000000000100000	3	1000000000100000	3
150	0001000000010000	3	0001000000010000	3	0100000100001000	3	0100000100001000	3
151	0001000010000100	3	0001000010000100	3	1000000001000000	4	1000000001000000	4
152	0001000100001000	3	0100001000010000	3	0001000100001000	3	0100001000010000	3
153	0001001000010000	3	0001001000010000	3	1001000001000001	1	1001000001000001	1
154	0010000000100000	3	0010000000100000	3	0100000100001000	2	0100000100001000	2
155	0010000100000100	3	0010000100000100	3	1001000100100100	3	1001000100100100	3
156	0010000100100100	3	0010000100100100	3	1000100100100010	1	1000100100100010	1
157	0010001000001000	3	0100000000100001	1	0010001000001000	3	0100000000100001	1
158	0010001001000100	3	0010001001000100	3	1000100100000100	3	0100100100000000	4
159	0010010000010000	3	0010010000010000	3	1001001001000100	2	1001001001000100	2
160	0010010010000100	3	0010010010000100	3	1001001000001000	2	1001001000001000	2
161	0000001000010010	1	0100000000010000	3	1000100100010001	1	0100000000010000	3
162	0000001000001001	1	0100100100100100	2	1000100010010010	1	0100100100100100	2
163	0000000100000010	1	0100100100100100	3	1000100010001001	1	0100100100100100	3
164	0000000010000001	1	0100100100010010	1	1000100001000010	1	0100100100010010	1
165	0010010010010001	1	0010010010010001	1	1001000100100100	2	1001000100100100	2
166	0010010000100010	1	0010010000100010	1	1001000100000100	2	1001000100000100	2
167	0010010001001001	1	0100100100000100	2	0010010001001001	1	0100100100000100	2
168	0010010000010001	1	0010010000010001	1	1001001001000100	3	1001001001000100	3
169	0010001000010010	1	0010001000010010	1	1000100000100001	1	1000100000100001	1
170	0010000100000010	1	0010000100000010	1	1000010010010001	1	1000010010010001	1
171	0010001000001001	1	0100100000100000	3	0010001000001001	1	0100100000100000	3
172	0010000010000001	1	0010000010000001	1	1000010001001001	1	1000010001001001	1
173	0001001000100010	1	0001001000100010	1	1000010000100010	1	1000010000100010	1
174	0001001000010001	1	0001001000010001	1	1000010000010001	1	1000010000010001	1
175	0001000100010010	1	0001000100010010	1	1000001000010010	1	1000001000010010	1
176	0001000010000010	1	0001000010000010	1	1000001000001001	1	1000001000001001	1
177	0001001001001001	1	0100100010000010	1	0001001001001001	1	0100100010000010	1
178	0001000001000001	1	0001000001000001	1	1000000100000010	1	1000000100000010	1
179	0000100100100010	1	0000100100100010	1	1000000010000001	1	1000000010000001	1
180	0000100100010001	1	0000100100010001	1	0100100100001001	1	0100100100001001	1
181	0001000100001001	1	0100100000100000	2	0001000100001001	1	0100100000100000	2
182	0000100010010010	1	0000100010010010	1	0100010010001001	1	0100010010001001	1
183	0000100001000010	1	0000100001000010	1	0100001001001001	1	0100001001001001	1
184	0000100010001001	1	0100010010000100	3	0000100010001001	1	0100010010000100	3
185	0000100000100001	1	0000100000100001	1	1001000000100000	2	1001000000100000	2
186	0000010010010001	1	0000010010010001	1	1000100100001000	2	1000100100001000	2
187	0000010000100010	1	0000010000100010	1	1000100010000100	2	1000100010000100	2
188	0000010001001001	1	0100100001000001	1	0000010001001001	1	0100100001000001	1
189	0000010000010001	1	0000010000010001	1	1000100000010000	2	1000100000010000	2
190	0000001001001000	2	0100010010000100	2	1000010010001000	2	0100010010000100	2
191	0000001000100100	2	0100010000010000	2	1000010001000100	2	0100010000010000	2
192	0000001000000100	2	0100001001000100	2	1000010000001000	2	0100001001000100	2

Copyright International Organization for Standardization
Provided by IHS under license with ISO
No reproduction or networking permitted without license from IHS
Not for Resale

Table G.1 - Main Conversion Table (continued)

8-bit byte	State 1		State 2		State 3		State 4	
	Code Word msb lsb	Next State	Code Word msb lsb	Next State	Code Word msb lsb	Next State	Code Word msb lsb	Next State
193	0010010010001000	2	0100010000010000	3	0010010010001000	2	0100010000010000	3
194	0010010001000100	2	0010010001000100	2	1000001001001000	2	1000001001001000	2
195	0010010000001000	2	0100010010010010	1	0010010000001000	2	0100010010010010	1
196	0010001000100100	2	0010001000100100	2	1000001000100100	2	1000001000100100	2
197	0010001000000100	2	0010001000000100	2	1000001000000100	2	1000001000000100	2
198	0010001001001000	2	0100010001000010	1	0010001001001000	2	0100010001000010	1
199	0001001001000100	2	0001001001000100	2	0100001000001000	2	0100001000001000	2
200	0001000100100100	2	0001000100100100	2	1001000000100000	3	1001000000100000	3
201	0001000100000100	2	0001000100000100	2	1000100100001000	3	1000100100001000	3
202	0001001000001000	2	0100010000100001	1	0001001000001000	2	0100010000100001	1
203	0001000000100000	2	0001000000100000	2	1000100010000100	3	1000100010000100	3
204	0000100010000100	2	0000100010000100	2	1000010010001000	3	1000010010001000	3
205	0000100000010000	2	0000100000010000	2	1000010001000100	3	1000010001000100	3
206	0000100100001000	2	0100001000100010	1	0000100100001000	2	0100001000100010	1
207	0000010010001000	2	0100001000010001	1	0000010010001000	2	0100001000010001	1
208	0000010001000100	2	0000010001000100	2	1000001000100100	3	1000001000100100	3
209	0000010000001000	2	0100000100010010	1	0000010000001000	2	0100000100010010	1
210	0000001000000100	3	0100000010000010	1	1000010000001000	3	0100000010000010	1
211	0000001000100100	3	0100000100100100	2	1000001001001000	3	0100000100100100	2
212	0000001001001000	3	0100000100000100	2	1000001000000100	3	0100000100000100	2
213	0000010000001000	3	0100000001000001	1	0000010000001000	3	0100000001000001	1
214	0000010001000100	3	0000010001000100	3	0100001000001000	3	0100001000001000	3
215	0000010010001000	3	0100000000100000	2	0000010010001000	3	0100000000100000	2
216	0000100000010000	3	0000100000010000	3	1001001000010000	3	1001001000010000	3
217	0000100010000100	3	0000100010000100	3	1001000100000100	3	1001000100000100	3
218	0000100100001000	3	0100000100000100	3	0000100100001000	3	0100000100000100	3
219	0001000000100000	3	0001000000100000	3	0100000100001001	1	0100000100001001	1
220	0001000100000100	3	0001000100000100	3	1001001000010000	2	1001001000010000	2
221	0001000100100100	3	0001000100100100	3	1001000100001000	2	1001000100001000	2
222	0001001000001000	3	0100000100100100	3	0001001000001000	3	0100000100100100	3
223	0001001001000100	3	0001001001000100	3	1001001000001000	3	1001001000001000	3
224	0010001000000100	3	0010001000000100	3	1000100000010000	3	1000100000010000	3
225	0010001000100100	3	0010001000100100	3	1001001001000010	1	1001001001000010	1
226	0010001001001000	3	0100001001000100	3	0010001001001000	3	0100001001000100	3
227	0010010000001000	3	0100100100000100	3	0010010000001000	3	0100100100000100	3
228	0010010001000100	3	0010010001000100	3	1001000100001000	3	1001000100001000	3
229	0010010010001000	3	0100000000100000	3	0010010010001000	3	0100000000100000	3
230	0010000001000000	4	0010000001000000	4	1001001000100001	1	1001001000100001	1
231	0000001001001001	1	0100100100100010	1	1001000100100010	1	0100100100100010	1
232	0000001000100010	1	0100100010000100	2	1001000100010001	1	0100100010000100	2
233	0000001000010001	1	0100100000010000	2	1001000010010010	1	0100100000010000	2
234	0000000100010010	1	0100000001000000	4	1001000010001001	1	0100000001000000	4
235	0000000100001001	1	0100100100010001	1	1001000001000010	1	0100100100010001	1
236	0000000010000010	1	0100100010010010	1	1001000000100001	1	0100100010010010	1
237	0000000001000001	1	0100100001000010	1	1000100100100001	1	0100100001000010	1
238	0010010000010010	1	0010010000010010	1	1000100010010001	1	1000100010010001	1
239	0010001000000010	1	0010001000000010	1	1001000010000100	3	1001000010000100	3
240	0010010000001001	1	0100100010000100	3	0010010000001001	1	0100100010000100	3
241	0010000100000001	1	0010000100000001	1	1001000010000100	2	1001000010000100	2

--`,,```,,,,````-`-`,,`,,`,`,,`---

Copyright International Organization for Standardization
Provided by IHS under license with ISO
No reproduction or networking permitted without license from IHS Not for Resale

Table G.1 - Main Conversion Table (concluded)

8-bit byte	State 1		State 2		State 3		State 4	
	Code Word msb lsb	Next State	Code Word msb lsb	Next State	Code Word msb lsb	Next State	Code Word msb lsb	Next State
242	0001001000010010	1	0001001000010010	1	1000000010000000	4	1000000010000000	4
243	0001000100000010	1	0001000100000010	1	1000100001001001	1	1000100001001001	1
244	0001001000001001	1	0100100000100001	1	0001001000001001	1	0100100000100001	1
245	0001000010000001	1	0001000010000001	1	1000100000100010	1	1000100000100010	1
246	0000100100010010	1	0000100100010010	1	1000100000010001	1	1000100000010001	1
247	0000100010000010	1	0000100010000010	1	1000010000010010	1	1000010000010010	1
248	0000100100001001	1	0100010010010001	1	0000100100001001	1	0100010010010001	1
249	0000100001000001	1	0000100001000001	1	1000010000001001	1	1000010000001001	1
250	0000010010010010	1	0000010010010010	1	1000001000000010	1	1000001000000010	1
251	0000010001000010	1	0000010001000010	1	1000000100000001	1	1000000100000001	1
252	0000010010001001	1	0100010000100010	1	0000010010001001	1	0100010000100010	1
253	0000010000100001	1	0000010000100001	1	0100100010001001	1	0100100010001001	1
254	0000001001000100	2	0100010000010001	1	1001000000010000	2	0100010000010001	1
255	0000001000001000	2	0100001000010010	1	1000100100010000	2	0100001000010010	1

Copyright International Organization for Standardization
Provided by IHS under license with ISO
No reproduction or networking permitted without license from IHS
Not for Resale

Table G.2 - Substitution table

8-bit byte	State 1		State 2		State 3		State 4	
	Code Word msb lsb	Next State	Code Word msb lsb	Next State	Code Word msb lsb	Next State	Code Word msb lsb	Next State
0	0000010010000000	4	0000010010000000	4	0100100001001000	2	0100100001001000	2
1	0000100100000000	4	0000100100000000	4	0100100001001000	3	0100100001001000	3
2	0001001000000000	4	0001001000000000	4	0100100000001001	1	0100100000001001	1
3	0000001001000000	4	0100100000000001	1	1000001000000000	4	0100100000000001	1
4	0000000100100000	3	0100100000000010	1	1001000000000100	3	0100100000000010	1
5	0000000010010000	3	0100001000000000	4	1001000000100100	3	0100001000000000	4
6	0000000001001000	3	0100100000000100	2	1001000001001000	3	0100100000000100	2
7	0000000001001000	2	0100000100000000	4	1001000000000100	2	0100000100000000	4
8	0000000010010000	2	0100100010010000	3	1001000000100100	2	0100100010010000	3
9	0000000100100000	2	0100100000100100	2	1001000001001000	2	0100100000100100	2
10	0000010001000000	4	0000010001000000	4	1001001001000000	4	1001001001000000	4
11	0000100010000000	4	0000100010000000	4	1000100001001000	3	1000100001001000	3
12	0001000100000000	4	0001000100000000	4	0100010001001000	3	0100010001001000	3
13	0010001000000000	4	0010001000000000	4	1000100000000100	3	1000100000000100	3
14	0000001000100000	3	0100100000000100	3	1001000010010000	3	0100100000000100	3
15	0000000100010000	3	0100100010010000	2	1001000100100000	3	0100100010010000	2
16	0000000010001000	3	0100001000000001	1	0100100000001000	3	0100001000000001	1
17	0000000001000100	3	0100010000000010	1	0100100010001000	3	0100010000000010	1
18	0000000001000100	2	0100100000100100	3	1001000010010000	2	0100100000100100	3
19	0000000010001000	2	0100100100100000	3	1001000100100000	2	0100100100100000	3
20	0000000100010000	2	0100100100100000	2	0100010001001000	2	0100100100100000	2
21	0000001000100000	2	0100100000010010	1	0100100000001000	2	0100100000010010	1
22	0000010010000001	1	0000010010000001	1	1000100000100100	3	1000100000100100	3
23	0000100100000001	1	0000100100000001	1	1000100010010000	3	1000100010010000	3
24	0001001000000001	1	0001001000000001	1	0100100010001000	2	0100100010001000	2
25	0010010000000001	1	0010010000000001	1	1000100000000100	2	1000100000000100	2
26	0000000001001001	1	0100010000000100	3	1000010000000001	1	0100010000000100	3
27	0000000010010001	1	0100000100000001	1	1000100000000010	1	0100000100000001	1
28	0000000100100001	1	0100010000000100	2	1001000000001001	1	0100010000000100	2
29	0000001001000001	1	0100001000000010	1	1001000000010010	1	0100001000000010	1
30	0000100001000000	4	0000100001000000	4	1000100000100100	2	1000100000100100	2
31	0001000010000000	4	0001000010000000	4	1000100001001000	2	1000100001001000	2
32	0010000100000000	4	0010000100000000	4	0100010000001001	1	0100010000001001	1
33	0000010000100000	3	0000010000100000	3	0100100001001001	1	0100100001001001	1
34	0000001000010000	3	0100010000010010	1	1000100100100000	3	0100010000010010	1
35	0000000100001000	3	0100100000010001	1	1001000000001000	3	0100100000010001	1
36	0000000010000100	3	0100000010000000	4	1001000001000100	3	0100000010000000	4
37	0000010000100000	2	0000010000100000	2	1000001000000001	1	1000001000000001	1
38	0000000010000100	2	0100010000100100	3	1000100010010000	2	0100010000100100	3
39	0000000100001000	2	0100010000100100	2	1000100100100000	2	0100010000100100	2
40	0000001000010000	2	0100100000100010	1	1001000000001000	2	0100100000100010	1
41	0000010001000001	1	0000010001000001	1	1000010000000010	1	1000010000000010	1
42	0000010010000010	1	0000010010000010	1	1000000100000000	4	1000000100000000	4
43	0000100010000001	1	0000100010000001	1	1001000001000100	2	1001000001000100	2
44	0000100100000010	1	0000100100000010	1	1000100000001001	1	1000100000001001	1
45	0001000100000001	1	0001000100000001	1	1001000010001000	3	1001000010001000	3
46	0001001000000010	1	0001001000000010	1	1001000100010000	3	1001000100010000	3

Copyright International Organization for Standardization
Provided by IHS under license with ISO
No reproduction or networking permitted without license from IHS
Not for Resale

Table G.2 - Substitution table (concluded)

8-bit byte	State 1		State 2		State 3		State 4	
	Code Word msb lsb	Next State	Code Word msb lsb	Next State	Code Word msb lsb	Next State	Code Word msb lsb	Next State
47	0010001000000001	1	0010001000000001	1	1000100000010010	1	1000100000010010	1
48	0010010000000010	1	0010010000000010	1	0100010000001000	3	0100010000001000	3
49	0000000001000010	1	0100100010010001	1	1001000000010001	1	0100100010010001	1
50	0000000010001001	1	0100100001000100	3	1001000000100010	1	0100100001000100	3
51	0000000010010010	1	0100010010010000	3	1001000001001001	1	0100010010010000	3
52	0000000100010001	1	0100010010010000	2	1001000010010001	1	0100010010010000	2
53	0000000100100010	1	0100100001000100	2	1001000100100001	1	0100100001000100	2
54	0000001000100001	1	0100100100100001	1	1001001001000001	1	0100100100100001	1
55	0000001001000010	1	0100100100010000	3	0100001000001001	1	0100100100010000	3
56	0001000001000000	4	0001000001000000	4	1001001000100000	3	1001001000100000	3
57	0010000010000000	4	0010000010000000	4	1001000010001000	2	1001000010001000	2
58	0010010010010000	3	0010010010010000	3	1001000100010000	2	1001000100010000	2
59	0010010001001000	3	0100100100010000	2	0010010001001000	3	0100100100010000	2
60	0010010000100100	3	0010010000100100	3	1001001000100000	2	1001001000100000	2
61	0010010000000100	3	0010010000000100	3	0100001001001000	2	0100001001001000	2
62	0001001001001000	3	0100000010000001	1	0001001001001000	3	0100000010000001	1
63	0001001000100100	3	0001001000100100	3	0100001001001000	3	0100001001001000	3
64	0001001000000100	3	0001001000000100	3	0100010010001000	3	0100010010001000	3
65	0000100100100100	3	0000100100100100	3	0100100100001000	3	0100100100001000	3
66	0000100100000100	3	0000100100000100	3	1000010000000100	3	1000010000000100	3
67	0000100000100000	3	0000100000100000	3	1000010000100100	3	1000010000100100	3
68	0000010010000100	3	0000010010000100	3	1000010001001000	3	1000010001001000	3
69	0000010000010000	3	0000010000010000	3	1000010010010000	3	1000010010010000	3
70	0000001001000100	3	0100001000000100	2	1000100000001000	3	0100001000000100	2
71	0000001000001000	3	0100100000010000	3	1000100010001000	3	0100100000010000	3
72	0000000100100100	3	0100010001000100	3	1000100100010000	3	0100010001000100	3
73	0000000100000100	3	0100001000100100	3	1001000000010000	3	0100001000100100	3
74	0000010000010000	2	0000010000010000	2	1000100001000100	3	1000100001000100	3
75	0001001001001000	2	0100001000000100	3	0001001001001000	2	0100001000000100	3
76	0000010010000100	2	0000010010000100	2	0100010000001000	2	0100010000001000	2
77	0000100000100000	2	0000100000100000	2	0100010010001000	2	0100010010001000	2
78	0010010001001000	2	0100000100000010	1	0010010001001000	2	0100000100000010	1
79	0000100100000100	2	0000100100000100	2	0100100100001000	2	0100100100001000	2
80	0000100100100100	2	0000100100100100	2	1000010000000100	2	1000010000000100	2
81	0001001000000100	2	0001001000000100	2	1000010000100100	2	1000010000100100	2
82	0001001000100100	2	0001001000100100	2	1000010001001000	2	1000010001001000	2
83	0010010000000100	2	0010010000000100	2	1000010010010000	2	1000010010010000	2
84	0010010000100100	2	0010010000100100	2	1000100000001000	2	1000100000001000	2
85	0010010010010000	2	0010010010010000	2	0100010001001001	1	0100010001001001	1
86	0000000100000100	2	0100001000100100	2	1000100001000100	2	0100001000100100	2
87	0000000100100100	2	0100010001000100	2	1000100010001000	2	0100010001000100	2

Copyright International Organization for Standardization
Provided by IHS under license with ISO
No reproduction or networking permitted without license from IHS
Not for Resale

Annex H

(normative)

Definition of the write pulse

The wave forms of the NRZI signal and the shape of light-pulse shall be as shown in figure H.1.

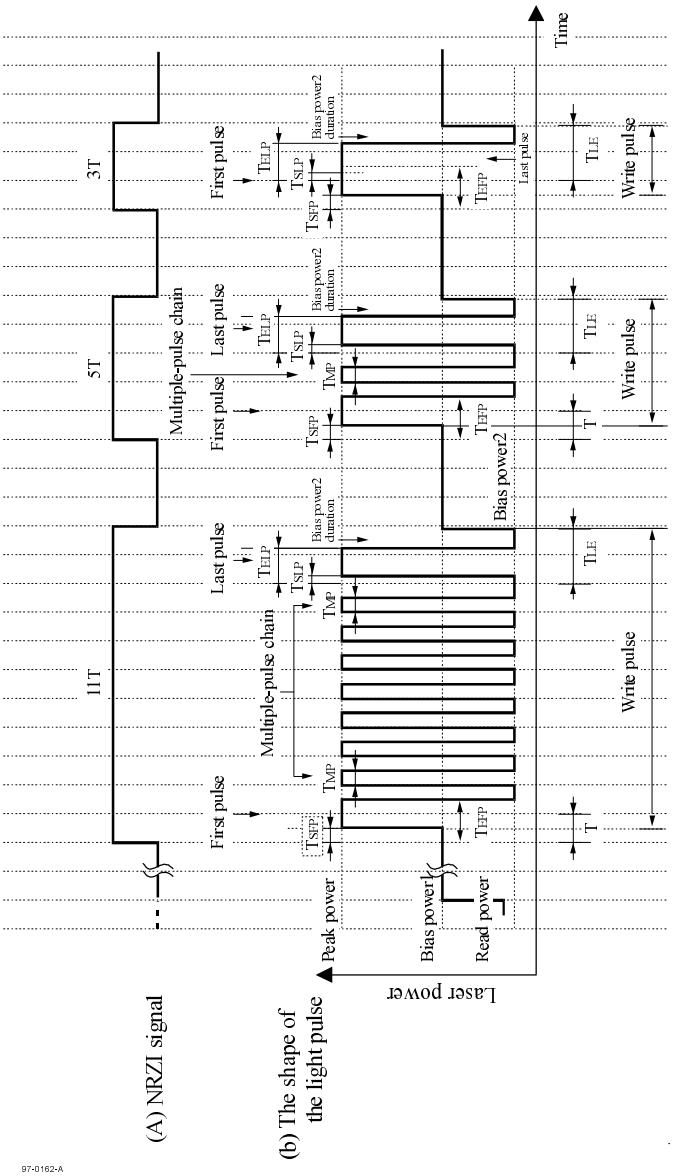

Figure H.1 - The wave form of the Write pulse

Copyright International Organization for Standardization
Provided by IHS under license with ISO
No reproduction or networking permitted without license from IHS
Not for Resale

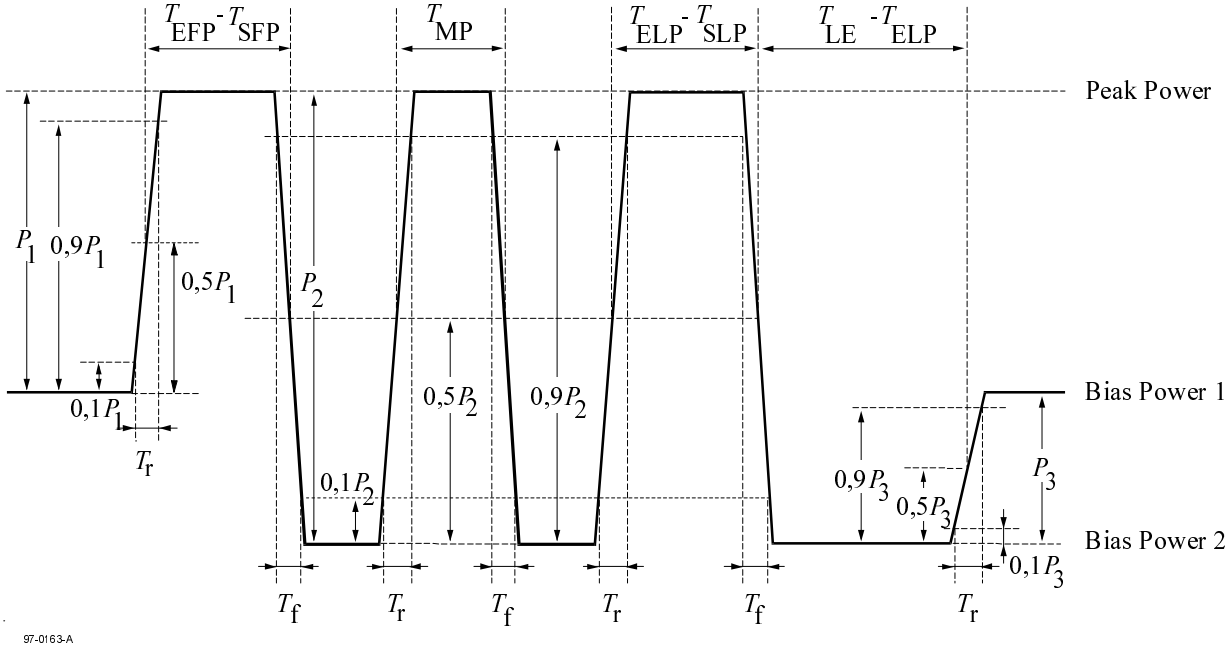

Figure H.2 - Definition of the light-pulse shape

Copyright International Organization for Standardization
Provided by IHS under license with ISO
No reproduction or networking permitted without license from IHS
Not for Resale

Annex J

(informative)

Guideline for randomization of the Gap length, the Guard 1 length and the recording polarity

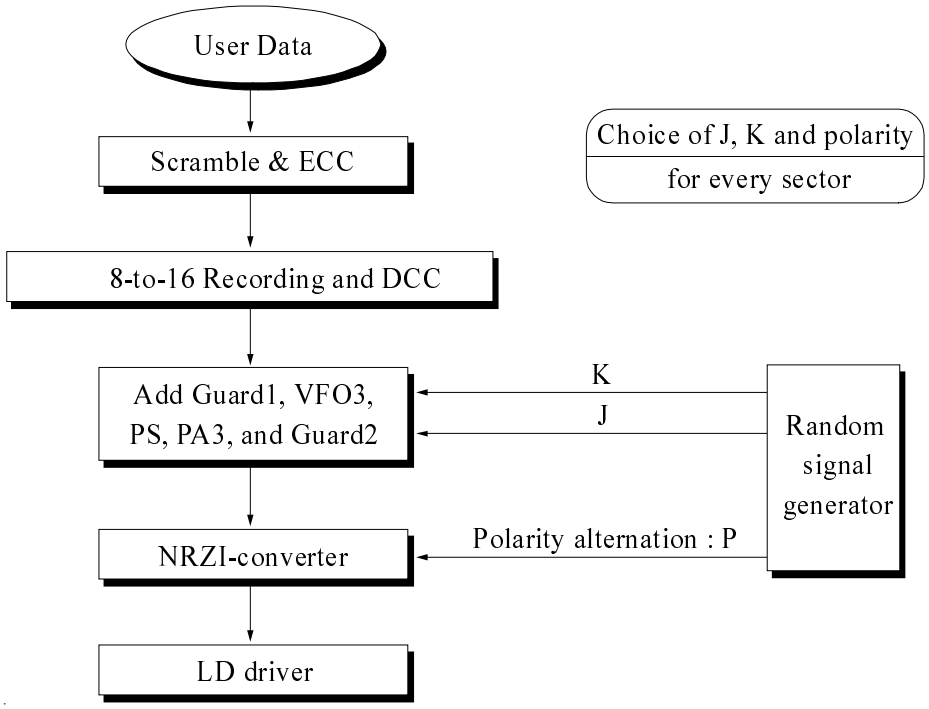

Figure J.1 - Guideline for randomization of the Gap length, the Guard 1 length and the recording polarity

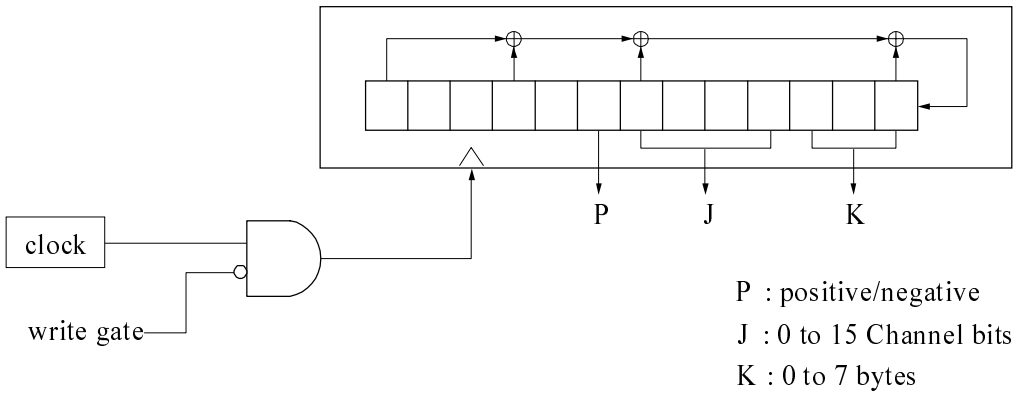

⊕ stands for Exclusive OR

Figure J.2 - Example of a random signal generator

Copyright International Organization for Standardization
Provided by IHS under license with ISO
No reproduction or networking permitted without license from IHS
Not for Resale

Annex K

(informative)

Transportation

K.1 General

As transportation occurs under a wide range of temperature and humidity variations, for differing periods, by many methods of transport and in all parts of the world, it is not possible to specify mandatory conditions for transportation or for packaging.

K.2 Packaging

The form of packaging should be agreed between sender and recipient or, in absence of such an agreement, is the responsibility of the sender. It should take into account the following hazards.

K.2.1 Temperature and humidity

Insulation and wrapping should be designed to maintain the conditions for storage over the estimated period of transportation.

K.2.2 Impact loads and vibrations

a) Avoid mechanical loads that would distort the shape of the disk.

b) Avoid dropping the disk.

c) Disks should be packed in a rigid box containing adequate shock-absorbent material.

d) The final box should have a clean interior and a construction that provides sealing to prevent the ingress of dirt and moisture.

--`,,```,,,,````-`-`,,`,,`,`,,`---
Copyright International Organization for Standardization
Provided by IHS under license with ISO
No reproduction or networking permitted without license from IHS
Not for Resale

Annex L

(informative)

Guideline for sector replacement

Clause 17 assumes that a defective sector will be replaced by the defect management. The following is an example of the criteria which could be applied by the defect management.

PID error: There are 3 or more erroneous PIDs within a sector.
Row error: There are 4 or more erroneous bytes in a row of an ECC Block.

Slipping Algorithm

If a sector presents a PID error, it should be replaced.
If a sector presents 4 or more row errors, it should be replaced.
If an ECC Block presents 6 or more row errors, then enough sectors should be slipped so as to reduce the number of row errors in the ECC Block to less than 6.

Linear Replacement Algorithm

If an ECC Block presents 1 or more sectors containing a PID error, then the whole ECC Block should be replaced.
If an ECC Block presents 8 or more row errors, then the whole ECC Block should be replaced.

Copyright International Organization for Standardization
Provided by IHS under license with ISO
No reproduction or networking permitted without license from IHS Not for Resale

© ISO/IEC

ICS 35.220.30

Price based on 95 pages

Copyright International Organization for Standardization
Provided by IHS under license with ISO
No reproduction or networking permitted without license from IHS

Not for Resale