INTERNATIONAL STANDARD

ISO/IEC 16382

First edition
2000-05-15

Information technology — Data interchange on 12,7 mm 208-track magnetic tape cartridges — DLT 6 format

Technologies de l'information — Échange de données sur cartouches de bande magnétique de 12,7 mm *à 208 pistes — Format DLT 6*

Reference number
ISO/IEC 16382:2000(E)

© ISO/IEC 2000

Copyright International Organization for Standardization
Provided by IHS under license with ISO
No reproduction or networking permitted without license from IHS

Not for Resale

PDF disclaimer

This PDF file may contain embedded typefaces. In accordance with Adobe's licensing policy, this file may be printed or viewed but shall not be edited unless the typefaces which are embedded are licensed to and installed on the computer performing the editing. In downloading this file, parties accept therein the responsibility of not infringing Adobe's licensing policy. The ISO Central Secretariat accepts no liability in this area.

Adobe is a trademark of Adobe Systems Incorporated.

Details of the software products used to create this PDF file can be found in the General Info relative to the file; the PDF-creation parameters were optimized for printing. Every care has been taken to ensure that the file is suitable for use by ISO member bodies. In the unlikely event that a problem relating to it is found, please inform the Central Secretariat at the address given below.

© ISO/IEC 2000

All rights reserved. Unless otherwise specified, no part of this publication may be reproduced or utilized in any form or by any means, electronic or mechanical, including photocopying and microfilm, without permission in writing from either ISO at the address below or ISO's member body in the country of the requester.

ISO copyright office
Case postale 56 • CH-1211 Geneva 20
Tel. + 41 22 749 01 11
Fax + 41 22 734 10 79
E-mail copyright@iso.ch
Web www.iso.ch

Printed in Switzerland

Copyright International Organization for Standardization
Provided by IHS under license with ISO
No reproduction or networking permitted without license from IHS

© ISO/IEC 2000 – All rights reserved

Not for Resale

Contents

Section 1 - General **1**

1 Scope **1**

2 Conformance **1**

2.1 Magnetic tape cartridges **1**
2.2 Generating systems **1**
2.3 Receiving systems **1**

3 Normative references **1**

4 Terms and definitions **1**

4.1 Average Signal Amplitude **1**
4.2 azimuth **2**
4.3 back surface **2**
4.4 Beginning-Of-Tape marker (BOT) **2**
4.5 block **2**
4.6 byte **2**
4.7 cartridge **2**
4.8 Cyclic Redundancy Check (CRC) character **2**
4.9 Early Warning (EW) **2**
4.10 Error-Detecting Code (EDC) **2**
4.11 End-Of-Tape marker (EOT) **2**
4.12 Entity **2**
4.13 Error-Correcting Code (ECC) **2**
4.14 Envelope **2**
4.15 Envelope size **2**
4.16 flux transition position **2**
4.17 flux transition spacing **2**
4.18 Group Record **2**
4.19 logical track **2**
4.20 magnetic tape **2**
4.21 Master Standard Reference Tape **2**
4.22 object **2**
4.23 page **2**
4.24 physical recording density **2**
4.25 physical track **2**
4.26 Record **2**
4.27 Reference Edge **2**
4.28 Reference Field **2**
4.29 Secondary Standard Reference Tape **2**
4.30 Standard Reference Amplitude (SRA) **3**
4.31 Standard Reference Current **3**
4.32 Test Recording Current **3**
4.33 Typical Field **3**

5 Conventions and notations **3**

5.1 Representation of numbers **3**
5.2 Dimensions **3**
5.3 Names **3**
5.4 Acronyms **3**

© ISO/IEC 2000 – All rights reserved

Copyright International Organization for Standardization
Provided by IHS under license with ISO
No reproduction or networking permitted without license from IHS
Not for Resale

6	Environment and safety	**3**
6.1	Cartridge and tape testing environment	**4**
6.2	Cartridge operating environment	**4**
6.3	Cartridge storage environment	**4**
6.4	Safety	**4**
6.4.1	Safeness	**4**
6.4.2	Flammability	**4**
6.5	Transportation	**4**
Section 2 - Requirements for the unrecorded tape		**4**
7	Mechanical and electrical requirements	**4**
7.1	Material	**4**
7.2	Tape length	**4**
7.3	Width	**4**
7.4	Total thickness	**5**
7.5	Discontinuity	**5**
7.6	Longitudinal curvature	**5**
7.6.1	Requirement	**5**
7.6.2	Procedure	**5**
7.7	Out-of-Plane distortions	**5**
7.8	Cupping	**5**
7.9	Roughness of the coating surfaces	**5**
7.9.1	Roughness of the back coating surface	**5**
7.9.2	Roughness of the magnetic coating surface	**5**
7.10	Coating adhesion	**5**
7.11	Layer-to-layer adhesion	**6**
7.11.1	Requirements	**6**
7.11.2	Procedure	**6**
7.12	Modulus of elasticity	**7**
7.12.1	Requirement	**7**
7.12.2	Procedure	**7**
7.13	Flexural rigidity	**7**
7.13.1	Requirement	**7**
7.13.2	Procedure	**7**
7.14	Tensile yield force	**7**
7.14.1	Procedure	**8**
7.15	Electrical resistance	**8**
7.15.1	Requirement	**8**
7.15.2	Procedure	**8**
7.16	Inhibitor tape	**8**
7.17	Abrasivity	**8**
7.17.1	Requirement	**8**
7.17.2	Procedure	**8**
7.18	Light transmittance of the tape and the leader	**9**
7.19	Coefficient of dynamic friction	**9**
7.19.1	Requirements	**9**
7.19.2	Procedure for the measurement of the friction between the magnetic surface and the back surface	**9**
7.19.3	Procedure for the measurement of the friction between the magnetic surface or the back surface and calcium titanate ceramic	**10**

© ISO/IEC 2000 – All rights reserved
Copyright International Organization for Standardization
Provided by IHS under license with ISO
No reproduction or networking permitted without license from IHS
Not for Resale

8 Magnetic recording characteristics **10**

8.1 Typical Field **10**
8.2 Signal amplitude **11**
8.3 Resolution **11**
8.4 Overwrite **11**

8.4.1 Requirement **11**

8.5 Peak shift **11**

8.5.1 Requirement **11**
8.5.2 Procedure **11**

9 Tape quality **12**
9.1 Missing pulses **12**
9.1.1 Requirement **12**
9.2 Missing pulse zone **12**
9.2.1 Requirement **12**
9.3 Tape durability **12**

Section 3 - Mechanical specifications of the tape cartridge **12**

10 General **12**

10.1 Bottom side and right side **13**
10.2 Back side and left side **14**
10.3 Tape reel **14**
10.4 Tape leader **15**
10.5 Front side **16**
10.6 Operation of the cartridge **16**
10.7 Tape winding **17**
10.8 Moment of inertia **17**
10.9 Material **18**

Section 4 - Requirements for an interchanged tape **27**

11 Method of recording **27**

11.1 Physical recording density **27**
11.2 Channel bit cell length **27**

11.2.1 Average Channel bit cell length **27**
11.2.2 Long-term average Channel bit cell length **27**
11.2.3 Short-term average Channel bit cell length **27**

11.3 Flux transition spacing **27**
11.4 Read signal amplitude **27**
11.5 Azimuth **28**
11.6 Channel skew **28**

12 Tape format **28**

12.1 Reference Edge **28**
12.2 Direction of recording **28**
12.3 Tape layout **28**
12.4 Calibration and Directory Area **28**

12.4.1 Scratch Area **29**
12.4.2 Guard Area G1 **29**
12.4.3 Calibration Tracks Area **29**
12.4.4 Guard Area G2 **30**
12.4.5 Directory Area **30**
12.4.6 Guard Area G3 **30**

12.5 Data Area **30**

12.5.1 Physical tracks **31**
12.5.2 Logical tracks **32**

--`,,```,,,,````-`-`,,`,,`,`,,`---

© ISO/IEC 2000 – All rights reserved

Copyright International Organization for Standardization
Provided by IHS under license with ISO
No reproduction or networking permitted without license from IHS
Not for Resale

13 Data format **34**

13.1 Data Bytes **34**
13.2 Data Blocks **34**
13.3 Types of Blocks **34**
13.4 Entities **34**
13.5 Envelopes **34**
13.6 Block format **34**

13.6.1 Preamble **35**
13.6.2 Sync **35**
13.6.3 Data Field **35**
13.6.4 EDC **36**
13.6.5 Control Field 1 (CF1) **37**
13.6.6 Control Field 2 (CF2) **38**
13.6.7 CRC **39**
13.6.8 Postamble **39**

14 Use of blocks **39**

14.1 Data Blocks **39**
14.2 Filler Blocks **39**
14.3 End of Track Blocks (EOTR) **39**
14.4 End of Data Blocks (EOD) **40**
14.5 ECC Blocks **40**

15 Format of Entities **40**

16 Format of Envelopes **40**

17 Error handling **40**

Annexes

A - Measurement of light transmittance **41**

B - Generation of the Data Block CRCs **44**

C - ECC generation **45**

D - Generation of page CRCs **48**

E - Format of MAP entries **49**

F - Format of Control Field 1 **50**

G - Format of Control Field 2 **51**

H - Recommendations for transportation **52**

J - Inhibitor tape **53**

K - Recommendations on tape durability **54**

L - Handling guidelines **55**

© ISO/IEC 2000 – All rights reserved

Copyright International Organization for Standardization
Provided by IHS under license with ISO
No reproduction or networking permitted without license from IHS

Not for Resale

Foreword

ISO (the International Organization for Standardization) and IEC (the International Electrotechnical Commission) form the specialized system for worldwide standardization. National bodies that are members of ISO or IEC participate in the development of International Standards through technical committees established by the respective organization to deal with particular fields of technical activity. ISO and IEC technical committees collaborate in fields of mutual interest. Other international organizations, governmental and non-governmental, in liaison with ISO and IEC, also take part in the work.

International Standards are drafted in accordance with the rules given in the ISO/IEC Directives, Part 3.

In the field of information technology, ISO and IEC have established a joint technical committee, ISO/IEC JTC 1. Draft International Standards adopted by the joint technical committee are circulated to national bodies for voting. Publication as an International Standard requires approval by at least 75 % of the national bodies casting a vote.

Attention is drawn to the possibility that some of the elements of this International Standard may be the subject of patent rights. ISO and IEC shall not be held responsible for identifying any or all such patent rights.

This International Standard was prepared by ECMA (as Standard ECMA-286) and was adopted, under a special “fast-track procedure”, by Joint Technical Committee ISO/IEC JTC 1, *Information technology*, in parallel with its approval by national bodies of ISO and IEC.

Annexes A to G form a normative part of this International Standard. Annexes H to L are for information only.

© ISO/IEC 2000 – All rights reserved

Copyright International Organization for Standardization
Provided by IHS under license with ISO
No reproduction or networking permitted without license from IHS
Not for Resale

Information technology — Data interchange on 12,7 mm 208-track magnetic tape cartridges — DLT 6 format

Section 1 - General

1 Scope

This International Standard specifies the physical and magnetic characteristics of a 12,7 mm wide, 208-track magnetic tape cartridge, to enable physical interchangeability of such cartridges between drives. It also specifies the quality of the recorded signals, a format - called Digital Linear Tape 6 (DLT 6) - and a recording method, thereby allowing data interchange between drives. Together with a labelling standard, for instance International Standard ISO 1001 for Magnetic Tape Labelling, it allows full data interchange by means of such magnetic tape cartridges.

2 Conformance

2.1 Magnetic tape cartridges

A magnetic tape cartridge shall be in conformance with this International Standard if it satisfies all mandatory requirements of this Standard. The tape requirements shall be satisfied throughout the extent of the tape.

2.2 Generating systems

A system generating a magnetic tape cartridge for interchange shall be in conformance with this International Standard if all the recordings that it makes on a tape according to 2.1 meet the mandatory requirements of this International Standard.

In addition, a claim of conformance shall state

— whether or not one, or more registered algorithm(s) are implemented within the system, and are able to compress data received from the host prior to collecting the data into blocks, and

— the registered identification number(s) of the implemented compression algorithm(s).

2.3 Receiving systems

A system receiving a magnetic tape cartridge for interchange shall be in conformance with this International Standard if it is able to handle any recording made on a tape according to 2.1.

In addition, it shall

— whether or not one, or more de-compression algorithm(s) are implemented within the system, and are able to be applied to de-compress data prior to making such data available to the host,

— the registered identification number(s) of the implemented compression algorithm(s).

3 Normative references

The following normative documents contain provisions which, through reference in this text, constitute provisions of this International Standard. For dated references, subsequent amendments to, or revisions of, any of these publications do not apply. However, parties to agreements based on this International Standard are encouraged to investigate the possibility of applying the most recent editions of the normative documents indicated below. For undated references, the latest edition of the normative document referred to applies. Members of ISO and IEC maintain registers of currently valid International Standards.

ISO 1001:1986, *Information processing — File structure and labelling of magnetic tapes for information interchange.*

ISO 1302:1992, *Technical drawings — Method of indicating surface texture.*

ISO/IEC 11576:1994, *Information technology — Procedure for the registration of algorithms for the lossless compression of data.*

4 Terms and definitions

For the purposes of this International Standard, the following terms and definitions apply.

4.1 Average Signal Amplitude: The average peak-to-peak value of the output signal from the read head at the physical recording density of 2 578 ftpmm measured over a minimum length of track of 25,4 mm, exclusive of missing pulses.

© ISO/IEC 2000 – All rights reserved

Copyright International Organization for Standardization
Provided by IHS under license with ISO
No reproduction or networking permitted without license from IHS
Not for Resale

4.2 **azimuth:** The angular deviation, in degrees of arc, of the mean flux transition line of the recording made on a track from a line normal to the Reference Edge.

4.3 **back surface:** The surface of the tape opposite the magnetic coating which is used to record data.

4.4 **Beginning-Of-Tape marker (BOT):** A hole punched on the centreline of the tape towards the end nearest to the leader.

4.5 **block:** A set of contiguous bytes recorded on a physical track and considered as a unit.

4.6 **byte:** An ordered set of bits acted upon as a unit.

NOTE - In this International Standard, all bytes are 8-bit bytes.

4.7 **cartridge:** A case containing a single supply reel of 12,7 mm wide magnetic tape with a leader attached at the outer end.

4.8 **Cyclic Redundancy Check (CRC) character:** A 64-bit character, generated by a mathematical computation, used for error detection.

4.9 **Early Warning (EW):** A signal generated by the drive indicating the approaching end of the recording area.

4.10 **Error-Detecting Code (EDC):** A mathematical computation yielding check bytes used for error detection.

4.11 **End-Of-Tape marker (EOT):** A hole punched on the centreline of the tape towards the end farthest from the leader.

4.12 **Entity:** A group of twenty blocks treated as a logical unit and recorded on a logical track, except Filler Blocks, if any.

4.13 **Error-Correcting Code (ECC):** A mathematical computation yielding check bytes used for the correction of errors detected by the CRC and the EDC.

4.14 **Envelope:** A group of Entities.

4.15 **Envelope size:** The number of Entities in an Envelope.

4.16 **flux transition position:** The point which exhibits the maximum free-space flux density normal to the tape surface.

4.17 **flux transition spacing:** The distance on the magnetic tape between successive flux transitions.

4.18 **Group Record:** A Record consisting of a series of Records of equal size.

4.19 **logical track:** A group of four physical tracks that are written or read simultaneously.

4.20 **magnetic tape:** A tape that accepts and retains magnetic signals intended for input, output, and storage purposes on computers and associated equipment.

4.21 **Master Standard Reference Tape:** A tape selected as the standard for Reference Field, signal amplitude, resolution, peakshift, and overwrite characteristics.

NOTE - The Master Standard Reference Tape has been established by the Quantum Corporation.

4.22 **object:** A Record or a page of type Tape Mark.

4.23 **page:** A logical division of a block.

4.24 **physical recording density:** The number of recorded flux transitions per unit length of track, expressed in flux transitions per millimetre (ftpmm).

4.25 **physical track:** A longitudinal area on the tape along which a series of magnetic signals can be recorded.

4.26 **Record:** A collection of User Bytes, the number of which is determined by the host.

4.27 **Reference Edge:** The bottom edge of the tape when viewing the magnetic coating of the tape with the BOT to the left and the EOT to the right of the observer.

4.28 **Reference Field:** The Typical Field of the Master Standard Reference Tape.

4.29 **Secondary Standard Reference Tape:** A tape the characteristics of which are known and stated in relation to those of the Master Standard Reference Tape.

NOTE - Secondary Standard Reference Tapes can be ordered under Reference "SSRT/DLT4"from Quantum Corporation, 333 South Street, Shrewsbury, Mass. 01545-4195, USA. It is intended that these be used for calibrating tertiary reference tapes for routine calibration.

In principle, these Secondary Standard Reference Tapes will be available for a period of 10 years from the publication of the first version of this International Standard. However, by agreement between ECMA and Quantum Corporation, this period may be changed to take into account the demand for such Secondary Standard Reference Tapes.

© ISO/IEC 2000 – All rights reserved
Copyright International Organization for Standardization
Provided by IHS under license with ISO
No reproduction or networking permitted without license from IHS
Not for Resale

4.30 Standard Reference Amplitude (SRA): The Average Signal Amplitude from the Master Standard Reference Tape when it is recorded with the Test Recording Current at 2 578 ftpmm.

4.31 Standard Reference Current: The current that produces the Reference Field.

4.32 Test Recording Current: The current that is 1,1 times the Standard Reference Current.

4.33 Typical Field: In the plot of the Average Signal Amplitude against the recording field at the physical recording density of 2 578 ftpmm, the minimum field that causes an Average Signal Amplitude equal to 95 % of the maximum Average Signal Amplitude.

5 Conventions and notations

5.1 Representation of numbers

The following conventions and notations apply in this International Standard, unless otherwise stated.

— A measured value is rounded off to the least significant digit of the corresponding specified value. It implies that a specified value of 1,26 with a positive tolerance +0,01, and a negative tolerance -0,02 allows a range of measured values from 1,235 to 1,275.

— In each block and in each field the bytes shall be arranged with Byte 1, the least significant, first. Within each byte the bits shall be arranged with Bit 1, the least significant, first and Bit 8, the most significant bit, last. This order applies to the data, and to the input and output of the error-detecting and error-correcting codes, and to the cyclic redundancy characters.

— Letters and digits in parentheses represent numbers in hexadecimal notation.

— The setting of bits is denoted by ZERO or ONE.

— Numbers in binary notation and bit patterns are represented by strings of 0 and 1 shown with the most significant bit to the left.

5.2 Dimensions

The dimensions in figures 1 to 4 are nominal dimensions. Unless otherwise stated, all dimensions in figures 8 to 24 are in millimetres with a tolerance of ± 50 mm.

5.3 Names

The names of basic elements, e.g. specific fields, are written with a capital initial letter.

5.4 Acronyms

BOT	Beginning of Tape
CF1	Control Field 1
CF2	Control Field 2
CRC	Cyclic Redundancy Check (character)
CT1	Calibration Track 1
CT2	Calibration Track 2
ECC	Error-Correcting Code
EDC	Error-Detecting Code
EOD	End of Data
EOT	End of Tape
EOTR	End of Track
EW	Early Warning
RLL	Run Length Limited
SRA	Standard Reference Amplitude

6 Environment and safety

Unless otherwise stated, the conditions specified below refer to the ambient conditions in the test or computer room and not to those within the tape drive.

© ISO/IEC 2000 – All rights reserved

Copyright International Organization for Standardization
Provided by IHS under license with ISO
No reproduction or networking permitted without license from IHS
Not for Resale

6.1 Cartridge and tape testing environment

Unless otherwise stated, tests and measurements made on the cartridge and tape to check the requirements of this International Standard shall be carried out under the following conditions:

— temperature: 23 °C ± 2 °C

— relative humidity: 40 % to 60 %

— conditioning before testing: 24 h min.

6.2 Cartridge operating environment

Cartridges used for data interchange shall be capable of operating under the following conditions:

— temperature: 10 °C to 40 °C

— relative humidity: 20 % to 80 %

— wet bulb temperature: 25 °C max.

NOTE - Localized tape temperatures in excess of 49 °C may cause tape damage.

If during storage and/or transportation a cartridge has been exposed to conditions outside the above values, it shall be conditioned before use by exposure to the operating environment for a time equal to, or greater than, the time away from the operating environment up to a maximum of 24 h. There shall be no deposit of moisture on or in the cartridge.

6.3 Cartridge storage environment

Cartridges shall be stored under the following conditions:

— temperature: 16 °C to 32 °C

— relative humidity: 20 % to 80 %

The stray magnetic field at any point on the tape shall not exceed 4000 A/m. There shall be no deposit of moisture on or in the cartridge.

6.4 Safety

6.4.1 Safeness

The cartridge and its components shall not constitute any safety or health hazard when used in the intended manner, or through any foreseeable misuse in an information processing system.

6.4.2 Flammability

The cartridge and its components shall be made from materials which, if ignited from a match flame, and when so ignited do not continue to burn in a still carbon dioxide atmosphere.

6.5 Transportation

This International Standard does not specify parameters for the environment in which cartridges should be transported. Annex H gives some recommendations for transportation.

Section 2 - Requirements for the unrecorded tape

7 Mechanical and electrical requirements

7.1 Material

The tape shall consist of a base material (oriented polyethylene terephthalate film or its equivalent) coated on one surface with a strong yet flexible layer of ferromagnetic material dispersed in a suitable binder. The back surface of the tape shall be coated with a non-ferromagnetic conductive coating.

7.2 Tape length

The length of the tape from the leader splice to the hub shall be 557 m ± 5 m.

7.3 Width

The width of the tape shall be 12,649 mm ± 0,010 mm.

The width shall be measured across the tape from edge to edge when the tape is under a tension of less than 0,28 N.

© ISO/IEC 2000 – All rights reserved
Copyright International Organization for Standardization
Provided by IHS under license with ISO
No reproduction or networking permitted without license from IHS
Not for Resale

7.4 Total thickness

The total thickness of the magnetic tape at any point shall be between 8,3 µm and 9,3 µm.

7.5 Discontinuity

There shall be no discontinuities in the tape between the BOT and EOT such as those produced by tape splicing or perforations.

7.6 Longitudinal curvature

The longitudinal curvature is measured as the departure of the Reference Edge of the tape from a straight line along the longitudinal dimension of the tape in the plane of the tape surface.

7.6.1 Requirement

Any deviation of the Reference Edge from a straight line shall be continuous and shall not exceed 0,076 mm within any 229 mm length of tape.

7.6.2 Procedure

Measure at a tension of 1,39 N ± 0,28 N in a test fixture equipped with two guides spaced at 229 mm. The two guides shall be spring-loaded to position the Reference Edge of the tape against two edge control surfaces. Measure the maximum deviation of the Reference Edge of the tape from the line drawn between the two control surfaces.

7.7 Out-of-Plane distortions

All visual evidence of out-of-plane distortion shall be removed when the tape is subjected to a uniform tension of 0,6 N. Out-of-plane distortions are local deformations which cause portions of the tape to deviate from the plane of the surface of the tape. Out-of-plane distortions are most readily observed when the tape is lying on a flat surface under no tension.

7.8 Cupping

The departure across the width of the tape from a flat surface shall not exceed 2,54 mm.

Cut a 1,0 m ± 0,1 m length of tape. Condition it for a minimum of 3 h in the test environment by hanging it so that both surfaces are freely exposed to the test environment. From the centre portion of the conditioned tape cut a test piece of approximately 25 mm length. Stand the test piece on its end in a cylinder which is at least 25 mm high with an inside diameter of 13,0 mm ± 0,2 mm. With the cylinder standing on an optical comparator measure the cupping by aligning the edges of the test piece to the reticle and determining the distance from the aligned edges to the corresponding surface of the test piece at its centre.

7.9 Roughness of the coating surfaces

7.9.1 Roughness of the back coating surface

The back coating surface shall have an arithmetic average roughness R_a between 0,003 µm and 0,018 µm (ISO 1302:N 2). This measurement shall be made using a contacting stylus of radius 12,5 µm with a 20 mg load, and a 254 µm cut-off range.

7.9.2 Roughness of the magnetic coating surface

The magnetic coating surface shall have an arithmetic average roughness R_a between 0,003 µm and 0,008 µm (ISO 1302: N 3). For this measurement, the contacting stylus radius shall be 12,5 µm with a 20 mg load, and a 254 µm cut-off range.

7.10 Coating adhesion

The force required to peel any part of the coating from the tape base material shall not be less than 0,4 N.

Procedure

i. Take a test piece of the tape approximately 380 mm long and scribe a line through the recording coating across the width of the tape 125 mm from one end.

ii. Using a double-sided pressure sensitive tape, attach the full width of the test piece to a smooth metal plate, with the magnetic coating (recording surface) facing the plate, as shown in figure 1.

iii. Fold the test piece over 180°, adjacent to, and parallel with, the scribed line. Attach the metal plate and the free end of the test piece to the jaws of a universal testing machine and set the speed of the jaw separation to 254 mm per min.

iv. Note the force at which any part of the coating first separates from the base material. If this is less than 0,4 N, the tape has failed the test. If the test piece peels away from the double-sided pressure sensitive tape before the force exceeds 0,2 N, an alternative type of double-sided pressure sensitive tape shall be used.

v. Repeat i) to iv) for the back coating.

--`,,```,,,,````-`-`,,`,,`,`,,`---

© ISO/IEC 2000 – All rights reserved

Copyright International Organization for Standardization
Provided by IHS under license with ISO
No reproduction or networking permitted without license from IHS
Not for Resale

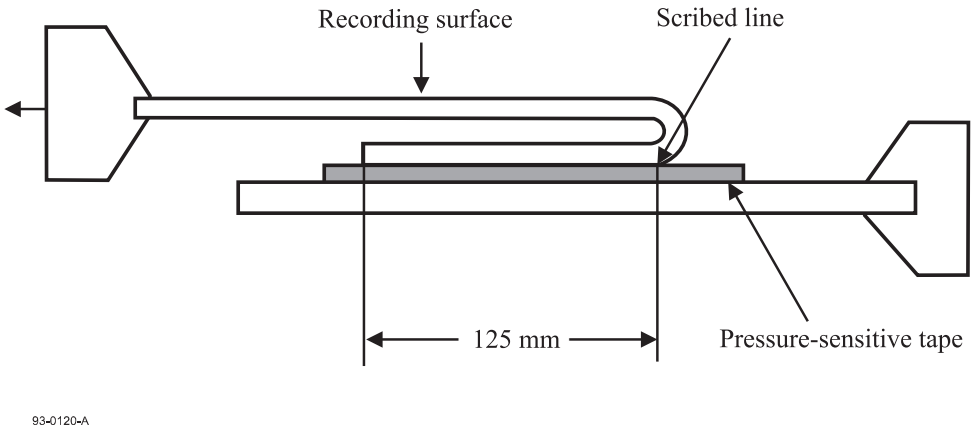

Figure 1 — Measurement of the coating adhesion

7.11 Layer-to-layer adhesion

Layer-to-layer adhesion refers to the tendency of a layer, when held in close proximity to the adjacent layer, to bond itself to an adjacent layer so that free and smooth separation of the layers is difficult.

7.11.1 Requirements

There shall be no evidence of delamination or other damage to the coatings.

7.11.2 Procedure

i. Fasten one end of a 914 mm length of tape, magnetic coating inwards, to a horizontally mounted stainless steel cylinder with a low cold-flow adhesive material.

ii. The dimensions of the cylinder shall be:

- diameter: 12,7 mm
- length: 102 mm

iii. Attach a mass of 1 000 g to the opposite end of the tape.

iv. Attach, 25,4 mm above the mass, a narrow strip of double-sided adhesive tape to the magnetic coating.

v. Slowly rotate the cylinder, so that the tape winds uniformly around it into a compact and even roll. The double-sided tape secures the end and prevents unwinding when the mass is removed.

vi. The cylinder with the tape shall then be exposed to the following temperature and humidity cycle:

Time	Temperature	RH
16 h to 18 h	54 °C	85 %
4 h	54 °C	10 % or less
1 h to 2 h	21 °C	45 %

vii. Open the end of the roll and remove the double-sided adhesive tape.

viii. Release the free end of the tape.

ix. The outer one or two wraps shall spring loose without adhesion.

x. Hold the free end of the tape and allow the cylinder to fall, thereby unwinding the tape.

xi. The tape shall show no coating delamination, except for the 51 mm of tape nearest to the cylinder.

© ISO/IEC 2000 – All rights reserved
Copyright International Organization for Standardization
Provided by IHS under license with ISO
No reproduction or networking permitted without license from IHS
Not for Resale

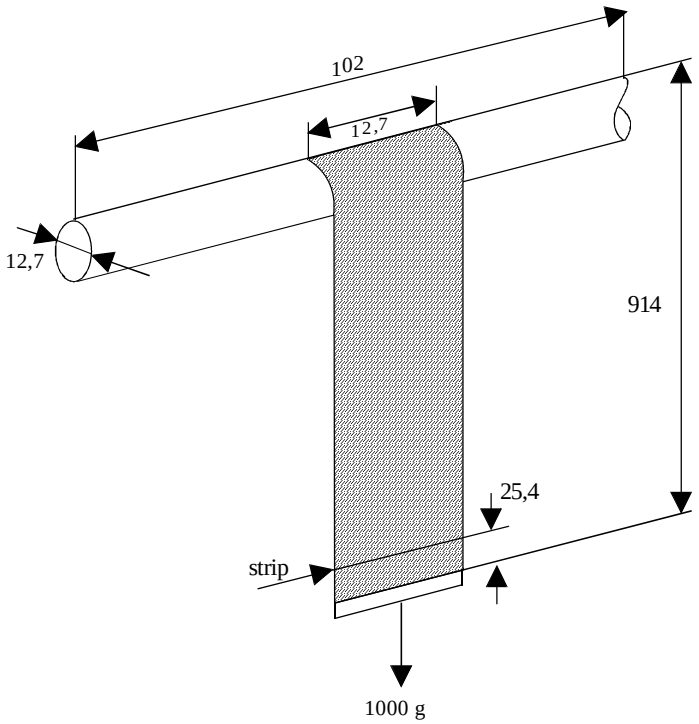

Figure 2 — Measurement of layer-to-layer adhesion

7.12 Modulus of elasticity

The modulus of elasticity (Young's modulus) is the ratio of stress to strain in the longitudinal direction.

7.12.1 Requirement

The modulus of elasticity shall be between 4 900 N/mm^2 and 11 700 N/mm^2.

7.12.2 Procedure

Clamp a test piece of tape at least 178 mm in length with an initial 102 mm separation between the jaws of a universal testing machine with a nominal crosshead speed of 3 mm per minute. Calculate the modulus using the chord of the curve between the force at 0 % and 1 % elongation.

7.13 Flexural rigidity

Flexural rigidity is the ability of the tape to resist bending in the longitudinal direction.

7.13.1 Requirement

The flexural rigidity of the tape in the longitudinal direction shall be between 2 x 10^{-7} N·mm and 8 x 10^{-7} N·mm.

7.13.2 Procedure

Calculate the flexural rigidity D from the following equation:

$$D = \frac{Et^3}{12}\left(1-\upsilon^2\right)$$

where:

E = modulus of elasticity obtained from 7.12

t = measured thickness of the tape in mm

υ = Poisson's ratio, set to 0,33

7.14 Tensile yield force

The tensile yield force required to elongate the test piece by 3 % shall not be less than 9,6 N.

7.14.1 Procedure

Use a static-weighing-constant-rate-of-grip separation tester capable of indicating the load with an accuracy of 2 %. Clamp a test piece of tape at least 178 mm long with an initial 102 mm separation between the jaws. Elongate the test piece at a rate of

© ISO/IEC 2000 – All rights reserved

Copyright International Organization for Standardization
Provided by IHS under license with ISO
No reproduction or networking permitted without license from IHS
Not for Resale

51 mm per minute until a minimum elongation of 10 % is reached. The force required to produce an elongation of 3 % is the tensile yield force.

7.15 Electrical resistance

7.15.1 Requirement

The electrical resistance of any square area of the magnetic coating shall

— be greater than 5×10^6 Ω

— not exceed 50×10^{12} Ω

The electrical resistance of any square area of the back coating shall

— not exceed 100×10^6 Ω

7.15.2 Procedure

Condition a test piece of tape in the test environment for 24 h. Position the test piece over two 24-carat gold-plated, semi-circular electrodes having a radius r = 25,4 mm and a finish of at least N4, so that the recording surface is in contact with each electrode. These electrodes shall be placed parallel to the ground and parallel to each other at a distance d = 12,7 mm between their centres. Apply a force F of 1,62 N to each end of the test piece. Apply a d.c. voltage of 100 V ± 10 V across the electrodes and measure the resulting current flow. From this value, determine the electrical resistance.

Repeat for a total of 5 positions along the test piece and average the 5 resistance readings. For the back coating repeat the procedure with the back surface in contact with the electrodes.

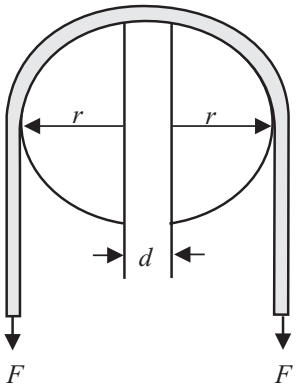

Figure 3 — Measurement of electrical resistance

When mounting the test piece, make sure that no conducting paths exist between the electrodes except that through the coating under test.

NOTE - Particular attention should be given to keeping the surfaces clean.

7.16 Inhibitor tape

This Standard does not specify parameters for assessing whether or not a tape is an inhibitor tape. However, annex J gives further information on inhibitor tapes.

7.17 Abrasivity

Tape abrasivity is the tendency of the magnetic coating to wear the magnetic heads.

7.17.1 Requirement

The depth of the wear pattern in a ferrite wear bar shall be less than 1,27 µm.

7.17.2 Procedure

A test piece 61 m in length shall be passed for 100 passes (50 cycles) over a rectangular bar of manganese zinc ferrite. The bar shall be 0,3 mm wide and its top surface shall be rounded off with a radius r_0 = 5 mm. The tape speed shall be 2,54 m/s, the tension shall be nominally 1,3 N and the wrap angle shall be 12°. The wear depth is measured with a profilometer across the width of the tape path.

NOTE - Manganese zinc ferrite should be available from Philips Ceramic Division in Saugerties (NY) under order part number 3H7.

--`,,```,,,,````-`-`,,`,,`,`,,`---
© ISO/IEC 2000 – All rights reserved
Copyright International Organization for Standardization
Provided by IHS under license with ISO
No reproduction or networking permitted without license from IHS
Not for Resale

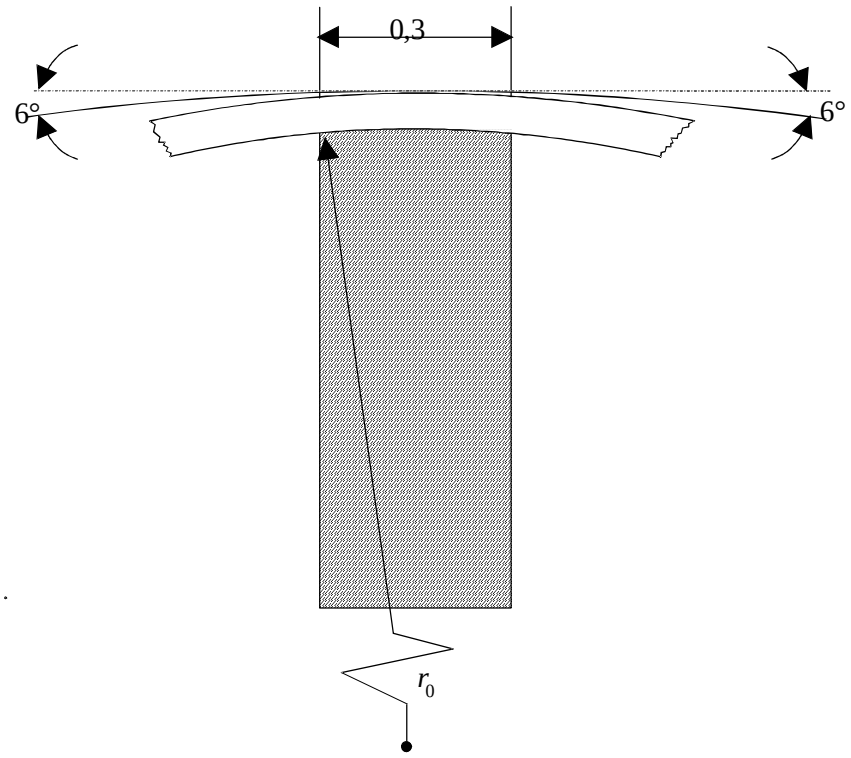

Figure 4 — Measurement of abrasivity (not to scale)

7.18 Light transmittance of the tape and the leader

The light transmittance of the tape and the leader shall be less than 5 % when measured according to the method specified in annex A.

7.19 Coefficient of dynamic friction

The coefficient of dynamic friction is measured between the surfaces of the tape, and calcium titanate ceramic.

7.19.1 Requirements

Between the magnetic surface and the back surface:	greater than 0,15
Between the magnetic surface and calcium titanate ceramic:	0,05 to 0,35
Between the back surface and calcium titanate ceramic:	0,05 to 0,20

7.19.2 Procedure for the measurement of the friction between the magnetic surface and the back surface

i. Wrap a first piece of tape around a calcium titanate ceramic cylinder (R_a = 0,05 µm) of diameter 25,4 mm and wrap it with a total wrap angle of more than 90° with the back surface outwards.

ii. Wrap a second test piece, with the magnetic surface inwards, around the first test piece with a total wrap angle of 90°.

iii. Exert on one end of the outer test piece a force of F_1 = 0,64 N.

iv. Attach the other end to a force gauge mounted on a linear slide.

v. Drive the slide at a speed of 1 mm/s, measure the force F_2 required.

vi. Calculate the coefficient of dynamic friction γ from the equation

$$\gamma = \frac{1}{\phi} \ln\left(\frac{F_2}{F_1}\right)$$

where ϕ is the value of the wrap angle in radians.

--`,,```,,,,````-`-`,,`,,`,`,,`---

© ISO/IEC 2000 – All rights reserved

Copyright International Organization for Standardization
Provided by IHS under license with ISO
No reproduction or networking permitted without license from IHS
Not for Resale

7.19.3 Procedure for the measurement of the friction between the magnetic surface or the back surface and calcium titanate ceramic

i. Wrap a piece of tape around a calcium titanate ceramic cylinder (R_a = 0,05 µm) of diameter 25,4 mm and wrap it with a total wrap angle of 90° with the magnetic surface or the back surface, as appropriate, inwards.

ii. Exert on one end of the test piece a force of F_1 = 0,64 N.

iii. Attach the other end to a force gauge mounted on a linear slide.

iv. Drive the slide at a speed of 1 mm/s, measure the force F_2 required.

v. Calculate the coefficient of dynamic friction γ from the equation

$$\gamma = \frac{1}{\phi} \ln\left(\frac{F_2}{F_1}\right)$$

where ϕ is the value of the wrap angle in radians.

NOTE - Calcium titanate ceramic should be available from Philips Ceramic Division in Saugerties (NY) under order part Ca Ti.

8 Magnetic recording characteristics

The magnetic recording characteristics shall be defined by testing the requirements given below.

When performing the tests, the output or resultant signal shall be measured on the same relative pass for both a tape calibrated to the Master Standard Reference Tape and the tape under test (read-while-write, or on equipment without read-while-write capability, on the first forward-read-pass) on the same equipment.

The following conditions shall apply to the testing of all magnetic recording characteristics, unless otherwise noted.

— Tape condition: a.c. erased to 2 % or less of the Average Signal Amplitude

— Tape speed: 4,26 m/s ± 0,05 m/s

— Read track: within the written track

— Gap alignment: the read gap and the write gap to be parallel within 38,1 µm

— Write gap length: 0,64 µm ± 0,18 µm

— Write gap width: 0,216 mm ± 0,010 mm

— Read gap length: 0,18 µm ± 0,05 µm

— Read gap width: 39,4 µm ± 5,0 µm

— Tape tension: 0,79 N ± 0,08 N

— Recording current: Test Recording Current

— Physical recording densities: $2f$ = 2 578 ftpmm ± 44 ftpmm, corresponding to 5,5 MHz ± 2 %
$1f$ = 1 289 ftpmm ± 22 ftpmm, corresponding to 2,75 MHz ± 2 %

— Bandwidth of the read amplifier: 10,0 MHz

8.1 Typical Field

The Typical Field shall be between 75 % and 125 % of the Reference Field.

Traceability to the Reference Field is provided by the calibration factors supplied with each Secondary Standard Reference Tape.

© ISO/IEC 2000 – All rights reserved
Copyright International Organization for Standardization
Provided by IHS under license with ISO
No reproduction or networking permitted without license from IHS
Not for Resale

8.2 Signal amplitude

The Average Signal Amplitude shall be between 85 % and 115 % of the SRA.

Traceability to the SRA is provided by the calibration factors supplied with each Secondary Standard Reference Tape.

8.3 Resolution

The ratio of the average signal amplitude at the physical recording density of 2 578 ftpmm to that at the physical recording density of 1 289 ftpmm shall be between 90 % and 120 % of the same ratio for the Master Standard Reference Tape.

Traceability to the resolution of the Master Standard Reference Tape is provided by the calibration factors supplied with each Secondary Standard Reference Tape.

8.4 Overwrite

Overwrite is the ratio of the residual signal of the average signal amplitude recorded at 1 289 ftpmm after being overwritten at 2 578 ftpmm to the average signal amplitude of the 1 289 ftpmm signal.

8.4.1 Requirement

The overwrite for the tape shall be less than 110 % of the overwrite for the Master Standard Reference Tape.

Traceability to the overwrite of the Master Standard Reference Tape is provided by the calibration factors supplied with each Secondary Standard Reference Tape.

8.5 Peak shift

Peak shift is measured as the time displacement from nominal of the ONEs transitions in the recorded pattern 110110110...with a bit cell length of 0,129 µm.

8.5.1 Requirement

For a peak shift ratio of n % for the Master Standard Reference Tape, the measured peak shift ratio shall be between (n-2) % and (n+2) %.

Traceability to the peak shift ratio of the Master Standard Reference Tape is provided by the calibration factors supplied with each Secondary Standard Reference Tape.

8.5.2 Procedure

The time interval measurements shall be averaged over 250 ONE-ONE-ZERO patterns taken at a sampling rate of 96 times 2f.

The time between adjacent peaks in the ONE-ONE interval is denoted as t_1. The time between the last ONE in the ONE-ONE interval to the last ONE in the following ONE-ONE interval is denoted as t_0.

$$\text{Peak shift} = \left(\frac{3t_1 - t_0}{2t_0} \right) 100\ \%$$

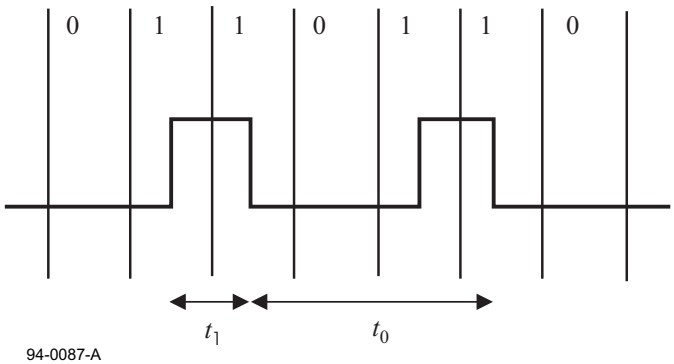

Figure 5 — Measurement of peak shift

© ISO/IEC 2000 – All rights reserved

Copyright International Organization for Standardization
Provided by IHS under license with ISO
No reproduction or networking permitted without license from IHS
Not for Resale

9 Tape quality

9.1 Missing pulses

A missing pulse is a loss of read signal amplitude. When a base-to-peak read signal amplitude is less than 35 % of half the Average Signal Amplitude (see 8.2) for the preceding 25,4 mm of track, then these 25,4 mm constitute a missing pulse. This measurement shall be carried out in steps of 25,4 mm of track.

9.1.1 Requirement

The average missing pulse rate shall be less than 20 missing pulses for any recorded length of track of 100 m.

9.2 Missing pulse zone

A missing pulse zone is a sequence of missing pulses exceeding 100 mm.

9.2.1 Requirement

Missing pulse zones shall not occur.

9.3 Tape durability

This International Standard does not specify parameters for assessing tape durability. However, a recommended procedure is described in annex K.

Section 3 - Mechanical specifications of the tape cartridge

10 General

The tape cartridge shall consist of the following elements

— a case
— a reel for the magnetic tape
— a locking mechanism for the reel
— a magnetic tape wound on the hub of the reel
— a write-inhibit mechanism
— a tape leader

Dimensional characteristics are specified for those parameters deemed mandatory for interchange and compatible use of the cartridge. Where there is freedom of design, only the functional characteristics of the elements described are indicated.

Where they are purely descriptive the dimensions are referred to three reference planes A, B, and C forming a geometrical trihedral. Where the dimensions are related to the position of the cartridge in the drive, they may be referenced to another surface of the cartridge.

In the enclosed drawings a typical implementation is represented.

Figure 6 shows a general view of the cartridge.
Figure 7 shows the reference planes A, B, C.
Figure 8 shows the bottom side of the cartridge.
Figure 9 shows the right side of the cartridge.
Figure 10 shows the back side of the cartridge.
Figure 11 shows the left side of the cartridge.
Figure 12 shows a partial cross-section of the cartridge in locked position.
Figure 13 shows a partial cross-section of the cartridge in operating position.
Figure 14 shows the leader-to-tape connection.
Figure 15 shows the splice of the leader-to-tape connection.
Figure 16 shows the leader.
Figure 17 shows the front side of the cartridge.
Figure 18 shows the back side of the cartridge with partial cut.
Figure 19 shows the top side of the cartridge with partial cut and the door open.

Figure 6 shows a general view of the cartridge. When it is not in the operating position, the reel of magnetic tape is locked and cannot rotate. When loaded into the drive, the back side is introduced first and the front side remains visible during operation. During the loading process the tape reel is unlocked and the position of the cartridge within the drive is fixed by elements of the drive engaging with corresponding elements of the case.

© ISO/IEC 2000 – All rights reserved
Copyright International Organization for Standardization
Provided by IHS under license with ISO
No reproduction or networking permitted without license from IHS
Not for Resale

The position of the case relative to the reference planes A, B and C is shown in figure 7. The top side lies in reference plane A, the right side lies in reference plane B and the back side lies in reference plane C.

10.1 Bottom side and right side (figures 8 and 9)

The overall dimensions of the cartridge shall be

l_1 = 105,79 mm ± 0,20 mm

l_2 = 105,41 mm ± 0,20 mm

l_3 = 25,40 mm ± 0,25 mm

The bottom side shall have a window the dimensions and the position of which shall be defined by

l_4 = 6,25 mm ± 0,10 mm

l_5 = 4,85 mm ± 0,05 mm

l_6 = 84,07 mm ± 0,20 mm

l_7 = 3,81 mm ± 0,05 mm

This window allows one of the fingers of the drive to penetrate into the case for partially unlocking the reel of tape (see 10.6).

A positioning hole on the bottom side and a guiding notch, followed by a positioning notch in the right side determine the position of the cartridge in the drive.

The dimensions and the position of the positioning hole shall be defined by

l_8 = 21,59 mm ± 0,10 mm

l_9 = 4,45 mm $^{+\,0,13\ \text{mm}}_{-\,0,00\ \text{mm}}$

l_{10} = 2,79 mm ± 0,05 mm

l_{11} = 44,58 mm ± 0,20 mm

The dimensions and the position of the positioning notch shall be defined by

l_{12} = 5,56 mm ± 0,10 mm

l_{13} = 33,30 mm ± 0,20 mm

l_{14} = 5,08 mm ± 0,10 mm

h_1 = 9,02 mm ± 0,10 mm

a_1 = 14° ± 30'

The dimensions and the position of the guiding notch shall be defined by

l_{15} = 8,59 mm ± 0,10 mm

l_{16} = 24,64 mm ± 0,10 mm

l_{17} = 1,50 mm ± 0,05 mm

a_2 = 45° ± 30'

a_3 = 14° ± 30'

The right side shall have an indicator connected to the manually operable write-inhibit switch described in 10.5. The dimensions and the position of this indicator shall be defined by

l_{18} = 8,64 mm ± 0,10 mm

l_{19} = 5,08 mm ± 0,10 mm

© ISO/IEC 2000 – All rights reserved

Copyright International Organization for Standardization
Provided by IHS under license with ISO
No reproduction or networking permitted without license from IHS
Not for Resale

l_{20} = 86,11 mm ± 0,20 mm

l_{21} = 10,16 mm ± 0,10 mm

Writing is enabled when the surface of the indicator is substantially flush with the cartridge wall. When this surface is recessed by at least 5,1 mm writing is inhibited. When a force of up to 1,0 N is exerted perpendicularly on the centre of the surface of the indicator, it shall not recede by more than 0,5 mm from reference plane B.

10.2 Back side and left side (figures 10 and 11)

The back side shall have a window the dimensions and position of which shall be

l_{22} = 8,76 mm ± 0,10 mm

l_{23} = 4,25 mm ± 0,10 mm

l_{24} = 4,45 mm ± 0,10 mm

l_{25} = 8,89 mm ± 0,10 mm

This window allows a further finger of the drive to penetrate into the case to finally unlock the reel of tape (see also 10.6).

A door shall be rotatably mounted at the corner of the back side and the left side. It is described in 10.6.

The left side shall have two edges the positions and lengths of which shall be

l_{26} = 61,47 mm ± 0,20 mm

$l_{27} = 9{,}65\ \text{mm}\ {}^{+\,0{,}13\ \text{mm}}_{-\,0{,}00\ \text{mm}}$

l_{71} = 41,9 mm ± 0,20 mm

$l_{72} = 6{,}18\ \text{mm}\ {}^{+\,0{,}18\ \text{mm}}_{-\,0{,}00\ \text{mm}}$

10.3 Tape reel (figures 8, 12 and 13)

The bottom side of the case shall have a circular window through which the drive spindle contacts the hub of the reel and transmits torque. The diameter of this window shall be

d_1 = 35,05 mm ± 0,08 mm

The position of its centre shall be defined by

l_{69} = 50,42 mm ± 0,31 mm

l_{70} = 52,83 mm ± 0,10 mm

The interface between the spindle and the hub is provided by 48 evenly spaced teeth in the hub. In the non-operating position, the surface of the hub shall be recessed from the outside surface of the case by

l_{28} = 0,38 mm ± 0,05 mm

The tooth profile consists of straight flanks. The envelope dimensions of the teeth shall be

d_2 = 23,88 mm ± 0,13 mm

d_3 = 29,21 mm ± 0,13 mm

d_4 = 34,29 mm ± 0,13 mm

a_4 = 22° ± 30'

a_5 = 15° ± 30'

where d_3 is the pitch diameter of the teeth.

© ISO/IEC 2000 – All rights reserved
Copyright International Organization for Standardization
Provided by IHS under license with ISO
No reproduction or networking permitted without license from IHS
Not for Resale

In the operating position the surface of the hub shall be at a distance

l_{29}= 23,55 mm ± 0,10 mm

from reference plane A.

10.4 Tape leader (figures 14, 15 and 16)

The positions of the BOT and EOT relative to the leader/tape connection and to the physical end of the tape shall be as follows.

The BOT shall be at a distance

l_{30}= 13 260 mm ± 150 mm

from the leader/tape connection.

The EOT shall be at a distance

l_{31}= 6 096 mm ± 150 mm

from the physical end of the tape, which is fixed to the hub of the reel. Both the BOT hole and EOT hole shall have a diameter

d_5 = 4,78 mm ± 0,10 mm

Figure 15 shows the relative positions of the tape, the leader and the splice tape. They shall be defined by

l_{32}= 11,81 mm min. / 20,32 mm max.

l_{33}= 0,25 mm max.

l_{34}= 0,41 mm max.

l_{35}= 0,00 mm min.

l_{36}= 0,20 mm max.

Dimensions l_{34}, l_{35} and l_{36} are related to, and depend on, each other. Dimension l_{35} expresses the requirement that the splice tape shall in no case extend beyond the edges of either the tape or the leader.

There shall be no yield of the splice when a force of 22,2 N max. is applied in longitudinal direction across the splice.

Figure 16 shows the dimensions of the leader which shall be

l_{37} = 12,65 mm $^{+\ 0,00\ mm}_{-\ 0,10\ mm}$

l_{38}= 309,63 mm ± 0,30 mm

l_{39}= 130,96 mm ± 0,10 mm

l_{40}= 22,35 mm ± 0,10 mm

l_{41}= 8,13 mm ± 0,10 mm

l_{42}= 3,05 mm ± 0,05 mm

l_{43}= 2,95 mm ± 0,05 mm

l_{44} = 2,79 mm $^{+\ 0,13\ mm}_{-\ 0,00\ mm}$

l_{45}= 18,54 mm ± 0,10 mm

l_{46}= 8,69 mm ± 0,10 mm

l_{47}= 5,89 mm ± 0,10 mm

l_{48}= 6,33 mm ± 0,10 mm

© ISO/IEC 2000 – All rights reserved

Copyright International Organization for Standardization
Provided by IHS under license with ISO
No reproduction or networking permitted without license from IHS
Not for Resale

l_{49}= 3,40 mm ± 0,05 mm

l_{50}= 3,73 mm ± 0,05 mm

l_{51}= 5,00 mm ± 0,05 mm

l_{52}= 7,47 mm ± 0,10 mm

l_{53}= 6,86 mm ± 0,10 mm

l_{54}= 8,15 mm ± 0,10 mm

l_{55}= 2,24 mm ± 0,10 mm

l_{56}= 3,40 mm ± 0,05 mm

l_{57}= 6,325 mm ± 0,001 mm

r_1 = 4,98 mm ± 0,05 mm

r_2 = 15,01 mm ± 0,10 mm

r_3 = 10,21 mm ± 0,10 mm

r_4 = 3,40 mm ± 0,05 mm

r_5 = 4,00 mm ± 0,01 mm

a_6 = 5° ± 30'

a_7 = 15° ± 30'

a_8 = 60° ± 30'

The design of the leader is explained in 10.6.

10.5 Front side (figure 17)

The manually operable write-inhibit switch shall have the dimensions

l_{58} = 18,29 mm $^{+\ 0,00\ \text{mm}}_{-\ 0,20\ \text{mm}}$

l_{59}= 26,60 mm ± 0,20 mm

This switch shall have a detent at its two end positions with a force suitable to meet the requirement of the write-inhibit indicator in the right side of the case with which it shall be connected. The actual force depends on the design of the connection.

The front side shall have a slot intended for labels. The dimensions of this slot shall be

l_{60} = 54,40 mm ± 0,20 mm

l_{61} = 18,40 mm ± 0,20 mm

l_{62} = 21,40 mm ± 0,20 mm

l_{63} = 0,76 mm ± 0,10 mm

10.6 Operation of the cartridge (figures 18 and 19)

When the cartridge is introduced into the drive, the sequence of events is as follows.

i. The door shall have a movable lock the lower edge of which shall be at a distance

l_{64} = 14,50 mm ± 0,20 mm

© ISO/IEC 2000 – All rights reserved
Copyright International Organization for Standardization
Provided by IHS under license with ISO
No reproduction or networking permitted without license from IHS
Not for Resale

from reference plane A. A cam of the drive raises this lock in order to unlock the door which shall be unlocked when the edge is raised by 1,0 mm min.

The door is then opened 90° by the drive. It shall be able to rotate further up to 105°. In the open position of the door the whole back side shall be accessible except the part limited by

l_{65} = 35,79 mm ± 0,20 mm.

In this position the space along the left side that is delimited by

l_{66} = 3,40 mm ± 0,05 mm

shall be free for a drive element to contact the edge defined by l_{26} and l_{27} (see figure 11).

ii. A finger of the drive penetrates into the case through the window defined by l_{22} to l_{25} (see figure 10) to partially unlock the reel. The corresponding part of the locking mechanism shall not require a penetration other than 8 mm ± 1 mm nor a force other than 3,3 N ± 0,4 N to be actuated.

iii. When the cartridge has been completely introduced into the drive, it is held in position by elements of the drive engaging the positioning notch of the right side (figures 8 and 9) and the positioning hole in the bottom side (figure 8).

A second finger of the drive penetrates through the window of the bottom side defined by l_4 to l_7 and completely unlocks the reel. The requirements for penetration and force are the same as specified in ii) for the first finger.

iv. The drive spindle engages the teeth of the hub and raises the reel into the operating position (see figure 13). The force with which the tape reel is held against the spindle shall be 6,0 N ± 0,5 N.

v. In this final position of the cartridge within the drive, the tip of the leader shall be positioned as specified by

l_{67} = 4,42 mm ± 1,52 mm

l_{68} = 49,28 mm ± 1,27 mm

as shown in figures 18 and 19.

vi. When the cartridge is within the drive in the operating position (figures 13 and 19), the tape is pulled out of the cartridge by a drive leader attached to the hub of a reel within the drive. The tip of this drive leader is designed so as to match the shape of the main hole of the tape leader and to engage it. This drive leader has a hole corresponding to that shown in detail B of figure 16. Dimensions and positions of these two holes are such that when the tape leader is wound onto the hub of the drive reel the connection of the two leaders lies between the two holes.

The tape leader has a stop edge the longitudinal position of which relative to the end of the main hole is specified by l_{40} (figure 16). The case shall have an abutment against which this stop edge comes to rest when the tape is completely pulled back into the cartridge. This abutment, together with a case element engaging the slot of the tape leader shall be such that the dimensional requirements for l_{67} and l_{68} are met.

The tape leader and the abutment shall withstand the impact of having to stop the full reel when the tape leader is retracted with a speed in the range 152 mm/s to 178 mm/s. Until the reel is fully locked, i.e. until the cartridge is ejected from the drive, the stop edge shall be held against the abutment with a force in the range 1,1 N to 1,7 N.

10.7 Tape winding

The tape shall be wound on the hub with the magnetic coating facing inwards, so that during forward read/write operation the tape is unwound from the cartridge reel in a counterclockwise direction when viewed from the top of the cartridge.

The tape shall be wound with a tension of 1,11 N ± 0,28 N.

10.8 Moment of inertia

A full reel of tape shall have a diameter between 87,45 mm and 91,19 mm.

The moment of inertia shall be:

— Full reel: between 131×10^{-6} kg·m^2 and 160×10^{-6} kg·m^2

— Empty reel: between 19×10^{-6} kg·m^2 and 23×10^{-6} kg·m^2

© ISO/IEC 2000 – All rights reserved

Copyright International Organization for Standardization
Provided by IHS under license with ISO
No reproduction or networking permitted without license from IHS
Not for Resale

10.9 Material

The cartridge can be made of any material as long as the requirements of this International Standard are met. For example, the hub and the case could be made of 10 % glass-filled polycarbonate. A typical wall thickness is 1,5 mm.

The tape leader shall be made of a non-translucent material, for instance pigmented polyethylene terephthalate.

--`,,```,,,,````-`-`,,`,,`,`,,`---
© ISO/IEC 2000 – All rights reserved
Copyright International Organization for Standardization
Provided by IHS under license with ISO
No reproduction or networking permitted without license from IHS
Not for Resale

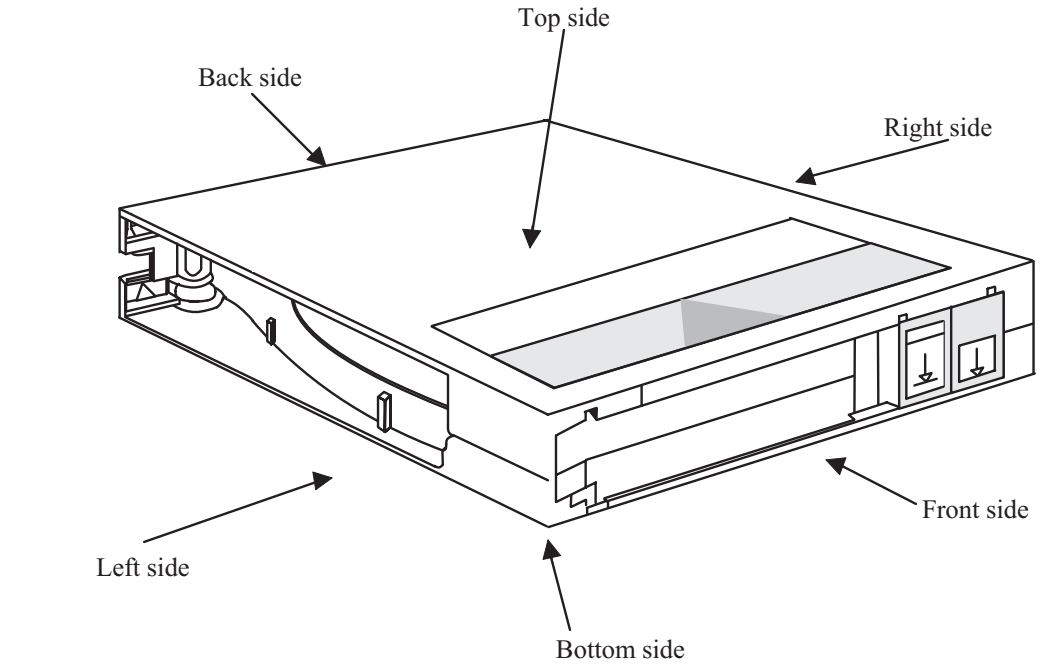

Figure 6 — General view

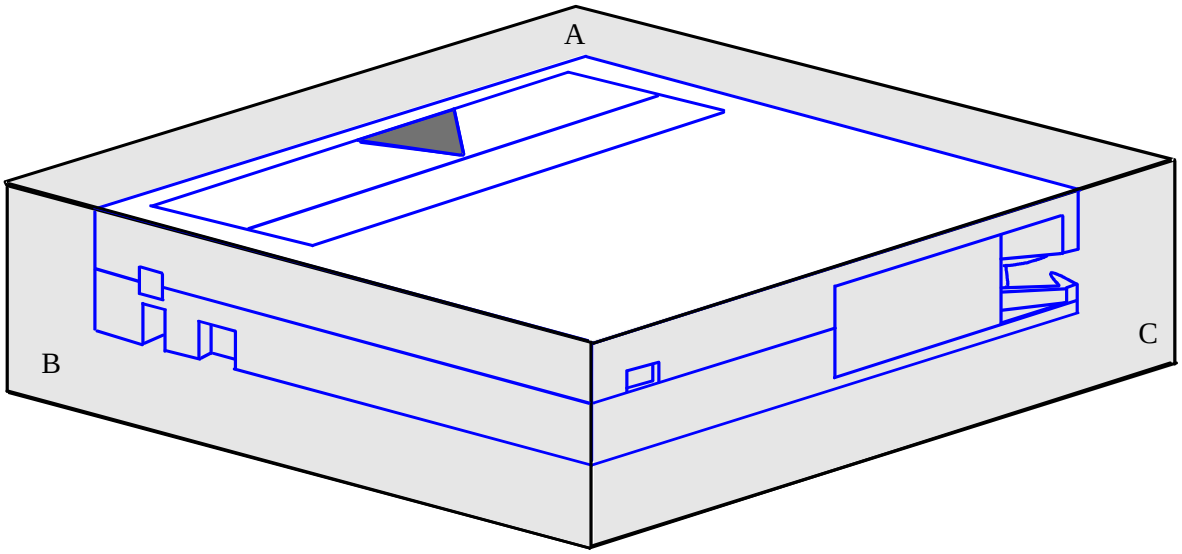

Figure 7 — Reference planes

© ISO/IEC 2000 – All rights reserved
Copyright International Organization for Standardization
Provided by IHS under license with ISO
No reproduction or networking permitted without license from IHS
Not for Resale

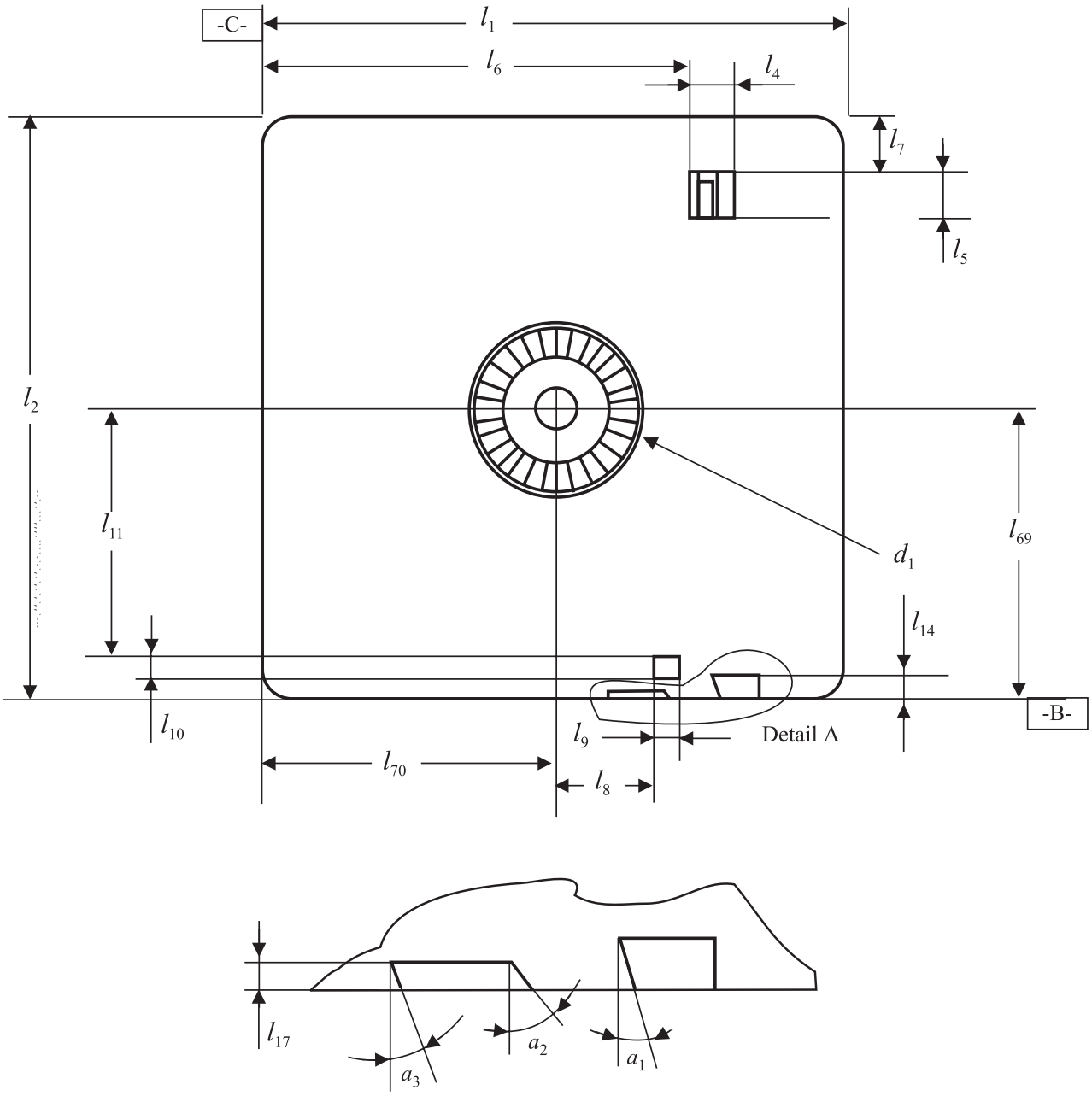

Figure 8 — Bottom side

© ISO/IEC 2000 – All rights reserved
Copyright International Organization for Standardization
Provided by IHS under license with ISO
No reproduction or networking permitted without license from IHS
Not for Resale

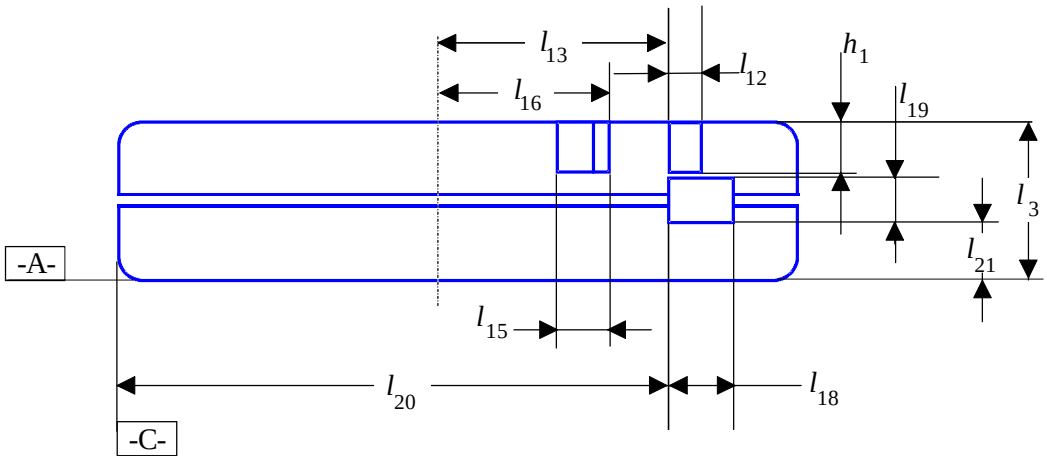

Figure 9 — Right side

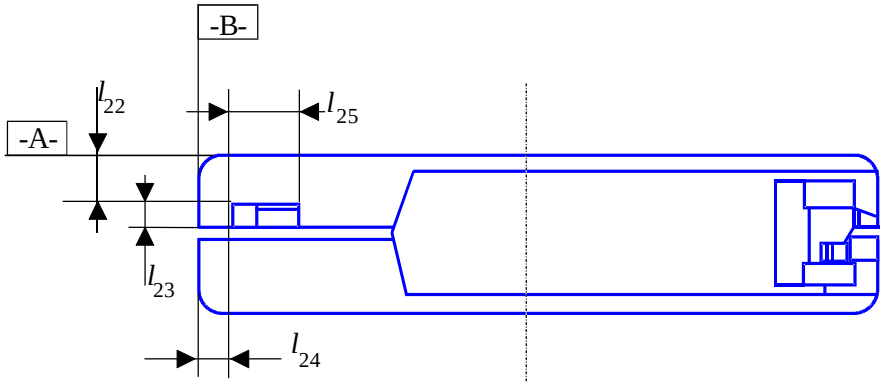

Figure 10 — Back side

© ISO/IEC 2000 – All rights reserved

Copyright International Organization for Standardization
Provided by IHS under license with ISO
No reproduction or networking permitted without license from IHS
Not for Resale

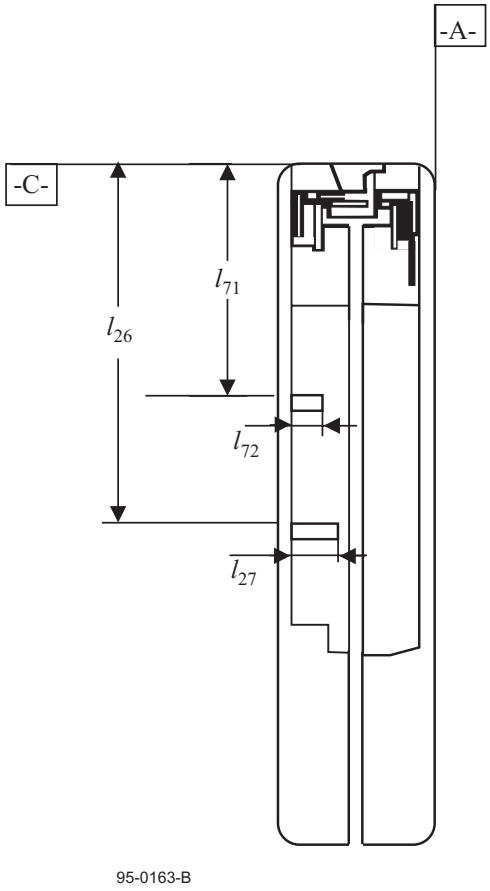

Figure 11 — Left side

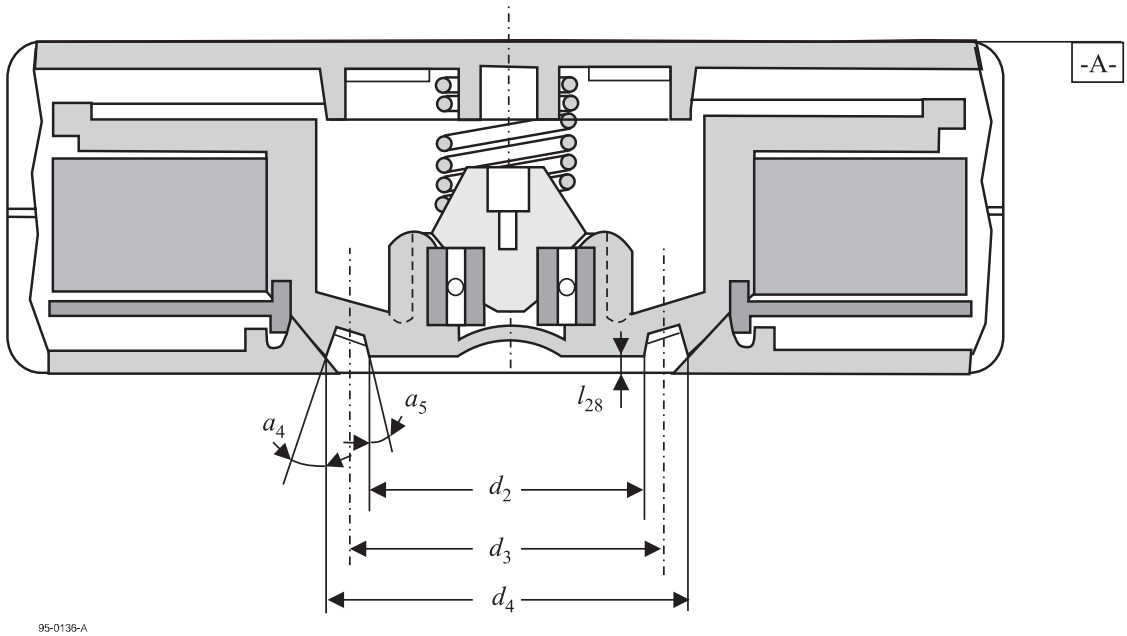

Figure 12 — Cross section, non-operating position

© ISO/IEC 2000 – All rights reserved
Copyright International Organization for Standardization
Provided by IHS under license with ISO
No reproduction or networking permitted without license from IHS
Not for Resale

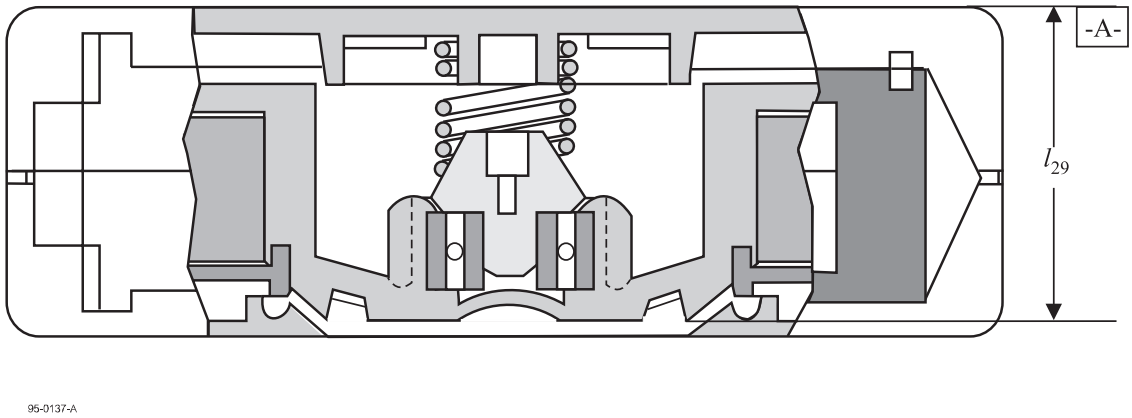

Figure 13 — Cross section, operating position

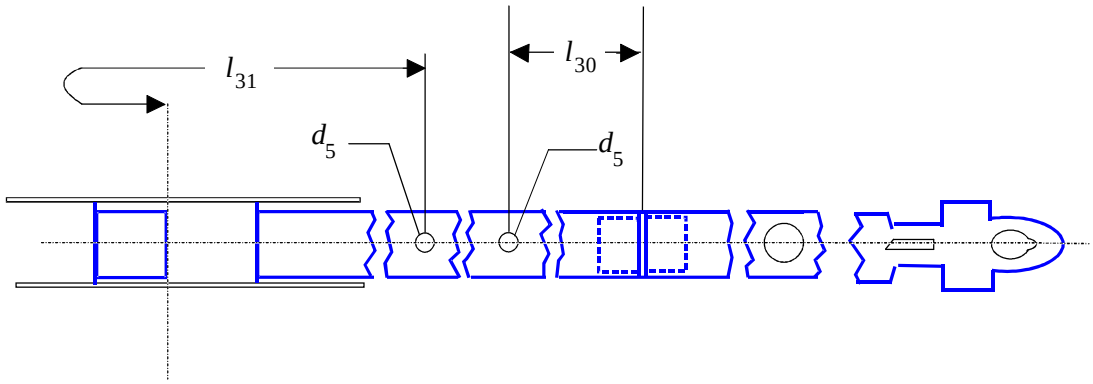

Figure 14 — Leader/tape connection

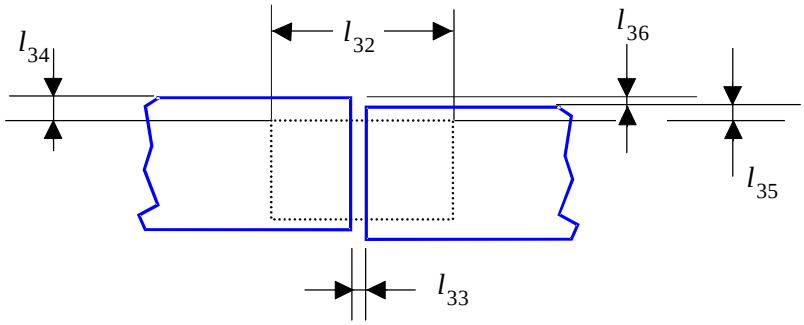

Figure 15 — Position of the splice tape

© ISO/IEC 2000 – All rights reserved
Copyright International Organization for Standardization
Provided by IHS under license with ISO
No reproduction or networking permitted without license from IHS
Not for Resale

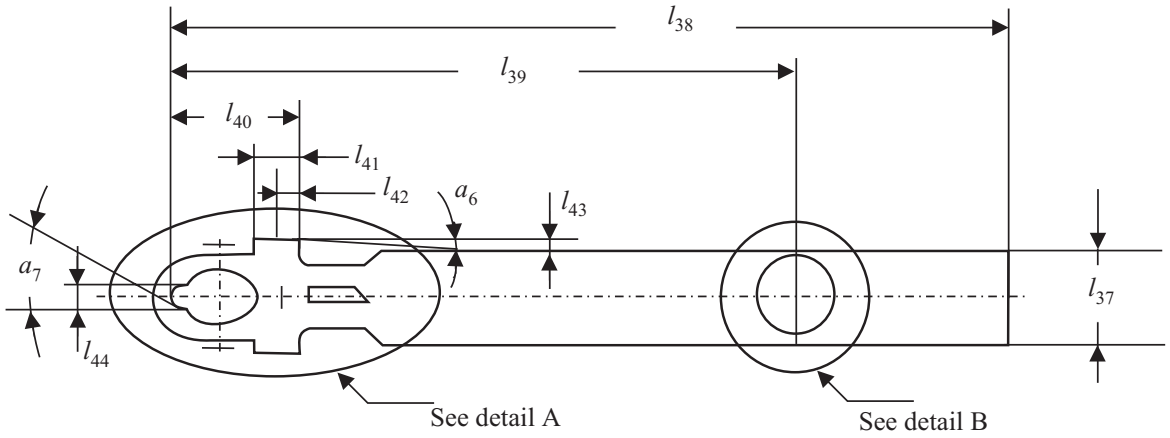

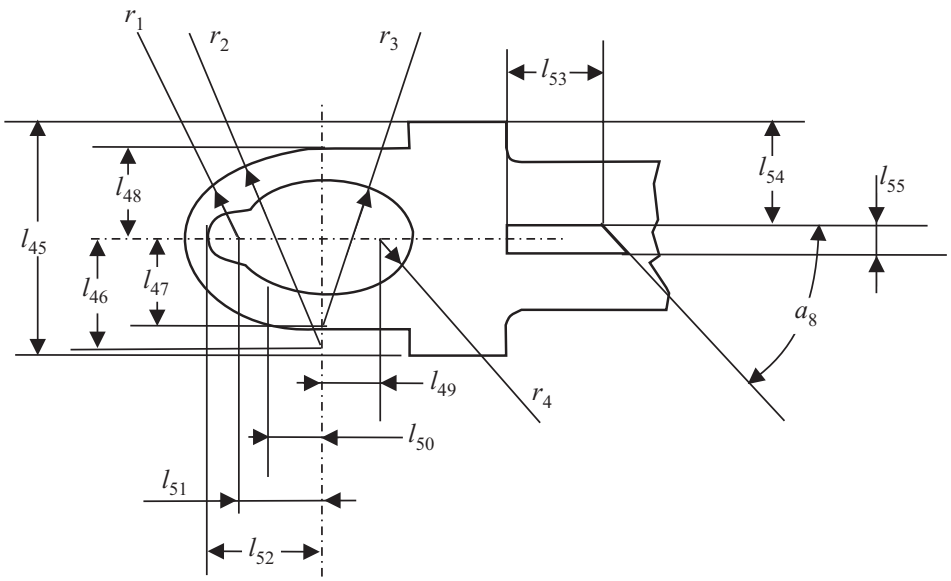

Detail A

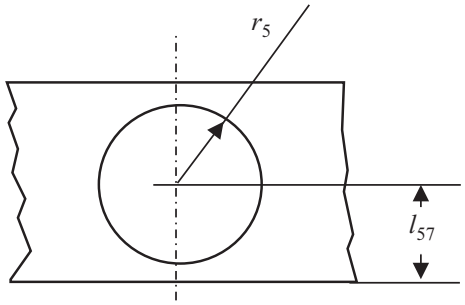

Detail B

95-0166-A

Figure 16 — Tape leader

© ISO/IEC 2000 – All rights reserved
Copyright International Organization for Standardization
Provided by IHS under license with ISO
No reproduction or networking permitted without license from IHS
Not for Resale

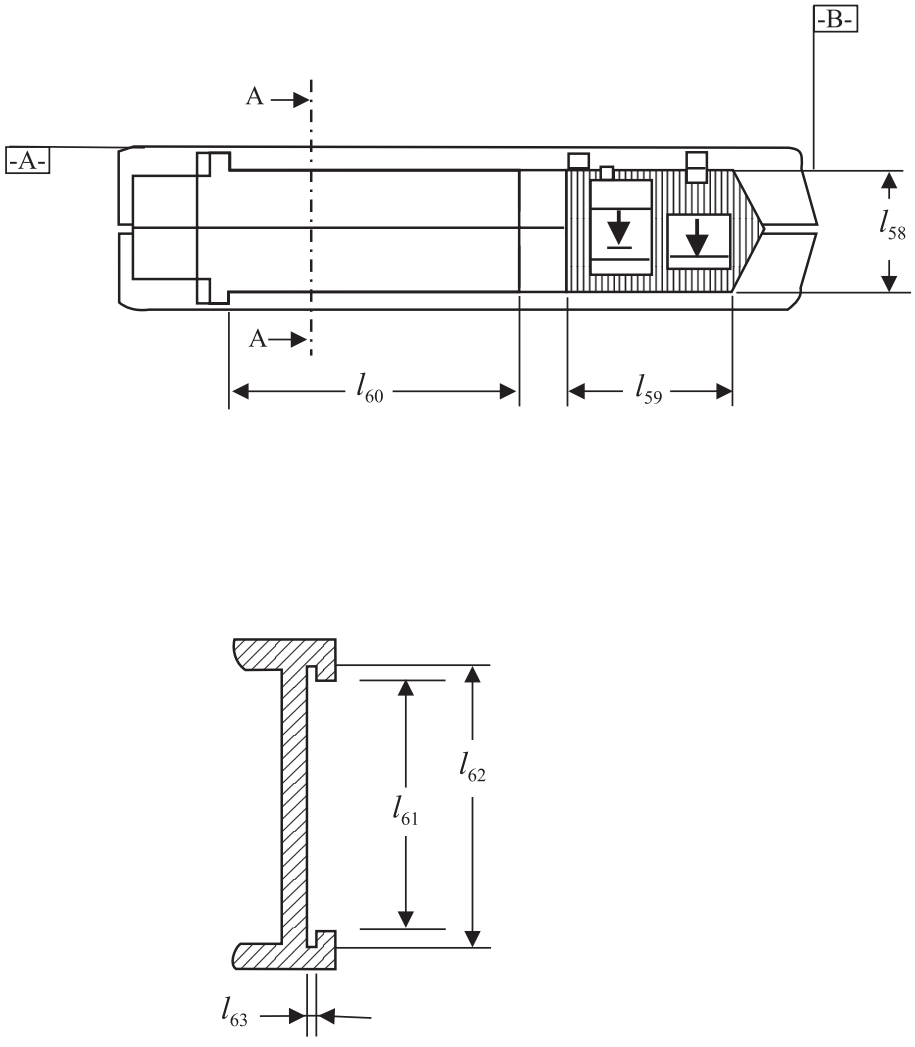

Figure 17 — Front side

© ISO/IEC 2000 – All rights reserved
Copyright International Organization for Standardization
Provided by IHS under license with ISO
No reproduction or networking permitted without license from IHS
Not for Resale

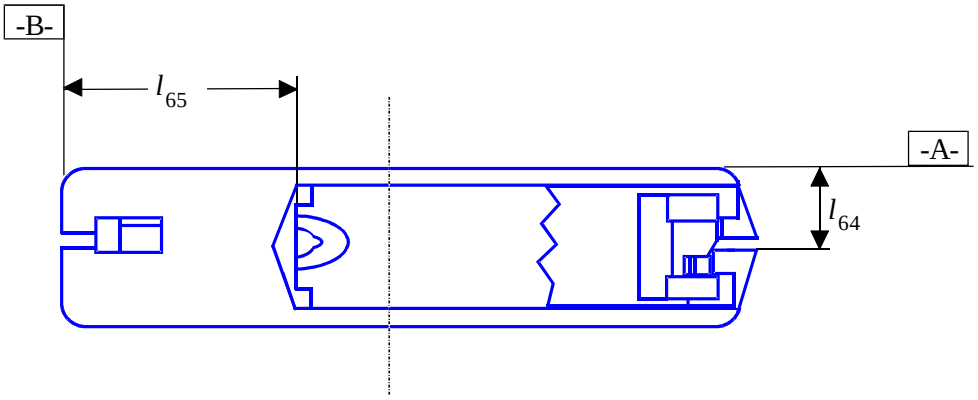

Figure 18 — Back side, position of the door lock

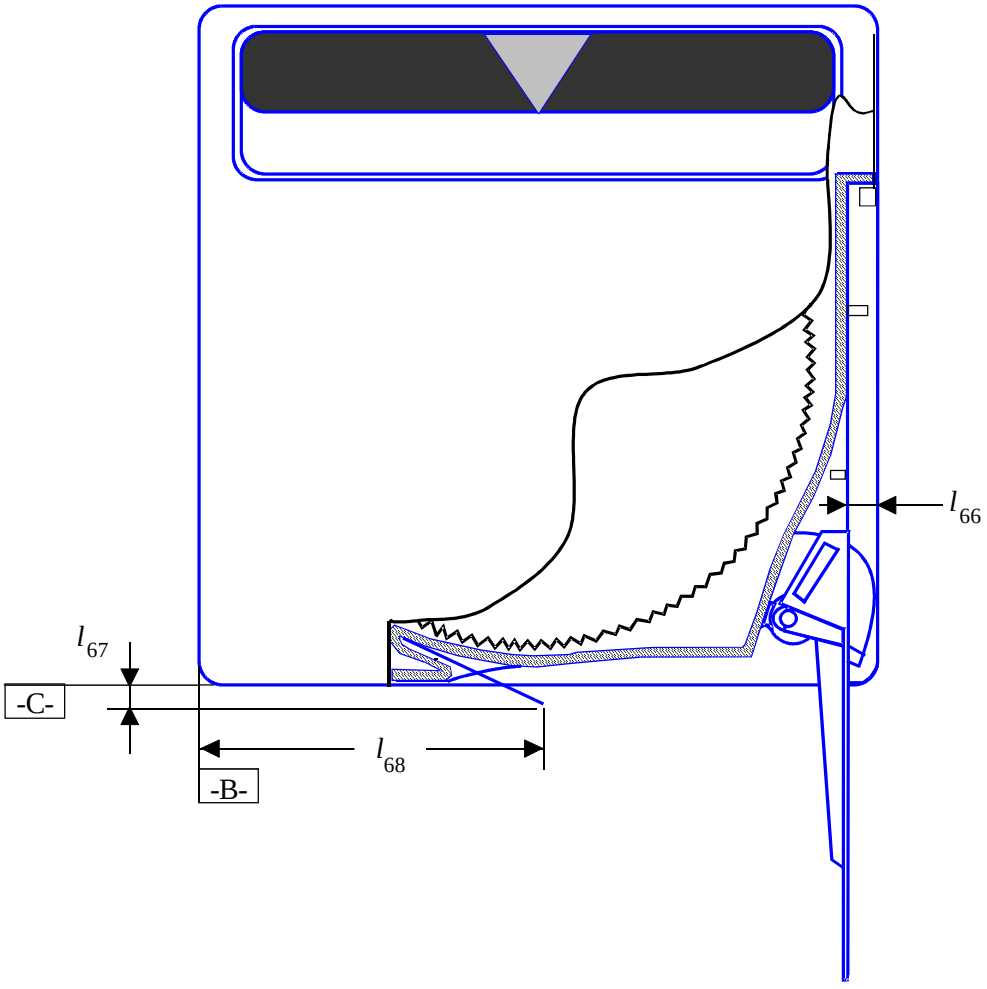

Figure 19 — Position of the leader tip

© ISO/IEC 2000 – All rights reserved
Copyright International Organization for Standardization
Provided by IHS under license with ISO
No reproduction or networking permitted without license from IHS
Not for Resale

Section 4 - Requirements for an interchanged tape

11 Method of recording

The method of recording shall be the 2-7 Run Length Limited (2-7 RLL) method in which

— a ONE is represented by a flux transition at the centre of a bit cell,

— a ZERO is represented by no flux transition in the bit cell,

— the number of ZEROs between two successive ONEs is at least two and at most seven.

Table 1 indicates how the input bit series shall be converted into Channel bits series to meet the requirements of the recording method.

Table 1 — Code conversion

Input bits series	Channel bits series
10	0100
11	1000
000	000100
010	100100
011	001000
0010	00100100
0011	00001000

11.1 Physical recording density

The highest physical recording density shall be 2 578 ftpmm.

11.2 Channel bit cell length

The corresponding nominal Channel bit cell length is 0,129 µm.

11.2.1 Average Channel bit cell length

The average Channel bit cell length is the overall length of *n* Channel bit cells divided by *n*.

11.2.2 Long-term average Channel bit cell length

The long-term average Channel bit cell length shall be the average Channel bit cell length taken over a minimum of 1 000 000 Channel bit cells. It shall be within 2,25 % of the nominal Channel bit cell length.

11.2.3 Short-term average Channel bit cell length

The short-term average Channel bit cell length shall be the average taken over 10 Channel bit cells. It shall be within 5 % of the nominal Channel bit cell length.

11.3 Flux transition spacing

The spacings between flux transitions are influenced by the reading and writing processes, the recorded pattern (pulse crowding effect) and other factors.

For a peak shift ratio of *n* for the Master Standard Reference Tape, the measured peak shift ratio shall be between (*n*-3)% and (*n*+3)%, when measured according to 8.5.

Traceability to the peak shift ratio of the Master Standard Reference Tape is provided by the calibration factors supplied with each Secondary Standard Reference Tape.

11.4 Read signal amplitude

The signal amplitude shall be measured at a point in the read channel where the signal is proportional to the rate of change of flux in the read head.

The Average Signal Amplitude of an interchanged cartridge shall be between 75 % and 125 % of the SRA.

Averaging for the interchanged cartridge may be segmented into blocks. No missing pulses shall occur within the measured area.

Traceability to the SRA is provided by the calibration factors supplied with each Secondary Standard Reference Tape.

--`,,```,,,,````-`-`,,`,,`,`,,`---

© ISO/IEC 2000 – All rights reserved

Copyright International Organization for Standardization
Provided by IHS under license with ISO
No reproduction or networking permitted without license from IHS
Not for Resale

11.5 Azimuth

Flux transitions shall be recorded at an angle with a line normal to the Reference Edge of the tape.

On the Reverse Calibration Tracks (12.4), this angle shall not exceed 10'.

On physical tracks with an odd Physical Track Number, this angle shall be + 9,41° ± 0,03°

On physical tracks with an even Physical Track Number, this angle shall be - 9,41° ± 0,03°

11.6 Channel skew

The deviation between corresponding Channel bits on the physical tracks of a logical track (see 12.5.2) shall not exceed 200 Channel bit cell lengths for any pair of these physical tracks.

12 Tape format

12.1 Reference Edge

The Reference Edge shall be the bottom edge when viewing the magnetic coating of the tape with the BOT to the left and the EOT to the right of the observer.

12.2 Direction of recording

Recording shall take place in two directions:

— forward: from BOT to EOT

— reverse: from EOT to BOT

12.3 Tape layout

The tape shall partitioned into two areas:

— the Calibration and Directory Area,

— the Data Area.

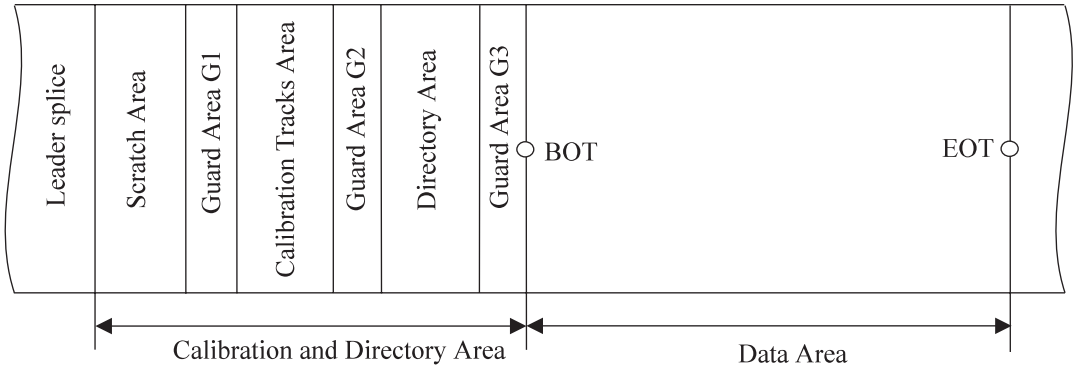

Figure 20 — Tape layout

12.4 Calibration and Directory Area

The Calibration and Directory Area shall be partitioned as shown in figures 21 and 22. It shall extend from the leader splice to the BOT over 13 260 mm ± 150 mm and comprise the following zones.

© ISO/IEC 2000 – All rights reserved
Copyright International Organization for Standardization
Provided by IHS under license with ISO
No reproduction or networking permitted without license from IHS
Not for Resale

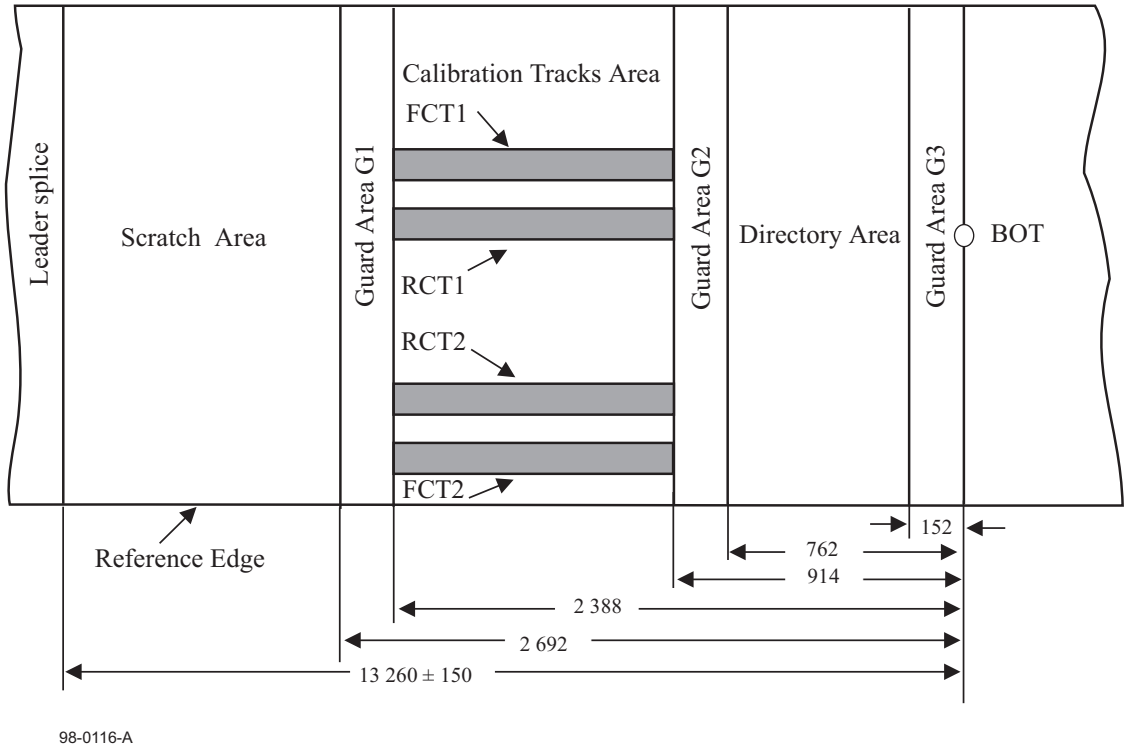

Figure 21 — Calibration and Directory Area

12.4.1 Scratch Area

The Scratch Area shall start at the leader splice and shall end at a distance of 2 692 mm ± 50 mm from the BOT. It is intended for use by the drive for setting gains, write current, etc.

12.4.2 Guard Area G1

Guard Area G1 shall start at the end of the Scratch Area and shall end at a distance of 2 388 mm ± 50 mm from the BOT.

12.4.3 Calibration Tracks Area

The Calibration Tracks Area shall start at the end of the Guard Area G1 and shall end at a distance of 914 mm ± 50 mm from the BOT.

The Calibration Tracks Area shall contain four Calibration Tracks the width of which shall be 0,215 9 mm ± 0,012 7 mm. They are defined as follows.

Forward Calibration Track 2 (FCT2)

The centreline of FCT2 shall be at a distance of 0,908 mm ± 0,030 mm from the Reference Edge (figure 22).

FCT2 shall be recorded at $2f$ = 2 578 ftpmm ± 44 ftpmm with a positive azimuth angle of + 9,41° ± 0,03°, starting at the end of Guard Area G1 and ending at a distance of 2 108 mm ± 50 mm from the BOT (See figure 22). Following this section, FCT2 shall be recorded at $1f$ = 1 289 ftpmm ± 22 ftpmm ending at a distance of 914 mm ± 50 mm from the BOT (See figure 21).

Forward Calibration Track 1 (FCT1)

The centreline of FCT1 shall be at a distance of 6,633 mm ± 0,030 mm from that of FCT2.

FCT1 shall be recorded as specified for FCT2.

Reverse Calibration Track 2 (RCT2)

The centreline of RCT2 shall be at a distance of 1,505 mm ± 0,030 mm from the Reference Edge.

RCT2 shall be recorded with $2f$ = 2 578 ftpmm ± 44 ftpmm starting at Guard Area G2 and ending at a distance of 1 219 mm ± 50 mm from the BOT (See figure 22). Following this section RCT2 shall be recorded with $1f$ = 1 289 ftpmm ± 22 ftpmm ending at a distance of 2 388 mm ± 50 mm from the BOT.

© ISO/IEC 2000 – All rights reserved

Copyright International Organization for Standardization
Provided by IHS under license with ISO
No reproduction or networking permitted without license from IHS
Not for Resale

Reverse Calibration Track 1 (RCT1)

The centreline of RCT1 shall be at a distance of 5,334 mm ± 0,030 mm from that of RCT2.

RCT1 shall be recorded as specified for RCT2.

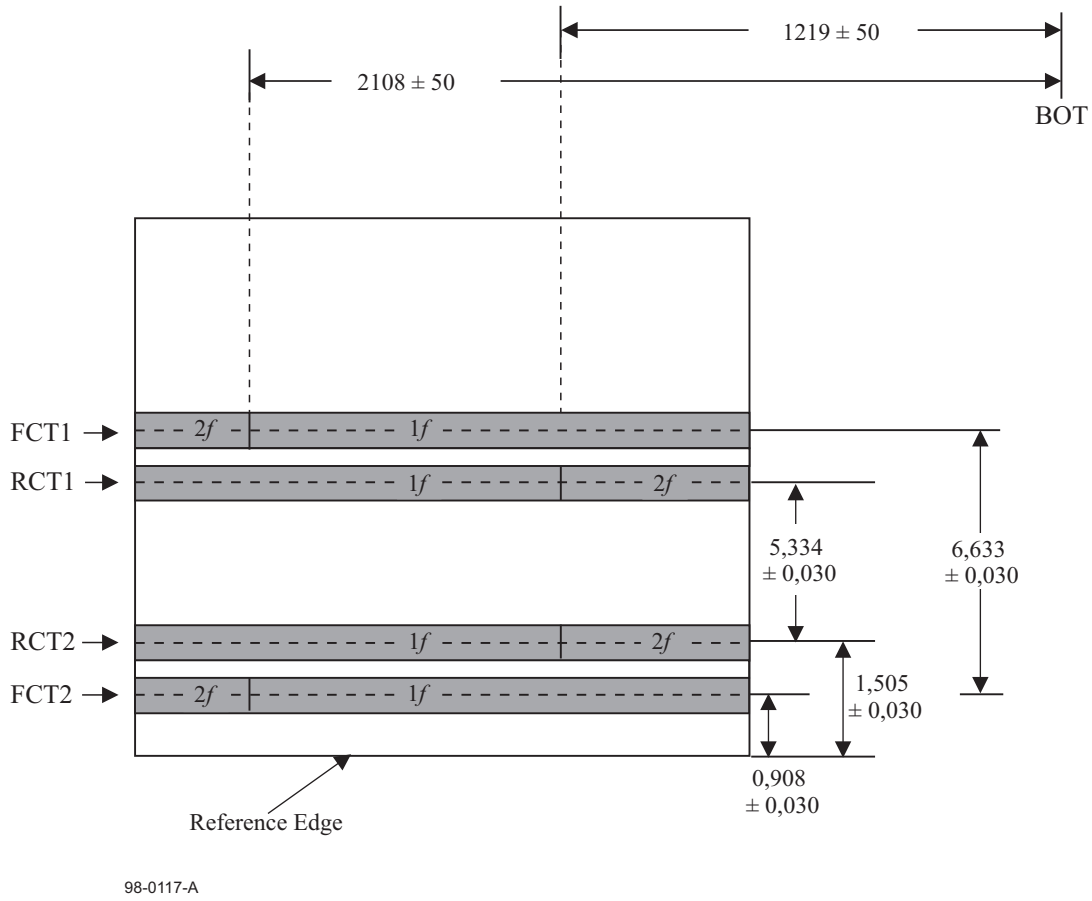

Figure 22 — Calibration Tracks Area

12.4.4 Guard Area G2

Guard Area G2 shall start at the end of the Calibration Tracks Area and shall end at a distance of 762 mm ± 50 mm from the BOT.

12.4.5 Directory Area

The Directory Area shall start at the end of the Guard Area G2 and end at a distance of 152 mm ± 50 mm from the BOT. It shall be recorded on two physical tracks having their centrelines 2,604 mm ± 0,030 mm above those of FCT1 and FCT2, respectively.

The Directory Area is intended for recording manufacturer's information about the recordings on the tape. This information shall be recorded in the reverse direction, starting at its end specified above. The content of the Directory Area shall be ignored in interchange.

12.4.6 Guard Area G3

Guard Area G3 shall start at the end (see 12.4.5) of the Directory Area and shall end at the BOT.

12.5 Data Area

The Data Area shall contain data which is transmitted by the host to the drive and recorded according to the format specified in clause 13. The quantity of recorded data may be such that the total capacity of the maximum number of physical tracks, viz. 208, is required in order to contain it. It may, under other circumstances, be less in which case fewer than 208 physical tracks will be required. The following specifications are based on the former case.

--`,,```,,,,````-`-`,,`,,`,`,,`---

© ISO/IEC 2000 – All rights reserved
Copyright International Organization for Standardization
Provided by IHS under license with ISO
No reproduction or networking permitted without license from IHS
Not for Resale

12.5.1 Physical tracks

There shall be 208 physical tracks in the Data Area each identified by a Physical Track Number. Physical track No. 208 shall be that farthest from the Reference Edge and physical track No. 1 shall be that nearest to the Reference Edge.

12.5.1.1 Width of the physical tracks

The width of a physical track shall be 0,043 18 mm ± 0,012 70 mm.

12.5.1.2 Locations of the physical tracks

The locations of the centrelines of the physical tracks are related to those of the centrelines of the Forward Calibration Tracks.

The positions of the centrelines of the physical tracks relative to those of the Calibration Tracks shall be as specified in table 2. A positive offset indicates that the physical track is above the referenced Calibration Track, a negative offset that it is below the referenced Calibration Track.

The physical tracks of logical tracks 0, 25, 26 and 51 (see 12.5.2) may be wider than the other physical tracks. The centre line of the usable part of these tracks is at a distance of 0,044 45 mm ± 0,003 20 mm from the centre line of the previously written adjacent track.

Table 2 — Locations of the physical tracks

Physical Track Numbers *n*	**Location of the physical tracks Tolerance : ± 0,003 20**
1	FCT2 - 0,377 83
2	FCT2 - 0,428 63
3 to 26	FCT2 - [0,387 35 + (*n*-1) 0,044 45]
27	FCT2 + 2,885 87
28	FCT2 + 2,936 87
29 to 52	FCT2 + [01,739 90 + (*n*-27) 0,044 45]
53 to 78	FCT2 + [2,927 35 + (*n*-53) 0,044 45]
79 to 104	FCT2 + [4,279 90 + (*n*-79) 0,044 45]
105	FCT1 - 0,993 77
106	FCT1 - 0,942 97
107 to 130	FCT1 - [0,984 25 + (*n*-105) 0,044 45]
131	FCT1 + 0,358 77
132	FCT1 + 0,409 57
133 to 156	FCT1 + [0,368 30 + (*n*-131) 0,044 45]
157 to 182	FCT1 + [1,555 75 + (n-157) 0,044 45]
182 to 208	FCT1 + [2,908 30 + (*n*-183) 0,044 45]

12.5.1.3 Layout of tracks in the Data Area

The layout of tracks in the Data Area shall be as shown in figure 23.

© ISO/IEC 2000 – All rights reserved

Copyright International Organization for Standardization
Provided by IHS under license with ISO
No reproduction or networking permitted without license from IHS
Not for Resale

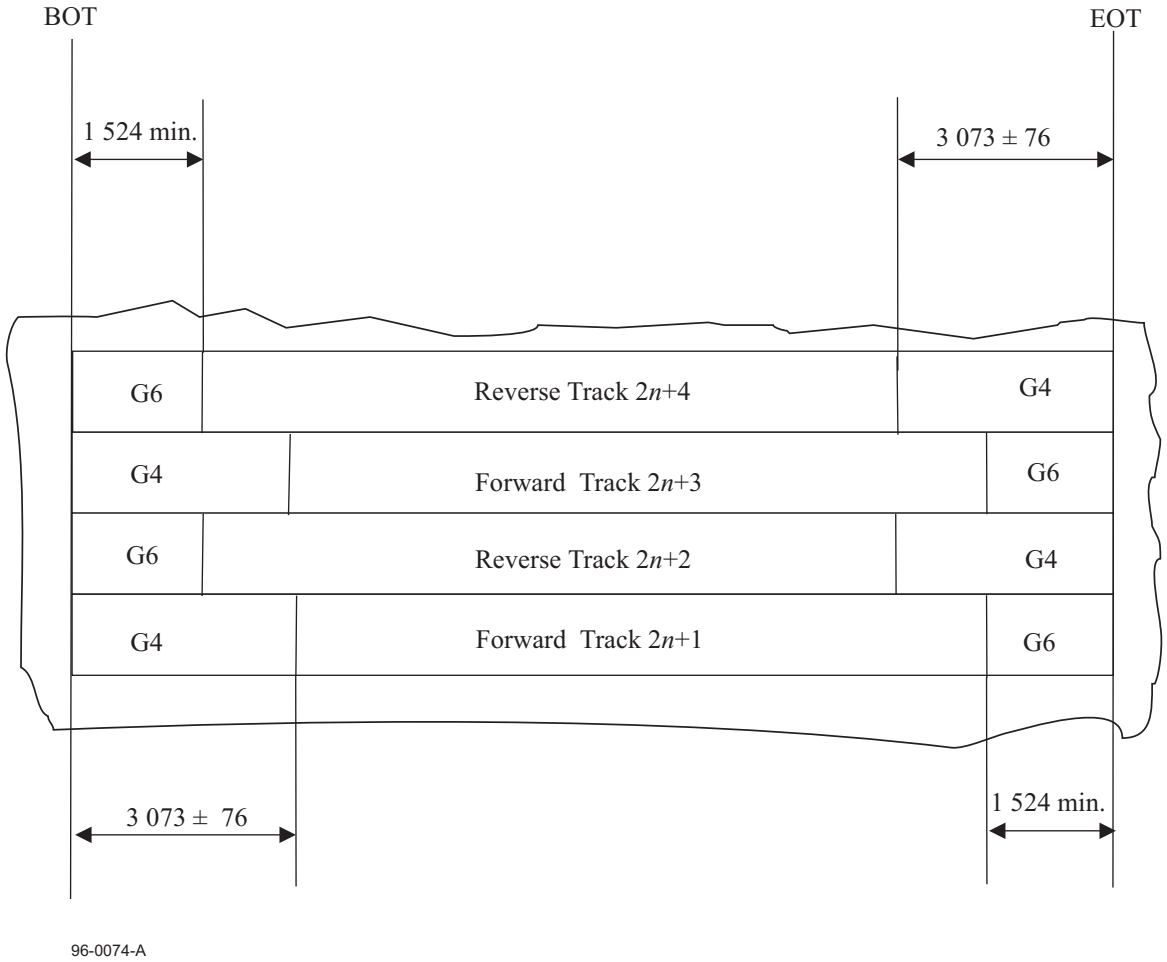

Figure 23 — Layout of the tracks of the Data Area ($0 \leq n \leq 102$)

12.5.1.3.1 Forward tracks

The physical tracks with an odd Physical Track Number shall be recorded in forward direction, i.e. from BOT to EOT, and shall have the following layout.

Guard Area G4

Guard Area G4 shall start at the BOT and end at a distance of 3 073 mm ± 76 mm from the BOT.

Guard Area G6

The track shall end with a Guard Area G6 which shall start at a distance of 1 524 mm min. from the EOT and end at the EOT.

NOTE - In International Standards ISO/IEC 13421, ISO/IEC 13962 and ISO/IEC 14833 the tracks start with a 3-zone part comprising Guard Zone G4, a 2f-recorded zone and Guard Zone G5, and end with Guard Zone G6. In this International Standard, as in International Standards ISO/IEC 15307 and ISO/IEC 15898 this 3-zone part is reduced to Guard Zone G4. For the sake of coherence of designation and in order to ease comparison between these related International Standards, in this clause and in 12.5.1.3.2 the notation G6 has been kept although there is no G5 anymore.

12.5.1.3.2 Reverse tracks

The physical tracks with an even Physical Track Number shall be recorded in reverse direction, i.e. from EOT to BOT, and shall have the following layout.

Guard Area G4

This Guard Area G4 shall start at the EOT and end at a distance of 3 073 mm ± 76 mm from the EOT.

Guard Area G6

The track shall end with a Guard Area G6 which shall start at a distance of 1 524 mm min. from the BOT and end at the BOT.

12.5.2 Logical tracks

A logical track shall consist of four physical tracks recorded and read simultaneously.

© ISO/IEC 2000 – All rights reserved
Copyright International Organization for Standardization
Provided by IHS under license with ISO
No reproduction or networking permitted without license from IHS
Not for Resale

Logical tracks are identified by a Logical Track Number from 0 to 51. They are recorded in ascending order of their Logical Track Numbers, starting with logical track No. 0.

Logical tracks with an even Logical Track Number shall be recorded in the forward direction on physical tracks with an odd Physical Track Number.

Logical tracks with an odd Logical Track Number shall be recorded in the reverse direction on physical tracks with an even Physical Track Number.

The allocation of physical tracks to logical tracks shall be as specified in table 3.

Table 3 — Allocation of physical tracks to logical tracks

Logical Track Number *x*	Physical Track Numbers
$0 \le x \le 25$	(x+1) (x+27) (x+105) (x+131)
$26 \le x \le 51$	(x+27) (x+53) (x+131) (x+157)

Figure 24 shows, as an example, logical tracks No. 0, No. 25, No. 26 and N. 51 with their respective physical tracks.

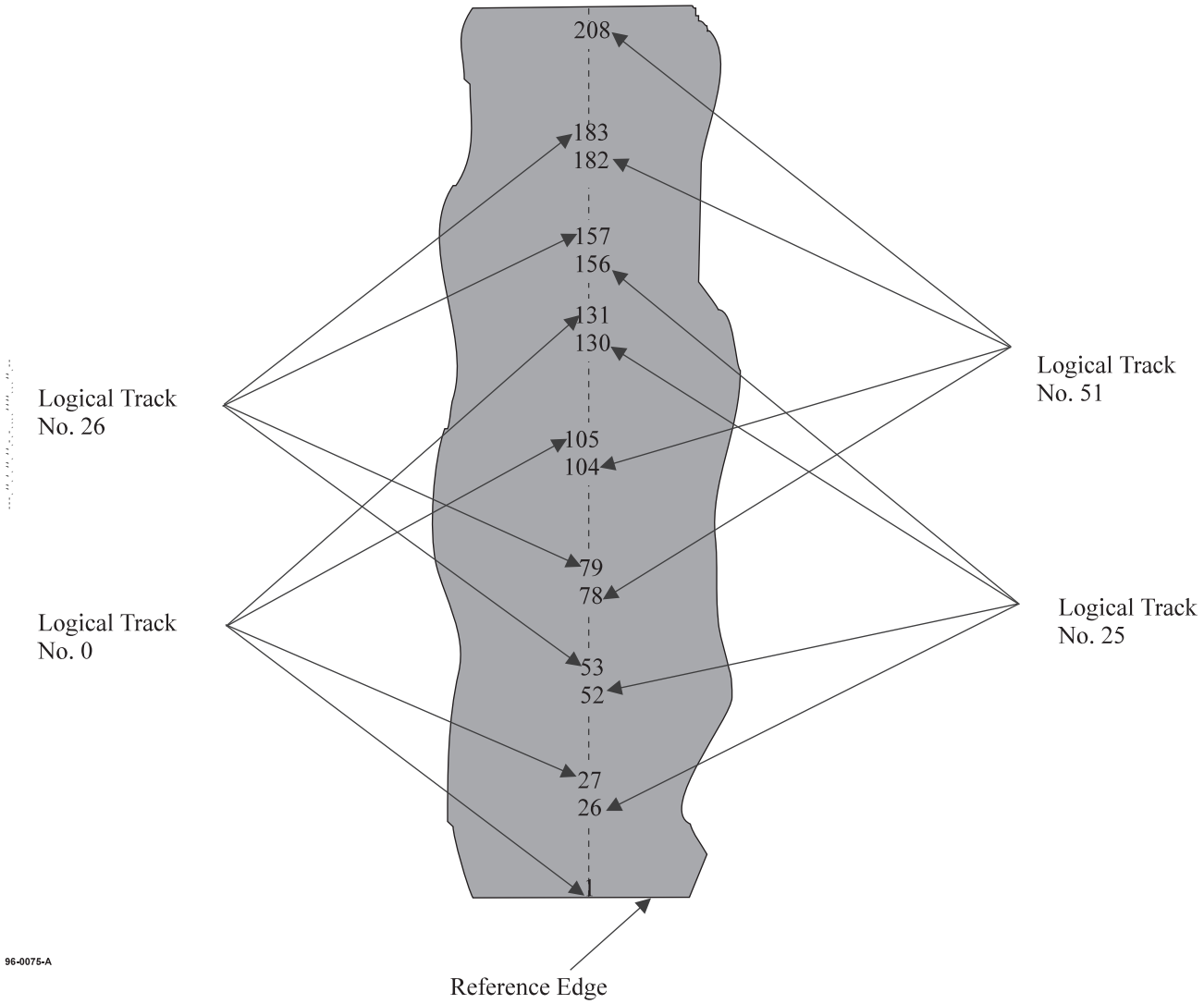

Figure 24 — Examples of logical tracks

© ISO/IEC 2000 – All rights reserved

Copyright International Organization for Standardization
Provided by IHS under license with ISO
No reproduction or networking permitted without license from IHS
Not for Resale

13 Data format

The host transmits to the drive data in the form of Records, each comprising one or more bytes the interpretation of which is outside the scope of this International Standard and is a matter of agreement between sender and recipient of the data.

The maximum size of a Record permitted by the format is 2^{24} - 1 bytes.

13.1 Data Bytes

Data Bytes shall be

— User Bytes transmitted by the host
— Groups of 8 bytes for MAP entries (see 13.6.3.3)
— Pad Bytes which are bytes set to all ZEROs.

13.2 Data Blocks

After having been received from the host, Records shall be arranged in groups of 8 208 Data Bytes. To each of these groups the same following elements shall be added:

— a Preamble (see 13.6.1)
— a Sync (see 13.6.2)
— 16-bit CRC (see 13.6.3.1a)
— 2 EDC bytes (see 13.6.4)
— 2 Pad bytes (see figure 25)
— a Control Field 1 (see 13.6.5)
— a Control Field 2 (see 13.6.6)
— 64-bit CRC (see 13.6.7)
— a Postamble (see 13.6.8)

Each of these groups of 8 208 bytes together with these 9 elements form a block of 8 450 bytes of the type called a Data Block.

13.3 Types of Blocks

There are five types of blocks:

Data Blocks (see 14.1)
Filler Blocks (see 14.2)
End of Track Blocks (EOTR) (see 14.3)
End of Data Blocks (EOD) (see 14.4)
ECC Blocks (see 14.5)

13.4 Entities

Blocks, except EOTR and EOD Blocks (see clause 15), shall be recorded in Entities. An Entity shall be recorded entirely on the same logical track.

Each block shall be preceded by a gap consisting of a d.c. erased portion of tape of a nominal length of 0,303 mm, in which the read signal is less than 5 % of the Average Signal Amplitude.

The format of Entities is specified in clause 15.

13.5 Envelopes

Entities shall be grouped in Envelopes. The number of Entities in an Envelope constitutes the size of the Envelope. This size shall be 3 max. The format of Envelopes is specified in clause 16.

13.6 Block format

Blocks shall have the format shown in figure 25. For ECC Blocks, see 14.5.

© ISO/IEC 2000 – All rights reserved
Copyright International Organization for Standardization
Provided by IHS under license with ISO
No reproduction or networking permitted without license from IHS
Not for Resale

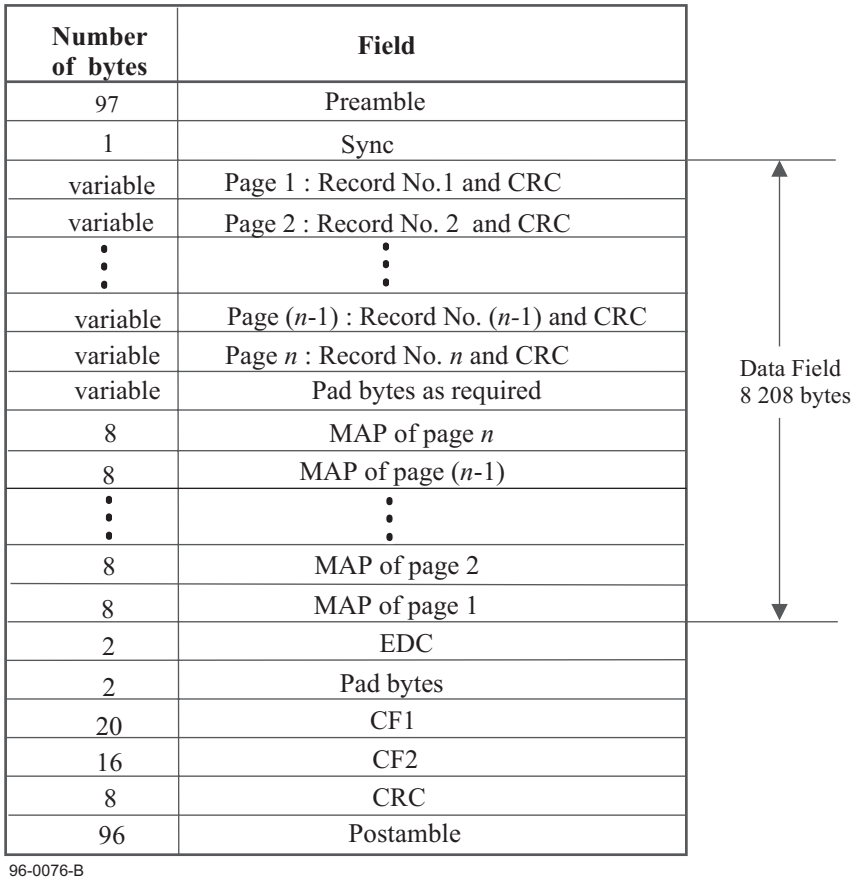

Figure 25 — Block format

13.6.1 Preamble

This field shall be set to 776 ONEs.

13.6.2 Sync

This field shall be set to 0110 1111. It indicates that the next byte is the first byte of the Data Field.

13.6.3 Data Field

The Data Field of a block shall comprise 8 208 bytes arranged in one or more pages of variable length and in 8-byte MAP entries. A MAP entry shall correspond to each page. Pages start at byte position 99 and extend over byte positions with increasing numbers, whereas MAPs start at byte position 8 307 and extend over byte positions with decreasing numbers ("upwards" as seen in figure 25).

A page shall contain a Record or a part of a Record of variable length. If the number of bytes of a Record is odd, the Record shall be completed with one Pad Byte.

A Record can either be entirely contained in the Data Block, or start in the Data Block and end in a following Data Block, or start in a previous Data Block and end in the Data Block, or in a following Data Block.

The content of the Data Fields of blocks of other types is described in the specification of these other blocks.

13.6.3.1 Page layout

The number of bytes in a page shall always be a multiple of 4.

a) In each page the Record shall be followed by a 16-bit CRC (see annex D), except as specified in d), e) and f) below.

b) If the total number of Data Bytes of a Record and its CRC in a page is a multiple of 4, this page is followed by the next page, if any.

c) If the number of Data Bytes of a Record in a page is a multiple of 4, its CRC is followed by two Pad Bytes in this page.

d) If a Record or part of a Record comprises 8 208 bytes, its CRC shall be recorded in the first page of the next Data Block. The content of this first page shall consist of this CRC followed by two Pad bytes.

© ISO/IEC 2000 – All rights reserved

Copyright International Organization for Standardization
Provided by IHS under license with ISO
No reproduction or networking permitted without license from IHS
Not for Resale

e) If a Record starts and ends in other Data Blocks, the part recorded in this Data Block is not followed by a CRC.

f) If a Record starts in the Data Block and continues in the following Data Block, it is not followed by a CRC in the Data Block.

13.6.3.2 Pad Bytes

After the last page, the Data Field shall be completed with Pad Bytes. A MAP entry shall correspond to these bytes. The Page Type shall be Filler (see 13.6.3.3).

No new page shall start if 16 bytes or less remain in the Data Field. There shall be no MAP entry for these bytes.

13.6.3.3 MAP entries

Each MAP entry shall consist of 8 bytes. It specifies attributes of a page. The content of each MAP entry shall be as specified in figure 26. When recorded on the tape, MAP entries shall be formatted as specified by annex E.

Field	Setting
Page Type 3 bits	001 Filler 010 Data 011 Tape Mark
N Bit	ZERO = The Record ends in this Data Block ONE = The Record continues in the next Data Block
P Bit	ZERO = The Record starts in this Data Block ONE = The Record does not start in this Data Block
L Bit	ZERO = There is a further MAP ONE = This is the last MAP
1 bit	This bit shall be set to ZERO
C Bit	ZERO = The data of the Record is not compressed ONE = The data of the Record is compressed.
Group Record Count 1 byte	- When set to the value 1 : Shall indicate that the Record is not a Group Record. - When set to a value in the range 2 to 255 : Shall indicate that the Record is a Group Record by specifying the number of Sub-Records constituting the Group Record. - The value 0 is prohibited by this International Standard.
Page Byte Count 16 bits	Number of User Bytes and/or Pad Bytes of the page
Record Byte Count 32 bits	Total number of bytes in the Record

Figure 26 — Content of MAP entries

If the Page type is Filler or Tape Mark, the Page Byte Count shall specify the number of remaining Pad Bytes in the Data Field, and the content of the Record Byte Count shall be ignored.

13.6.4 EDC

The Data field shall be followed by a 2-byte field containing a 16-bit EDC computed over the 8 208 bytes of the Data Field as follows.

Each EDC character is a 16-bit word computed over 4 104 16-bit Data Words formed from the 8 208 bytes of the Data Field. The first Data Byte constitutes the least significant part of the first Data Word, the second Data Byte constitutes its most significant part, and so on. With these 4 104 Data Words identified by $1 \leq i \leq 4\,104$, the EDC word is obtained by the following algorithm.

Set EDC_0 to (00)(45)

Set EDC_i to $EDC_{i-1} \oplus (\text{Data Word})_i$

© ISO/IEC 2000 – All rights reserved
Copyright International Organization for Standardization
Provided by IHS under license with ISO
No reproduction or networking permitted without license from IHS
Not for Resale

Shift EDC_i leftwards by one bit position, with the most significant bit moved to the least significant bit position.

where: ⊕ stands for Exclusive OR.

This algorithm yields $EDC_{4\ 104}$ which is the 16-bit pattern recorded in byte positions 8 308 and 8 309 of the Block format.

13.6.5 Control Field 1 (CF1)

CF1 is a 160-bit field. It specifies attributes of a block.

The content of CF1 shall be as shown in figure 27. When recorded on the tape, this field shall be formatted as specified by annex F.

Number of bits	Field
26	Set to ZERO
6	Format
24	Tape Mark
8	Compression
32	Object Number
16	Sequential Number of the Record Blocks
4	Sequential File Mark Offset
12	Sequential File Mark Number
3	Block Type
1	Early Warning
4	Envelope Size
24	Envelope Back Link

Figure 27 — Content of Control Field 1

This format is not applicable to ECC Blocks (see 14.5).

13.6.5.1 Reserved field

The reserved bits shall be set to ZERO.

13.6.5.2 Format

This field shall be set to 000110.

13.6.5.3 Tape Mark

This field shall be set to ZERO for all blocks prior to the first one containing a page of type Tape Mark.

For Data Blocks this field shall specify in binary notation the ordinal number of the previous Data Block containing a page of type Tape Mark.

For EOTR and EOD Blocks, this field shall be set to all ZEROs.

13.6.5.4 Compression

This field shall express in binary notation a numerical identifier of the compression algorithm, where applicable, else it shall be set to all ZEROs (see ISO/IEC 11576) .

13.6.5.5 Object Number

This field is a count of all Records and pages of type Tape Mark on the tape, starting with 1 and incremented by 1 for each Record and each page of type Tape Mark.

The content of this field in EOTR and EOD Blocks shall be set to all ZEROs.

13.6.5.6 Sequential Number of the Record Blocks

If a Record extends over more than one block, this field shall specify in binary notation the sequential number of these blocks, starting with 1 and incremented by 1 for each further block.

If a Record does not extend over more than one block, this field shall be set to all ZEROs.

© ISO/IEC 2000 – All rights reserved

Copyright International Organization for Standardization
Provided by IHS under license with ISO
No reproduction or networking permitted without license from IHS
Not for Resale

13.6.5.7 Sequential File Mark Offset

This field shall specify in binary notation the number of pages of type Tape Mark within a group, starting with 2 for the second such page in that group.

13.6.5.8 Sequential File Mark Number

This field is a count of the number of groups of at least two consecutive pages of type Tape Mark, which groups are separated by at least one Data Block having no page of type Tape Mark, starting with 1 and incremented by 1 for each such group.

13.6.5.9 Block Type

This field specifies the type of blocks as a 3-bit pattern.

Bit pattern	Type of the block
000	Filler Block
001	Data Block
011	End of Track Block
100	End of Data Block
101	ECC Block

Other settings are not permitted by this International Standard.

13.6.5.10 Early Warning (EW)

On logical tracks No. 0 to No. 50 the EW bit shall be set to ZERO. On logical track No. 51 it shall be set to ZERO until the EW signal has been generated. After this signal it shall be set to ONE in all remaining blocks of that logical track.

On Forward Tracks the EW signal shall be generated at least 1 650 mm from the EOT. On Reverse Tracks the EW signal shall be generated at least at 1 650 mm from the BOT.

13.6.5.11 Envelope Size

This field shall specify the number of Entities in the Envelope.

13.6.5.12 Envelope Back Link

This field shall specify the Block Offset of the last block of the previous Envelope. On logical track No. 0 the Envelope Back Link of all blocks of the first Envelope shall be set to all ONEs. The first Envelope of all other logical tracks shall contain the Block Offset of the last block of the last Envelope of the previous logical track.

13.6.6 Control Field 2 (CF2)

CF2 is a 128-bit field. It specifies further attributes of a block, of the Entity and of the Envelope in which it is recorded.

The content of CF2 shall be as shown in figure 28. When recorded on the tape, this field shall be formatted as specified by annex G.

Number of bits	Field
5	Set to ZERO
5	Entity Offset
32	Block Offset
24	Envelope First Object Number
5	Entity Size
1	First Block of a record
8	Entity Number
16	Envelope Number
24	Random Tag
1	K Bit
7	Logical Track Number

Figure 28 — Content of Control Field 2

--`,,```,,,,````-`-`,,`,,`,`,,`---

© ISO/IEC 2000 – All rights reserved
Copyright International Organization for Standardization
Provided by IHS under license with ISO
No reproduction or networking permitted without license from IHS
Not for Resale

13.6.6.1 Entity Offset

This field shall specify in binary notation the ordinal number of consecutive blocks within an Entity. This count shall start with 1 for the first block and be incremented by 1 for each subsequent block.

13.6.6.2 Block Offset

This field shall specify in binary notation the ordinal number of a block, starting with 0 for the first block, and incremented by 1 for each subsequent block recorded on the same logical track.

13.6.6.3 Envelope First Object Number

This field shall specify the Object Number of the first block of the Envelope.

13.6.6.4 Entity Size

This field shall specify the number of blocks recorded within the Entity, excluding Filler Blocks .

13.6.6.5 First Block of a record

This bit shall be set to ONE if the block is the first block of a Record, else it shall be set to ZERO.

13.6.6.6 Entity Number

This field shall specify the ordinal number of an Entity within an Envelope. The least significant four bits specify this number. The most significant four bits specify the number 0 for the first Envelope on logical track No. 0. This number is incremented by 1 (mod 16) for each following Envelope on the tape.

13.6.6.7 Envelope Number

This field shall specify the ordinal number of an Envelope on a logical track, starting with 1 for the first Envelope and incremented by 1 for each subsequent Envelope.

13.6.6.8 Random Tag

This field shall specify in binary notation a pseudo-random number. This number provides an additional check capability by comparing the value obtained by the read-while-write process with the pseudo-random number generated. This field shall be ignored in interchange.

13.6.6.9 K Bit

In the first four blocks of an Envelope, this bit shall be set to ONE if any block in the preceding Envelope is in error. Once the erroneous track(s) of the preceding Envelope has been y re-written, these K Bits shall be re-set to ZERO.

13.6.6.10 Logical Track Number

This field shall specify in binary notation the Logical Track Number (from 0 to 51) of the logical track on which the block is recorded.

13.6.7 CRC

This field shall contain the 64-bit CRC. The CRC is computed over the 8 208 bytes of the Data Field, EDC, the two Pad bytes, CF1 and CF2. The algorithm for the CRC shall be as specified in annex B.

13.6.8 Postamble

This field shall set to 768 ONEs.

14 Use of blocks

14.1 Data Blocks

Data Blocks shall contain User Bytes. Any byte position of the Data Field of any block not used for User Bytes and MAP Entries shall contain a Pad Byte.

14.2 Filler Blocks

Filler Blocks shall be used only to complete an Entity (see clause 15).

The Data Field of Filler Blocks shall be set to all ZEROs.

14.3 End of Track Blocks (EOTR)

If after completion of the last Envelope on a logical track, more data is to be recorded on the next logical track, then at least 11 EOTR Blocks shall be recorded on the logical track after this last Envelope, and the further data is recorded on the next logical track.

© ISO/IEC 2000 – All rights reserved

Copyright International Organization for Standardization
Provided by IHS under license with ISO
No reproduction or networking permitted without license from IHS
Not for Resale

If after completion of the last Envelope on a logical track, no more data is to be recorded on the next logical track, then at least 11 EOTR Blocks shall be recorded on each track of the logical track after this last Envelope, and the next logical track starts with at least 11 EOD Blocks (see 14.4) .

The Data Field of an EOTR Block is not specified by this International Standard and shall be ignored in interchange.

14.4 End of Data Blocks (EOD)

At least 11 EOD Blocks shall be recorded to indicate the end of the data recorded on the tape.

The Data Field of an EOD Block is not specified by this International Standard and shall be ignored in interchange.

14.5 ECC Blocks

The bytes of the four ECC Blocks shall be computed over the 8 208 bytes of the Data Field, the two EDC bytes, the two Pad bytes, the first 16 bytes of CF1 (see annex F) of the preceding blocks of an Entity. The 4 114 ECC 2-byte words shall be recorded in byte positions 99 to 8 326, thus the CF1 of ECC Blocks consist only of the 4-byte field in byte positions 8 327 to 8 330.

The CF2 of ECC Blocks shall be as specified in 13.6.6.

The ECC Blocks shall be completed by a CRC computed as specified in 13.6.7.

Annex C specifies how the ECC bytes shall be computed.

15 Format of Entities

An Entity shall consist of 20 blocks numbered consecutively from 1 to 20. At least blocks No. 1 and No. 2 shall be Data Blocks. Blocks No. 3 to No. 16 shall be either Data Blocks or Filler Blocks.

— Block No. 17 shall be the ECC1 Block
— Block No. 18 shall be the ECC2 Block
— Block No. 19 shall be the ECC3 Block
— Block No. 20 shall be the ECC4 Block.

After computation of the ECC Blocks, the Data Blocks and the ECC Blocks are recorded on the tape, the Filler Blocks are not.

EOTR and EOD Blocks are not part of Entities.

16 Format of Envelopes

Each Entity within an Envelope shall be identified by its Entity Number (13.6.6.6) related to that Envelope.

Envelopes shall not span logical tracks. After a write command from the host, recording shall start in a new Envelope immediately after the block preceding the first EOD Block. EOD Blocks shall be overwritten.

17 Error handling

When a block is in error, it shall be re-written on any other physical track of the same logical track until it is written successfully (see also 13.6.6.9).

© ISO/IEC 2000 – All rights reserved
Copyright International Organization for Standardization
Provided by IHS under license with ISO
No reproduction or networking permitted without license from IHS
Not for Resale

Annex A
(normative)

Measurement of light transmittance

A.1 Introduction

The following description outlines the general principle of the measuring equipment and measuring method to be applied when measuring the light transmittance of the tape.

For the purpose of this International Standard light transmittance is defined by convention as the relationship between the reading obtained from the measuring equipment with the test piece inserted and the reading obtained when no test piece is present. The transmittance value is expressed as the percentage ratio of the two readings. The requirement of a value of less than 5 % shall be met for the two wavelengths specified in A.2.1.

A.2 Description of the measuring equipment

The equipment shall comprise:

— the radiation source,
— the radiation receiver,
— the measuring mask,
— the optical path,
— the measuring circuitry.

A.2.1 Radiation source

Two infra-red light-emitting diodes (LED) with the following parameters shall be used successively:

LED No. l

Wavelength at peak emission : 750 nm ± 50 nm

Half-power bandwidth : ± 50 nm

LED No. 2

Wavelength at peak emission : 1 050 nm ± 50 nm

Half-power bandwidth : ± 50 nm

A.2.2 Radiation receiver

A flat silicon photo diode shall be used. It shall be operated in the short-circuit mode.

A.2.3 Measuring mask

The measuring mask shall have a thickness of 2 mm and a circular aperture of diameter *d* such that the area is 80 % to 100 % of the active area of the photo diode.

The surface of the mask shall be mat black.

The test piece shall be held firmly against the mask to cover the aperture and to ensure that no ambient light leaks past.

A.2.4 Optical path (figure A.1)

The optical path shall be perpendicular to the mask. The distance *L* from the emitting surface of the LED to the mask shall be

$$L = \frac{d}{2 \tan \alpha} \text{ mm}$$

where α is the angle where the relative intensity of the LED is not less than 95 % of the maximum intensity of the optical axis.

© ISO/IEC 2000 – All rights reserved

Copyright International Organization for Standardization
Provided by IHS under license with ISO
No reproduction or networking permitted without license from IHS
Not for Resale

A.2.5 Finish

The whole assembly shall be enclosed in a mat black case.

A.2.6 Measuring circuitry (figure A.2)

The components of the measuring circuitry are:

E : regulated power supply with variable output voltage

R : current-limiting resistor

LED : light-emitting diode

Di : silicon photo diode

A : operational amplifier

R_{f0}, R_{f1} : feedback resistors

S : gain switch

V : voltmeter

The forward current of the LED, and consequently its radiation power, can be varied by means of the power supply E.

Di is operating in the short circuit mode.

The output voltage of the operational amplifier is given by

$V_0 = I_k \times R_f$ where I_k is the short-circuit current of Di.

The output voltage is therefore a linear function of the light intensity.

R_{f0} and R_{f1} shall be low temperature-drift resistors with an accuracy of 1 %.

The following ratio applies:

$$\frac{R_{f0}}{R_{f1}} = \frac{1}{20}$$

A.3 Measuring method

Set switch S to position 0.

With no test piece mounted, vary the supply voltage of E until voltmeter V reads full scale (100 %).

Mount a test piece of magnetic tape on the mask. Set switch S to position 1. Full deflection of the voltmeter now represents a light transmittance of 5 %.

Apply the method twice, once with LED No. 1 and once with LED No. 2.

© ISO/IEC 2000 – All rights reserved
Copyright International Organization for Standardization
Provided by IHS under license with ISO
No reproduction or networking permitted without license from IHS
Not for Resale

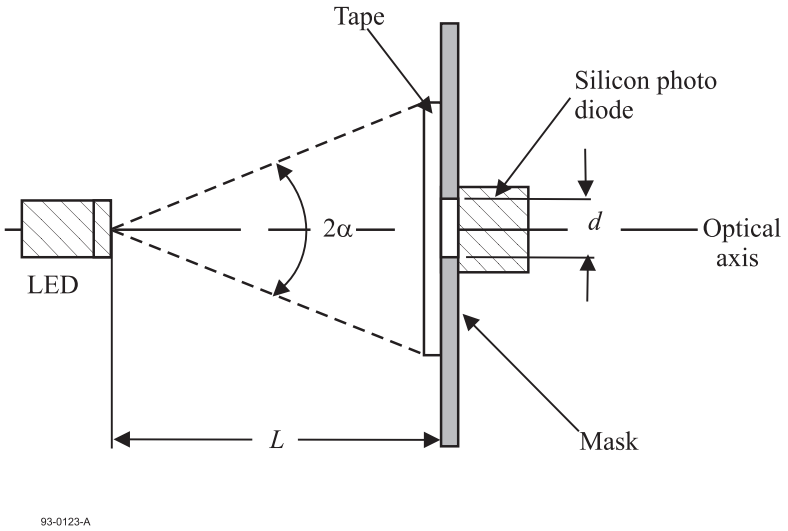

Figure A.1 — Optical arrangement

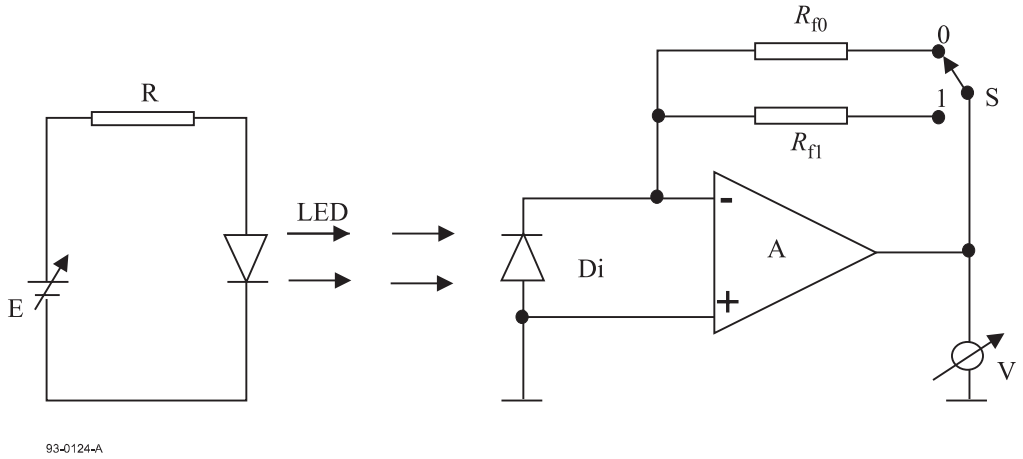

Figure A.2 — Measuring circuitry

© ISO/IEC 2000 – All rights reserved

Copyright International Organization for Standardization
Provided by IHS under license with ISO
No reproduction or networking permitted without license from IHS
Not for Resale

Annex B
(normative)

Generation of the Data Block CRCs

The CRC field shall be recorded as a 64-bit check character computed over the 66 112 bits of the 8 264 bytes, starting with the first byte of the Data Field and ending with the last byte of CF2.

These bits, with b_0 being the low-order bit, shall be the coefficient of the polynomial:

$$M(x) = \sum_{i=0}^{i=66\,112} b_i x^i$$

Let $P(x) = M(x)\, x^{64}$

The generating polynomial shall be

$$G(x) = x^{64} + x^{62} + x^{57} + x^{55} + x^{54} + x^{53} + x^{52} + x^{47} + x^{46} + x^{45} + x^{40} + x^{39} + x^{38} + x^{37} + x^{35} + x^{33} + x^{32} + x^{31} + x^{29} + x^{27} + x^{24} + x^{23} + x^{22} + x^{21} + x^{19} + x^{17} + x^{13} + x^{12} + x^{10} + x^9 + x^7 + x^4 + x + 1$$

The 64-bit CRC character shall be the remainder of the division of $P(x)$ by $G(x)$.

© ISO/IEC 2000 – All rights reserved
Copyright International Organization for Standardization
Provided by IHS under license with ISO
No reproduction or networking permitted without license from IHS
Not for Resale

Annex C
(normative)

ECC generation

C.1 The four ECC Blocks are designated by ECC1, ECC2, ECC3 and ECC4 (see clause 15). Each 8-bit byte of the ECC Blocks is computed over the corresponding bytes in the Data Fields, EDC, Pad bytes and CF1 of the first 16 blocks of an Entity. Thus, for each of the ECC Blocks:

ECC1 (Byte i), ECC2 (Byte i), ECC3 (Byte i) and ECC4 (Byte i)

are based on:

Block 1 (Byte i), Block 2 (Byte i), Block 3 (Byte i) ... and Block 16 (Byte i).

C.2 Each byte of the ECC Blocks is computed as follows.

— At the start of each ECC computation RS1 Byte (i,0), RS2 Byte (i,0), RS3 Byte (i,0) and RS4 Byte (i,0) are set to all ZEROs, where i indicates the position of the byte in the block.

— After passing each group of 16 bytes through the Reed-Solomon generator:

ECC1 Byte (i) → RS1 Byte (i,16)

ECC2 Byte (i) → RS2 Byte (i,16)

ECC3 Byte (i) → RS3 Byte (i,16)

ECC4 Byte (i) → RS4 Byte (i,16)

C.3 Figure C.1 summarizes this process. In this figure i represents the position of the byte and j the Data Block number (j = 1 to 16).

© ISO/IEC 2000 – All rights reserved

Copyright International Organization for Standardization
Provided by IHS under license with ISO
No reproduction or networking permitted without license from IHS
Not for Resale

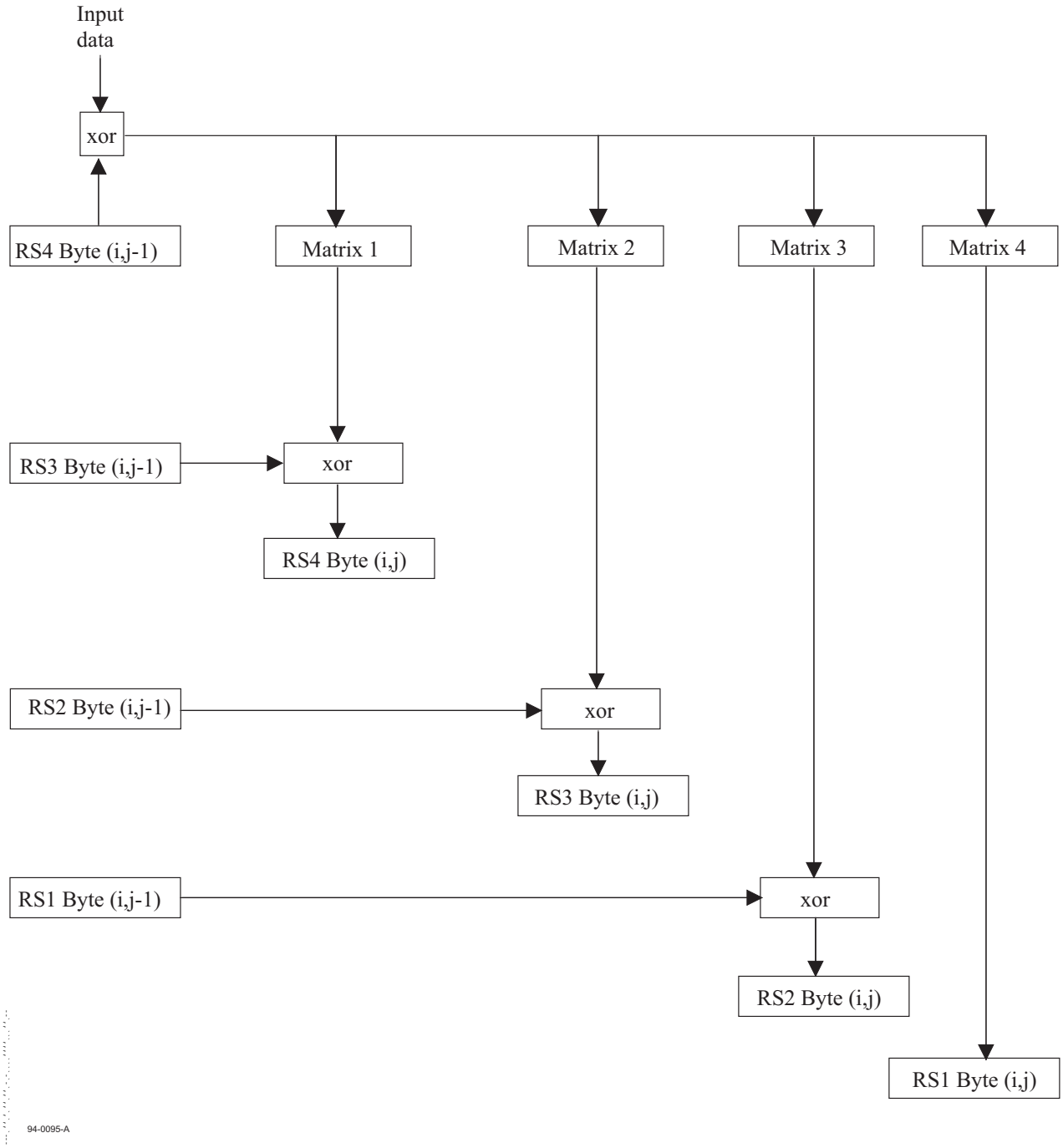

Figure C.1 — ECC Blocks

C.4 The matrices shown in figure C.1 shall be as follows.

- Matrix 4

07 = i7 xor i6 xor i5 xor i1;
06 = i6 xor i5 xor i4 xor i0;
05 = i5 xor i4 xor i3;
04 = i4 xor i3 xor i2;
03 = i6 xor i5 xor i3 xor i2;
02 = i7 xor i6 xor i4 xor i2;
01 = i7 xor i3;
00 = i7 xor i6 xor i2.

© ISO/IEC 2000 – All rights reserved
Copyright International Organization for Standardization
Provided by IHS under license with ISO
No reproduction or networking permitted without license from IHS
Not for Resale

- Matrix 3

07 = i7 xor i5 xor i4 xor i3 xor i2 xor i1;
06 = i7 xor i6 xor i4 xor i3 xor i2 xor i1 xor i0;
05 = i6 xor i5 xor i3 xor i2 xor i1 xor i0;
04 = i7 xor i5 xor i4 xor i2 xor i1 xor i0;
03 = i6 xor i5 xor i2 xor i0;
02 = i7 xor i3 xor i2;
01 = i7 xor i6 xor i5 xor i4 xor i3;
00 = i6 xor i5 xor i4 xor i3 xor i2.

- Matrix 2

07 = i5 xor i3 xor i2;
06 = i4 xor i2 xor i1;
05 = i3 xor i1 xor i0;
04 = i2 xor i0;
03 = i5 xor i3 xor i2 xor i1;
02 = i5 xor i4 xor i3 xor i1 xor i0;
01 = i7 xor i5 xor i4 xor i0;
00 = i6 xor i4 xor i3.

- Matrix 1

07 = i7 xor i6 xor i5 xor i4;
06 = i7 xor i6 xor i5 xor i4 xor i3;
05 = i6 xor i5 xor i4 xor i3 xor i2;
04 = i7 xor i5 xor i4 xor i3 xor i2 xor i1;
03 = i5 xor i3 xor i2 xor i1 xor i0;
02 = i6 xor i5 xor i2 xor i1 xor i0;
01 = i7 xor i6 xor i1 xor i0;
00 = i7 xor i6 xor i5 xor i0.

© ISO/IEC 2000 – All rights reserved

Copyright International Organization for Standardization
Provided by IHS under license with ISO
No reproduction or networking permitted without license from IHS
Not for Resale

Annex D
(normative)

Generation of page CRCs

The CRC in each page shall be a 16-bit check character computed over the k bits of the Record contained in the page.

These k bits b_0 to b_{k-1}, where b_0 is the low order bit, shall be the coefficient of the polynomial

$$M(x) = \sum_{o}^{k-1} b_i x^i$$

Let $P(x) = M(x)x^{16}$.

The remainder of the division of P(x) by the generator polynomial

$$x^{16} + x^{15} + x^2 + 1$$

shall constitute the 16-bit CRC.

--`,,```,,,,````-`-`,,`,,`,`,,`---
© ISO/IEC 2000 – All rights reserved
Copyright International Organization for Standardization
Provided by IHS under license with ISO
No reproduction or networking permitted without license from IHS
Not for Resale

Annex E
(normative)

Format of MAP entries

Before recording on the tape, the fields of MAP entries shall be formatted as specified by figure E.1

Bit position	Field	Length in bits
1 to 8	Group Record Count	8
9	C Bit	1
10 to 12	Page Type	3
13	N Bit	1
14	P Bit	1
15	L Bit	1
16	This bit shall be set to ZERO	1
17 to 24	Page Byte Count, bits 1 to 8	8
25 to 32	Page Byte Count, bits 9 to 16	8
33 to 40	Record Byte Count, bits 17 to 24	8
41 to 48	Record Byte Count, bits 25 to 32	8
49 to 56	Record Byte Count, bits 1 to 8	8
57 to 64	Record Byte Count, bits 9 to 16	8

Figure E.1 — Format of MAP entries

© ISO/IEC 2000 – All rights reserved

Copyright International Organization for Standardization
Provided by IHS under license with ISO
No reproduction or networking permitted without license from IHS
Not for Resale

Annex F
(normative)

Format of Control Field 1

Before recording on the tape, the fields of CF1 shall be formatted as specified by figure F.1.

Bit positions	Field name	Length in bits
1 to 8	Tape Mark, bits 17 to 24	8
9 to 10	These bits shall be set to ZERO	2
11 to 16	Format	6
17 to 24	Tape Mark, bits 1 to 8	8
25 to 32	Tape Mark, bits 9 to 16	8
33 to 36	Compression bits 5 to 8	4
37 to 40	Compression, bits 1 to 4	4
41 to 64	These bits shall be set to ZERO	24
65 to 72	Object Number, bits 17 to 24	8
73 to 80	Object Number, bits 25 to 32	8
81 to 88	Object Number, bits 1 to 8	8
89 to 96	Object Number, bits 9 to 16	8
97 to 104	Sequential Number of the Record Blocks, bits 1 to 8	8
105 to 112	Sequential Number of the Record Blocks, bits 9 to 16	8
113 to 120	Sequential File Mark Number, bits 1 to 8	8
121 to 124	Sequential File Mark Offset	4
125 to 128	Sequential File Mark Number, bits 9 to 12	4
129 to 136	Envelope Back Link, bits 17 to 24	8
137	EW	1
138 to 140	Block Type	3
141 to 144	Envelope Size	4
145 to 152	Envelope Back Link, bits 1 to 8	8
153 to 160	Envelope Back Link, bits 9 to 16	8

Figure F.1 — Format of CF1

--`,,```,,,,````-`-`,,`,,`,`,,`---
© ISO/IEC 2000 – All rights reserved
Copyright International Organization for Standardization
Provided by IHS under license with ISO
No reproduction or networking permitted without license from IHS
Not for Resale

Annex G
(normative)

Format of Control Field 2

Before recording on the tape, the fields of CF2 shall be formatted as specified by figure G.1.

Bit position	Field name	Length in bits
1 to 8	Block Offset, bits 17 to 24	8
9	Entity Offset, bit 5	1
10 to 12	These bits shall be set to ZERO	3
13 to 16	Entity Offset, bits 1 to 4	4
17 to 24	Block Offset, bits 1 to 8	8
25 to 32	Block Offset, bits 9 to 16	8
33 to 40	Envelope First Object Number, bits 17 to 24	8
41 to 48	Envelope First Object Number, bits 25 to 32	8
49 to 56	Envelope First Object Number, bits 1 to 8	8
57 to 64	Envelope First Object Number, bits 9 to 16	8
65 to 72	Entity Number, bits 1 to 8	8
73	First Block of a Record	1
74 and 75	These bits shall be set to ZERO	2
76 to 80	Entity Size	5
81 to 88	Envelope Number, bits 1 to 8	8
89 to 96	Envelope Number, bits 9 to 16	8
97 to 104	Random Tag, bits 9 to 16	8
105 to 112	Random Tag, bits 17 to 24	8
113	K Bit	1
114 to 120	Logical Track Number	7
121 to 128	Random Tag, bits 1 to 8	8

Figure G.1 — Format of CF2

© ISO/IEC 2000 – All rights reserved

Copyright International Organization for Standardization
Provided by IHS under license with ISO
No reproduction or networking permitted without license from IHS
Not for Resale

Annex H
(informative)

Recommendations for transportation

H.1 Environment

It is recommended that during transportation the cartridges are kept within the following conditions:

H.1.1 Unrecorded cartridges

Temperature : - 23 °C to 48 °C
Relative humidity : 5 % to 100 %
Duration : 10 consecutive days max.

There shall be no condensation in or on the cartridge.

H.1.2 Recorded cartridges

Temperature : 5 °C to 32 °C
Relative humidity : 5 % to 80 %
There shall be no condensation in or on the cartridge.

H.2 Hazards

Transportation of recorded cartridges involves three basic potential hazards.

H.2.1 Impact loads and vibration

The following recommendations should minimize damage during transportation.

i. Avoid mechanical loads that would distort the cartridge shape.

ii. Avoid dropping the cartridge more than 1,0 m.

iii. Cartridges should be fitted into a rigid box containing adequate shock-absorbent material.

iv. The final box must have a clean interior and construction that provides sealing to prevent the ingress of dirt and water.

v. The orientation of the cartridges within the final box should be such that the axes of the hubs are horizontal.

vi. The final box should be clearly marked to indicate its correct orientation.

H.2.2 Extremes of temperature and humidity

i. Extreme changes in temperature and humidity should be avoided whenever possible.

ii. Whenever a cartridge is received it should be conditioned in the operating environment for a period of at least 24 h.

H.2.3 Effects of stray magnetic fields

A nominal spacing of not less than 80 mm should exist between the cartridge and the outer surface of the shipping container. This should minimize the risk of corruption.

--`,,```,,,,````-`-`,,`,,`,`,,`---

© ISO/IEC 2000 – All rights reserved
Copyright International Organization for Standardization
Provided by IHS under license with ISO
No reproduction or networking permitted without license from IHS
Not for Resale

Annex J
(informative)

Inhibitor tape

Any tape that reduces the performance of the tape drive or other tapes is called an inhibitor tape. Certain tape characteristics can contribute to poor tape drive performance. These characteristics include: high abrasivity, high static friction to tape path components, poor edge conditions, excessive tape wear debris, interlayer slippage, transfer of oxide coating to the back of the next tape layer, separation of tape constituents causing deposits that may lead to tape sticking or poor performance of other tapes. Tapes that have these characteristics may not give satisfactory performance and can result in excessive errors.

Tapes to be used in this cartridge should not be inhibitor tapes.

© ISO/IEC 2000 – All rights reserved

Copyright International Organization for Standardization
Provided by IHS under license with ISO
No reproduction or networking permitted without license from IHS
Not for Resale

Annex K
(informative)

Recommendations on tape durability

The durability/reliability test assesses the ability of the tape to resist the wearing action encountered while cycling the tape on a tape drive. This is not a test for end of life for the tape or for the ability of the drive to recover data from erroneous blocks.

When delivered from the supplier the tape of a new cartridge should meet the following requirements.

Testing and measurements performed on the cartridge using an appropriate drive are described below. The test must be performed in the operating environment (see 6.2) for the tape and the tape drive.

K.1 The durability/reliability is the ability of the tape to withstand the wearing action encountered during repeated access to a file of data. A permanent missing pulse is one that persists for ten consecutive read passes.

K.2 If after 20 000 passes, 3 blocks of one of 10 Entities are found in error, the tape is considered as having failed to pass the test. An error means that all three blocks have had at least one missing pulse each.

K.3 If after 250 000 passes, 5 blocks of one of 10 Entities are found in error, the tape is considered as having failed to pass the test. An error means that all 5 blocks have had at least one missing pulse each.

K.4 Procedure

Ensure the tape drive is clean before starting this test.

As a test sample, use a minimum of four cartridges. The test area should consist of at least 1 m of tape or 10 Entities.

Each test cycle consists of starting at the beginning of the test area and accessing each record in the test area before returning to the beginning of the test area. Seven attempts to read should be made for each missing pulse before a missing pulse zone is logged.

Tape path cleaning between passes is not permitted for this test.

© ISO/IEC 2000 – All rights reserved
Copyright International Organization for Standardization
Provided by IHS under license with ISO
No reproduction or networking permitted without license from IHS
Not for Resale

Annex L
(informative)

Handling guidelines

L.1 General

L.1.1 Do not carry cartridges loosely in a container that would submit cartridges to unnecessary physical shock.

L.1.2 Leave cartridges in protective case until ready for use in tape unit.

L.1.3 Avoid unnecessary opening of cartridge lid exposing tape to possible contamination or physical damage or both. Do not allow direct contact with tape.

L.1.4 Do not expose the tape cartridge to moisture or direct sunlight.

L.1.5 Maintain a clean operating, working and storage environment.

L.1.6 Do not place cartridges on or near devices that may produce a magnetic field.

L.2 Labels

L.2.1 Use labels provided by the cartridge supplier. Other labelling techniques may interfere with normal cartridge operation.

L.2.2 Do not use graphite pencils, water soluble felt pens, or other debris-producing writing instruments on labels. Never erase a label - replace it.

L.3 Storage

The protective case containing the cartridge is to be stored vertically.

© ISO/IEC 2000 – All rights reserved

Copyright International Organization for Standardization
Provided by IHS under license with ISO
No reproduction or networking permitted without license from IHS
Not for Resale

ICS 35.220.23

Price based on 55 pages

© ISO/IEC 2000 – All rights reserved

Copyright International Organization for Standardization
Provided by IHS under license with ISO
No reproduction or networking permitted without license from IHS

Not for Resale