INTERNATIONAL STANDARD

ISO/IEC 15757

First edition
1998-07-15

Information technology — Data interchange on 8 mm wide magnetic tape cartridge — Helical scan recording — DA-2 format

Technologies de l'information — Échange de données sur cartouche de bande magnétique de 8 mm *de large — Enregistrement par balayage en spirale — Format DA-2*

Reference number
ISO/IEC 15757:1998(E)

Copyright International Organization for Standardization
Provided by IHS under license with ISO
No reproduction or networking permitted without license from IHS

Not for Resale

Contents

Section 1 - General 1

1 Scope 1

2 Conformance 1
2.1 Magnetic tape cartridges 1
2.2 Generating drive 1
2.3 Receiving drive 1

3 Normative references 1

4 Definitions 1
4.1 a.c. erase: 2
4.2 algorithm 2
4.3 append point 2
4.4 Average Signal Amplitude 2
4.5 azimuth 2
4.6 back surface 2
4.7 bit cell 2
4.8 byte 2
4.9 cartridge 2
4.10 Channel bit 2
4.11 Cluster 2
4.12 Cyclic Redundancy Check (CRC) character 2
4.13 Digital Sum Variation (DSV) 2
4.14 Error Correcting Code (ECC) 2
4.15 File Mark 2
4.16 flux transition spacing 2
4.17 Logical Beginning of Partition (LBOP) 2
4.18 Logical Block 2
4.19 magnetic tape 2

© ISO/IEC 1998

All rights reserved. Unless otherwise specified, no part of this publication may be reproduced or utilized in any form or by any means, electronic or mechanical, including photocopying and micro-film, without permission in writing from the publisher.

ISO/IEC Copyright Office • Case postale 56 • CH-1211 Genève 20 • Switzerland

Printed in Switzerland

Copyright International Organization for Standardization
Provided by IHS under license with ISO
No reproduction or networking permitted without license from IHS Not for Resale

4.20 Master Standard Reference Tape **2**
4.21 Partition **2**
4.22 Physical Beginning of Partition (PBOP) **2**
4.23 Physical Beginning of Tape (PBOT) **2**
4.24 Physical End of Partition (PEOP) **2**
4.25 Physical End of Tape (PEOT) **2**
4.26 physical recording density **2**
4.27 Read Back Check (RBC) **2**
4.28 Reference Field **2**
4.29 Secondary Standard Reference Tape (SSRT) **2**
4.30 Set Mark **3**
4.31 Standard Reference Amplitude (SRA) **3**
4.32 Standard Reference Current (Ir) **3**
4.33 Tape Reference Edge **3**
4.34 Test Recording Current (TRC) **3**
4.35 Track **3**
4.36 Typical Field **3**

5 Conventions and Notations **3**
5.1 Representation of numbers **3**
5.2 Names **3**
5.3 Reserved fields **3**

6 Acronyms **3**

7 Environment and Safety **4**
7.1 Testing environment **4**
7.2 Operating environment **4**
7.3 Storage environment **4**
7.4 Transportation **4**
7.5 Safety **4**
7.6 Flammability **4**

Section 2 - Requirements for the case **5**

8 Dimensional and mechanical characteristics of the case **5**
8.1 General **5**
8.2 Overall dimension **5**
8.3 Holding areas **6**
8.4 Cartridge insertion **6**
8.5 Window **7**
8.6 Loading grips **7**
8.7 Label areas **7**
8.8 Datum areas and datum holes **7**
8.9 Support areas **8**
8.10 Recognition holes **9**
8.11 Write-inhibit hole **9**

--`,,```,,,,````-`-`,,`,,`,`,,`---

Copyright International Organization for Standardization
Provided by IHS under license with ISO
No reproduction or networking permitted without license from IHS Not for Resale

8.12 Pre-positioning surfaces **10**
8.13 Cartridge lid **10**
8.14 Cartridge reel lock **11**
8.15 Reel access holes **12**
8.16 Interface between the reels and the drive spindles **12**
8.17 Light path **13**
8.18 Position of the tape in the case **14**
8.19 Tape path zone **14**
8.20 Tape access cavity **14**
8.21 Tape access cavity clearance requirements **15**

Section 3 - Requirements for the Unrecorded Tape **31**

9 Mechanical, physical and dimensional characteristics of the tape **31**
9.1 Materials **31**
9.2 Tape length **31**
9.2.1 Length of magnetic tape **31**
9.2.2 Length of leader and trailer tapes **31**
9.2.3 Splicing tape **31**
9.3 Width **31**
9.3.1 Width of magnetic, leader and trailer tape **31**
9.3.2 Width and position of splicing tape **31**
9.4 Discontinuities **31**
9.5 Thickness **31**
9.5.1 Thickness of magnetic tape **31**
9.5.2 Thickness of leader and trailer tape **31**
9.5.3 Thickness of splice tape **31**
9.6 Longitudinal curvature **32**
9.7 Cupping **32**
9.8 Coating adhesion **32**
9.9 Layer-to-layer adhesion **33**
9.10 Tensile strength **33**
9.10.1 Breaking strength **33**
9.10.2 Yield strength **33**
9.11 Residual elongation **33**
9.12 Electrical resistance of the recording surface **34**
9.13 Tape winding **34**
9.14 Light transmittance of tape **34**
9.15 Data cartridge recognition stripe **34**

10 Magnetic recording characteristics **35**
10.1 Test conditions **35**
10.2 Typical Field **35**
10.3 Signal Amplitude **35**
10.4 Resolution **35**
10.5 Narrow-band Signal-to-Noise Ratio **36**
10.6 Ease of erasure **36**

Copyright International Organization for Standardization
Provided by IHS under license with ISO
No reproduction or networking permitted without license from IHS Not for Resale

10.7 Tape quality **36**
10.7.1 Missing pulses **36**
10.7.2 Missing pulse zone **36**
10.7.3 Overwrite **36**

Section 4 - Requirements for an Interchanged Tape **37**

11 Format of a track pair **37**
11.1 General **37**
11.2 Physical block format **38**
11.2.1 General **38**
11.2.2 Common header fields **39**
11.2.3 Data Block **40**
11.2.4 Erase Block **41**
11.2.5 Diagnostic Block **41**
11.2.6 Physical Beginning of Partition (PBOP) Block **41**
11.2.7 Long File Mark Block **42**
11.2.8 Short File Mark Block **42**
11.2.9 Logical Beginning of Partition (LBOP) Block **43**
11.2.10 Set Mark Block **44**
11.2.11 Gap Block **45**
11.2.12 End of Data (EOD) Block **45**
11.2.13 Recorded patterns **45**
11.3 Search field format **46**
11.3.1 Search field data **46**
11.3.2 Search field ECC **47**
11.3.3 Search field recording patterns **48**
11.4 Servo area **49**
11.5 Track layout **50**

12 Method of recording **51**
12.1 Physical Recording Density **51**
12.1.1 Long Term Average Bit Cell Length **51**
12.1.2 Short Term Average Bit Cell Length **52**
12.1.3 Rate of Change **52**
12.2 Bit Shift **52**
12.3 Amplitude of Data Signals **52**

13 Track geometry **52**
13.1 General **52**
13.2 Average track pitch - C **52**
13.3 Track pitch variation **53**
13.4 Track width - B **53**
13.5 Track angle - A **53**
13.6 Track length -E **53**
13.7 Guard band - F **53**
13.8 Azimuth angles **53**

--`,,```,,,,````-`-`,,`,,`,`,,`---

Copyright International Organization for Standardization
Provided by IHS under license with ISO
No reproduction or networking permitted without license from IHS Not for Resale

13.9 Track linearity **53**

14 Layout of a tape **53**
14.1 General **53**
14.2 Tape History Log (THL) **54**
14.3 Physical Beginning of Partition **54**
14.4 Logical Beginning of Partition **54**
14.5 Data area **54**
14.5.1 General **54**
14.5.2 Short File Mark **54**
14.5.3 Long File Mark **54**
14.5.4 Set Mark **54**
14.6 End of Data **54**
14.7 Physical End of Partition (PEOP) **54**

Annexes

A - Measurement of Light Transmittance of Tape and Leaders **55**

B - Measurement of bit shift **58**

C - Representation of 8-bit bytes by 10-bit patterns **60**

D - Generation of Data Area CRC **67**

E - Generation of ECC **68**

F - Generation of Logical Block CRC **70**

G - Generation of Hamming Code ECC **71**

H - Generation of Search Field CRC **72**

J - Randomization **73**

K - Recommendations for transportation **74**

Copyright International Organization for Standardization
Provided by IHS under license with ISO
No reproduction or networking permitted without license from IHS Not for Resale

Foreword

ISO (the International Organization for Standardization) and IEC (the International Electrotechnical Commission) form the specialized system for worldwide standardization. National bodies that are members of ISO or IEC participate in the development of International Standards through technical committees established by the respective organization to deal with particular fields of technical activity. ISO and IEC technical committees collaborate in fields of mutual interest. Other international organizations, governmental and non-governmental, in liaison with ISO and IEC, also take part in the work.

In the field of information technology, ISO and IEC have established a joint technical committee, ISO/IEC JTC 1. Draft International Standards adopted by the joint technical committee are circulated to national bodies for voting. Publication as an International Standard requires approval by at least 75 % of the national bodies casting a vote.

International Standard ISO/IEC 15757 was prepared by ECMA (as ECMA-249) and was adopted, under a special “fast-track procedure”, by Joint Technical Committee ISO/IEC JTC 1, *Information technology*, in parallel with its approval by national bodies of ISO and IEC.

Annexes A to J form an integral part of this International Standard. Annex K is for information only.

Copyright International Organization for Standardization
Provided by IHS under license with ISO
No reproduction or networking permitted without license from IHS
Not for Resale

Copyright International Organization for Standardization
Provided by IHS under license with ISO
No reproduction or networking permitted without license from IHS
Not for Resale

Information technology — Data interchange on 8 mm wide magnetic tape cartridge — Helical scan recording — DA-2 format

Section 1 - General

1 Scope

This International Standard specifies the physical and magnetic characteristics of a 8 mm wide magnetic tape cartridge to enable physical interchange of such cartridges between drives. It also specifies the quality of the recorded signals, the recording method and the recorded format, thereby allowing data interchange between drives by means of such magnetic tape cartridges.

Information interchange between systems also requires, at a minimum, agreement between the interchange parties upon the interchange code(s) and the specifications of the structure and labelling of the information on the interchanged cartridge.

2 Conformance

2.1 Magnetic tape cartridges

A magnetic tape cartridge shall be in conformance with this International Standard if it satisfies all mandatory requirements of this International Standard throughout the extent of the tape.

2.2 Generating drive

A drive generating a magnetic tape cartridge for interchange shall be entitled to claim conformance with this International Standard if all the recordings that it makes on a tape meet the mandatory requirements of this International Standard. A claim of conformance shall state whether or not one or more registered compression algorithm(s) are implemented within the system to process data from the host prior to allocating data to physical blocks.

2.3 Receiving drive

A system receiving a magnetic tape cartridge for interchange shall be entitled to claim conformance with the International Standard if it is able to handle any recording on this tape according to this International Standard. A receiving drive shall be able to recognize the use of a data compression algorithm and make the algorithm registration number available to the host.

3 Normative references

The following standards contain provisions which, through reference in this text, constitute provisions of this International Standard. At the time of publication, the editions indicated were valid. All standards are subject to revision, and parties to agreements based on this International Standard are encouraged to investigate the possibility of applying the most recent editions of the standards indicated below. Members of IEC and ISO maintain registers of currently valid International Standards.

ISO 527-1:1993, *Plastics — Determination of tensile properties — Part 1: General principles.*

ISO 1302:1992, *Technical drawings — Method of indicating surface texture.*

ISO/IEC 11576:1995, *Information technology — Procedure for the registration of algorithms for the lossless compression of data.*

IEC 950:1991, *Safety of information technology equipment.*

4 Definitions

For the purposes of this International Standard, the following definitions apply.

Copyright International Organization for Standardization
Provided by IHS under license with ISO
No reproduction or networking permitted without license from IHS
Not for Resale

4.1 a.c. erase: A process of erasure utilizing alternating magnetic fields of decaying intensity.

4.2 algorithm: A set of rules for transforming the logical representation of data.

4.3 append point: The first physical block on the first track 1 following the two gap stripes that precede a Long File Mark, Set Mark, or EOD and follow the last track pair containing any portion of a logical block

4.4 Average Signal Amplitude: The average peak-to-peak value of the signal of a read head measured over a minimum of 3 000 flux transitions, exclusive of missing pulses.

4.5 azimuth: The angular deviation, in degrees of arc, of the recorded flux transitions on a track from a line normal to the track centreline.

4.6 back surface: The surface of the tape opposite to the magnetic coating used to record data.

4.7 bit cell: A distance along the track allocated for the recording of a channel bit.

4.8 byte: An ordered set of bits acted upon as a unit.

4.9 cartridge: A case containing magnetic tape stored on twin reels.

4.10 Channel bit: A bit after 8-10 transformation.

4.11 Cluster: A group of sequential blocks of the same block type.

4.12 Cyclic Redundancy Check (CRC) character: A character derived from information contained in data bytes that are used for error detection.

4.13 Digital Sum Variation (DSV): The integrated value of Channel bits taken from the beginning of each track counting a ONE as +1 and a ZERO as -1.

4.14 Error Correcting Code (ECC): A mathematical procedure yielding bytes used for the detection and correction of errors.

4.15 File Mark: A mark recorded on the tape at the request of the host system to separate files or to provide a splice point. This format provides for Long or Short File Marks.

4.16 flux transition spacing: The distance along a track between successive flux transitions.

4.17 Logical Beginning of Partition (LBOP): The point in a partition where a recording of data for interchange commences.

4.18 Logical Block: Information (data, file marks, or set marks) sent from the host to the tape drive to be recorded.

4.19 magnetic tape: A tape that accepts and retains magnetic signals intended for input, output, and storage of data for information processing.

4.20 Master Standard Reference Tape: A tape selected as the standard for Signal Amplitude, Typical Field, Overwrite and Resolution.

NOTE - The Master Standard Reference Tape has been established by Pericomp Corporation.

4.21 Partition: A formatted length of tape used to record data. Partitions are used to divide the tape into shorter updatable areas.

4.22 Physical Beginning of Partition (PBOP): The point along the length of tape at which a partition begins.

4.23 Physical Beginning of Tape (PBOT): The transition from the tape leader to the opaque area of the splice by which the translucent leader tape is joined to the magnetic tape.

4.24 Physical End of Partition (PEOP): The point along the length of tape at which a partition ends.

4.25 Physical End of Tape (PEOT): The transition from the opaque area of the splice to the translucent trailer tape.

4.26 physical recording density: The number of recorded flux transitions per unit length of track, expressed in flux transitions per millimetre (ftpmm).

4.27 Read Back Check (RBC): A Read Back Check occurs when, while writing, the data is read by trailing heads and checked for errors.

4.28 Reference Field: The Typical Field of the Master Standard Reference Tape.

4.29 Secondary Standard Reference Tape (SSRT): A tape the performance of which is known and stated in relation to that of the Master Standard Reference Tape.

NOTE - Secondary Standard Reference Tapes can be ordered under the Part Number SSRT/M.AME/PC97, from Pericomp Corporation, 14 Huron Drive, Natick, MA 01760, USA.

--`,,```,,,,````-`-`,,`,,`,`,,`---
Copyright International Organization for Standardization
Provided by IHS under license with ISO
No reproduction or networking permitted without license from IHS
Not for Resale

In principle, such tapes will be available for a period of 10 years from the first edition of this International Standard. However, by agreement between ISO/IEC JTC 1 and Pericomp, this period may be shortened or extended to take account of demand for such tapes.

It is intended that these be used for calibrating Tertiary Reference Tapes for use in routine calibration.

4.30 Set Mark: A mark recorded on the tape at the request of the host system to separate a set of data or to provide a splice point.

4.31 Standard Reference Amplitude (SRA): The Average Signal Amplitude derived from the Master Standard Reference Tape, using the Test Recording Current at 3 819 ftpmm.

4.32 Standard Reference Current (Ir): The current that produces the Reference Field.

4.33 Tape Reference Edge: The lower edge of tape as seen when viewing the recording surface of the tape with the supply reel to the observer's right.

4.34 Test Recording Current (TRC): The current used to record the SRA. The TRC is 1,5 times the Standard Reference Current.

4.35 Track: A diagonally positioned area on the tape along which a series of magnetic transitions may be recorded.

4.36 Typical Field: In the plot of the Average Signal Amplitude against the recording field at the physical recording density of 3 819 ftpmm, the minimum field that causes an Average Signal Amplitude equal to 90% of the maximum Average Signal Amplitude.

5 Conventions and Notations

5.1 Representation of numbers

- A measured value is rounded off to the least significant digit of the corresponding specified value. It implies that a specific value of 1,26 with a positive tolerance of +0,01, and a negative tolerance of -0,02 allows a range of measured values from 1,235 to 1,275.
- Letters and digits in parentheses represent numbers in hexadecimal notation.
- The setting of a bit is denoted by ZERO or ONE.
- Numbers in binary notation and bit combinations are represented by strings of digits 0 and 1.
- Numbers in binary notation and bit combinations are shown with the most significant byte to the left, and with the most significant bit in each byte to the left.
- Negative values of numbers in binary notation are given in Two's complement.
- In each field the data is processed so that the most significant byte (byte 0) is processed first. Within each byte the most significant bit (numbered 7 in an 8-bit byte) is processed first, least significant bit is numbered 0 and is processed last. This order of processing applies also to the data input to the Error Detection and Correction circuits and to their output, unless otherwise stated.

5.2 Names

The names of entities, e.g. specific tracks, fields, etc., are given with a capital initial.

5.3 Reserved fields

Fields marked resv are reserved for future format extensions and all bits in these fields shall be set to ZERO.

6 Acronyms

CRC Cyclic Redundancy Check
BID Block Identifier
ECC Error Correction Code
EOD End of Data
FID File Identifier
LBOP Logical Beginning of Partition
LID Logical Block Identifier
lsb Least Significant Bit
LSB Least Significant Byte
msb Most Significant Bit
MSB Most significant Byte
PBOP Physical Beginning of Partition

Copyright International Organization for Standardization
Provided by IHS under license with ISO
No reproduction or networking permitted without license from IHS Not for Resale

PBOT Physical Beginning of Tape
PEOP Physical End of Partition
PEOT Physical End of Tape
PID Physical Identifier
RBC Read Back Check
SID Stream Identifier
SMID Set Mark Identifier
SRA Standard Reference Amplitude
SSRT Secondary Standard Reference Tape
TRC Test Recording Current

7 Environment and Safety

The conditions specified below refer to the ambient conditions immediately surrounding the cartridge.

Cartridges exposed to environments outside these limits may still be able to function usefully; however, such exposure may cause permanent damage.

7.1 Testing environment

Unless otherwise specified, tests and measurements made on the cartridge to check the requirements of this International Standard shall be carried out under the following conditions

temperature: 23°C ± 2°C

relative humidity: 40 % to 60 %

conditioning period
before testing: 24 h

7.2 Operating environment

Cartridges used for data interchange shall be capable of operating under the following conditions

temperature: 5°C to 45°C

relative humidity: 20 % to 80 %

wet bulb temperature: 26°C max.

The average temperature of the air immediately surrounding the tape shall not exceed 45°C.

Conditioning before operating: If a cartridge has been exposed during storage and/or transportation to conditions outside the above values, before use the cartridge shall be conditioned in the operating environment for a time at least equal to the period during which it has been out of the operating environment, up to a maximum of 24 h..

7.3 Storage environment

The following conditions shall be observed during storage

temperature: 5°C to 32°C

relative humidity: 20 % to 60 %

stray magnetic field: shall not exceed 4 000 A/m at any point on the tape.

There shall be no deposit of moisture on or in the cartridge.

7.4 Transportation

Recommended limits for the environments to which a cartridge may be subjected during transportation, and the precautions to be taken to minimize the possibility of damage, are provided in annex K.

7.5 Safety

The cartridge shall satisfy the safety requirements of Standard IEC 950 when used in the intended manner or in any foreseeable use in an information processing system.

7.6 Flammability

The cartridge shall be made from materials that comply with the flammability class for HB materials, or better, as specified in Standard IEC 950.

--`,,```,,,,````-`-`,,`,,`,`,,`---
Copyright International Organization for Standardization
Provided by IHS under license with ISO
No reproduction or networking permitted without license from IHS Not for Resale

Section 2 - Requirements for the case

8 Dimensional and mechanical characteristics of the case

8.1 General

The cartridge shall consist of the following elements:

- a case
- recognition holes
- a write inhibit mechanism
- twin reels containing magnetic tape
- a locking mechanism for the reels

Dimensional characteristics are specified for those parameters deemed to be mandatory for interchange and compatible use of the cartridge. Where there is freedom, of design, only the functional characteristics of the elements described are indicated. In the figures a typical implementation is represented in third angle projections.

Figure 1 is a perspective view of the cartridge seen from the top.
Figure 2 is a perspective view of the cartridge seen from the bottom.
Figure 3 is a perspective view of Reference Planes X, Y and Z.
Figure 4 shows the front side with the lid closed.
Figure 5 shows the left side with the lid closed.
Figure 6 shows the top side with the lid closed.
Figure 7 shows the right side with the lid closed.
Figure 8 shows the rear side with the lid closed.
Figure 9 shows the bottom side, datum and support areas.
Figure 10 shows the bottom side with the lid removed.
Figure 11 is the enlarged view of the datum and recognition holes.
Figure 12 are the cross-sections through the light path holes, the recognition holes and the write-inhibit hole.
Figure 13 shows details of the lid when closed, rotating and open.
Figure 14 shows the details of the lid release insertion channel.
Figure 15 shows the lid lock release requirements.
Figure 16 shows the reel lock release requirements.
Figure 17 shows the reel unlock force direction.
Figure 18 shows the lid release force direction.
Figure 19 shows the lid opening force direction.
Figure 20 shows the light path and light window.
Figure 21 shows the internal tape path and light path.
Figure 22 shows the cartridge reel and a cross-section view of the cartridge reel.
Figure 23 is a cross-section view of the cartridge reel interface with the drive spindle.
Figure 24 shows the tape access cavity clearance requirements.

The dimension are referred to three orthogonal Reference Planes X, Y and Z (see figure 3).

Plane X is perpendicular to Plane Z and passes through the centres of the Datum Holes A and B.

Plane Y is perpendicular to Plane X and Plane Z and passes through the centre of Datum Hole A.

Datum area A, B and C shall lie in Plane Z.

8.2 Overall dimension (figures 5 and 6)

The length of the case shall be

$$l_1 = 62{,}5 \text{ mm} \pm 0{,}3 \text{ mm}$$

The width of the case shall be

$$l_2 = 95{,}0 \text{ mm} \pm 0{,}2 \text{ mm}$$

The distance from the top of the case to Plane Z shall be

$$l_3 = 15{,}0 \text{ mm} \pm 0{,}2 \text{ mm}$$

The distance from the rear side to Plane X shall be

$$l_4 = 47{,}35 \text{ mm} \pm 0{,}15 \text{ mm}$$

Copyright International Organization for Standardization
Provided by IHS under license with ISO
No reproduction or networking permitted without license from IHS Not for Resale

The distance from the right side to Plane Y shall be

l_5 = 13,0 mm ± 0,1 mm

8.3 Holding areas

The holding areas shown hatched in figure 6 shall be the areas along which the cartridge shall be held down when inserted into the drive. The distance of the holding areas from Plane X shall be

l_6 = 12,0 mm max.

The width when measured from the edge of the case shall be

l_7 = 3,0 mm min.

8.4 Cartridge insertion

The cartridge shall have asymmetrical features to prevent insertion into the drive in other than the correct orientation. These consist of an insertion channel, a recess and an incline.

The insertion channel (figures 4 and 14) shall provide for an unobstructed path, when the lid is closed and locked, to unlock the lid. The distance of the insertion channel from Plane Y shall be

l_8 = 79,7 mm ± 0,2 mm

There shall be a chamfer at the beginning of the insertion channel defined by

l_9 = 1,0 mm ± 0,1 mm

l_{16} = 1,5 mm ± 0,1 mm

An additional chamfer further into the insertion channel shall be defined by

l_{10} = 0,7 mm ± 0,1 mm

l_{17} = 1,0 mm ± 0,1 mm

l_{18} = 3,8 mm ± 0,1 mm

The innermost width of the insertion channel shall be

l_{11} = 1,0 mm min.

The thickness of the lid shall be

l_{12} = 1,2 mm ± 0,1 mm

There shall be a chamfer on the lid defined by

l_{13} = 0,8 mm ± 0,1 mm

l_{14} = 1,2 mm ± 0,1 mm

The lid shall extend from the case a distance of

l_{15} = 0,5 mm ± 0,1 mm

The distance from the left side of the case to the lid lock shall be

l_{19} = 0,2 mm ± 0,2 mm

The height of the insertion area shall be

l_{20} = 2,3 mm min.

l_{21} = 2,5 mm $^{+\ 0,2\ \text{mm}}_{-\ 0,0\ \text{mm}}$

The recess is located on the right side of the cartridge. The position and dimensions (figures 5, 7 and 10) shall be defined by

l_{22} = 7,5 mm max.

l_{23} = 11,0 mm ± 0,2 mm

l_{24} = 1,5 mm ± 0,1 mm

--`,,```,,,,````-`-`,,`,,`,`,,`---

Copyright International Organization for Standardization
Provided by IHS under license with ISO
No reproduction or networking permitted without license from IHS Not for Resale

The depth of the recess shall be

l_{25} = 1,5 mm ± 0,1 mm

The incline (figure 13a) is part of the lid structure. The distance of the incline from Plane X shall be defined by

l_{26} = 7,7 mm $^{+\ 0,0\ mm}_{-\ 2,5\ mm}$

The angle of the incline shall be

$a_1 = 20^o \pm 1^o$

The incline shall end when it intersects the radius r_3 (see clause 8.13).

8.5 Window (figure 1)

A window may be provided on the top side so that parts of the reels are visible. The window, if provided, shall not extend beyond the height of the cartridge.

8.6 Loading grips (figures 5 and 7)

The cartridge shall have recessed loading grips on each side to aid an automatic loading mechanism.

The distance from Plane X to the centreline of the loading grip shall be

l_{28} = 39,35 mm ± 0,20 mm;

The distance from Plane Z on the bottom side and from the top side shall be

l_{29} = 1,5 mm ± 0,1 mm;

The width of the indent shall be

l_{30} = 5,0 mm ± 0,3 mm;

The depth of the indent shall be

l_{31} = 2,0 mm ± 0,2 mm;

and the angle of the indent

$a_2 = 90^o \pm 5^o$.

8.7 Label areas (figures 6 and 8)

A portion of the rear side of the cartridge and a portion of the top side of the cartridge may be used for labels. The position and the size of the labels shall not interfere with the operation or clearance requirements of the cartridge component parts.

The area used for labels on the top side shall not extend beyond the inner edge of the holding areas defined by l_6 and l_7.

The position and dimensions of the label area on the rear side shall be defined by

l_{32} = 0,5 mm min.

l_{33} = 1,5 mm min.

l_{34} = 80,0 mm max.

The depth of the label areas shall be 0,3 mm max.

8.8 Datum areas and datum holes

The annular datum areas A, B and C shall lie in Plane Z (see figures 9, 10 and 11). They determine the vertical position of the cartridge in the drive. Each shall have a diameter d_1 equal to 6,0 mm ± 0,1 mm and be concentric with the respective datum hole.

The centres of datum holes A and B lie in Plane X.

The centre of the circular datum hole A shall be at the intersection of planes X and Y (see figure 10).

The distance from the centre of datum hole B to Plane Y (see figure 9) shall be

l_{35} = 68,0 mm ± 0,1 mm

The distance from the centre of the circular datum hole C to Plane Y (see figure 11) shall be

l_{36} = 10,20 mm ± 0,05 mm

--`,,```,,,,````-`-`,,`,,`,`,,`---
Copyright International Organization for Standardization
Provided by IHS under license with ISO
No reproduction or networking permitted without license from IHS
Not for Resale

The distance from the centre of datum hole D to Plane Y (see figure 11) shall be

l_{37} = 79,2 mm ± 0,2 mm

The distance from the centres of datum holes C and D to Plane X (see figure 10) shall be

l_{38} = 36,35 mm ± 0,08 mm

The thickness of the case in the datum areas shall be

l_{39} = 1,2 mm ± 0,1 mm

The diameter at the bottom of datum hole A and datum hole C shall be

l_{40} = 2,6 mm min.

The depth of the holes shall be

l_{42} = 4,0 mm min.

The upper diameter of datum holes A and C shall be

l_{44} = 3,00 mm $^{+\ 0,05\ mm}_{-\ 0,00\ mm}$

This diameter shall be to a depth of

l_{41} = 1,5 mm min.

There shall be a chamfer around the outside of datum hole A and datum hole C defined by

l_{43} = 0,3 mm max.

$a_3 = 45^o \pm 1^o$

The width at the bottom of datum holes B and D shall be l_{40}.

The depth of the holes shall be l_{42}.

The dimensions at the top of the holes shall be

l_{45} = 3,5 mm ± 0,1 mm

l_{46} = 3,00 mm $^{+\ 0,05\ mm}_{-\ 0,00\ mm}$

r_1 = 1,75 mm ± 0,05 mm

This width shall be to a depth l_{41}.

There shall be a chamfer around the outside of datum holes B and D defined by l_{43} and a_3.

8.9 Support areas (figure 9)

The cartridge Support areas are shown shaded in figure 9. Support areas A', B' and C' shall be coplanar with Datum areas A, B and C, respectively, within 0,1 mm. Support area D' shall be coplanar with Plane Z within 0,15 mm.

The areas within l_{49} of the edge of the cartridge shall be recessed from the Support Areas.

l_{49} = 0,5 mm ± 0,1 mm

Support areas A' and B' shall extend from Plane X towards the front of the case a distance

l_{47} = 10,0 mm ± 0,1 mm

Support areas A' and B' shall extend from the centre of the Datum holes toward the outside of the case a distance l_{47}.

Support areas A' and B' shall extend from the centre of the Datum holes toward the inside of the case a distance of

l_{48} = 11,0 mm ± 0,1 mm

Support areas A' and B' shall extend from Plane X toward the rear of the case a distance of

l_{50} = 7,0 mm ± 0,1 mm

--`,,```,,,,````-`-`,,`,,`,`,,`---
Copyright International Organization for Standardization
Provided by IHS under license with ISO
No reproduction or networking permitted without license from IHS
Not for Resale

The distance of Support areas C' and D' from Plane X shall be

l_{51} = 30,0 mm ± 0,1 mm

The dimensions of Support areas C' and D' shall be defined by l_{47} and

l_{52} = 5,5 mm ± 0,1 mm

l_{53} = 64,5 mm ± 0,2 mm

8.10 Recognition holes (figures 10, 11 and 12)

There shall be 5 recognition holes numbered 1 to 5 as shown in figure 11.

The centre of recognition hole 1 shall be defined by

l_{54} = 43,35 mm ± 0,15 mm

l_{57} = 6,4 mm ± 0,1 mm

The centre of recognition hole 2 shall be defined by l_{54} and l_{57}.

The centre of recognition hole 3 shall be defined by l_{54} and

l_{58} = 79,0 mm ± 0,2 mm

The centre of recognition hole 4 shall be defined by

l_{55} = 3,7 mm ± 0,1 mm

l_{56} = 2,3 mm ± 0,1 mm

The centre of recognition hole 5 shall be defined by l_{55} and l_{56}.

All recognition holes shall have the cross-section E-E and F-F shown in figure 12 and shall have a diameter of 3,0 mm ± 0,1 mm.

The depth of a closed recognition hole below Plane Z shall be

l_{59} = 1,2 $^{+0,3\ mm}_{-0,1\ mm}$

The depth of an open recognition hole below Plane Z shall be

l_{60} = 5,0 mm min.

One of the cross-sections shows a recognition hole closed by a plug. The other shows one hole with the plug punched out and the other hole closed by a plug. These plugs shall withstand an applied force of 0,5 N max. without being punched out.

This International Standard prescribes the following states of these holes.

- Recognition hole 1 shall be open.
- Recognition hole 2 shall be open
- Recognition hole 3 shall be open
- Recognition hole 4 shall be closed.
- Recognition hole 5 shall be closed.

8.11 Write-inhibit hole (figures 11 and 12)

The centre of the Write-inhibit hole shall be defined by l_{54} and

l_{61} = 10,0 mm ± 0,1 mm

The diameter of the hole shall be 3,0 mm ± 0,1 mm.

The depth of a closed Write-inhibit hole below Plane Z shall be l_{59}.

The depth of an open Write-inhibit hole below Plane Z shall l_{60}

When the Write-inhibit hole is open, recording on the tape is inhibited. When it is closed, recording is enabled.

The case may have a movable element allowing the write-inhibit hole to be opened or closed. If present, this element shall be such that the state of the write-inhibit hole shall be visible (see figure 8 as an example). The write-inhibit hole closure shall be constructed to withstand a force of 0,5 N. The force required to open or close the write-inhibit hole shall be between 1 N and 15 N.

--`,,```,,,,````-`-`,,`,,`,`,,`---

Copyright International Organization for Standardization
Provided by IHS under license with ISO
No reproduction or networking permitted without license from IHS Not for Resale

8.12 Pre-positioning surfaces (figures 4 and 10)

These surfaces determine the position of the cartridge when it is inserted into the drive loading slot.

The distance from Plane Z to the surface on which the tape reference edge rests (figure 4) shall be

$$l_{62} = 2{,}4 \text{ mm} \begin{matrix} +\ 0{,}0 \text{ mm} \\ -\ 0{,}1 \text{ mm} \end{matrix}$$

Positioning of the cartridge relative to Plane Y shall be controlled by the surfaces defined by

$l_{63} = 1{,}0 \text{ mm} \pm 0{,}1 \text{ mm}$

$l_{64} = 69{,}0 \text{ mm} \pm 0{,}2 \text{ mm}$

Positioning of the cartridge relative to Plane X shall be controlled by the surfaces defined by

$l_{65} = 14{,}65 \text{ mm} \pm 0{,}10 \text{ mm}$

The position and angle of the chamfer at the edge of this surface shall be defined by

$l_{66} = 13{,}15 \text{ mm} \pm 0{,}10 \text{ mm}$

$a_4 = 45^{o} \pm 1^{o}$

8.13 Cartridge lid (figures 6 and 13)

The cartridge shall have a lid for protection of the tape during handling, storage and transportation. The lid consists of two parts, the main part and an auxiliary part.

The main part rotates around axis A (see figure 13) the position of which is fixed relative to the case.

The location of axis A shall be defined by

$$l_{27} = 0{,}55 \text{ mm} \begin{matrix} +\ 0{,}05 \text{ mm} \\ -\ 0{,}10 \text{ mm} \end{matrix}$$

$l_{67} = 7{,}5 \text{ mm} \pm 0{,}1 \text{ mm}$

The auxiliary part rotates around axis B the position of which is fixed relative to the main part of the lid and moves with it. When the lid is in the closed position, the location of axis B shall be defined by

$l_{68} = 7{,}0 \text{ mm} \pm 0{,}1 \text{ mm}$

$l_{69} = 10{,}1 \text{ mm} \pm 0{,}1 \text{ mm}$

The rotation of the auxiliary part is controlled by a cam at each end to give the path indicated in figure 13.

The auxiliary part, when fully opened, shall allow a clearance of

$l_{70} = 14{,}8 \text{ mm min.}$

$$l_{71} = 11{,}5 \text{ mm} \begin{matrix} +\ 0{,}2 \text{ mm} \\ -\ 0{,}0 \text{ mm} \end{matrix}$$

$l_{72} = 1{,}2 \text{ mm} \pm 0{,}1 \text{ mm}$

When the lid is completely open, neither part shall extend above a plane located l_{73} above and parallel to Plane Z.

$l_{73} = 22{,}3 \text{ mm max.}$

The angle to the bottom of the lid from Plane Z when the lid is completely open shall be

$$a_5 = 85^{o} \begin{matrix} +\ 1^{o} \\ -\ 2^{o} \end{matrix}$$

When the lid is in a partially open position, neither part shall extend above a plane located l_{74} above and parallel to Plane Z.

$l_{74} = 22{,}5 \text{ mm max.}$

The path of the top of the lid as it opens shall be defined by

$r_2 = 14{,}9 \text{ mm max.}$

Copyright International Organization for Standardization
Provided by IHS under license with ISO
No reproduction or networking permitted without license from IHS Not for Resale

The start point of the incline on the case that meets the lid (cross-section B-B in figure 6) shall be defined by

l_{75} = 8,4 mm max.

The height of the lid from Plane Z (figure 13) shall be

l_{76} = 15,2 mm $^{+\ 0,0\ mm}_{-\ 0,5\ mm}$

The front of the lid measured from Plane X shall be

l_{77} = 15,3 mm $^{+\ 0,0\ mm}_{-\ 0,3\ mm}$

The inside of the lid shall provide clearance for the tape defined by

l_{78} = 13,15 mm ± 0,10 mm

The top front of the lid shall have a radius r_3. The centre of the radius shall be axis A.

r_3 = 14,7 mm $^{+\ 0,0\ mm}_{-\ 0,3\ mm}$

The design of the locking mechanism is not specified by this International Standard except that is shall be operated by a release pin in the drive. The lid release mechanism shall be actuated when the drive release pin is in the shaded area (see figure 15) defined by

l_{79} = 2,0 mm ± 0,1 mm

l_{80} = 8,2 mm ± 0,2 mm

l_{81} = 0,7 mm ± 0,2 mm

$a_6 = 30^o \pm 1^o$

The force required to unlock the lid lock shall not exceed 0,25 N in the direction shown in figure 18.

The force required to open the lid shall not exceed 1,0 N in the direction shown in figure 19.

8.14 Cartridge reel lock (figure 16)

The reels shall be locked when the cartridge is removed from the tape drive. The design of the locking mechanism is not specified by this International Standard except that it shall be operated by a release pin in the drive.

The locking mechanism shall be accessed through a rectangular hole in the case (see figure 10) defined by the centreline from Plane Y

l_{82} = 34,5 mm ± 0,1 mm;

the top from Plane X

l_{83} = 35,85 mm ± 0,15 mm;

and

l_{84} = 4,0 mm ± 0,1 mm

l_{85} = 6,5 mm min.

The dimension of the locking mechanism shall be defined by

l_{86} = 3,2 mm $^{+\ 0,3\ mm}_{-\ 0,2\ mm}$

l_{87} = 4,0 mm ± 0,1 mm

$a_7 = 60,0^o \pm 1,0^o$

The reels shall be locked when the operating face of the release pin is located l_{88} from Plane X.

l_{88} = 39,0 mm $^{+\ 2,0\ mm}_{-\ 0,0\ mm}$

Copyright International Organization for Standardization
Provided by IHS under license with ISO
No reproduction or networking permitted without license from IHS Not for Resale

The reels shall be unlocked when the operating face of the release pin is located l_{89} from Plane X.

$$l_{89} = 41{,}75 \text{ mm} \begin{matrix} +\ 0{,}50 \text{ mm} \\ -\ 0{,}00 \text{ mm} \end{matrix}$$

In this position there shall be a clearance of l_{90} between the locking mechanism and the inside of the rear wall of the cartridge.

l_{90} = 0,5 mm min.

The pin used to move the locking mechanism shall penetrate the cartridge a distance of

l_{91} = 7,8 mm max.

The cavity of the locking mechanism shall be defined by

l_{92} = 4,0 mm ± 0,1 mm

r_4 = 0,3 mm max.

The force required to unlock the reel lock in the direction shown in figure 17 shall not exceed 1,0 N.

8.15 Reel access holes (figure 10)

The case shall have two circular reel access holes which shall allow penetration of the drive spindles.

The positions of the access holes shall be defined by

l_{93} = 23,00 mm ± 0,05 mm

l_{94} = 11,40 mm ± 0,05 mm

l_{95} = 46,2 mm ± 0,1 mm

The diameter of the holes shall be

d_2 = 18,80 mm ± 0,05 mm

8.16 Interface between the reels and the drive spindles

The drive spindles (see figures 22 and 23) shall engage the reels in the area defined by

l_{96} = 11,75 mm ± 0,15 mm

l_{97} = 8,30 mm ± 0,05 mm

l_{98} = 0,6 mm ± 0,1 mm

l_{99} = 0,3 mm ± 0,1 mm

l_{100} = 1,10 mm ± 0,05 mm

l_{101} = 0,6 mm max.

l_{102} = 5,4 mm ± 0,1 mm

l_{103} = 4,4 mm ± 0,1 mm

l_{104} = 0,6 mm max.

$$d_4 = 10{,}00 \text{ mm} \begin{matrix} +\ 0{,}08 \text{ mm} \\ -\ 0{,}00 \text{ mm} \end{matrix}$$

d_5 = 16,0 mm max.

$$d_6 = 18{,}0 \text{ mm} \begin{matrix} +\ 0{,}0 \text{ mm} \\ -\ 0{,}1 \text{ mm} \end{matrix}$$

$$d_7 = 16{,}0 \text{ mm} \begin{matrix} +\ 0{,}0 \text{ mm} \\ -\ 0{,}1 \text{ mm} \end{matrix}$$

$$d_8 = 45{,}1 \text{ mm} \begin{matrix} +\ 0{,}0 \text{ mm} \\ -\ 0{,}5 \text{ mm} \end{matrix}$$

+ 0,0 mm

--`,,```,,,,````-`-`,,`,,`,`,,`---

Copyright International Organization for Standardization
Provided by IHS under license with ISO
No reproduction or networking permitted without license from IHS Not for Resale

$d_9 = 45{,}1\ \text{mm}^{-0{,}2\ \text{mm}}$

There shall be a chamfer of the reel driving hole defined by

$l_{105} = 2{,}4\ \text{mm} \pm 0{,}1\ \text{mm}$

$a_9 = 15^{\circ} \pm 1^{\circ}$

There shall be a chamfer at the bottom of the reel on the outside edge defined by

$l_{106} = 0{,}2\ \text{mm max.}$

$a_8 = 45^{\circ} \pm 1^{\circ}$

The position and width of the slots to receive the reel drive spindle shall be defined by

$l_{107} = 2{,}4\ \text{mm}^{+0{,}2\ \text{mm}}_{-0{,}0\ \text{mm}}$

$a_{10} = 60^{\circ} \pm 1^{\circ}$

The teeth in the reel driving hole shall have a radius

$r_5 = 0{,}2\ \text{mm max.}$

The depth l_{108} of the reel driving hole shall be effective to the diameter d_3.

$l_{108} = 9{,}4\ \text{mm min.}$

$d_3 = 6{,}50\ \text{mm}^{+0{,}08\ \text{mm}}_{-0{,}00\ \text{mm}}$

When the tape is loaded in the drive, the position of the tape centre relative to Plane Z shall be

$l_{109} = 7{,}05\ \text{mm} \pm 0{,}10\ \text{mm}$

When the tape is loaded in the drive, the position of the reel relative to Plane Z shall be

$l_{110} = 0{,}6\ \text{mm} \pm 0{,}2\ \text{mm}$

The penetration of the reel drive spindle into the reel shall be defined by

$l_{111} = 7{,}5\ \text{mm max.}$

$l_{112} = 8{,}0\ \text{mm max.}$

$l_{113} = 1{,}20\ \text{mm} \pm 0{,}05\ \text{mm}$

$l_{114} = 1{,}40\ \text{mm} \pm 0{,}05\ \text{mm}$

$a_{11} = 60^{0} \pm 1^{\circ}$

When the cartridge is mounted in the drive and the Support areas are at a distance l_{110} from Plane Z, the reel spring force F shall be 0,6 N ± 0,2 N in the direction shown in figure 23.

8.17 Light path (figures 10, 12, 20 and 21)

A light path shall be provided for sensing the leader and trailer tapes. When the lid is open, an unobstructed light path shall exist from the d_{10} diameter light path hole to the outside of the cartridge via square windows in the light path hole (see cross-section D-D in figure 12) and the light window in the cartridge lid.

The centre of the light path hole shall be defined by l_{82} and

$l_{115} = 8{,}35\ \text{mm} \pm 0{,}10\ \text{mm}$

The diameter of the light path hole shall be

$d_{10} = 6{,}5\ \text{mm}^{+0{,}3\ \text{mm}}_{-0{,}0\ \text{mm}}$

Copyright International Organization for Standardization
Provided by IHS under license with ISO
No reproduction or networking permitted without license from IHS Not for Resale

The light path hole shall have a chamfer defined by

l_{116} = 0,5 mm max.

$a_{12} = 45^{o} \pm 1^{o}$

The position and size of the square window on each side of the light path hole shall be

l_{117} = 6,05 mm ± 0,10 mm

l_{118} = 2,5 mm $^{+\ 0,4\ mm}_{-\ 0,0\ mm}$

The hole shall be deep enough to allow penetration of a light emitter a distance of

l_{119} = 12,5 mm min.

The angle of the light path shall be

$a_{13} = 5,50^{o} \pm 0,25^{o}$

The position and size of the cartridge lid window shall be

l_{120} = 3,8 mm ± 0,1 mm

l_{121} = 2,5 mm $^{+\ 0,4\ mm}_{-\ 0,0\ mm}$

l_{122} = 6,05 mm ± 0,10 mm

8.18 Position of the tape in the case (figure 21)

The tape shall run between two guide surfaces in a plane parallel to Plane X and l_{123} from it.

l_{123} = 10,15 mm ± 0,10 mm

The guide surfaces shall have a radius of r_6 and shall be tangential, as shown in figure 21, to lines tangential to the reel hubs that extend to points outside the case.

r_6 = 3,0 mm ± 0,1 mm

These points shall be defined by

l_{124} = 76,28 mm ± 0,30 mm

l_{125} = 27,15 mm ± 0,20 mm

l_{126} = 31,15 mm ± 0,20 mm

l_{127} = 9,67 mm ± 0,10 mm

8.19 Tape path zone

When the cartridge is inserted into the drive, the tape is pulled outside the case by tape guides and is no longer in contact with the guide surfaces. The tape path zone (see figure 21) of the case is the zone in which the tape shall be able to move freely. This zone shall be maintained for both sides of the case and shall be defined by l_{124} to l_{127} and

l_{128} = 23,0 mm ± 0,1 mm

l_{129} = 0,3 mm min.

l_{130} = 46,2 mm ± 0,2 mm

l_{131} = 11,4 mm ± 0,1 mm

The clearance between the tape and the guides shall be defined by

l_{132} = 0,3 mm min.

8.20 Tape access cavity (figure 10)

When the cartridge is inserted into the drive, tape guides in the drive pull the tape into the drive tape path. The two radii r_7 are centred on Datum holes A and B. The shape and dimensions of the access cavity for these tape guides shall be defined by l_{63} and l_{64}, and the following

r_7 = 2,3 mm ± 0,1 mm

--`,,```,,,,````-`-`,,`,,`,`,,`---

Copyright International Organization for Standardization
Provided by IHS under license with ISO
No reproduction or networking permitted without license from IHS Not for Resale

The two radii r_8 are centred on the centres of the reel access holes.

r_8 = 24,15 mm ± 0,10 mm

l_{133} = 3,85 mm ± 0,10 mm

8.21 Tape access cavity clearance requirements (figure 24)

The case design shall provide clearance for drive tape threading mechanisms and shall be defined by

l_{134} = 1,2 mm max.

l_{135} = 1,15 mm $^{+\ 0,20\ mm}_{-\ 0,00\ mm}$

l_{136} = 14,0 mm $^{+\ 0,0\ mm}_{-\ 0,2\ mm}$

l_{137} = 66,8 mm min.

l_{138} = 10,0 mm min.

l_{139} = 14,8 mm ± 0,1 mm

a_{14} = 49° max.

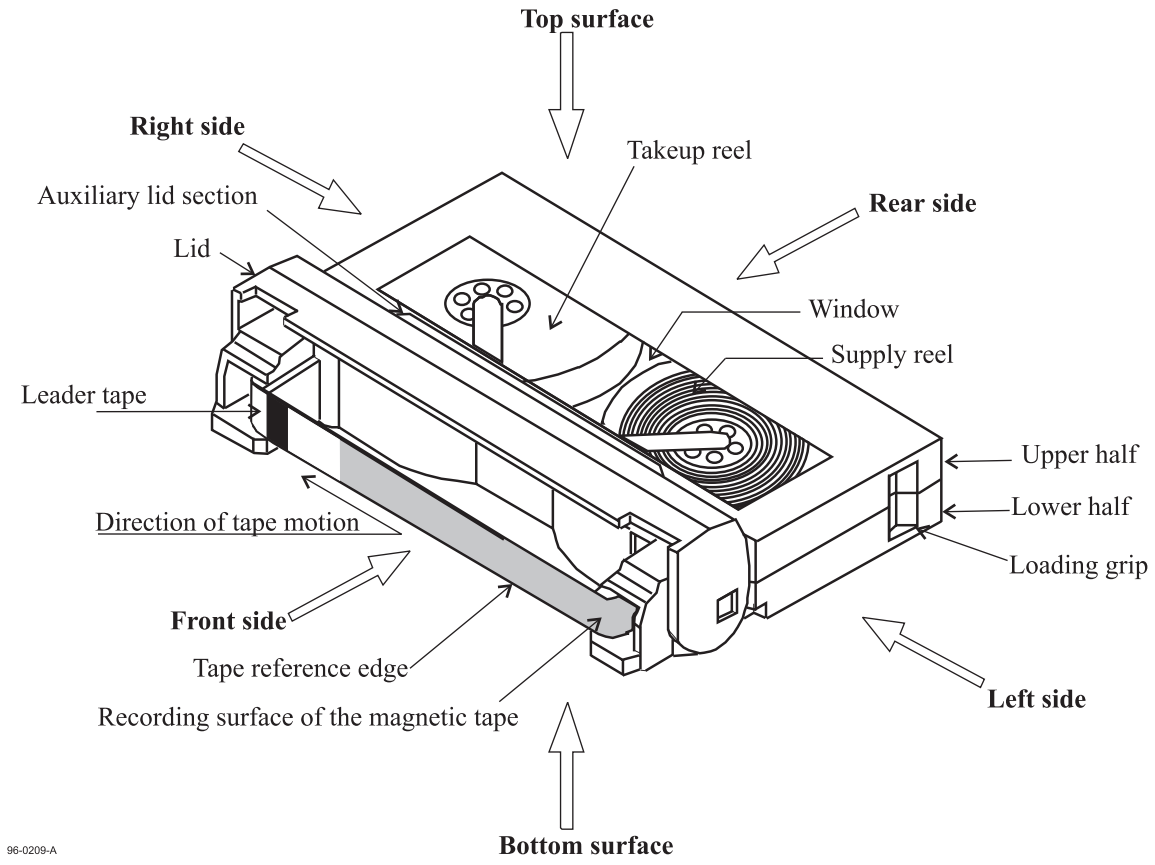

Figure 1 - Tape cartridge assembly top view, lid opened

--`,,```,,,,````-`-`,,`,,`,`,,`---

Copyright International Organization for Standardization
Provided by IHS under license with ISO
No reproduction or networking permitted without license from IHS
Not for Resale

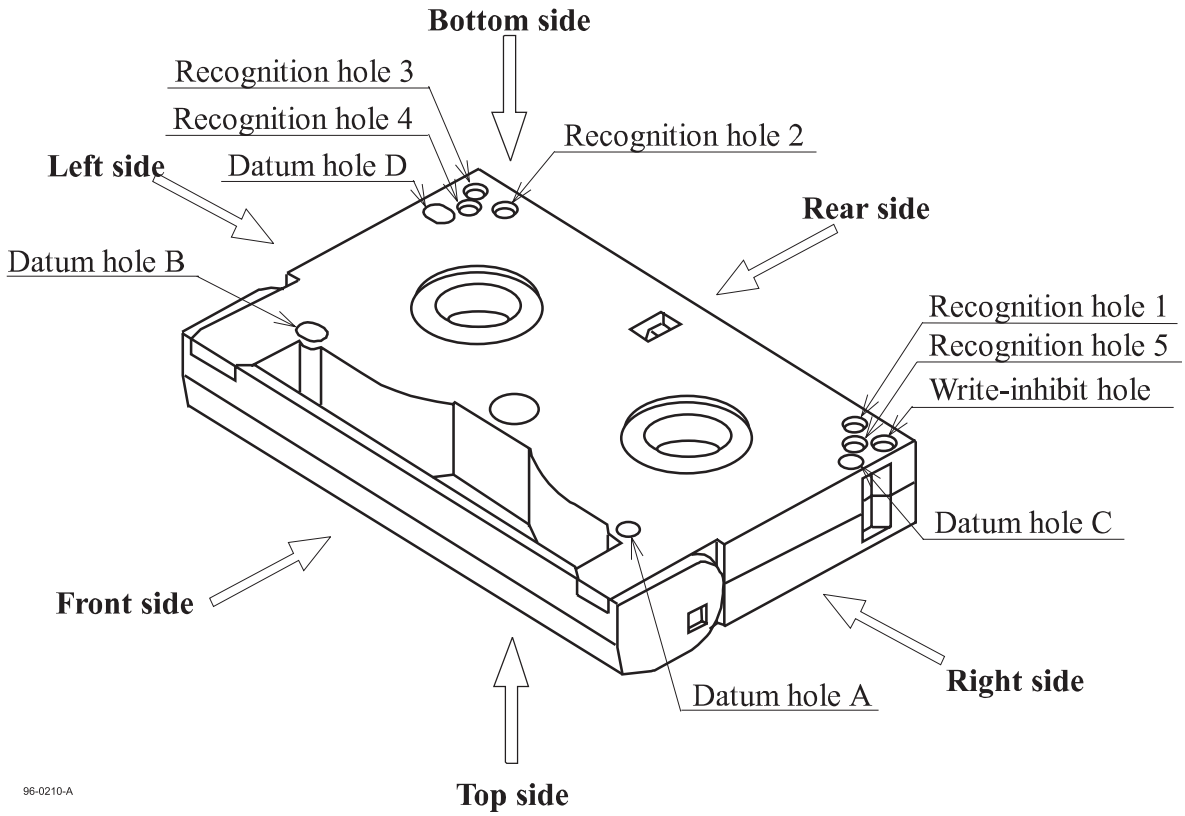

Figure 2 - Tape cartridge assembly bottom view, lid closed

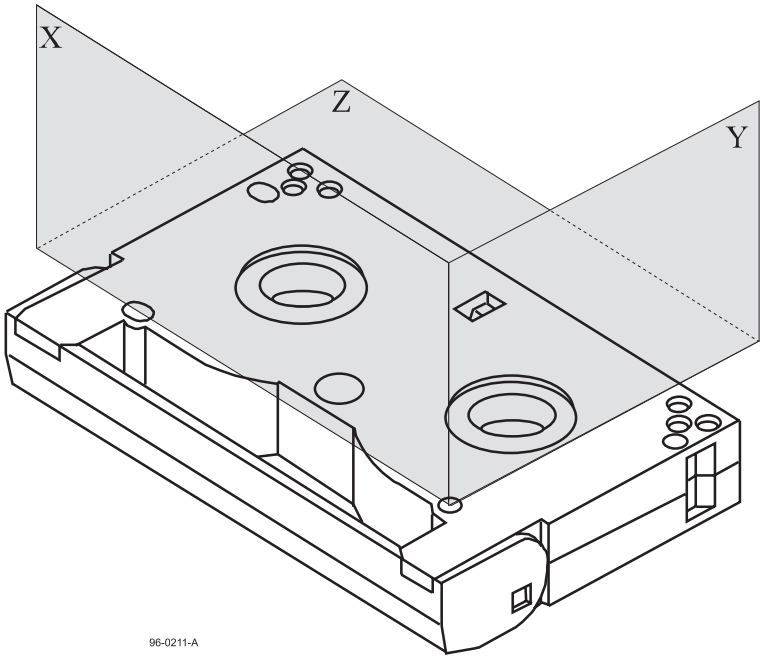

Figure 3 - Reference Planes X, Y, and Z

Copyright International Organization for Standardization
Provided by IHS under license with ISO
No reproduction or networking permitted without license from IHS
Not for Resale

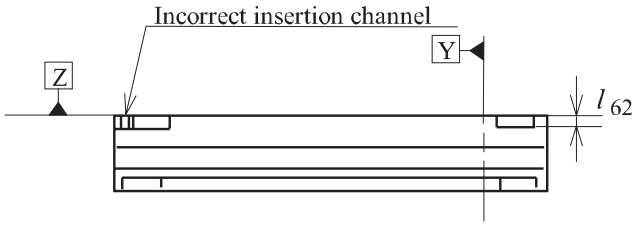

Figure 4 - Front side, lid closed

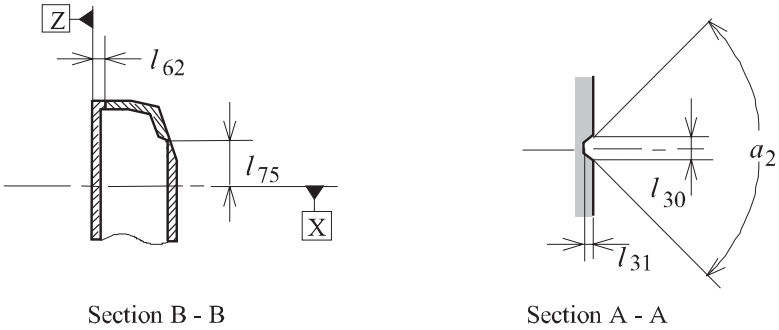

Figure 4 - Front side, lid closed

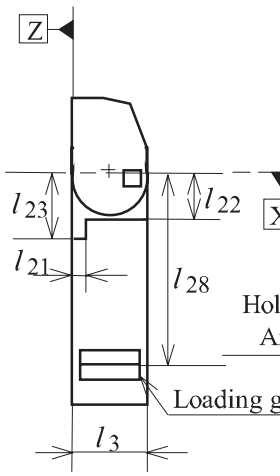

Figure 5 - Left side, lid closed

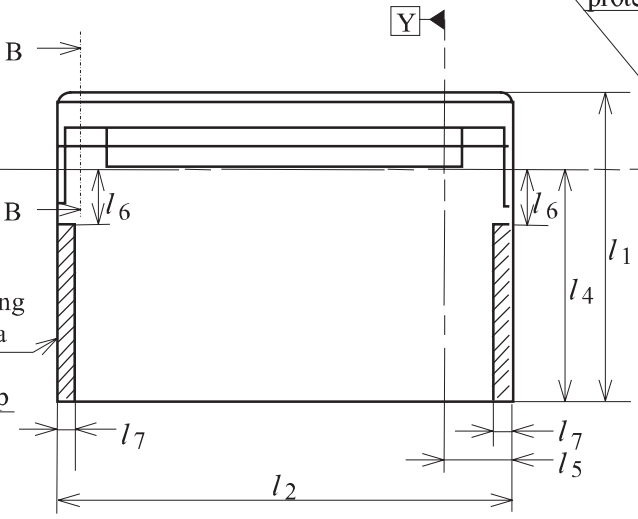

Figure 6 - Top side, lid closed

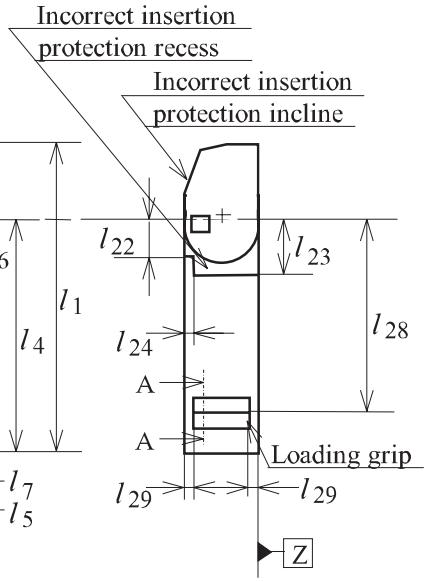

Figure 7 - Right side, lid closed

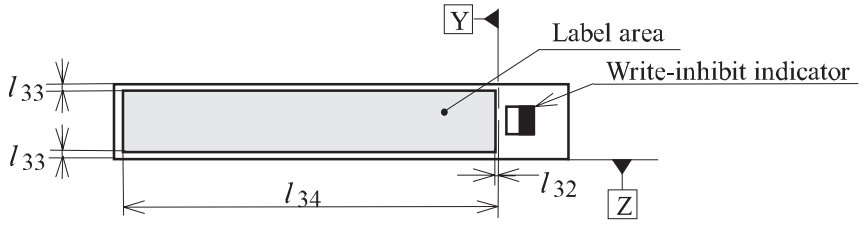

Figure 8 - Rear side, lid closed

96-0213-A

Copyright International Organization for Standardization
Provided by IHS under license with ISO
No reproduction or networking permitted without license from IHS
Not for Resale

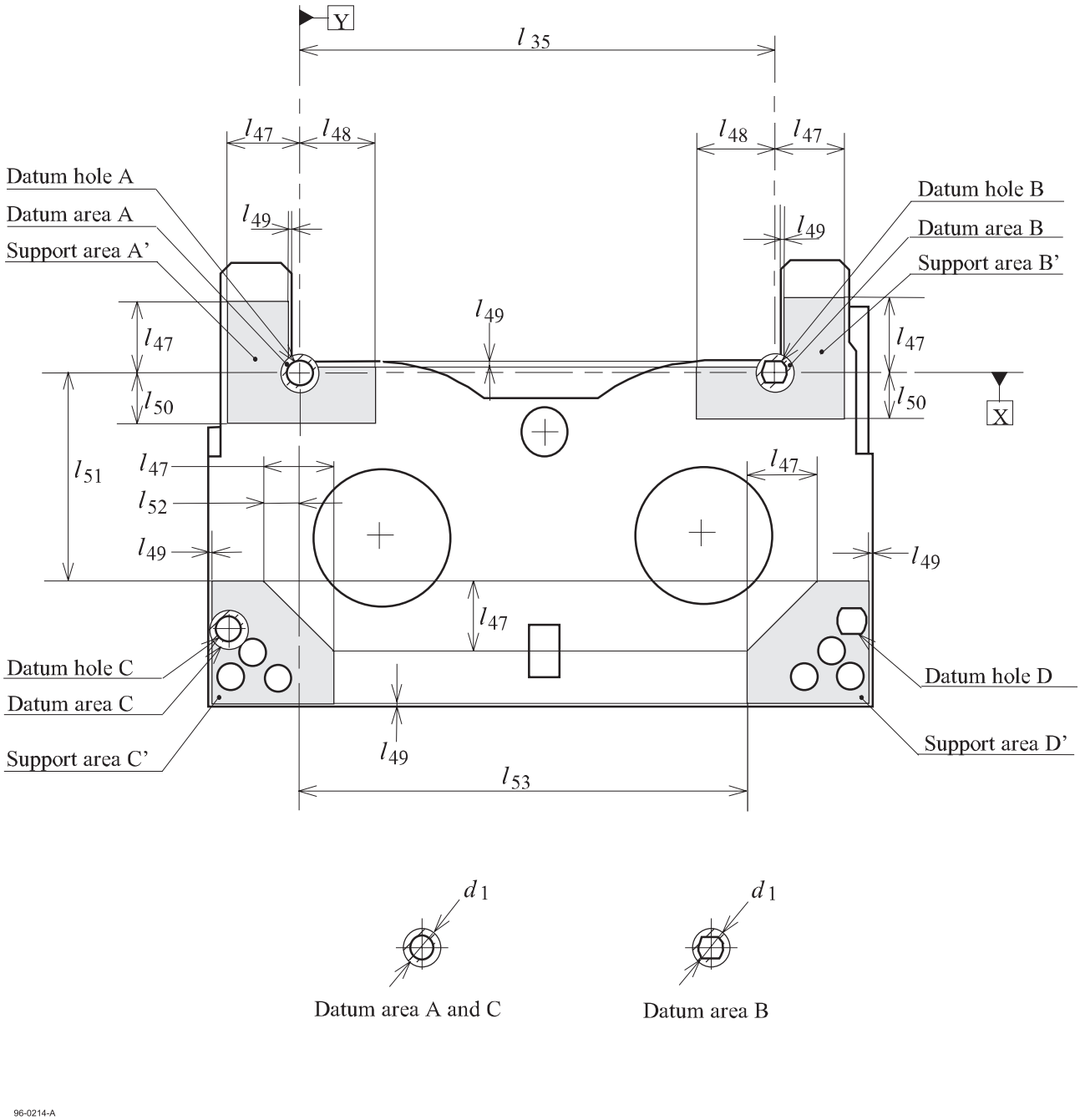

Figure 9 - Bottom side, Datum and Support areas

Copyright International Organization for Standardization
Provided by IHS under license with ISO
No reproduction or networking permitted without license from IHS
Not for Resale

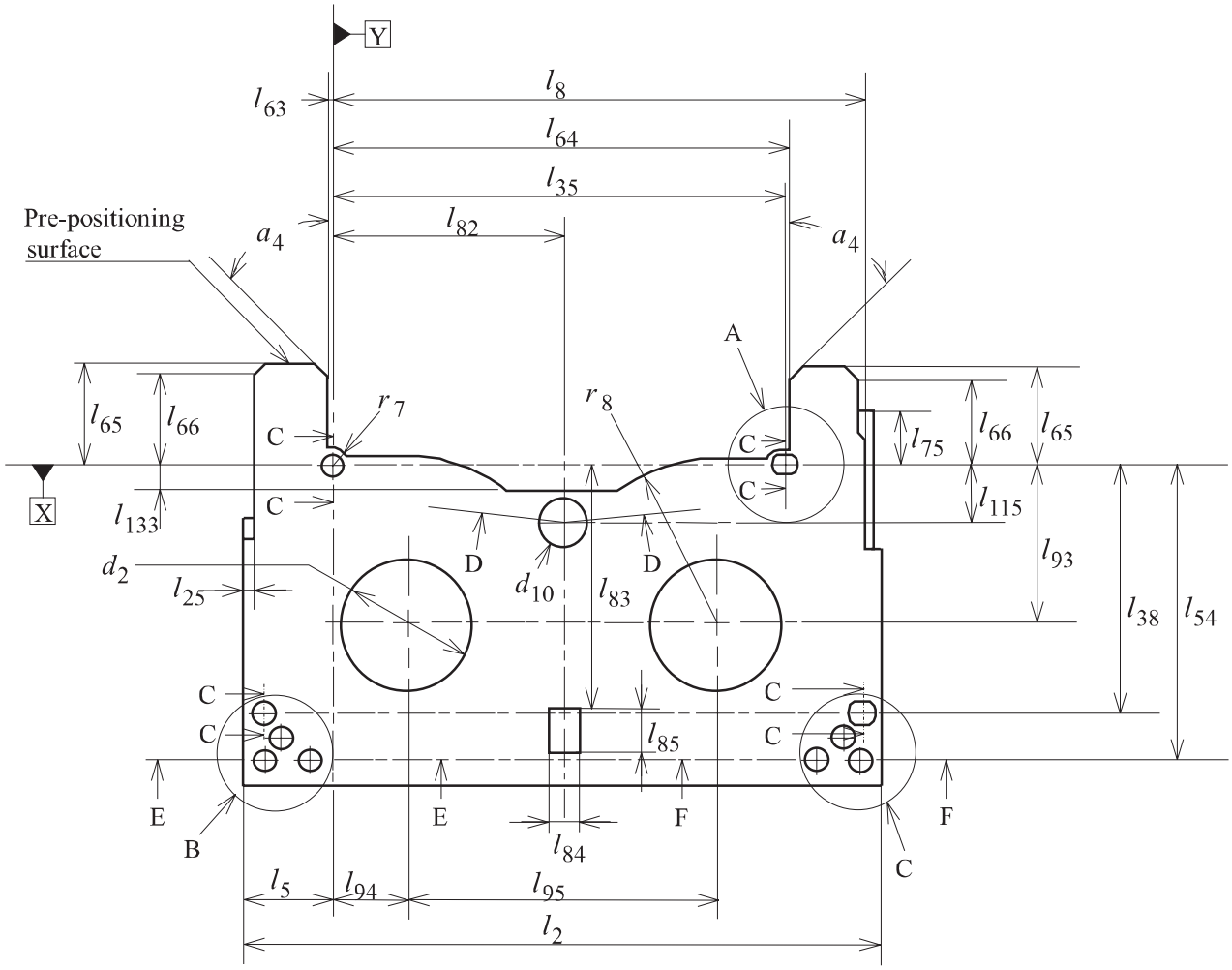

96-0215-A

Figure 10 - Bottom side, lid removed

Copyright International Organization for Standardization
Provided by IHS under license with ISO
No reproduction or networking permitted without license from IHS
Not for Resale

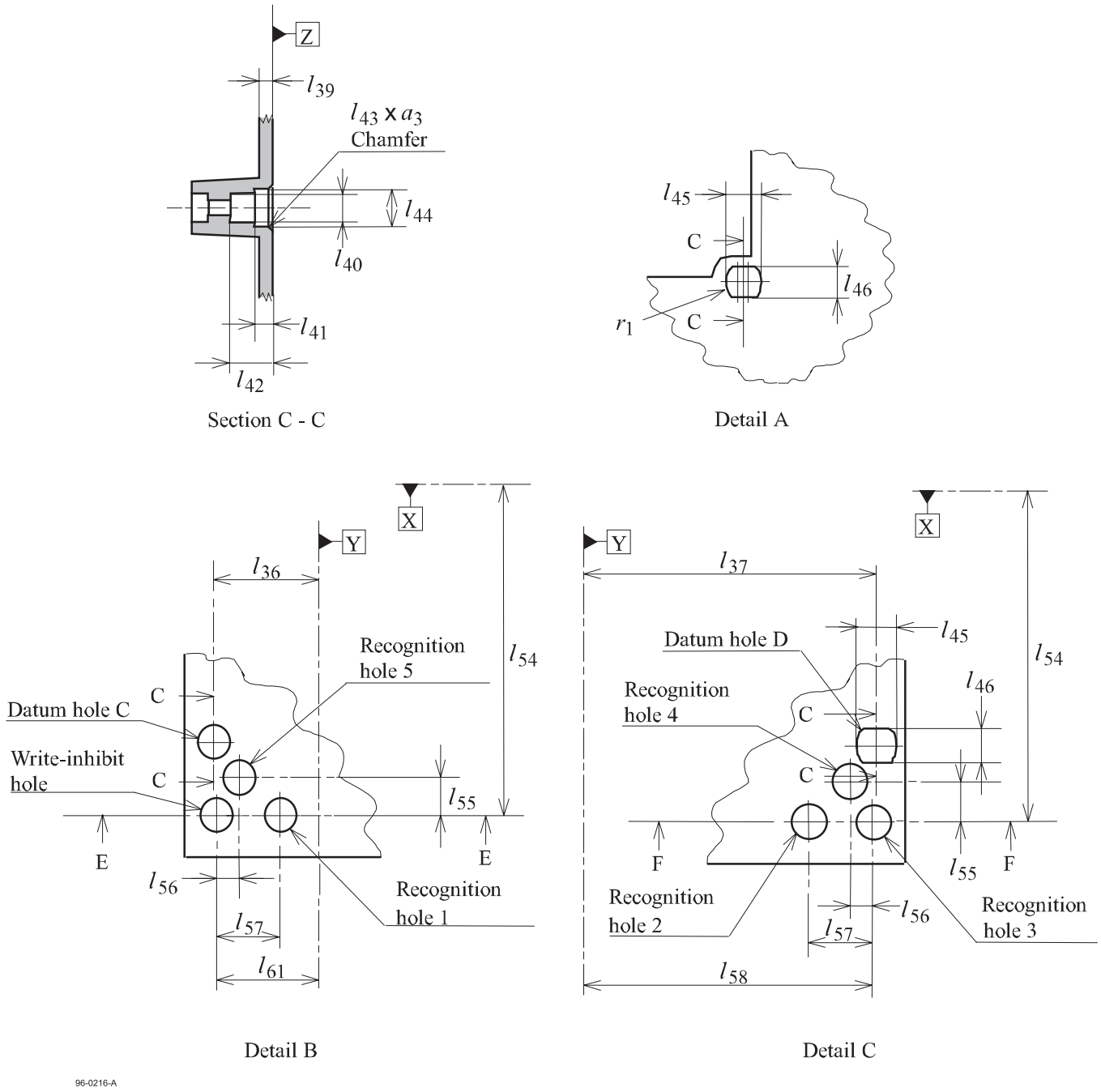

Figure 11 - Details of datum and recognition holes

Copyright International Organization for Standardization
Provided by IHS under license with ISO
No reproduction or networking permitted without license from IHS
Not for Resale

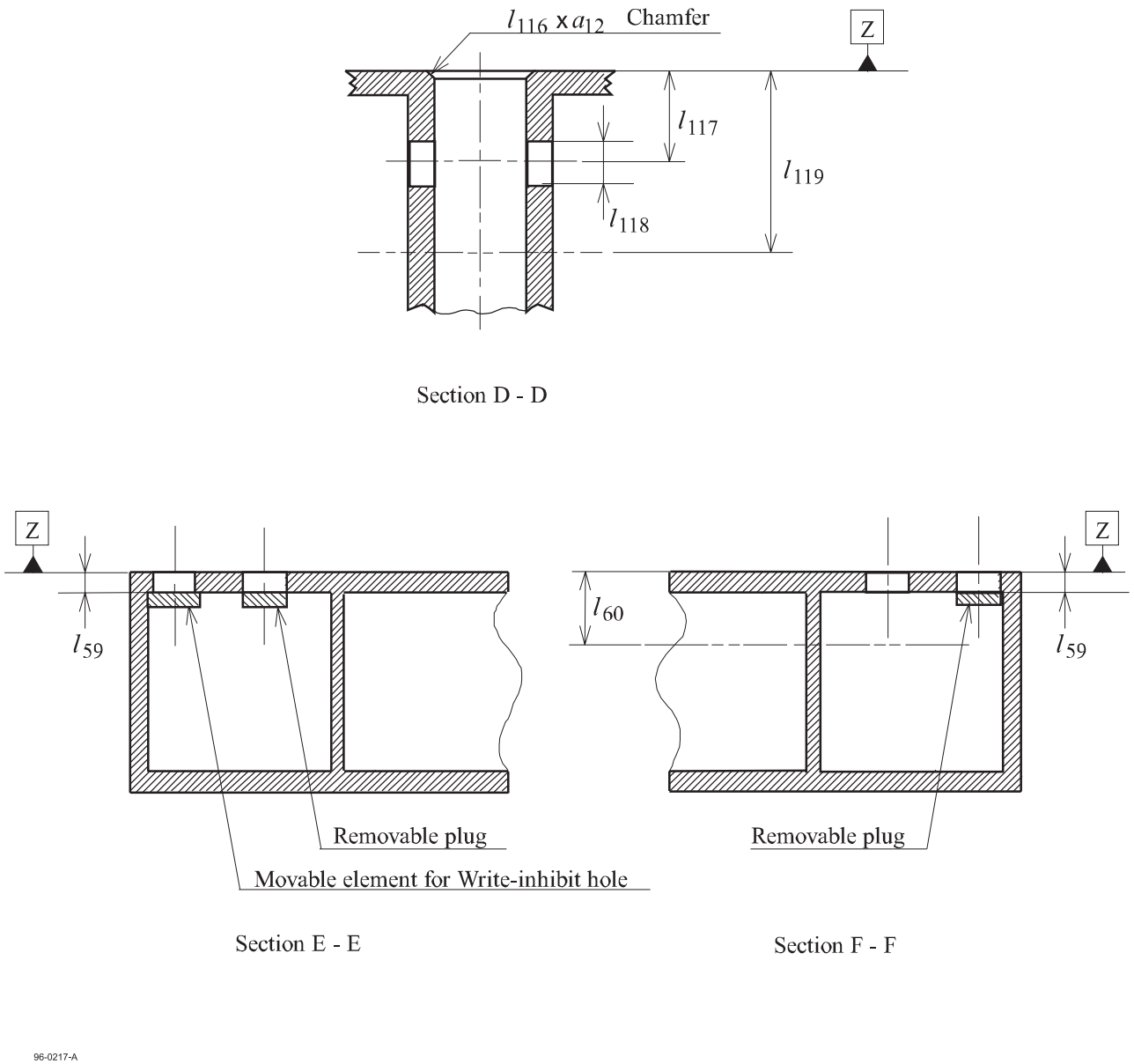

Figure 12 - Cross-sections of light path holes, recognition holes and write-inhibit hole

Copyright International Organization for Standardization
Provided by IHS under license with ISO
No reproduction or networking permitted without license from IHS
Not for Resale

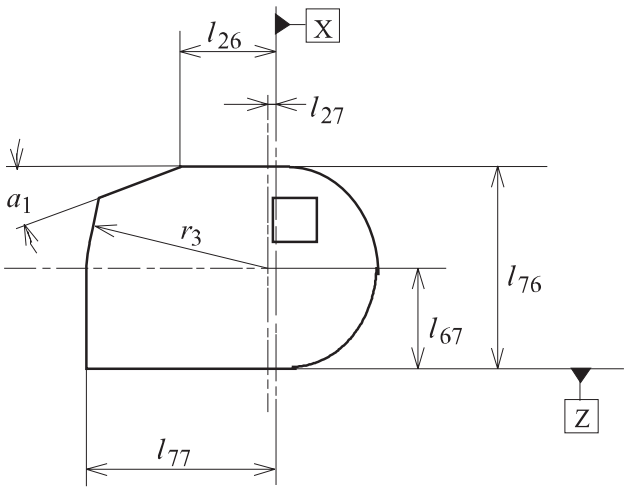

a) Details of the side of the lid

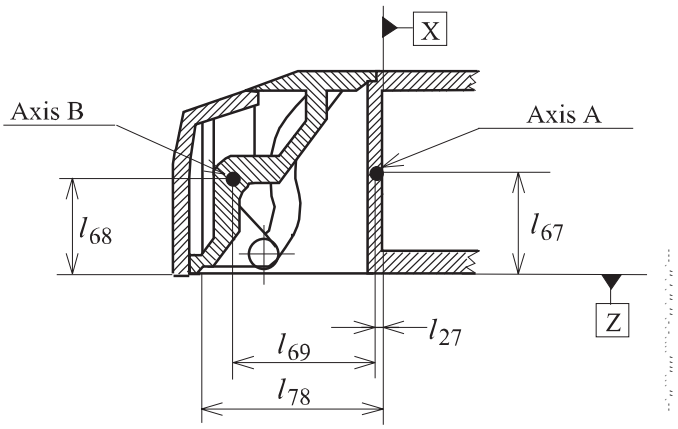

b) Internal lid structure

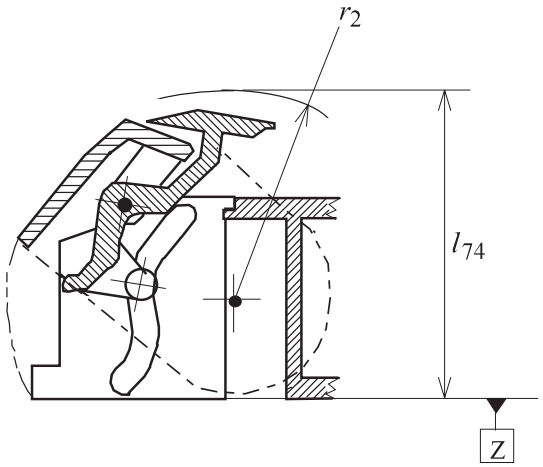

c) Lid configuration when rotating

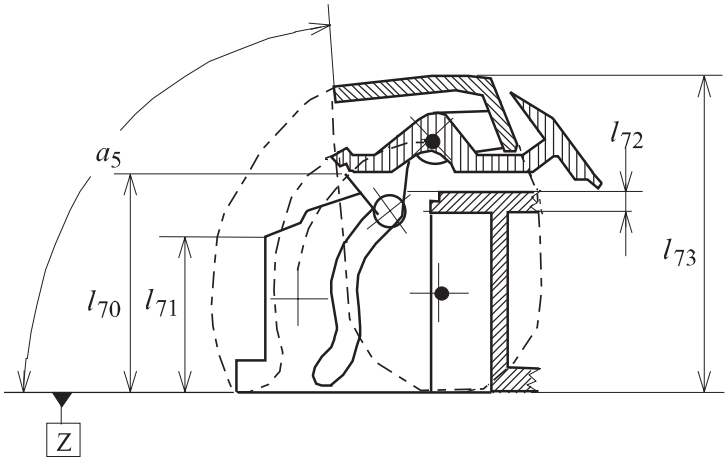

d) Lid configuration when the lid is open

96-0218-A

Figure 13 - Lid

Copyright International Organization for Standardization
Provided by IHS under license with ISO
No reproduction or networking permitted without license from IHS
Not for Resale

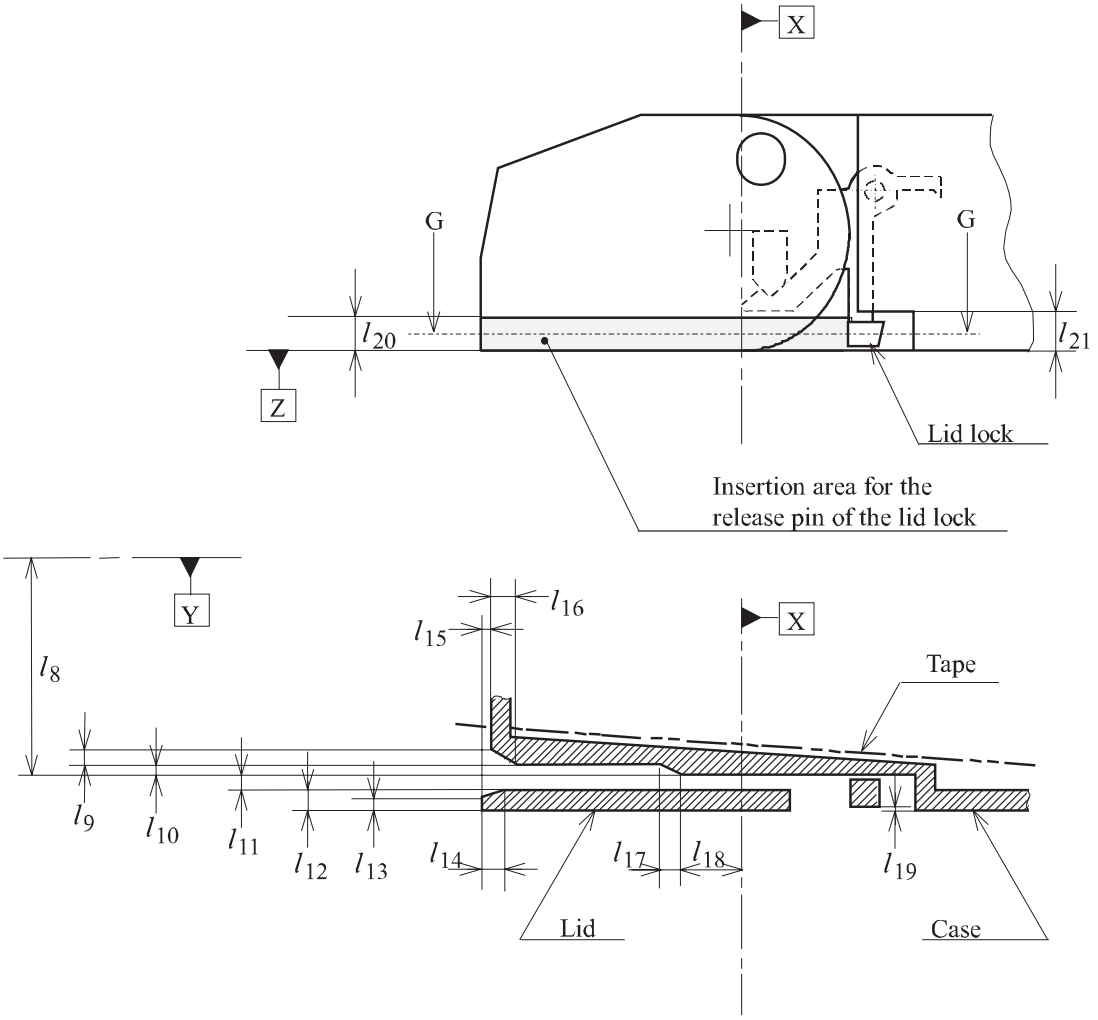

96-0219-A

Figure 14 - Lid release insertion channel

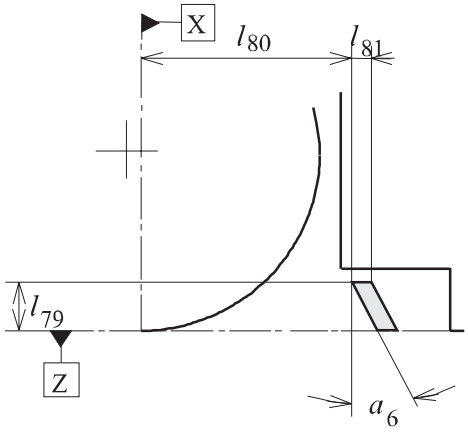

96-0220-A

Figure 15 - Lid release requirement

Copyright International Organization for Standardization
Provided by IHS under license with ISO
No reproduction or networking permitted without license from IHS
Not for Resale

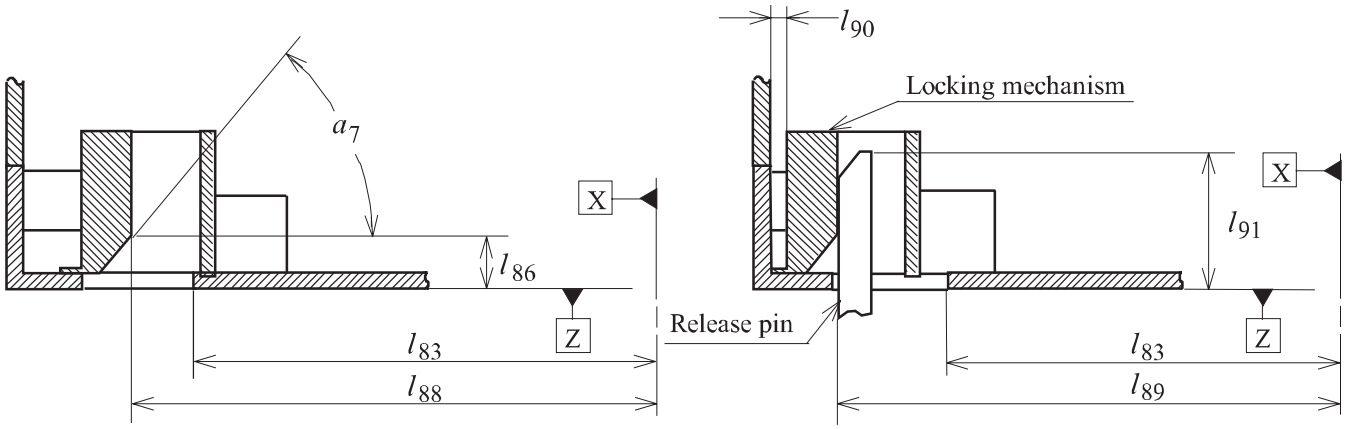

Reel lock in locked position

Reel lock in released position

Section L - L of figure 21

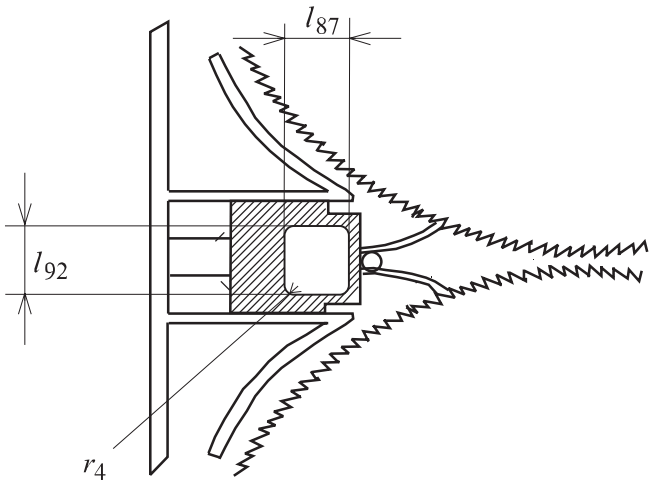

Detail E of figure 21

96-0221-A

Figure 16 - Reel lock and release

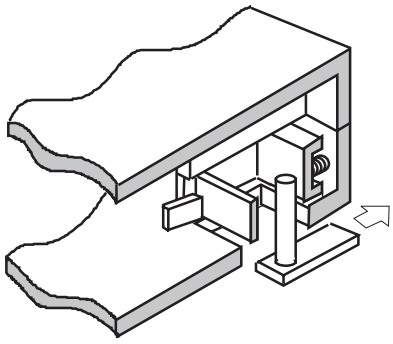

96-0222-A

Figure 17 - Direction of force needed to unlock the reel lock

Copyright International Organization for Standardization
Provided by IHS under license with ISO
No reproduction or networking permitted without license from IHS
Not for Resale

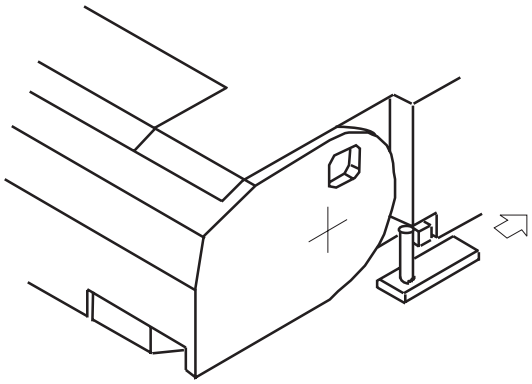

96-0223-A

Figure 18 - Direction of force needed to unlock the lid lock

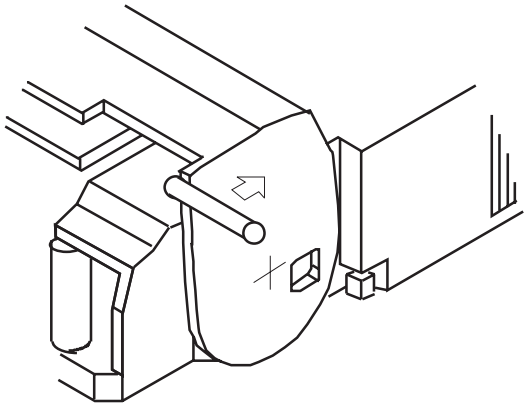

96-0224-A

Figure 19 - Direction of force needed to open the lid

Copyright International Organization for Standardization
Provided by IHS under license with ISO
No reproduction or networking permitted without license from IHS
Not for Resale

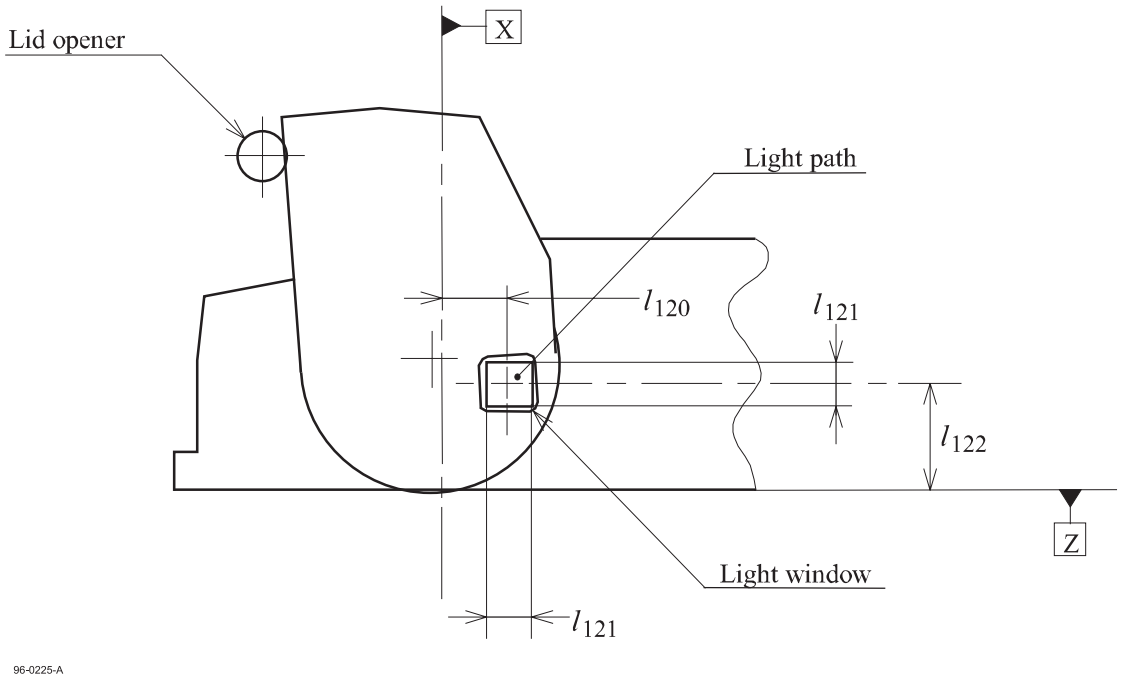

Figure 20 - Light path and light window

Copyright International Organization for Standardization
Provided by IHS under license with ISO
No reproduction or networking permitted without license from IHS
Not for Resale

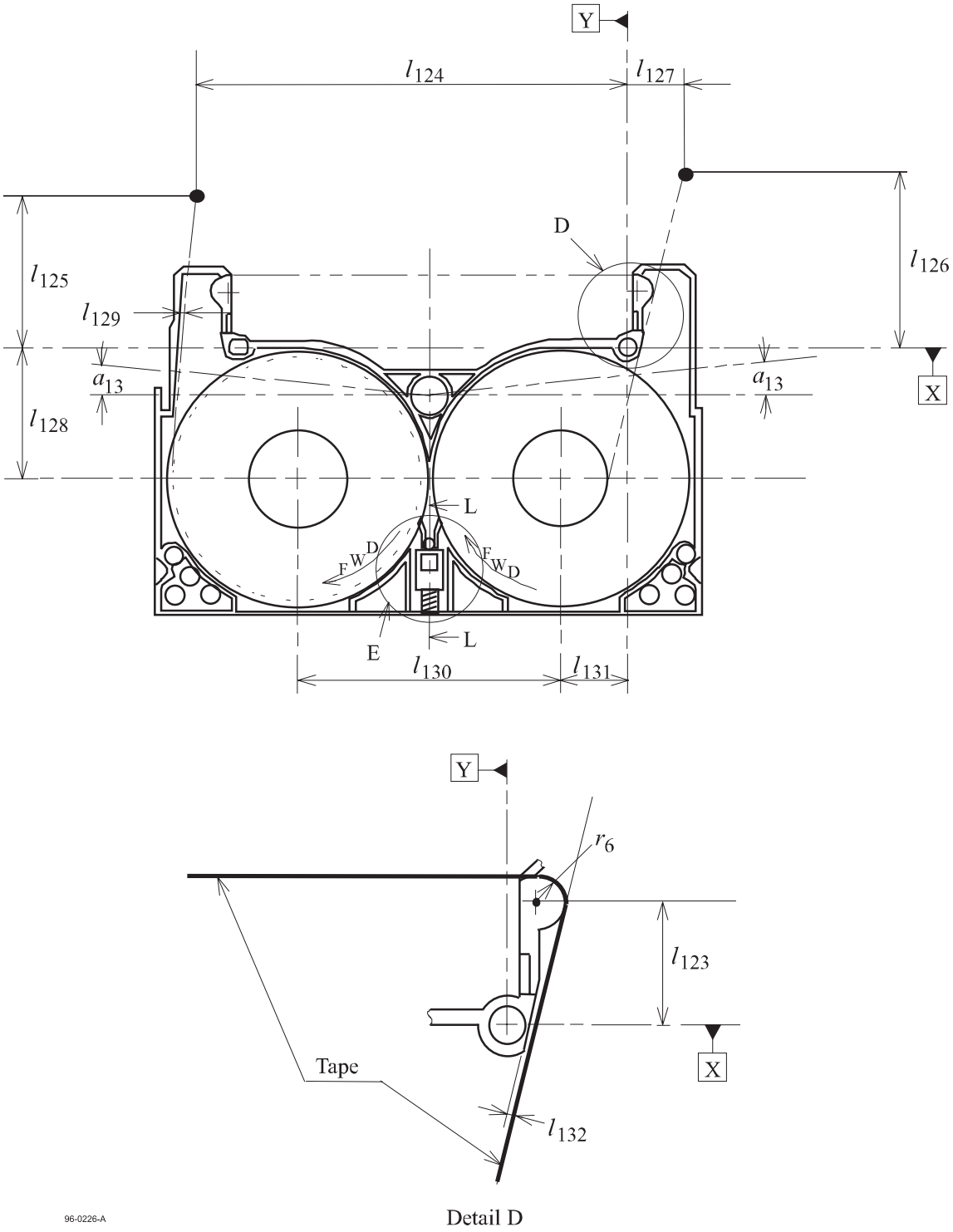

Figure 21 - Internal tape path and light path

Copyright International Organization for Standardization
Provided by IHS under license with ISO
No reproduction or networking permitted without license from IHS
Not for Resale

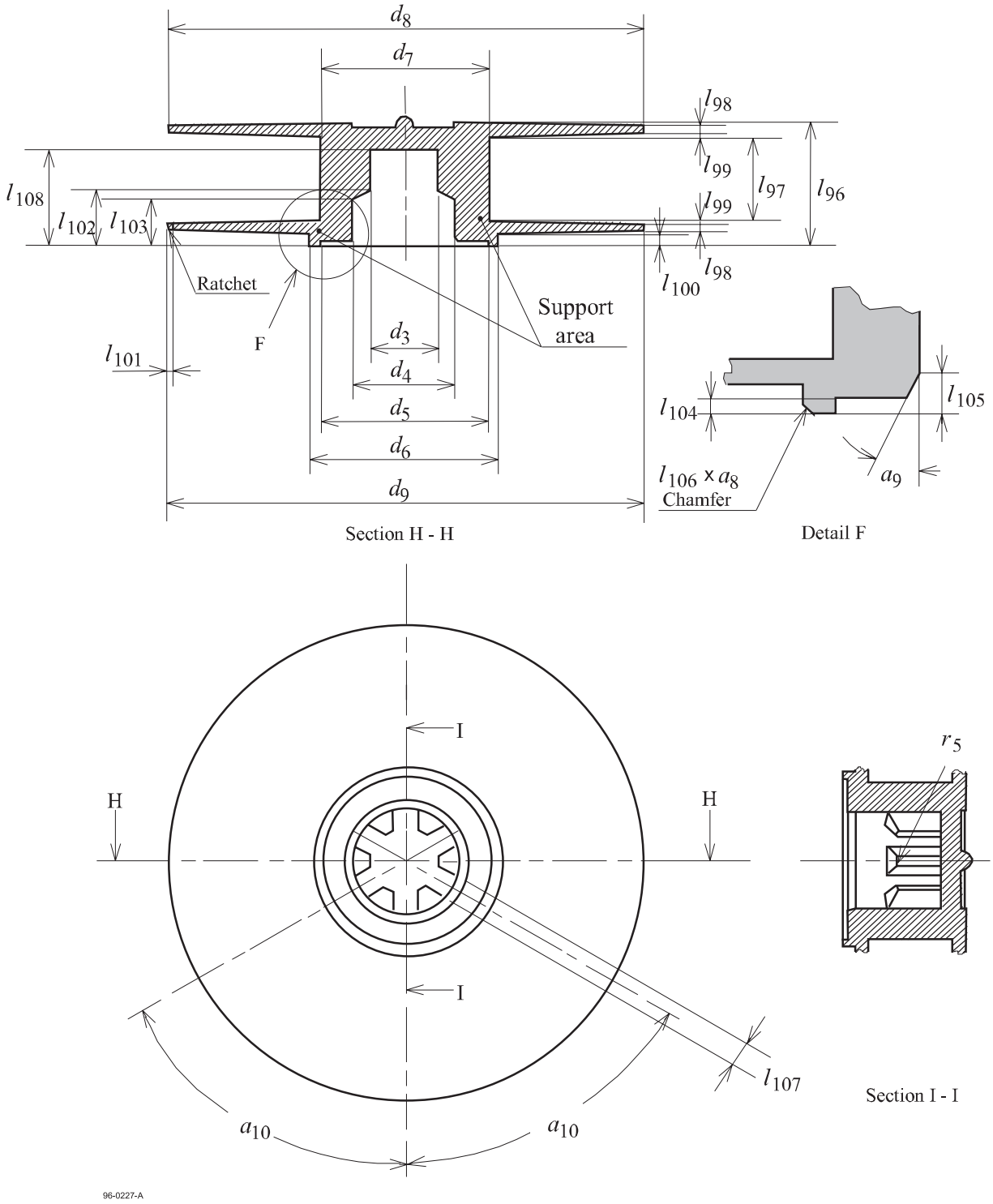

Figure 22 - Cartridge reel

Copyright International Organization for Standardization
Provided by IHS under license with ISO
No reproduction or networking permitted without license from IHS
Not for Resale

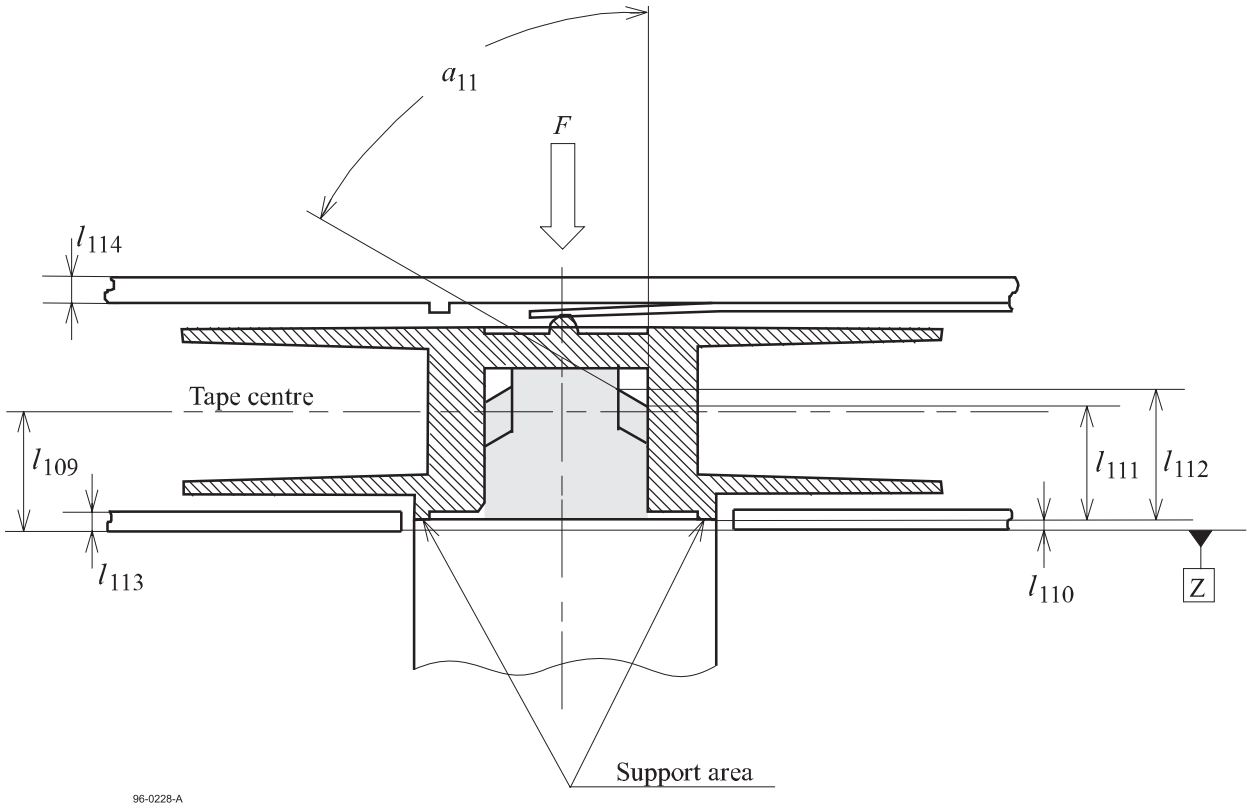

Figure 23 - Interface with drive spindle

--`,,```,,,,````-`-`,,`,,`,`,,`---

Copyright International Organization for Standardization
Provided by IHS under license with ISO
No reproduction or networking permitted without license from IHS
Not for Resale

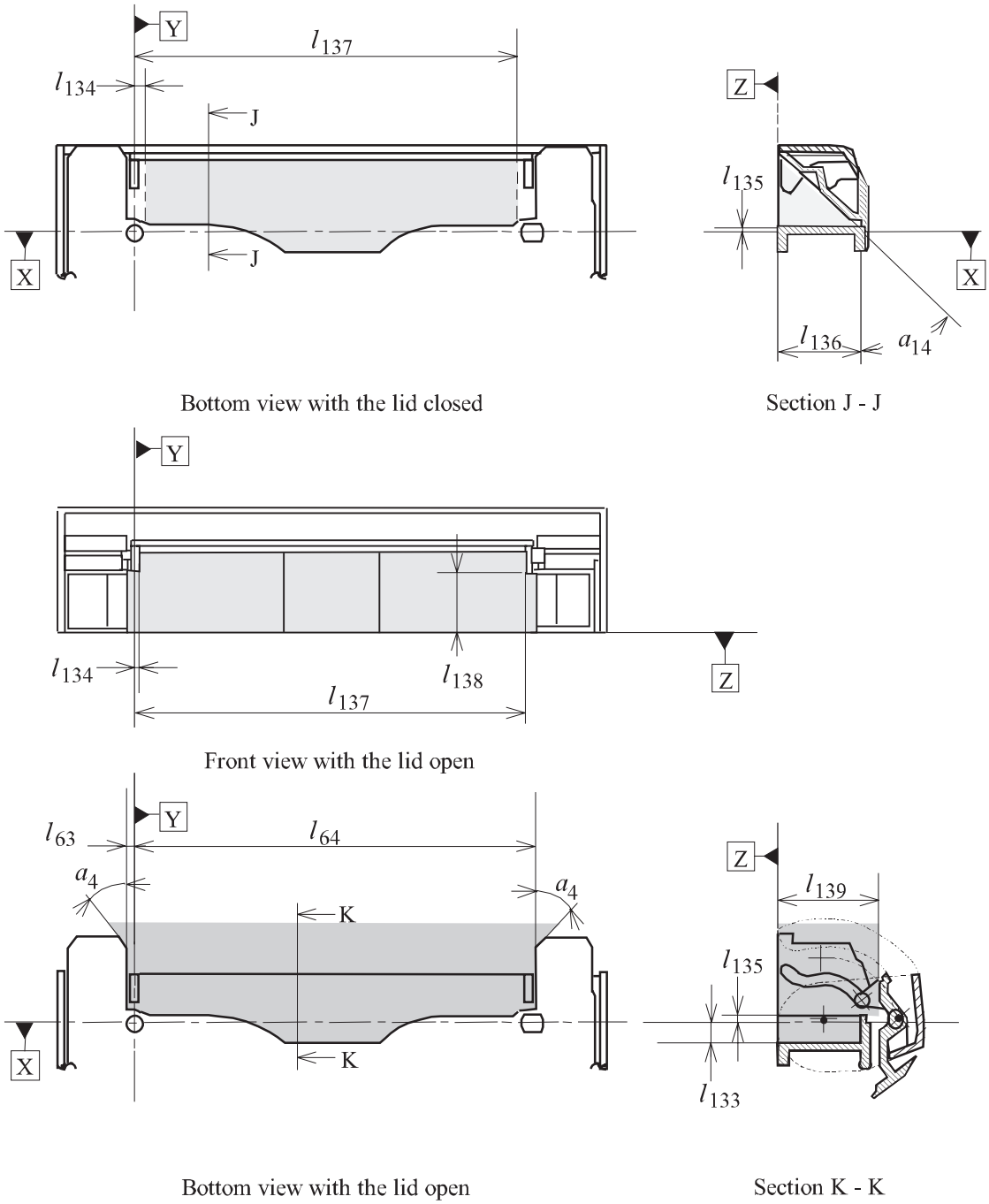

Figure 24 - Tape access cavity clearance

Copyright International Organization for Standardization
Provided by IHS under license with ISO
No reproduction or networking permitted without license from IHS
Not for Resale

Section 3 - Requirements for the Unrecorded Tape

9 Mechanical, physical and dimensional characteristics of the tape

9.1 Materials

The recordable area of the tape shall consist of a base material (oriented polyethylene terephthalate film or equivalent) coated on one side with a strong yet flexible layer of evaporated metal material (or equivalent). The back surface may be coated.

There shall be a leader tape between the take-up hub and PBOT. There shall be a trailer tape between PEOT and the supply hub. The leader and trailer tapes shall consist of a translucent length of the same or equivalent base material without the ferromagnetic coating or the back coating.

The leader and trailer tapes shall each be attached to the magnetic tape by means of a length of splicing tape which extends over each such joint. The splicing tape shall consist of polyethylene terephthalate (or equivalent) coated on one side with an acrylic (or equivalent) adhesive material.

9.2 Tape length

9.2.1 Length of magnetic tape

The length of tape between PBOT and PEOT shall be in the range 22,5 m to 172,0 m.

9.2.2 Length of leader and trailer tapes

The length of the leader and trailer tapes shall be in the range 70 mm to 90 mm. The joints between the leader and trailer tapes and the magnetic tape shall be perpendicular to the Tape Reference Edge within 1°.

9.2.3 Splicing tape

The splicing tape shall have a maximum length of 13 mm. It shall extend for a distance of 6,5 mm ± 1,5 mm over the leader and trailer tapes.

9.3 Width

9.3.1 Width of magnetic, leader and trailer tape

The width of the magnetic tape shall be 8,00 mm ± 0,01 mm. The difference between the largest and smallest width shall be no more than 6 µm.

The width of the leader tape, trailer tape and splice tape shall be 8,00 mm ± 0,02 mm.

Procedure

1. Cover a section of the tape with a glass microscope slide.
2. Measure the width across the tape from edge to edge with no tension applied to the tape using a calibrated microscope, profile projector, or equivalent having an accuracy of at least 2,5 µm.
3. Repeat the measurement to obtain tape widths at a minimum of five different positions along a minimum tape length of 1 m.

The tape width is the average of the widths measured.

9.3.2 Width and position of splicing tape

The width of the splicing tape and its position across the width of the leader, trailer and magnetic tapes shall be such that the bottom edge of the splicing tape shall be no more than 0,60 mm from the bottom edges of the other tapes and the top edge of the splicing tape shall be no more than 0,60 mm from their top edges. Neither edge of the splicing tape shall extend beyond the edges of the leader, trailer and magnetic tapes.

9.4 Discontinuities

There shall be no discontinuities in the tape between PBOT and PEOT, such as those produced by tape splicing or perforations.

9.5 Thickness

9.5.1 Thickness of magnetic tape

The thickness of the magnetic tape at any point shall be between 6,5 µm and 7,3 µm.

9.5.2 Thickness of leader and trailer tape

The thickness of the leader and trailer tape shall be between 9 µm and 17 µm.

9.5.3 Thickness of splice tape

The thickness of the splice tape at any point shall be 27 µm max.

--`,,```,,,,````-`-`,,`,,`,`,,`---
Copyright International Organization for Standardization
Provided by IHS under license with ISO
No reproduction or networking permitted without license from IHS
Not for Resale

9.6 Longitudinal curvature

The radius of curvature of the edge of the tape shall not be less than 33 m.

Procedure

1. Allow a 1 m length of tape to unroll and assume its natural curvature on a flat smooth surface.
2. Measure the deviation from a 1 m chord.
3. The deviation shall not be greater than 3,8 mm.

This deviation corresponds to the minimum radius of curvature of 33 m if measured over an arc of a circle.

9.7 Cupping

The departure of the tape from a plane established by the edges of the tape shall not exceed 0,7 mm.

Procedure

1. Cut a 150 mm ± 10 mm length of tape.
2. Condition it for a minimum of 3 hours in the test environment by hanging it so that the coated surface is freely exposed to the test environment.
3. Lay the tape across two cylindrical guides that are placed horizontally with the centres 35 mm apart.
4. Attach a 0,3 gram weight to each end of the tape.
5. Measure the distance between the plane established by the edges of the tape and the maximum deviation from the plane.

9.8 Coating adhesion

The force required to peel any part of the coating from the tape base material shall not be less than 0,10 N.

Procedure

1. Take a test piece of the tape approximately 380 mm long and scribe a line through the coating across the width of the tape 125 mm from one end.
2. Using a double-sided pressure sensitive tape, attach the test piece to a smooth metal plate, with the coated surface facing the plate, as shown in figure 25.
3. Fold the test piece over 180º adjacent to and parallel with the scribed line. Attach the metal plate and the free end of the test piece to the jaws of a universal testing machine such that when the jaws are separated the tape is peeled. Set the jaw separation rate to 254 mm/min.
4. Note the force at which any part of the coating first separates from the base material. If this is less than 0,10 N, the tape has failed the test. If the test piece peels away from the double-sided pressure sensitive tape before the force exceeds 0,10N, an alternative type of double-sided pressure tape shall be used.

If the back surface of the tape is coated, repeat the procedure for the back coating.

Copyright International Organization for Standardization
Provided by IHS under license with ISO
No reproduction or networking permitted without license from IHS Not for Resale

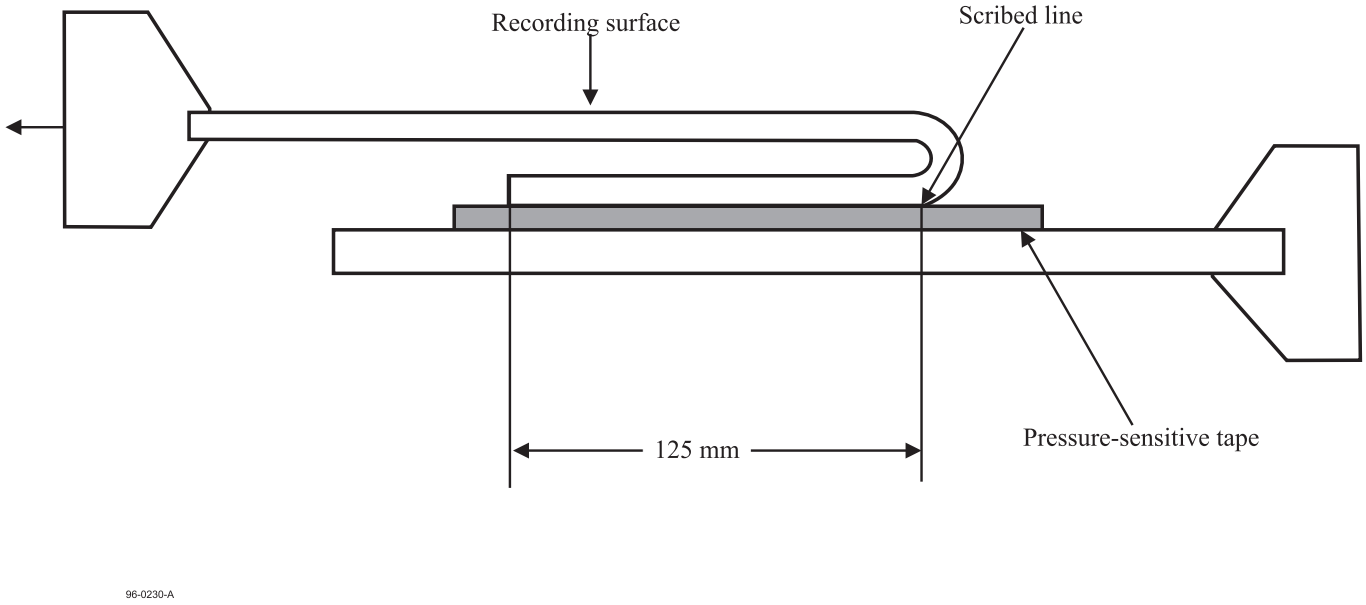

Figure 25 - Measurement of the coating adhesion

9.9 Layer-to-layer adhesion

There shall be no tendency for the test piece to stick or the coating to peel.

Procedure

1. Attach one end of a test piece of magnetic tape of 1 m in length to the surface of a glass tube of 36 mm in diameter.
2. Wind the tape onto the tube at a tension of 1,1 N.
3. Store the wound test piece in a temperature of 45 ^{o}C ± 3 ^{o}C and a relative humidity of 80 % for 4h.
4. Store for a further 24 hours in the testing environment.
5. Apply a force of 0,1 N to the free end of the test piece and allow it to unwind slowly.

9.10 Tensile strength

Measurements shall be made in accordance with ISO/R 527. The length of the test piece shall be 200 mm. The length of the leader tape test piece shall be 50 mm. The length of the trailer tape test piece shall be 50 mm. The rate of elongation for all tensile tests shall be 100 mm/min - ISO/R 527, Rate D.

9.10.1 Breaking strength

Load the test piece until the breaking point of the test piece is reached. The force required to reach that point is the breaking strength of the tape.

The breaking strength shall not be less than 8 N.

9.10.2 Yield strength

The yield strength is the force necessary to produce a 5% elongation of the tape.

The yield strength shall be greater than 4 N.

9.11 Residual elongation

The residual elongation, stated in per cent of the original tape length, shall be less than 0,04 %.

Procedure

1. Measure the initial length of a test piece of approximately 1 m with a maximum applied force of 0,20 N.
2. Apply an additional force per total cross-sectional area of 20,5 N/mm^2 for a period of 10 minutes.
3. Remove the additional force and measure the length after ten minutes.

--`,,```,,,,````-`-`,,`,,`,`,,`---

Copyright International Organization for Standardization
Provided by IHS under license with ISO
No reproduction or networking permitted without license from IHS
Not for Resale

9.12 Electrical resistance of the recording surface

The electrical resistance of any square area of the recording surface shall be 10^3 Ω max.

Procedure

1. Condition a test piece of tape in the test environment for 24 hours.
2. Position the test piece over two 24-carat gold-plated, semicircular electrodes having a radius r = 10 mm and a finish of at least N4, so that the recording surface is in contact with each electrode. These electrodes shall be placed parallel to the ground and parallel to each other at a distance d = 8 mm between their centres. See figure 26.
3. Apply the force necessary to produce a tension of 5 N/mm^2 to each end of the test piece.
4. Apply a d.c. voltage of 7 V ± 1 V across the electrodes and measure the resulting current flow. From this value, determine the electrical resistance.

Repeat for a total of five positions along the test piece and average the five resistance readings.

When mounting the test piece, ensure that no conducting paths exist between the electrodes except that through the coating under test.

NOTE - Particular attention should be given to keeping the surfaces clean.

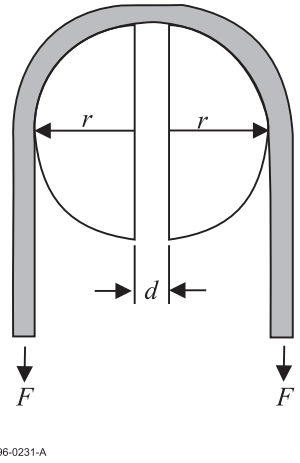

Figure 26 - Measurement of electrical resistance

9.13 Tape winding

The magnetic recording surface of the tape shall face outward from the cartridge and reels.

9.14 Light transmittance of tape

The light transmittance of the magnetic tape shall be 5 % max.

The light transmittance of the recognition stripe shall be 10 % max.

The light transmittance of the leader and trailer tapes shall be 60 % min.

The method for measuring light transmittance is given in annex A.

9.15 Data cartridge recognition stripe

A single recognition stripe shall be printed on the back side of the leader across the full width of the tape as shown in figure 27. The length of the stripe shall be 3,0 mm ± 0,1 mm.

The position of the edge of the stripe closest to the splice shall be 20,17 mm ± 10,80 mm from the splice of the leader and the magnetic tape.

Copyright International Organization for Standardization
Provided by IHS under license with ISO
No reproduction or networking permitted without license from IHS Not for Resale

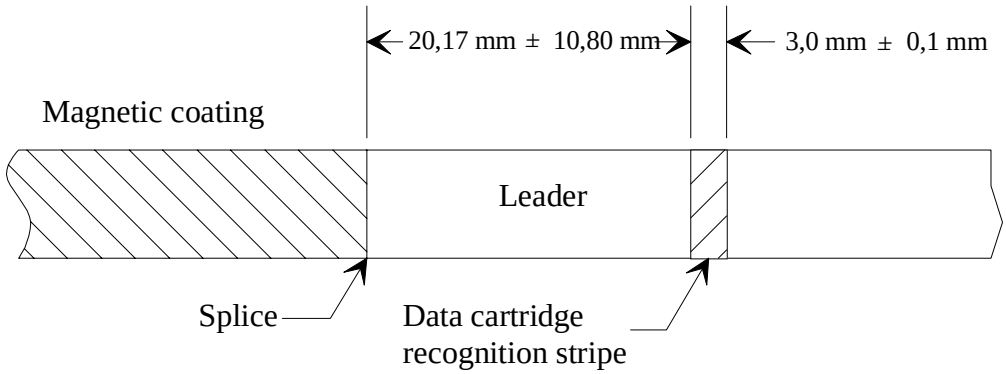

Figure 27 - Recognition stripe location

10 Magnetic recording characteristics

The magnetic recording characteristics shall be defined by the testing requirements given below.

When performing these tests, the output or resultant signal shall be measured on a read-while-write pass for both a tape calibrated to the Master Standard Reference Tape and the tape under test, on the same equipment.

The following conditions shall apply to the testing of all magnetic recording characteristics, unless otherwise stated.

The positive azimuth tracks shall be used.

10.1 Test conditions

The following conditions shall apply to all tests of magnetic recording performance in clause 10, unless otherwise stated.

tape condition:	a.c. erased to 2 % or less of the Average Signal Amplitude recorded at 3 819 ftpmm
head/tape speed:	13,876 8 m/sec ± 0,027 8 m/sec
tape tension:	0,10 N ± 0,02 N measured at the input to the scanner
track width:	11,5 µm ± 1,0 µm
write gap length:	0,20 µm ± 0,03 µm
read gap length:	0,20 µm ± 0,03 µm
gap azimuth:	$20{,}009^{o} \pm 0{,}200^{o}$
recording current:	Test Recording Current
recording waveform:	square wave

10.2 Typical Field

The Typical Field of the tape shall be between 80 % and 120 % of the Reference Field.

Traceability to the Reference Field is provided by the calibration factors supplied with each Secondary Standard Reference Tape.

10.3 Signal Amplitude

The Average Signal Amplitude, exclusive of missing pulses, at the recording density of 3 819 ftpmm shall be between 80 % and 130 % of the Standard Reference Amplitude.

Traceability to the Average Signal Amplitude of the Master Standard Reference Tape is provided by the calibration factors supplied with each Secondary Standard Reference Tape.

10.4 Resolution

The ratio of the Average Signal Amplitude at the physical recording density of 3 819 ftpmm to that at the physical recording density of 954,75 ftpmm shall be between 80 % and 120 % of the same ratio for the Master Standard Reference Tape.

Traceability to the resolutions for the Master Standard Reference Tape is provided by the calibration factors supplied with each Secondary Standard Reference Tape.

--`,,```,,,,````-`-`,,`,,`,`,,`---

Copyright International Organization for Standardization
Provided by IHS under license with ISO
No reproduction or networking permitted without license from IHS
Not for Resale

10.5 Narrow-band Signal-to-Noise Ratio

The narrow-band signal-to-noise ratio (NB-SNR) is the average read signal power divided by the average integrated (side-band) rms noise power and is expressed in dB.

The NB-SNR shall not be less than 24 dB when normalized to a track width of 11,5 µm. The normalization factor is dB(11,5) = dB(W) + 10 log 11,5/W, where W is the track width used when measuring dB(W).

Procedure

1. The NB-SNR shall be measured using a spectrum analyzer. The spectrum analyzer resolution bandwidth (RBW) shall be 3 kHz and the video bandwidth (VBW) shall be 30 Hz.
2. Measure the read signal amplitude of the 3 819 ftpmm signal using a spectrum analyzer, taking a minimum of 150 samples over a minimum length of tape of 6 m.
3. On the next pass (read only), measure the rms noise power over the same section of tape and integrate the rms noise power (normalizing for the actual resolution bandwidth) over the range from 1 MHz to 33 MHz.

10.6 Ease of erasure

When a tape has been recorded at 954,75 ftpmm with a recording current equal to the Test Recording Current for 3 819 ftpmm and passed through a longitudinal steady erasing field of 320 000 A/m any remaining signal shall not exceed 2 % of the Standard Reference Amplitude. The erasure field shall be reasonably uniform, for example, the field in the middle of a solenoid. This measurement shall be made with a band pass filter passing, at least, the first three harmonics.

10.7 Tape quality

10.7.1 Missing pulses

A missing pulse is a loss of read signal amplitude. A missing pulse exists when the base-to-peak read signal is 40 %, or less, of half the Average Signal Amplitude for the recording density of 3 819 ftpmm on the same tape.

10.7.2 Missing pulse zone

A missing pulse zone shall commence with a missing pulse and ends when a length of 1 mm of track has been measured. If a missing pulse zone continues for a distance exceeding 1 mm, a further missing pulse zone shall result.

A missing pulse zone does not continue from one track to the next.

The missing pulse zone rate shall be less than 1 in 5 x 10^6 flux transitions and applies to both positive and negative azimuth tracks.

10.7.3 Overwrite

Overwrite is the ratio of the Average Signal Amplitude of the residual of a low density recording after overwriting at a higher density to the Average Signal Amplitude of the original low density recording.

Traceability to the overwrite ratio for the Master Standard Reference Tape is provided by the calibration factors supplied with each Secondary Standard Reference Tape.

Procedure

a.c. erase the tape. Record at the physical density of 954,75 ftpmm and measure the Average Signal Amplitude. Overwrite at the physical recording density of 3 819 ftpmm and measure the Average Signal Amplitude of the residual 954,75 ftpmm signal. Repeat for the Secondary Standard Reference Tape.

Requirement

$$\text{The ratio} = \frac{\text{Residual Average Signal Amplitude at 954,75 ftpmm after overwriting}}{\text{Average Signal Amplitude of the original recording at 954,75 ftpmm}}$$

shall be less than 120 % of the same ratio for the Master Standard Reference Tape.

--`,,```,,,,````-`-`,,`,,`,`,,`---
Copyright International Organization for Standardization
Provided by IHS under license with ISO
No reproduction or networking permitted without license from IHS Not for Resale

Section 4 - Requirements for an Interchanged Tape

11 Format of a track pair

11.1 General

Information from the host system to be written to tape may consist of data bytes, Long File Marks, Short File Marks or Set Marks. Each of these are considered to be a Logical Block. Logical Blocks are converted into physical blocks as described in 11.2.

The format of a track pair shall be as shown in figure 28. Each track comprises the same elements listed in order as follows.

- Preamble
- Search fields
- Servo area (track 2 only)
- Search fields
- Data clock synchronization
- 8 physical blocks
- Search fields
- Servo area (track 2 only)
- Search fields
- Data clock synchronization
- 8 physical blocks
- Search fields
- Servo area (track 2 only)
- Search fields
- Postamble

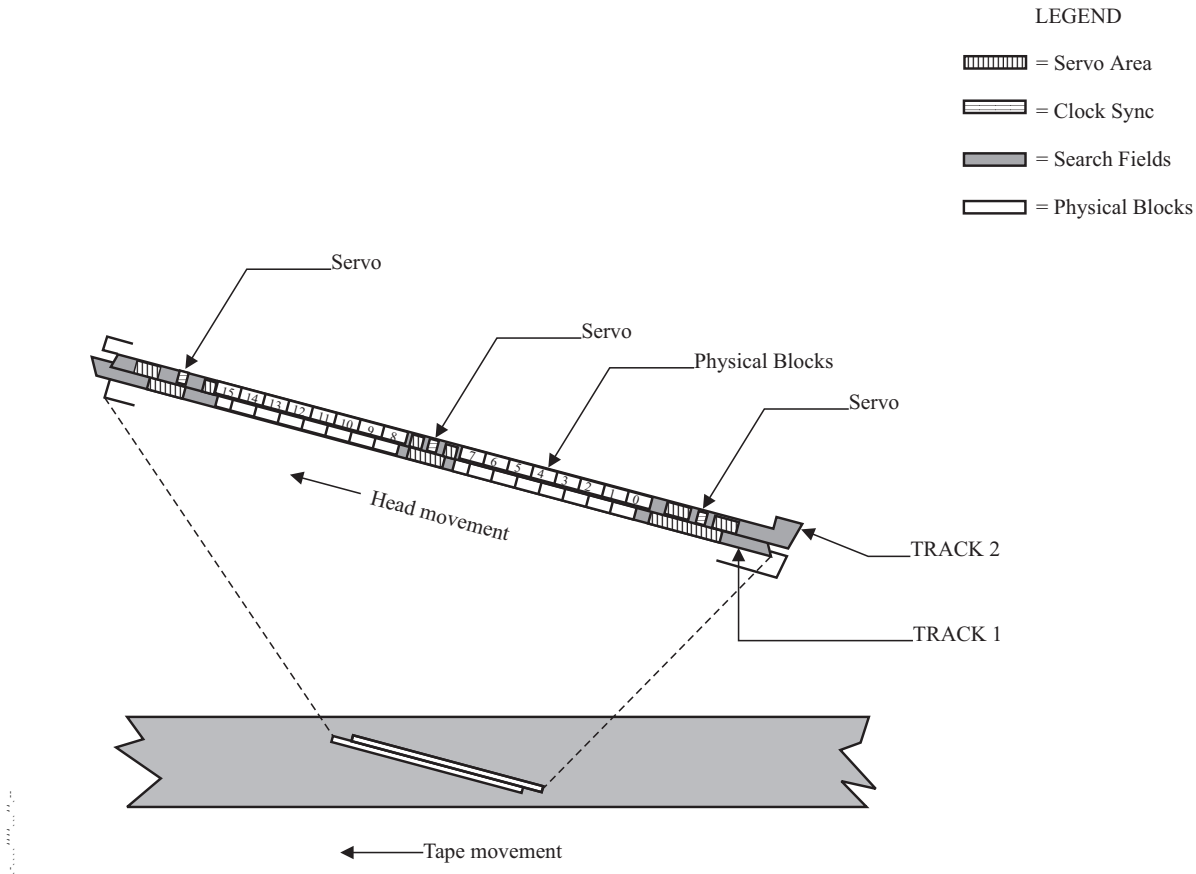

Figure 28 - Track format

Copyright International Organization for Standardization
Provided by IHS under license with ISO
No reproduction or networking permitted without license from IHS
Not for Resale

11.2 Physical block format

11.2.1 General

The format allows for 32 different physical block types. This format defines 10 of the 32 physical block types as shown in table 1. The remaining 22 physical block types are reserved for future use.

Table 1 - Physical block types

Block ID	Definition
(0)	Data
(5)	Erase
(8)	Diagnostic
(9)	Physical Beginning of Partition
(A)	Long File Mark
(B)	Short File Mark
(C)	Logical Beginning of Partition
(D)	Set Mark
(E)	Gap
(F)	End Of Data

Each physical block shall include the following information

24 bytes of header data
1014 bytes of data
2 bytes of cyclic redundancy check (CRC) data
400 bytes of error correction code (ECC) data.

The contents of the header data area and the data area are dependent on the physical block type and are defined in 11.2.2 to 11.2.12.

The 1440 bytes shall be loaded into a 60 column by 24 row information matrix shown in figure 29. Each cell of the matrix shall consist of one byte of data. The data shall be loaded into the information matrix as follows.

- The 24 bytes of header data shall be loaded sequentially into column 00, rows 00 to 19 and column 02, rows 00 to 03.
- The 1014 bytes of data shall be loaded sequentially into the matrix with the first 16 bytes loaded in column 02, rows 04 to 19. The next 20 bytes shall be loaded into column 04, rows 00 to 19. The loading shall continue to the even numbered columns to column 50, rows 00 to 19, and then the odd numbered columns 01 to 49, rows 00 to 19. Finally, the last 18 data bytes shall be loaded into column 51 rows 00 to 17.
- The two bytes of CRC data shall be generated according to annex D, and shall be loaded in column 51, rows 18 and 19.
- The 400 bytes ECC shall be generated according to annex E. The 160 horizontal ECC bytes shall be loaded into columns 52 to 59, rows 00 to 19. The 240 vertical ECC bytes shall be loaded into columns 00 to 59, rows 20 to 23.
-

Copyright International Organization for Standardization
Provided by IHS under license with ISO
No reproduction or networking permitted without license from IHS Not for Resale

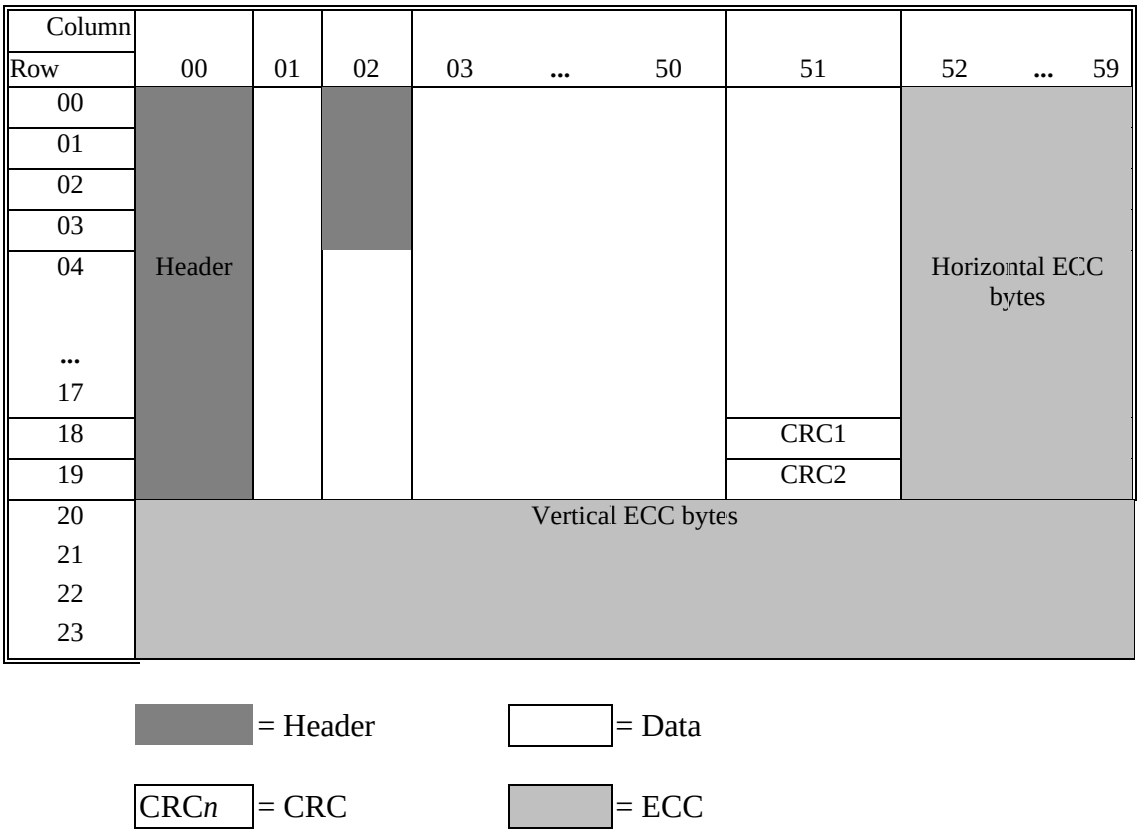

Figure 29 - Information matrix

11.2.2 Common header fields

The following fields are common and are used in more than one header.

11.2.2.1 Physical Identifier (PID)

The PID shall be a 4-byte counter of physical blocks on tape and shall define the absolute position on tape. Each physical block written regardless of type, shall have the next sequential PID number. The blank areas between partitions shall have PID numbers assigned, even though they are never written. The first physical block of the Tape History Log shall be assigned PID number set to (0000F040). The PID of the first partition on tape shall be assigned PID number set to (00014B80).

11.2.2.2 Block Identifier (BID)

The BID shall be a 4-byte counter indicating the sequence of logical blocks as they are received from the host. The BID shall be set to (00000000) at the beginning of each partition. The first physical block containing host information shall have a BID set to (00000001). The BID shall be incremented by 1 for each subsequent physical block.

11.2.2.3 Stream Identifier (SID)

The SID shall be a 1-byte counter used to identify invalid physical blocks in a sequence of physical blocks during a write. The SID shall be incremented by 1 every time tape motion stops.

11.2.2.4 Rwtstat

Rwtstat is a 2-bit field that shall indicate the rewrite status of a physical block. Its value shall be set as follows:

00 shall indicate that the physical block is the first instance of a physical block.

01 is reserved for future use and shall not be used.

10 shall indicate that the physical block was rewritten after a failed RBC.

11 shall indicate that the physical block was rewritten for another reason than a failed RBC. This setting shall be ignored for interchange.

--`,,```,,,,````-`-`,,`,,`,`,,`---

Copyright International Organization for Standardization
Provided by IHS under license with ISO
No reproduction or networking permitted without license from IHS Not for Resale

11.2.2.5 Set Mark Identifier (SMID)

The SMID shall be a 3-byte field that shall indicate the set to which the physical block belongs. The SMID shall be set to (000000) for all physical blocks up to and including the first Set Mark written in a partition. It shall be incremented by 1 after each Set Mark is written.

11.2.2.6 File Identifier (FID)

The FID shall be a 4-byte counter that shall indicate the file to which the physical block belongs. The FID shall be set to (00000000) for all physical blocks up to and including the first File Mark written in a partition. It shall be incremented by 1 after each Short or Long File Mark is written.

11.2.2.7 Logical Block Identifier (LID)

The LID shall be a 4-byte counter that counts the Logical Blocks sent from the host system. The first Logical Block within a Partition shall have a LID set to (00000000). The LID shall be incremented by 1 for each Logical Block, File Mark or Set Mark written. The LID loaded into the Header data shall be the LID of the first Logical Block partially or wholly contained in the physical block.

11.2.3 Data Block

Data Blocks shall be used to record host data bytes. The data in the Data Block may have been processed by a compression algorithm. Depending on the Logical Block size, a Logical Block may span physical blocks, or Logical Blocks may be contained in a physical block.

11.2.3.1 Data Block Header

Byte\Bit	7	6	5	4	3	2	1	0
00 - 03	PID							
04 - 07	BID							
08	(resv)							
09	rwcount							
10	SID							
11	RwtStat	(resv)		0	0	0	0	0
12	(resv)							
13 - 15	SMID							
16 - 19	FID							
20 - 23	LID							

Figure 30 - Data Block header

The Data Block header shall be as shown in figure 30. The byte rwcount shall be a 1-byte counter used to identify the copy of a physical block. For the first instance of the physical block, the count shall be set to 0. Each time a physical block is rewritten, this count shall be incremented by 1. The LID shall be the LID of the first Logical Block partially or wholly contained in the Data Block.

11.2.3.2 Data area

The data area shall contain data sent from the host. There shall be a 2-byte Logical Block Header preceding each Logical Block. If a Logical Block spans more than 1 physical block, there shall be a Logical Block Header in the first two bytes of the data area of the next Data Block preceding the continuation of the Logical Block. There shall be a 2-byte Logical Block CRC following each Logical Block.

11.2.3.2.1 Logical Block Header (LBH)

	7	6	5	4	3	2	1	0
byte 0	NDB	(resv)	Appnd	Cmprsd	Last	End	Length msb	
byte 1	Length							lsb

Figure 31 - Logical Block header

The fields of the LBH shown in Figure 31 shall be defined as follows.

NDB - This bit shall be set to ONE for all Logical Blocks that do not contain host data. If the Logical Block contains host data, this bit shall be set to ZERO.

Copyright International Organization for Standardization
Provided by IHS under license with ISO
No reproduction or networking permitted without license from IHS
Not for Resale

Appnd - This bit shall be set to ONE if the Logical Block is a continuation of a Logical Block from the previous Data Block, otherwise it shall be set to ZERO.

Cmprsd - This bit shall be set to ONE if the data in the Logical Block has been processed by a compression algorithm, otherwise it shall be set to ZERO.

Last - This bit shall be set to ONE if the Logical Block is the last Logical Block in this Data Block, otherwise it shall be set to ZERO.

End - This bit shall be set to ONE if the Logical Block ends in this Data Block, otherwise it shall be set to ZERO.

Length - This 10-bit number shall be 1 less than the count of bytes of this Logical Block that are contained in the Data Block inclusive of the two byte Logical Block CRC if the Logical Block ends in the Data Block.

11.2.3.2.2 Logical Block CRC

The 2-byte Logical Block CRC shall be generated according to annex F.

11.2.4 Erase Block

Erase Blocks shall be used to overwrite old data on tape.

11.2.4.1 Erase Block Header

Byte\Bit	7	6	5	4	3	2	1	0
0 - 3	PID							
4 - 9	(resv)							
10	SID							
11	(resv)			0	0	1	0	1
12 - 23	(resv)							

Figure 32 - Erase Block header

The Erase Block header shall be as shown in figure 32.

11.2.4.2 Data area

The data area of an Erase Block is undefined and shall be ignored for interchange.

11.2.5 Diagnostic Block

Diagnostic Blocks may be written periodically on tape to provide device specific information on how well the tape drive or media is performing.

11.2.5.1 Diagnostic Block Header

Byte\Bit	7	6	5	4	3	2	1	0
0 - 3	PID							
4 - 7	DID							
8 - 9	(resv)							
10	SID							
11	(resv)			0	1	0	0	0
12 - 23	(resv)							

Figure 33 - Diagnostic Block header

The Diagnostic Block header shall be as shown in figure 33. The Diagnostic ID (DID) shall be set to (00000000) for the first Diagnostic Block written on tape and incremented by 1 for each subsequent Diagnostic Block written.

11.2.5.2 Data area

The data area of the Diagnostic Block is device specific and shall be ingored during interchange.

11.2.6 Physical Beginning of Partition (PBOP) Block

PBOP Blocks shall be used to mark the beginning of a partition.

Copyright International Organization for Standardization
Provided by IHS under license with ISO
No reproduction or networking permitted without license from IHS Not for Resale

11.2.6.1 PBOP Block Header

Byte\Bit	7	6	5	4	3	2	1	0
00 - 03	**PID**							
04 - 07	**BID**							
08 - 09	**(resv)**							
10	**SID**							
11	(resv)			0	1	0	0	1
12 - 17	(resv)							
18	TotalPars							
19	CurPartNum							
20 - 23	(resv)							

Figure 34 - PBOP Block header

The PBOP Block header shall be as shown in figure 34. The BID field shall be set to (00000000). The unique fields shall be defined as follows.

TotalParts - This byte shall be the total count of partitions on the tape. The valid count shall be (1) to (40).

CurPartNum - This byte shall be the number of the current partition. The valid numbers shall be (0) to (3F).

11.2.6.2 Data area

The data area of a PBOP Block is undefined and shall be ignored for interchange.

11.2.7 Long File Mark Block

Long File Mark Blocks shall be used to separate files and provide append points on the tape, and shall be written at the request of the host.

11.2.7.1 Long File Mark Block Header

Byte\Bit	7	6	5	4	3	2	1	0
00 - 03	PID							
04 - 07	BID							
08 - 09	(resv)							
10	SID							
11	(resv)			0	1	0	1	0
12	(resv)							
13 - 15	SMID							
16 - 19	FID							
20 - 23	LID							

Figure 35 - Long File Mark Block header

The Long File Mark Block header shall be as shown in figure 35.

11.2.7.2 Data area

The data area of a Long File Mark Block shall contain a LBH with the NDB bit set to ZERO. The LBH shall be followed by 4-bytes of data. The data bytes shall contain the PID number for the append point to be used if the Long File Mark was to be overwritten. The remaining data bytes are not defined and shall be ignored for data interchange.

11.2.8 Short File Mark Block

Short File Marks shall be used to separate data and shall be written at the request of the host.

Copyright International Organization for Standardization
Provided by IHS under license with ISO
No reproduction or networking permitted without license from IHS Not for Resale

11.2.8.1 Short File Mark Block header

Byte\Bit	7	6	5	4	3	2	1	0
0 - 3	PID							
4 - 7	BID							
8 - 9	(resv)							
10	SID							
11	RwtStat	(resv)		0	1	0	1	1
12	(resv)							
13 - 15	SMID							
16 - 19	FID							
20 - 23	LID							

Figure 36 - Short File Mark Block header

The Short File Mark Block header shall be as shown in figure 36.

11.2.8.2 Data area

The data area of a Short File Mark Block is undefined and shall be ignored for interchange.

11.2.9 Logical Beginning of Partition (LBOP) Block

LBOP Blocks shall be used to define the characteristics of the partition.

11.2.9.1 LBOP Block header

Byte\Bit	7	6	5	4	3	2	1	0
00 - 03	PID							
04 - 07	BID							
08 - 09	(resv)							
10	SID							
11	(resv)			0	1	1	0	0
12 -13	(resv)							
14	LBCRC	REW	(resv)	(resv)	ClstrSize			
15	(resv)							
16	ComprsAlg							
17	(resv)						1	0
18	TotalPars							
19	CurPartNum							
20 - 23	(resv)							

Figure 37 - LBOP Block header

The LBOP Block header shall be as shown in figure 37. The BID shall be set to (00000000). The unique fields shall be defined as follows.

LBCRC - This bit shall be set to ONE if all Logical Blocks within the partition have the 2-byte Logical Block CRC following the Logical Block.

REW - This bit shall be set to ONE if physical blocks are to be rewritten in this partition, otherwise it shall be set to ZERO.

ClstrSize - This 4-bit field shall contain the number of physical blocks assigned to each Cluster. For this International Standard, the valid values for this field shall be (1), (2), (3) and (4).

ComprsAlg - This byte shall specify, in binary notation, the identifier of the registered algorithm according to ISO/IEC 11576.

TotalParts - This byte shall be the total count of partitions on the tape. The valid count shall be (01) to (40).

CurPartNum - This byte shall be the number of the current partition. The valid numbers shall be (00) to (3F).

Copyright International Organization for Standardization
Provided by IHS under license with ISO
No reproduction or networking permitted without license from IHS
Not for Resale

11.2.9.2 Data area

The data area of a LBOP Block contains the partition mapping information for all partitions on the tape. Each partition shall have a partition record containing the size and location of the partition as shown in figure 38.

Byte\Bit	7	6	5	4	3	2	1	0
0 - 1	LBH							
2 - 3	PartSize							
4 - 7	PBOP PID							
8 - 11	PEOP PID							

Figure 38 - Partition record

The fields of the partition record shall be defined as follows.

PartSize - This two byte field shall be the length, in megabytes, of the data area of the partition.

PBOP PID - This four byte field shall contain the PID of the first PBOP Block of the partition.

PEOP PID - This four byte field shall contain the PID of the last physical block that can be written in the partition. This PID shall be the last physical block of track two.

The partition records shall be arranged in the data area as shown in figure 39. The fields shall be defined as follows.

Byte\Bit	7	6	5	4	3	2	1	0
0-1	LBH							
2-15	Tape ID							
16-27	Partition Record 0							
28-39	Partition Record 1							
...								

Figure 39 - Partition data area

Tape ID - These bytes shall be device specific and shall be ignored for interchange.

The partition records shall be ordered from lowest partition number to highest.

11.2.10 Set Mark Block

Set Mark Blocks shall be used to separate groups of data and to provide append points on the tape. Set Marks shall be written at the request of the host.

11.2.10.1 Set Mark Block Header

Byte\Bit	7	6	5	4	3	2	1	0
00 - 03	PID							
04 - 07	BID							
08 - 09	(resv)							
10	SID							
11	(resv)			0	1	1	0	1
12	(resv)							
13 - 15	SMID							
16 - 19	FID							
20 - 23	LID							

Figure 40 - Set Mark Block header

Set Mark headers shall be as shown in figure 40.

Copyright International Organization for Standardization
Provided by IHS under license with ISO
No reproduction or networking permitted without license from IHS Not for Resale

11.2.10.2 Data area

The data area of a Set Mark Block shall contain a LBH with the NDB bit set to Zero. The LBH shall be followed by four bytes of data. The data bytes shall contain the PID number for the append point to be used if the Set Mark were to be overwritten

11.2.11 Gap Block

Gap Blocks shall be used to pad an incomplete track when finishing a write operation.

11.2.11.1 Gap Block Header

Byte\Bit	7	6	5	4	3	2	1	0
00 - 03	PID							
04 - 07	ABID							
08 - 09	(resv)							
10	SID							
11	(resv)			0	1	1	1	0
12 - 23	(resv)							

Figure 41 - Gap Block header

Gap Block headers shall be as shown in figure 41. The fields shall be defined as follows.

ABID - This four byte field shall contain the smallest BID written such that no larger BID will occur between the end of the previous track pair and LBOP.

11.2.11.2 Data area

The data area of a Gap Block is undefined and shall be ignored for interchange.

11.2.12 End of Data (EOD) Block

EOD Block shall be used to mark the end of written data in a partition.

11.2.12.1 EOD Block header

Byte\Bit	7	6	5	4	3	2	1	0
00 - 03	PID							
04 - 07	BID							
08 - 09	(resv)							
10	SID							
11	(resv)			0	1	1	1	1
12	(resv)							
13 - 15	SMID							
16 - 19	FID							
20 - 23	LID							

Figure 42 - EOD Block header

EOD Block headers shall be as shown in figure 42.

11.2.12.2 Data area

The data area of an EOD Block shall contain a LBH with the NDB bit set to Zero. The LBH shall be followed by four bytes of data. The data bytes shall contain the PID number for the append point to be used if the EOD were to be overwritten. The remaining data bytes are not defined and shall be ignored for data interchange.

11.2.13 Recorded patterns

Data from the information matrix shall be recorded sequentially on the tape in 48 segments numbered from 0 to 47. Each segment shall contain a 20-bit synchronization field followed by a 10-bit segment ID and 30 bytes from the information matrix.

11.2.13.1 Bit synchronization field

The bit synchronization field shall be set to 0 1 1 1 1 1 1 1 1 1 1 1 1 1 1 1 1 0 1.

11.2.13.2 Segment ID

The 10-bit patterns for each segment ID shall be as shown in table 2.

Copyright International Organization for Standardization
Provided by IHS under license with ISO
No reproduction or networking permitted without license from IHS Not for Resale

Table 2 - Segment ID patterns

Data Segment ID	Code Word
0	0 1 1 1 1 1 1 1 0 1
1	0 1 1 1 1 1 1 0 1 0
2	0 1 1 1 1 1 0 1 1 1
3	0 1 1 1 1 1 0 1 0 1
4	0 1 1 1 1 0 1 1 1 0
5	0 1 1 1 1 0 1 0 1 1
6	0 1 1 1 0 1 1 1 1 1
7	0 1 1 1 0 1 1 1 0 1
8	0 1 1 1 0 1 0 1 1 1
9	0 1 1 1 0 1 0 1 0 1
10	0 1 1 0 1 1 1 1 1 0
11	0 1 1 0 1 1 1 0 1 1
12	0 1 1 0 1 0 1 1 1 1
13	0 1 1 0 1 0 1 0 1 0
14	0 1 0 1 1 1 1 1 1 1
15	0 1 0 1 1 1 1 1 0 1
16	0 1 0 1 1 1 0 1 1 1
17	0 1 0 1 1 1 0 1 0 1
18	0 1 0 1 0 1 1 1 1 1
19	0 1 0 1 0 1 1 1 0 1
20	0 1 1 1 0 1 1 0 1 0
21	0 1 1 0 1 0 1 1 0 1
22	0 1 0 1 1 1 1 0 1 0
23	0 1 0 1 1 0 1 1 1 0

Data Segment ID	Code Word
24	0 1 0 1 1 0 1 0 1 1
25	0 1 0 1 0 1 1 0 1 0
26	0 0 1 0 1 0 1 0 1 1
27	0 0 1 0 1 0 1 1 1 0
28	0 0 1 0 1 1 0 1 0 1
29	0 0 1 0 1 1 0 1 1 1
30	0 0 1 0 1 1 1 0 1 0
31	0 0 1 0 1 1 1 1 0 1
32	0 0 1 0 1 1 1 1 1 1
33	0 0 1 1 0 1 0 1 1 0
34	0 0 1 1 1 0 1 0 1 0
35	0 0 1 1 1 0 1 1 0 1
36	0 0 1 1 1 0 1 1 1 1
37	0 0 1 1 1 1 1 0 1 1
38	0 0 1 1 1 1 1 1 1 0
39	1 0 1 0 1 0 1 0 1 1
40	1 0 1 0 1 0 1 1 1 0
41	1 0 1 0 1 1 0 1 0 1
42	1 0 1 0 1 1 0 1 1 1
43	1 0 1 0 1 1 1 0 1 0
44	1 0 1 0 1 1 1 1 0 1
45	0 1 0 1 0 1 0 1 1 1
46	0 1 0 1 0 1 0 1 0 1
47	1 0 1 1 1 1 1 0 1 1

11.2.13.3 Information matrix

The data for each segment shall be randomized according to annex J. The 30 bytes of data shall be encoded into Channel bits using 8 to 10 conversion according to annex C. The data in the information matrix shall be allocated to the 48 segments in the following order.

Segment 0 row 00, columns 00 to 29

Segment 1 row 00, columns 30 to 59

Segment 2 row 01, columns 00 to 29

Segment 3 row 01, columns 30 to 59

.
.
.

Segment 46 row 23, columns 00 to 29

Segment 47 row 23, columns 30 to 59

11.3 Search field format

11.3.1 Search field data

The format of the search field data shall be as shown in figure 43.

--`,,```,,,,````-`-`,,`,,`,`,,`---
Copyright International Organization for Standardization
Provided by IHS under license with ISO
No reproduction or networking permitted without license from IHS Not for Resale

Byte\Bit	7	6	5	4	3	2	1	0
00	Partition							
01 - 03	SMID							
04 - 07	FID							
08 - 11	LID							
12 - 15	PID							
16 - 19	ABID							
20 - 23	DBID							
24	EOM	BOP	THL	ERASE	(resv)			
25	(resv)							
26	PSID							
27	SID							

Figure 43 - Search field data

The fields of the search field data shall be defined as follows.

Partition - This 1-byte field shall contain the partition number of the current partition.

SMID - This 3-byte field shall contain the Set Mark number of the next Set Mark to be written. Search fields on both tracks of a Set Mark track pair shall have a SMID that is equal to the SMID in the header block of the Set Mark Block.

FID - This 4-byte field shall contain the File Mark number of the next File Mark to be written. Search fields on both tracks of a Long File Mark track pair shall have a FID that is equal to the FID in the header block of the Long File Mark Block. The FID of the search field on the track following a Short File Mark shall be equal to the FID in the block header of the last Short File Mark Block on the previous track.

LID - This 4-byte field shall contain the largest Logical Block number written to tape before the track containing this search field.

PID - This 4-byte field shall contain the PID number of the last physical block on the previously written track.

ABID - This 4-byte field shall contain the smallest BID written such that no larger BID will occur between the end of the previous track pair and LBOP.

DBID - This 4-byte field shall contain the largest BID written such that no smaller BID will occur between the end of the previous track pair and EOD in this partition.

EOD - This bit shall be set to ONE when the search field is located in one of the EOD tracks. In all other cases this bit shall be set to ZERO.

BOP - This bit shall be set to ONE when the search field is located in one of the LBOP or PBOP tracks. In all other cases this bit shall be set to ZERO.

THL - This bit shall be set to ONE when the search field is located in the Tape History Log. In all other cases this bit shall be set to ZERO.

Erase - This bit shall be set to ONE when the search field is written as part of an erase operation.In all other cases this bit shall be set to ZERO.

PSID - This byte shall be set to ZERO the first time a tape is partitioned. It shall be incremented by 1 each time the tape is repartitioned.

SID - The SID shall be a 1-byte counter used to identify invalid physical blocks in a sequence of physical blocks during a write. The SID shall be incremented by 1 every time tape motion stops.

11.3.2 Search field ECC

A 5-bit Hamming code ECC shall be added to each byte for the search field data as shown in figure 44. The generation of the Hamming code ECC is defined in annex G. A 2-byte CRC shall be generated from the search field data according to annex H and appended to the end of the search field data. Two 5-bit CRC characters shall be generated as defined in annex G over the ECC characters and added to the column of ECC characters.

--`,,```,,,,````-`-`,,`,,`,`,,`---

Copyright International Organization for Standardization
Provided by IHS under license with ISO
No reproduction or networking permitted without license from IHS Not for Resale

12	11	10	9	8	7	6	5	4	3	2	1	0
Data (00)								ECC(00)				
Data (01)								ECC (01)				
Data (02)								ECC (02)				
Data (03)								ECC (03)				
Data (04)								ECC (04)				
Data (05)								ECC (05)				
Data (06)								ECC (06)				
Data (07)								ECC (07)				
Data (08)								ECC (08)				
Data (09)								ECC (09)				
Data (0A)								ECC (0A)				
Data (0B)								ECC (0B)				
Data (0C)								ECC (0C)				
Data (0D)								ECC (0D)				
Data (0E)								ECC (0E)				
Data (0F)								ECC (0F)				
Data (10)								ECC (10)				
Data (11)								ECC (11)				
Data (12)								ECC (12)				
Data (13)								ECC (13)				
Data (14)								ECC (14)				
Data (15)								ECC (15)				
Data (16)								ECC (16)				
Data (17)								ECC (17)				
Data (18)								ECC (18)				
Data (19)								ECC (19)				
Data (1A)								ECC (1A)				
Data (1B)								ECC (1B)				
CRC Hi								ECC CRC Hi				
CRC Lo								ECC CRC Lo				

Figure 44 - Search field layout with ECC

11.3.3 Search field recording patterns

The search field shall be preceded by 160 Channel bits set to ONE. This clock detect area shall be followed by 20 synchronization bits set to

0 1 1 1 1 1 1 1 1 1 1 1 1 1 1 1 1 1 1 0

The 20 synchronization bits shall be followed by a 10-bit search field identifier (SFID). The SFID shall be set to 1 1 0 1 1 0 1 1 0 1 for track 1 search field numbers 3, 9 and 16 (see figure 46). For all other search fields the SFID shall be set to 1 0 1 0 1 0 1 1 0 1. The 49 bytes of search field data shall be removed from the matrix vertically according to figure 45 with vertical byte 0 being the first byte encoded. Two bits set to ZERO shall be added to complete byte 48. The bytes shall be encoded into channel bits using 8 to 10 conversion according to annex C.

--`,,```,,,,````-`-`,,`,,`,`,,`---

Copyright International Organization for Standardization
Provided by IHS under license with ISO
No reproduction or networking permitted without license from IHS Not for Resale

	b12	b11	b10	b9	b8	b7	b6	b5	b4	b3	b2	b1	b0
Word 0	msb												
Word 1													
Word 2													
Word 3	0			11				26	30			41	
Word 4					15					34			45
Word 5		4				19							
Word 6			8				23				38		
Word 7	lsb			12				27				42	
Word 8													
Word 9					16				31				46
Word 10						20				35			
Word 11	1												
Word 12		5					24				39		
Word 13			9					28				43	
Word 14				13					32				
Word 15					17					36			47
Word 16						21							
Word 17							25				40		
Word 18		6						29				44	
Word 19	2		10						33				48
Word 20				14									
Word 21					18					37			
Word 22						22							
Word 23													
Word 24													
Word 25													
Word 26	3												
Word 27													
CRC 1		7											
CRC 2													

Figure 45 - Search field layout

11.4 Servo area

There shall be three servo areas located on track 2 of each track pair. Each servo area shall be preceded and followed by a servo pad area written at 955 ftpmm (4T). The servo areas shall be written at 76,38 ftpmm (Tone).

--`,,```,,,,````-`-`,,`,,`,`,,`---

Copyright International Organization for Standardization
Provided by IHS under license with ISO
No reproduction or networking permitted without license from IHS
Not for Resale

11.5 Track layout

The layout of the track elements defined in the previous clauses shall be as shown in figure 46 and figure 47.

Element	Bit Cells	Data		Element	Bit Cells	Data
PREAMBLE	2700	1's		SF10 Sync	160	1's
SF0 Data	520	Data		SF10 Data	520	Data
SF1 Sync	160	1's		SF11 Sync	160	1's
SF1 Data	520	Data		SF11 Data	520	Data
SF2 Sync	160	1's		SF12 Sync	160	1's
SF2 Data	520	Data		SF12 Data	520	Data
SF3 Sync	160	1's		Clock Sync	160	1's
SF3 Data	520	Data		Data B8	15840	Data
Pad 0	2000	4T		Data B9	15840	Data
SF4 Sync	160	1's		Data B10	15840	Data
SF4 Data	520	Data		Data B11	15840	Data
Clock Sync	160	1's		Data B12	15840	Data
Data B0	15840	Data		Data B13	15840	Data
Data B1	15840	Data		Data B14	15840	Data
Data B2	15840	Data		Data B15	15840	Data
Data B3	15840	Data		SF13 Sync	160	1's
Data B4	15840	Data		SF13 Data	520	Data
Data B5	15840	Data		SF14 Sync	160	1's
Data B6	15840	Data		SF14 Data	520	Data
Data B7	15840	Data		SF15 Sync	160	1's
SF5 Sync	160	1's		SF15 Data	520	Data
SF5 Data	520	Data		SF16 Sync	160	1's
SF6 Sync	160	1's		SF16 Data	520	Data
SF6 Data	520	Data		Pad 2	2000	4T
SF7 Sync	160	1's		SF17 Sync	160	1's
SF7 Data	520	Data		SF17 Data	520	Data
SF8 Sync	160	1's		SF18 Sync	160	1's
SF8 Data	520	Data		SF18 Data	520	Data
SF9 Sync	160	1's		SF19 Sync	160	1's
SF9 Data	520	Data		SF19 Data	520	Data
Pad 1	2000	4T		POSTAMBLE	4960	1's
				TOTAL	280860	

Figure 46 - Track 1 layout

Copyright International Organization for Standardization
Provided by IHS under license with ISO
No reproduction or networking permitted without license from IHS
Not for Resale

Element	Bit Cells	Data				
PREAMBLE	4740	1's		SF7 Sync	160	1's
SF0 Data	520	Data		SF7 Data	520	Data
SF1 Sync	160	1's		SF8 Sync	160	1's
SF1 Data	520	Data		SF8 Data	520	Data
SF2 Sync	160	1's		SF9 Sync	160	1's
SF2 Data	520	Data		SF9 Data	520	Data
SV Pad	960	4T		Clock Sync	160	1's
Servo Zone 0	900	Tone		Data B8	15840	Data
SV Pad	1020	4T		Data B9	15840	Data
SF3 Sync	160	1's		Data B10	15840	Data
SF3 Data	520	Data		Data B11	15840	Data
Clock Sync	160	1's		Data B12	15840	Data
Data B0	15840	Data		Data B13	15840	Data
Data B1	15840	Data		Data B14	15840	Data
Data B2	15840	Data		Data B15	15840	Data
Data B3	15840	Data		SF10 Sync	160	1's
Data B4	15840	Data		SF10 Data	520	Data
Data B5	15840	Data		SF11 Sync	160	1's
Data B6	15840	Data		SF11 Data	520	Data
Data B7	15840	Data		SV Pad	1440	4T
SF4 Sync	160	1's		Servo Zone 2	900	Tone
SF4 Data	520	Data		SV Pad	1020	4T
SF5 Sync	160	1's		SF12 Sync	160	1's
SF5 Data	520	Data		SF12 Data	520	Data
SF6 Sync	160	1's		SF13 Sync	160	1's
SF6 Data	520	Data		SF13 Data	520	Data
SV Pad	1440	4T		SF14 Sync	160	1's
Servo Zone 1	900	Tone		SF14 Data	520	Data
SV Pad	1020	4T		POSTAMBLE	2720	1's
				TOTAL	280860	

Figure 47 - Track 2 layout

12 Method of recording

The method of recording shall be as follows.

– A ONE shall be represented by a flux transition at the centre of a bit cell.

– A ZERO shall be represented by no flux transitions in the bit cell.

12.1 Physical Recording Density

The nominal maximum physical recording density shall be 3 819 ftpmm and occurs for a pattern of all ONEs.

The resulting nominal bit cell length is 0,262 µm.

12.1.1 Long Term Average Bit Cell Length

The long-term average bit cell length for each track shall be measured over a minimum of 133 060 consecutive bit cells. It shall be within 0,20 % of the nominal bit cell length.

Copyright International Organization for Standardization
Provided by IHS under license with ISO
No reproduction or networking permitted without license from IHS
Not for Resale

12.1.2 Short Term Average Bit Cell Length

The short-term average bit cell length shall be the average taken over any 16 bit cells. The short-term average bit cell length shall be within 0,35 % of the long-term average bit cell length for the preceding track.

12.1.3 Rate of Change

The rate of change of the short-term average bit cell length, taken over any two consecutive 16-bit cell lengths, shall not exceed 0,05 %.

12.2 Bit Shift

The maximum displacement of any ONEs zero crossing, exclusive of missing pulses, shall not deviate by more than 25 % from the expected position as defined by the average bit cell length.

See Annex B for the method of measurement.

12.3 Amplitude of Data Signals

The signal amplitude averaged over a minimum of 3 000 flux transitions at 3 819 ftpmm shall be between 80% and 130 % of the Standard Reference Amplitude.

13 Track geometry

13.1 General

The helical track pattern is formed by the relationship between the direction of tape motion and the axis of rotation of a pair of heads, one of which has a positive azimuth angle and the other a negative azimuth angle. The direction of recording is away from the Tape Reference Edge. The track location and dimensions shall be shown in figure 48.

13.2 Average track pitch - C

The average track pitch taken over any group of 60 consecutive tracks shall be 11,50 µm ± 0,35 µm.

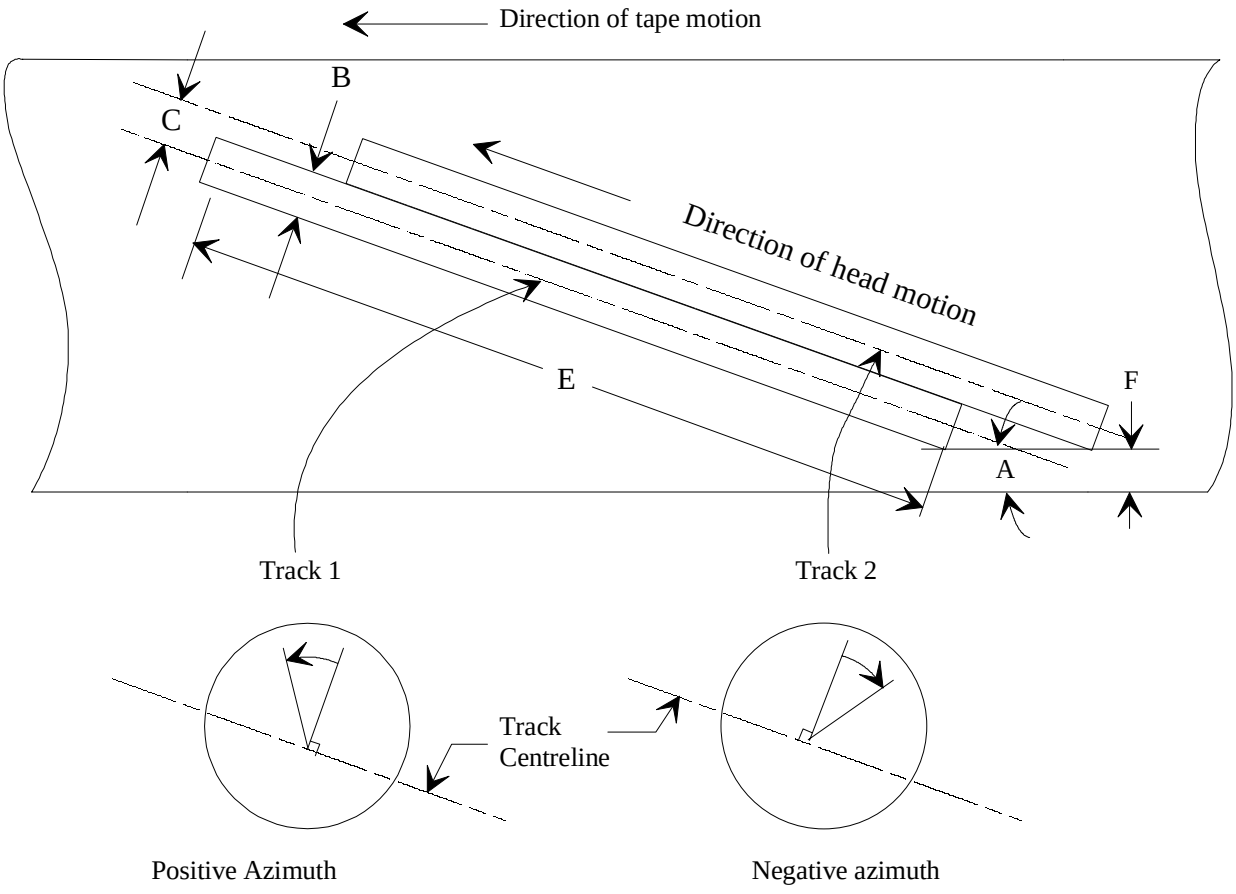

Figure 48 - Track location and dimensions

Copyright International Organization for Standardization
Provided by IHS under license with ISO
No reproduction or networking permitted without license from IHS
Not for Resale

13.3 Track pitch variation

The track pitch between any two adjacent tracks shall be 11,5 µm ± 1,7 µm.

13.4 Track width - B

The nominal track width is 11,5 µm.

13.5 Track angle - A

The nominal angle of each track with respect to the Tape Reference Edge shall be 4,896 0°.

13.6 Track length -E

The length of each track shall be 73,536 mm ± 0,228 mm.

13.7 Guard band - F

There shall be a guard band of width 870 µm ± 16 µm extending from the start of the recorded tracks to the Tape Reference Edge.

13.8 Azimuth angles

The positive azimuth angle shall be 20,009° ± 0,200°. The negative azimuth angle shall be 9,991° ± 0,200°.

13.9 Track linearity

The edge of each recorded track shall be contained between two parallel lines 6 µm apart. The parallel lines shall be at the nominal track angle with respect to the tape reference edge.

14 Layout of a tape

14.1 General

The layout of the tape is shown in figure 49. A tape shall consist of 1 to 64 partitions. The partitions shall be numbered with the highest partition number first and shall sequentially decrease with partition 0 being the last partition on the tape. The elements of the tape format are defined in the following clauses. A tape shall be erased by writing the entire tape with Erase Blocks. When a tape is formatted, each partition shall contain a PBOP, LBOP and EOD.

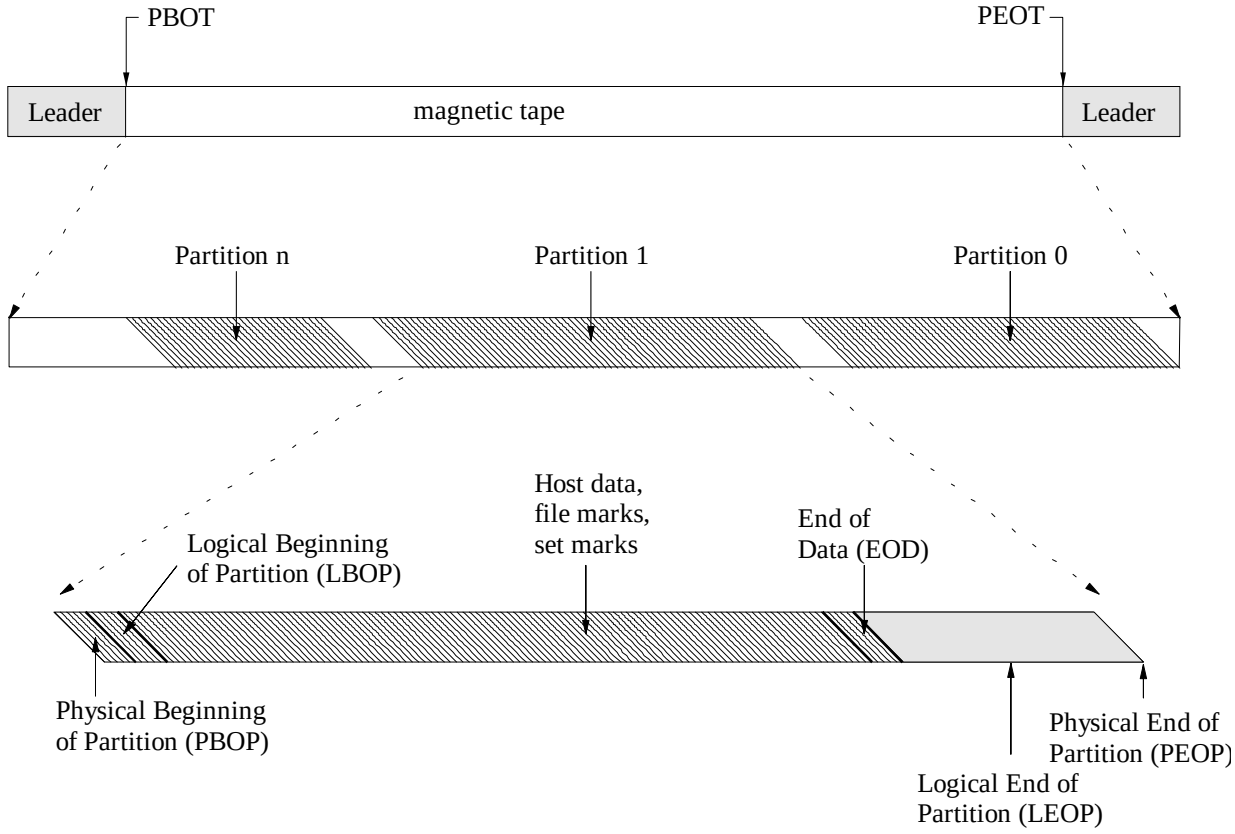

Figure 49 - Tape layout

Copyright International Organization for Standardization
Provided by IHS under license with ISO
No reproduction or networking permitted without license from IHS
Not for Resale

14.2 Tape History Log (THL)

The THL is a special partition and shall have a partition number of (FF). Recording of the THL shall begin 584 mm ± 10 mm from PBOT. The THL shall consist of 50 tracks of PBOP Blocks followed by 50 tracks of LBOP Blocks. The first PBOP Block shall begin with track 1 and the PID of the first PBOP Block shall be (0000F040). There may be up to 500 tracks of vendor defined Data Blocks in the THL and shall be ignored in interchange. The last data track shall be followed by 100 tracks of EOD Blocks.

14.3 Physical Beginning of Partition

All partitions shall begin with a PBOP. The PBOP shall consist of 300 tracks of PBOP Blocks. The first PBOP track shall begin with track 1. All PBOP Block headers shall be identical except for the PID. The PID shall indicate the position on tape. The BID shall be set to 0.

14.4 Logical Beginning of Partition

The LBOP shall be recorded immediately following the PBOP. The LBOP shall consist of 400 tracks of LBOP Blocks. The BID of all LBOP Blocks shall be 0.

14.5 Data area

14.5.1 General

The data area shall be recorded immediately following the LBOP. The data area shall consist of Data Blocks and Gap Blocks. File Marks and Set Marks shall be recorded at the request of the Host. Diagnostic Blocks may be recorded periodically in the data area. Clusters containing Data Blocks or Short File Mark Blocks may be rewritten if they contain errors. All physical blocks within the Cluster shall be rewritten if any physical blocks within the Cluster require rewriting. The block headers of the rewritten physical blocks shall be identical to the original block headers with the exception of the PID which indicates the location on tape. The DBID field shall determine whether a physical block is rewritten further down the tape. Clusters may be rewritten multiple times.

14.5.2 Short File Mark

A Short File Mark shall consist of 1 Short File Mark Block.

14.5.3 Long File Mark

A Long File Mark shall consist of 2 tracks of Gap Blocks followed by 2 tracks of Long File Mark Blocks followed by 2 more tracks of Gap Blocks. The first track of Long File Mark Blocks shall begin on track 1. All Long File Mark Blocks shall have the same BID. All Data Blocks shall be verified by RBC and rewritten before writing the Long File Mark.

14.5.4 Set Mark

A Set Mark shall consist of 2 tracks of Gap Blocks followed by 2 tracks of Set Mark Blocks followed by 2 more tracks of Gap Blocks. The first track of Set Mark Blocks shall begin on track 1. All Set Mark Blocks shall have the same BID. All Data Blocks shall be verified by RBC and rewritten before writing the Set Mark.

14.6 End of Data

The EOD shall be written immediately after the data area. It shall consist of 2 tracks of Gap Blocks followed by 400 tracks of EOD Blocks. The data area may be appended to by writing over the EOD.

14.7 Physical End of Partition (PEOP)

The PEOP is not recorded on the tape. It is the end point of the partition and prevents data in one partition from overwriting the next partition. The PEOP PID shall be recorded in the LBOP Block. All writing of host data shall cease when the PID matches the PEOP PID. An additional 32 tracks shall be written following the PEOP PID. The content of these tracks are not defined by this International Standard.

Copyright International Organization for Standardization
Provided by IHS under license with ISO
No reproduction or networking permitted without license from IHS
Not for Resale

Annex A

(normative)

Measurement of Light Transmittance of Tape and Leaders

A.1 Introduction

The following description outlines the general principle of the measuring equipment and measuring method to be applied when measuring the light transmittance of tape.

For the purpose of this International Standard "light transmittance" is defined by convention as the relationship between the reading obtained from the measuring equipment with the test piece inserted and the reading obtained when no test piece is present. The transmittance value is expressed as the percentage ratio of the two readings.

A.2 Description of the measuring equipment

The equipment shall consist of

- the radiation source;
- the radiation receiver;
- the measuring mask;
- the optical path;
- the measuring circuitry.

A.2.1 Radiation source

An infra-red light-emitting diode (LED) with the following parameters shall be used:

wavelength at peak emission : 850 nm ± 50 nm
half-power bandwidth : ± 50 nm

A.2.2 Radiation receiver

A flat silicon photo diode shall be used. It shall be operated in the short circuit mode.

A.2.3 Measuring mask

The measuring mask shall have a thickness of 2 mm and a circular aperture of diameter *d* such that the area is 80 % to 100 % of the active area of the photo diode.

The surface of the mask shall be matt black.

The test piece shall be held firmly against the mask to cover the aperture and to ensure that no ambient light leaks past.

A.2.4 Optical path (figure A.1)

The optical path shall be perpendicular to the mask. The distance from the emitting surface of the LED to the mask shall be

$$L = \frac{d}{2\tan\alpha} \text{ mm}$$

where *d* is in mm and α is the angle where the relative intensity of the LED is equal to, or greater than, 95% of the maximum intensity of the optical axis.

A.2.5 Finish

The whole assembly shall be enclosed in a matt black case.

A.2.6 Measuring circuitry (figure A.2)

The components of the measuring circuitry are

Copyright International Organization for Standardization
Provided by IHS under license with ISO
No reproduction or networking permitted without license from IHS Not for Resale

E : regulated power supply with variable output voltage
R : current-limiting resistor
LED : light-emitting diode
Di : silicon photo diode
A : operational amplifier
R_{f0}, R_{f1} : feedback resistors
S : gain switch
V : voltmeter

The forward current of the LED, and consequently its radiation power, can be varied by means of the power supply E.

Di is operating in the short circuit mode.

The output voltage of the operational amplifier is given by

$$V_0 = I_k \times R_f$$

where:

I_k is the short-circuit current of Di.

The output voltage is therefore a linear function of the light intensity.

R_{f0} and R_{f1} shall be low temperature-drift resistors with an accuracy of 1%. The following ratio applies

$$\frac{R_{f0}}{R_{f1}} = \frac{1}{20}$$

A.3 Measuring method

– Set switch S to position 0.

– With no test piece mounted vary the supply voltage of E until voltmeter V reads full scale (100 %).

– Mount a leader or trailer tape on the mask. The reading of the voltmeter shall be in the range 60 % to 100 %.

– Mount a test piece of magnetic tape on the mask. Set switch S to position 1. Full deflection of the voltmeter now represents a light transmittance of 5 %.

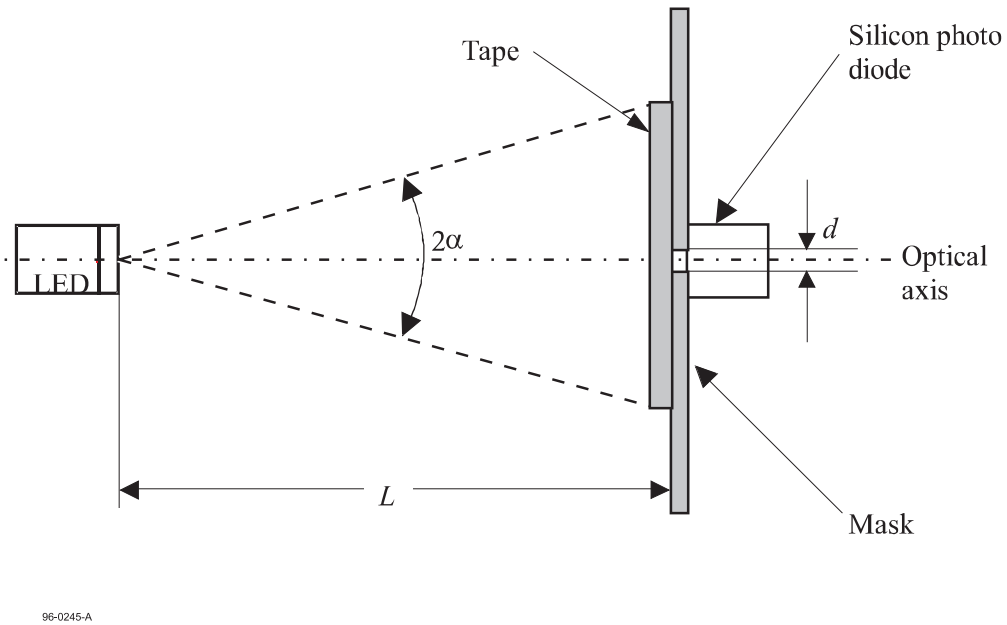

Figure A.1 - Optical arrangement

Copyright International Organization for Standardization
Provided by IHS under license with ISO
No reproduction or networking permitted without license from IHS
Not for Resale

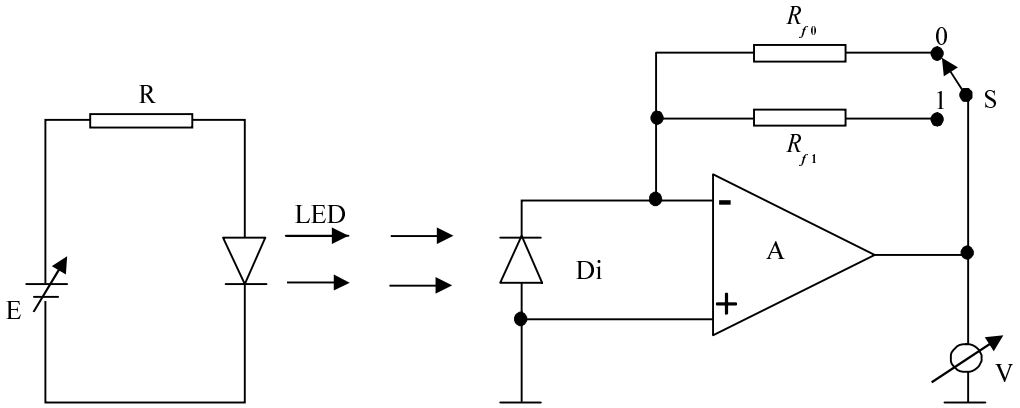

93-0124-A

Figure A.2 - Measuring circuitry

Copyright International Organization for Standardization
Provided by IHS under license with ISO
No reproduction or networking permitted without license from IHS
Not for Resale

Annex B

(normative)

Measurement of bit shift

B.1 Requirements for recording

The equipment normally used for recording interchange cartridges shall be used for recording the tape under test.

The tape shall be written in any mode compatible with system operation.

B.2 Requirements for reading

The tape shall be read on any tape transport which supports a linearity of the track edges within 6 µm.

There are no absolute requirements on the output voltage from the read head. However, the head design, the rotary transformer, the pre-amplifier, and the head to tape speed shall be chosen to avoid problems from low signal-to-noise ratios. The frequency response of the head, transformer, pre-amplifier and associated connections shall only be limited at the low end by the transformer and at the high end by the pre-amplifier.

Read Head

Gap length: 0,20 µm ± 0,02 µm

Track width: 11,5 µm ± 1,0 µm

Positive azimuth: $20{,}009^{o} \pm 0{,}200^{o}$

Negative azimuth: $9{,}991^{o} \pm 0{,}200^{o}$

Head-tape contact and read channel

The stability of the head-tape contact during the signal capture period, together with the overall frequency response of the head, the rotary transformer, the pre-amplifier and the equalizer shall be sufficient to give a signal-to-noise ratio of better than 15 dB.

B.3 Measurement

The average bit cell length L is obtained from any two reference zero crossings (RZC) located on either side of the test zero crossing (TZC). A reference zero crossing is a ONE zero crossing with at least two adjacent ONE zero crossings on each side. The RZCs shall not be more than 40 bit cells apart in order to keep the maximum error due to the rate of change below 2 %.

The requirement for bit shift specified in 12.2 shall be met when any user data has been recorded as specified in 11 to 14.

B.4 Data Analysis

Where: RZC is a reference zero crossing

TZC is the test zero crossing

P_n is the position of the n-th ONEs zero crossing

If n is the number of bit cells between reference zero crossings, the average bit cell length is

$$L = \frac{P_3 - P_1}{n}$$

If there are m bit intervals between the first reference zero crossing and the test zero crossing then:

Copyright International Organization for Standardization
Provided by IHS under license with ISO
No reproduction or networking permitted without license from IHS Not for Resale

$$\text{Bit shift} = \frac{\left|mL - \left(P_2 - P_1\right)\right|}{L} x100\%$$

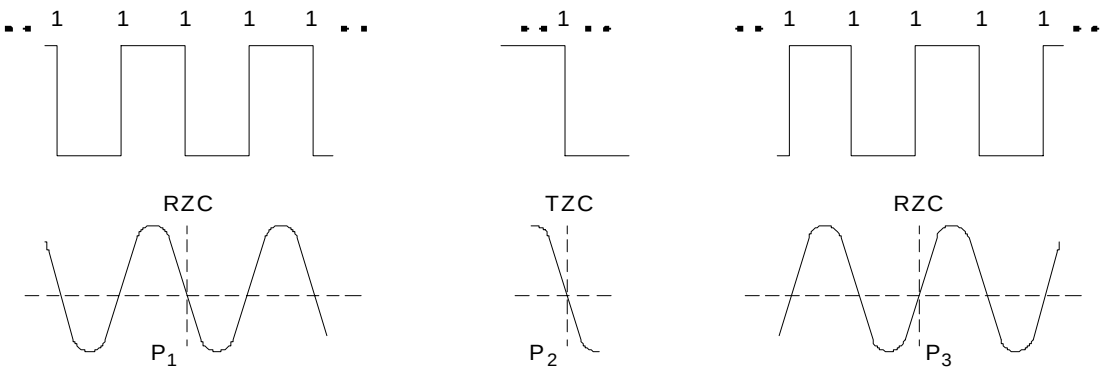

Figure B.1 - Measurement of waveform

Copyright International Organization for Standardization
Provided by IHS under license with ISO
No reproduction or networking permitted without license from IHS
Not for Resale

Annex C

(normative)

Representation of 8-bit bytes by 10-bit patterns

The following algorithm shall be used for 8 to 10 Bit Conversion

Input is the decimal value of the byte to be encoded

no_of_ones is 0 if there is an even number of ones in all previously recorded bits. no_of_ones is 1 if there is an odd number of ones in all previously recorded bits.

Charge is the charge value of all previously recorded bits. Charge is computed on the an NRZ data stream as follows:

```
charge = 0
no_of_ones = 0
while (there are input_nrz_bits)
        if (input_nrz_bit == 1)
                if (no_of_ones == 0)
                        charge = charge - 1
                else
                        charge = charge + 1
                no_of_ones = ~no_of_ones
        else
                if (no_of_ones == 0)
                        charge = charge + 1
                else
                        charge = charge - 1
```

The encoding rule shall be:

If (no_of_ones == 0 AND charge < 0) OR (no_of_ones == 1 AND charge > 0) encode input with table 1 values. In all other cases, encode input with table 2 values.

The left most bit of the input and the encoder table entry correspond to the first bit to be recorded on tape.

Copyright International Organization for Standardization
Provided by IHS under license with ISO
No reproduction or networking permitted without license from IHS Not for Resale

Byte (dec)	Byte (hex)	Table 1 Pattern	Charge, Table 1	Table 2 Pattern	Charge, Table 2
0	(00)	1010111111	0	1010111111	0
1	(01)	1011010001	0	1011010001	0
2	(02)	1011010011	0	1011010011	0
3	(03)	1011010110	0	1011010110	0
4	(04)	1011100010	0	1011100010	0
5	(05)	1011100101	0	1011100101	0
6	(06)	1011100111	0	1011100111	0
7	(07)	1011101010	0	1011101010	0
8	(08)	1011101101	0	1011101101	0
9	(09)	1011101111	0	1011101111	0
10	(0A)	1011111001	0	1011111001	0
11	(0B)	1011111110	0	1011111110	0
12	(0C)	1100010001	0	1100010001	0
13	(0D)	1100010011	0	1100010011	0
14	(0E)	1100010110	0	1100010110	0
15	(0F)	1100100010	0	1100100010	0
16	(10)	1100100101	0	1100100101	0
17	(11)	1100100111	0	1100100111	0
18	(12)	1100101010	0	1100101010	0
19	(13)	1100101101	0	1100101101	0
20	(14)	1100101111	0	1100101111	0
21	(15)	1100111001	0	1100111001	0
22	(16)	1100111011	0	1100111011	0
23	(17)	1100111110	0	1100111110	0
24	(18)	1101001001	0	1101001001	0
25	(19)	1101001011	0	1101001011	0
26	(1A)	1101001110	0	1101001110	0
27	(1B)	1101010010	0	1101010010	0
28	(1C)	1101010101	0	1101010101	0
29	(1D)	1101010111	0	1101010111	0
30	(1E)	1101011010	0	1101011010	0
31	(1F)	1101011101	0	1101011101	0
32	(20)	1101011111	0	1101011111	0
33	(21)	1101101001	0	1101101001	0
34	(22)	1101101011	0	1101101011	0
35	(23)	1101101110	0	1101101110	0
36	(24)	1101110010	0	1101110010	0
37	(25)	1101110101	0	1101110101	0
38	(26)	1101110111	0	1101110111	0
39	(27)	1101111010	0	1101111010	0
40	(28)	1101111101	0	1101111101	0
41	(29)	1101111111	0	1101111111	0
42	(2A)	1110010001	0	1110010001	0
43	(2B)	1110010011	0	1110010011	0
44	(2C)	1110010110	0	1110010110	0

Copyright International Organization for Standardization
Provided by IHS under license with ISO
No reproduction or networking permitted without license from IHS
Not for Resale

45	(2D)	1110100010	0	1110100010	0
46	(2E)	1110100101	0	1110100101	0
47	(2F)	1110100111	0	1110100111	0
48	(30)	1110101010	0	1110101010	0
49	(31)	1110101101	0	1110101101	0
50	(32)	1110101111	0	1110101111	0
51	(33)	1110111001	0	1110111001	0
52	(34)	1110111011	0	1110111011	0
53	(35)	1110111110	0	1110111110	0
54	(36)	1111001001	0	1111001001	0
55	(37)	1111001011	0	1111001011	0
56	(38)	1111001110	0	1111001110	0
57	(39)	1111010010	0	1111010010	0
58	(3A)	1111010101	0	1111010101	0
59	(3B)	1111010111	0	1111010111	0
60	(3C)	1111011010	0	1111011010	0
61	(3D)	1111011101	0	1111011101	0
62	(3E)	1111011111	0	1111011111	0
63	(3F)	1111101001	0	1111101001	0
64	(40)	1111101011	0	1111101011	0
65	(41)	1111101110	0	1111101110	0
66	(42)	1111110010	0	1111110010	0
67	(43)	1111110101	0	1111110101	0
68	(44)	1111110111	0	1111110111	0
69	(45)	1111111010	0	1111111010	0
70	(46)	0110110010	2	1110011010	-2
71	(47)	1010011001	2	1110110010	-2
72	(48)	0010001001	0	0010001001	0
73	(49)	0010001011	0	0010001011	0
74	(4A)	0010001110	0	0010001110	0
75	(4B)	0010010010	0	0010010010	0
76	(4C)	0010010101	0	0010010101	0
77	(4D)	0010010111	0	0010010111	0
78	(4E)	0010011010	0	0010011010	0
79	(4F)	0010011101	0	0010011101	0
80	(50)	0010011111	0	0010011111	0
81	(51)	0010101001	0	0010101001	0
82	(52)	0010110010	0	0010110010	0
83	(53)	0011010001	0	0011010001	0
84	(54)	0011010011	0	0011010011	0
85	(55)	0011100010	0	0011100010	0
86	(56)	0011100101	0	0011100101	0
87	(57)	0011100111	0	0011100111	0
88	(58)	0011111001	0	0011111001	0
89	(59)	0100010001	0	0100010001	0
90	(5A)	0100010011	0	0100010011	0

Copyright International Organization for Standardization
Provided by IHS under license with ISO
No reproduction or networking permitted without license from IHS Not for Resale

91	(5B)	0100010110	0	0100010110	0
92	(5C)	0100100010	0	0100100010	0
93	(5D)	0100100101	0	0100100101	0
94	(5E)	0100100111	0	0100100111	0
95	(5F)	0100101010	0	0100101010	0
96	(60)	0100101101	0	0100101101	0
97	(61)	0100101111	0	0100101111	0
98	(62)	0100111001	0	0100111001	0
99	(63)	0100111011	0	0100111011	0
100	(64)	0100111110	0	0100111110	0
101	(65)	0101001001	0	0101001001	0
102	(66)	0101001011	0	0101001011	0
103	(67)	0101001110	0	0101001110	0
104	(68)	0101010010	0	0101010010	0
105	(69)	0101101001	0	0101101001	0
106	(6A)	0101110010	0	0101110010	0
107	(6B)	0110010001	0	0110010001	0
108	(6C)	0110010011	0	0110010011	0
109	(6D)	0110010110	0	0110010110	0
110	(6E)	0110100010	0	0110100010	0
111	(6F)	0110100101	0	0110100101	0
112	(70)	0110100111	0	0110100111	0
113	(71)	0110111001	0	0110111001	0
114	(72)	0111001001	0	0111001001	0
115	(73)	0111001011	0	0111001011	0
116	(74)	0111001110	0	0111001110	0
117	(75)	0111010010	0	0111010010	0
118	(76)	0111101001	0	0111101001	0
119	(77)	0111110010	0	0111110010	0
120	(78)	1000100011	0	1000100011	0
121	(79)	1000100110	0	1000100110	0
122	(7A)	1001000101	0	1001000101	0
123	(7B)	1001000111	0	1001000111	0
124	(7C)	1001001010	0	1001001010	0
125	(7D)	1001001101	0	1001001101	0
126	(7E)	1001001111	0	1001001111	0
127	(7F)	1001011001	0	1001011001	0
128	(80)	1001011011	0	1001011011	0
129	(81)	1001011110	0	1001011110	0
130	(82)	1001110001	0	1001110001	0
131	(83)	1001110011	0	1001110011	0
132	(84)	1001110110	0	1001110110	0
133	(85)	1010001001	0	1010001001	0
134	(86)	1010001011	0	1010001011	0
135	(87)	1010001110	0	1010001110	0
136	(88)	1010010010	0	1010010010	0

--`,,```,,,,````-`-`,,`,,`,`,,`---

Copyright International Organization for Standardization
Provided by IHS under license with ISO
No reproduction or networking permitted without license from IHS
Not for Resale

137	(89)	1010010101	0	1010010101	0
138	(8A)	1010010111	0	1010010111	0
139	(8B)	1010011010	0	1010011010	0
140	(8C)	1010011101	0	1010011101	0
141	(8D)	1010011111	0	1010011111	0
142	(8E)	1010101001	0	1010101001	0
143	(8F)	1010110010	0	1010110010	0
144	(90)	1101100101	2	1001001001	-2
145	(91)	1101100111	2	1001001011	-2
146	(92)	1101101010	2	1001001110	-2
147	(93)	1101101101	2	1001010010	-2
148	(94)	1101101111	2	1001010101	-2
149	(95)	1101111001	2	1001010111	-2
150	(96)	1101111011	2	1001011010	-2
151	(97)	1101111110	2	1001011101	-2
152	(98)	1110100011	2	1001011111	-2
153	(99)	1110100110	2	1001101001	-2
154	(9A)	1111000101	2	1001101011	-2
155	(9B)	1111000111	2	1001101110	-2
156	(9C)	1111001010	2	1001110010	-2
157	(9D)	1111001101	2	1001110101	-2
158	(9E)	1111001111	2	1001110111	-2
159	(9F)	1111011001	2	1001111010	-2
160	(A0)	1111011011	2	1001111101	-2
161	(A1)	1111011110	2	1001111111	-2
162	(A2)	1111110001	2	1010010011	-2
163	(A3)	1111110011	2	1010010110	-2
164	(A4)	1111110110	2	1010100101	-2
165	(A5)	0010010001	2	1010100111	-2
166	(A6)	0010010011	2	1010101010	-2
167	(A7)	0010010110	2	1010101111	-2
168	(A8)	0010100101	2	1010111001	-2
169	(A9)	0010100111	2	1010111110	-2
170	(AA)	0010101010	2	1011001001	-2
171	(AB)	0010101101	2	1011001011	-2
172	(AC)	0010101111	2	1011001110	-2
173	(AD)	0010111001	2	1011010010	-2
174	(AE)	0010111011	2	1011010111	-2
175	(AF)	0010111110	2	1011011010	-2
176	(B0)	0011001001	2	1011011101	-2
177	(B1)	0011001011	2	1011011111	-2
178	(B2)	0011001110	2	1011101001	-2
179	(B3)	0011010010	2	1011101011	-2
180	(B4)	0011010101	2	1011101110	-2
181	(B5)	0011010111	2	1011110010	-2
182	(B6)	0011011010	2	1011110101	-2

Copyright International Organization for Standardization
Provided by IHS under license with ISO
No reproduction or networking permitted without license from IHS
Not for Resale

183	(B7)	0011011101	2	1011110111	-2
184	(B8)	0011011111	2	1011111010	-2
185	(B9)	0011101001	2	1011111101	-2
186	(BA)	0011101011	2	1011111111	-2
187	(BB)	0011101110	2	1100100011	-2
188	(BC)	0011110010	2	1100100110	-2
189	(BD)	0011110101	2	1101001010	-2
190	(BE)	0011110111	2	1101001101	-2
191	(BF)	0011111010	2	1101001111	-2
192	(C0)	0011111101	2	1101011001	-2
193	(C1)	0011111111	2	1101011011	-2
194	(C2)	0100100011	2	1101011110	-2
195	(C3)	0100100110	2	1101110011	-2
196	(C4)	0101000101	2	1101110110	-2
197	(C5)	0101000111	2	1110010010	-2
198	(C6)	0101001010	2	1110010101	-2
199	(C7)	0101001101	2	1110010111	-2
200	(C8)	0101001111	2	1110011101	-2
201	(C9)	0101011001	2	1110011111	-2
202	(CA)	0101011011	2	1110101001	-2
203	(CB)	0101011110	2	1110101011	-2
204	(CC)	0101110001	2	1110101110	-2
205	(CD)	0101110011	2	1110110101	-2
206	(CE)	0101110110	2	1110110111	-2
207	(CF)	0110010010	2	1110111010	-2
208	(D0)	0110010101	2	1110111101	-2
209	(D1)	0110010111	2	1110111111	-2
210	(D2)	0110011101	2	1111010011	-2
211	(D3)	0110011111	2	1111010110	-2
212	(D4)	0110101001	2	1111100101	-2
213	(D5)	0110101011	2	1111100111	-2
214	(D6)	0110101110	2	1111101010	-2
215	(D7)	0110110101	2	1111101101	-2
216	(D8)	0110110111	2	1111101111	-2
217	(D9)	0110111010	2	1111111001	-2
218	(DA)	0110111101	2	1111111011	-2
219	(DB)	0110111111	2	0010001010	-2
220	(DC)	0111010001	2	0010001111	-2
221	(DD)	0111010011	2	0010011011	-2
222	(DE)	0111010110	2	0010011110	-2
223	(DF)	0111100010	2	0010110011	-2
224	(E0)	0111100101	2	0010110110	-2
225	(E1)	0111100111	2	0011100011	-2
226	(E2)	0111101010	2	0011100110	-2
227	(E3)	0111101101	2	0100101001	-2
228	(E4)	0111101111	2	0100101011	-2

Copyright International Organization for Standardization
Provided by IHS under license with ISO
No reproduction or networking permitted without license from IHS
Not for Resale

229	(E5)	0111111001	2	0100101110	-2
230	(E6)	0111111011	2	0100110101	-2
231	(E7)	0111111110	2	0100110111	-2
232	(E8)	1010001010	2	0100111010	-2
233	(E9)	1010001111	2	0100111101	-2
234	(EA)	1010011011	2	0100111111	-2
235	(EB)	1010011110	2	0101010011	-2
236	(EC)	1010110011	2	0101010110	-2
237	(ED)	1010110110	2	0101100101	-2
238	(EE)	1011100011	2	0101100111	-2
239	(EF)	1011100110	2	0101101010	-2
240	(F0)	1100010010	2	0101101101	-2
241	(F1)	1100010101	2	0101101111	-2
242	(F2)	1100010111	2	0101111001	-2
243	(F3)	1100011101	2	0101111011	-2
244	(F4)	1100011111	2	0101111110	-2
245	(F5)	1100101001	2	0110100011	-2
246	(F6)	1100101011	2	0110100110	-2
247	(F7)	1100101110	2	0111001010	-2
248	(F8)	1100110101	2	0111001101	-2
249	(F9)	1100110111	2	0111001111	-2
250	(FA)	1100111010	2	0111011001	-2
251	(FB)	1100111101	2	0111011011	-2
252	(FC)	1100111111	2	0111011110	-2
253	(FD)	1101010001	2	0111110011	-2
254	(FE)	1101010011	2	0111110110	-2
255	(FF)	1101010110	2	1000111011	-2

Copyright International Organization for Standardization
Provided by IHS under license with ISO
No reproduction or networking permitted without license from IHS
Not for Resale

Annex D

(normative)

Generation of Data Area CRC

The two CRC bytes shall be computed over the 1 038 bytes of the data area of the physical block and entered into the information matrix in column 51, rows 18 and 19. The two CRC bytes shall be generated as follows.

D_k is the byte in column c and row r where

k is in the range of 0 to 1037

c is in the range of 0 to 51

r is in the range of 0 to 19

$k = (10c + r)$, if c is even

$k = (10c + r + 510)$, if c is odd

$D_{k,0}$, $D_{k,1}$, ..., $D_{k,7}$, denote the 8 bits of D_k , where $D_{k,7}$ is the high order bit.

$$D_k(x) = \sum_{j=0}^{j=7} D_{k,j} x^j$$

$$D(x) = \sum_{k=0}^{k=1037} D_k(x) x^{8(1039-k)}$$

$G_{CRC}(x) = x^{16} + x^{12} + x^5 + 1$

$C(x) = D(x) \bmod G_{CRC}(x)$

$$C(x) + x^{15} + x^{13} + x^{11} + x^9 + x^6 + x^4 + x^2 + 1 = \sum_{k=0}^{k=7} CH_k x^{k+8} + CL_k x^k$$

Where CH_0, CH_1, ... , CH_7 are the bits of the first CRC byte (CRC1), CH_7 being the most significant bit.

CL_0, CL_1, ... , CL_7 are the bits of the second CRC byte (CRC2), CL_7 being the most significant bit.

Copyright International Organization for Standardization
Provided by IHS under license with ISO
No reproduction or networking permitted without license from IHS
Not for Resale

Annex E

(normative)

Generation of ECC

For the ECC, the (30,26,5) Reed-Solomon code shall be used for the horizontal code, and the (24,20,5) Reed-Solomon code shall be used for the vertical code.

This yields two types of check bytes:

– Horizontal Error Correction (EC) bytes

– Vertical EC bytes

Let the field generator for GF (2^8) be defined as

$G_\alpha(x) = x^8 + x^4 + x^3 + x^2 + 1$

The generator polynomial for Horizontal and Vertical EC bytes shall be

$$G(x) = \prod_{i=-1}^{i=2} (x + \alpha^i)$$

where α is the primitive root of GF (2^8).

Define a transform as follows:

T[A] denotes a transformation on the 8-bit byte A from the dual basis to the polynomial basis.

T^{-1}[B] denotes the inverse transform on the 8-bit byte B from the polynomial basis to the dual basis.

Let B = T[A] and A = T^{-1}[B]. The data in the G2 group is presumed to be in the dual basis. For the purpose of calculating EC bytes (horizontal and vertical) the data shall be transformed to the polynomial basis. The resulting EC bytes are then transformed into the dual basis.

The transforms shall be defined by the following.

A_0, A_1, ... , A_7 are the 8 bits of A (A_7 being the most significant bit) and B_0, B_1, ... , B_7 are the 8 bits of B (B_7 being the most significant bit.)

$B_0 = A_0 + A_2 + A_3 + A_5 + A_7$ $\quad$ $A_0 = B_5$

$B_1 = A_3 + A_4 + A_6 + A_7$ $\quad$ $A_1 = B_4$

$B_2 = A_0 + A_6 + A_7$ $\quad$ $A_2 = B_3 + B_7$

$B_3 = A_0 + A_1 + A_6$ $\quad$ $A_3 = B_2 + B_6 + B_7$

$B_4 = A_1$ $\quad$ $A_4 = B_1 + B_5 + B_6 + B_7$

$B_5 = A_0$ $\quad$ $A_5 = B_0 + B_4 + B_5 + B_6$

$B_6 = A_1 + A_2 + A_3 + A_7$ $\quad$ $A_6 = B_3 + B_4 + B_5$

$B_7 = A_0 + A_1 + A_2 + A_6$ $\quad$ $A_7 = B_2 + B_3 + B_4$

Horizontal EC Bytes

The Horizontal EC bytes shall be defined as follows:

$D_{c,r}$ denotes the bytes in the data portion of the matrix shown in figure 29 in 11.2.1 where *c* is the column number (0 to 51) and *r* is the row number (0 to 19).

Copyright International Organization for Standardization
Provided by IHS under license with ISO
No reproduction or networking permitted without license from IHS Not for Resale

$DHE_r(x)$ denotes the polynomial whose coefficients are the transforms (T) of the bytes in the even columns of row r. $TCRE_{k,r}$ denotes the transforms of the Horizontal EC bytes in the even numbered columns of row r. $CRE_{k,r}$ denotes the Horizontal EC bytes in the even numbered columns of row r.

$$DHE_r(x) = \sum_{k=0}^{k=25} T\left[D_{2k,r}\right] x^{29-k} \qquad r=0,1,\ldots,19$$

$$DHE_r(x) \bmod G(x) = \sum_{k=1}^{k=4} TCRE_{k,r} x^{4-k}$$

$CRE_{k,r} = T^{-1}[TCRE_{k,r}]$ $\quad k = 1,2,3,4$

$CRE_{k,r}$ is the contents of the cell in column c and row r where $c = 50 + 2k$.

$DHO_r(x)$ denotes the polynomial whose coefficients are the transforms (T) of the bytes in the odd columns of row r. $TCRO_{k,r}$ denotes the transforms of the Horizontal EC bytes in the odd numbered columns of row r. $CRO_{k,r}$ denotes the Horizontal EC bytes in the odd numbered columns of row r.

$$DHO_r(x) = \sum_{k=0}^{k=25} T\left[D_{2k+1,r}\right] x^{29-k} \qquad r=0,1,\ldots,19$$

$$DHO_r(x) \bmod G(x) = \sum_{k=1}^{k=4} TCRO_{k,r} x^{4-k}$$

$CRO_{k,r} = T^{-1}[TCRO_{k,r}]$ $\quad k = 1,2,3,4$

$CRO_{k,r}$ is the contents of the cell in column c and row r where $c = 51 + 2k$.

Vertical EC Bytes

The Vertical EC bytes shall be defined as follows:

$D_{c,r}$ denotes bytes in the data and Horizontal ECC portions of the matrix shown in figure 29 in 11.2.1 where c is the column number (0 to 59) and r is the row number (0 to 19).

$DV_c(x)$ denotes the polynomial whose coefficients are the transforms (T) of bytes in column c. $TCC_{c,k}$ denotes the inverse transforms of the Vertical EC bytes in column c. $CC_{c,k}$ denotes the Vertical EC bytes in column c.

$$DV_c(x) = \sum_{k=0}^{k=19} T\left[D_{c,k}\right] x^{23-k} \qquad c = 0,1,\ldots,59$$

$$DV_c(x) \bmod G(x) = \sum_{k=1}^{k=4} TCC_{c,k} x^{4-k}$$

$CC_{c,k} = T^{-1}[TCC_{c,k}]$ $\quad k = 1,2,3,4$

$CC_{c,k}$ is the contents of the cell in column c and row r where $r = 19 + k$.

Copyright International Organization for Standardization
Provided by IHS under license with ISO
No reproduction or networking permitted without license from IHS Not for Resale

Annex F

(normative)

Generation of Logical Block CRC

Two CRC bytes shall be calculated for the User Data of each Logical Record and sequentially entered into the cells following the last byte of the Logical Record. The two CRC bytes are computed as follows:

where:

D_k shall denote the *k*th byte of the Logical Record

$D_{k,j}$ shall denote the *j*th bit of the kth byte

n shall denote the number of User Data bytes in the Logical Record

then $D_k(x) = \sum_{j=0}^{j=7} D_{k,j} x^j$

$$D(x) = \sum_{k=0}^{k=n-1} D_k(x) x^{8(n+1-k)}$$

$G_{CRC}(x) = x^{16} + x^{12} + x^5 + 1$

$C(x) = D(x) \bmod G_{CRC}(x)$

$$C(x) + x^{14} + x^{12} + x^{10} + x^8 + x^7 + x^5 + x^3 + x = \sum_{j=0}^{j=7} (CH_j x^{j+8} + CL_j x^j)$$

where: CH_0, CH_1, ...,CH_7 are the bits of the first CRC byte (*CH*) and CH_7 is the most significant bit.

similarly: CL_0, CL_1, ...,CL_7 are the bits of the second CRC byte (*CL*) and CL_7 is the most significant bit.

--`,,```,,,,````-`-`,,`,,`,`,,`---
Copyright International Organization for Standardization
Provided by IHS under license with ISO
No reproduction or networking permitted without license from IHS
Not for Resale

Annex G

(normative)

Generation of Hamming Code ECC

Each search field byte shall be represented by an 8-bit data vector $\begin{bmatrix} a_7 & a_6 & a_5 & a_4 & a_3 & a_2 & a_1 & a_0 \end{bmatrix}$, where a_7 is the most significant bit and a_0 is the least significant bit of the byte. Each vector shall be transformed into a 12-bit Hamming encoded vector $\begin{bmatrix} h_{11} & h_{10} & h_9 & h_8 & h_7 & h_6 & h_5 & h_4 & h_3 & h_2 & h_1 & h_0 \end{bmatrix}$ by multiplying it by the following generator matrix:

$$G = \begin{bmatrix} 1 & 0 & 0 & 0 & 0 & 0 & 0 & 0 & 0 & 0 & 1 & 1 \\ 0 & 1 & 0 & 0 & 0 & 0 & 0 & 0 & 0 & 1 & 0 & 1 \\ 0 & 0 & 1 & 0 & 0 & 0 & 0 & 0 & 0 & 1 & 1 & 0 \\ 0 & 0 & 0 & 1 & 0 & 0 & 0 & 0 & 0 & 1 & 1 & 1 \\ 0 & 0 & 0 & 0 & 1 & 0 & 0 & 0 & 1 & 0 & 0 & 1 \\ 0 & 0 & 0 & 0 & 0 & 1 & 0 & 0 & 1 & 0 & 1 & 0 \\ 0 & 0 & 0 & 0 & 0 & 0 & 1 & 0 & 1 & 0 & 1 & 1 \\ 0 & 0 & 0 & 0 & 0 & 0 & 0 & 1 & 1 & 1 & 0 & 0 \end{bmatrix}$$

An additional bit of parity, p_0 shall be calculated as follows:

$$p_0 = \sim (h_{11} + h_{10} + h_9 + h_8 + h_7 + h_6 + h_5 + h_4 + h_3 + h_2 + h_1 + h_0)$$

and appended to the 12-bit Hamming encoded vector to generate a 13-bit encoded vector

$$\begin{bmatrix} h_{11} & h_{10} & h_9 & h_8 & h_7 & h_6 & h_5 & h_4 & h_3 & h_2 & h_1 & h_0 & p_0 \end{bmatrix}$$

This transformation from an 8-bit byte to a 13-bit encoded byte shall be performed on each of the 28 bytes of search field data and also on the 2 bytes of search field CRC.

Copyright International Organization for Standardization
Provided by IHS under license with ISO
No reproduction or networking permitted without license from IHS
Not for Resale

Annex H

(normative)

Generation of Search Field CRC

Two search field CRC bytes shall be computed over 28 bytes of the search field data. The bytes shall be computed as follows:

Let *k* be the subscript of the data bytes D_0 to D_{27}.

Then $D(x) = \sum_{j=0}^{j=27} D_k x^{28-j}$

The first CRC byte, *CRC Byte 1* shall be computed by

$$CRC\ Byte1 = D(x) \bmod (x + \alpha)$$

where α is the primitive element of the Galois field generated by $G(x) = x^8 + x^4 + x^3 + x^2 + 1$.

The second CRC byte, *CRC Byte 2* shall be computed by

$$CRC\ Byte2 = CRC\ Byte1 + \sum_{k=0}^{k=27} D_k$$

--`,,```,,,,````-`-`,,`,,`,`,,`---
Copyright International Organization for Standardization
Provided by IHS under license with ISO
No reproduction or networking permitted without license from IHS
Not for Resale

Annex J

(normative)

Randomization

The data from each information segment shall be submitted to an exclusive OR operation together with the bits which are the contents of the shift register shown in figure J.1. Before each information segment is processed, the shift register shall be set with the one's complement of the hexadecimal value of the segment number. Each bit of the information segment byte shall undergo the exclusive OR operation with a bit of the shift register shown, msb to lsb, as indicated. The shift register shall be clocked between subsequent bytes of the information segment.

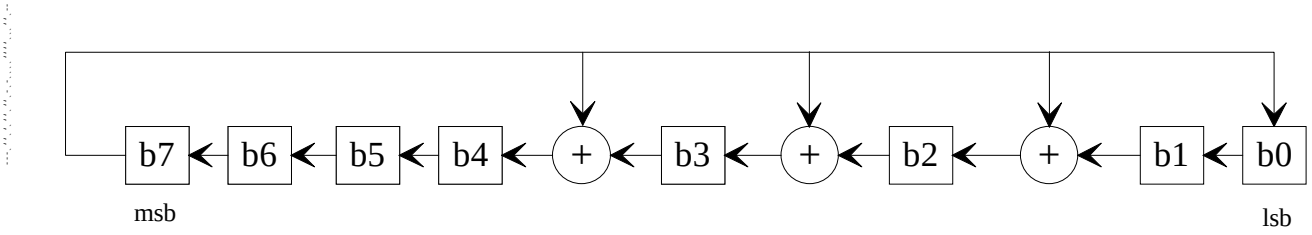

Figure J.1 - Randomization shift register

Copyright International Organization for Standardization
Provided by IHS under license with ISO
No reproduction or networking permitted without license from IHS
Not for Resale

Annex K

(informative)

Recommendations for Transportation

K.1 Environment

It is recommended that during transportation the cartridges are kept within the following conditions:

Temperature: - 40° C to 45° C

Relative humidity: 5 % to 80 %

Maximum wet bulb temperature: 26° C

There should be no condensation in or on the cartridge.

K.2 Hazards

Transportation of tape cartridges involves three basic potential hazards.

K.2.1 Impact loads and vibrations

The following recommendations should minimize damage to tape cartridges during transportation:

– Avoid mechanical loads that would distort the cartridge shape.

– Avoid dropping the cartridge more than 1 m.

– Cartridges should be fitted into a rigid box containing adequate shock-absorbent material.

– The final box should have a clean interior and a construction that provides sealing to prevent the ingress of dirt and water.

– The orientation of the cartridges inside the final box should be such that the axes of the tape reels are horizontal.

– The final box should be clearly marked to indicate its correct orientation.

K.2.2 Extremes of temperature and humidity

Extreme changes in temperature and humidity should be avoided whenever possible. Whenever a cartridge is received it should be conditioned in the operating environment for a period of at least 24 h.

K.2.3 Effects of stray magnetic fields

A nominal spacing of not less than 80 mm should exist between the cartridge and the outer surface of the shipping container to minimize the risk of corruption.

Copyright International Organization for Standardization
Provided by IHS under license with ISO
No reproduction or networking permitted without license from IHS Not for Resale

--`,,```,,,,````-`-`,,`,,`,`,,`---

Copyright International Organization for Standardization
Provided by IHS under license with ISO
No reproduction or networking permitted without license from IHS
Not for Resale

© ISO/IEC

ICS 35.220.20

Descriptors: data processing, information interchange, data recording, magnetic recording, helical scan recording, data recording devices, magnetic tapes, 8 mm magnetic tapes, magnetic tape cartridges, specifications, dimensions, physical properties, mechanical properties, magnetic properties, recording characteristics, recording tracks, track formats, interchangeability.

Price based on 74 pages

Copyright International Organization for Standardization
Provided by IHS under license with ISO
No reproduction or networking permitted without license from IHS

Not for Resale