INTERNATIONAL STANDARD

ISO/IEC 15718

First edition
1998-08-01

Information technology — Data interchange on 8 mm wide magnetic tape cartridge — Helical scan recording — HH-1 format

Technologies de l'information — Échange de données sur cartouche de bande magnétique de 8 mm *de large — Enregistrement par balayage en spirale — Format HH-1*

Reference number
ISO/IEC 15718:1998(E)

Copyright International Organization for Standardization
Provided by IHS under license with ISO
No reproduction or networking permitted without license from IHS

Not for Resale

Contents

Section 1 - General **1**

1 Scope **1**

2 Conformance **1**

2.1 Magnetic tape cartridge **1**
2.2 Generating drive **1**
2.3 Receiving drive **1**

3 Normative References **2**

4 Definitions **2**

4.1 Absolute Frame Address **2**
4.2 a.c. erase **2**
4.3 algorithm **2**
4.4 Area ID **2**
4.5 Average Signal Amplitude **2**
4.6 azimuth **2**
4.7 back surface **2**
4.8 bit cell **2**
4.9 byte **2**
4.10 cartridge **2**
4.11 Channel bit **2**
4.12 compressed data **2**
4.13 Cyclic Redundancy Check (CRC) character **2**
4.14 Data Format ID **2**
4.15 End of Data (EOD) **2**
4.16 Error Correcting Code **2**
4.17 flux transition position **2**
4.18 flux transition spacing **2**
4.19 Frame **2**
4.20 Logical Beginning of Tape (LBOT) **2**
4.21 record **2**
4.22 magnetic tape **2**
4.23 Master Standard Reference Tape **3**
4.24 Partition Boundary **3**

© ISO/IEC 1998

All rights reserved. Unless otherwise specified, no part of this publication may be reproduced or utilized in any form or by any means, electronic or mechanical, including photocopying and microfilm, without permission in writing from the publisher.

ISO/IEC Copyright Office • Case Postale 56 • CH-1211 Genève 20 • Switzerland

Printed in Switzerland

--`,,```,,,,````-`-`,,`,,`,`,,`---

Copyright International Organization for Standardization
Provided by IHS under license with ISO
No reproduction or networking permitted without license from IHS Not for Resale

4.25 Physical Beginning of Tape (PBOT) **3**
4.26 Physical End of Tape (PEOT) **3**
4.27 physical recording density **3**
4.28 Reference Field **3**
4.29 Secondary Standard Reference Tape **3**
4.30 Standard Reference Amplitude (SRA) **3**
4.31 Standard Reference Recording Current **3**
4.32 Tape Reference Edge **3**
4.33 Test Recording Current **3**
4.34 track **3**
4.35 Typical Field **3**
4.36 uncompressed data **3**

5 Conventions and notations **3**

5.1 Representation of numbers **3**
5.2 Names **4**

6 Acronyms **4**

7 Environment and safety **4**

7.1 Testing environment **4**
7.2 Operating environment **4**
7.3 Storage environment **4**
7.4 Transportation **4**
7.5 Safety **5**
7.6 Flammability **5**

Section 2 - Requirements for the case **6**

8 Dimensional and mechanical characteristics of the case **6**

8.1 General **6**
8.2 Overall dimension **6**
8.3 Holding areas **7**
8.4 Cartridge insertion **7**
8.5 Window **8**
8.6 Loading grips **8**
8.7 Label areas **8**
8.8 Datum areas and datum holes **8**
8.9 Support Areas **9**
8.10 Recognition holes **10**
8.11 Write-inhibit hole **10**
8.12 Pre-positioning surfaces **11**
8.13 Cartridge lid **11**
8.14 Cartridge reel lock **12**
8.15 Reel access holes **13**
8.16 Interface between the reels and the drive spindles **13**
8.17 Light path **15**
8.18 Position of the tape in the case **15**
8.19 Tape path zone **16**
8.20 Tape access cavity **16**
8.21 Tape access cavity clearance requirements **16**

Section 3 - Requirements for the Unrecorded Tape **33**

9 Mechanical, physical and dimensional characteristics of the tape **33**

9.1 Materials **33**

Copyright International Organization for Standardization
Provided by IHS under license with ISO
No reproduction or networking permitted without license from IHS Not for Resale

9.2 Tape length **33**

9.2.1 Magnetic tape **33**
9.2.2 Leader and trailer tapes **33**
9.2.3 Splicing tape **33**
9.3.1 Width of magnetic tape **33**
9.3.2 Width of leader and trailer tapes **33**
9.3.3 Width and position of splicing tape **33**

9.4 Discontinuities **33**
9.5 Thickness **33**

9.5.1 Thickness of the magnetic tape **33**
9.5.2 Thickness of leader and trailer tape **34**
9.5.3 Thickness of the splicing tape **34**

9.6 Longitudinal curvature **34**
9.7 Cupping **34**
9.8 Coating adhesion **34**
9.9 Layer-to-layer adhesion **35**
9.10 Tensile strength **35**

9.10.1 Breaking strength **35**
9.10.2 Yield strength **35**

9.11 Residual elongation **35**
9.12 Electrical resistance of coated surfaces **35**
9.13 Tape winding **36**
9.14 Light transmittance of tape **36**
9.15 Media Recognition System (MRS) **36**

10 Magnetic recording characteristics **37**

10.1 Typical Field **37**
10.2 Signal amplitude **38**
10.3 Resolution **38**
10.4 Overwrite **38**
10.5 Ease of erasure **38**
10.6 Tape quality **38**

10.6.1 Missing pulses **38**
10.6.2 Missing pulse zone **38**

10.7 Signal-to-Noise Ratio (SNR) **39**

Section 4 - Requirements for an interchanged tape **40**

11 Format **40**

11.1 General **40**
11.2 Information Matrix **41**

11.2.1 Loading the Information Matrix **41**

11.3 Sync Block **53**

11.3.1 Sync Block Data **53**
11.3.2 Sync Block Header **53**
11.3.3 Sync Block Header in Preamble Zone **54**

11.4 Data Zone **54**

11.4.1 Identification and arrangement of Information Blocks in the Data Zone of a Frame **54**
11.4.2 Identification and arrangement of Sync Blocks in Data Zone of a Track **55**

Copyright International Organization for Standardization
Provided by IHS under license with ISO
No reproduction or networking permitted without license from IHS Not for Resale

12 Method of recording 55

12.1 Physical recording density 55
12.2 Long-term average bit cell length 55
12.3 Short-term average bit cell length 55
12.4 Rate of change 56
12.5 Bit shift 56
12.6 Read signal amplitude 56
12.7 Recording current 56

13 Track geometry 56

13.1 Track configuration 56
13.2 Average track pitch 57
13.3 Variations of the track pitch 57
13.4 Track width 57
13.5 Track angle 57
13.6 Track edge linearity 57
13.7 Track length 57
13.8 Data Zone reference 57
13.9 Azimuth angles 57

14 Recording pattern 57

14.1 Recorded Sync Block 57
14.2 Preamble Zone 57
14.3 Postamble Zone 57

15 Format of a track 58

15.1 Track capacity 58
15.2 Positioning accuracy 58
15.3 Tracking scheme 58

16 Layout of a Single Data Space tape 58

16.1 Frame type 58

16.1.1 Data Frame 58
16.1.2 Gap Frame 58
16.1.3 Long File Mark Frame 58
16.1.4 Short File Mark Frame 58
16.1.5 Set Mark Frame 58
16.1.6 End of Data Frame 58
16.1.7 Format Frame 59
16.1.8 Data Frame in System Area 59

16.2 Device Area 59
16.3 Reference Area 59
16.4 System Area 59

16.4.1 Guard Band No.1 59
16.4.2 System Log Preamble 59
16.4.3 System Log 59
16.4.4 System Log Postamble 59
16.4.5 Guard Band No.2 59
16.4.6 Data Area Preamble 59

16.5 Data Area 59

16.5.1 Long File Mark 59
16.5.2 Short File Mark 59
16.5.3 Set Mark 60

Copyright International Organization for Standardization
Provided by IHS under license with ISO
No reproduction or networking permitted without license from IHS Not for Resale

16.5.4 Write operation **60**
16.5.5 Append and overwrite operations **60**
16.5.6 Rewritten Frames **60**

16.6 EOD Area **60**
16.7 Post-EOD Area **60**

17 Layout of a partitioned tape **61**

17.1 Overall magnetic tape layout **61**

17.1.1 Device Area **61**
17.1.2 Partition 1 **61**
17.1.3 Partition 0 **62**

17.2 Partition Identification **62**

Annexes

A - Measurement of light transmittance of tape and leaders **63**

B - Measurement of Signal-to-Noise Ratio **66**

C - Representation of 8-bit bytes by 10-bit patterns **67**

D - Measurement of bit shift **75**

E - Measurement of track edge linearity tolerance **78**

F - Recommendations for transportation **79**

G - Example of the content of a Data Block in the System Area **80**

--`,,```,,,,````-`-`,,`,,`,`,,`---
Copyright International Organization for Standardization
Provided by IHS under license with ISO
No reproduction or networking permitted without license from IHS Not for Resale

Foreword

ISO (the International Organization for Standardization) and IEC (the International Electrotechnical Commission) form the specialized system for worldwide standardization. National bodies that are members of ISO or IEC participate in the development of International Standards through technical committees established by the respective organization to deal with particular fields of technical activity. ISO and IEC technical committees collaborate in fields of mutual interest. Other international organizations, governmental and non-governmental, in liaison with ISO and IEC, also take part in the work.

In the field of information technology, ISO and IEC have established a joint technical committee, ISO/IEC JTC 1. Draft International Standards adopted by the joint technical committee are circulated to national bodies for voting. Publication as an International Standard requires approval by at least 75 % of the national bodies casting a vote.

International Standard ISO/IEC 15718 was prepared by JISC (as Standard JIS X.6143-1997) with document support and contribution from ECMA (ECMA-247) and was adopted, under a special “fast-track procedure”, by Joint Technical Committee ISO/IEC JTC 1, *Information technology*, in parallel with its approval by national bodies of ISO and IEC.

Annexes A to E form an integral part of this International Standard. Annexes F and G are for information only.

--`,,```,,,,````-`-`,,`,,`,`,,`---

Copyright International Organization for Standardization
Provided by IHS under license with ISO
No reproduction or networking permitted without license from IHS
Not for Resale

Copyright International Organization for Standardization
Provided by IHS under license with ISO
No reproduction or networking permitted without license from IHS
Not for Resale

Information technology — Data interchange on 8 mm wide magnetic tape cartridge — Helical scan recording — HH-1 format

Section 1 - General

1 Scope

This International Standard specifies the physical and magnetic characteristics of an 8 mm wide magnetic tape cartridge so as to provide physical interchange of such cartridges between drives. It also specifies the quality of the recorded signals, the recording method and the recorded format - called HH-1 format - thereby allowing for full data interchange between drives by means of such magnetic tape cartridges.

Information interchange between systems also requires, as a minimum, agreement between the interchange parties upon the interchange code(s) and the specifications of the structure and labelling of the information on the interchanged cartridge.

2 Conformance

2.1 Magnetic tape cartridge

A tape cartridge shall be in conformance with this International Standard if it meets all the mandatory requirements specified herein. The tape requirements shall be satisfied throughout the extent of the tape.

2.2 Generating drive

A drive generating a magnetic tape cartridge for interchange shall be in conformance with this International Standard if all recordings on the tape meet the mandatory requirements of this International Standard.

A claim of conformance shall state which of the following optional features are implemented and which are not

- the performing of a Read-After-Write check and the recording of any necessary rewritten frames;
- the generation of ECC3 Blocks.

In addition a claim of conformance shall state

- whether or not, registered data compression algorithm(s) are implemented within the system and are able to compress data received from the host, and
- the registered identification number(s) of the implemented algorithm(s).

2.3 Receiving drive

A drive receiving a magnetic tape cartridge for interchange shall be in conformance with this International Standard if it is able to handle any recording made on the tape according to this International Standard. In particular it shall

- be able to recognize rewritten frames and to make available to the host, data and File Marks from only one of these frames;
- be able to recognize a ECC3 Block, and ignore it if the system is not capable of using ECC3 check bytes in a process of error correction;
- be able to recognize compressed data, identify the algorithm used, and make the algorithm registration number available to the host;
- be able to make compressed data available to the host.

In addition a claim of conformance shall state

- whether or not the system is capable of using ECC3 check bytes in a process of error correction;
- whether or not one or more decompression algorithm(s) are implemented within the system, and are able to be applied to compressed data prior to making such data available to the host;
- the registered identification number(s) of the data compression algorithm(s) for which a complementary data decompression algorithm is implemented.
- whether or not the system is capable of updating the System Log(s) if the Write-inhibit Hole state so permits.

--`,,```,,,,````-`-`,,`,,`,`,,`---

Copyright International Organization for Standardization
Provided by IHS under license with ISO
No reproduction or networking permitted without license from IHS
Not for Resale

3 Normative references

The following standards contain provisions which, through reference in this text, constitute provisions of this International Standard. At the time of publication, the editions indicated were valid. All standards are subject to revision, and parties to agreements based on this International Standard are encouraged to investigate the possibility of applying the most recent editions of the standards indicated below. Members of IEC and ISO maintain registers of currently valid International Standards.

ISO 527-1:1993, *Plastics — Determination of tensile properties — Part 1: General principles.*

ISO 1302:1992, *Technical drawings — Method of indicating surface texture.*

ISO/IEC 11576:1995, *Information technology — Procedure for the registration of algorithms for the lossless compression of data.*

IEC 950:1991, *Safety of information technology equipment.*

4 Definitions

For the purposes of this International Standard, the following definitions apply.

4.1 Absolute Frame Address: A sequence number, encoded in the Frame.

4.2 a.c. erase: A process of erasure utilising alternating magnetic fields of decaying intensity.

4.3 algorithm: A set of rules for transforming the logical representation of data.

4.4 Area ID: Identifier of an area of the tape.

4.5 Average Signal Amplitude: The average peak-to-peak value of the output signal from the read head at the specified physical recording density over a minimum of 20,7 mm of track, exclusive of missing pulses.

4.6 azimuth: The angular deviation, in degrees of arc, made by the mean flux transition line with a line normal to the centreline of the recorded track.

4.7 back surface: The surface of the tape opposite to the magnetic coating which is used to record data.

4.8 bit cell: A distance along the track allocated for the recording of a Channel bit.

4.9 byte: An ordered set of bits acted upon as a unit.

4.10 cartridge: A case containing magnetic tape stored on twin hubs.

4.11 Channel bit: A bit after 8-10 transformation.

4.12 compressed data: Data which has been subjected to a compression algorithm.

4.13 Cyclic Redundancy Check (CRC) character: A 16-bit character obtained from a mathematical calculation and used for error detection.

4.14 Data Format ID: An identifier specifying which data format is being used on the tape.

4.15 End of Data (EOD): The point on the tape at the end of the Frame which contains the last user data.

4.16 Error Correcting Code: A mathematical computation yielding check bytes used for the detection and correction of errors.

4.17 flux transition position: That point on a magnetic tape which exhibits the maximum free-space flux density normal to the magnetic tape surface.

4.18 flux transition spacing: The distance along a track between successive flux transitions.

4.19 Frame: A pair of adjacent tracks with azimuths of opposite polarity, in which the track with the positive azimuth precedes that with the negative azimuth.

4.20 Logical Beginning of Tape (LBOT): The point along the length of the tape where a recording of data for interchange commences.

4.21 Logical Record: Related data, from the host, treated as a unit of information.

4.22 magnetic tape: A tape which will accept and retain the magnetic signals intended for input, output and storage purposes on computers and associated equipment.

--`,,```,,,,````-`-`,,`,,`,`,,`---

Copyright International Organization for Standardization
Provided by IHS under license with ISO
No reproduction or networking permitted without license from IHS Not for Resale

4.23 Master Standard Reference Tape: A tape selected as the standard for a Reference Field, Signal Amplitude, Resolution, Overwrite and Signal-to-Noise Ratio.

Note - The Master Standard Reference Tape has been established by the Reliability Center for Electronic Components of Japan (RCJ).

4.24 Partition Boundary: The point along the length of a magnetic tape at which partition 1 ends and partition 0 commences.

4.25 Physical Beginning of Tape (PBOT): The point where the leader tape is joined to the magnetic tape.

4.26 Physical End of Tape (PEOT): The point where the trailer tape is joined to the magnetic tape.

4.27 physical recording density: The number of recorded flux transitions per unit length of track, expressed in flux transitions per millimetre (ftpmm).

4.28 Reference Field: The Typical Field of the Master Standard Reference Tape.

4.29 Secondary Standard Reference Tape (SSRT): A tape the performance of which is known and stated in relation to that of the Master Standard Reference Tape.

Note - Secondary Standard Reference Tapes can be ordered from RCJ, 1-1-12 Hachiman-cho, Higashikurume, Tokyo 203, Japan, under Part Number JRM 6143 until the year 2006. In principle such tapes will be available for a period of 10 years from the first version of this Standard. However, by agreement between ECMA and RCJ, this period may be shortened or extended to take account of demand for such SSRTs.

It is intended that these be used for calibrating tertiary reference tapes for use in routine calibration.

4.30 Standard Reference Amplitude (SRA): The Average Signal Amplitude derived from the Master Standard Reference Tape when using the Test Recording Current and the recording density of 3 658,1 ftpmm.

Traceability to the SRA is provided by the calibration factors supplied with each Secondary Standard Reference Tape.

4.31 Standard Reference Current: The current that produces the Reference Field.

4.32 Tape Reference Edge: The lower edge of the tape when viewing the recording surface of the tape, with the BOT splice to the observer's left.

4.33 Test Recording Current: The current that is used to record an SRA. It is 1,3 times the Standard Reference Current.

4.34 track: A diagonally positioned area on the tape along which a series of magnetic signals may be recorded.

4.35 Typical Field: In the plot of Average Signal Amplitude against the recording field at the physical recording density of 3 658,1 ftpmm, the minimum field that causes the Average Signal Amplitude equal to 90% of the maximum Average Signal Amplitude.

4.36 uncompressed data: Data which has not been subjected to a compression algorithm.

5 Conventions and notations

5.1 Representation of numbers

- A measured value is rounded off to the least significant digit of the corresponding specified value. It implies that a specified value of 1,26 with a positive tolerance of 0,01, and a negative tolerance of 0,02 allows a range of measured values from 1,235 to 1,275.
- Letters and digits in parentheses represent numbers in hexadecimal notation.
- The setting of a bit is denoted by ZERO or ONE.
- Numbers in binary notation and bit combinations are represented by strings of 0 and 1. Within such strings, X may be used to indicate that the setting of a bit is not specified within the string.
- Numbers in binary notation and bit combinations are shown with the most significant byte to the left and with the most significant bit in each byte to the left.
- Negative values of numbers in binary notation are given in TWO' s complement.
- In each field the data is processed so that the most significant byte (byte 0) is processed first. Within each byte the most significant bit (numbered 7 in an 8-bit byte) is processed first. This order of processing applies also to the data input to the Error Detection and Correction circuits and to their outputs, unless otherwise stated.

Copyright International Organization for Standardization
Provided by IHS under license with ISO
No reproduction or networking permitted without license from IHS Not for Resale

5.2 Names

The names of basic elements, e.g. specific fields, are given with a capital initial letter.

6 Acronyms

BOT Beginning of Tape
CRC Cyclic Redundancy Check
ECC Error Correcting Code
EOD End of Data
LBOP Logical Beginning of Partition
LBOT Logical Beginning of Tape
LEOP Logical End of Partition
LEOT Logical End of Tape
PBOP Physical Beginning of Partition
PEOP Physical End of Partition
PBOT Physical Beginning of Tape
PEOT Physical End of Tape
SNR Signal-to-Noise-Ratio
SSRT Secondary Standard Reference Tape

7 Environment and safety

The conditions specified below refer to ambient conditions immediately surrounding the cartridge. Cartridges exposed to environments outside these limits may still be able to function usefully; however, such exposure may cause permanent damage.

7.1 Testing environment

Unless otherwise specified, tests and measurements made on the cartridge to check the requirements of this International Standard shall be carried out under the following conditions:

temperature:	23 ^{o}C ± 2 ^{o}C
relative humidity:	40 % to 60 %
conditioning period before testing:	24 h

7.2 Operating environment

Cartridges used for data interchange shall be capable of operating under the following conditions:

temperature:	5 ^{o}C to 45 ^{o}C
relative humidity:	20 % to 80 %
wet bulb temperature:	26 ^{o}C max.

There shall be no deposit of moisture on or in the cartridge.

Conditioning before operating:

If a cartridge has been exposed during storage and/or transportation to a condition outside the above values, before use the cartridge shall be conditioned in the operating environment for a time at least equal to the period during which it has been out of the operating environment, up to a maximum of 24 h.

Note - Rapid variations of temperature should be avoided.

7.3 Storage environment

The following conditions shall be observed during storage of cartridges :

temperature:	5 ^{o}C to 32 ^{o}C
relative humidity:	20 % to 60 %

The stray magnetic field at any point on the tape shall not exceed 4000 A/m. There shall be no deposit of moisture on or in the cartridge.

7.4 Transportation

Recommended limits for the environment to which a cartridge may be subjected during transportation, and the precautions to be taken to minimize the possibility of damage, are provided in annex F.

Copyright International Organization for Standardization
Provided by IHS under license with ISO
No reproduction or networking permitted without license from IHS Not for Resale

7.5 Safety

The cartridge and its components shall satisfy the requirements of IEC 950 when used in the intended manner or in any foreseeable use in an information processing system.

7.6 Flammability

The cartridge and its components shall be made from materials which, if ignited from a match flame, do not continue to burn in a still carbon dioxide atmosphere.

--`,,```,,,,````-`-`,,`,,`,`,,`---
Copyright International Organization for Standardization
Provided by IHS under license with ISO
No reproduction or networking permitted without license from IHS
Not for Resale

Section 2 - Requirements for the case

8 Dimensional and mechanical characteristics of the case

8.1 General

The cartridge shall consist of the following elements:

- a case
- recognition holes
- a write inhibit mechanism
- twin reels containing magnetic tape
- a locking mechanism for the reels

Dimensional characteristics are specified for those parameters deemed to be mandatory for interchange and compatible use of the cartridge. Where there is freedom, of design, only the functional characteristics of the elements described are indicated. In the figures a typical implementation is represented in third angle projections.

Figure 1 is a perspective view of the cartridge seen from the top.
Figure 2 is a perspective view of the cartridge seen from the bottom.
Figure 3 is a perspective view of Reference Planes X, Y and Z.
Figure 4 shows the front side with the lid closed.
Figure 5 shows the left side with the lid closed.
Figure 6 shows the top side with the lid closed.
Figure 7 shows the right side with the lid closed.
Figure 8 shows the rear side with the lid closed.
Figure 9 shows the bottom side, datum and support areas.
Figure 10 shows the bottom side with the lid removed.
Figure 11 is the enlarged view of the datum and recognition holes.
Figure 12 are the cross-sections through the light path holes, the recognition holes and the write-inhibit hole.
Figure 13 shows details of the lid when closed, rotating and open.
Figure 14 shows the details of the lid release insertion channel.
Figure 15 shows the lid lock release requirements.
Figure 16 shows the reel lock release requirements.
Figure 17 shows the reel unlock force direction.
Figure 18 shows the lid release force direction.
Figure 19 shows the lid opening force direction.
Figure 20 shows the light path and light window.
Figure 21 shows the internal tape path and light path.
Figure 22 shows the cartridge reel and a cross-section view of the cartridge reel.
Figure 23 is a cross-section view of the cartridge reel interface with the drive spindle.
Figure 24 shows the tape access cavity clearance requirements.

The dimension are referred to three orthogonal Reference Planes X, Y and Z (see figure 3).

Plane X is perpendicular to Plane Z and passes through the centres of the Datum Holes A and B.

Plane Y is perpendicular to Plane X and Plane Z and passes through the centre of Datum Hole A.

Datum area A, B and C shall lie in Plane Z.

8.2 Overall dimension (figures 5 and 6)

The length of the case shall be

$l_1 = 62{,}5 \text{ mm} \pm 0{,}3 \text{ mm}$

The width of the case shall be

$l_2 = 95{,}0 \text{ mm} \pm 0{,}2 \text{ mm}$

The distance from the top of the case to Plane Z shall be

$l_3 = 15{,}0 \text{ mm} \pm 0{,}2 \text{ mm}$

The distance from the rear side to Plane X shall be

Copyright International Organization for Standardization
Provided by IHS under license with ISO
No reproduction or networking permitted without license from IHS Not for Resale

l_4 = 47,35 mm ± 0,15 mm

The distance from the right side to Plane Y shall be

l_5 = 13,0 mm ± 0,1 mm

8.3 Holding areas

The holding areas shown hatched in figure 6 shall be the areas along which the cartridge shall be held down when inserted into the drive. The distance of the holding areas from Plane X shall be

l_6 = 12,0 mm max.

The width when measured from the edge of the case shall be

l_7 = 3,0 mm min.

8.4 Cartridge insertion

The cartridge shall have asymmetrical features to prevent insertion into the drive in other than the correct orientation. These consist of an insertion channel, a recess and an incline.

The insertion channel (figures 4 and 14) shall provide for an unobstructed path, when the lid is closed and locked, to unlock the lid. The distance of the insertion channel from Plane Y shall be

l_8 = 79,7 mm ± 0,2 mm

There shall be a chamfer at the beginning of the insertion channel defined by

l_9 = 1,0 mm ± 0,1 mm

l_{16} = 1,5 mm ± 0,1 mm

An additional chamfer further into the insertion channel shall be defined by

l_{10} = 0,7 mm ± 0,1 mm

l_{17} = 1,0 mm ± 0,1 mm

l_{18} = 3,8 mm ± 0,1 mm

The innermost width of the channel shall be

l_{11} = 1,0 mm min.

The thickness of the lid shall be

l_{12} = 1,2 mm ± 0,1 mm

There shall be a chamfer on the lid defined by

l_{13} = 0,8 mm ± 0,1 mm

l_{14} = 1,2 mm ± 0,1 mm

The lid shall extend from the case a distance of

l_{15} = 0,5 mm ± 0,1 mm

The distance from the left side of the case to the lid lock shall be

l_{19} = 0,2 mm ± 0,2 mm

The height of the insertion area shall be

l_{20} = 2,3 mm min.

l_{21} = 2,5 $^{+\ 0,2\ \text{mm}}_{-\ 0,0\ \text{mm}}$

The recess is located on the right side of the cartridge. The position and dimensions (figures 5, 7 and 10) shall be defined by

l_{22} = 7,5 mm max.

Copyright International Organization for Standardization
Provided by IHS under license with ISO
No reproduction or networking permitted without license from IHS Not for Resale

l_{23} = 11,0 mm ± 0,2 mm

l_{24} = 1,5 mm ± 0,1 mm

The depth of the recess shall be

l_{25} = 1,5 mm ± 0,1 mm

The incline (figure 13a) is part of the lid structure. The distance of the incline from Plane X shall be defined by

l_{26} = 7,7 mm $^{+\ 0,0\ mm}_{-\ 2,5\ mm}$

The angle of the incline shall be

$a_1 = 20^o \pm 1^o$

The incline shall end when it intersects the radius r_3 (see clause 8.13).

8.5 Window (figure 1)

A window may be provided on the top side so that parts of the reels are visible. The window, if provided, shall not extend beyond the height of the cartridge.

8.6 Loading grips (figures 5 and 7)

The cartridge shall have recessed loading grips on each side to aid an automatic loading mechanism.

The distance from Plane X to the centreline of the loading grip shall be

l_{28} = 39,35 mm ± 0,20 mm;

The distance from Plane Z on the bottom side and from the top side shall be

l_{29} = 1,5 mm ± 0,1 mm;

The width of the indent shall be

l_{30} = 5,0 mm ± 0,3 mm;

The depth of the indent shall be

l_{31} = 2,0 mm ± 0,2 mm;

and the angle of the indent

$a_2 = 90^o \pm 5^o$.

8.7 Label areas (figures 6 and 8)

A portion of the rear side of the cartridge and a portion of the top side of the cartridge may be used for labels. The position and the size of the labels shall not interfere with the operation or clearance requirements of the cartridge component parts.

The area used for labels on the top side shall not extend beyond the inner edge of the holding areas defined by l_6 and l_7.

The position and dimensions of the label area on the rear side shall be defined by

l_{32} = 0,5 mm min.

l_{33} = 1,5 mm min.

l_{34} = 80,0 mm max.

The depth of the label area s shall be 0,3 mm max.

8.8 Datum areas and datum holes

The annular datum areas A, B and C shall lie in Plane Z (see figures 9, 10 and 11). They determine the vertical position of the cartridge in the drive. Each shall have a diameter d_1 equal to 6,0 mm ± 0,1 mm and be concentric with the respective datum hole.

The centres of datum holes A and B lie in Plane X.

The centre of the circular datum hole A shall be at the intersection of planes X and Y (see figure 10).

Copyright International Organization for Standardization
Provided by IHS under license with ISO
No reproduction or networking permitted without license from IHS Not for Resale

The distance from the centre of datum hole B to Plane Y (see figure 9) shall be

l_{35} = 68,0 mm ± 0,1 mm

The distance from the centre of the circular datum hole C to Plane Y (see figure 11) shall be

l_{36} = 10,20 mm ± 0,05 mm

The distance from the centre of datum hole D to Plane Y (see figure 11) shall be

l_{37} = 79,2 mm ± 0,2 mm

The distance from the centres of datum holes C and D to Plane X (see figure 10) shall be

l_{38} = 36,35 mm ± 0,08 mm

The thickness of the case in the datum areas shall be

l_{39} = 1,2 mm ± 0,1 mm

The diameter at the bottom of datum hole A and datum hole C shall be

l_{40} = 2,6 mm min.

The depth of the holes shall be

l_{42} = 4,0 mm min.

The upper diameter of datum holes A and C shall be

l_{44} = 3,00 $^{+\ 0,05\ mm}_{-\ 0,00\ mm}$

This diameter shall be to a depth of

l_{41} = 1,5 mm min.

There shall be a chamfer around the outside of datum hole A and datum hole C defined by

l_{43} = 0,3 mm max.

$a_3 = 45^o \pm 1^o$

The width at the bottom of datum holes B and D shall be l_{40}.

The depth of the holes shall be l_{42}.

The dimensions at the top of the holes shall be

l_{45} = 3,5 mm ± 0,1 mm

l_{46} = 3,00 $^{+\ 0,05\ mm}_{-\ 0,00\ mm}$

r_1 = 1,75 mm ± 0,05 mm

This width shall be to a depth l_{41}.

There shall be a chamfer around the outside of datum holes B and D defined by l_{43} and a_3.

8.9 Support areas (figure 9)

The cartridge Support areas are shown shaded in figure 9. Support areas A', B' and C' shall be coplanar with Datum areas A, B and C, respectively, within 0,1 mm. Support area D' shall be coplanar with Plane Z within 0,15 mm.

The areas within l_{49} of the edge of the cartridge shall be recessed from the Support Areas.

l_{49} = 0,5 mm ± 0,1 mm

Support areas A' and B' shall extend from Plane X towards the front of the case a distance

l_{47} = 10,0 mm ± 0,1 mm

Copyright International Organization for Standardization
Provided by IHS under license with ISO
No reproduction or networking permitted without license from IHS Not for Resale

Support areas A' and B' shall extend from the centre of the Datum holes toward the outside of the case a distance l_{47}.

Support areas A' and B' shall extend from the centre of the Datum holes toward the inside of the case a distance of

l_{48} = 11,0 mm ± 0,1 mm

Support areas A' and B' shall extend from Plane X toward the rear of the case a distance of

l_{50} = 7,0 mm ± 0,1 mm

The distance of Support areas C' and D' from Plane X shall be

l_{51} = 30,0 mm ± 0,1 mm

The dimensions of Support areas C' and D' shall be defined by l_{47} and

l_{52} = 5,5 mm ± 0,1 mm

l_{53} = 64,5 mm ± 0,2 mm

8.10 Recognition holes (figures 10, 11 and 12)

There shall be 5 recognition holes numbered 1 to 5 as shown in figure 11.

The centre of recognition hole 1 shall be defined by

l_{54} = 43,35 mm ± 0,15 mm

l_{57} = 6,4 mm ± 0,1 mm

The centre of recognition hole 2 shall be defined by l_{54} and l_{57}.

The centre of recognition hole 3 shall be defined by l_{54} and

l_{58} = 79,0 mm ± 0,2 mm

The centre of recognition hole 4 shall be defined by

l_{55} = 3,7 mm ± 0,1 mm

l_{56} = 2,3 mm ± 0,1 mm

The centre of recognition hole 5 shall be defined by l_{55} and l_{56}.

All recognition holes shall have the cross-section E-E and F-F shown in figure 12 and shall have a diameter of 3,0 mm ± 0,1 mm.

The depth of a closed recognition hole below Plane Z shall be

$l_{59} = 1{,}2 \text{ mm}^{+0{,}3 \text{ mm}}_{-0{,}1 \text{ mm}}$

The depth of an open recognition hole below Plane Z shall be

l_{60} = 5,0 mm min.

One of the cross-sections shows a recognition hole closed by a plug. The other shows one hole with the plug punched out and the other hole closed by a plug. These plugs shall withstand an applied force of 0,5 N max. without being punched out.

This International Standard prescribes the following states of these holes.

- Recognition hole 1 shall be closed.
- Recognition hole 2 shall be open
- Recognition hole 3 shall be open
- Recognition hole 4 shall be closed.
- Recognition hole 5 shall be open.

8.11 Write-inhibit hole (figures 11 and 12)

The centre of the Write-inhibit hole shall be defined by l_{54} and

l_{61} = 10,0 mm ± 0,1 mm

--`,,```,,,,````-`-`,,`,,`,`,,`---
Copyright International Organization for Standardization
Provided by IHS under license with ISO
No reproduction or networking permitted without license from IHS
Not for Resale

The diameter of the hole shall be 3,0 mm ± 0,1 mm.

The depth of a closed Write-inhibit hole below Plane Z shall be l_{59}.

The depth of an open Write-inhibit hole below Plane Z shall l_{60}

When the Write-inhibit hole is open, recording on the tape is inhibited. When it is closed, recording is enabled.

The case may have a movable element allowing the write-inhibit hole to be opened or closed. If present, this element shall be such that the state of the write-inhibit hole shall be visible (see figure 8 as an example). The write-inhibit hole closure shall be constructed to withstand a force of 0,5 N. The force required to open or close the write-inhibit hole shall be between 1 N and 15 N.

8.12 Pre-positioning surfaces (figures 4 and 10)

These surfaces determine the position of the cartridge when it is inserted into the drive loading slot.

The distance from Plane Z to the surface on which the tape reference edge rests (figure 4) shall be

$$l_{62} = 2{,}4 \text{ mm} \begin{matrix} +\ 0{,}0 \text{ mm} \\ -\ 0{,}1 \text{ mm} \end{matrix}$$

Positioning of the cartridge relative to Plane Y shall be controlled by the surfaces defined by

l_{63} = 1,0 mm ± 0,1 mm

l_{64} = 69,0 mm ± 0,2 mm

Positioning of the cartridge relative to Plane X shall be controlled by the surfaces defined by

l_{65} = 14,65 mm ± 0,10 mm

The position and angle of the chamfer at the edge of this surface shall be defined by

l_{66} = 13,15 mm ± 0,10 mm

$a_4 = 45^{o} \pm 1^{o}$

8.13 Cartridge lid (figures 6 and 13)

The cartridge shall have a lid for protection of the tape during handling, storage and transportation. The lid consists of two parts, the main part and an auxiliary part.

The main part rotates around axis A (see figure 13) the position of which is fixed relative to the case.

The location of axis A shall be defined by

$$l_{27} = 0{,}55 \text{ mm} \begin{matrix} +\ 0{,}05 \text{ mm} \\ -\ 0{,}10 \text{ mm} \end{matrix}$$

l_{67} = 7,5 mm ± 0,1 mm

The auxiliary part rotates around axis B the position of which is fixed relative to the main part of the lid and moves with it. When the lid is in the closed position, the location of axis B shall be defined by

l_{68} = 7,0 mm ± 0,1 mm

l_{69} = 10,1 mm ± 0,1 mm

The rotation of the auxiliary part is controlled by a cam at each end to give the path indicated in figure 13.

The auxiliary part, when fully opened, shall allow a clearance of

l_{70} = 14,8 mm min.

$$l_{71} = 11{,}5 \text{ mm} \begin{matrix} +\ 0{,}2 \text{ mm} \\ -\ 0{,}0 \text{ mm} \end{matrix}$$

l_{72} = 1,2 mm ± 0,1 mm

When the lid is completely open, neither part shall extend above a plane located l_{73} above and parallel to Plane Z.

Copyright International Organization for Standardization
Provided by IHS under license with ISO
No reproduction or networking permitted without license from IHS Not for Resale

l_{73} = 22,3 mm max.

The angle to the bottom of the lid from Plane Z when the lid is completely open shall be

$a_5 = 85^{o}\ {}^{+1^{o}}_{-2^{o}}$

When the lid is in a partially open position, neither part shall extend above a plane located l_{74} above and parallel to Plane Z.

l_{74} = 22,5 mm max.

The path of the top of the lid as it opens shall be defined by

r_2 = 14,9 mm max.

The start point of the incline on the case that meets the lid (cross-section B-B in figure 6) shall be defined by

l_{75} = 8,4 mm max.

The height of the lid from Plane Z (figure 13) shall be

$l_{76} = 15{,}2\ \text{mm}\ {}^{+0{,}0\ \text{mm}}_{-0{,}5\ \text{mm}}$

The front of the lid measured from Plane X shall be

$l_{77} = 15{,}3\ \text{mm}\ {}^{+0{,}0\ \text{mm}}_{-0{,}3\ \text{mm}}$

The inside of the lid shall provide clearance for the tape defined by

l_{78} = 13,15 mm ± 0,10 mm

The top front of the lid shall have a radius r_3. The centre of the radius shall be axis A.

$r_3 = 14{,}7\ \text{mm}\ {}^{+0{,}0\ \text{mm}}_{-0{,}3\ \text{mm}}$

The design of the locking mechanism is not specified by this International Standard except that is shall be operated by a release pin in the drive. The lid release mechanism shall be actuated when the drive release pin is in the shaded area (see figure 15) defined by

l_{79} = 2,0 mm ± 0,1 mm

l_{80} = 8,2 mm ± 0,2 mm

l_{81} = 0,7 mm ± 0,2 mm

$a_6 = 30^{o} \pm 1^{o}$

The force required to unlock the lid lock shall not exceed 0,25 N in the direction shown in figure 18.

The force required to open the lid shall not exceed 1,0 N in the direction shown in figure 19.

8.14 Cartridge reel lock (figure 16)

The reels shall be locked when the cartridge is removed from the tape drive. The design of the locking mechanism is not specified by this International Standard except that it shall be operated by a release pin in the drive.

The locking mechanism shall be accessed through a rectangular hole in the case (see figure 10) defined by the centreline from Plane Y

l_{82} = 34,5 mm ± 0,1 mm;

the top from Plane X

l_{83} = 35,85 mm ± 0,15 mm;

and

l_{84} = 4,0 mm ± 0,1 mm

Copyright International Organization for Standardization
Provided by IHS under license with ISO
No reproduction or networking permitted without license from IHS Not for Resale

l_{85} = 6,5 mm min.

The dimension of the locking mechanism shall be defined by

l_{86} = 3,2 mm $^{+\ 0,3\ mm}_{-\ 0,2\ mm}$

l_{87} = 4,0 mm ± 0,1 mm

$a_7 = 60{,}0^{o} \pm 1{,}0^{o}$

The reels shall be locked when the operating face of the release pin is located l_{88} from Plane X.

l_{88} = 39,0 mm $^{+\ 2,0\ mm}_{-\ 0,0\ mm}$

The reels shall be unlocked when the operating face of the release pin is located l_{89} from Plane X.

l_{89} = 41,75 mm $^{+\ 0,50\ mm}_{-\ 0,00\ mm}$

In this position there shall be a clearance of l_{90} between the locking mechanism and the inside of the rear wall of the cartridge.

l_{90} = 0,5 mm min.

The pin used to move the locking mechanism shall penetrate the cartridge a distance of

l_{91} = 7,8 mm max.

The cavity of the locking mechanism shall be defined by

l_{92} = 4,0 mm ± 0,1 mm

r_4 = 0,3 mm max.

The force required to unlock the reel lock in the direction shown in figure 17 shall not exceed 1,0 N.

8.15 Reel access holes (figure 10)

The case shall have two circular reel access holes which shall allow penetration of the drive spindles.

The positions of the access holes shall be defined by

l_{93} = 23,00 mm ± 0,05 mm

l_{94} = 11,40 mm ± 0,05 mm

l_{95} = 46,2 mm ± 0,1 mm

The diameter of the holes shall be

d_2 = 18,80 mm ± 0,05 mm

8.16 Interface between the reels and the drive spindles

The drive spindles (see figures 22 and 23) shall engage the reels in the area defined by

l_{96} = 11,75 mm ± 0,15 mm

l_{97} = 8,30 mm ± 0,05 mm

l_{98} = 0,6 mm ± 0,1 mm

l_{99} = 0,3 mm ± 0,1 mm

l_{100} = 1,10 mm ± 0,05 mm

l_{101} = 0,6 mm max.

l_{102} = 5,4 mm ± 0,1 mm

l_{103} = 4,4 mm ± 0,1 mm

Copyright International Organization for Standardization
Provided by IHS under license with ISO
No reproduction or networking permitted without license from IHS Not for Resale

l_{104} = 0,6 mm max.

d_4 = 10,00 mm $^{+\ 0,08\ mm}_{-\ 0,00\ mm}$

d_5 = 16,0 mm max.

d_6 = 18,0 mm $^{+\ 0,0\ mm}_{-\ 0,1\ mm}$

d_7 = 16,0 mm $^{+\ 0,0\ mm}_{-\ 0,1\ mm}$

d_8 = 45,1 mm $^{+\ 0,0\ mm}_{-\ 0,5\ mm}$

d_9 = 45,1 mm $^{+\ 0,0\ mm}_{-\ 0,2\ mm}$

There shall be a chamfer of the reel driving hole defined by

l_{105} = 2,4 mm ± 0,1 mm

$a_9 = 15^o \pm 1^o$

There shall be a chamfer at the bottom of the reel on the outside edge defined by

l_{106} = 0,2 mm max.

$a_8 = 45^o \pm 1^o$

The position and width of the slots to receive the reel drive spindle shall be defined by

l_{107} = 2,4 mm $^{+\ 0,2\ mm}_{-\ 0,0\ mm}$

$a_{10} = 60^o \pm 1^o$

The teeth in the reel driving hole shall have a radius

r_5 = 0,2 mm max.

The depth l_{108} of the reel driving hole shall be effective to the diameter d_3.

l_{108} = 9,4 mm min.

d_3 = 6,50 mm $^{+\ 0,08\ mm}_{-\ 0,00\ mm}$

When the tape is loaded in the drive, the position of the tape centre relative to Plane Z shall be

l_{109} = 7,05 mm ± 0,10 mm

When the tape is loaded in the drive, the position of the reel relative to Plane Z shall be

l_{110} = 0,6 mm ± 0,2 mm

The penetration of the reel drive spindle into the reel shall be defined by

l_{111} = 7,5 mm max.

l_{112} = 8,0 mm max.

l_{113} = 1,20 mm ± 0,05 mm

l_{114} = 1,40 mm ± 0,05 mm

$a_{11} = 60^0 \pm 1^o$

Copyright International Organization for Standardization
Provided by IHS under license with ISO
No reproduction or networking permitted without license from IHS Not for Resale

When the cartridge is mounted in the drive and the Support areas are at a distance l_{110} from Plane Z, the reel spring force F shall be 0,6 N ± 0,2 N in the direction shown in figure 23.

8.17 Light path (figures 10, 12, 20 and 21)

A light path shall be provided for sensing the leader and trailer tapes. When the lid is open, an unobstructed light path shall exist from the d_{10} diameter light path hole to the outside of the cartridge via square windows in the light path hole (see cross-section D-D in figure 12) and the light window in the cartridge lid.

The centre of the light path hole shall be defined by l_{82} and

l_{115} = 8,35 mm ± 0,10 mm

The diameter of the light path hole shall be

$d_{10} = 6{,}5\ ^{+0{,}3\ \text{mm}}_{-0{,}0\ \text{mm}}$

The light path hole shall have a chamfer defined by

l_{116} = 0,5 mm max.

$a_{12} = 45^{o} \pm 1^{o}$

The position and size of the square window on each side of the light path hole shall be

l_{117} = 6,05 mm ± 0,10 mm

$l_{118} = 2{,}5\ ^{+0{,}4\ \text{mm}}_{-0{,}0\ \text{mm}}$

The hole shall be deep enough to allow penetration of a light emitter a distance of

l_{119} = 12,5 mm min.

The angle of the light path shall be

$a_{13} = 5{,}50^{o} \pm 0{,}25^{o}$

The position and size of the cartridge lid window shall be

l_{120} = 3,8 mm ± 0,1 mm

$l_{121} = 2{,}5\ ^{+0{,}4\ \text{mm}}_{-0{,}0\ \text{mm}}$

l_{122} = 6,05 mm ± 0,10 mm

8.18 Position of the tape in the case (figure 21)

The tape shall run between two guide surfaces in a plane parallel to Plane X and l_{123} from it.

l_{123} = 10,15 mm ± 0,10 mm

The guide surfaces shall have a radius of r_6 and shall be tangential, as shown in figure 21, to lines tangential to the reel hubs that extend to points outside the case.

r_6 = 3,0 mm ± 0,1 mm

These points shall be defined by

l_{124} = 76,28 mm ± 0,30 mm

l_{125} = 27,15 mm ± 0,20 mm

l_{126} = 31,15 mm ± 0,20 mm

l_{127} = 9,67 mm ± 0,10 mm

Copyright International Organization for Standardization
Provided by IHS under license with ISO
No reproduction or networking permitted without license from IHS Not for Resale

8.19 Tape path zone

When the cartridge is inserted into the drive, the tape is pulled outside the case by tape guides and is no longer in contact with the guide surfaces. The tape path zone (see figure 21) of the case is the zone in which the tape shall be able to move freely. This zone shall be maintained for both sides of the case and shall be defined by l_{124} to l_{127} and

l_{128} = 23,0 mm ± 0,1 mm

l_{129} = 0,3 mm min.

l_{130} = 46,2 mm ± 0,2 mm

l_{131} = 11,4 mm ± 0,1 mm

The clearance between the tape and the guides shall be defined by

l_{132} = 0,3 mm min.

8.20 Tape access cavity (figure 10)

When the cartridge is inserted into the drive, tape guides in the drive pull the tape into the drive tape path. The two radii r_7 are centred on Datum holes A and B. The shape and dimensions of the access cavity for these tape guides shall be defined by l_{63} and l_{64}, and the following

r_7 = 2,3 mm ± 0,1 mm

The two radii r_8 are centred on the centres of the reel access holes.

r_8 = 24,15 mm ± 0,10 mm

l_{133} = 3,85 mm ± 0,10 mm

8.21 Tape access cavity clearance requirements (figure 24)

The case design shall provide clearance for drive tape threading mechanisms and shall be defined by

l_{134} = 1,2 mm max.

l_{135} = 1,15 mm $^{+\ 0,20\ mm}_{-\ 0,00\ mm}$

l_{136} = 14,0 mm $^{+\ 0,0\ mm}_{-\ 0,2\ mm}$

l_{137} = 66,8 mm min.

l_{138} = 10,0 mm min.

l_{139} = 14,8 mm ± 0,1 mm

a_{14} = 49° max.

--`,,```,,,,````-`-`,,`,,`,`,,`---

Copyright International Organization for Standardization
Provided by IHS under license with ISO
No reproduction or networking permitted without license from IHS Not for Resale

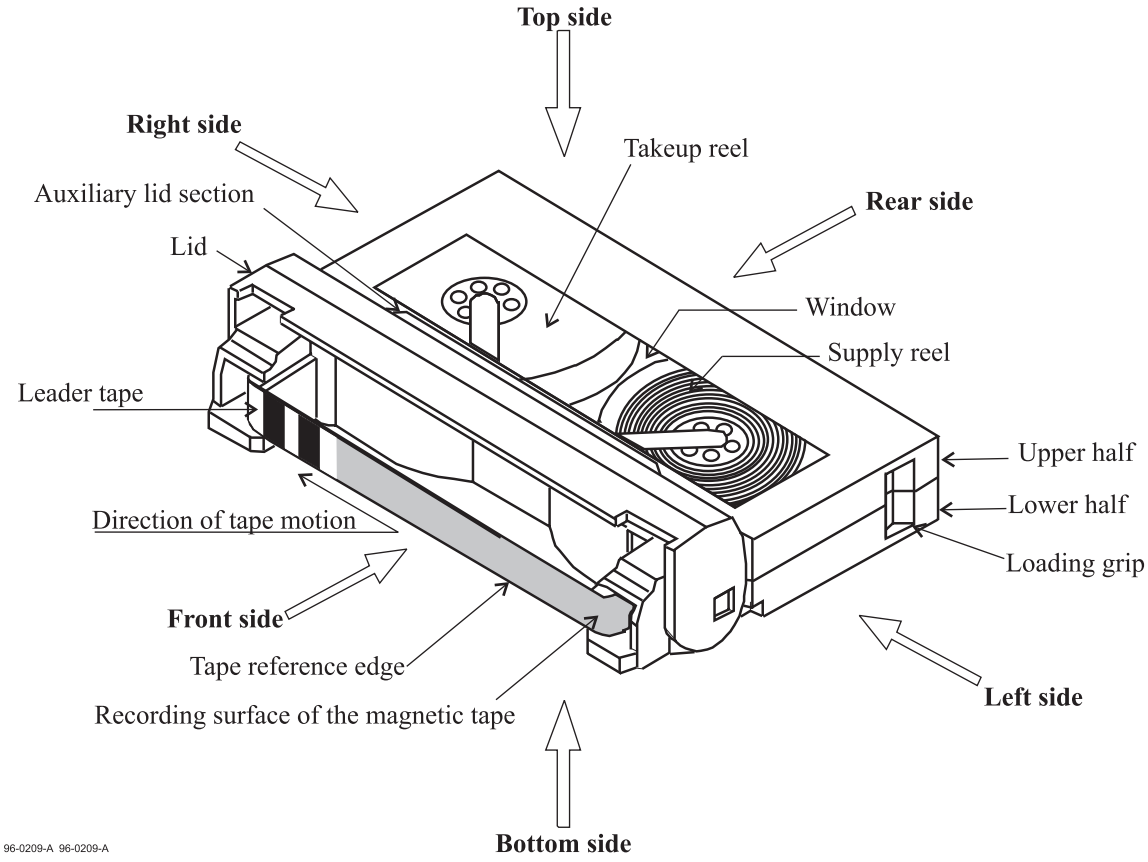

Figure 1 - Tape cartridge assembly top view, lid opened

--`,,```,,,,````-`-`,,`,,`,`,,`---

Copyright International Organization for Standardization
Provided by IHS under license with ISO
No reproduction or networking permitted without license from IHS
Not for Resale

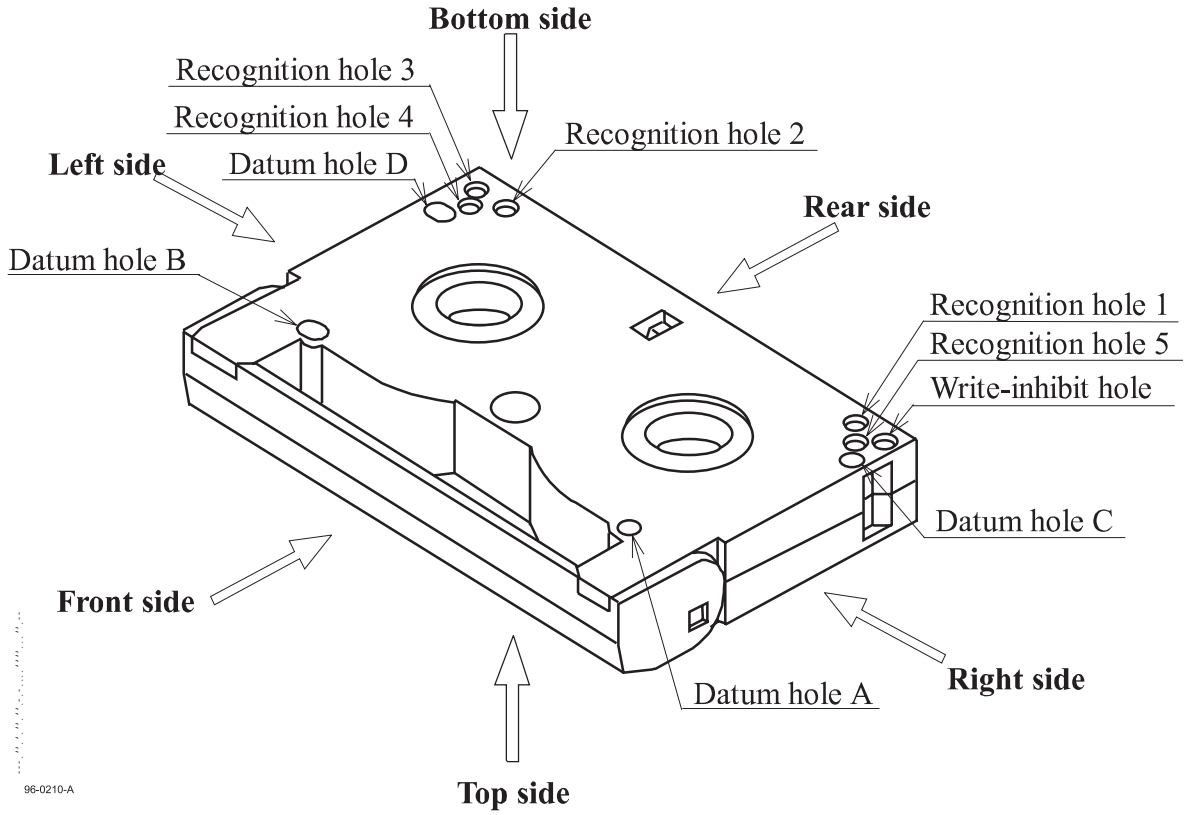

Figure 2 - Tape cartridge assembly bottom view, lid closed

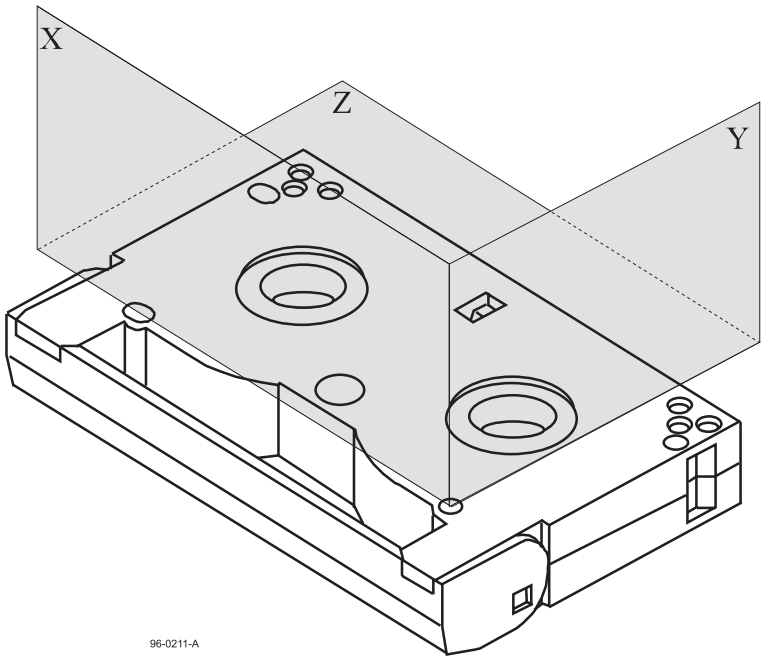

Figure 3 - Reference Planes X, Y, and Z

Copyright International Organization for Standardization
Provided by IHS under license with ISO
No reproduction or networking permitted without license from IHS
Not for Resale

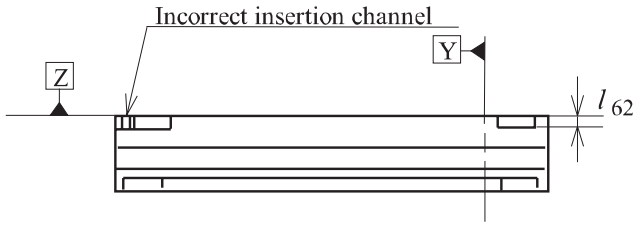

Figure 4 - Front side, lid closed

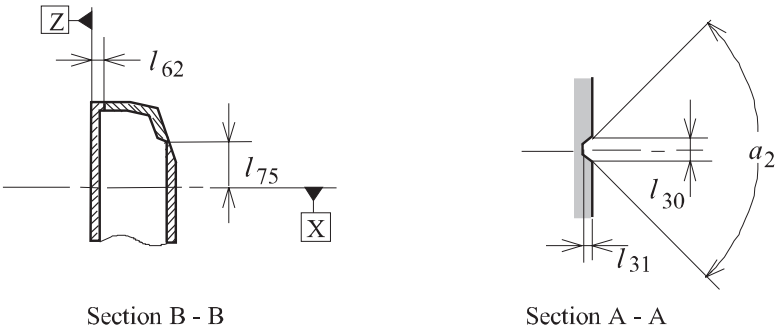

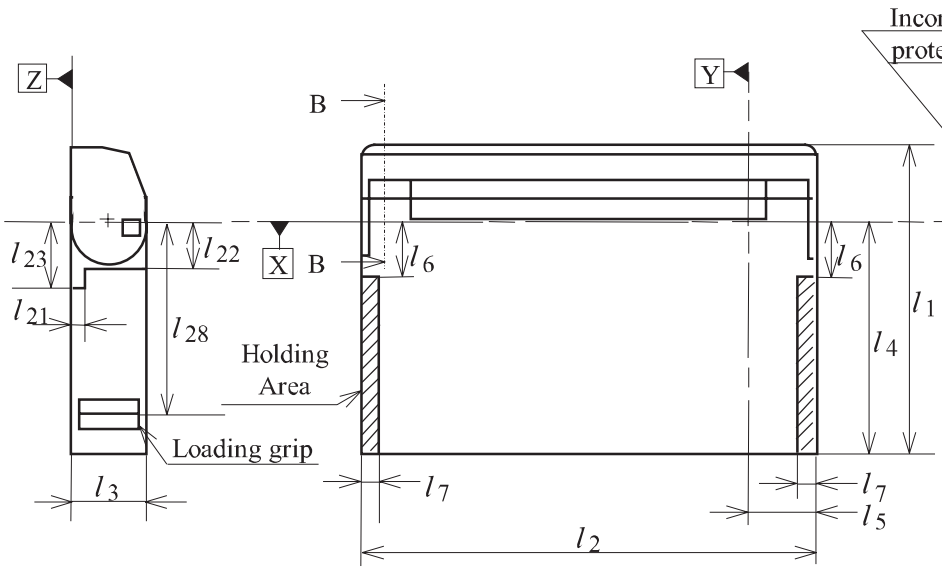

Figure 5 - Left side, lid closed

Figure 6 - Top side, lid closed

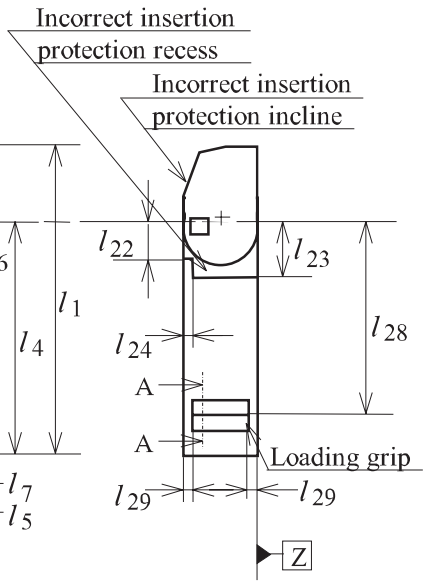

Figure 7 - Right side, lid closed

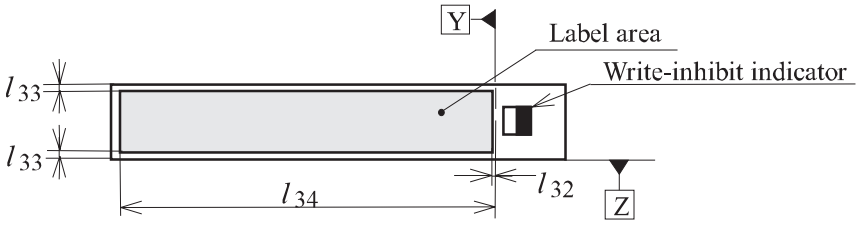

Figure 8 - Rear side, lid closed

96-0213-A

Copyright International Organization for Standardization
Provided by IHS under license with ISO
No reproduction or networking permitted without license from IHS
Not for Resale

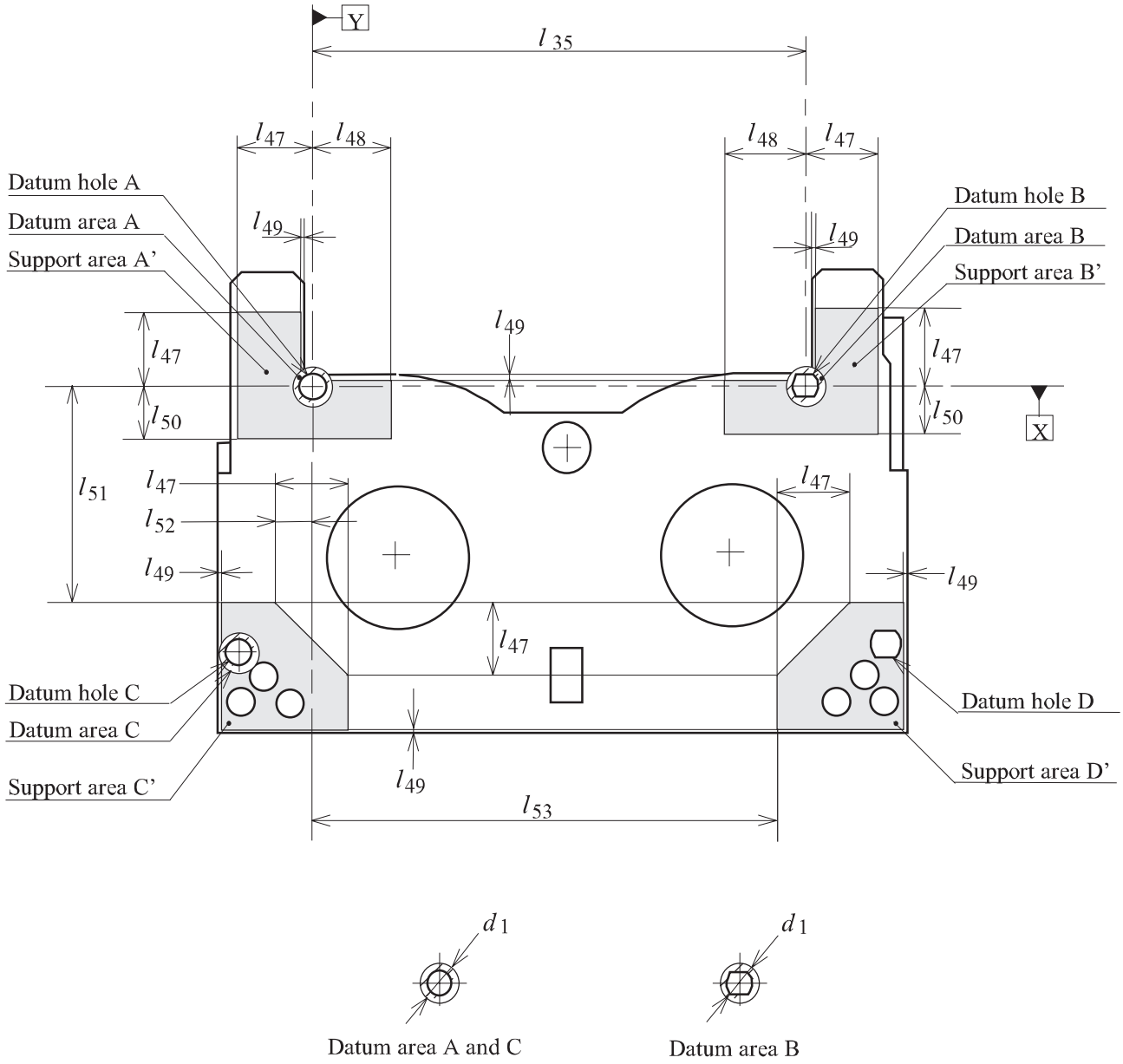

Figure 9 - Bottom side, Datum and Support areas

Copyright International Organization for Standardization
Provided by IHS under license with ISO
No reproduction or networking permitted without license from IHS
Not for Resale

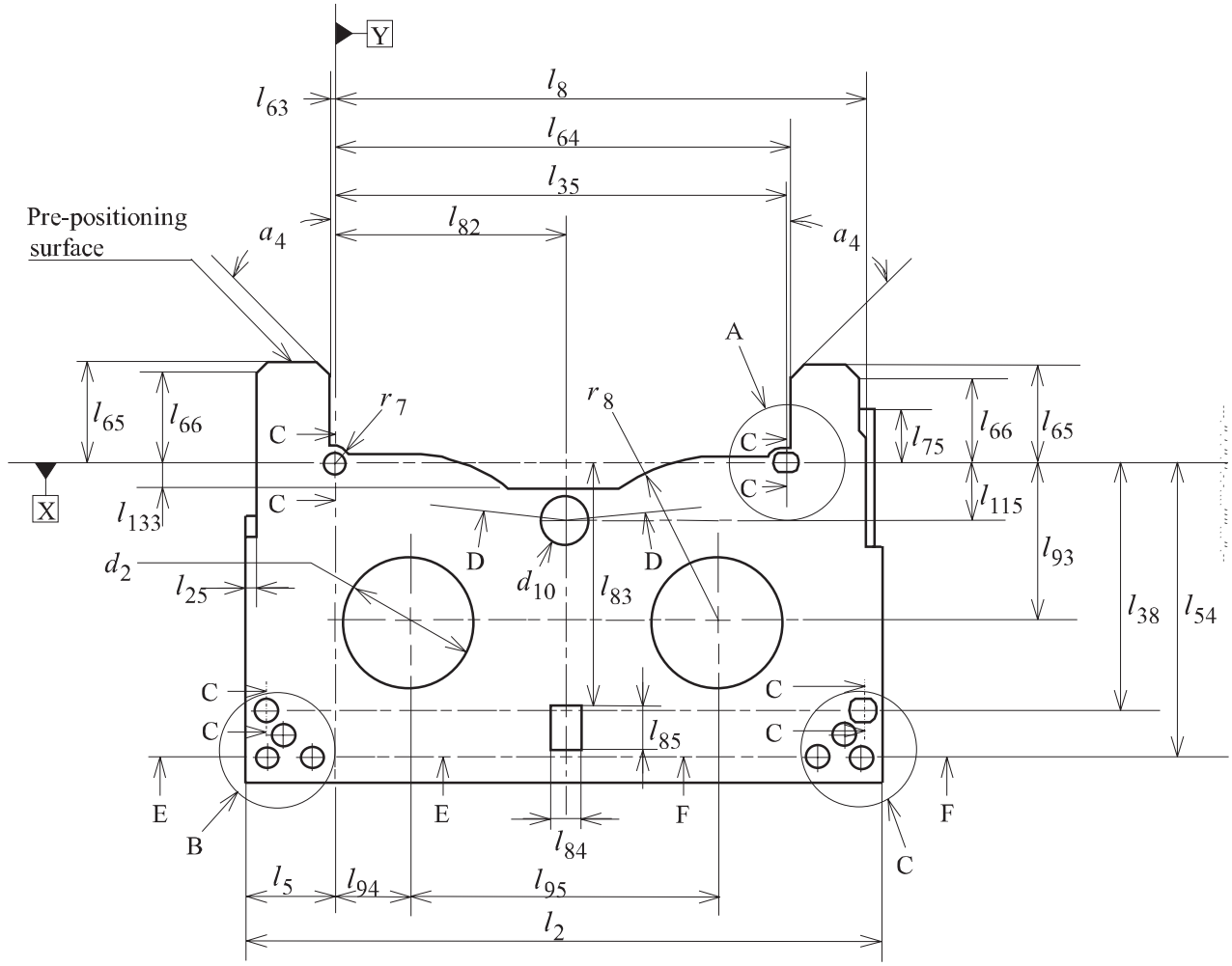

96-0215-A

Figure 10 - Bottom side, lid removed

Copyright International Organization for Standardization
Provided by IHS under license with ISO
No reproduction or networking permitted without license from IHS
Not for Resale

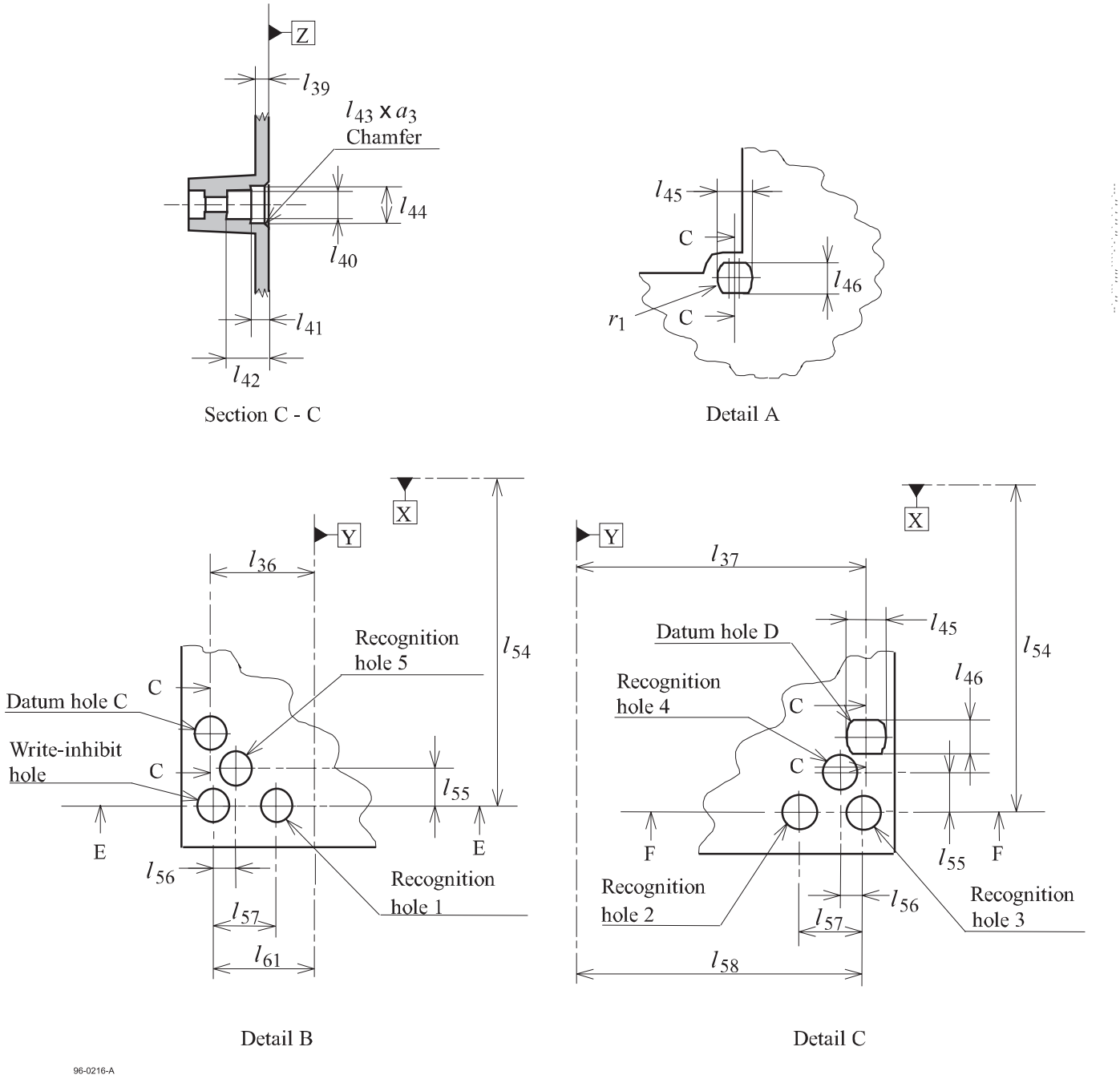

Figure 11 - Details of datum and recognition holes

Copyright International Organization for Standardization
Provided by IHS under license with ISO
No reproduction or networking permitted without license from IHS
Not for Resale

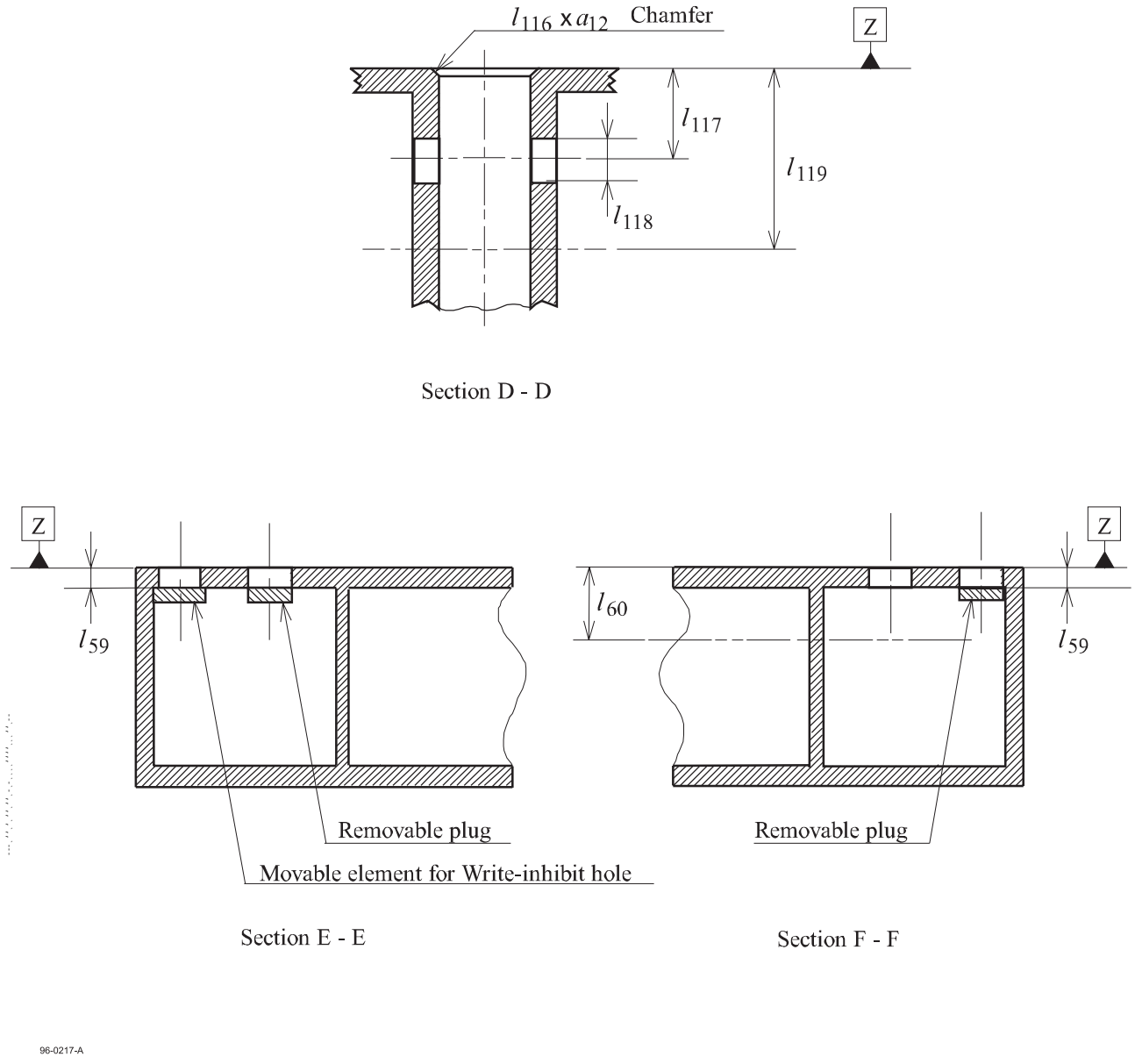

Figure 12 - Cross-sections of light path holes, recognition holes and write-inhibit hole

Copyright International Organization for Standardization
Provided by IHS under license with ISO
No reproduction or networking permitted without license from IHS
Not for Resale

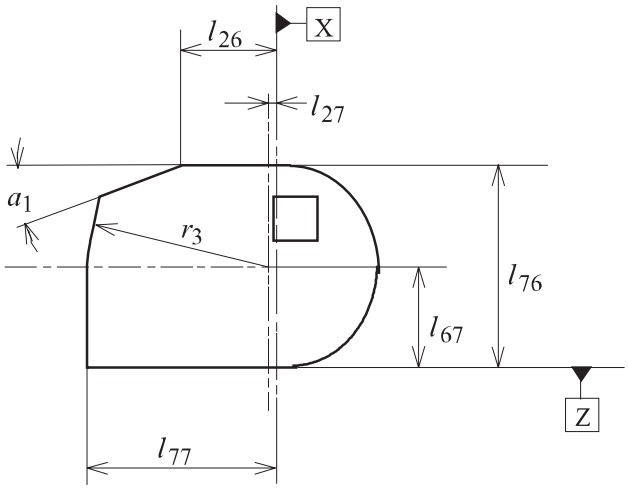

a) Details of the side of the lid

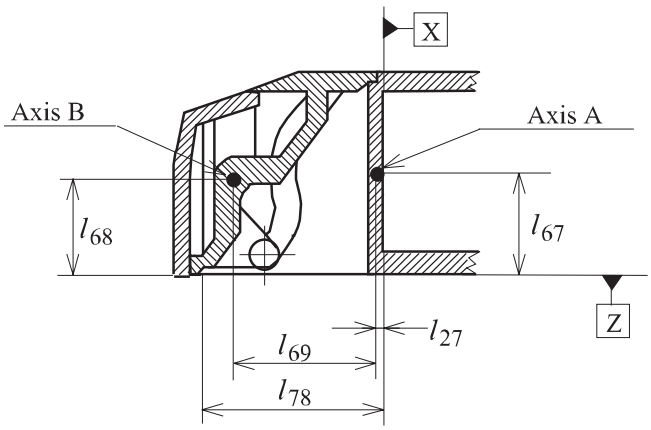

b) Internal lid structure

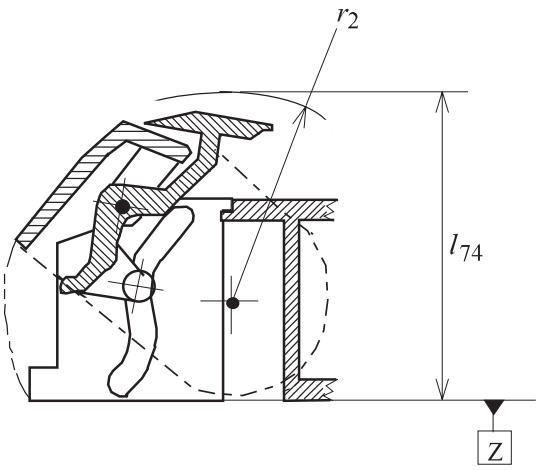

c) Lid configuration
when rotating

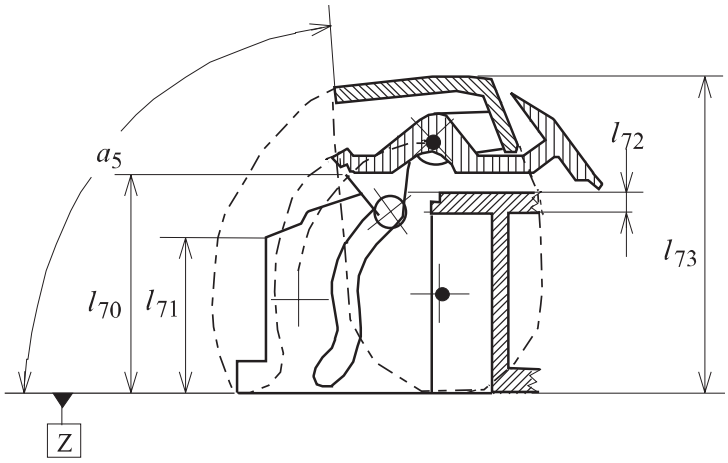

d) Lid configuration
when the lid is open

96-0218-A

Figure 13 - Lid

Copyright International Organization for Standardization
Provided by IHS under license with ISO
No reproduction or networking permitted without license from IHS
Not for Resale

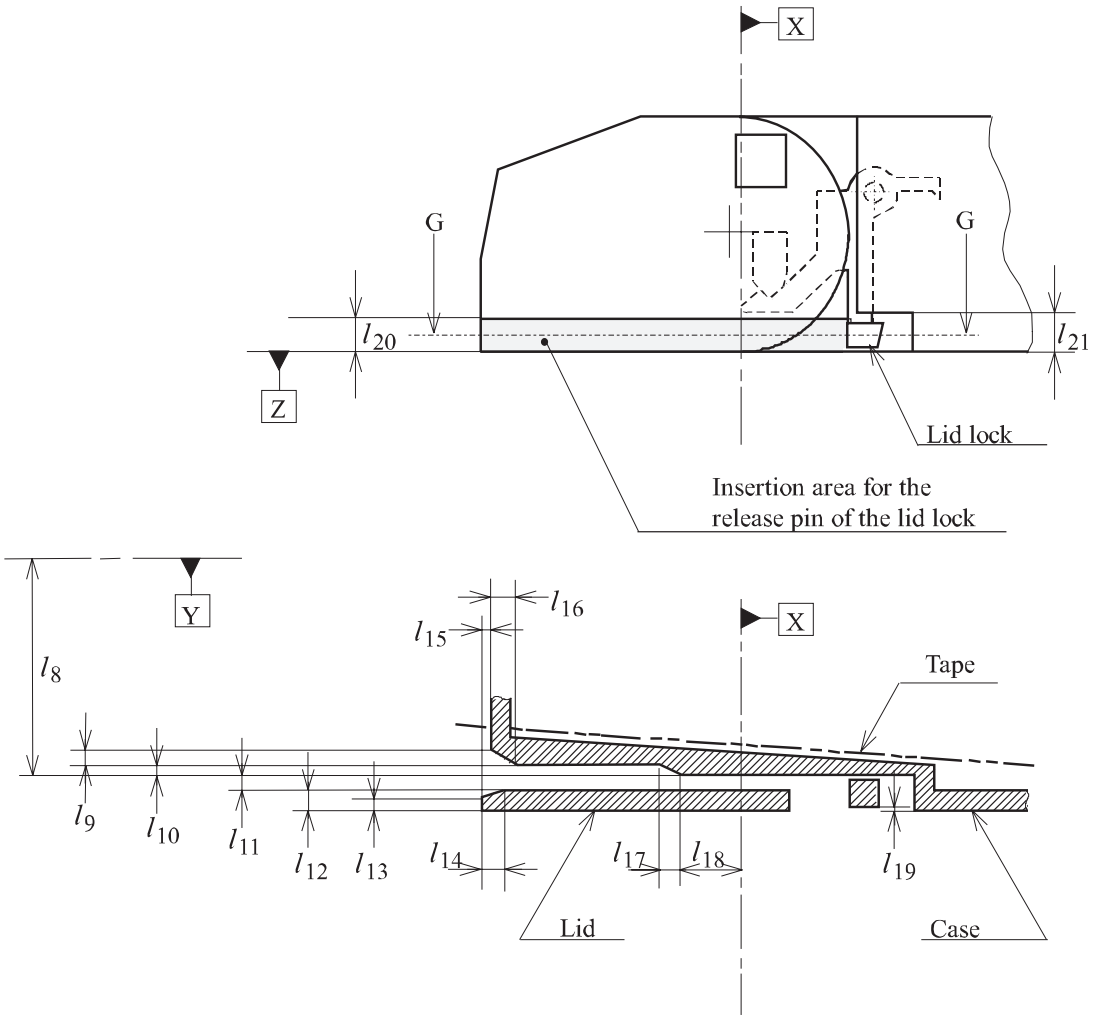

96-0219-A

Figure 14 - Lid release insertion channel

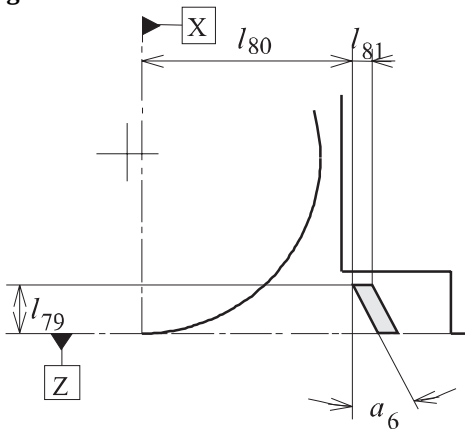

96-0220-A

Figure 15 - Lid release requirement

Copyright International Organization for Standardization
Provided by IHS under license with ISO
No reproduction or networking permitted without license from IHS
Not for Resale

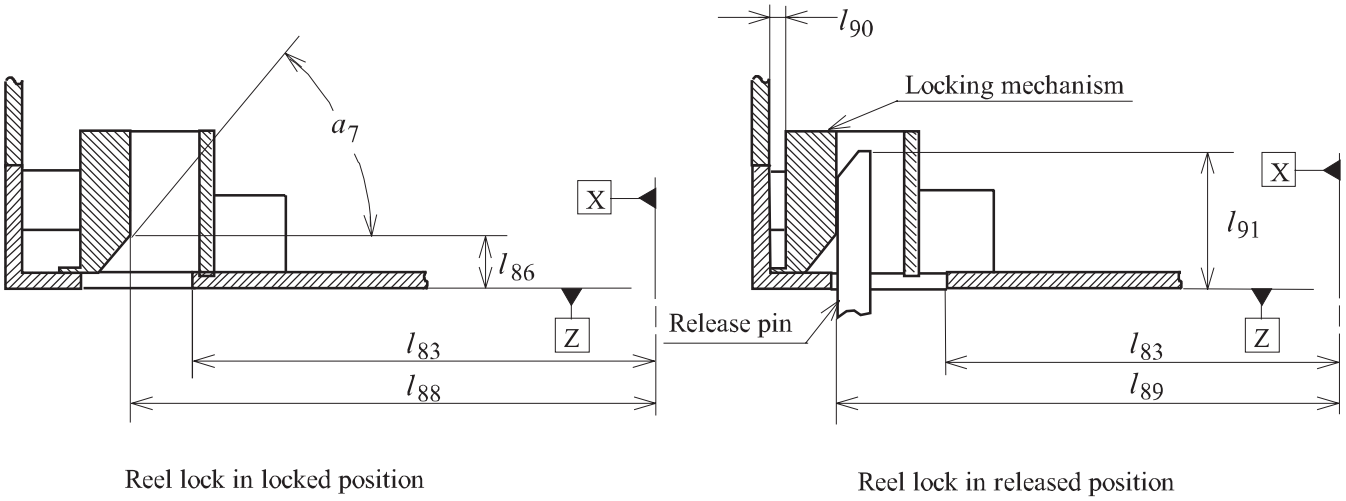

Reel lock in locked position

Reel lock in released position

Section L - L of figure 21

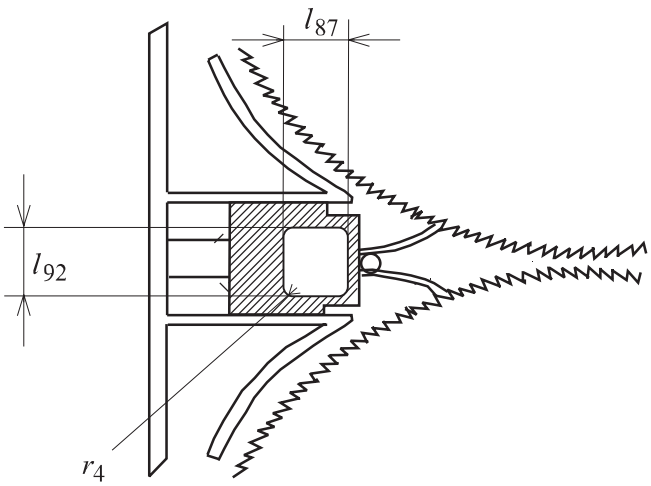

Detail E of figure 21

96-0221-A

Figure 16 - Reel lock and release

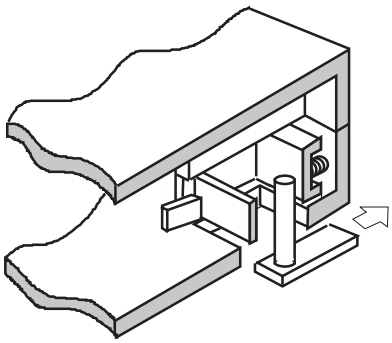

96-0222-A

Figure 17 - Direction of force needed to unlock the reel lock

Copyright International Organization for Standardization
Provided by IHS under license with ISO
No reproduction or networking permitted without license from IHS
Not for Resale

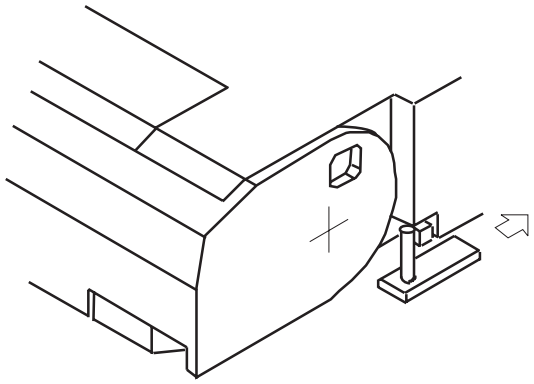

96-0223-A

Figure 18 - Direction of force needed to unlock the lid lock

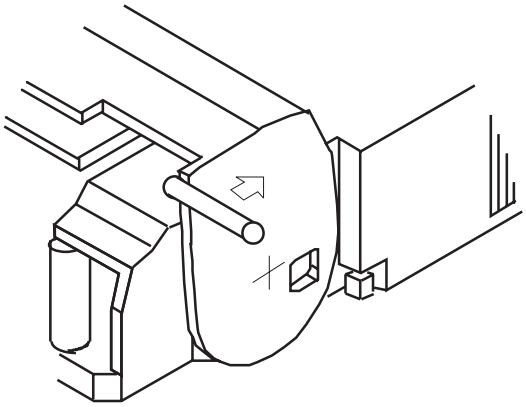

96-0224-A

Figure 19 - Direction of force needed to open the lid

--`,,```,,,,````-`-`,,`,,`,`,,`---

Copyright International Organization for Standardization
Provided by IHS under license with ISO
No reproduction or networking permitted without license from IHS

Not for Resale

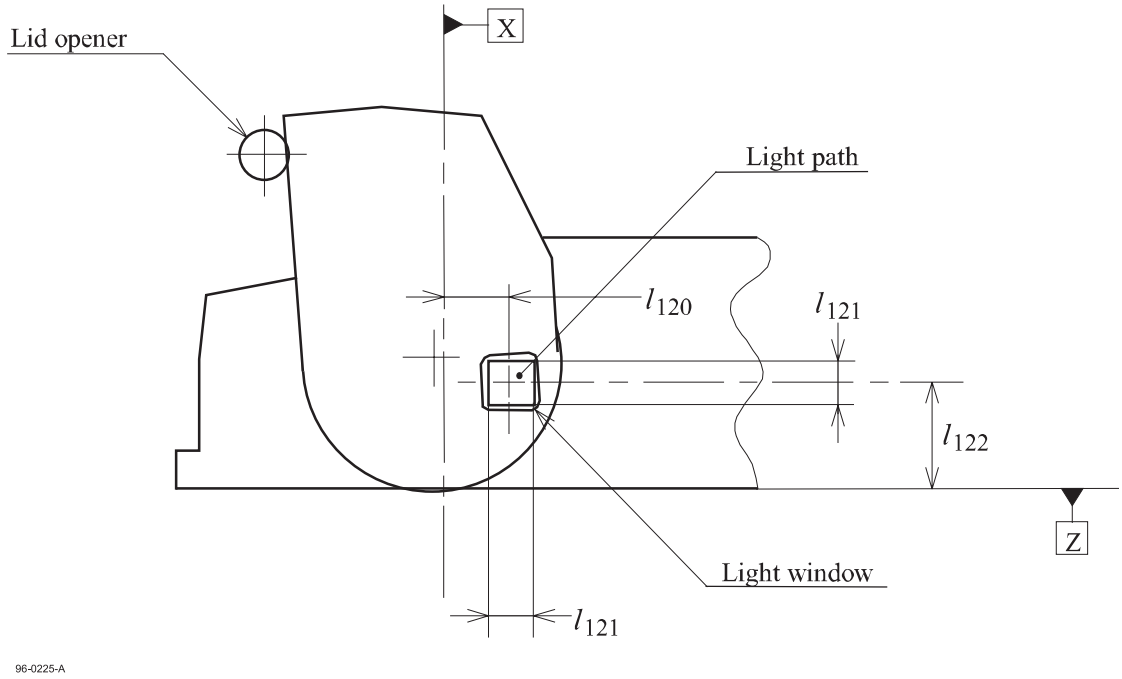

Figure 20 - Light path and light window

--`,,```,,,,````-`-`,,`,,`,`,,`---
Copyright International Organization for Standardization
Provided by IHS under license with ISO
No reproduction or networking permitted without license from IHS
Not for Resale

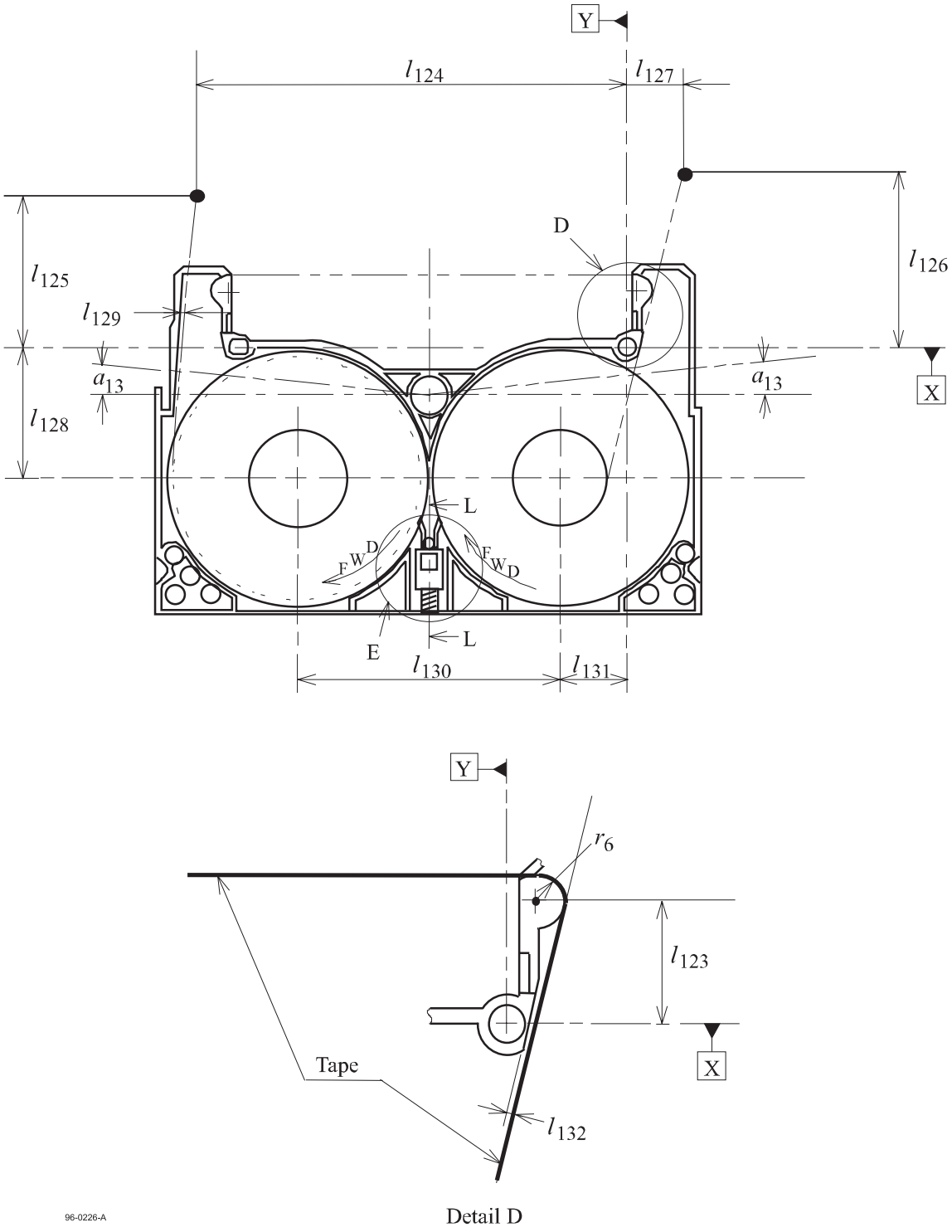

Figure 21 - Internal tape path and light path

Copyright International Organization for Standardization
Provided by IHS under license with ISO
No reproduction or networking permitted without license from IHS
Not for Resale

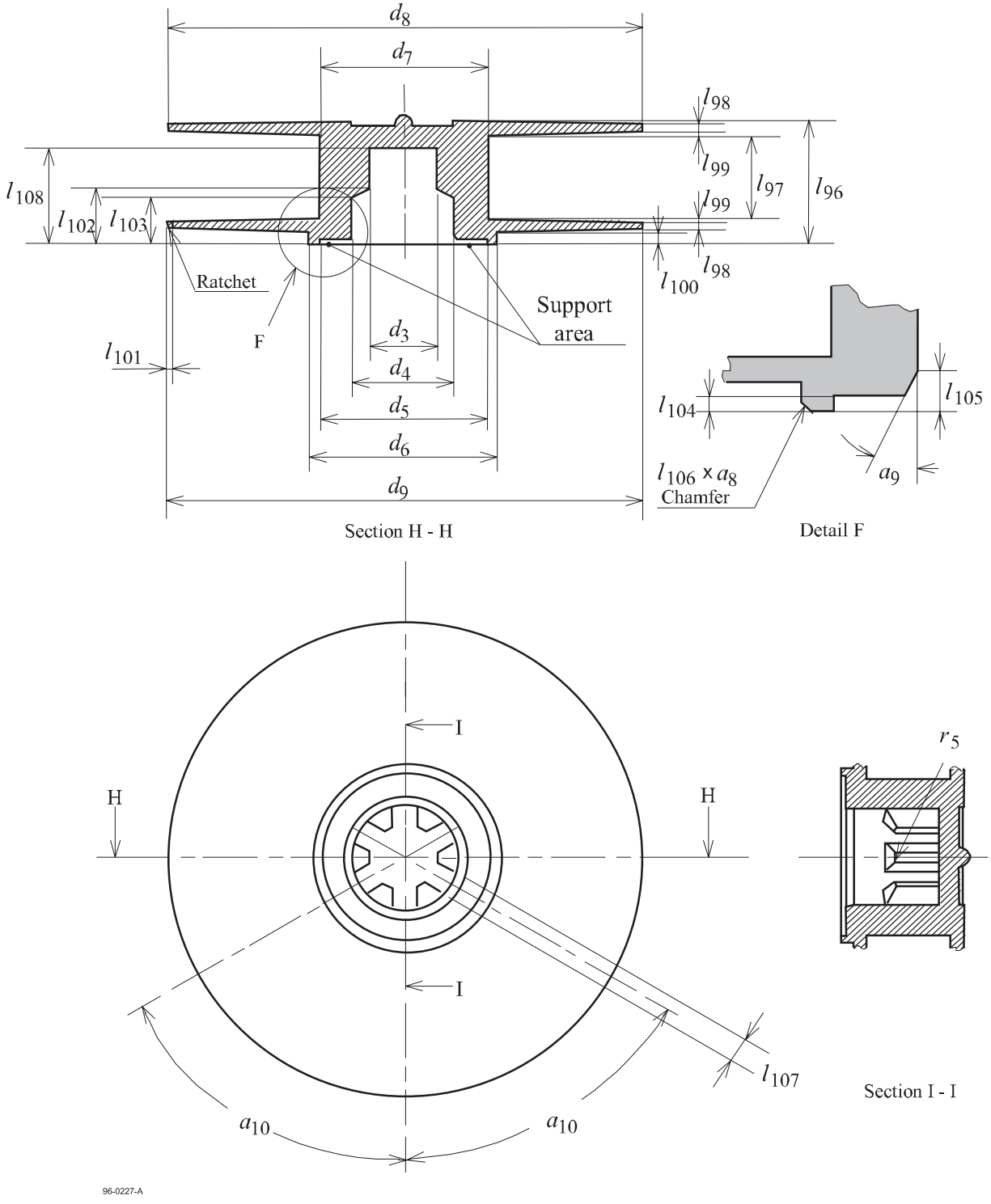

Figure 22 - Cartridge reel

Copyright International Organization for Standardization
Provided by IHS under license with ISO
No reproduction or networking permitted without license from IHS
Not for Resale

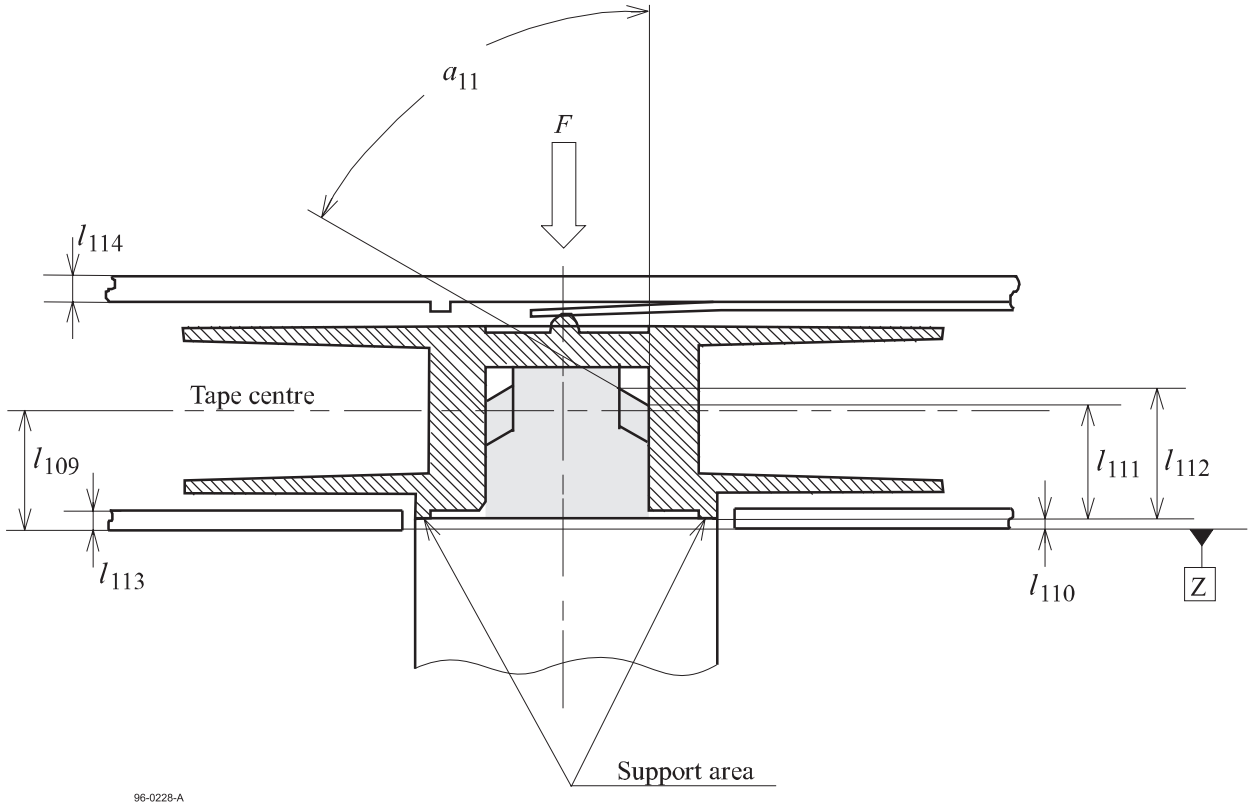

Figure 23 - Interface with drive spindle

Copyright International Organization for Standardization
Provided by IHS under license with ISO
No reproduction or networking permitted without license from IHS
Not for Resale

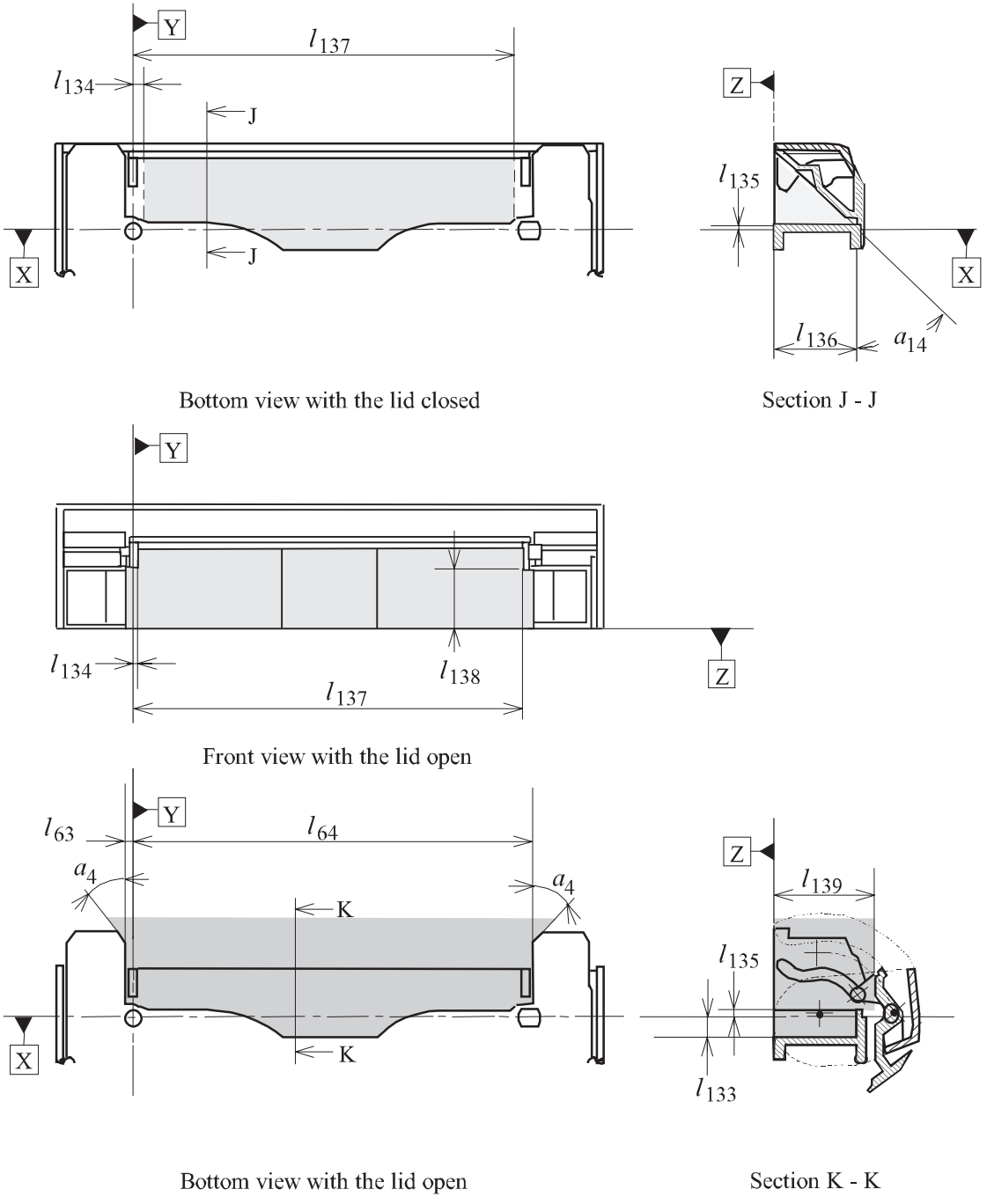

Figure 24 - Tape access cavity clearance

Copyright International Organization for Standardization
Provided by IHS under license with ISO
No reproduction or networking permitted without license from IHS
Not for Resale

Section 3 - Requirements for the Unrecorded Tape

9 Mechanical, physical and dimensional characteristics of the tape

9.1 Materials

The recordable area of the tape shall consist of polyethylene naphthalate film base material (or its equivalent) coated on one side with a strong yet flexible layer of ferromagnetic material. The back surface of the tape may be coated.

There shall be a leader tape between the take-up hub and the PBOT. There shall be a trailer tape between PEOT and the supply hub. The leader and trailer tapes shall consist of a translucent length of polyethylene terephthalate film (or its equivalent) base material without the ferromagnetic coating and the back coating, if any.

The leader and trailer tapes shall each be attached to the magnetic tape by means of a length of splicing tape which extends over each such joint. The splicing tape shall consist of polyethylene terephthalate (or its equivalent), coated on one side with an acrylic (or equivalent) adhesive material.

9.2 Tape length

9.2.1 Magnetic tape

The length of tape between PBOT and PEOT shall be in the range 10 m to 163 m.

9.2.2 Leader and trailer tapes

The length of the leader tape shall be in the range of 76 mm to 90 mm. The length of the trailer tape shall be in the range of 70 mm to 90 mm.

9.2.3 Splicing tape

The splicing tape shall extend over the leader and trailer tapes for a distance in the range of 5,5 mm to 7,0 mm. Their extents over the magnetic tape shall be in the range of 4,0 mm to 10,0 mm.

9.3 Tape width

9.3.1 Width of magnetic tape

The width of the magnetic tape shall be 8,00 mm ± 0,01 mm. The difference between the largest and smallest width shall be no more than 6 µm.

The width shall be measured across the tape from edge to edge when the tape is under tension of 0,10 N ± 0,01 N and is lying flat between glass slides.

9.3.2 Width of leader and trailer tapes

The width of the leader and trailer tapes shall be 8,00 mm ± 0,02 mm.

The width shall be measured across the tape from edge to edge when the tape is under tension of 0,10 N ± 0,01 N and is lying flat between glass slides.

9.3.3 Width and position of splicing tape

The width of the splicing tape and its position across the width of the leader, trailer and magnetic tapes shall be such that the width of the splicing tape shall be

$$8{,}00 \text{ mm} \begin{array}{l} +\ 0{,}02 \text{ mm} \\ -\ 0{,}50 \text{ mm} \end{array}$$

Neither edge of the splicing tape shall extend beyond the edges of the leader, trailer and magnetic tapes.

9.4 Discontinuities

There shall be no discontinuities in the tape between PBOT and PEOT, such as those produced by tape splicings or perforations.

9.5 Thickness

9.5.1 Thickness of the magnetic tape

The total thickness of the magnetic tape shall be 7,5 µm ± 0,4 µm.

Copyright International Organization for Standardization
Provided by IHS under license with ISO
No reproduction or networking permitted without license from IHS Not for Resale

9.5.2 Thickness of leader and trailer tape

The thickness of the leader and trailer tape shall be between 13 µm and 17 µm.

9.5.3 Thickness of the splicing tape

The thickness of the splicing tape shall be 27 µm max.

9.6 Longitudinal curvature

The radius of curvature of the edge of the tape shall not be less than 33 m.

Procedure

- Allow a 1 m length of tape to unroll and assume its natural curvature on a flat smooth surface.
- Measure the deviation from a 1 m chord.

The deviation shall not be greater than 3,8 mm.

This deviation corresponds to the minimum radius of curvature of 33 m if measured over an arc of a circle.

9.7 Cupping

The departure across the width of tape from a flat surface shall not exceed 0,9 mm.

Procedure

- Cut a 1,0 m ± 0,1 m length of tape.
- Condition it for a minimum of 3 h in the test environment by hanging it so that the coated surface is freely exposed to the test environment. From the centre portion of the conditioned tape cut a test piece of length 25 mm approximately.
- Stand the test piece on its end in a cylinder which is at least 25 mm high with a minimum inside diameter of 8 mm.
- With the cylinder standing on an optical comparator measure the cupping by aligning the edges of the test piece to the reticle and determining the distance from the aligned edges to the corresponding surface of the test piece at its centre.

9.8 Coating adhesion

The force required to peel any part of the coating from the tape base material shall not be less than 0,10 N (see figure 25).

Procedure

- Take a test piece of the tape approximately 380 mm long.
- Scribe a line through the coating across the width of the tape 125 mm from one end.
- Using a double-sided pressure sensitive tape, attach the test piece to a smooth metal plate, with the coated surface facing the plate.
- Fold the test piece over 180° adjacent to, and parallel with the scribed line.
- Attach the metal plate and the free end of the test piece to the jaws of a tensometer such that when the jaws are separated the tape is peeled.
- Set the jaw separation rate to 254 mm/min.
- Note the force at which any part of the coating first separates from the base material. If this is less than 0,10 N, the tape has failed the test.
- If the test piece peels away from the double-sided pressure sensitive tape before the force exceeds 0,10 N, an alternative type of double-sided pressure tape shall be used.
- If the back surface of the tape is coated, repeat the above steps for the back coating.

Copyright International Organization for Standardization
Provided by IHS under license with ISO
No reproduction or networking permitted without license from IHS Not for Resale

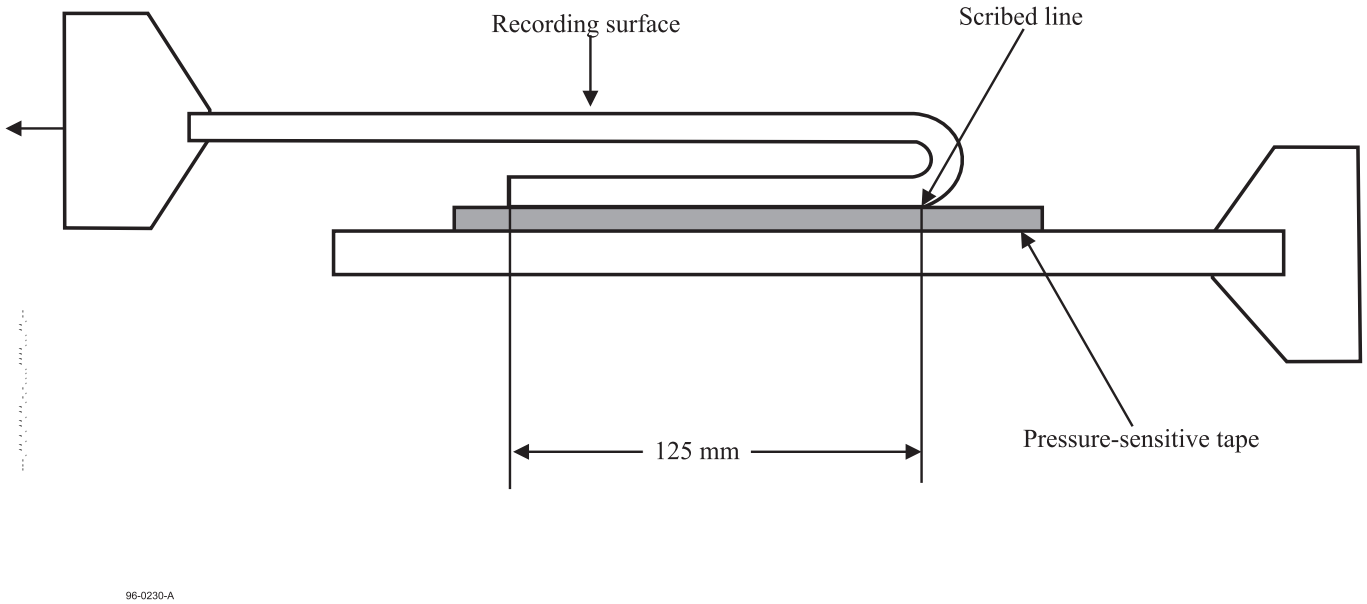

Figure 25 - Measurement of coating adhesion

9.9 Layer-to-layer adhesion

There shall be no tendency for the test piece to stick or for the coating to peel.

Procedure

- Attach one end of a test piece of magnetic tape of 1 m in length to the surface of a glass tube of external diameter 36 mm.
- Wind the tape on to the tube at a tension of 1,1 N.
- Store the wound test piece in a temperature of 45 ^{o}C ± 3 ^{o}C and a relative humidity of 80 % for 4 h.
- Store for a further 24 h in the testing environment.
- Apply a force of 0,1 N to the free end of the test piece and allow it to unwind slowly.

9.10 Tensile strength

The measurements shall be made in accordance with ISO 527-1.

The length of the test piece shall be 200 mm. The rate of elongation for all tensile tests shall be 100 mm/min.(ISO 527-1).

9.10.1 Breaking strength

Load the test piece until the breaking point of the test piece is reached. The force required to reach that point is the breaking strength of the tape. The breaking strength shall not be less than 10,0 N.

9.10.2 Yield strength

The yield strength is the force necessary to produce a 5 % elongation of the tape.

The yield strength shall be greater than 4,9 N.

9.11 Residual elongation

The residual elongation, stated in per cent of the original tape length, shall be less than 0,03 %.

Procedure

- Measure the initial length of a test piece of approximately 1 m with a maximum applied force of 0,20 N.
- Apply an additional force per total cross-sectional area of 20,5 N/mm^2 for a period of 10 min.
- Remove the additional force and measure the length after 10 min.

9.12 Electrical resistance of coated surfaces

The electrical resistance of coated surfaces shall be within the ranges:

10^5 Ω to 5 x 10^8 Ω for non-back-coated tape

10^5 Ω to 5 x 10^{12} Ω for back-coated tape

Copyright International Organization for Standardization
Provided by IHS under license with ISO
No reproduction or networking permitted without license from IHS
Not for Resale

The electrical resistance of any square area of the back-coating, if present, shall be less than 9×10^8 Ω.

Procedure

- Condition a test piece of tape in the test environment for 24 h.
- Position the test piece over two 24-carat gold-plated, semicircular electrodes having a radius r = 10 mm and a finish of at least N4, so that the recording surface is in contact with each electrode. These electrodes shall be placed parallel to the ground and parallel to each other at a distance d = 8 mm between their centres.
- Apply the force necessary to produce a tension of 5 N/mm^2 to each end of the test piece.
- Apply a d.c. voltage of 100 V ± 10 V across the electrodes and measure the resulting current flow. From this value, determine the electrical resistance.
- Repeat for a total of five positions along the test piece and average the five resistance readings.
- For back-coated tape repeat the procedure with the back-coating in contact with the electrodes.
- When mounting the test piece ensure that no conducting paths exist between the electrodes except that through the coating under test.

Note - Particular attention should be given to keeping the surfaces clean.

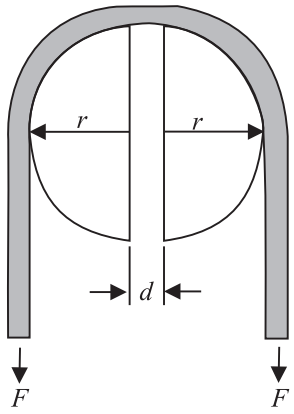

96-0231-A

Figure 26 - Measurement of electrical resistance

9.13 Tape winding

The magnetic recording surface of the tape shall face outward from the cartridge and reels.

9.14 Light transmittance of tape

The light transmittance of the magnetic tape shall be 5 % max.

The light transmittance of the leader and trailer tapes shall be 60 % min.

The method for measuring light transmittance is given in annex A.

9.15 Media Recognition System (MRS)

A pattern of opaque stripes shall exist on the leader tape close to PBOT. Each stripe shall extend across the entire width of the leader tape (see figure 27).

The boundaries between adjacent stripes shall be perpendicular to the Tape Reference Edge to within 10°. The length of each opaque stripe and of each clear stripe, measured parallel to the Tape Reference Edge, shall be 3,0 mm ± 0,2 mm, including the effects of any deviation from parallelism between such boundaries.

The light transmittance through the opaque stripes shall be less than, or equal to, 5 %. The light transmittance through the combination of the splicing tape and the leader tape shall be 55% minimum.

The method for measuring light transmittance is given in annex A.

Copyright International Organization for Standardization
Provided by IHS under license with ISO
No reproduction or networking permitted without license from IHS Not for Resale

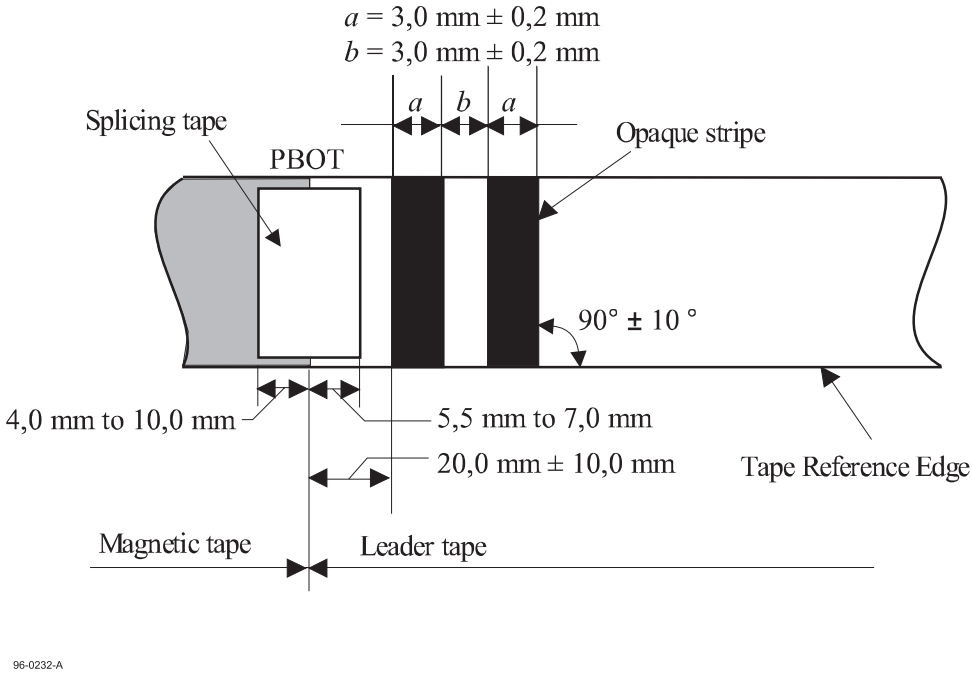

Figure 27 - Leader tape at PBOT

10 Magnetic recording characteristics

The magnetic recording characteristics shall be defined by the testing requirements given below.

When performing these tests, the output or resultant signal shall be measured on a read-while-write pass for both a tape calibrated to the Master Standard Reference Tape and the tape under test, on the same equipment.

The following conditions shall apply to the testing of all magnetic recording characteristics, unless otherwise stated.

tape condition : a.c. erased to a level of less than 0,1 % of the Average Signal Amplitude at 914,5 ftpmm.

diameter of scanner : 40,00 mm $^{+\ 0,01\ mm}_{-\ 0,00\ mm}$

rotational speed of scanner: 5 506,9 rpm ± 0,5 rpm

tape speed : 23,7 mm/s ± 0,5 mm/s

tape tension : 0,10 N ± 0,02 N, measured at the input to the scanner

test tracks : negative azimuth tracks (see 13.9 and figure 34)

write gap length : 0,23 µm ± 0,05 µm

recording current : Test Recording Current

recording waveform : square wave

read track width : in the range of 8 µm to 16 µm

write track width : equal to, or greater than, the read track width but 24 µm max.

read head setting : during a read-while-write pass, all of the read head track is within the boundaries of the written track

read output level : taken at the appropriate fundamental frequency only

10.1 Typical Field

The Typical Field shall be between 89 % and 112 % of the Reference Field.

--`,,```,,,,````-`-`,,`,,`,`,,`---
Copyright International Organization for Standardization
Provided by IHS under license with ISO
No reproduction or networking permitted without license from IHS
Not for Resale

Traceability to the Reference Field is provided by the calibration factor supplied with each Secondary Standard Reference Tape.

10.2 Signal amplitude

The Average Signal Amplitude at the physical recording density of

3 658,1 ftpmm shall be between 89 % and 141 % of that for the Master Standard Reference Tape.

Traceability to the Average Signal Amplitudes of the Master Standard Reference Tape is provided by the calibration factors supplied with each Secondary Standard Reference Tape.

10.3 Resolution

The ratio of the Average Signal Amplitude at the physical recording density of 3 658,1 ftpmm to that at the physical recording density of 914,5 ftpmm shall be between 89 % and 112 % of the same ratio for the Master Standard Reference Tape.

Traceability to the resolution for the Master Standard Reference Tape is provided by the calibration factors supplied with each Secondary Standard Reference Tape.

10.4 Overwrite

Overwrite is the ratio of the Average Signal Amplitude of the residual of a low density recording after overwriting at a higher density to the Average Signal Amplitude of the original low density recording.

Traceability to the overwrite ratios for the Master Standard Reference Tape is provided by the calibration factors supplied with each Secondary Standard Reference Tape.

Procedure

- a.c. erase the tape.
- Record at the physical density of 914,5 ftpmm and measure the Average Signal Amplitude.
- Overwrite at the physical recording density of 3 658,1 ftpmm and measure the Average Signal Amplitude of the residual 914,5 ftpmm signal.
- Repeat for the Secondary Standard Reference Tape.

Requirements

$$\text{The ratio } \frac{\text{Residual Average Signal Amplitude at 914,5 ftpmm after overwriting}}{\text{Average Signal Amplitude of the original recording at 914,5 ftpmm}}$$

shall be less than 119 % of the same ratio for the Master Standard Reference Tape.

10.5 Ease of erasure

When a tape has been recorded at 914,5 ftpmm with the Test Recording Current and then passed through a longitudinal steady erasing field of 240 000 A/m, any remaining signal shall not exceed 3 % of the SRA for that density. The erasing field shall be reasonably uniform, for example, the field in the middle of a solenoid. This measurement shall be made with a band pass filter passing at least the first three harmonics.

10.6 Tape quality

10.6.1 Missing pulses

A missing pulse is a loss of read signal amplitude. A missing pulse exists when the base-to-peak read signal is 50 %, or less, of half the Average Signal Amplitude for the recording density of 1 829,0 ftpmm on the same tape.

10.6.2 Missing pulse zone

A missing pulse zone shall commence with a missing pulse and end when 5 consecutive flux transitions, which are not missing pulses, have been detected or when a length of 0,317 mm of track has been measured. If missing pulses continue for a distance exceeding 0,317 mm, a further missing pulse zone shall commence.

A missing pulse zone does not continue from one track to the next.

The missing pulse zone rate shall be less than one in $2,3 \times 10^5$ flux transitions and applies to both positive and negative azimuth tracks.

Copyright International Organization for Standardization
Provided by IHS under license with ISO
No reproduction or networking permitted without license from IHS Not for Resale

10.7 Signal-to-Noise Ratio (SNR)

The Signal-to-Noise Ratio is the average rms read signal amplitude divided by the average integrated rms noise amplitude, and expressed in decibels.

$$SNR = 20 \log \frac{\text{Average rms read signal amplitude}}{\text{Average integrated rms noise amplitude}} \text{ dB}$$

Requirement

The SNR for the tape under test (SNR_{tape}) shall be better than -1 dB relative to the SNR for the Master Standard Reference Tape (SNR_{MSRT}) when measured according to the procedure defined in annex B.

Traceability to the (SNR_{MSRT}) is provided by the calibration factor supplied with each Secondary Standard Reference Tape.

--`,,```,,,,````-`-`,,`,,`,`,,`---

Copyright International Organization for Standardization
Provided by IHS under license with ISO
No reproduction or networking permitted without license from IHS
Not for Resale

Section 4 - Requirements for an interchanged tape

11 Format

11.1 General

Data to be recorded is sent from a host computer to the tape sub-system. The tape sub-system combines this data with additional information before recording onto the tape. The additional information includes a definition of the relationship of the host data, in the form of Logical Records of variable length, to a Frame of fixed length and to a Information Block of fixed length. The host data, when recorded, is identified as being compressed or uncompressed by the tape sub-system.

The host data with the additional information shall be recorded on helical tracks on a tape. A Frame is a pair of adjacent tracks with azimuths of opposite polarity, in which the track with the positive azimuth precedes that with the negative azimuth. Each track shall consist of a preamble zone, a data zone and a postamble zone. A data zone shall consist of eight Information Blocks. Each Information Block shall consist of 24 Sync Blocks (see figure 28).

The data received from the host shall be allocated to an Information Matrix. The Information Matrix shall consist of host data with additional information and error detecting and correcting code bytes. The contents of one Information Matrix shall be divided into 24 Sync Blocks. Each Sync Block shall consist of a part of Information Matrix and additional header. The 24 Sync Blocks shall be a Information Block.

In the following description, all operations on the data received from the host computer, including the use of error detecting and correcting codes, are described. The method of recording on the tape and the tape layout itself are also described. However, because of the inherent characteristics of this format, where required, advance reference to the tape layout will also be made in the course of the description of the operations on the data.

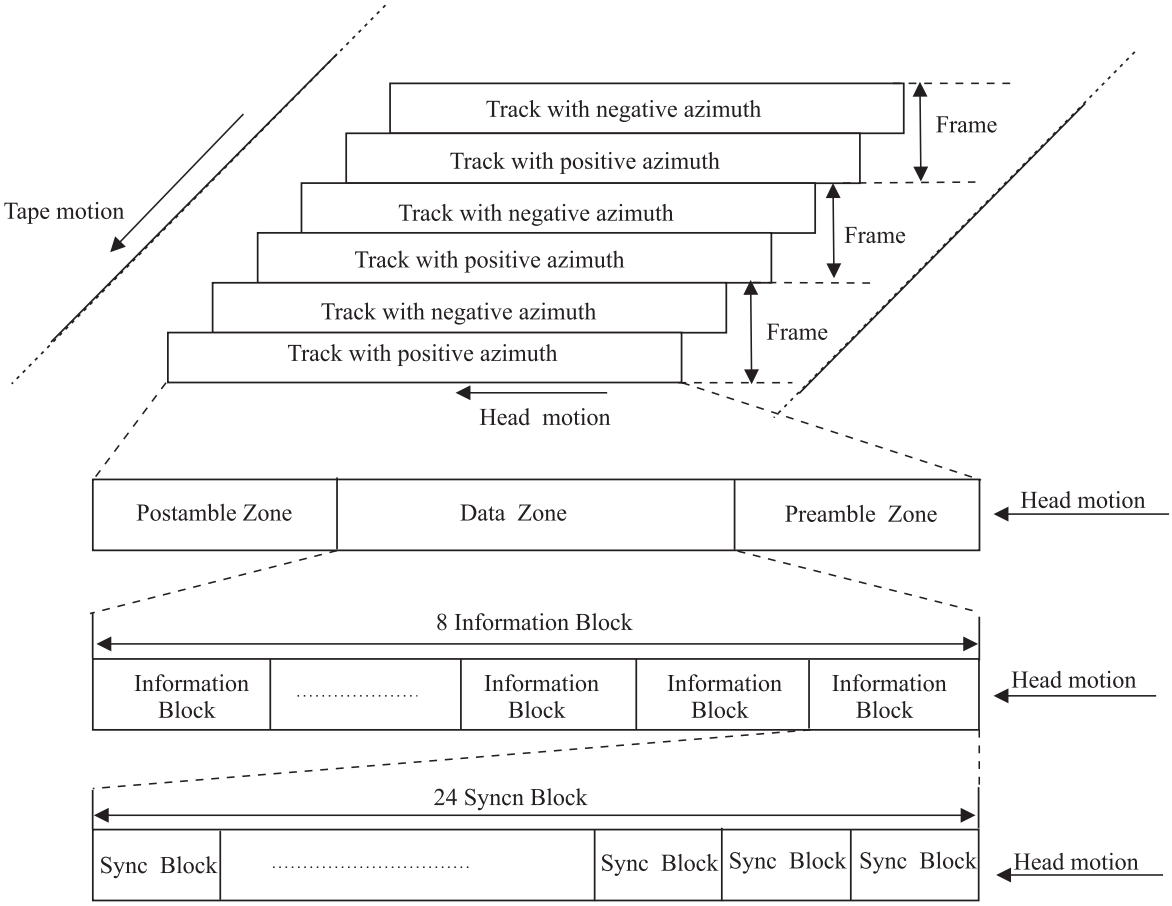

Figure 28 - Contents of a Frame

Copyright International Organization for Standardization
Provided by IHS under license with ISO
No reproduction or networking permitted without license from IHS
Not for Resale

11.2 Information Matrix

The data received from the host shall be allocated to a two dimensional array called an Information Matrix.

The Information Matrix shall be a 56-column by 48-row array containing 2 688 cells. Each cell is identified by its column and row numbers and contains a byte.

When complete, an Information Matrix shall contain:

Search Information	21 bytes
ID Information	29 bytes
Data bytes	2 048 bytes
CRC bytes	2 bytes
C2 ECC bytes	300 bytes
C1 ECC bytes	288 bytes
Total :	2 688 bytes

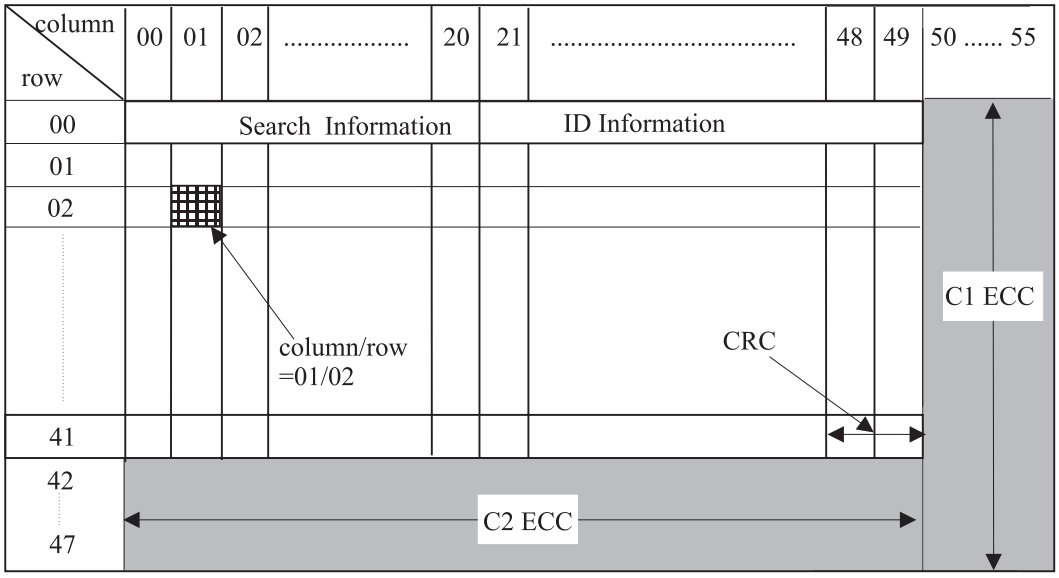

Figure 29 - Information Matrix

11.2.1 Loading the Information Matrix

Cells are identified by column and row in the following form: 00/00 to 55/47. All additions in the calculations of CRC bytes and ECC bytes are Exclusive OR operations.

11.2.1.1 G1 Group

A G1 group shall consist of 21 bytes of Search Information, 29 bytes of ID Information and 2 048 Data bytes.

11.2.1.1.1 Search information

Search Information shall contain 19 information bytes and two check bytes. Byte 0 to byte 20 of Search Information shall be entered into cells 00/00 to 20/00 sequentially. In this section, byte 0 corresponds to the content of cell 00/00, and byte *n* corresponds to the content of cell (00+*n*)/00.

Search information contents are listed below and described in the clauses which follow.

- Absolute Frame Address bytes 00/00 to 02/00
- Logical Block Address bytes 03/00 to 06/00
- Logical Record Address bytes 07/00 to 10/00
- File Mark Address bytes 11/00 to 14/00
- Set Mark Address bytes 15/00 to 17/00
- Partition Identification byte 18/00
- CRC bytes 19/00 to 20/00

Copyright International Organization for Standardization
Provided by IHS under license with ISO
No reproduction or networking permitted without license from IHS Not for Resale

11.2.1.1.1.1 Absolute Frame Address

The Absolute Frame Address is a count, starting with 0, that shall be incremented by 1 for each frame recorded on this tape. Bytes 0 to 2 shall express this 24-bit count in the Search information of all Information Blocks.

Bit 0 of Byte 2 shall be the least significant bit of this 24-bit count. The Absolute Frame Address for the first Frame following the LBOT or the LBOP 0 (see 17.1.3.1) shall be 0.

The Information Block types are:

- Data Block
- ECC3 Block
- Long File Mark Block
- Short File Mark Block
- Set Mark Block
- Gap Block
- End of Data Block
- Format Block
- Data Block in System Area

11.2.1.1.1.2 Logical Block Address

The Logical Block Address is a count, starting with 0, that shall be incremented by 1 for each Data Block, Long File Mark, Short File Mark Block, Set Mark or End of Data recorded from LBOT or LBOP 0. Bytes 3 to 6 shall express this 32-bit count in the Search Information of a Data Block, ECC3 Block (if applicable), Long File Mark Block, Short File Mark Block, Set Mark Block, Gap Block or End of Data Block. Bytes 3 to 6 shall be set to ZEROs in the Search information of a Format Block or Data Block in the System Area. The content to be entered into the 4 bytes of Logical Block Address of all Block types are described in Table 1. Bit 0 of byte 6 shall be the least significant bit of this 32-bit count. This count shall not be incremented for, and shall not be changed in, a rewritten Data Block or a rewritten Short File Mark Block.

Table 1 - Logical Block Address

Information Block Type	Content
Data Block	Address of the Data Block
ECC3 Block	Address of the last Data Block that has been written prior to the ECC3 Block
Long File Mark Block	Address of the Long File Mark in which the Long File Mark Block is located
Short File Mark Block	Address of the Short File Mark Block.
Set Mark Block	Address of the Set Mark in which the Set Mark Block is located.
Gap Block	Address of the last Data Block, Long File Mark, Short File Mark or Set Mark that has been written prior to the Gap Block.
End of Data Block	Address of the End of Data in which the End of Data Block is located.
Format Block	ZEROs.
Data Block in System Area	ZEROs

11.2.1.1.1.3 Logical Record Address

The Logical Record Address is a count, starting with 0, that shall be incremented by 1 for each Logical Record, Long File Mark, Short File Mark Block or Set Mark recorded from LBOT or LBOP 0. Bytes 7 to 10 shall express this 32-bit count in the Search information of a Data Block, ECC3 Block (if applicable), Long File Mark Block, Short File Mark Block, Set Mark Block, Gap Block or End of Data Block. Bytes 7 to 10 shall be set to ZEROs in the Search information of a Format Block or Data Block in System Area. The content to be entered into the 4 bytes of Logical Record Address of all Information Block types are described in table 2. Bit 0 of byte 10 shall be the least significant bit of this 32-bit count. This count shall not be incremented for, and shall not be changed in, a rewritten Logical Record or a rewritten Short File Mark Block.

--`,,```,,,,````-`-`,,`,,`,`,,`---
Copyright International Organization for Standardization
Provided by IHS under license with ISO
No reproduction or networking permitted without license from IHS
Not for Resale

Table 2 - Logical Record Address

Information Block Type	Content
Data Block	Address of the Logical Record to which the first Data Byte 00/01 of the Block belongs.
ECC3 Block	Address of the last Logical Record that has been written prior to the ECC3 Block.
Long File Mark Block	Address of the Long File Mark in which the Long File Mark Block is located.
Short File Mark Block	Address of the Short File Mark Block.
Set Mark Block	Address of the Set Mark in which the Set Mark Block is located.
Gap Block	Address of the last Logical Record, Long File Mark, Short File Mark or Set Mark that has been written prior to the Gap Block.
End of Data Block	Address of the last Logical Record, Long File Mark, Short File Mark or Set Mark that has been written prior to the End of Data Block.
Format Block	ZEROs.
Data Block in System Area	ZEROs.

11.2.1.1.1.4 File Mark Address

The File Mark Address is a count, starting with 0, that shall be incremented by 1 for each Short File Mark Block or Long File Mark recorded from LBOT or LBOP 0. Bytes 11 to 14 shall express this 32-bit count in the Search information of a Data block, ECC3 Block (if applicable), Long File Mark Block, Short File Mark Block, Set Mark Block, Gap Block or End of Data Block. Bytes 11 to 14 shall be set to ZEROs in the Search information of a Format Block or of a Data Block in System Area. The content to be entered into the 4 bytes of File Mark Address of all Information Block types are described in Table 3. Bit 0 of byte 14 shall be the least significant bit of this 32-bit count. This count shall not be incremented for, and shall not be changed in, a rewritten Short File Mark Block.

Table 3 - File Mark Address

Information Block Type	Content
Data Block	Address of the last Long File Mark or Short File Mark that has been written prior to the Data Block.
ECC3 Block	Address of the last Long File Mark or Short File Mark that has been written prior to the ECC3 Block.
Long File Mark Block	Address of the Long File Mark in which the Long File Mark Block is located.
Short File Mark Block	Address of the Short File Mark Block.
Set Mark Block	Address of the last Long File Mark or Short File Mark that has been written prior to the Set Mark Block.
Gap Block	Address of the last Long File Mark or Short File Mark that has been written prior to the Gap Block.
End of Data Block	Address of the last Long File Mark or Short File Mark that has been written prior to the End of Data Block.
Format Block	ZEROs.
Data Block in System Area	ZEROs.

11.2.1.1.1.5 Set Mark Address

The Set Mark Address is a count, starting with 0, that shall be incremented by 1 for each Set Mark recorded from LBOT or LBOP 0. Bytes 15 to 17 shall express this 24-bit count in the Search information of a Data block, ECC3 Block (if applicable), Long File Mark Block, Short File Mark Block, Set Mark Block, Gap Block or End of Data Block. Bytes 15 to 17 shall be set to ZEROs in the Search information of a Format Block or of a Data Block in System Area. The content to be entered into the 3 bytes of Set Mark Address of all Information Block types are described in Table 4. Bit 0 of byte 17 shall be the least significant bit of this 24-bit count.

Copyright International Organization for Standardization
Provided by IHS under license with ISO
No reproduction or networking permitted without license from IHS Not for Resale

Table 4 - Set Mark Address

Information Block Type	Content
Data Block	Address of the last Set Mark that has been written prior to the Data Block.
ECC3 Block	Address of the last Set Mark that has been written prior to the ECC3 Block.
Long File Mark Block	Address of the last Set Mark that has been written prior to the Long File Mark Block.
Short File Mark Block	Address of the last Set Mark that has been written prior to the Short File Mark Block.
Set Mark Block	Address of the Set Mark in which the Set Mark Block is located.
Gap Block	Address of the last Set Mark that has been written prior to the Gap Block.
End of Data Block	Address of the last Set Mark that has been written prior to the End of Data Block.
Format Block	ZEROs.
Data Block in System Area	ZEROs.

11.2.1.1.1.6 Partition Identification

Byte 18 in the Search Information of all Information Block types shall express the Partition Identification. Bit 0 of byte 18 shall be set to ONE if the Information Block is in Partition 1. Bit 0 of byte 18 shall be set to ZERO if the Information Block is in Partition 0 or on Single Data Space tape. The other bits of this byte shall be set to ZERO.

11.2.1.1.1.7 CRC

Bytes 19 and 20 in the Search Information of all Information Block types shall be CRC bytes. The two CRC bytes shall be computed over the 19 bytes of the Search Information and entered into cells 19/00 and 20/00.

They are generated as follows:

D_k is byte k of the Search Information

where:

k = 0 to 18

$D_{k,0}$, $D_{k,1}$,..., $D_{k,7}$ denote the 8 bits of D_k,

where :

$D_{k,7}$ is the high order bit.

$$D_k(x) = \sum_{j=0}^{j=7} D_{k,j} x^j$$

$$D(x) = \sum_{k=0}^{k=18} D_k(x) x^{19-k}$$

$CH = D(x) \bmod (x+\alpha)$

where α is from GF (2^8) generated by $G(x) = x^8 + x^4 + x^3 + x^2 + 1$

$$CL = CH + \sum_{k=0}^{k=18} D_k + x^7 + x^6 + x^5 + x^4 + x^3 + x^2 + x + 1$$

where:

CH_0, CH_1,..., CH_7 are the bits of the byte 19, CH_7 being the most significant bit.

CL_0, CL_1,..., CL_7 are the bits of the byte 20, CL_7 being the most significant bit.

Copyright International Organization for Standardization
Provided by IHS under license with ISO
No reproduction or networking permitted without license from IHS Not for Resale

11.2.1.1.2 ID Information

ID Information shall contain 29 information bytes for each block type. Byte 0 to byte 28 of ID Information shall be entered into cells 21/00 to 49/00 sequentially.

In this section, Byte 0 corresponds to the contents of cell 21/00, and Byte *n* corresponds to the contents of cell (21+*n*)/00.

11.2.1.1.2.1 Data Block

Byte 0:

Bits 7 to 4 — These bits shall be used for identifying the Information Block uniquely in a Frame (see 11.4.1).

Bit 3 to 0 — These bits shall be set to ZERO.

Byte 1:

Bit 7 — This bit shall be set to ONE if a first Logical Record starts in the first data position, 00/01, in this Information Block, else it shall be set to ZERO.

Bits 6 to 0 — These bits are undefined and shall be ignored in interchange.

Byte 2:

Bits 7 to 0 — These bits are undefined and shall be ignored in interchange.

Byte 3:

This byte shall express the count of the number of times that the frame has been rewritten. Bit 0 shall be the least significant bit of this count.

Bytes 4 and 5:

Bit 7 of byte 4 — This bit shall be set to ONE if a first Logical Record of this Information Block is compressed, else it shall be set to ZERO.

Bit 6 of byte 4 — This bit shall be set to ONE if a first Logical Record is the last Logical Record of this Information Block, else it shall be set to ZERO. Further, if this Logical Record is the last Logical Record then bytes 9 to 28 are undefined and shall be ignored in interchange.

Bit 5 of byte 4 — This bit shall be set to ONE if the last byte of a first Logical Record is in this Information Block, else it shall be set to ZERO.

Bits 4 and 3 of byte 4 — These bits are undefined and shall be ignored in interchange.

Bits 2 to 0 of byte 4 and bits 7 to 0 of byte 5 — These bits shall express the 11-bit count of one less than the number of bytes within this Information Block of the first Logical Record. Bit 0 of Byte 5 shall be the least significant bit of this count. The count shall also includes CRC bytes (see Rule 1 of 11.2.1.1.3.1) if they are in this Information Block.

Bytes 6 to 8:

These bytes shall express the 24-bit count of the number of bytes of the first Logical Record before compression. Bit 0 of byte 8 shall be the least significant bit of this count. If this Logical Record is not compressed, these bits are undefined and shall be ignored in interchange.

Bytes 9 and 10:

Bit 7 of byte 9 — This bit shall be set to ONE if a second Logical Record of this Information Block is compressed, else it shall be set to ZERO.

Bit 6 of byte 9 — This bit shall be set to ONE if a second Logical Record is the last Logical Record of this Information Block, else it shall be set to ZERO. Further, if this Logical Record is the last Logical Record then bytes 14 to 28 are undefined and shall be ignored in interchange.

Bit 5 of byte 9 — This bit shall be set to ONE if the last Byte of a second Logical Record is in this Information Block, else it shall be set to ZERO.

Bits 4 and 3 of byte 9 — These bits are not specified and shall be ignored in interchange.

Copyright International Organization for Standardization
Provided by IHS under license with ISO
No reproduction or networking permitted without license from IHS
Not for Resale

Bits 2 to 0 of byte 9 and
bits 7 to 0 of byte 10 These bits shall express the 11-bit count of one less than the number of bytes within this Information Block of the second Logical Record. Bit 0 of Byte 10 shall be the least significant bit of this count. The count shall also includes CRC bytes (see Rule 1 of 11.2.1.1.3.1) if they are in this Information Block.

Bytes 11 to 13:

These bytes shall express the 24-bit count of the number of bytes of the second Logical Record before compression. Bit 0 of byte 13 shall be the least significant bit of this count. If this Logical Record is not compressed, these bits are undefined and shall be ignored in interchange.

Bytes 14 and 15:

Bit 7 of byte 14 This bit shall be set to ONE if a third Logical Record of this Information Block is compressed, else it shall be set to ZERO.

Bit 6 of byte 14 This bit shall be set to ONE if a third Logical Record is the last Logical Record of this Information Block, else it shall be set to ZERO. Further, if this Logical Record is the last Logical Record then bytes 19 to 28 are undefined and shall be ignored in interchange.

Bit 5 of byte 14 This bit shall be set to ONE if the last Byte of a third Logical Record is in this Information Block, else it shall be set to ZERO.

Bits 4 and 3 of byte 14 These bits are not specified and shall be ignored in interchange.

Bits 2 to 0 of byte 14 and
bits 7 to 0 of byte 15 These bits shall express the 11-bit count of one less than the number of bytes within this Information Block of the third Logical Record. Bit 0 of byte 15 shall be the least significant bit of this count. The count shall also includes CRC bytes (see Rule 1 of 11.2.1.1.3.1) if they are in this Information Block.

Bytes 16 to 18:

These bytes shall express the 24-bit count of the number of bytes of the third Logical Record before compression. Bit 0 of byte 18 shall be the least significant bit of this count. If this Logical Record is not compressed, these bits are undefined and shall be ignored in interchange.

Bytes 19 and 20:

Bit 7 of byte 19 This bit shall be set to ONE if a fourth Logical Record of this Information Block is compressed, else it shall be set to ZERO.

Bit 6 of byte 19 This bit shall be set to ONE if a fourth Logical Record is the last Logical Record of this Information Block, else it shall be set to ZERO. Further, if this Logical Record is the last Logical Record then bytes 24 to 28 are undefined and shall be ignored in interchange.

Bit 5 of byte 19 This bit shall be set to ONE if the last byte of a fourth Logical Record is in this Information Block, else it shall be set to ZERO.

Bits 4 and 3 of byte 19 These bits are not specified and shall be ignored in interchange.

Bits 2 to 0 of byte 19 and
bits 7 to 0 of byte 20 These bits shall express the 11-bit count of one less than the number of bytes within this Information Block of the fourth Logical Record. Bit 0 of byte 20 shall be the least significant bit of this count. The count shall also includes CRC bytes (see Rule 1 of 11.2.1.1.3.1) if they are in this Information Block.

Bytes 21 to 23:

These bytes shall express the 24-bit count of the number of bytes of the fourth Logical Record before compression. Bit 0 of byte 23 shall be the least significant bit of this count. If this Logical Record is not compressed, these bits are undefined and shall be ignored for interchange.

Bytes 24 and 25:

Bit 7 of byte 24 This bit shall be set to ONE if a fifth Logical Record of this Information Block is compressed, else it shall be set to ZERO.

Bit 6 of byte 24 This bit shall be set to ONE if a fifth Logical Record is the last Logical Record of this Information Block, else it shall be set to ZERO.

Copyright International Organization for Standardization
Provided by IHS under license with ISO
No reproduction or networking permitted without license from IHS Not for Resale

Bit 5 of byte 24 This bit shall be set to ONE if the last Byte of a fifth Logical Record is in this Information Block, else it shall be set to ZERO.

Bits 4 and 3 of byte 24 These bits are undefined and shall be ignored in interchange.

Bits 2 to 0 of byte 24 and bits 7 to 0 of byte 25 These bits shall express the 11-bit count of one less than the number of bytes within this Information Block of the fifth Logical Record. Bit 0 of byte 25 shall be the least significant bit of this count. The count shall also includes CRC bytes (see Rule 1 of 11.2.1.1.3.1) if they are in this Information Block.

Bytes 26 to 28:

These bytes shall express the 24-bit count of the number of bytes of the fifth Logical Record before compression. Bit 0 of byte 28 shall be the least significant bit of this count. If this Logical Record is not compressed, these bits are undefined and shall be ignored in interchange.

11.2.1.1.2.2 ECC3 Block

Byte 0:

Bits 7 to 4 These bits shall be used for identifying the Information Block uniquely in a Frame (see 11.4.1).

Bits 3 to 1 These bits shall be set to ZERO.

Bit 0 This bit shall be set to ONE.

Bytes 1 and 2:

These bytes are undefined and shall be ignored in interchange.

Byte 3:

This byte shall express the count of the number of times that the frame has been rewritten. Bit 0 shall be the least significant bit of this count.

Bytes 4 to 28:

These bytes are undefined and shall be ignored in interchange.

11.2.1.1.2.3 Long File Mark Block

Byte 0:

Bits 7 to 4 These bits shall be used for identifying the Information Block uniquely in a Frame (see 11.4.1).

Bit 3 This bit shall be set to ZERO.

Bit 2 This bit shall be set to ONE.

Bits 1 and 0 These bits shall be set to ZERO.

Byte 1 to Byte 28:

These bytes are undefined and shall be ignored for interchange.

11.2.1.1.2.4 Short File Mark Block

Byte 0:

Bits 7 to 4 These bits shall be used for identifying the Information Block uniquely in a Frame (see 11.4.1).

Bit 3 This bit shall be set to ZERO.

Bit 2 This bit shall be set to ONE.

Bit 1 This bit shall be set to ZERO.

Bit 0 This bit shall be set to ONE.

Bytes 1 and 2:

These bytes are undefined and shall be ignored in interchange.

--`,,```,,,,````-`-`,,`,,`,`,,`---

Copyright International Organization for Standardization
Provided by IHS under license with ISO
No reproduction or networking permitted without license from IHS Not for Resale

Byte 3:

This byte shall express the count of the number of times that the frame has been rewritten. Bit 0 shall be the least significant bit of this count.

Bytes 4 to 28:

These bytes are undefined and shall be ignored in interchange.

11.2.1.1.2.5 Set Mark Block

Byte 0:

Bits 7 to 4	These bits shall be used for identifying the Information Block uniquely in a Frame (see 11.4.1).
Bit 3	This bit shall be set to ZERO.
Bit 2	This bit shall be set to ONE.
Bit 1	This bit shall be set to ONE.
Bit 0	This bit shall be set to ZERO.

Byte 1 to Byte 28:

These bytes are undefined and shall be ignored in interchange.

11.2.1.1.2.6 Gap Block

Byte 0:

Bits 7 to 4	These bits shall be used for identifying the Information Block uniquely in a Frame (see 11.4.1).
Bit 3	This bit shall be set to ONE.
Bits 2 to 0	These bits shall be set to ZERO.

Bytes 1 and 2:

These bytes are undefined and shall be ignored in interchange.

Byte 3:

This byte shall express the count of the number of times that the frame has been rewritten. Bit 0 shall be the least significant bit of this count.

Bytes 4 to 28:

These bytes are undefined and shall be ignored in interchange.

11.2.1.1.2.7 End of Data Block

Byte 0:

Bits 7 to 4	These bits shall be used for identifying the Information Block uniquely in a Frame (see 11.4.1).
Bits 3 to 0	These bits shall be set to ONE.

Byte 1 to Byte 28:

These bytes are undefined and shall be ignored in interchange.

11.2.1.1.2.8 Format Block

Byte 0:

Bits 7 to 4	These bits shall be used for identifying the Information Block uniquely in a Frame (see 11.4.1).
Bits 3 to 2	These bits shall be set to ZERO.
Bit 1	This bit shall be set to ONE.
Bit 0	This bit shall be set to ZERO.

Byte 1:

Bit 7	This bit shall be set to ONE if the optional ECC3 is enabled in the partition, otherwise it shall be set to ZERO.

Copyright International Organization for Standardization
Provided by IHS under license with ISO
No reproduction or networking permitted without license from IHS Not for Resale

Bit 6	This bit shall be set to ZERO if updating of a System Log is enabled in the Partition, otherwise it shall be set to ONE.
Bit 5	This bit shall be set to ZERO if Rewrite is enabled in the Partition, otherwise it shall be set to ONE.
Bit 4	This bit shall be set to ZERO if Read Retry is enabled in the Partition, otherwise it shall be set to ONE.
Bits 3 to 0	These bits shall express the Data Format ID, which is an identifier specifying which data format is being used on the tape, and shall be set to ZEROs in this International Standard.

Byte 2:

This byte shall express the identification of the compression algorithm used in the Partition according to ISO/IEC 11576.

Bytes 3 to 28 :

These bytes are undefined and shall be ignored in interchange.

11.2.1.1.2.9 Data Block in System Area

Byte 0:

Bits 7 to 4	These bits shall be used for identifying the Information Block uniquely in a Frame (see 11.4.1).
Bits 3 to 0	These bits shall be set to ZERO.

Byte 1 to Byte 28 :

These bits are undefined and shall be ignored for interchange.

11.2.1.1.3 Data bytes

11.2.1.1.3.1 Data Block

Data bytes from the host shall be entered sequentially by row starting with 00/01 to 49/01, continuing until 47/41.

This sequence shall be altered by the following 4 rules:

– **Rule 1**: When a Logical Record ends in this Information Matrix, two CRC bytes shall be calculated for the User Data of the Logical Record and sequentially entered into the cells following the last byte of the Logical Record. As described in 11.2.1.1.1.3, the first Logical Record on the tape and the first Logical Record in a partition is Logical Record 0. The first byte of a Logical Record is Byte 0. The two CRC bytes are computed as follows:

where:

D_k	shall denote the kth byte of the Logical Record
$D_{k,j}$	shall denote the jth bit of the kth byte
n	shall denote the number of User Data bytes in the Logical Record

then

$$D_k(x) = \sum_{j=0}^{j=7} D_{k,j} x^j$$

$$D(x) = \sum_{k=0}^{k=n-1} D_k(x) x^{8(n+1-k)}$$

$$G_{\mathrm{CRC}}(x) = x^{16} + x^{12} + x^5 + 1$$

$$C(x) = D(x) \bmod G_{\mathrm{CRC}}(x)$$

$$C(x) + x^{15} + x^{13} + x^{11} + x^9 + x^6 + x^4 + x^2 + 1 = \sum_{j=0}^{j=7} (CH_j x^j + CL_j x^{j+8})$$

where CH_0, CH_1, ..., CH_7 are the bits of the first CRC byte (CH) and CH_7 is the most significant bit.

Similarly CL_0, CL_1, ..., CL_7 are the bits of the second CRC byte (CL) and CL_7 is the most significant bit.

Copyright International Organization for Standardization
Provided by IHS under license with ISO
No reproduction or networking permitted without license from IHS Not for Resale

– **Rule 2**: When the User Data bytes from the host comprise all or part of more than five Logical Records (including two CRC bytes described in Rule 1) in this Information Matrix, a five-byte group shall be entered into the five cells preceding the first User Data byte of each of the sixth and subsequent Logical Records of this Information Matrix. The contents of each five-byte group shall be related to the Logical Record which follows the five-byte group.

  Bytes 0 and 1:

  Bit 7 of byte 0: This bit shall be set to ONE if this Logical Record is compressed, else it shall be set to ZERO.

  Bit 6 of byte 0: This bit shall be set to ONE if this Logical Record is the last Logical Record in this Information Matrix, else it shall be set to ZERO.

  Bit 5 of byte 0: This bit shall be set to ONE if the last Byte of this Logical Record is in this Information Matrix, else it shall be set to ZERO.

  Bits 4 and 3 of byte 0: These bits are not specified by this International Standard and shall be ignored in interchange.

  Bits 2 to 0 of byte 0 and bits 7 to 0 of byte 1 : These bits shall express the 11-bit count of the number of bytes within this Information Matrix of this Logical Record. Bit 0 of byte 1 shall be the least significant bit of this count. The count shall also include CRC bytes (see Rule 1) if they are in this Information Matrix.

  Bytes 2 to 4:

  These bytes shall express the 24-bit count of the number of bytes of this Logical Record before compression. Bit 0 of byte 4 shall be the least significant bit of this count. If this Logical Record is not compressed, these bits are undefined by this International Standard and shall be ignored in interchange.

– **Rule 3**: If fifth or subsequent Logical Record (including two CRC bytes described in Rule 1) ends in this Information Matrix and a number of remaining Data bytes is less than six, next Logical Record shall start in next Information Matrix and the remaining Data bytes shall be padded with ZEROs.

– **Rule 4**: When the number of Data bytes is less than 2,048 the remaining bytes are set to all ZEROs.

11.2.1.1.3.2 Optional ECC3 Block

ECC3, if present, is applicable to Frames in the partition in which bit 7 of byte 1 of the ID Information of Format Blocks is ONE. In the Partition in which ECC3 is applicable, ECC3 bytes shall be entered into Data bytes of Information Blocks having the number 14 or 15 as the Information Block Number (described in 11.4.1) in Data Frames.

ECC3 shall be a $GF(2^8)$ Reed-Solomon Code (16, 14, 3). Calculation in a $GF(2^8)$ shall be defined by:

$G(x) = x^8 + x^4 + x^3 + x^2 + 1$

A primitive element α in $GF(2^8)$ is 00000010.

The ECC3 bytes shall satisfy:

$$H_R \times V_R = 0$$

$$H_R = \begin{bmatrix} 1 & 1 & 1 & \dots & 1 & 1 & 1 \\ \alpha^{15} & \alpha^{14} & \alpha^{13} & \dots & \alpha^2 & \alpha & 1 \end{bmatrix}$$

$$V_R = \begin{bmatrix} D_{n,0} \\ D_{n,1} \\ D_{n,2} \\ \dots \\ D_{n,12} \\ D_{n,13} \\ R_{n,14} \\ R_{n,15} \end{bmatrix}$$

Copyright International Organization for Standardization
Provided by IHS under license with ISO
No reproduction or networking permitted without license from IHS Not for Resale

$D_{n,x}$ and $R_{n,y}$ is the byte in column c and row r in the Information Block which has x as the Information Block Number in a Frame, or the Information Block which has y as Information Block Number in a Frame

where:

n = 50 to 2 097

$n = (c+50\ r)$

c = 0 to 49

r = 1 to 41

x and y are the Information Block numbers described in 11.4.1

x = 0 to 13
y = 14 or 15

$R_{n,y}$ is the ECC3 byte.

11.2.1.1.3.3 Long File Mark Block

Data bytes in Long File Mark Block are undefined and shall be ignored in interchange.

11.2.1.1.3.4 Short File Mark Block

Data bytes in Short File Mark Block are undefined and shall be ignored in interchange.

11.2.1.1.3.5 Set Mark Block

Data bytes in Set Mark Block are undefined and shall be ignored in interchange.

11.2.1.1.3.6 Gap Block

Data bytes in Gap Block are undefined and shall be ignored in interchange.

11.2.1.1.3.7 End of Data Block

Data bytes in End of Data Block are undefined and shall be ignored in interchange.

11.2.1.1.3.8 Format Block

Data bytes in Format Block are undefined and shall be ignored in interchange.

11.2.1.1.3.9 Data Block in the System Area

Data bytes in a Data Block in the System Area are not specified by this International Standard and shall be ignored in interchange. The data for this Block is generated by the tape system (see annex G).

11.2.1.2 G2 Group

A G2 group shall consist of a G1 group with the addition of two CRC bytes.

The two CRC bytes shall be computed over the 2 098 bytes of the G1 group and entered into cells 48/41 and 49/41.

They are generated as follows:

D_k is the byte in column c and row r

where:

k = 0 to 2 097

$k = (c + 50\ r)$

c = 0 to 49

r = 0 to 41

$D_{k,0}$, $D_{k,1}$ ...., $D_{k,7}$ denote the 8 bits of D_k, where $D_{k,7}$ is the high order bit.

$$D_k(x) = \sum_{j=0}^{j=7} D_{k,j}\, x^j$$

Copyright International Organization for Standardization
Provided by IHS under license with ISO
No reproduction or networking permitted without license from IHS Not for Resale

$$D(x) = \sum_{k=0}^{k=2\,097} D_k(x) x^{8(2\,097-k)}$$

$$G_{CRC}(x) = x^{16} + x^{12} + x^5 + 1$$

$$C(x) = D(x) \bmod G_{CRC}(x)$$

$$C(x) + x^{15} + x^{13} + x^{11} + x^9 + x^6 + x^4 + x^2 + 1 = \sum_{j=0}^{j=7} (CH_j x^{j+8} + CL_j x^j)$$

where:

CH_0, CH_1, ..., CH_7 are the bits of the cell 48/41, CH_7 being the most significant bit.

CL_0, CL_1, ..., CL_7 are the bits of the cell 49/41, CL_7 being the most significant bit.

11.2.1.3 G3 Group

A G3 group shall consist of a G2 group with the addition of the Error Correcting Code (ECC) bytes. The ECC bytes are obtained from two error detection and correction codes C1 and C2 computed over the bytes of a Group 2.

The C2 ECC bytes shall be computed for the byte position with column numbers in the range 0 to 49 in each row having a row number in the range 42 to 47 from the bytes with the same column number in all the other rows.

The C1 ECC bytes shall then be computed for byte positions with column numbers in the range 50 to 55 in all rows from all the other bytes in the same rows. In rows with a row number in the range 42 to 47, these C1 ECC bytes shall be computed from the C2 ECC bytes previously computed.

These two computations yield the bytes for the byte positions indicated by the shaded portions of the array of figure 29.

- C1 shall be a $GF(2^8)$ Reed-Solomon Code (56, 50, 7)
- C2 shall be a $GF(2^8)$ Reed-Solomon Code (48, 42, 7)

Calculation in a $GF(2^8)$ shall be defined by:

$$G(x) = x^8 + x^4 + x^3 + x^2 + 1$$

A primitive element α in $GF(2^8)$ is 00000010.

The C1 and C2 ECC bytes shall satisfy:

$$H_P \times V_P = 0$$

$$H_Q \times V_Q = 0$$

The generator polynomials shall be:

$$G_P(x) = \prod_{i=0}^{i=5} (x - \alpha^i)$$

$$G_Q(x) = \prod_{i=0}^{i=5} (x - \alpha^i)$$

$$H_P = \begin{bmatrix} 1 & 1 & 1 & \dots & 1 & 1 & 1 \\ \alpha^{55} & \alpha^{54} & \alpha^{53} & \dots & \alpha^2 & \alpha & 1 \\ \alpha^{110} & \alpha^{108} & \alpha^{106} & \dots & \alpha^4 & \alpha^2 & 1 \\ \alpha^{165} & \alpha^{162} & \alpha^{159} & \dots & \alpha^6 & \alpha^3 & 1 \\ \alpha^{220} & \alpha^{216} & \alpha^{212} & \dots & \alpha^8 & \alpha^4 & 1 \\ \alpha^{20} & \alpha^{15} & \alpha^{10} & \dots & \alpha^{10} & \alpha^5 & 1 \end{bmatrix}$$

Note - The last row of H_P may be equivalently written as [α^{275} α^{270} α^{265} … α^{10} α^5 1]. The identity $\alpha^{255} = 1$ has been used to simplify the matrix elements.

Copyright International Organization for Standardization
Provided by IHS under license with ISO
No reproduction or networking permitted without license from IHS Not for Resale

$$H_Q = \begin{bmatrix} 1 & 1 & 1 & \dots & 1 & 1 & 1 \\ \alpha^{47} & \alpha^{46} & \alpha^{45} & \dots & \alpha^{2} & \alpha & 1 \\ \alpha^{94} & \alpha^{92} & \alpha^{90} & \dots & \alpha^{4} & \alpha^{2} & 1 \\ \alpha^{141} & \alpha^{138} & \alpha^{135} & \dots & \alpha^{6} & \alpha^{3} & 1 \\ \alpha^{188} & \alpha^{184} & \alpha^{180} & \dots & \alpha^{8} & \alpha^{4} & 1 \\ \alpha^{235} & \alpha^{230} & \alpha^{225} & \dots & \alpha^{10} & \alpha^{5} & 1 \end{bmatrix}$$

$$V_P = \begin{bmatrix} D_{0,k} \\ D_{1,k} \\ D_{2,k} \\ D_{3,k} \\ \dots \\ \dots \\ D_{47,k} \\ D_{48,k} \\ D_{49,k} \\ P_{50,k} \\ P_{51,k} \\ P_{52,k} \\ P_{53,k} \\ P_{54,k} \\ P_{55,k} \end{bmatrix} \quad V_Q = \begin{bmatrix} D_{m,0} \\ D_{m,1} \\ D_{m,2} \\ D_{m,3} \\ \dots \\ \dots \\ D_{m,39} \\ D_{m,40} \\ D_{m,41} \\ Q_{m,42} \\ Q_{m,43} \\ Q_{m,44} \\ Q_{m,45} \\ Q_{m,46} \\ Q_{m,47} \end{bmatrix}$$

where

$D_{i,j}$ = content of cell i / j

$P_{i,j}$ = C1 ECC bytes

$Q_{i,j}$ = C2 ECC bytes

i = column number

j = row number

For C1: k = 0, 1, ..., 47

if k = 42, 43, ..., 47, then $D_{i,j}$ in V_p is read as $Q_{i,j}$

For C2: m = 0, 1, ..., 55

11.3 Sync Block

Sync Block Data shall be transformed into a 115-byte Sync Block by prefixing a 3-byte Sync Block Header (see figure 30).

11.3.1 Sync Block Data

A Sync Block Data shall consist of 112 cells of consecutive 2 rows, even and odd, of Information Matrix, which are shown as figure 29 and 30.

11.3.2 Sync Block Header

Sync Block Header shall be consist of 3 bytes as follows

- Byte 0 : Sync Block ID W1
- Byte 1 : Sync Block ID W2
- Byte 2 : Sync Block ID Parity

11.3.2.1 Sync Block ID W1

These bits shall express in binary notation the Sync Block number described in 11.4.2. Bit 0 of this byte shall be the least significant bit.

--`,,```,,,,````-`-`,,`,,`,`,,`---

Copyright International Organization for Standardization
Provided by IHS under license with ISO
No reproduction or networking permitted without license from IHS
Not for Resale

11.3.2.2 Sync Block ID W2

Bits 7 to 4 : These bits shall express in binary notation the Absolute Frame Address mod 16. Bit 4 shall be the least significant bit.

Bits 3 to 0 : These bits shall express an Area ID.

- They shall be set to 0000 if the Sync Block is in a Data Area.
- They shall be set to 0010 if the Sync Block is in a Reference Area.
- They shall be set to 1100 if the Sync Block is in a System Area.
- They shall be set to 1111 if the Sync Block is in a End of Data Area.

11.3.2.3 Sync Block ID Parity

Bit *n* of Sync Block ID Parity shall be Exclusive OR of Bit *n* of Sync Block ID W1 and Bit *n* of Sync Block ID W2 (*n*:0 to 7).

Bit							
7	6	5	4	3	2	1	0

ID W1	Sync Block Number in the track	
ID W2	Absolute Frame Address mod 16	Area ID
ID Parity	Exclusive OR of W1 and W2	
Sync	Byte with column number 00 and even row number r	
	Byte with column number 01 and even row number r	
	…	
	Byte with column number 54 and even row number r	
	Byte with column number 55 and even row number *r*	
	Byte with column number 00 and odd row number *r*+1	
	Byte with column number 01 and odd row number *r*+1	
	…	
	Byte with column number 54 and odd row number *r*+1	
	Byte with column number 55 and odd row number *r*+1	

Figure 30 - Sync Block

11.3.3 Sync Block Header in Preamble Zone

The Preamble Zone in each track includes one Sync Block Header. Sync Block ID W1 of the Sync Block Header shall be set to (FF) in binary notation. Bit 0 of the byte shall be the least significant bit. Sync Block ID W2 shall be used in a manner identical with that of Sync Blocks in the Data Zone. The position of the recorded Sync Block Header in the Preamble Zone and the contents of Preamble Zone are described in clause 14.2.

11.4 Data Zone

A Data Zone of a Track shall consist of eight Information Blocks. Each Information Block shall consist of 24 Sync Blocks into which an Information Matrix is divided. Each Information Block shall be uniquely identified in a Frame by bits 7 to 4 of byte 0 of ID Information of the Information Block. Each Sync Block shall be uniquely identified in a track by Sync Block ID W1.

11.4.1 Identification and arrangement of Information Blocks in the Data Zone of a Frame

Bits 7 to 4 of byte 0 of the ID Information of an Information Block shall express in binary notation the Information Block Number in the Data Zone of a frame in the range of 0 to 15. Bit 4 of byte 0 is the least significant bit. In a frame, the Information Block having the smallest Logical Block Address shall have the smallest Information Block Number.

An arrangement of Information Blocks in a Frame shall be as shown in figure 31 if the Frame is not a rewritten Frame or if the Frame has been rewritten an even number of times. The numbers in figure 31 express this Information Block number.

An arrangement of Information Blocks in a Frame shall be as shown in figure 32 if the Frame has been rewritten an odd number of times. The numbers in figure 32 express this Information Block number.

Copyright International Organization for Standardization
Provided by IHS under license with ISO
No reproduction or networking permitted without license from IHS Not for Resale

11.4.2 Identification and arrangement of Sync Blocks in Data Zone of a Track

Sync Block ID W1 of a Sync Block shall express the Sync Block number in a Track in binary notation in the range 0 to 191. Bit 0 is the least significant bit. Sync Block numbers are incremented sequentially starting with 0. An arrangement of Sync Blocks shall be as shown in figure 33. The numbers in figure 33 express this Sync Block number.

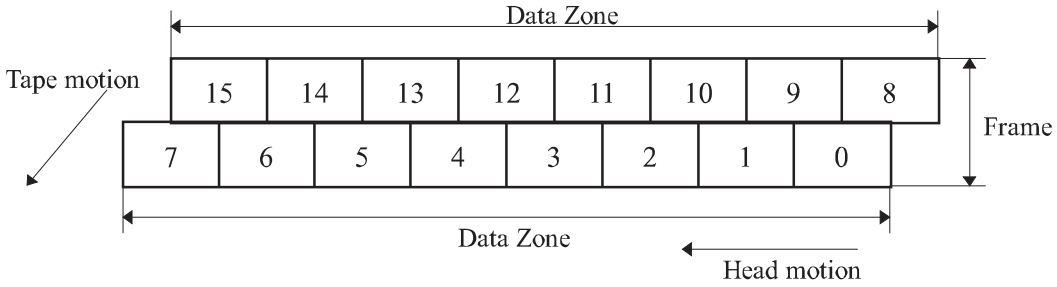

96-0235-A

Figure 31 - Arrangement of Information Blocks in original or even times rewritten Frame

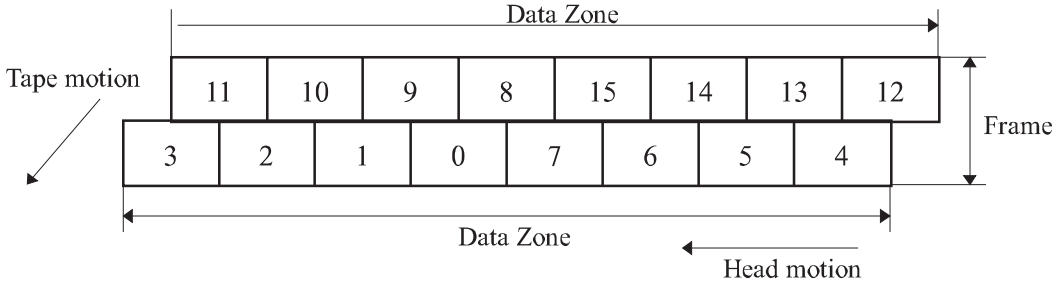

Figure 32 - Arrangement of Information Blocks in odd times rewritten Frame

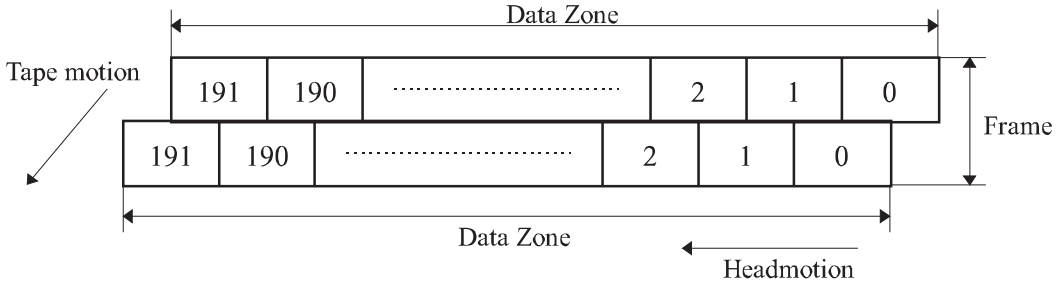

96-0237-A

Figure 33 - Arrangement of Sync Blocks in a Frame

12 Method of recording

The method of recording shall be

- a ONE is represented by a flux transition at the centre of a bit cell;
- a ZERO is represented by the absence of a flux transition in the bit cell.

12.1 Physical recording density

The nominal maximum physical recording density is 3 658,1 ftpmm. The resulting nominal bit cell length is 0,273 36 µm.

12.2 Long-term average bit cell length

The long-term average bit cell length for each track shall be measured over its 192 recorded Sync Blocks in the Data Zone (see 14.1). It shall be within 0,2% of the nominal bit cell length.

12.3 Short-term average bit cell length

The short-term average bit cell length, referred to a particular bit cell, shall be the average of the preceding 30 bit cells. It shall be within 0,35% of the long-term average bit cell length for the preceding track of the same azimuth.

--`,,```,,,,````-`-`,,`,,`,`,,`---
Copyright International Organization for Standardization
Provided by IHS under license with ISO
No reproduction or networking permitted without license from IHS
Not for Resale

12.4 Rate of change

The short-term average bit cell length shall not change at a rate greater than 0,05% per bit cell.

12.5 Bit shift

The maximum displacement of any ONEs zero crossing, exclusive of missing pulses, shall not deviate by more than 20% from the expected nominal position as defined by the short-term average bit cell length. See annex D for the method of measurement.

12.6 Read signal amplitude

The Average Signal Amplitude at the physical recording density of 3 658,1 ftpmm of an interchange cartridge shall be between 89% and 141% of the Standard Reference Amplitude.

12.7 Recording current

The recording current shall be between 94% and 106% of the Test Recording Current for recorded frequencies associated with a recording density of 914,5 ftpmm, 1 829,0 ftpmm and 3 658,1 ftpmm.

13 Track geometry

13.1 Track configuration

The helical track pattern is formed by the relationship between the direction of tape motion and the axis of rotation of a pair of heads, one of which has a positive azimuth angle and the other a negative azimuth angle. The direction of recording is away from the Tape Reference Edge. The track configuration is shown in figure 34.

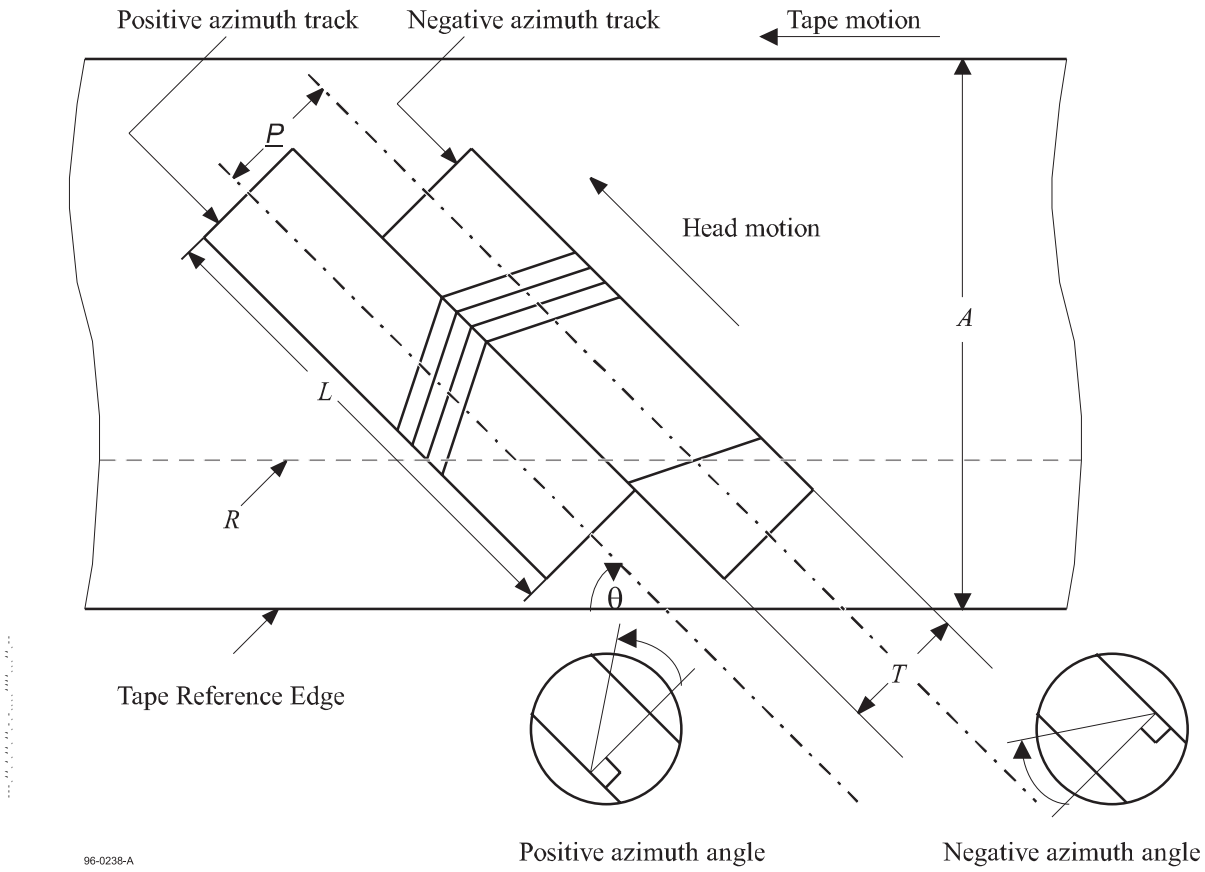

A : Tape width
L : Track length
P : Track pitch
T : Track width
R : Data Zone reference line
θ : Track angle

Figure 34 - Track configuration (view on recording surface)

Copyright International Organization for Standardization
Provided by IHS under license with ISO
No reproduction or networking permitted without license from IHS
Not for Resale

13.2 Average track pitch

The average track pitch, taken over any group of 30 consecutive tracks, shall be 11,00 µm ± 0,25 µm.

13.3 Variations of the track pitch

The change of track pitch between successive track pitches shall not exceed 2,0 %, excluding the effect of an appending operation (see 16.5.5).

13.4 Track width

The nominal track width is 11,000 µm.

The measured track width shall be 11,0 µm ± 1,5 µm.

13.5 Track angle

The nominal angle of each track with respect to the Tape Reference Edge shall be $4^{o}53'42,1''$.

13.6 Track edge linearity

The linearity of the leading edge of each track shall be within 5 µm, when measured according to annex E.

13.7 Track length

The length of each track shall be 62,163 mm ± 0,124 mm.

13.8 Data Zone reference

The nominal data zone reference point of the tape is 1,869 mm from the Tape Reference Edge.

13.9 Azimuth angles

The positive azimuth angle shall be $20^{o}00'36,1'' \pm 15'00,0''$.

The negative azimuth angle shall be $9^{o}59'23,9'' \pm 15'00,0''$.

14 Recording pattern

Each 8-bit byte of the Sync Blocks shall be represented on the tape by a 10-bit pattern. Annex C specifies for each 8-bit byte the 10-bit pattern to be recorded. The bits of the 10-bit pattern are called Channel bits.

14.1 Recorded Sync Block

A Recorded Sync Block shall consist of 1 160 Channel bits representing the 115 8-bit bytes of a Sync Block preceded by a Sync field of 10 Channel bits with one of the following patterns:

a) 0100010001
b) 1100010001

Pattern a) shall be used for Q' = -1, DC = 0, Q = 1; pattern b) for Q' = 1, DC = 0, Q = 1 (see annex C). Either pattern may be used when there is no preceding pattern, and hence no value of Q'. See C.1 for the order of recording.

14.2 Preamble Zone

A Preamble Zone shall be recorded with 372 10-bit patterns, which consist of 256 10-bit patterns of 1111111111, Sync field, Sync Block Header, and 112 10-bit patterns of 1111111111. See figure 35 for the structure of the Preamble Zone.

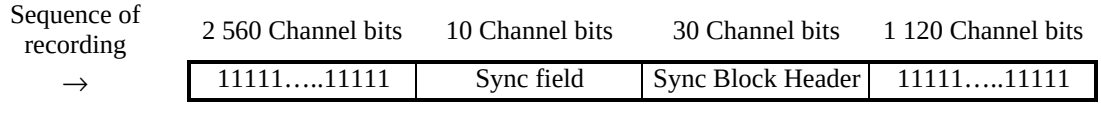

Figure 35 - Structure of Preamble Zone

14.3 Postamble Zone

A Postamble zone shall be recorded with 96 instances of the 10-bit pattern of 1111111111.

Copyright International Organization for Standardization
Provided by IHS under license with ISO
No reproduction or networking permitted without license from IHS
Not for Resale

15 Format of a track

15.1 Track capacity

Each track shall consist of Preamble Zone, Data Zone and Postamble Zone, shown in table 5.

Table 5 - Format of a track

Sequence of recording ↓	Zone	Contents	Number of 10-bit patterns	
	Preamble Zone	Preamble pattern	372	↑
	Data Zone	Recorded Sync Blocks	22 272	22 740
	Postamble Zone	Postamble pattern	96	↓

15.2 Positioning accuracy

The positioning reference point is the start of the first Sync Block of a Data Zone, the Data Zone Reference. In the direction perpendicular to the Tape Reference Edge, the Data Zone Reference shall be 1,869 mm ± 0,018 mm. The position of the start of the first Sync Block is that of its first bit cell on the centreline of the track. This requirement shall not apply at an append point.

15.3 Tracking scheme

This format does not include any aids specifically designed to assist a reading drive in maintaining tracking. However, the specifications of clause 15.2 limit the extent of the conditions that it must handle correctly.

16 Layout of a Single Data Space tape (figure 36)

A magnetic tape shall be recorded as a Single Data Space tape or as a Partitioned tape. The layout of a Single Data Space tape is specified in this clause, that of a Partitioned tape in clause 17.

The layout of the Single Data Space tape consists of six areas:

- the Device Area
- the Reference Area
- the System Area
- the Data Area
- the EOD Area
- the Post-EOD Area

16.1 Frame type

There are eight types of Frames.

16.1.1 Data Frame

A Data Frame shall include a minimum of one Data Block in a partition in which ECC3 is disabled or it shall include two ECC3 Blocks and a minimum of one Data Block in a partition in which ECC3 is enabled. A Data Frame may include Gap Blocks and/or Short File Mark Blocks.

16.1.2 Gap Frame

All Information Blocks in a Gap Frame shall be Gap Blocks.

16.1.3 Long File Mark Frame

All Information Blocks in a Long File Mark Frame shall be Long File Mark Blocks.

16.1.4 Short File Mark Frame

A Short File Mark Frame shall include a minimum of one Short File Mark Block. The remaining Information Blocks shall be Gap Blocks.

16.1.5 Set Mark Frame

All Information Blocks in a Set Mark Frame shall be Set Mark Blocks.

16.1.6 End of Data Frame

All Information Blocks in a End of Data Frame shall be End of Data Blocks.

Copyright International Organization for Standardization
Provided by IHS under license with ISO
No reproduction or networking permitted without license from IHS Not for Resale

16.1.7 Format Frame

All Information Blocks in a Format Frame shall be Format Blocks.

16.1.8 Data Frame in System Area

All Information Blocks in a Data Frame in a System Area shall be Data Blocks in System Area.

16.2 Device Area

This area shall be the first area on the magnetic tape and shall extend from PBOT to LBOT. It shall not be used for writing data for interchange. Its length, measured parallel to the Tape Reference Edge, from PBOT to the first bit of the first Information Block of the first recorded track of the Reference Area, shall be 735 mm ± 10 mm.

16.3 Reference Area

This area shall consist of 600 Format Frames. The first Frame of the Reference Area starts at LBOT and has an Absolute Frame Address of 0. The Reference Area is used as a physical reference when updating the System Log.

16.4 System Area

This area shall consist of Guard Band No.1, the System Log Preamble, System Log, System Log Postamble, Guard Band No.2, and the Data Area Preamble.

16.4.1 Guard Band No.1

This band shall have a nominal length equivalent to 10 Frames, with a minimum length of five and a maximum length of 15 Frames. The Frames written in this band shall be Gap Frames. It is used to accommodate positioning tolerances when updating the System Log. Discontinuities or repetitions of the Absolute Frame Address may occur in this band. The recorded signals are not defined in this band and shall be ignored in interchange.

16.4.2 System Log Preamble

The System Log Preamble shall consist of 100 Gap Frames, having the Absolute Frame Addresses 610 to 709.

16.4.3 System Log

The System Log shall consist of 100 Data Frames in System Area, having the Absolute Frame Addresses 710 to 809.

Note - The history data in the System log cannot be relied upon to be always accurate, because drives cannot update the log if the Write-inhibit Hole is open. It may also be destroyed during initialization.

16.4.4 System Log Postamble

The System Log Postamble shall consist of 30 Gap Frames, having the Absolute Frame Addresses 810 to 839.

Note - It is recommended that the continuum comprising the System log Preamble, System log and System log Postamble be written in a continuous motion when the System log is updated.

16.4.5 Guard Band No.2

This band shall have a nominal length equivalent to 60 Frames. Its actual length depends on the actual length of Guard Band No.1 and on the actual position of the first Frame of the Data Area Preamble, and hence may vary from 30 to 90 Frames. The Frames written in this band shall be Gap Frames. Discontinuities or repetitions of the Absolute Frame Address may occur in this band. The recorded signals are not defined in this band and shall be ignored in interchange.

16.4.6 Data Area Preamble

The Data Area Preamble shall consist of 100 Gap Frames, having the Absolute Frame Addresses 900 to 999. The Data Area Preamble shall immediately precede the Data Area and be contiguous with it.

16.5 Data Area

A Data Area must include at least one Data Frame. A Data Area may include a minimum of one Long File Mark and/or a minimum of one Short File Mark and/or a minimum of one Set Mark and/or a minimum of one Gap Frame.

16.5.1 Long File Mark

A Long File Mark shall consist of one Gap Frame, one Long File Mark Frame and one Gap Frame.

The Search Information and the ID Information shall be the same for all Information Blocks of the Long File Mark Frame of a Long File Mark.

16.5.2 Short File Mark

A Short File Mark shall consist of one Short File Mark Block.

--`,,```,,,,````-`-`,,`,,`,`,,`---

Copyright International Organization for Standardization
Provided by IHS under license with ISO
No reproduction or networking permitted without license from IHS Not for Resale

16.5.3 Set Mark

A Set Mark shall consist of one Gap Frame, one Set Mark Frame and one Gap Frame.

The Search Information and the ID Information shall be the same for all Information Blocks of the Set Mark Frame of a Set Mark.

16.5.4 Write operation

When data to be written is absent during the write operation as a result of a write command, a minimum of one Gap Frame shall be written subsequent to the last Data Frame.

When the Write operation resulting from a Write command is completed, a minimum of one Gap Frame shall be written subsequent to the last Data Frame.

16.5.5 Append and overwrite operations

When new data is appended to data previously recorded on the tape, or existing data is overwritten by new data, the append or overwrite operation shall start at the Frame following a Gap Frame previously written. The Gap Frame may be in the Data Area Preamble, in a Long File Mark, in an EOD Area or as described in clause 16.5.4. The first Frame written by the append or overwrite operation shall be a Gap Frame. No unrecorded space or Absolute Frame Address discontinuity or repetition is allowed at appending or overwriting point.

16.5.6 Rewritten Frames

In the Data Area, a Data Frame, a Short File Mark Frame or a Gap Frame may be repeated by rewriting it further along the tape. The repeated Frame may be written after two other Frames have been written. Such sequence (i.e. the original or rewritten Frame and the two following Frames) can be repeated many times, e.g. to allow skipping over bad areas on the tape. The maximum number of instances of a sequence shall be 256, i.e. the original and up to 255 repetitions.

The contents of each Information Block in a rewritten Frame is the same as that of the Information Block having the same Information Block Number of the original Frame, except for the Absolute Frame Address in Search Information, byte 3 of ID Information, Sync Block ID W1 and Sync Block ID W2.

16.6 EOD Area

The Data Area shall be followed by an EOD Area.

It shall consist of 10 Gap Frames and 1 000 EOD Frames, and shall start after the last Frame recorded in the Data Area.

More than one EOD Area may exist on a tape. The EOD Area closest to LBOT shall be the only valid one for information interchange.

16.7 Post-EOD Area

The EOD Area shall be followed by a Post-EOD Area which extends to PEOT. The contents of this Post-EOD Area are not defined for interchange. Its length, measured parallel to the Tape Reference Edge, shall be 200 mm min.

Copyright International Organization for Standardization
Provided by IHS under license with ISO
No reproduction or networking permitted without license from IHS Not for Resale

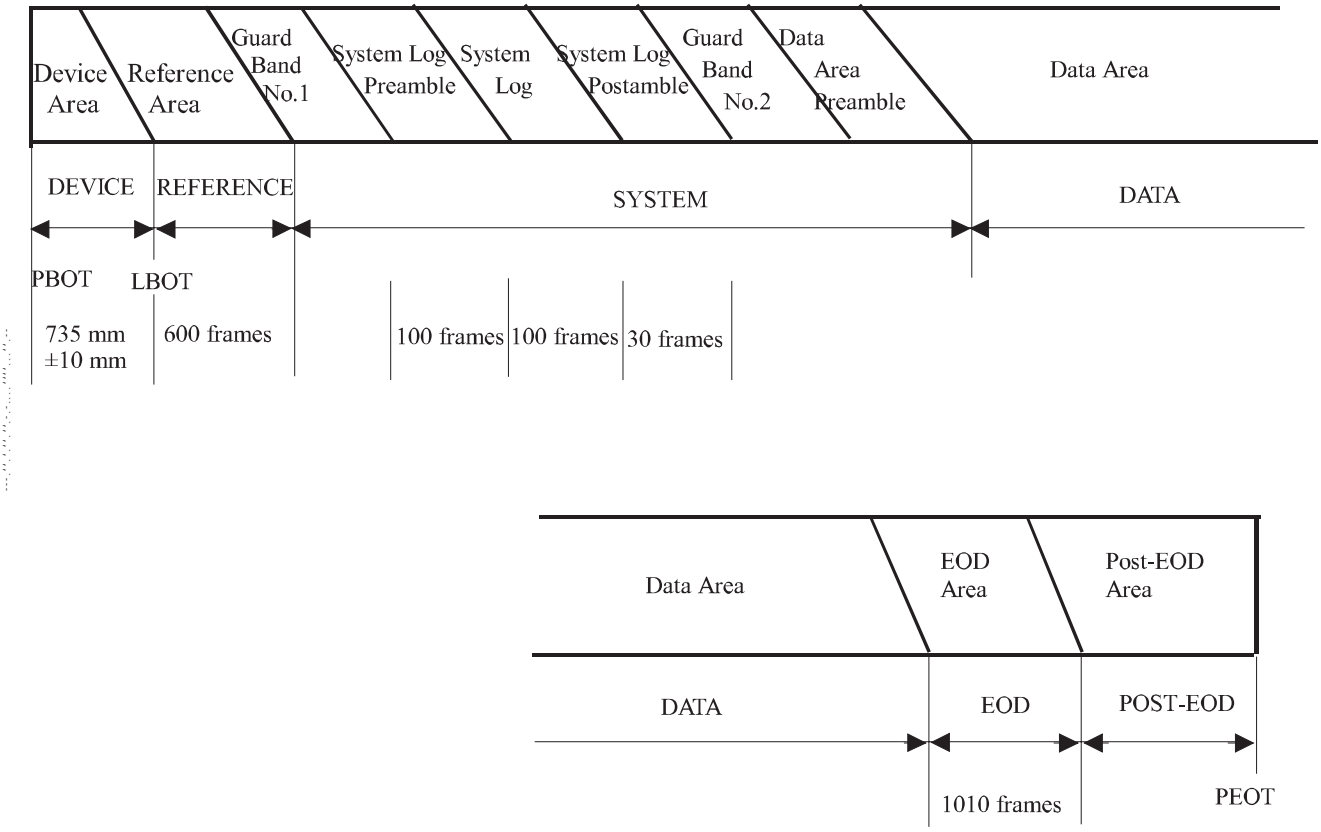

Figure 36 - Layout of a Single Data Space tape

17 Layout of a partitioned tape (figure 37)

A partitioned tape provides on one magnetic tape two independent partitions, each of which has a structure and properties similar to those of the recorded parts of a Single Data Space tape.

With the exception of the differences described hereafter, all of the foregoing descriptions of the recorded format shall apply to each partition of a partitioned tape.

17.1 Overall magnetic tape layout

The layout of a partitioned tape shall consist of the Device Area, Partition 1 and Partition 0, which shall be located in that order from PBOT to PEOT.

17.1.1 Device Area

This area shall be identical with that of a Single Data Space tape.

17.1.2 Partition 1

17.1.2.1 Physical End of Partition 1 (PEOP 1)

The PEOP 1 shall be a reference point at the Partition Boundary. This reference point is intended for use in a manner identical with that of PEOT on a Single Data Space tape, i.e. no recording shall occur within Partition 1 beyond PEOP 1, except during initialization.

Note - After overwriting commences in Partition 1, all data between the current recording point and PEOP1 is logically inaccessible. Data in Partition 0 is unaffected.

17.1.2.2 Partition 1 Post-EOD Area

If the end of the EOD Area occurs before PEOP 1, it shall be followed by a Post-EOD Area which extends to PEOP 1. The contents of this Partition 1 Post-EOD Area are not defined for interchange.

Copyright International Organization for Standardization
Provided by IHS under license with ISO
No reproduction or networking permitted without license from IHS
Not for Resale

17.1.3 Partition 0

17.1.3.1 Logical Beginning of Partition 0 (LBOP 0)

The LBOP 0 is the Partition Boundary. The first Frame after LBOP 0 shall have the Absolute Frame Address of zero.

17.2 Partition Identification

The least significant bit of byte 18 of Search Information (see 11.2.1.1.1.6) shall be set to ZERO for Partition 0 and to ONE for Partition 1.

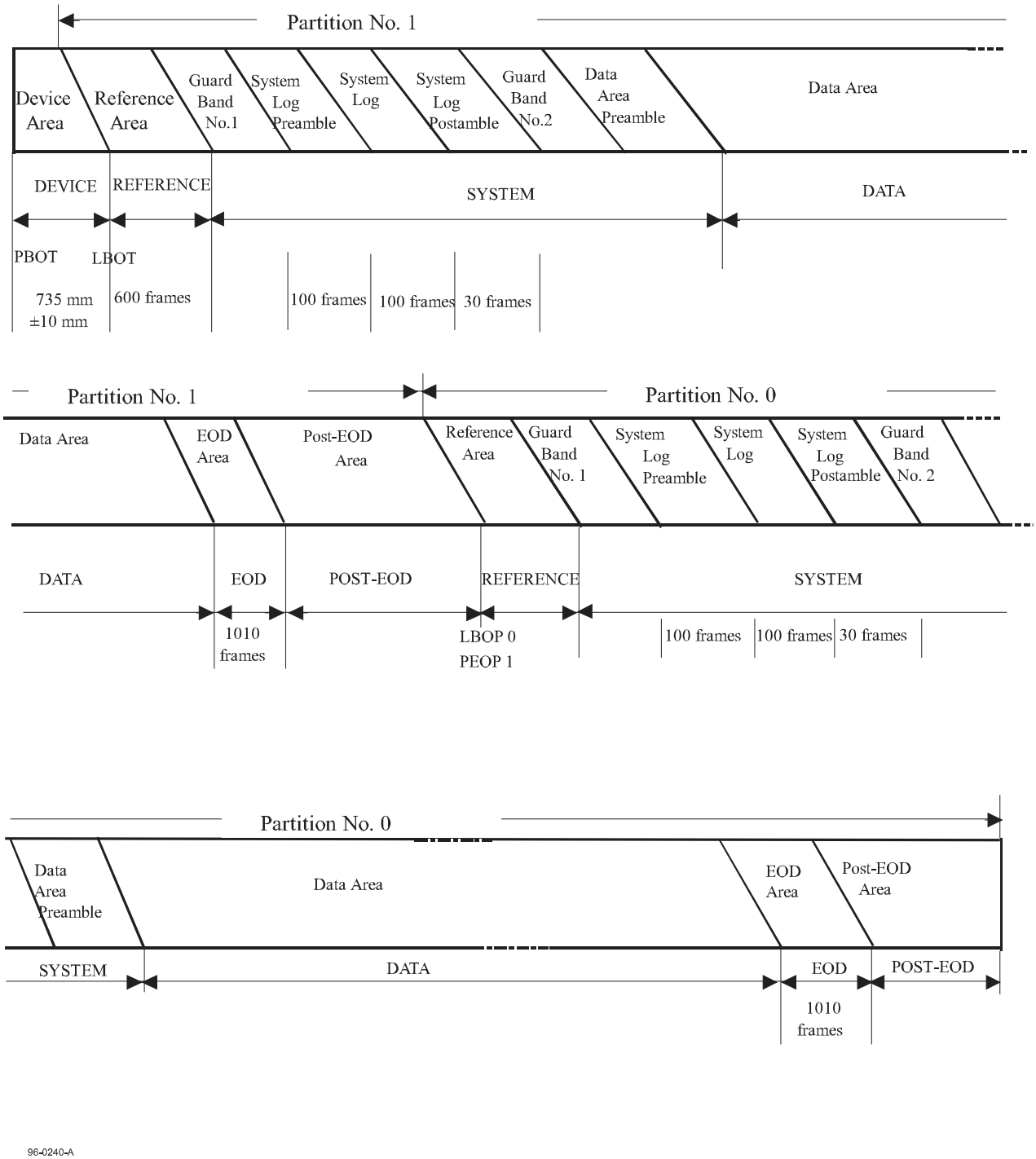

Figure 37 - Layout of a partitioned tape

Copyright International Organization for Standardization
Provided by IHS under license with ISO
No reproduction or networking permitted without license from IHS
Not for Resale

Annex A

(normative)

Measurement of light transmittance of tape and leaders

A.1 Introduction

The following description outlines the general principle of the measuring equipment and measuring method to be applied when measuring the light transmittance of tape.

For the purpose of this International Standard "light transmittance" is defined by convention as the relationship between the reading obtained from the measuring equipment with the test piece inserted and the reading obtained when no test piece is present. The transmittance value is expressed as the percentage ratio of the two readings.

A.2 Description of the measuring equipment

The equipment shall consist of

- the radiation source;
- the radiation receiver;
- the measuring mask;
- the optical path;
- the measuring circuitry.

A.2.1 Radiation source

An infra-red light-emitting diode (LED) with the following parameters shall be used:

wavelength at peak emission : 850 nm ± 50 nm
half-power bandwidth : ± 50 nm

A.2.2 Radiation receiver

A flat silicon photo diode shall be used. It shall be operated in the short circuit mode.

A.2.3 Measuring mask

The measuring mask shall have a thickness of 2 mm and a circular aperture of diameter *d* such that the area is 80 % to 100 % of the active area of the photo diode.

The surface of the mask shall be matt black.

The test piece shall be held firmly against the mask to cover the aperture and to ensure that no ambient light leaks past.

A.2.4 Optical path (figure A.1)

The optical path shall be perpendicular to the mask. The distance from the emitting surface of the LED to the mask shall be

$$L = \frac{d}{2\tan\alpha} \text{ mm}$$

where *d* is in mm and α is the angle where the relative intensity of the LED is equal to, or greater than, 95% of the maximum intensity of the optical axis.

A.2.5 Finish

The whole assembly shall be enclosed in a matt black case.

A.2.6 Measuring circuitry (figure A.2)

The components of the measuring circuitry are

E : regulated power supply with variable output voltage
R : current-limiting resistor
LED : light-emitting diode

--`,,```,,,,````-`-`,,`,,`,`,,`---

Copyright International Organization for Standardization
Provided by IHS under license with ISO
No reproduction or networking permitted without license from IHS Not for Resale

Di : silicon photo diode
A : operational amplifier
R_{f0}, R_{f1} : feedback resistors
S : gain switch
V : voltmeter

The forward current of the LED, and consequently its radiation power, can be varied by means of the power supply E.

Di is operating in the short circuit mode.

The output voltage of the operational amplifier is given by

$$V_0 = I_k \times R_f$$

where:

I_k is the short-circuit current of Di.

The output voltage is therefore a linear function of the light intensity.

R_{f0} and R_{f1} shall be low temperature-drift resistors with an accuracy of 1%. The following ratio applies

$$\frac{R_{f0}}{R_{f1}} = \frac{1}{20}$$

A.3 Measuring method

– Set switch S to position 0.

– With no test piece mounted vary the supply voltage of E until voltmeter V reads full scale (100 %).

– Mount a leader or trailer tape on the mask. The reading of the voltmeter shall be in the range 60 % to 100 %.

– Mount a test piece of magnetic tape on the mask. Set switch S to position 1. Full deflection of the voltmeter now represents a light transmittance of 5 %.

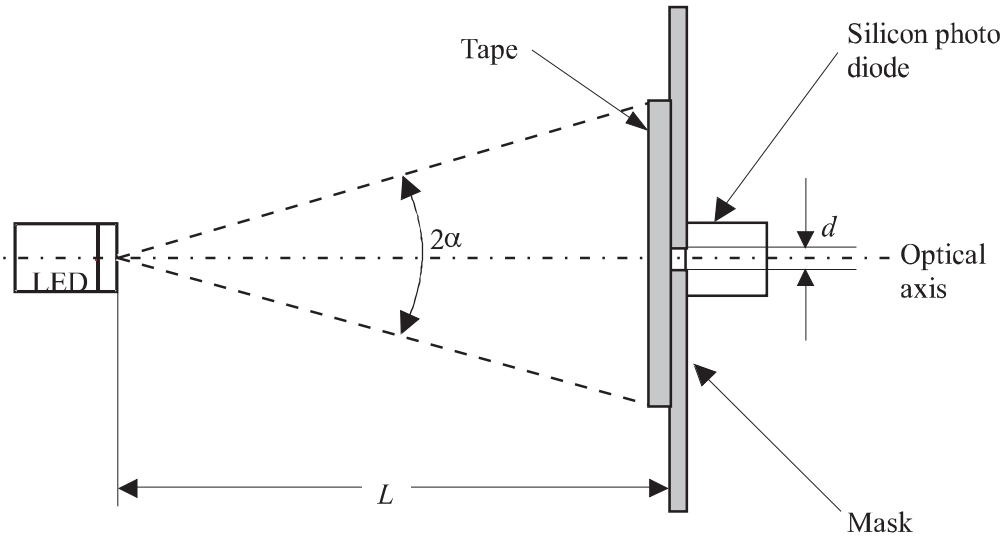

Figure A.1 - Optical arrangement

Copyright International Organization for Standardization
Provided by IHS under license with ISO
No reproduction or networking permitted without license from IHS
Not for Resale

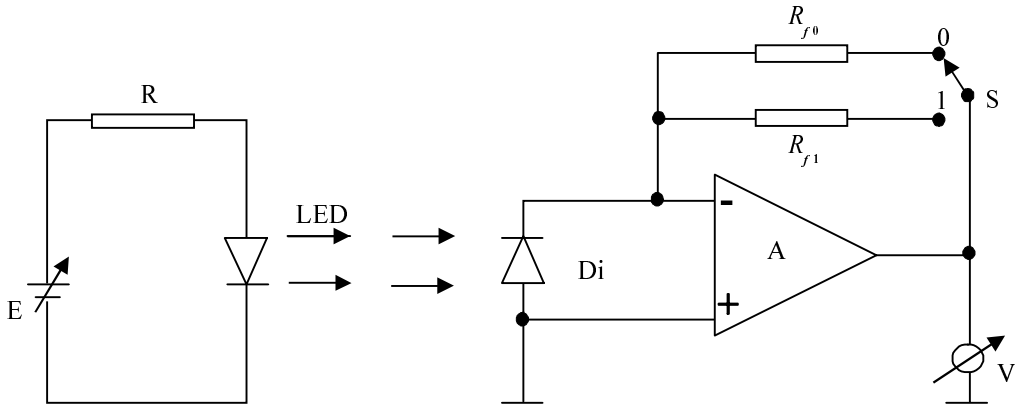

Figure A.2 - Measuring circuitry

Copyright International Organization for Standardization
Provided by IHS under license with ISO
No reproduction or networking permitted without license from IHS
Not for Resale

Annex B

(normative)

Measurement of Signal-to-Noise Ratio

The Signal-to-Noise Ratio shall be measured using a spectrum analyzer with a resolution bandwidth of 10 kHz.

Unless otherwise stated, the test conditions are those defined in clause 10 of this International Standard.

B.1 a.c. erase the tape to be tested.

B.2 Record the tape at 3 658,1 ftpmm. This recording frequency is denoted f_1.

B.3 Measure the rms signal amplitude by gathering the sweep of the spectrum analyzer over a length of track that corresponds to a 160° ± 10° arc of scanner rotation. The centre of this arc shall be within 5° of the centre of the arc of the read head' s contact with the tape. Each sweep yields one measured value. Compute the average of 8 measured values. This is S_{tape}.

During each of the same 8 sweeps, measure the total rms noise level at frequency f_2, where f_2 is 2 MHz less than f_1. Each sweep yields one measured value. Compute the average of 8 measured values. This is N_{total}.

B.4 Measure the rms read channel noise level at frequency f_2 over the same 160° arc, without a tape loaded but with the motors running. Each sweep yields one measured value. Compute the average of 8 measured values. This is N_{amp}.

B.5 Compute the Signal-to-Noise Ratio for this pass, $20 \log \frac{S_{tape}}{N_{tape}}$ dB,

where

$N_{tape} = \sqrt{N_{total}^2 - N_{amp}^2}$

$\frac{N_{amp}}{N_{tape}}$ shall be less than 70%.

B.6 Repeat B.3 to B.5 for at least 64 passes. Take the average of the 64 Signal-to-Noise Ratios to determine the Signal-to-Noise Ratio for the tape (SNR_{tape}).

B.7 Repeat B.1 to B.6 for the Secondary Standard Reference Tape, to give SNR_{MSRT}

The Signal-to-Noise Ratio characteristic is SNR_{tape} - SNR_{MSRT} dB.

Copyright International Organization for Standardization
Provided by IHS under license with ISO
No reproduction or networking permitted without license from IHS Not for Resale

Annex C
(normative)

Representation of 8-bit bytes by 10-bit patterns

C.1 The 8-bit bytes are represented with the most significant bit to the left and the least significant bit to the right. The 10-bit patterns are represented with the bit recorded first to the left and the bit recorded last to the right.

C.2 The magnetic recording system chosen requires that the d.c. level of the recorded signals be maintained near zero. All 10-bit patterns are either balanced to a d.c. level of zero or have a d.c. imbalance of 6:4 or 4:6.

Each 10-bit pattern is accompanied by an indicator Q which instructs the translator which of the two alternative patterns should be selected for the next 10-bit pattern in order to maintain the lowest d.c. level.

Q' is the d.c. information of the previous pattern.

Q is the d.c. information of the current pattern.

C.3 The left-hand column indicates the hexadecimal notation of the 8-bit byte for ease of search.

Copyright International Organization for Standardization
Provided by IHS under license with ISO
No reproduction or networking permitted without license from IHS Not for Resale

		Q' = - 1			Q' = 1		
8-bit byte		10-Channel bit pattern	DC	Q	10-Channel bit pattern	DC	Q
(00)	00000000	0101010101	0	1	0101010101	0	-1
(01)	00000001	0101010111	0	- 1	0101010111	0	1
(02)	00000010	0101011101	0	- 1	0101011101	0	1
(03)	00000011	0101011111	0	1	0101011111	0	-1
(04)	00000100	0101001001	0	- 1	0101001001	0	1
(05)	00000101	0101001011	0	1	0101001011	0	- 1
(06)	00000110	0101001110	0	1	0101001110	0	- 1
(07)	00000111	0101011010	0	1	0101011010	0	- 1
(08)	00001000	0101110101	0	- 1	0101110101	0	1
(09)	00001001	0101110111	0	1	0101110111	0	- 1
(0A)	00001010	0101111101	0	1	0101111101	0	- 1
(0B)	00001011	0101111111	0	- 1	0101111111	0	1
(0C)	00001100	0101101001	0	1	0101101001	0	- 1
(0D)	00001101	0101101011	0	- 1	0101101011	0	1
(0E)	00001110	0101101110	0	- 1	0101101110	0	1
(0F)	00001111	0101111010	0	- 1	0101111010	0	1
(10)	00010000	1101010010	0	1	1101010010	0	- 1
(11)	00010001	0100010010	2	- 1	1100010010	- 2	- 1
(12)	00010010	0101010010	0	- 1	0101010010	0	1
(13)	00010011	0101110010	0	1	0101110010	0	- 1
(14)	00010100	1101110001	2	1	0101110001	- 2	1
(15)	00010101	1101110011	2	- 1	0101110011	- 2	- 1
(16)	00010110	1101110110	2	- 1	0101110110	- 2	- 1
(17)	00010111	1101110010	0	- 1	1101110010	0	1
(18)	00011000	0101100101	2	- 1	1101100101	- 2	- 1
(19)	00011001	0101100111	2	1	1101100111	- 2	1
(1A)	00011010	0101101101	2	1	1101101101	- 2	1
(1B)	00011011	0101101111	2	- 1	1101101111	- 2	- 1
(1C)	00011100	0101111001	2	1	1101111001	- 2	1
(1D)	00011101	0101111011	2	- 1	1101111011	- 2	- 1
(1E)	00011110	0101111110	2	- 1	1101111110	- 2	- 1
(1F)	00011111	0101101010	2	- 1	1101101010	- 2	- 1
(20)	00100000	0111010101	0	- 1	0111010101	0	1
(21)	00100001	0111010111	0	1	0111010111	0	- 1
(22)	00100010	0111011101	0	1	0111011101	0	- 1
(23)	00100011	0111011111	0	- 1	0111011111	0	1
(24)	00100100	1111010001	2	1	0111010001	- 2	1
(25)	00100101	1111010011	2	- 1	0111010011	- 2	- 1
(26)	00100110	1111010110	2	- 1	0111010110	- 2	- 1
(27)	00100111	0111011010	0	- 1	0111011010	0	1

--`,,```,,,,````-`-`,,`,,`,`,,`---
Copyright International Organization for Standardization
Provided by IHS under license with ISO
No reproduction or networking permitted without license from IHS
Not for Resale

		Q' = - 1			Q' = 1		
	8-bit byte	10-Channel bit pattern	DC	Q	10-Channel bit pattern	DC	Q
(28)	00101000	0111110101	0	1	0111110101	0	- 1
(29)	00101001	0111110111	0	- 1	0111110111	0	1
(2A)	00101010	0111111101	0	- 1	0111111101	0	1
(2B)	00101011	0111111111	0	1	0111111111	0	- 1
(2C)	00101100	0111101001	0	- 1	0111101001	0	1
(2D)	00101101	0111101011	0	1	0111101011	0	- 1
(2E)	00101110	0111101110	0	1	0111101110	0	- 1
(2F)	00101111	0111111010	0	1	0111111010	0	- 1
(30)	00110000	0111010010	0	1	0111010010	0	- 1
(31)	00110001	1110010010	2	- 1	0110010010	- 2	- 1
(32)	00110010	1111010010	0	- 1	1111010010	0	1
(33)	00110011	1111110010	0	1	1111110010	0	- 1
(34)	00110100	0111110001	2	1	1111110001	- 2	1
(35)	00110101	0111110011	2	- 1	1111110011	- 2	- 1
(36)	00110110	0111110110	2	- 1	1111110110	- 2	- 1
(37)	00110111	0111110010	0	- 1	0111110010	0	1
(38)	00111000	0111000101	2	- 1	1111000101	- 2	- 1
(39)	00111001	0111000111	2	1	1111000111	- 2	1
(3A)	00111010	0111001101	2	1	1111001101	- 2	1
(3B)	00111011	0111001111	2	- 1	1111001111	- 2	- 1
(3C)	00111100	0111011001	2	1	1111011001	- 2	1
(3D)	00111101	0111011011	2	- 1	1111011011	- 2	- 1
(3E)	00111110	0111011110	2	- 1	1111011110	- 2	- 1
(3F)	00111111	0111001010	2	- 1	1111001010	- 2	- 1
(40)	01000000	0100010101	2	1	1100010101	- 2	1
(41)	01000001	0100010111	2	- 1	1100010111	- 2	- 1
(42)	01000010	0100011101	2	- 1	1100011101	- 2	- 1
(43)	01000011	0100011111	2	1	1100011111	- 2	1
(44)	01000100	0101010001	2	1	1101010001	- 2	1
(45)	01000101	0101010011	2	- 1	1101010011	- 2	- 1
(46)	01000110	0101010110	2	- 1	1101010110	- 2	- 1
(47)	01000111	0100011010	2	1	1100011010	- 2	1
(48)	01001000	0100110101	2	- 1	1100110101	- 2	- 1
(49)	01001001	0100110111	2	1	1100110111	- 2	1
(4A)	01001010	0100111101	2	1	1100111101	- 2	1
(4B)	01001011	0100111111	2	- 1	1100111111	- 2	- 1
(4C)	01001100	0100101001	2	1	1100101001	- 2	1
(4D)	01001101	0100101011	2	- 1	1100101011	- 2	- 1
(4E)	01001110	0100101110	2	- 1	1100101110	- 2	- 1
(4F)	01001111	0100111010	2	- 1	1100111010	- 2	- 1

--`,,```,,,,````-`-`,,`,,`,`,,`---

Copyright International Organization for Standardization
Provided by IHS under license with ISO
No reproduction or networking permitted without license from IHS Not for Resale

		Q' = - 1			Q' = 1		
	8-bit byte	10-Channel bit pattern	DC	Q	10-Channel bit pattern	DC	Q
(50)	01010000	0100100101	0	- 1	0100100101	0	1
(51)	01010001	0100100111	0	1	0100100111	0	- 1
(52)	01010010	0100101101	0	1	0100101101	0	- 1
(53)	01010011	0100101111	0	- 1	0100101111	0	1
(54)	01010100	0100111001	0	1	0100111001	0	- 1
(55)	01010101	0100111011	0	- 1	0100111011	0	1
(56)	01010110	0100111110	0	- 1	0100111110	0	1
(57)	01010111	0100101010	0	- 1	0100101010	0	1
(58)	01011000	0110100101	0	1	0110100101	0	- 1
(59)	01011001	0110100111	0	- 1	0110100111	0	1
(5A)	01011010	0110101101	0	- 1	0110101101	0	1
(5B)	01011011	0110101111	0	1	0110101111	0	- 1
(5C)	01011100	0110111001	0	- 1	0110111001	0	1
(5D)	01011101	0110111011	0	1	0110111011	0	- 1
(5E)	01011110	0110111110	0	1	0110111110	0	- 1
(5F)	01011111	0110101010	0	1	0110101010	0	- 1
(60)	01100000	0010010101	0	- 1	0010010101	0	1
(61)	01100001	0010010111	0	1	0010010111	0	- 1
(62)	01100010	0010011101	0	1	0010011101	0	- 1
(63)	01100011	0010011111	0	- 1	0010011111	0	1
(64)	01100100	1010010001	2	1	0010010001	- 2	1
(65)	01100101	1010010011	2	- 1	0010010011	- 2	- 1
(66)	01100110	1010010110	2	- 1	0010010110	- 2	- 1
(67)	01100111	0010011010	0	- 1	0010011010	0	1
(68)	01101000	0010110101	0	1	0010110101	0	- 1
(69)	01101001	0010110111	0	- 1	0010110111	0	1
(6A)	01101010	0010111101	0	- 1	0010111101	0	1
(6B)	01101011	0010111111	0	1	0010111111	0	- 1
(6C)	01101100	0010101001	0	- 1	0010101001	0	1
(6D)	01101101	0010101011	0	1	0010101011	0	- 1
(6E)	01101110	0010101110	0	1	0010101110	0	- 1
(6F)	01101111	0010111010	0	1	0010111010	0	- 1
(70)	01110000	0010010010	0	1	0010010010	0	- 1
(71)	01110001	1011010010	2	- 1	0011010010	- 2	- 1
(72)	01110010	1010010010	0	- 1	1010010010	0	1
(73)	01110011	1010110010	0	1	1010110010	0	- 1
(74)	01110100	0010110001	2	1	1010110001	- 2	1
(75)	01110101	0010110011	2	- 1	1010110011	- 2	- 1
(76)	01110110	0010110110	2	- 1	1010110110	- 2	- 1
(77)	01110111	0010110010	0	- 1	0010110010	0	1

Copyright International Organization for Standardization
Provided by IHS under license with ISO
No reproduction or networking permitted without license from IHS Not for Resale

		Q' = - 1			Q' = 1		
	8-bit byte	10-Channel bit pattern	DC	Q	10-Channel bit pattern	DC	Q
(78)	01111000	0011100101	0	1	0011100101	0	- 1
(79)	01111001	0011100111	0	- 1	0011100111	0	1
(7A)	01111010	0011101101	0	- 1	0011101101	0	1
(7B)	01111011	0011101111	0	1	0011101111	0	- 1
(7C)	01111100	0011111001	0	- 1	0011111001	0	1
(7D)	01111101	0011111011	0	1	0011111011	0	- 1
(7E)	01111110	0011111110	0	1	0011111110	0	- 1
(7F)	01111111	0011101010	0	1	0011101010	0	- 1
(80)	10000000	1010010101	0	1	1010010101	0	- 1
(81)	10000001	1010010111	0	- 1	1010010111	0	1
(82)	10000010	1010011101	0	- 1	1010011101	0	1
(83)	10000011	1010011111	0	1	1010011111	0	- 1
(84)	10000100	1010001001	0	- 1	1010001001	0	1
(85)	10000101	1010001011	0	1	1010001011	0	- 1
(86)	10000110	1010001110	0	1	1010001110	0	- 1
(87)	10000111	1010011010	0	1	1010011010	0	- 1
(88)	10001000	1010110101	0	- 1	1010110101	0	1
(89)	10001001	1010110111	0	1	1010110111	0	- 1
(8A)	10001010	1010111101	0	1	1010111101	0	- 1
(8B)	10001011	1010111111	0	- 1	1010111111	0	1
(8C)	10001100	1010101001	0	1	1010101001	0	- 1
(8D)	10001101	1010101011	0	- 1	1010101011	0	1
(8E)	10001110	1010101110	0	- 1	1010101110	0	1
(8F)	10001111	1010111010	0	- 1	1010111010	0	1
(90)	10010000	1100100101	0	1	1100100101	0	- 1
(91)	10010001	1100100111	0	- 1	1100100111	0	1
(92)	10010010	1100101101	0	- 1	1100101101	0	1
(93)	10010011	1100101111	0	1	1100101111	0	- 1
(94)	10010100	1100111001	0	- 1	1100111001	0	1
(95)	10010101	1100111011	0	1	1100111011	0	- 1
(96)	10010110	1100111110	0	1	1100111110	0	- 1
(97)	10010111	1100101010	0	1	1100101010	0	- 1
(98)	10011000	1010100101	2	- 1	0010100101	- 2	- 1
(99)	10011001	1010100111	2	1	0010100111	- 2	1
(9A)	10011010	1010101101	2	1	0010101101	- 2	1
(9B)	10011011	1010101111	2	- 1	0010101111	- 2	- 1
(9C)	10011100	1010111001	2	1	0010111001	- 2	1
(9D)	10011101	1010111011	2	- 1	0010111011	- 2	- 1
(9E)	10011110	1010111110	2	- 1	0010111110	- 2	- 1
(9F)	10011111	1010101010	2	- 1	0010101010	- 2	- 1

Copyright International Organization for Standardization
Provided by IHS under license with ISO
No reproduction or networking permitted without license from IHS
Not for Resale

		Q' = - 1			Q' = 1		
	8-bit byte	10-Channel bit pattern	DC	Q	10-Channel bit pattern	DC	Q
(A0)	10100000	1011010101	2	1	0011010101	- 2	1
(A1)	10100001	1011010111	2	- 1	0011010111	- 2	- 1
(A2)	10100010	1011011101	2	- 1	0011011101	- 2	- 1
(A3)	10100011	1011011111	2	1	0011011111	- 2	1
(A4)	10100100	1011001001	2	- 1	0011001001	- 2	- 1
(A5)	10100101	1011001011	2	1	0011001011	- 2	1
(A6)	10100110	1011001110	2	1	0011001110	- 2	1
(A7)	10100111	1011011010	2	1	0011011010	- 2	1
(A8)	10101000	1011110101	2	- 1	0011110101	- 2	- 1
(A9)	10101001	1011110111	2	1	0011110111	- 2	1
(AA)	10101010	1011111101	2	1	0011111101	- 2	1
(AB)	10101011	1011111111	2	- 1	0011111111	- 2	- 1
(AC)	10101100	1011101001	2	1	0011101001	- 2	1
(AD)	10101101	1011101011	2	- 1	0011101011	- 2	- 1
(AE)	10101110	1011101110	2	- 1	0011101110	- 2	- 1
(AF)	10101111	1011111010	2	- 1	0011111010	- 2	- 1
(B0)	10110000	1101110101	0	1	1101110101	0	- 1
(B1)	10110001	1101110111	0	- 1	1101110111	0	1
(B2)	10110010	1101111101	0	- 1	1101111101	0	1
(B3)	10110011	1101111111	0	1	1101111111	0	- 1
(B4)	10110100	1101101001	0	- 1	1101101001	0	1
(B5)	10110101	1101101011	0	1	1101101011	0	- 1
(B6)	10110110	1101101110	0	1	1101101110	0	- 1
(B7)	10110111	1101111010	0	1	1101111010	0	- 1
(B8)	10111000	1011100101	0	- 1	1011100101	0	1
(B9)	10111001	1011100111	0	1	1011100111	0	- 1
(BA)	10111010	1011101101	0	1	1011101101	0	- 1
(BB)	10111011	1011101111	0	- 1	1011101111	0	1
(BC)	10111100	1011111001	0	1	1011111001	0	- 1
(BD)	10111101	1011111011	0	- 1	1011111011	0	1
(BE)	10111110	1011111110	0	- 1	1011111110	0	1
(BF)	10111111	1011101010	0	- 1	1011101010	0	1
(C0)	11000000	1110010101	2	1	0110010101	- 2	1
(C1)	11000001	1110010111	2	- 1	0110010111	- 2	- 1
(C2)	11000010	1110011101	2	- 1	0110011101	- 2	- 1
(C3)	11000011	1110011111	2	1	0110011111	- 2	1
(C4)	11000100	1110001001	2	- 1	0110001001	- 2	- 1
(C5)	11000101	1110001011	2	1	0110001011	- 2	1
(C6)	11000110	1110001110	2	1	0110001110	- 2	1
(C7)	11000111	1110011010	2	1	0110011010	- 2	1

--`,,```,,,,````-`-`,,`,,`,`,,`---
Copyright International Organization for Standardization
Provided by IHS under license with ISO
No reproduction or networking permitted without license from IHS
Not for Resale

		Q' = - 1			Q' = 1		
	8-bit byte	10-Channel bit pattern	DC	Q	10-Channel bit pattern	DC	Q
(C8)	11001000	1110110101	2	- 1	0110110101	- 2	- 1
(C9)	11001001	1110110111	2	1	0110110111	- 2	1
(CA)	11001010	1110111101	2	1	0110111101	- 2	1
(CB)	11001011	1110111111	2	- 1	0110111111	- 2	- 1
(CC)	11001100	1110101001	2	1	0110101001	- 2	1
(CD)	11001101	1110101011	2	- 1	0110101011	- 2	- 1
(CE)	11001110	1110101110	2	- 1	0110101110	- 2	- 1
(CF)	11001111	1110111010	2	- 1	0110111010	- 2	- 1
(D0)	11010000	1101000101	2	- 1	0101000101	- 2	- 1
(D1)	11010001	1101000111	2	1	0101000111	- 2	1
(D2)	11010010	1101001101	2	1	0101001101	- 2	1
(D3)	11010011	1101001111	2	- 1	0101001111	- 2	- 1
(D4)	11010100	1101011001	2	1	0101011001	- 2	1
(D5)	11010101	1101011011	2	- 1	0101011011	- 2	- 1
(D6)	11010110	1101011110	2	- 1	0101011110	- 2	- 1
(D7)	11010111	1101001010	2	- 1	0101001010	- 2	- 1
(D8)	11011000	1110100101	0	- 1	1110100101	0	1
(D9)	11011001	1110100111	0	1	1110100111	0	- 1
(DA)	11011010	1110101101	0	1	1110101101	0	- 1
(DB)	11011011	1110101111	0	- 1	1110101111	0	1
(DC)	11011100	1110111001	0	1	1110111001	0	- 1
(DD)	11011101	1110111011	0	- 1	1110111011	0	1
(DE)	11011110	1110111110	0	- 1	1110111110	0	1
(DF)	11011111	1110101010	0	- 1	1110101010	0	1
(E0)	11100000	1111010101	0	1	1111010101	0	- 1
(E1)	11100001	1111010111	0	- 1	1111010111	0	1
(E2)	11100010	1111011101	0	- 1	1111011101	0	1
(E3)	11100011	1111011111	0	1	1111011111	0	- 1
(E4)	11100100	1111001001	0	- 1	1111001001	0	1
(E5)	11100101	1111001011	0	1	1111001011	0	- 1
(E6)	11100110	1111001110	0	1	1111001110	0	- 1
(E7)	11100111	1111011010	0	1	1111011010	0	- 1
(E8)	11101000	1111110101	0	- 1	1111110101	0	1
(E9)	11101001	1111110111	0	1	1111110111	0	- 1
(EA)	11101010	1111111101	0	1	1111111101	0	- 1
(EB)	11101011	1111111111	0	- 1	1111111111	0	1
(EC)	11101100	1111101001	0	1	1111101001	0	- 1
(ED)	11101101	1111101011	0	- 1	1111101011	0	1
(EE)	11101110	1111101110	0	- 1	1111101110	0	1
(EF)	11101111	1111111010	0	- 1	1111111010	0	1

Copyright International Organization for Standardization
Provided by IHS under license with ISO
No reproduction or networking permitted without license from IHS
Not for Resale

		Q' = - 1			Q' = 1		
	8-bit byte	10-Channel bit pattern	DC	Q	10-Channel bit pattern	DC	Q
(F0)	11110000	1101010101	0	- 1	1101010101	0	1
(F1)	11110001	1101010111	0	1	1101010111	0	- 1
(F2)	11110010	1101011101	0	1	1101011101	0	- 1
(F3)	11110011	1101011111	0	- 1	1101011111	0	1
(F4)	11110100	1101001001	0	1	1101001001	0	- 1
(F5)	11110101	1101001011	0	- 1	1101001011	0	1
(F6)	11110110	1101001110	0	- 1	1101001110	0	1
(F7)	11110111	1101011010	0	- 1	1101011010	0	1
(F8)	11111000	1111100101	2	- 1	0111100101	- 2	- 1
(F9)	11111001	1111100111	2	1	0111100111	- 2	1
(FA)	11111010	1111101101	2	1	0111101101	- 2	1
(FB)	11111011	1111101111	2	- 1	0111101111	- 2	- 1
(FC)	11111100	1111111001	2	1	0111111001	- 2	1
(FD)	11111101	1111111011	2	- 1	0111111011	- 2	- 1
(FE)	11111110	1111111110	2	- 1	0111111110	- 2	- 1
(FF)	11111111	1111101010	2	- 1	0111101010	- 2	- 1

Copyright International Organization for Standardization
Provided by IHS under license with ISO
No reproduction or networking permitted without license from IHS
Not for Resale

Annex D

(normative)

Measurement of bit shift

The tape to be measured shall have been written by the tape drive used for data interchange.

The tape shall have been written in any mode compatible with system operation.

D.1 Reading equipment

Reading equipment shall comprise a read head, a pre-amplifier, a rotary transformer and an integrator.

D.1.1 Read head

There are no absolute requirements for the output voltage of the read head. However, the read head, the pre-amplifier, the rotary transformer and the integrator shall be chosen so as to avoid problems due to a low signal-to-noise ratio.

gap length	0,19 μm ± 0,05 μm
track width	14,5 μm ± 1,5 μm
angle of the head gap	The gap in the head of the positive azimuth shall make an angle of $+20^{o}00' \pm 15'$ with the axis of the scanner. The gap in the head of the negative azimuth shall make an angle of $-10^{o}00' \pm 15'$ with the axis of the scanner.

D.1.2 Pre-amplifier and rotary transformer

The overall frequency response of the read head, the pre-amplifier and the rotary transformer shall have the following characteristics.

- from 1/100 of the ONEs frequency to 1,2 times the ONEs frequency the response shall be within 1 dB in amplitude response and within 5° in phase response.
- At 1/200 of the ONEs frequency shall be -3 dB relative to the response at 1/2 of the ONEs frequency.
- Below 1/200 of the ONEs frequency the response shall fall at a rate of 6 dB per octave.
- At 1,5 times the ONEs frequency the response shall be -3 dB relative to the response at 1/2 of the ONEs frequency.
- Above 1,5 times the ONEs frequency the response shall fall at a rate of 12 dB per octave.
- The damping coefficient of the input impedance of pre-amplifier on the read head shall be more than 0,7.

D.1.3 Integrator

The amplitude response of the integrator shall be within 1 dB of a line rising by 6 dB per octave from the ONEs frequency to 1/100 of the ONEs frequency.

D.2 Measurement

D.2.1 Test Pattern

Measurement shall be made over sections of helical tracks which display the sequence of flux transitions shown in figure D.1.

The first Reference Zero Crossing (RZC1) is a ONE zero crossing followed by two ONEs and two ZEROs.

The second Reference Zero Crossing (RZC2) occurs 11 bit cells after RZC1.

The first Test Zero Crossing (TZC1) occurs 5 bit cells after RZC1.

The second Test Zero Crossing (TZC2) occurs 1 bit cell after TZC1.

Copyright International Organization for Standardization
Provided by IHS under license with ISO
No reproduction or networking permitted without license from IHS Not for Resale

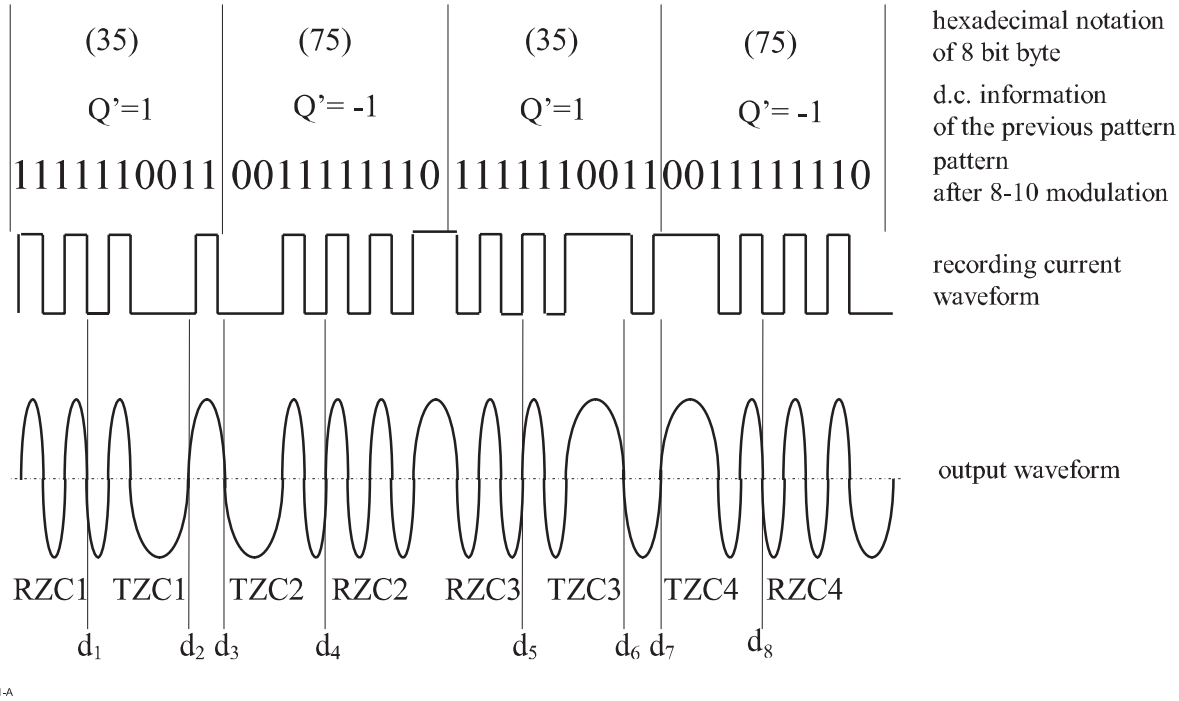

Figure D.1 - Test Pattern

D.2.2 Measurement of the average bit cell length

The average bit cell length shall be

$$L = \frac{d_4 - d_1}{11}$$

D.2.3 Calculation of bit shift

Bit shift at TZC1 shall be

$$\text{TZC1} = \frac{5L - \left(d_2 - d_1\right)}{L} \times 100\%$$

Bit shift at TZC2 shall be

$$\text{TZC2} = \frac{\left(d_3 - d_1\right) - 6L}{L} \times 100\%$$

To ensure that the asymmetrical effect of d.c. components are included, the measurements shall be repeated for the following inverted waveform.

The average bit cell length shall be

$$L = \frac{d_8 - d_5}{11}$$

Bit shift at TZC3 shall be

$$\text{TZC3} = \frac{5L - \left(d_6 - d_5\right)}{L} \times 100\%$$

Copyright International Organization for Standardization
Provided by IHS under license with ISO
No reproduction or networking permitted without license from IHS
Not for Resale

Bit shift at TZC4 shall be

$$\text{TZC4} = \frac{\left(d_7 - d_5\right) - 6L}{L} \times 100\%$$

The requirements of clause 12.5 shall be met for all measurements.

--`,,```,,,,````-`-`,,`,,`,`,,`---

Copyright International Organization for Standardization
Provided by IHS under license with ISO
No reproduction or networking permitted without license from IHS
Not for Resale

Annex E

(normative)

Measurement of track edge linearity tolerance

E.1 Condition

The test piece shall be secured under a longitudinal tension 0,10 N ± 0,02 N.

E.2 Procedure (figure E.1)

The following procedure shall be used:

– Place a line L_0 in contact with the track leading edge on the left side, with its longitudinal axis at an angle $\alpha = 4^o53' 42,1"$ with the Tape Reference Edge.

– Place a line L_1 parallel to L_0 in contact with the track leading edge on the right side.

– Measure the distance *d* between L_0 and L_1.

E.3 Requirement

The value *d* shall be within 5 µm.

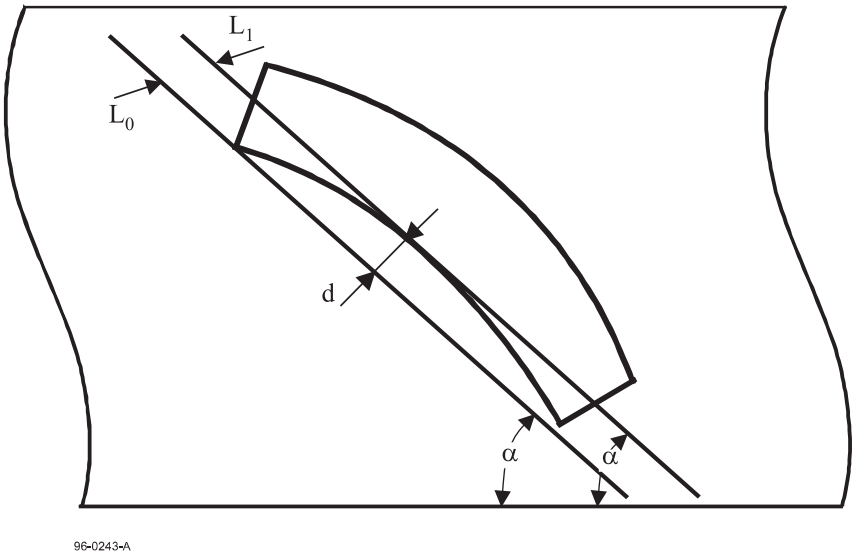

96-0243-A

Figure E.1 - Track edge linearity

--`,,```,,,,````-`-`,,`,,`,`,,`---
Copyright International Organization for Standardization
Provided by IHS under license with ISO
No reproduction or networking permitted without license from IHS
Not for Resale

Annex F

(informative)

Recommendations for transportation

F.1 Environment

It is recommended that during transportation the cartridges are kept within the following conditions:

temperature : -40 ^{o}C to 45 ^{o}C
relative humidity : 5% to 80%
wet bulb temperature : 26 ^{o}C max.

There shall be no condensation in or on the cartridge.

F.2 Hazards

Transportation of recorded cartridges involves three basic potential hazards.

F.2.1 Impact loads and vibrations

The following recommendations should minimize damage during transportation.

a) Avoid mechanical loads that would distort the cartridge shape.

b) Avoid dropping the cartridge more than 1m.

c) Cartridges should be fitted into a rigid box containing adequate shock-absorbent material.

d) The final box must have a clean interior and a construction that provides sealing to prevent the ingress of dirt and water.

e) The orientation of the cartridges within the final box should be such that the axis of the tape reels are horizontal.

f) The final box should be clearly marked to indicate its correct orientation.

F.2.2 Extremes of temperature and humidity

a) Extreme changes in temperature and humidity should be avoided whenever possible.

b) Whenever a cartridge is received it should be conditioned in the operating environment for a period of at least 24 h.

F.2.3 Effects of stray magnetic fields

A nominal spacing of not less than 80 mm should exist between the cartridges and the outer surface of the shipping container. This should minimize the risk of corruption.

--`,,```,,,,````-`-`,,`,,`,`,,`---

Copyright International Organization for Standardization
Provided by IHS under license with ISO
No reproduction or networking permitted without license from IHS Not for Resale

Annex G

(informative)

Example of the content of a Data Block in the System Area

Table G.1 shows an example of the content of a Data Block in the System Area. In table G.1, byte 0 to byte 2 047 means data bytes in the Data Block in the System Area. In a Partitioned tape, the content of a Data Block in the System Area is related to the Partition in which the block is located.

Table G.1 - An example of the content of a Data Block in the System Area

Byte Positions	Length in Bytes	Description of contents
0 to 7	8	The number of positive azimuth tracks written on the tape between the 7th previous update of the System Log and the 6th previous update.
8 to 15	8	The number of negative azimuth tracks written on the tape between the 7th previous update of the System Log and the 6th previous update.
16 to 23	8	The number of positive azimuth tracks read from the tape between the 7th previous update of the System Log and the 6th previous update.
24 to 31	8	The number of negative azimuth tracks read from the tape between the 7th previous update of the System Log and the 6th previous update.
32 to 39	8	The number of write error blocks with positive azimuth tracks written on the tape between the 7th previous update of the System Log and the 6th previous update.
40 to 47	8	The number of write error blocks with negative azimuth tracks written on the tape between the 7th previous update of the System Log and the 6th previous update.
48 to 55	8	The number of read error blocks with positive azimuth tracks read from the tape between the 7th previous update of the System Log and the 6th previous update.
56 to 63	8	The number of read error blocks with negative azimuth tracks read from the tape between the 7th previous update of the System Log and the 6th previous update.
64 to 71	8	The number of read error blocks with positive azimuth tracks read from the System Log area on the tape between the 7th previous update of the System Log and the 6th previous update.
72 to 79	8	The number of read error blocks with negative azimuth tracks read from the System Log area on the tape between the 7th previous update of the System Log and the 6th previous update.
80 to 87	8	The number of positive azimuth tracks written on the tape between the 6th previous update of the System Log and the 5th previous update.

--`,,```,,,,````-`-`,,`,,`,`,,`---
Copyright International Organization for Standardization
Provided by IHS under license with ISO
No reproduction or networking permitted without license from IHS
Not for Resale

88 to 95	8	The number of negative azimuth tracks written on the tape between the 6th previous update of the System Log and the 5th previous update.
96 to 103	8	The number of positive azimuth tracks read from the tape between the 6th previous update of the System Log and the 5th previous update.
104 to 111	8	The number of negative azimuth tracks read from the tape between the 6th previous update of the System Log and the 5th previous update.
112 to 119	8	The number of write error blocks with positive azimuth tracks written on the tape between the 6th previous update of the System Log and the 5th previous update.
120 to 127	8	The number of write error blocks with negative azimuth tracks written on the tape between the 6th previous update of the System Log and the 5th previous update.
128 to 135	8	The number of read error blocks with positive azimuth tracks read from the tape between the 6th previous update of the System Log and the 5th previous update.
136 to 143	8	The number of read error blocks with negative azimuth tracks read from the tape between the 6th previous update of the System Log and the 5th previous update.
144 to 151	8	The number of read error blocks with positive azimuth tracks read from the System Log area on the tape between the 6th previous update of the System Log and the 5th previous update.
152 to 159	8	The number of read error blocks with negative azimuth tracks read from the System Log area on the tape between the 6th previous update of the System Log and the 5th previous update.
160 to 167	8	The number of positive azimuth tracks written on the tape between the 5th previous update of the System Log and the 4th previous update.
168 to 175	8	The number of negative azimuth tracks written on the tape between the 5th previous update of the System Log and the 4th previous update.
176 to 183	8	The number of positive azimuth tracks read from the tape between the 5th previous update of the System Log and the 4th previous update.
184 to 191	8	The number of negative azimuth tracks read from the tape between the 5th previous update of the System Log and the 4th previous update.
192 to 199	8	The number of write error blocks with positive azimuth tracks written on the tape between the 5th previous update of the System Log and the 4th previous update.

Copyright International Organization for Standardization
Provided by IHS under license with ISO
No reproduction or networking permitted without license from IHS
Not for Resale

200 to 207	8	The number of write error blocks with negative azimuth tracks written on the tape between the 5th previous update of the System Log and the 4th previous update.
208 to 215	8	The number of read error blocks with positive azimuth tracks read from the tape between the 5th previous update of the System Log and the 4th previous update.
216 to 223	8	The number of read error blocks with negative azimuth tracks read from the tape between the 5th previous update of the System Log and the 4th previous update.
224 to 231	8	The number of read error blocks with positive azimuth tracks read from the System Log area on the tape between the 5th previous update of the System Log and the 4th previous update.
232 to 239	8	The number of read error blocks with negative azimuth tracks read from the System Log area on the tape between the 5th previous update of the System Log and the 4th previous update.
240 to 247	8	The number of positive azimuth tracks written on the tape between the 4th previous update of the System Log and the 3rd previous update.
248 to 255	8	The number of negative azimuth tracks written on the tape between the 4th previous update of the System Log and the 3rd previous update.
256 to 263	8	The number of positive azimuth tracks read from the tape between the 4th previous update of the System Log and the 3rd previous update.
264 to 271	8	The number of negative azimuth tracks read from the tape between the 4th previous update of the System Log and the 3rd previous update.
272 to 279	8	The number of write error blocks with positive azimuth tracks written on the tape between the 4th previous update of the System Log and the 3rd previous update.
280 to 287	8	The number of write error blocks with negative azimuth tracks written on the tape between the 4th previous update of the System Log and the 3rd previous update.
288 to 295	8	The number of read error blocks with positive azimuth tracks read from the tape between the 4th previous update of the System Log and the 3rd previous update.
296 to 303	8	The number of read error blocks with negative azimuth tracks read from the tape between the 4th previous update of the System Log and the 3rd previous update.
304 to 311	8	The number of read error blocks with positive azimuth tracks read from the System Log area on the tape between the 4th previous update of the System Log and the 3rd previous update.

--`,,```,,,,````-`-`,,`,,`,`,,`---
Copyright International Organization for Standardization
Provided by IHS under license with ISO
No reproduction or networking permitted without license from IHS
Not for Resale

312 to 319	8	The number of read error blocks with negative azimuth tracks read from the System Log area on the tape between the 4th previous update of the System Log and the 3rd previous update.
320 to 327	8	The number of positive azimuth tracks written on the tape between the 3rd previous update of the System Log and the 2nd previous update.
328 to 335	8	The number of negative azimuth tracks written on the tape between the 3rd previous update of the System Log and the 2nd previous update.
336 to 343	8	The number of positive azimuth tracks read from the tape between the 3rd previous update of the System Log and the 2nd previous update.
344 to 351	8	The number of negative azimuth tracks read from the tape between the 3rd previous update of the System Log and the 2nd previous update.
352 to 359	8	The number of write error blocks with positive azimuth tracks written on the tape between the 3rd previous update of the System Log and the 2nd previous update.
360 to 367	8	The number of write error blocks with negative azimuth tracks written on the tape between the 3rd previous update of the System Log and the 2nd previous update.
368 to 375	8	The number of read error blocks with positive azimuth tracks read from the tape between the 3rd previous update of the System Log and the 2nd previous update.
376 to 383	8	The number of read error blocks with negative azimuth tracks read from the tape between the 3rd previous update of the System Log and the 2nd previous update.
384 to 391	8	The number of read error blocks with positive azimuth tracks read from the System Log area on the tape between the 3rd previous update of the System Log and the 2nd previous update.
392 to 399	8	The number of read error blocks with negative azimuth tracks read from the System Log area on the tape between the 3rd previous update of the System Log and the 2nd previous update.
400 to 407	8	The number of positive azimuth tracks written on the tape between the 2nd previous update of the System Log and the last previous update.
408 to 415	8	The number of negative azimuth tracks written on the tape between the 2nd previous update of the System Log and the last previous update.
416 to 423	8	The number of positive azimuth tracks read from the tape between the 2nd previous update of the System Log and the last previous update.
424 to 431	8	The number of negative azimuth tracks read from the tape between the 2nd previous update of the System Log and the last previous update.

--`,,```,,,,````-`-`,,`,,`,`,,`---
Copyright International Organization for Standardization
Provided by IHS under license with ISO
No reproduction or networking permitted without license from IHS
Not for Resale

432 to 439	8	The number of write error blocks with positive azimuth tracks written on the tape between the 2nd previous update of the System Log and the last previous update.
440 to 447	8	The number of write error blocks with negative azimuth tracks written on the tape between the 2nd previous update of the System Log and the last previous update.
448 to 455	8	The number of read error blocks with positive azimuth tracks read from the tape between the 2nd previous update of the System Log and the last previous update.
456 to 463	8	The number of read error blocks with negative azimuth tracks read from the tape between the 2nd previous update of the System Log and the last previous update.
464 to 471	8	The number of read error blocks with positive azimuth tracks read from the System Log area on the tape between the 2nd previous update of the System Log and the last previous update.
472 to 479	8	The number of read error blocks with negative azimuth tracks read from the System Log area on the tape between the 2nd previous update of the System Log and the last previous update.
480 to 487	8	The number of positive azimuth tracks written on the tape since the last previous update.
488 to 495	8	The number of negative azimuth tracks written on the tape since the last previous update.
496 to 503	8	The number of positive azimuth tracks read from the tape since the last previous update.
504 to 511	8	The number of negative azimuth tracks read from the tape since the last previous update.
512 to 519	8	The number of write error blocks with positive azimuth tracks written on the tape since the last previous update.
520 to 527	8	The number of write error blocks with negative azimuth tracks written on the tape since the last previous update.
528 to 535	8	The number of read error blocks with positive azimuth tracks read from the tape since the last previous update.
536 to 543	8	The number of read error blocks with negative azimuth tracks read from the tape since the last previous update.
544 to 551	8	The number of read error blocks with positive azimuth tracks read from the System Log area on the tape since the last previous update.
552 to 559	8	The number of read error blocks with negative azimuth tracks read from the System Log area on the tape since the last previous update.
560 to 567	8	The number of total written frames.
568 to 575	8	The number of total read frames.
576 to 583	8	The number of total write error blocks.
584 to 591	8	The number of total read error blocks.
592 to 599	8	The number of total read error blocks read from the System Log area on the tape.

--`,,```,,,,````-`-`,,`,,`,`,,`---

Copyright International Organization for Standardization
Provided by IHS under license with ISO
No reproduction or networking permitted without license from IHS Not for Resale

600 to 607	8	The position of the EOD frame.
608 to 615	8	The Logical Record Address of the last Logical Record.
616 to 623	8	The number of frames that can be written on the tape.
624 to 655	32	Name of the manufacturer of the drive that updated the System Log the sixth previous time.
656 to 687	32	Model number or identifier of the drive that updated the System Log the sixth previous time.
688 to 719	32	Serial number assigned to the drive that updated the System Log the sixth previous time.
720 to 735	16	Revision number of the drive software that updated the System Log the sixth previous time.
736 to 751	16	Revision number of the drive hardware that updated the System Log the sixth previous time.
752 to 767	16	Date and time that the System Log was updated the sixth previous time.
768 to 799	32	Name of the manufacturer of the drive that updated the System Log the fifth previous time.
800 to 831	32	Model number or identifier of the drive that updated the System Log the fifth previous time.
832 to 863	32	Serial number assigned to the drive that updated the System Log the fifth previous time.
864 to 879	16	Revision number of the drive software that updated the System Log the fifth previous time.
880 to 895	16	Revision number of the drive hardware that updated the System Log the fifth previous time.
896 to 911	16	Date and time that the System Log was updated the fifth previous time.
912 to 943	32	Name of the manufacturer of the drive that updated the System Log the fourth previous time.
944 to 975	32	Model number or identifier of the drive that updated the System Log the fourth previous time.
976 to 1 007	32	Serial number assigned to the drive that updated the System Log the fourth previous time.
1 008 to 1 023	16	Revision number of the drive software that updated the System Log the fourth previous time.
1 024 to 1 039	16	Revision number of the drive hardware that updated the System Log the fourth previous time.
1 040 to 1 055	16	Date and time that the System Log was updated the fourth previous time.
1 056 to 1 087	32	Name of the manufacturer of the drive that updated the System Log the third previous time.
1 088 to 1 119	32	Model number or identifier of the drive that updated the System Log the third previous time.
1 120 to 1 151	32	Serial number assigned to the drive that updated the System Log the third previous time.
1 152 to 1 167	16	Revision number of the drive software that updated the System Log the third previous time.

--`,,```,,,,````-`-`,,`,,`,`,,`---

Copyright International Organization for Standardization
Provided by IHS under license with ISO
No reproduction or networking permitted without license from IHS
Not for Resale

1 168 to 1 183	16	Revision number of the drive hardware that updated the System Log the third previous time.
1 184 to 1 199	16	Date and time that the System Log was updated the third previous time.
1 200 to 1 231	32	Name of the manufacturer of the drive that updated the System Log the second previous time.
1 232 to 1 263	32	Model number or identifier of the drive that updated the System Log the second previous time.
1 264 to 1 295	32	Serial number assigned to the drive that updated the System Log the second previous time.
1 296 to 1 311	16	Revision number of the drive software that updated the System Log the second previous time.
1 312 to 1 327	16	Revision number of the drive hardware that updated the System Log the second previous time.
1 328 to 1 343	16	Date and time that the System Log was updated the second previous time.
1 344 to 1 375	32	Name of the manufacturer of the drive that updated the System Log the last previous time.
1 376 to 1 407	32	Model number or identifier of the drive that updated the System Log the last previous time.
1 408 to 1 439	32	Serial number assigned to the drive that updated the System Log the last previous time.
1 440 to 1 455	16	Revision number of the drive software that updated the System Log the last previous time.
1 456 to 1 471	16	Revision number of the drive hardware that updated the System Log the last previous time.
1 472 to 1 487	16	Date and time that the System Log was updated the last previous time.
1 488 to 1 519	32	Name of the manufacturer of the drive that is currently updating the System Log.
1 520 to 1 551	32	Model number or identifier of the drive that is currently updating the System Log.
1 552 to 1 583	32	Serial number assigned to the drive that is currently updating the System Log.
1 584 to 1 599	16	Revision number of the drive software that is currently updating the System Log.
1 600 to 1 615	16	Revision number of the drive hardware that is currently updating the System Log.
1 616 to 1 631	16	Date and time that is currently updating the System Log..
1 632 to 1 663	32	Name of the manufacturer of the drive that initialized the tape.
1 664 to 1 695	32	Model number or identifier of the drive that initialized the tape.

Copyright International Organization for Standardization
Provided by IHS under license with ISO
No reproduction or networking permitted without license from IHS Not for Resale

1 696 to 1 727	32	Serial number assigned to the drive that initialized the tape.
1 728 to 1 743	16	Revision number of the drive software that initialized the tape.
1 744 to 1 759	16	Revision number of the drive hardware that initialized the tape.
1 760 to 1 775	16	Date and time that the tape was initialized.
1 776 to 1 783	8	The number of times the tape has been loaded.
1 784 to 1 785	2	All bytes set to ZERO.
1 786 to 2047	262	Manufacturer’s data.

Copyright International Organization for Standardization
Provided by IHS under license with ISO
No reproduction or networking permitted without license from IHS
Not for Resale

ICS 35.220.20

Descriptors: data processing, information interchange, data recording, magnetic recording, helical scan recording, data recording devices, magnetic tapes, 8 mm magnetic tapes, magnetic tape cartridges, specifications, dimensions, physical properties, mechanical properties, magnetic properties, recording characteristics, recording tracks, tracks formats, interchangeability.

Price based on 87 pages

Copyright International Organization for Standardization
Provided by IHS under license with ISO
No reproduction or networking permitted without license from IHS Not for Resale