INTERNATIONAL STANDARD

ISO/IEC 15521

First edition
1998-06-01

Information technology — 3,81 mm wide magnetic tape cartridge for information interchange — Helical scan recording — DDS-3 format using 125 m length tapes

Technologies de l'information — Cartouche de bande magnétique de 3,81 mm *de large pour l'échange d'information — Enregistrement par balayage en spirale — Format DDS-3 utilisant des bandes de* 125 m *de long*

Reference number
ISO/IEC 15521:1998(E)

Copyright International Organization for Standardization
Provided by IHS under license with ISO
No reproduction or networking permitted without license from IHS

Not for Resale

Contents

1 Scope 1

2 Conformance 1

2.1 Magnetic tape cartridge 1
2.2 Generating drive 1
2.3 Receiving drive 1

3 Normative References 2

4 Definitions 2

4.1 Absolute Frame Number (AFN) 2
4.2 a.c. erase 2
4.3 Access Point 2
4.4 algorithm 2
4.5 Area ID 2
4.6 Average Signal Amplitude 2
4.7 azimuth 2
4.8 back surface 2
4.9 byte 2
4.10 cartridge 2
4.11 Channel bit 2
4.12 Codeword 2
4.13 Data Format ID 3
4.14 Early Warning Point (EWP) 3
4.15 End of Data (EOD) 3
4.16 Entity 3
4.17 Error Correcting Code (ECC) 3
4.18 flux transition position 3
4.19 flux transition spacing 3
4.20 Fragment 3
4.21 Frame 3
4.22 Housekeeping Frame 3
4.23 Logical Beginning of Tape (LBOT) 3
4.24 magnetic tape 3
4.25 Master Standard Amplitude Calibration Tape 3
4.26 Master Standard Reference Tape 3
4.27 Optimum Recording Field 3
4.28 Partition Boundary 3
4.29 Physical Beginning of Tape (PBOT) 3
4.30 Physical End of Tape (PEOT) 3
4.31 physical recording density 3
4.32 pre-recording condition 3
4.33 processing 3
4.34 processed data 3
4.35 Processed Record 3
4.36 Processed Record Sequence 3

© ISO/IEC 1998

All rights reserved. Unless otherwise specified, no part of this publication may be reproduced or utilized in any form or by any means, electronic or mechanical, including photocopying and microfilm, without permission in writing from the publisher.

ISO/IEC Copyright Office • Case postale 56 • CH-1211 Genève 20 • Switzerland
Printed in Switzerland

Copyright International Organization for Standardization
Provided by IHS under license with ISO
No reproduction or networking permitted without license from IHS
Not for Resale

4.37 record 3
4.38 Reference Recording Field 3
4.39 reprocessing 4
4.40 Secondary Standard Amplitude Calibration Tape 4
4.41 Secondary Standard Reference Tape 4
4.42 Separator Mark 4
4.43 Standard Reference Amplitude 4
4.44 Tape Reference Edge 4
4.45 Test Recording Current 4
4.46 track 4
4.47 unprocessed data 4
4.48 Unprocessed Record 4
4.49 Virtual End of Tape (VEOT) 4

5 Conventions and Notations 4

6 Acronyms 4

7 Environment and safety 5
7.1 Testing environment 5
7.2 Operating environment 5
7.3 Storage environment 5
7.4 Transportation 5
7.5 Safety 5
7.6 Flammability 5

8 Dimensional and mechanical characteristics of the case 6
8.1 General 6
8.2 Overall dimensions 6
8.3 Loading grip 7
8.4 Holding areas 7
8.5 Notches of the lid 7
8.6 Lid dimensions 7
8.7 Optical detection of the beginning and end of tape 8
8.8 Bottom side 8
8.8.1 Locking mechanism of the slider 9
8.8.2 Access holes 9
8.8.3 Recognition, sub-datums, and write-inhibit holes 9
8.8.4 Datum holes 11
8.8.5 Access room for tape guides 11
8.8.6 Holes for accessing the hubs 11
8.8.7 Internal structure of the lower half 12
8.8.8 Light path 13
8.8.9 Support Areas 13
8.8.10 Datum Areas 13
8.8.11 Relationship between Support and Datum Areas and Reference Plane Z 13
8.9 Hubs 13
8.10 Attachment of leader and trailer tapes 14
8.11 Interface between the hubs and the drive spindles 14
8.12 Opening of the lid 14
8.13 Release of the hub locking mechanism 14
8.14 Label areas 15
8.15 Requirement for autoloaders 15

9 Mechanical, physical and dimensional characteristics of the tape 27

Copyright International Organization for Standardization
Provided by IHS under license with ISO
No reproduction or networking permitted without license from IHS Not for Resale

9.1 Materials 27
9.2 Tape length 27
9.2.1 Length of magnetic tape 27
9.2.2 Length of leader and trailer tapes 27
9.2.3 Length of splicing tapes 27
9.3 Tape width 27
9.3.1 Width of magnetic tape 27
9.3.2 Width of leader and trailer tapes 27
9.3.3 Width and position of splicing tape 27
9.3.4 Edge weave 27
9.4 Discontinuities 29
9.5 Tape thickness 29
9.5.1 Thickness of magnetic tape 29
9.5.2 Thickness of leader and trailer tape 29
9.5.3 Thickness of splicing tape 29
9.6 Longitudinal curvature 29
9.7 Cupping 29
9.8 Coating adhesion 29
9.9 Layer-to-layer adhesion 30
9.10 Tensile strength 30
9.10.1 Breaking strength 30
9.10.2 Yield strength 30
9.11 Residual elongation 30
9.12 Flexural rigidity 31
9.13 Electrical resistance of coated surfaces 31
9.14 Light transmittance of the tape 32
9.15 Media Recognition System (MRS) 32

10 Magnetic recording characteristics 33
10.1 Optimum Recording Field 34
10.2 Signal Amplitude 34
10.3 Resolution 34
10.4 Overwrite 34
10.5 Ease of erasure 34
10.6 Tape quality 34
10.6.1 Missing pulses 34
10.6.2 Missing pulse zone 35
10.7 Signal-to-Noise Ratio (SNR) characteristic 35

11 Format 36
11.1 General 36
11.2 Basic Groups 36
11.2.1 Entity 37
11.2.2 Group Information Table 38
11.2.3 Block Access Table (BAT) 39
11.3 Sub-Groups 42
11.3.1 G1 Sub-Group 42
11.3.2 G2 Sub-Group - randomizing 42
11.3.3 G3 Sub-Group 43
11.3.4 G4 Sub-Group 44
11.3.5 Main Data Fragment 48
11.3.6 Summary of the transformation of a Basic Group 50
11.4 Sub code Information 50

Copyright International Organization for Standardization
Provided by IHS under license with ISO
No reproduction or networking permitted without license from IHS
Not for Resale

11.4.1 Pack Item Number 0 50
11.4.2 Pack Item Number 1 50
11.4.3 Pack Item Number 2 51
11.4.4 Pack Item Number 3 51
11.4.5 Pack Item Number 4 51
11.4.6 Pack Item Number 5 52
11.4.7 Pack Item Number 6 52
11.4.8 Pack Item Number 7 53
11.4.9 Pack Item Number 8 53
11.4.10 Pack Item Number 9 54
11.4.11 Pack Item Number 10 54
11.4.12 Pack Item Number 11 54
11.4.13 Pack Item Number 12 55
11.4.14 Pack Item Number 13 55
11.4.15 Pack Item Number 14 56
11.4.16 Pack Item Number 15 56
11.5 Sub code location 56
11.5.1 Sub code Pack Items on a Single Data Space tape 56
11.5.2 Sub code Pack Items on a partitioned tape 57

12 Method of recording 57
12.1 Physical recording density 57
12.2 Long-term average bit cell length 57
12.3 Short-term average bit cell length 57
12.4 Rate of change 57
12.5 Bit shift 57
12.6 Read signal amplitude 57
12.7 Maximum recorded levels 57

13 Track geometry 58
13.1 Track configuration 58
13.2 Average track pitch 58
13.3 Variations of the track pitch 58
13.4 Track width 58
13.5 Track angle 59
13.6 Track edge linearity 59
13.7 Track length 59
13.8 Ideal tape centreline 59
13.9 Azimuth angles 59

14 Recorded patterns 59
14.1 Recorded Main Data Fragment 59
14.2 Preamble Zone, Margin Zones 59

15 Format of a track 59
15.1 Format of a track 59
15.2 Positioning accuracy 60
15.3 Tracking scheme 60

16 Layout of a Single Data Space tape 60
16.1 Device Area 61
16.2 Reference Area 61
16.3 Position Tolerance Band No. 1 61
16.4 System Area 61
16.4.1 System Preamble 61

Copyright International Organization for Standardization
Provided by IHS under license with ISO
No reproduction or networking permitted without license from IHS
Not for Resale

16.4.2 System Log 62
16.4.3 System Postamble 62
16.4.4 Position Tolerance Band No. 2 62
16.4.5 Vendor Group Preamble 62
16.5 Data Area 62
16.5.1 Vendor Group 62
16.5.2 Recorded Data Group 62
16.5.3 ECC3 62
16.5.4 Repeated Frames 63
16.5.5 Appending and overwriting 63
16.6 EOD Area 65
16.7 Post-EOD Area 65
16.8 Early Warning Point - (EWP) 66
16.9 Initialization 66

17 Layout of a partitioned tape 66
17.1 Overall magnetic tape layout 67
17.1.1 Device Area 67
17.1.2 Partition 1 67
17.1.3 Partition 0 68
17.2 Area ID 68
17.3 System Area Pack Items No. 3 and No. 4 68
17.4 Empty partitions 68
17.4.1 Empty partition 1 69
17.4.2 Empty partition 0 69
17.5 Initialization of partitioned tapes 69

18 Housekeeping Frames 69
18.1 Amble Frames 69
18.2 System Log Frames 69
18.3 Tape Management Frames 69

Annexes
A - Measurement of the light transmittance of the prisms 72
B - Measurement of light transmittance of tape and leaders 74
C - Measurement of Signal-to-Noise Ratio 77
D - Method for determining the nominal and the maximum allowable recorded levels 78
E - Representation of 8-bit bytes by 10-bit patterns 79
F - Measurement of bit shift 91
G - Measurement of track edge linearity 93
H - Recognition Holes 94
J - Means to open the lid 95
K - Recommendations for transportation 97
L - Read-After-Write. 98
M - Example of the content of a Basic Group No. 0. 99

Copyright International Organization for Standardization
Provided by IHS under license with ISO
No reproduction or networking permitted without license from IHS Not for Resale

Foreword

ISO (the International Organization for Standardization) and IEC (the International Electrotechnical Commission) form the specialized system for worldwide standardization. National Bodies that are members of ISO or IEC participate in the development of International Standards through technical committees established by the respective organization to deal with particular fields of technical activity. ISO and IEC technical committees collaborate in fields of mutual interest. Other international organizations, governmental and non-governmental, in liaison with ISO and IEC, also take part in the work.

In the field of information technology, ISO and IEC have established a joint technical committee, ISO/IEC JTC 1. Draft International Standards adopted by the joint technical committee are circulated to national bodies for voting. Publication as an International Standard requires approval by at least 75 % of the national bodies casting a vote.

International Standard ISO/IEC 15521 was prepared by JISC (as Standard JIS X.6130-1996) with document support and contribution from ECMA and was adopted, under a special "fast-track procedure" by joint Technical Committee ISO/IEC JTC 1, *Information technology*, in parallel with its approval by national bodies of ISO and IEC.

Annexes A, B, C, D, E, F and G form an integral part of this International Standard. Annexes H, J, K, L and M are for information only.

Copyright International Organization for Standardization
Provided by IHS under license with ISO
No reproduction or networking permitted without license from IHS
Not for Resale

Information technology — 3,81 mm wide magnetic tape cartridge for information interchange — Helical scan recording — DDS-3 format using 125 m length tapes

1 Scope

This International Standard specifies the physical and magnetic characteristics of a 3,81 mm wide magnetic tape cartridge to enable physical interchangeability of such cartridges between drives. It also specifies the quality of the recorded signals, the recording method and the recorded format - called Digital Data Storage (DDS) - thereby allowing data interchange between drives by means of such magnetic tape cartridges.

Information interchange between systems also requires, at a minimum, agreement between the interchange parties upon the interchange code(s) and the specifications of the structure and labelling of the information on the interchanged cartridge.

Under information interchange circumstances in which a processing algorithm, e.g. for lossless data compression as specified in ISO/IEC 11558, is applied to the host data prior to recording on the tape and a complementary reprocessing algorithm is applied after the data is read from the tape, agreement upon these by the interchange parties is also required.

2 Conformance

2.1 Magnetic tape cartridge

A tape cartridge shall be in conformance with this International Standard if it meets all the mandatory requirements specified herein. The tape requirements shall be satisfied throughout the extent of the tape.

For each recorded Entity any algorithm for lossless data compression used for processing the data therein shall have been registered, and according to ISO/IEC 11576 the corresponding numerical identifier shall be recorded in Byte No. 3 of the Entity Header.

2.2 Generating drive

A drive generating a magnetic tape cartridge for interchange shall be in conformance with this International Standard if all recordings on the tape meet the mandatory requirements of this International Standard, and if either or both methods of appending and overwriting are implemented.

A claim of conformance shall state which of the following optional features are implemented and which are not

- the performing of a Read-After-Write check and the recording of any necessary repeated frames;
- the generation of ECC3 Frames.

In addition a claim of conformance shall state

- whether or not one, or more, registered algorithm(s) are implemented within the system and are able to process data received from the host prior to collecting the data into Basic Groups, and
- the algorithm registration identification number(s) of the implemented algorithm(s).

2.3 Receiving drive

A drive receiving a magnetic tape cartridge for interchange shall be in conformance with this International Standard if it is able to handle any recording made on the tape according to this International Standard. In particular it shall

- be able to recognize repeated frames and to make available to the host, data and Separator Marks from only one of these frames;
- be able to recognize an ECC3 frame, and ignore it if the system is not capable of using ECC3 check bytes in a process of error correction;
- be able to recognize processed data within an Entity, identify the algorithm used, and make the algorithm registration number available to the host;
- be able to make processed data available to the host.

In addition a claim of conformance shall state

- whether or not the system is capable of using ECC3 check bytes in a process of error correction;

Copyright International Organization for Standardization
Provided by IHS under license with ISO
No reproduction or networking permitted without license from IHS Not for Resale

- whether or not one or more reprocessing algorithm(s) are implemented within the system, and are able to be applied to processed data prior to making such data available to the host;
- the algorithm registration number(s) of the processing algorithm(s) for which a complementary reprocessing algorithm is implemented.

3 Normative References

The following standards contain provisions which, through reference in this text, constitute provisions of this International Standard. At the time of publication, the editions indicated were valid. All standards are subject to revision, and parties to agreements based on this International Standard are encouraged to investigate the possibility of applying the most recent editions of standards indicated below. Members of IEC and ISO maintain registers of currently valid International Standards.

ISO 527 (all parts), *Plastics — Determination of tensile properties.*

ISO 1302:1992, *Technical drawings — Method of indicating surface texture.*

ISO/IEC 11557:1992, *Information technology — 3,81mm wide magnetic tape cartridge for information interchange — Helical scan recording — DDS-DC format using 60 m and 90 m length tapes.*

ISO/IEC 11576:1994, *Information technology — Procedure for the registration of algorithms for the lossless compression of data.*

ISO/IEC 12247:1993, *Information technology — 3,81mm wide magnetic tape cartridge for information interchange — Helical scan recording — DDS format using 60 m and 90 m length tapes.*

ISO/IEC 13923:1996, *Information technology — 3,81 mm wide magnetic tape cartridge for information interchange — Helical scan recording — DDS-2 format using 120 m length tape.*

IEC 950:1991, *Safety of information technology equipment including electrical business equipment.*

IEC 1119-1:1992, *Digital audio tape cassette system (DAT) — Part 1: Dimensions and characteristics.*

4 Definitions

For the purposes of this International Standard, the following definitions apply.

4.1 Absolute Frame Number (AFN): A sequence number, encoded in the Frame.

4.2 a.c. erase: A process of erasure utilising magnetic fields of decaying intensity.

4.3 Access Point: A point, at the start of a Processed Record Sequence, at which the presentation of Codewords to a reprocessing algorithm is required to start, regardless of whether the data of interest in a retrieval operation starts at that point or at a subsequent point.

4.4 algorithm: A set of rules for transforming the logical representation of data.

4.5 Area ID: An identifier defining the area of the tape and specifying the types of Frame written.

4.6 Average Signal Amplitude: The average peak-to-peak value of the output signal from the read head at the fundamental frequency of the specified physical recording density over a minimum of 7,8 mm of track, exclusive of missing pulses.

4.7 azimuth: The angular deviation, in degrees, minutes and seconds of arc, made by the mean flux transition line with the line normal to the centreline of the recorded track.

4.8 back surface: The surface of the tape opposite to the magnetic coating which is used to record data.

4.9 byte: An ordered set of bits acted upon as a unit.

4.10 cartridge: A case containing magnetic tape stored on twin hubs.

4.11 Channel bit: A bit after 8-10 transformation.

Copyright International Organization for Standardization
Provided by IHS under license with ISO
No reproduction or networking permitted without license from IHS Not for Resale

4.12 Codeword: A word which is generated by a processing algorithm. The number of bits in a Codeword is variable, and is not defined by this International Standard.

4.13 Data Format ID: An identifier specifying which data format is being used on the tape.

4.14 Early Warning Point (EWP): A point along the length of the tape at which warning is given of the approach, in the forward direction of tape motion, of the Partition Boundary or of the Physical End of Tape.

4.15 End of Data (EOD): The point on the tape at the end of the group which contains the last user data.

4.16 Entity: A unit of recorded data, comprising an Entity header and a Processed Record Sequence.

4.17 Error Correcting Code (ECC): A mathematical computation yielding check bytes used for the detection and correction of errors.

4.18 flux transition position: That point which exhibits maximum free-space flux density normal to the tape surface.

4.19 flux transition spacing: The distance along a track between successive flux transitions.

4.20 Fragment: A collection of bytes which are treated as a unit for recording, readback and error correction purposes.

4.21 Frame: A pair of adjacent tracks with azimuths of opposite polarity, in which the track with the positive azimuth precedes that with the negative azimuth.

4.22 Housekeeping Frame: A Frame which contains no user data and which is identified as such by the values in the data fields therein.

4.23 Logical Beginning of Tape (LBOT): The point along the length of the tape where a recording of data for interchange commences.

4.24 magnetic tape: A tape which will accept and retain the magnetic signals intended for input, output and storage purposes on computers and associated equipment.

4.25 Master Standard Amplitude Calibration Tape: A pre-recorded tape on which the standard signal amplitudes have been recorded in the tracks of positive azimuth, 21,0 µm wide, recorded at a track pitch of 27,2 µm, on an a.c. erased tape.

Note 1 - The tape is recorded with the nominal physical recording densities of 4 499,8 ftpmm, 2 999,9 ftpmm, 1 999,9 ftpmm and 1 499,9 ftpmm.

Note 2 - The Master Standard Amplitude Calibration Tape has been established by Reliability Centre for Electronic Components of Japan (RCJ).

4.26 Master Standard Reference Tape: A tape selected as the standard for Reference Recording Field, Signal Amplitude, Resolution, Overwrite and Signal-to-Noise Ratio.

Note - The Master Standard Reference Tape has been established by RCJ.

4.27 Optimum Recording Field: In the plot of Average Signal Amplitude against the recording field at the physical recording density of 2 999,9 ftpmm, the field that causes the maximum Average Signal Amplitude.

4.28 Partition Boundary: The point along the length of a magnetic tape at which partition 1 ends and partition 0 commences.

4.29 Physical Beginning of Tape (PBOT): The point where the leader tape is joined to the magnetic tape.

4.30 Physical End of Tape (PEOT): The point where the trailer tape is joined to the magnetic tape.

4.31 physical recording density: The number of recorded flux transitions per unit length of track, expressed in flux transitions per millimetre (ftpmm).

4.32 pre-recording condition: The recording levels above which a tape intended for interchange shall not previously have been recorded.

4.33 processing: The use of an algorithm to transform host data into Codewords.

4.34 processed data: A sequence of Codewords which results from the application of processing to data.

4.35 Processed Record: A sequence of Codewords which results from the application of processing to an Unprocessed Record.

4.36 Processed Record Sequence: A sequence of one or more Processed Records which starts on an 8-bit boundary and ends on a subsequent 8-bit boundary.

4.37 record: Related data treated as a unit of information.

4.38 Reference Recording Field: The Optimum Recording Field of the Master Standard Reference Tape.

Copyright International Organization for Standardization
Provided by IHS under license with ISO
No reproduction or networking permitted without license from IHS Not for Resale

4.39 reprocessing: The use of an algorithm to transform Codewords into data as required by the host.

4.40 Secondary Standard Amplitude Calibration Tape: A tape pre-recorded as defined for the Master Standard Amplitude Calibration Tape; the outputs are known and stated in relation to those of the Master Standard Amplitude Calibration Tape.

Note - Secondary Standard Amplitude Calibration Tapes can be ordered from RCJ, 1-1-12 Hachiman-cho, Higashikurume, Tokyo 203, Japan, under Part Number JCM 6130 /CM 15521. In principle such tapes will be available until the year 2007. However, by agreement, this period may be shortened or extended to take into account the demand for such Secondary Standard Amplitude Calibration Tapes. It is intended that these be used for calibrating tertiary reference tapes for use in routine calibration.

4.41 Secondary Standard Reference Tape: A tape the performance of which is known and stated in relation to that of the Master Standard Reference Tape.

Note - Secondary Standard Reference Tapes can be ordered from RCJ, 1-1-12 Hachiman-cho, Higashikurume, Tokyo 203, Japan, under Part Number JRM 6130 / RM 15521. In principle such tapes will be available until the year 2007. However, by agreement, this period may be shortened or extended to take into account the demand for such Secondary Standard Reference Tapes. It is intended that these be used for calibrating tertiary reference tapes for use in routine calibration.

4.42 Separator Mark: A record containing no user data, which is used to separate data.

4.43 Standard Reference Amplitude: The Average Signal Amplitude from the tracks of positive azimuth of the Master Standard Amplitude Calibration Tape at a specified physical recording density.

4.44 Tape Reference Edge: The bottom edge of the tape when viewing the recording side of the tape, with the PEOT to the observer's right.

4.45 Test Recording Current: The current that produces the Reference Recording Field.

4.46 track: A diagonally positioned area on the tape along which a series of magnetic signals may be recorded.

4.47 unprocessed data: Data which has not been subjected to processing.

4.48 Unprocessed Record: A record of unprocessed data, comprising an integral number of bytes.

4.49 Virtual End of Tape (VEOT): The point along the length of the magnetic tape within partition 1 which defines the end of the part of partition 1 which is usable for recording data for interchange.

5 Conventions and Notations

A measured value is rounded off to the least significant digit of the corresponding specified value. This implies that, for example, a specified value of 1,26 with a positive tolerance of +0,01 and a negative tolerance of -0,02 allows a range of measured values from 1,235 to 1,275.

The setting of a bit is denoted by ZERO or ONE.

Bit patterns and numbers in binary notation are represented by strings of 0s and 1s. Within such strings, X may be used to indicate that the setting of a bit is not specified within the string.

Bit patterns and numbers in binary notation are shown with the most significant bit to the left and the least significant bit to the right.

The most significant bit of an 8-bit byte is denoted by b8 and the least significant by b1.

The names of basic elements, e.g. specific fields, are given with a capital initial letter.

6 Acronyms

AEWP After Early Warning Point
AFN Absolute Frame Number
BAT Block Access Table
DF-ID Data Format Identifier
ECC Error Correcting Code
EOD End of Data
EWP Early Warning Point
GIT Group Information Table
LBOT Logical Beginning of Tape
LSB Least Significant Byte
LF-ID Logical Frame Identifier

Copyright International Organization for Standardization
Provided by IHS under license with ISO
No reproduction or networking permitted without license from IHS Not for Resale

MRS Media Recognition System
MSB Most Significant Byte
MSRT Master Standard Reference Tape
PBOT Physical Beginning of Tape
PEOT Physical End of Tape
RAW Read-After-Write
SNR Signal-to-Noise Ratio
VEOT Virtual End of Tape

7 Environment and safety

7.1 Testing environment

Tests and measurements made on the tape cartridge to check the requirements of this International Standard shall be carried out in the following ambient conditions of the air immediately surrounding the drive :

temperature : 23 °C ± 2 °C

relative humidity : 40 % to 60 %

conditioning period before testing : 24 h

7.2 Operating environment

Cartridges used for data interchange shall be capable of operating under the following conditions, as measured within 10 mm of the tape exit from the drum of the generating or receiving drive :

temperature : 15 °C to 55 °C

relative humidity : 10 % to 80 %

wet bulb temperature : 26 °C max.

There shall be no deposit of moisture on or in the cartridge.

The above conditions include any temperature rise that may occur while operating the drive.

Conditioning before operating:

If a cartridge has been exposed during storage and/or transportation to a condition outside the above values, before use the cartridge shall be conditioned in the operating environment for a time at least equal to the period during which it has been out of the operating environment, up to a maximum of 24 h.

Note - Rapid variations of temperature should be avoided.

7.3 Storage environment

For long-term or archival storage of cartridges the following conditions shall be observed:

temperature : 5 °C to 32 °C

relative humidity : 20 % to 60 %

wet bulb temperature : 26 °C max.

The stray magnetic field at any point on the tape shall not exceed 4 000 A/m. There shall be no deposit of moisture on or in the cartridge.

7.4 Transportation

Recommended limits for the environment to which a cartridge may be subjected during transportation, and the precautions to be taken to minimize the possibility of damage, are provided in annex K.

7.5 Safety

The cartridge and its components shall satisfy the requirements of IEC 950.

7.6 Flammability

The cartridge and its components shall be made from materials, which if ignited from a match flame, do not continue to burn in a still carbon dioxide atmosphere

Copyright International Organization for Standardization
Provided by IHS under license with ISO
No reproduction or networking permitted without license from IHS Not for Resale

8 Dimensional and mechanical characteristics of the case

8.1 General

The case of the cartridge shall comprise

- an upper half,
- a lower half,
- a slider movably mounted on the lower half,
- a lid pivotally mounted on the upper half.

In the drawings, using third angle projection, an embodiment of the cartridge is shown as an example.

Figure 1	is a perspective view of the cartridge seen from top.
Figure 2	is a perspective view of the cartridge seen from bottom.
Figure 3	is a partial view of the rear side.
Figure 4	is a schematic view showing the Reference Planes X, Y and Z.
Figure 5	shows the front side.
Figure 6	shows the top side with the lid in closed position.
Figure 7	shows the left side.
Figure 8	shows the top side with the lid in open position.
Figure 9	shows the left side with the lid in open position.
Figure 10	shows the bottom side with the lid and the slider in closed position.
Figure 11	shows the bottom side with the lid and the slider in open position.
Figure 12	is a view from the top of the inside of the lower half with the upper half removed.
Figure 13	is a view of the bottom half with the lid and the slider in open position.
Figure 14	is a view of the left side with the lid and the slider in open position.
Figure 15	is a top view of a hub.
Figure 16	is a side view of a hub with partial cross-section.
Figure 17	is a partial cross-section through a hub and both halves of the case showing the interface with the drive spindle.
Figure 18	shows at a larger scale the lid in the open position.
Figures 19, 20	show at a larger scale the functional relationship between the lid and the locking mechanism of the hubs.
Figures 21, 22	show the label areas on the top and the rear side.
Figure 23	shows both corners of the bottom side, for autoloaders
Figure 24	shows the slider bowdown, for autoloaders.

The dimensions are referred to three orthogonal Reference Planes X, Y and Z (figure 4).

Plane X is perpendicular to Plane Z and passes through the centres of both the circular and elongated Datum Holes, revealed when the slider is opened (see 8.8.4 and figure 11).

Plane Y is perpendicular to Plane X and Plane Z and passes through the centre of the circular Datum Hole.

Plane Z is the plane on which the slider moves (see figure 7).

8.2 Overall dimensions (figures 6 and 7)

The overall dimensions of the case with the lid in the closed position shall be

$l_1 = 73{,}0 \text{ mm} \pm 0{,}3 \text{ mm}$

$l_2 = 54{,}0 \text{ mm} \pm 0{,}3 \text{ mm}$

$l_3 = 10{,}5 \text{ mm} \pm 0{,}2 \text{ mm}$

Where the shell meets the lid on the top side of the cartridge, the angle of the chamfer shall be

$\theta = 45° \pm 8°$ (see figure 21)

The edges formed by the rear side and the left and right sides shall be rounded off with a radius

$r_1 = 1{,}0 \text{ mm} \pm 0{,}5 \text{ mm}$

The two edges of the lid shall be rounded off with a radius

$r_2 = 0{,}5 \text{ mm max.}$

Copyright International Organization for Standardization
Provided by IHS under license with ISO
No reproduction or networking permitted without license from IHS Not for Resale

8.3 Loading grip (figure 6)

The top side shall have a loading grip for loading and positioning the cartridge into the drive. The position and dimensions of the loading grip shall be

l_4 = 25,5 mm ± 0,3 mm

l_5 = 11,0 mm ± 1,0 mm

l_6 = 5,0 mm ± 0,2 mm

l_7 = 2,3 mm ± 0,3 mm

The depth of the loading grip below the surface of the top side shall be

$$0{,}5\ \text{mm}\ {}^{+\,0{,}2\ \text{mm}}_{-\,0{,}0\ \text{mm}}$$

8.4 Holding areas (figure 6)

The two areas shown shaded in figure 6 shall be the areas along which the cartridge shall be held down when inserted in the drive. Their positions and dimensions shall be

l_8 = 6,0 mm ± 0,1 mm

l_9 = 5,0 mm ± 0,1 mm

8.5 Notches of the lid (figures 5 and 8)

The lid shall have two pairs of notches.

The first pair of notches, the slider lock release notches, allows elements of the drive to release the locking mechanism of the slider. The positions and dimensions of these notches shall be

l_{10} = 0,4 mm max.

l_{11} = 3,0 mm min.

l_{12} = 1,2 mm ± 0,1 mm

l_{13} = 49,8 mm ± 0,2 mm

The second pair of notches, the slider movement notches, allows elements of the drive to move the slider from the closed to the open position (see also 8.8.1). The positions and dimensions of these notches shall be

l_{11} = 3,0 mm min.

l_{14} = 0,9 mm min.

l_{15} = 7,5 mm ± 0,1 mm

l_{16} = 36,00 mm ± 0,15 mm

8.6 Lid dimensions (figures 6 to 8)

The lid is shown in the closed position in figures 6 and 7. Its dimensions shall be

l_{17} = 1,2 mm ± 0,1 mm

l_{18} = 6,8 mm ± 0,4 mm

l_{19} = 1,1 mm ± 0,1 mm

l_{20} = 2,0 mm ± 0,1 mm

l_{21} = 6,4 mm ± 0,2 mm

l_{22} = 1,5 mm ± 0,1 mm

r_3 = 6,8 mm ± 0,4 mm

Copyright International Organization for Standardization
Provided by IHS under license with ISO
No reproduction or networking permitted without license from IHS Not for Resale

The lid shall have a chamfer of 45° by

l_{23} = 1,5 mm ± 0,1 mm

There shall be a dimensional relationship between the height l_{24} shown in figure 7, which includes the slider and the upper half, and the height l_{25} of the lid. When a vertical force of 1 N is exerted on the upper half the following condition shall be met.

l_{24} = 10,5 mm ± 0,2 mm

$l_{25} \leq l_{24}$

When no force is exerted

l_{24} = 10,9 mm max.

In figure 8 the lid is shown in the open position. The distance from the front edge of the lid to the rear side shall be

l_{26} = 55,5 mm ± 0,3 mm.

8.7 Optical detection of the beginning and end of tape (figures 8, 9 and 12)

Means for the optical detection of the beginning and end of tape shall be provided. These shall consist of a pair of windows on the left and right sides of the case (see also figure 18). The design of these windows allows this detection for two different drive designs:

- either a light source and a detector are provided in the drive on each side of the cartridge, in which case the light enters the case through the upper windows, falls on a prism (see section A-A) mounted inside the case, which reflects this light so that it goes through the tape and falls on the detector through the lower window; the light transmittance of the prism shall be greater than 50% of that of a reference prism when measured as specified in annex A,
- or, the light of a light source within the drive passes through the tape from inside the cartridge and falls through the lower windows onto the detectors placed on each side of the case.

The positions and dimensions of these windows allow the cartridge to be used with drives implementing either system, they shall be

l_{27} = 6,20 mm ± 0,10 mm

l_{28} = 7,65 mm ± 0,10 mm

$l_{29} = 1{,}50\ ^{+\,0{,}20\ \text{mm}}_{-\,0{,}00\ \text{mm}}$

l_{30} = 3,9 mm ± 0,1 mm

l_{31} = 1,8 mm ± 0,1 mm

l_{32} = 7,0 mm ± 0,2 mm

l_{33} = 2,5 mm min.

Dimension l_{32} specifies the position of the rear edge of the windows relative to Reference Plane X. Dimension l_{33} shall be measured relative to this rear edge.

8.8 Bottom side

The bottom side is shown in figure 10 with the lid and the slider in the closed position and in figure 11 with both in the open position.

The dimension l_{34} of the bottom half, l_{35} of the slider and l_{36} of the lid shall satisfy the following conditions

l_{34} = 73,0 mm ± 0,3 mm

$l_{35} \leq l_{34}$

$l_{36} \leq l_{34}$

Copyright International Organization for Standardization
Provided by IHS under license with ISO
No reproduction or networking permitted without license from IHS Not for Resale

8.8.1 Locking mechanism of the slider (figure 10)

The cartridge shall have a locking mechanism for the slider which locks it in the closed and open positions. The design of this mechanism is not specified by this International Standard, except for the different forces acting on the slider, and for its detent.

The slider shall be spring-loaded by a spring holding it in the closed position when it is unlocked. The force required to operate the slider shall not exceed 2 N.

The slider shall have two grooves with an opening at each end. The detent of the locking mechanism shall protrude through these openings so as to hold the slider in both open and closed positions. The detent shown in cross-section C-C is only an example of implementation.

The grooves are parallel to Reference Plane Z and aligned with the slider lock release notches of the lid. The positions and dimensions of the grooves and of the openings for the detent of the locking mechanism when the slider is in the closed position shall be

l_{37} = 1,2 mm ± 0,1 mm

l_{38} = 49,8 mm ± 0,2 mm

l_{39} = 10,0 mm ± 0,1 mm

$l_{40} = 2{,}0\ \text{mm}\ {}^{+0{,}5\ \text{mm}}_{-0{,}0\ \text{mm}}$

l_{41} = 3,0 mm min.

l_{42} = 1,5 mm min.

l_{43} = 0,8 mm ± 0,1 mm

$l_{44} = 0{,}8\ \text{mm}\ {}^{+0{,}5\ \text{mm}}_{-0{,}1\ \text{mm}}$

λ = 45° min.

l_{45} = 0,65 mm ± 0,05 mm

The position and dimensions of the openings for the detent when the slider is held in the open position are determined by l_{39}, l_{40}, l_{43} and l_{44}.

In the closed position of the slider, the maximum force to be exerted on the detent in a direction perpendicular to Reference Plane Z and over a stroke of 0,65 mm shall be 0,5 N max.

In the open position of the slider the holding force shall be 0,3 N min.

8.8.2 Access holes (figure 10)

The slider shall have two circular access holes (see section B-B) which, in the open position of the slider, allow penetration of the drive spindles into the hubs. The diameters of these access holes shall be

d_1 = 10,0 mm ± 0,2 mm

d_2 = 12,0 mm max.

These access holes shall have a chamfer of depth 0,5 mm ± 0,2 mm.

8.8.3 Recognition, sub-datums, and write-inhibit holes (figure 11)

The bottom half shall have a number of holes on an edge at its rear. This edge shall be defined by

l_{46} = 45,2 mm ± 0,2 mm

l_{47} = 49,2 mm ± 0,2 mm

The centres of these holes lie on a line perpendicular to Reference Plane Y at a distance from Reference Plane X of

l_{48} = 47,2 mm ± 0,2 mm

Copyright International Organization for Standardization
Provided by IHS under license with ISO
No reproduction or networking permitted without license from IHS Not for Resale

8.8.3.1 Recognition Holes (figures 10 and 11)

There shall be four Recognition Holes numbered from 1 to 4 as shown in figure 10. Their positions and dimensions shall be

d_3 = 2,5 mm ± 0,1 mm

l_{49} = 1,0 mm ± 0,1 mm

l_{50} = 56,0 mm ± 0,3 mm

l_{51} = 4,0 mm ± 0,1 mm

l_{52} = 1,0 mm ± 0,1 mm

l_{53} = 3,0 mm min.

All Recognition Holes shall have the cross-section shown in cross-section F-F in figure 11 for Recognition Hole No. 1.

One of the two cross-sections F-F shows a Recognition Hole closed by means of a plug, the other shows it with the plug punched out. These plugs shall withstand an applied force of 0,5 N max. without being punched out.

Recognition Holes No. 1 and No. 3 shall be open. Recognition Holes No. 2 and No. 4 shall be closed.

Other combinations of the states of the Recognition Holes No. 1, No. 2, No. 3 and No. 4 are reserved for other applications (see annex H).

8.8.3.2 Write-inhibit Hole (figure 11)

The position and dimensions of the Write-inhibit Hole shall be

d_4 = 2,5 mm ± 0,1 mm

l_{50} = 56,0 mm ± 0,3 mm

When the Write-inhibit Hole is open recording on the tape is inhibited, when it is closed recording is enabled.

The Write-inhibit Hole shall have the cross-section shown in cross-section F-F in figure 11 for Recognition Hole No. 1. One of the two cross-sections F-F shows the hole closed by means of a plug, the other shows it with the hole punched out. These plugs shall withstand an applied force of 0,5 N max without being punched out.

The case may have a movable element allowing the Write-inhibit Hole to be opened and closed. If present, this element shall be such that the state of Write-inhibit Hole is visible (see figure 3 as an example). Such an element shall be neither broken nor moved by a force smaller than 0,5 N.

Regardless of whether a plug or a movable element is used to select the open and closed states of the Write-inhibit Hole, the following dimensions from cross-section F-F shall define the closed and open states, respectively.

l_{52} = 1,0 mm ± 0,1 mm

l_{53} = 3,0 mm min.

8.8.3.3 Sub-datum holes (figure 11)

These holes are used to position the cartridge in the drive. Their position and dimensions shall be as follows.

The hole seen below the Write-inhibit Hole in figure 11 shall have an elongated form and the same cross-section E-E as shown for the other hole.

l_{54} = 45,5 mm ± 0,2 mm

$l_{55} = 3{,}5\ ^{+0,1\ \text{mm}}_{-0,0\ \text{mm}}$

$l_{56} = 2{,}50\ ^{+0,05\ \text{mm}}_{-0,00\ \text{mm}}$

The position and dimensions of the other Sub-datum hole shall be

$d_5 = 2{,}50\ ^{+0,05\ \text{mm}}_{-0,00\ \text{mm}}$

Copyright International Organization for Standardization
Provided by IHS under license with ISO
No reproduction or networking permitted without license from IHS Not for Resale

d_6 = 1,0 mm min.

l_{57} = 5,5 mm ± 0,1 mm

l_{58} = 2,0 mm min.

l_{59} = 1,2 mm min.

The edge of both Sub-datum Holes shall have a chamfer of

0,2 mm ± 0,1 mm.

8.8.4 Datum holes (figure 11)

The lower half has two Datum Holes also used to position the cartridge within the drive. One of them has an elongated form, the other is circular. Cross-section D-D shown for the latter also applies to the former. Their positions and dimensions shall be

l_{60} = 51,0 mm ± 0,1 mm

$l_{61} = 2{,}80\ ^{+0{,}05\ \text{mm}}_{-0{,}00\ \text{mm}}$ mm

$l_{62} = 3{,}5\ ^{+0{,}1\ \text{mm}}_{-0{,}0\ \text{mm}}$ mm

l_{63} = 3,0 mm min.

$d_7 = 2{,}80\ ^{+0{,}05\ \text{mm}}_{-0{,}00\ \text{mm}}$ mm

The upper edge of both Datum Holes shall have a chamfer of 0,2 mm ± 0,1 mm.

8.8.5 Access room for tape guides (figure 11)

When the cartridge is inserted into the drive, tape guides in the drive pull out the tape toward the heads of the drive. The shape and dimensions of the access room provided by the cartridge for these tape guides shall be (see also 8.8.7.5):

l_{64} = 3,1 mm max.

l_{65} = 5,6 mm min.

l_{66} = 11,0 mm max.

$l_{67} = 7{,}0\ ^{+0{,}7\ \text{mm}}_{-0{,}0\ \text{mm}}$ mm

l_{68} = 6,7 mm min.

$\alpha = 45° \pm 1°$

l_{69} = 47,9 mm min.

$l_{70} = 3{,}30\ ^{+0{,}00\ \text{mm}}_{-0{,}15\ \text{mm}}$ mm

8.8.6 Holes for accessing the hubs (figure 11)

The lower half has two holes through which the spindles of the drive can access the hubs when the slider is in the open position. The positions and dimensions of these holes shall be

d_8 = 9,0 mm ± 0,1 mm

l_{71} = 29,00 mm ± 0,15 mm

l_{72} = 10,5 mm ± 0,1 mm

l_{73} = 30,0 mm ± 0,1 mm

Copyright International Organization for Standardization
Provided by IHS under license with ISO
No reproduction or networking permitted without license from IHS Not for Resale

8.8.7 Internal structure of the lower half (figure 12)

In figure 12 the different elements of the inside of the lower half are shown. There shall be a locking mechanism for the hubs to prevent them from rotating when the lid is in the closed position. The design of this locking mechanism is not specified by this International Standard, thus it is not shown in figure 12. Locking and unlocking of the hubs shall depend upon the position of the lid as specified in 8.13.

8.8.7.1 Diameter of the wound tape

The diameter of the tape wound on a hub shall be

d_9 = 36,5 mm max.

8.8.7.2 Tape wind

The magnetic surface of the tape shall face outwards.

8.8.7.3 Tape motion

The forward direction of tape motion is from the left side of the cartridge to its right side (see figures 1 and 2).

8.8.7.4 Guide posts

The tape shall pass around two guide posts in the cartridge, the axes of which are perpendicular to Reference Plane Z and pass through the centres of the Datum Holes. The positions and dimensions of these guide posts shall be

- their positions are determined by those of the centres of the Datum Holes,
- their cross-section shall be circular with a radius

  r_4 = 3,0 mm ± 0,1 mm

  over an angle of 180° in clockwise sense starting at angle

  ρ = 45° ± 1°
- their cross-section over the other half of 180° is not specified by this International Standard.

8.8.7.5 Position of the tape in the case (Figure 12, view A)

When the tape runs from one guide post to the other it shall remain between two planes parallel to Reference Plane Z. The distance of these planes from Reference Plane Z shall be

l_{74} = 1,4 mm min.

l_{75} = 6,4 mm max.

The design centre for the position of the tape centreline is

l_{76} = 3,9 mm

The height of the access room specified in 8.8.5 for the tape guides shall be

l_{77} = 8,0 $^{+0,6\ \text{mm}}_{-0,0\ \text{mm}}$

8.8.7.6 Tape path zone

When the cartridge is inserted into the drive, the tape is pulled outside the case by tape guides as mentioned above. It is then no longer in contact with the guide posts. The tape path zone of the case is the zone in which the tape must be able to move freely. This zone is defined by

l_{78} = 5,5 mm ± 0,1 mm

l_{79} = 56,5 mm ± 0,3 mm

l_{80} = 8,0 mm ± 0,2 mm

Copyright International Organization for Standardization
Provided by IHS under license with ISO
No reproduction or networking permitted without license from IHS Not for Resale

8.8.8 Light path (figure 12)

As specified in 8.7 there is a lower window in the right and left sides of the case through which light having passed through the tape can pass and fall onto a detector of the drive. In order to ensure that the corresponding light path is not obstructed by inner elements of the case, its configuration in this zone shall be as follows.

The position and dimensions of the lower window are specified by l_{30} and l_{31} (see figure 9). The dimensions

l_{81} = 1,5 mm max.

l_{82} = 5,0 mm min.

ensure that no elements of the case obstruct the light path.

8.8.9 Support Areas (figure 13)

When the cartridge is inserted into the drive and held in position by forces perpendicular to Reference Plane Z acting on the Holding Areas (see 8.4), it shall be supported by three Support Areas A', B', C' on its bottom side, shown shaded in figure 13. The position and dimensions of these areas shall be as follows.

- Areas A' and B' are not specified by this International Standard because they depend on parts of the lower half for which this International Standard does not specify requirements.
- Area C' shall be defined by

  l_{83} = 1,0 mm ± 0,1 mm

  l_{84} = 49,0 mm ± 0,3 mm

8.8.10 Datum Areas (figure 13)

There shall be two annular Datum Surfaces A and B and one circular such surface C. All three Datum Areas shall lie in Reference Plane Z. Their position and dimensions shall be

- Datum Area A shall be centred on the intersection of Reference Planes X, Y and Z, its inner diameter shall be d_7 (see 8.8.4 and figure 11), its outer diameter shall be

  d_{10} = 5,0 mm ± 0,1 mm

- Datum Area B shall be centred on the intersection of Reference Planes X and Z at a distance l_{60} (see 8.8.4 and figure 11) from the centre of Datum Area A. Its inner dimensions shall be l_{61} and l_{62}, its outer diameter shall be d_{10}.
- Datum Area C shall be centred on a point defined by

  l_{85} = 42,0 mm ± 0,3 mm

  l_{86} = 25,5 mm ± 0,3 mm

Its diameter shall be d_{10}.

8.8.11 Relationship between Support and Datum Areas and Reference Plane Z (figure 14)

Support Area A' shall be coplanar with Datum Area A within 0,1 mm.

Support Area B' shall be coplanar with Datum Area B within 0,1 mm.

Support Area C' shall be parallel to Reference Plane Z within 0,1 mm. It shall be at a distance

l_{87} = 1,10 mm ± 0,05 mm

from Reference Plane Z.

8.9 Hubs (figures 15 and 16)

The dimensions of the hubs shall be

$$d_{11} = 6{,}60 \text{ mm}^{+0{,}08 \text{ mm}}_{-0{,}00 \text{ mm}}$$

$$d_{12} = 8{,}8 \text{ mm}^{+0{,}0 \text{ mm}}$$

Copyright International Organization for Standardization
Provided by IHS under license with ISO
No reproduction or networking permitted without license from IHS
Not for Resale

$^{-0,1\ mm}$

$d_{13} = 15{,}00\ mm \pm 0{,}05\ mm$

$\beta = 60° \pm 1°$

$\gamma = 45° \pm 1°$

$l_{88} = 2{,}5\ mm\ ^{+0,1\ mm}_{-0,0\ mm}$

$l_{89} = 2{,}60\ mm\ ^{+0,20\ mm}_{-0,00\ mm}$

The two cylindrical surfaces with diameters d_{11} and d_{13} shall be co-axial within 0,05 mm.

The torque necessary to rotate the hub with a partially or fully wound tape shall be 0,000 2 N·m max.

8.10 Attachment of leader and trailer tapes

The method of attachment of the leader and trailer tapes to the hubs shall be such that when subjected to a force of 5 N max. they will not become detached from the hubs.

8.11 Interface between the hubs and the drive spindles (figure 17)

The interface between the hubs and the spindles, shown in figure 17 in cross-section, is specified in terms of the following relationships:

$1{,}0\ mm \leq (d_{15} - d_{14}) \leq 1{,}2\ mm$

$l_{91} - l_{90} = 1{,}3\ mm\ max.$

Note - It is expected that the top of the drive spindle will not penetrate within the hub beyond a distance $l_d = 7{,}65$ mm max. above Reference Plane Z.

8.12 Opening of the lid (figure 18)

When the lid is opened its lower front edge moves along an arc of a circle with radius

$r_5 = 9{,}6\ mm \pm 0{,}2\ mm$

The centre of rotation is defined by l_{17} and l_{21}. The end position of the lid, i.e. when it is fully open, is defined by

$l_{92} = 10{,}9\ mm \pm 0{,}2\ mm$

$l_{93} = 0{,}3\ mm \pm 0{,}1\ mm$

$l_{94} = 6{,}3\ mm \pm 0{,}2\ mm$

The force F required to open the lid shall not exceed 1,2 N. It shall be applied at a distance

$l_{95} = 5{,}0\ mm \pm 0{,}1\ mm$

measured parallel to Reference Plane Z from the centre of rotation of radius r_5 (see also annex J).

8.13 Release of the hub locking mechanism (figures 19 and 20)

As mentioned in 8.8.7 the design of the locking mechanism for the hubs is not specified by this International Standard, except that it shall be connected to the lid so that the hubs are locked or unlocked as a function of the angular position of the lid.

When the lid rotates from the closed to the open position (clockwise as seen in figures 19 and 20) the hubs shall remain locked as long as the lid has not reached the position defined by:

$l_{96} = 7{,}0\ mm$

$l_{97} = 7{,}5\ mm \pm 0{,}2\ mm$

as shown in figure 19.

The hubs shall be completely released as soon as the lid has reached the position defined by:

$l_{98} = 10{,}3\ mm$

Copyright International Organization for Standardization
Provided by IHS under license with ISO
No reproduction or networking permitted without license from IHS
Not for Resale

l_{99} = 6,6 mm ± 0,2 mm

as shown in figure 20.

8.14 Label areas (figures 21 and 22)

On the top and rear sides of the case there shall be an area on which adhesive labels can be placed. Separate labels shall be used on the top and rear sides of the case. The dimensions of these areas shall be

l_{100} = 5,2 mm min.

l_{101} = 39,4 mm max.

l_{102} = 8,8 mm max.

r_6 = 0,5 mm min.

8.15 Requirement for autoloaders (figures 23 and 24)

To allow use with autoloaders, the channel from the Z Datum to the l_{87} dimension shall be clear. Within this channel, the dimensions of the corners and edges shown in figure 23 shall be

l_{87} = 1,10 mm ± 0,05 mm

r_7 = 0,3 mm max. or 0,3 mm max. chamfer

δ = 6° max.

On the sides of the cartridge, the height of the handling area above the slider recess as shown in figure 23 shall be

l_{103} = 5,4 mm ± 0,5 mm

On the bottom of the cartridge, the slider bowdown as shown in figure 24 shall be

l_{104} = 0,6 mm max.

Copyright International Organization for Standardization
Provided by IHS under license with ISO
No reproduction or networking permitted without license from IHS Not for Resale

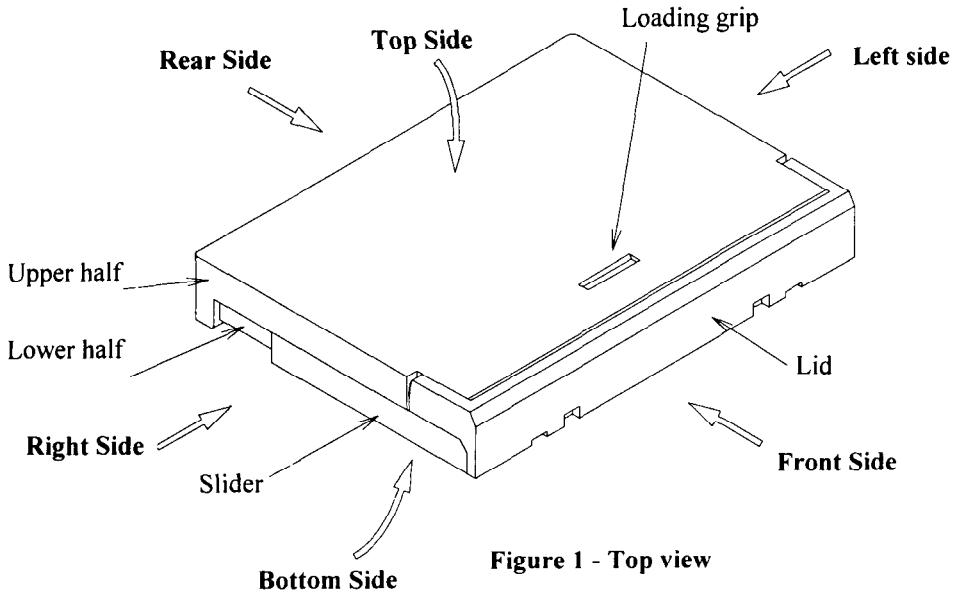

Figure 1 - Top view

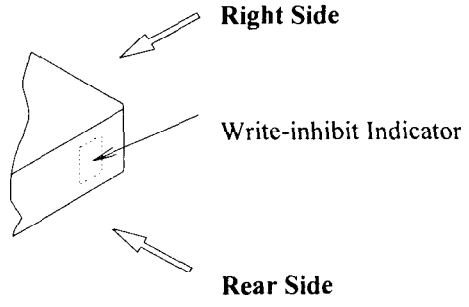

Figure 3 - Partial view of the rear side

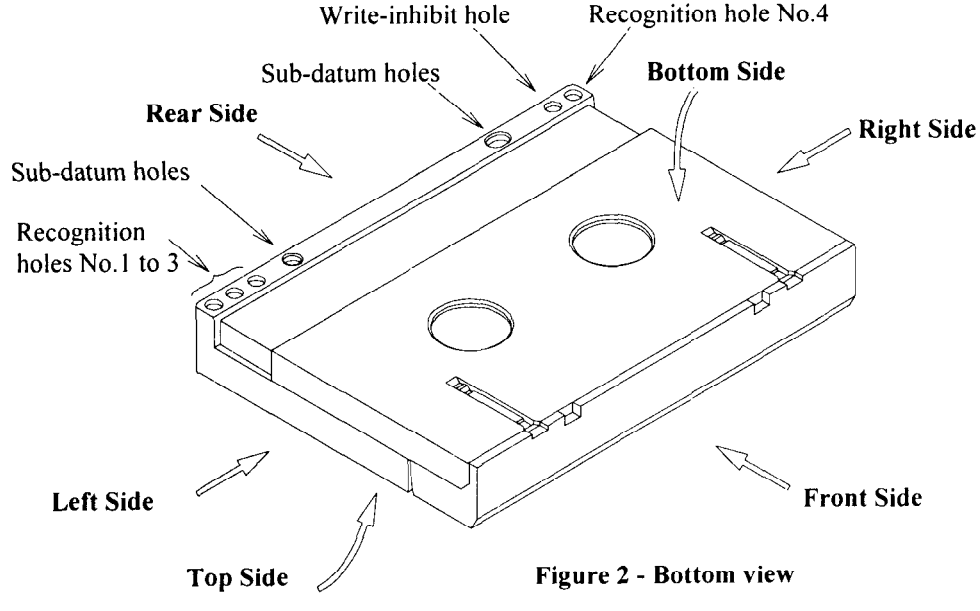

Figure 2 - Bottom view

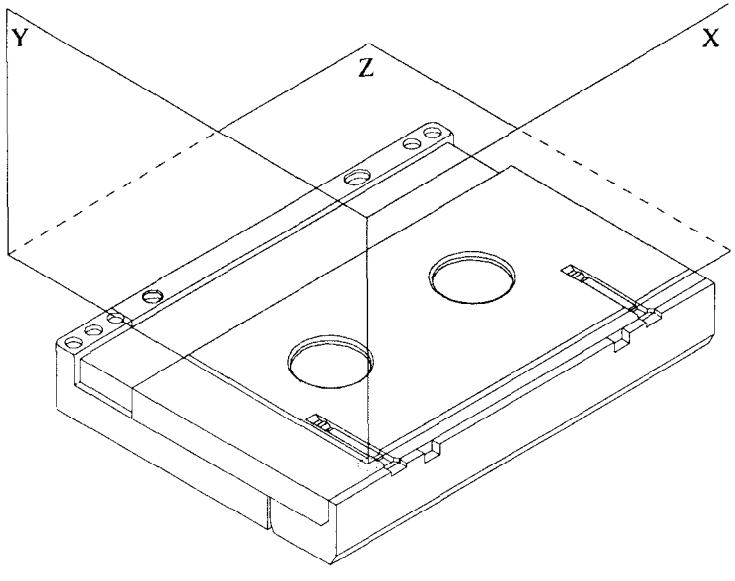

Figure 4 - Reference planes X, Y, Z

©ISO/IEC

Copyright International Organization for Standardization
Provided by IHS under license with ISO
No reproduction or networking permitted without license from IHS

Not for Resale

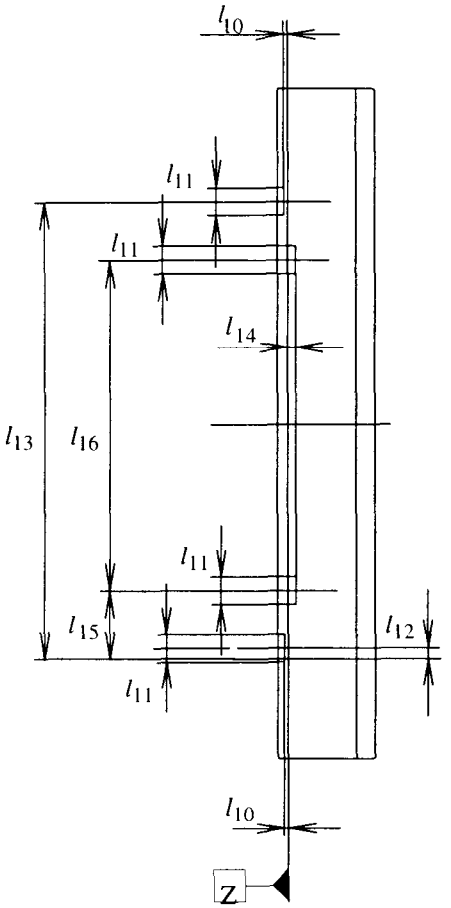

Figure 5 - Front side, lid closed

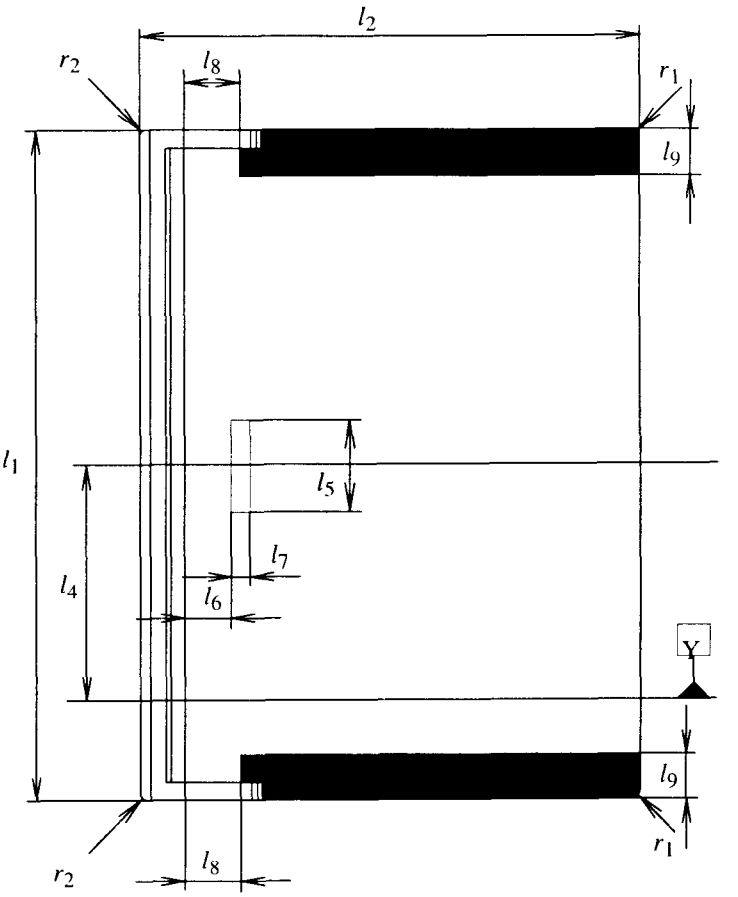

Figure 6 - Top side, lid closed

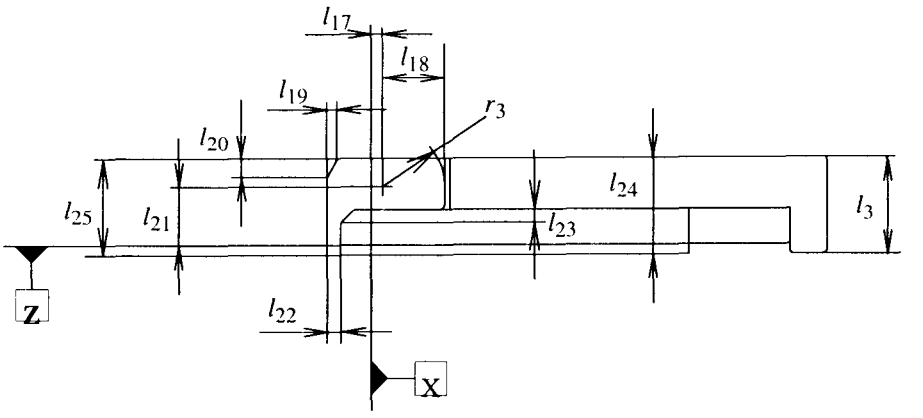

Figure 7 - Left side, lid closed

Copyright International Organization for Standardization
Provided by IHS under license with ISO
No reproduction or networking permitted without license from IHS
Not for Resale

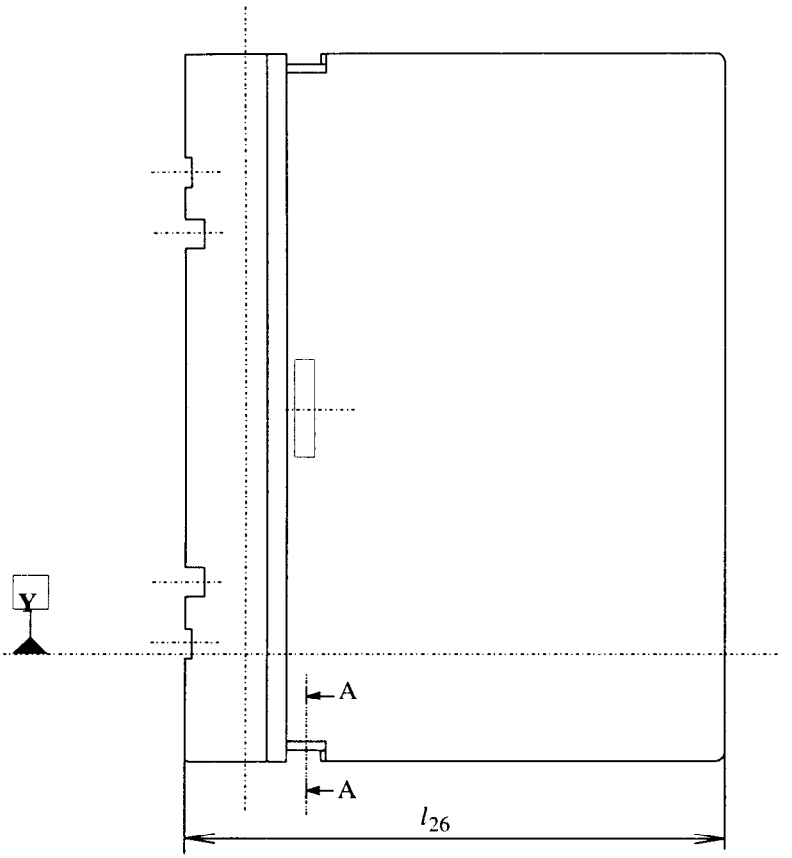

Figure 8 - Top side, Lid

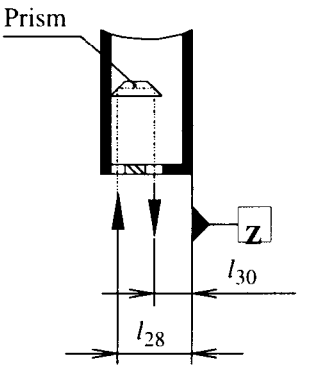

Section A-A

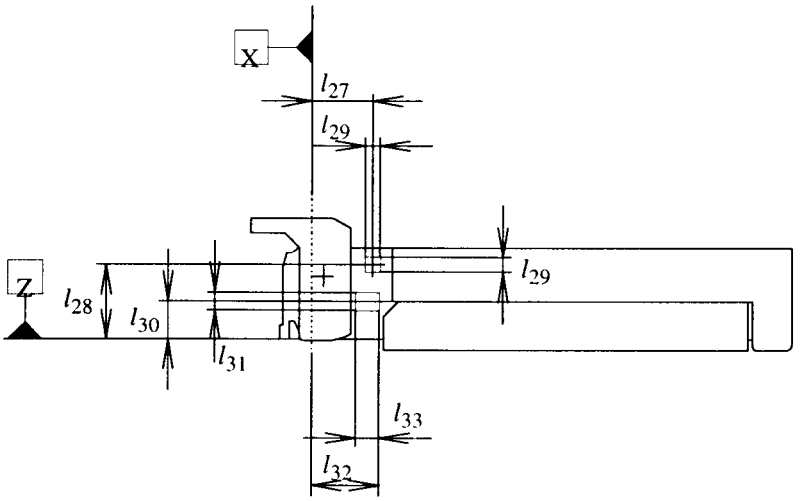

Figure 9 - Left side, Lid open

Copyright International Organization for Standardization
Provided by IHS under license with ISO
No reproduction or networking permitted without license from IHS
Not for Resale

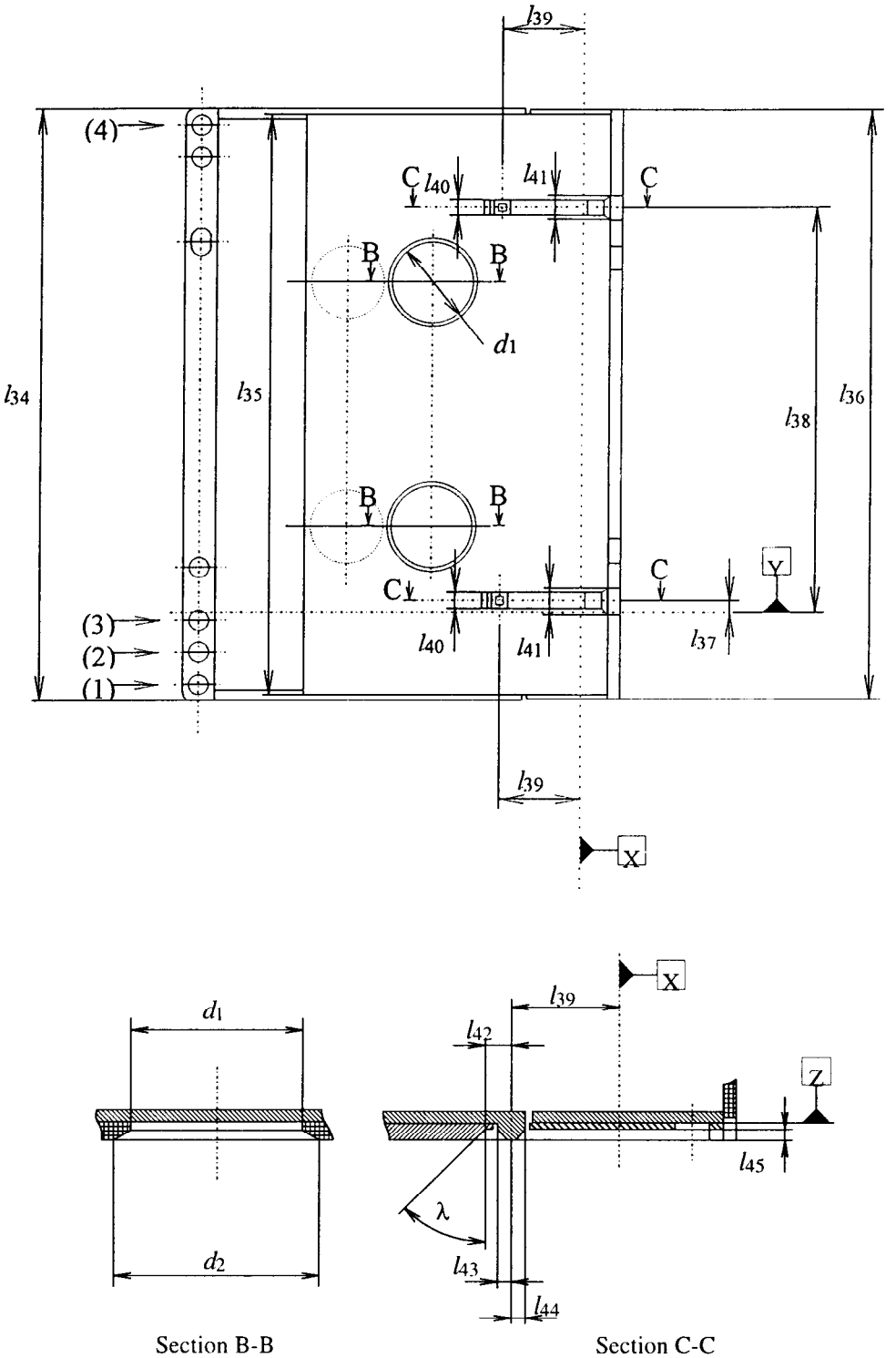

Figure 10 - Bottom side, lid closed

Copyright International Organization for Standardization
Provided by IHS under license with ISO
No reproduction or networking permitted without license from IHS
Not for Resale

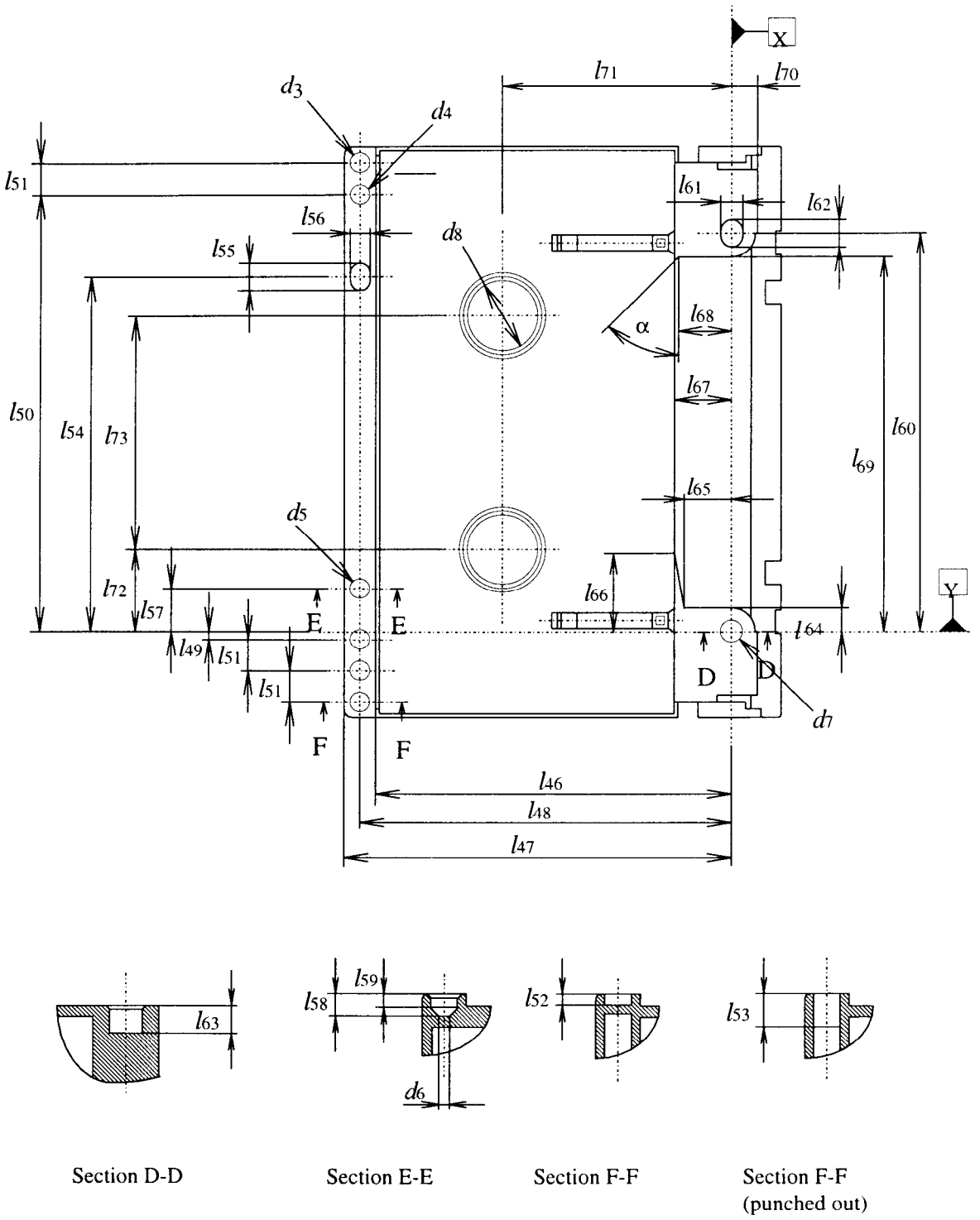

Section D-D Section E-E Section F-F Section F-F (punched out)

Figure 11 - Bottom side, lid open

Copyright International Organization for Standardization
Provided by IHS under license with ISO
No reproduction or networking permitted without license from IHS
Not for Resale

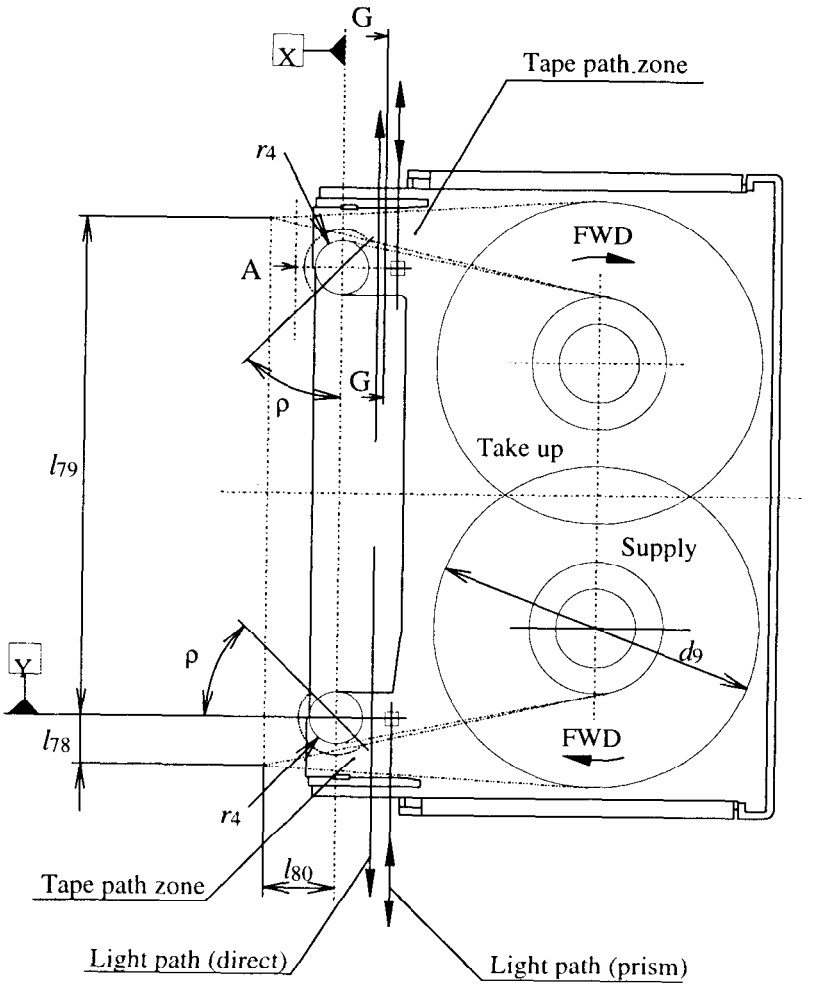

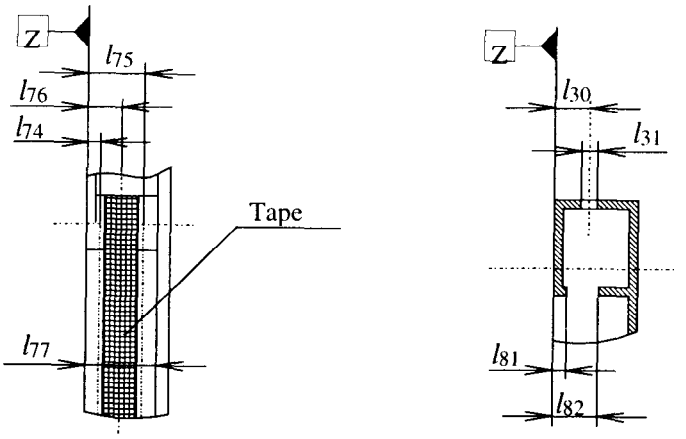

View A Section G-G

Figure 12 - Inside view of the lower half

Copyright International Organization for Standardization
Provided by IHS under license with ISO
No reproduction or networking permitted without license from IHS
Not for Resale

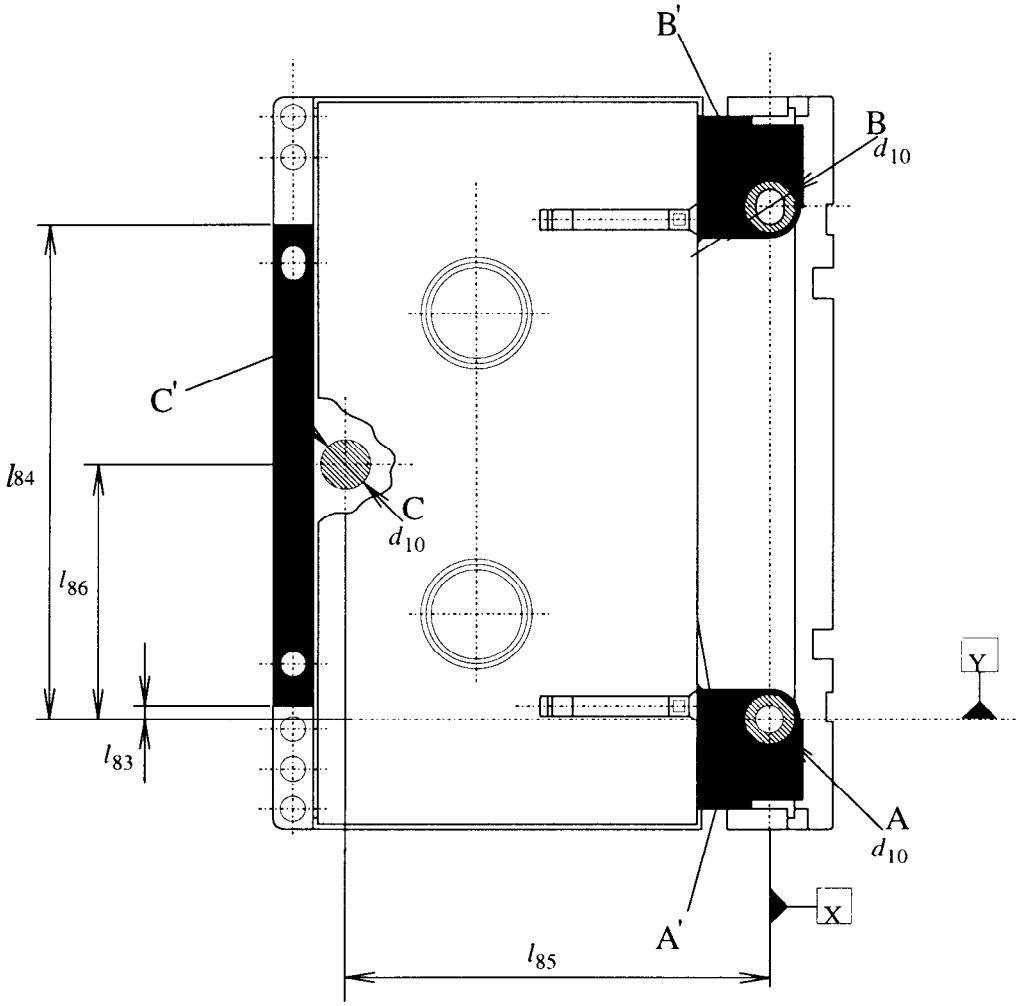

Figure 13 - Bottom side, lid and slider in open position

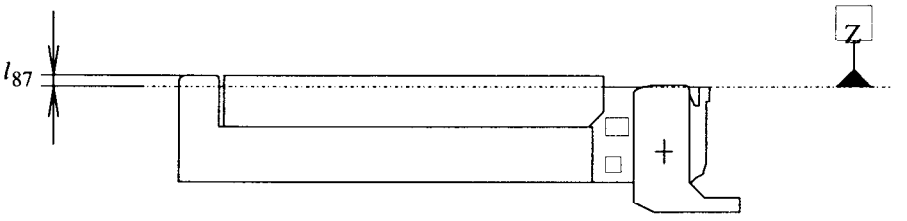

Figure 14 - Left side, lid open

Copyright International Organization for Standardization
Provided by IHS under license with ISO
No reproduction or networking permitted without license from IHS
Not for Resale

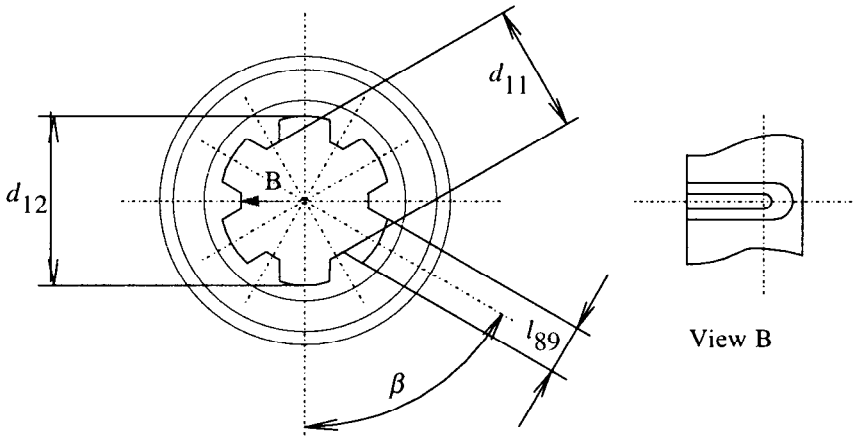

Figure 15 - Top view of a hub

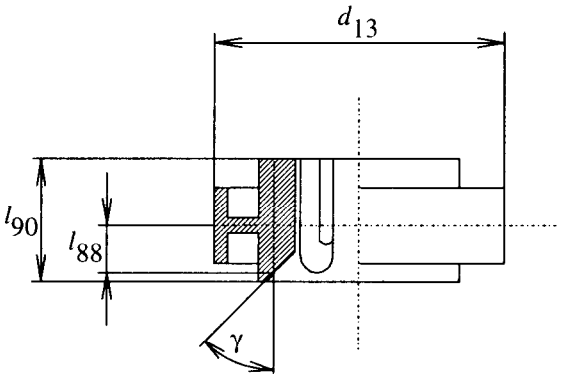

Figure 16 - Side view of a hub

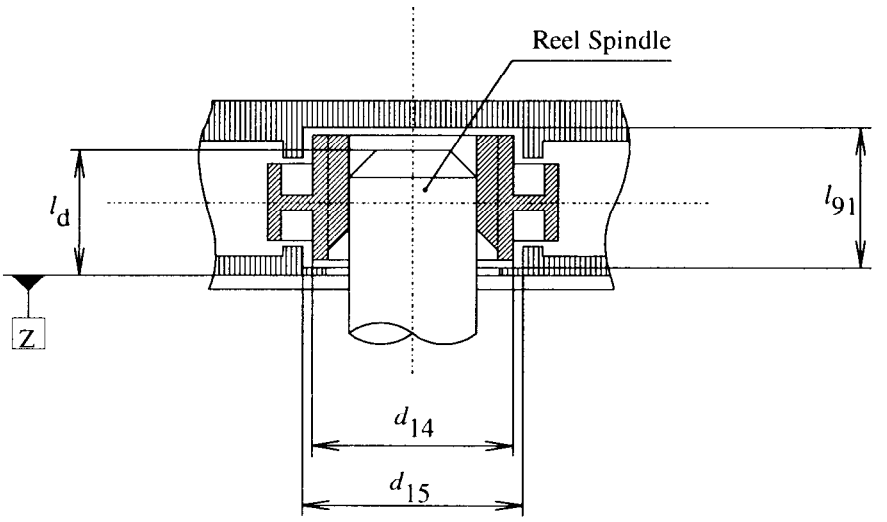

Figure 17 - Interface with the drive spindle

Copyright International Organization for Standardization
Provided by IHS under license with ISO
No reproduction or networking permitted without license from IHS
Not for Resale

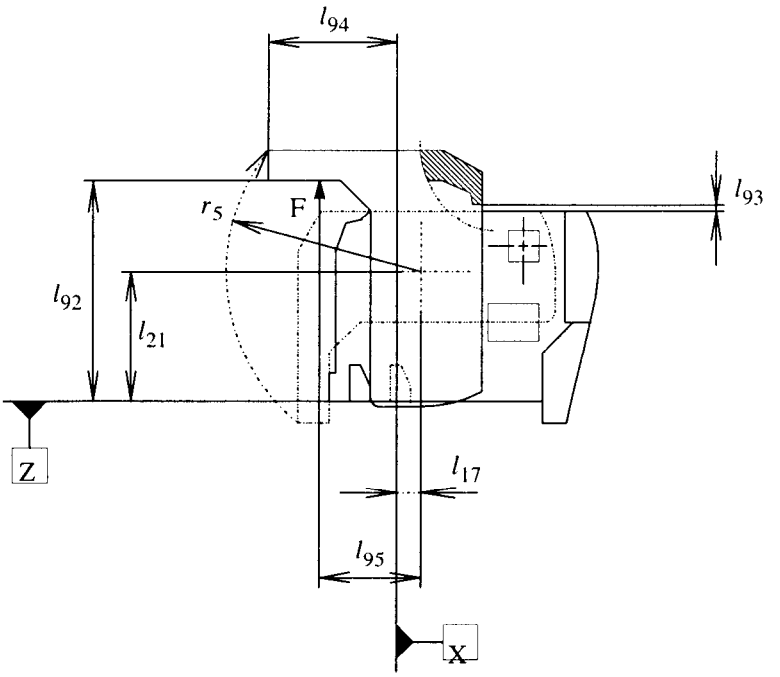

Figure 18 - Lid in completely open position

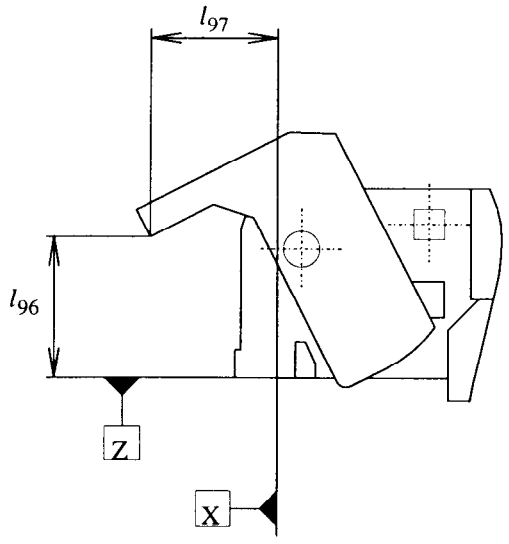

Figure 19 - Extreme position of the lid for which the hubs are still locked

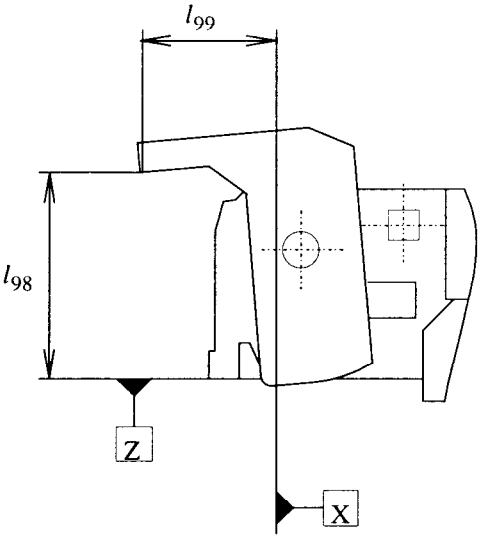

Figure 20 - Minimum position of the lid for which the hubs are completely

Copyright International Organization for Standardization
Provided by IHS under license with ISO
No reproduction or networking permitted without license from IHS
Not for Resale

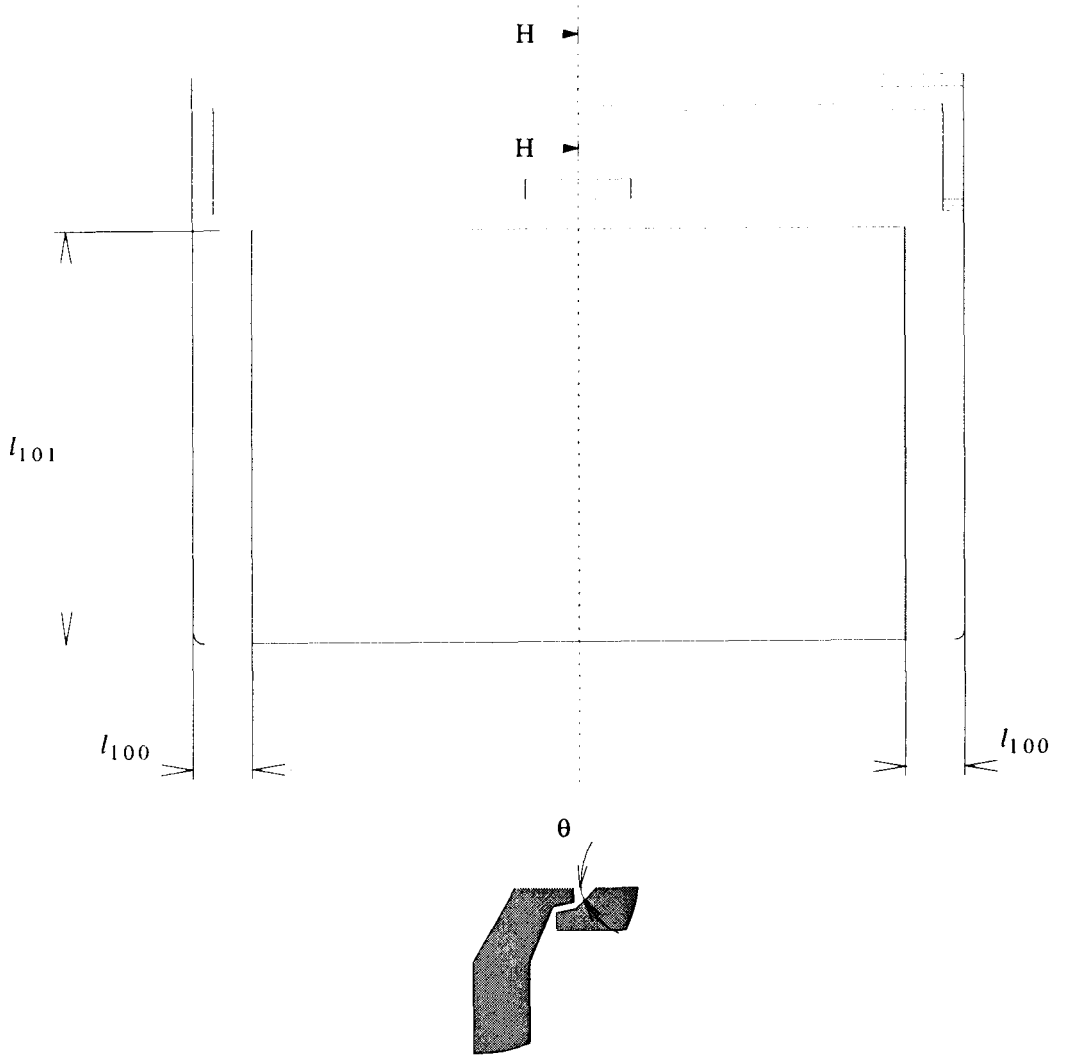

Section H-H

Figure 21 - Top side, label area

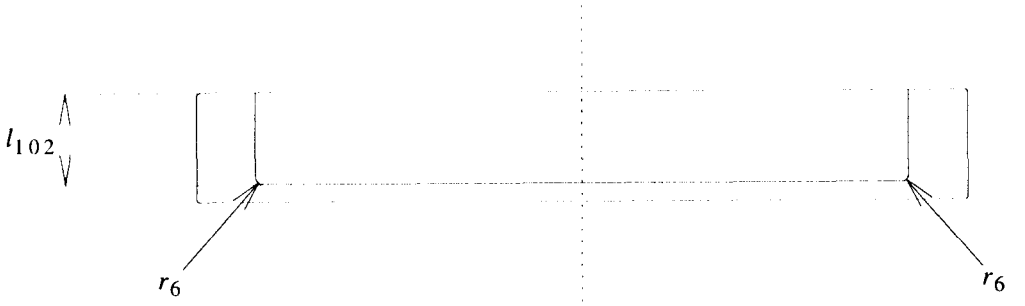

Figure 22 - Rear side, label area

Copyright International Organization for Standardization
Provided by IHS under license with ISO
No reproduction or networking permitted without license from IHS
Not for Resale

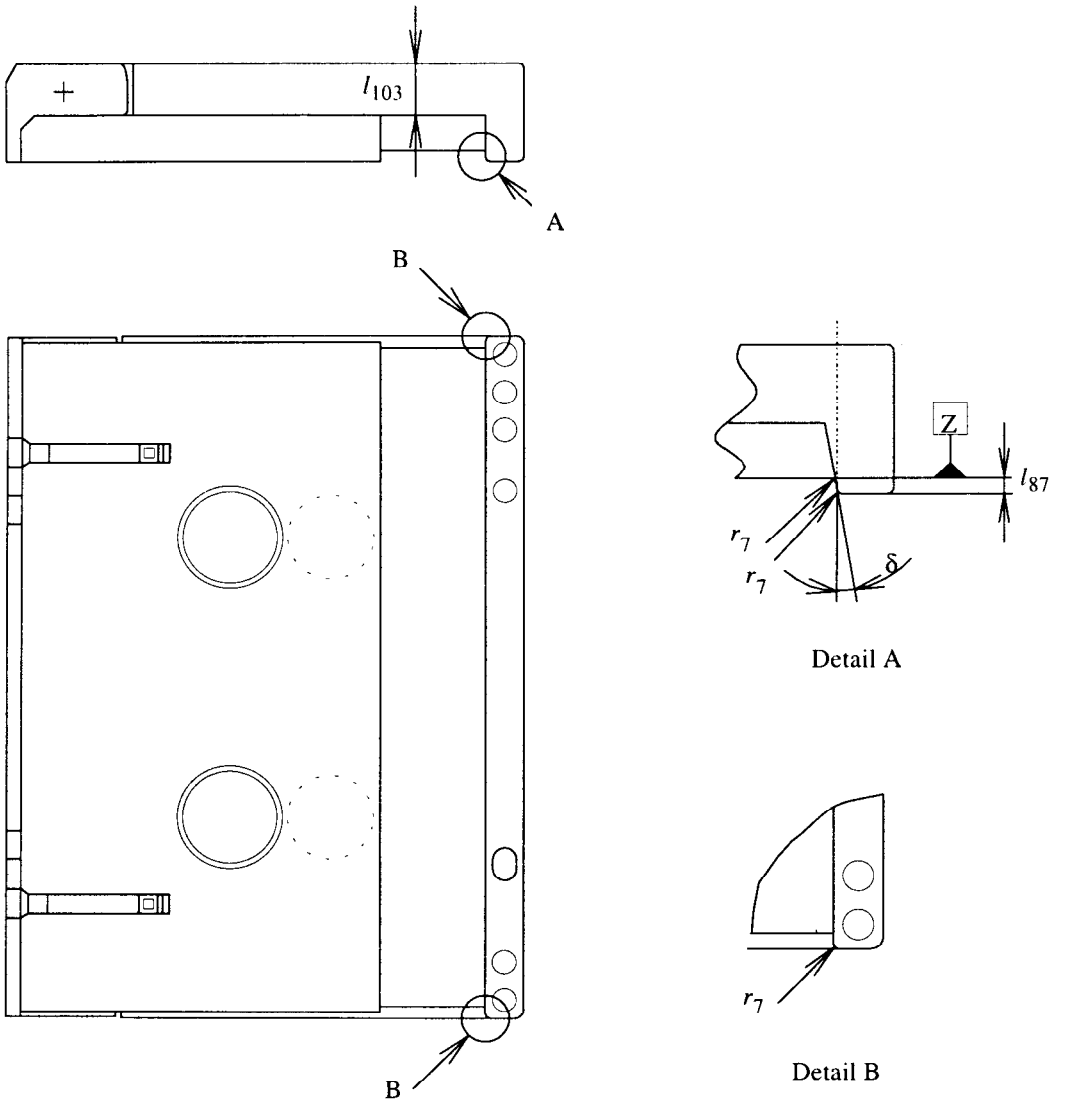

Figure 23 - Bottom side, both corners

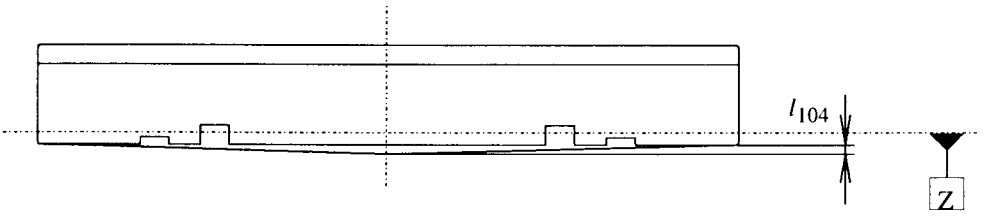

Figure 24 - Front side, slider bowdown

Copyright International Organization for Standardization
Provided by IHS under license with ISO
No reproduction or networking permitted without license from IHS
Not for Resale

9 Mechanical, physical and dimensional characteristics of the tape

9.1 Materials

The recordable area of the tape shall consist of an aromatic polyamide base material (or equivalent) coated on one side with a strong yet flexible layer of ferromagnetic material. The back surface may be coated.

There shall be a leader tape between the take-up hub and PBOT. There shall be a trailer tape between PEOT and the supply hub. The leader and trailer tapes shall consist of a translucent length of the same or equivalent base material without the ferromagnetic coating and the back coating.

The leader and trailer tapes shall each be attached to the magnetic tape by means of a length of splicing tape which extends over each such joint. The splicing tape shall consist of polyethylene terephthalate (or equivalent), coated on one side with an acrylic (or equivalent) adhesive material.

9.2 Tape length

9.2.1 Length of magnetic tape

The length of tape between PBOT and PEOT shall be in the range 10 m to 125 m.

9.2.2 Length of leader and trailer tapes

The length of the leader and trailer tapes shall be 60 mm ± 5 mm. The joints between the leader and trailer tapes and the magnetic tape shall be perpendicular to the Tape Reference Edge within 10°.

9.2.3 Length of splicing tapes

The splicing tapes shall extend for a distance of not less than 6,0 mm and not more than 7,0 mm over the leader and trailer tapes. Their extents over the magnetic tape shall be not less than 4,0 mm and not more than 10,0 mm.

9.3 Tape width

9.3.1 Width of magnetic tape

The width of the magnetic tape shall be

3,800 mm ± 0,005 mm

The width shall be measured across the tape from edge to edge when the tape is under a tension of 0,10 N ± 0,01 N and is lying flat between glass slides.

9.3.2 Width of leader and trailer tapes

The width of the leader and trailer tapes shall be

$$3{,}81 \text{ mm} \begin{matrix} +\,0{,}00 \text{ mm} \\ -\,0{,}02 \text{ mm} \end{matrix}$$

The width shall be measured across the tape from edge to edge when the tape is under a tension of 0,10 N ± 0,01 N and is lying flat between glass slides.

9.3.3 Width and position of splicing tape

The width of the splicing tape and its position across the width of the leader, trailer and magnetic tapes shall be such that the bottom edge of the splicing tape shall be no more than 0,60 mm from the bottom edges of the other tapes and the top edge of the splicing tape shall be no more than 0,60 mm from their top edges. Neither edge of the splicing tape shall extend beyond the edges of the leader, trailer and magnetic tapes.

9.3.4 Edge weave

The deviation of the Tape Reference Edge from the calculated edge position over a sample length of 50 mm shall be not more than 3,5 µm.

Procedure

1) Place a 450 mm sample under a tension of 0,050 N ± 0,005 N.

2) Using a calibrated edge position sensor (see figure 25), with an accuracy of ± 0,5 µm or better, take measurements at 0,25 mm intervals along 250 mm of the Tape Reference Edge of the sample.

3) Using the edge position data for the first length of 50 mm, calculate the length's edge position using linear regression analysis (see figure 26)

Copyright International Organization for Standardization
Provided by IHS under license with ISO
No reproduction or networking permitted without license from IHS Not for Resale

4) Determine the maximum deviation of the edge measurements within that length from the calculated edge position (see figure 26).

5) Move the start position for the calculation of the next 50 mm length by an interval of 0,25 mm.

6) Repeat steps 3), 4) and 5) for successive 50 mm lengths along 250 mm of the Tape Reference Edge.

7) The edge weave is the average of the 801 values from step 4).

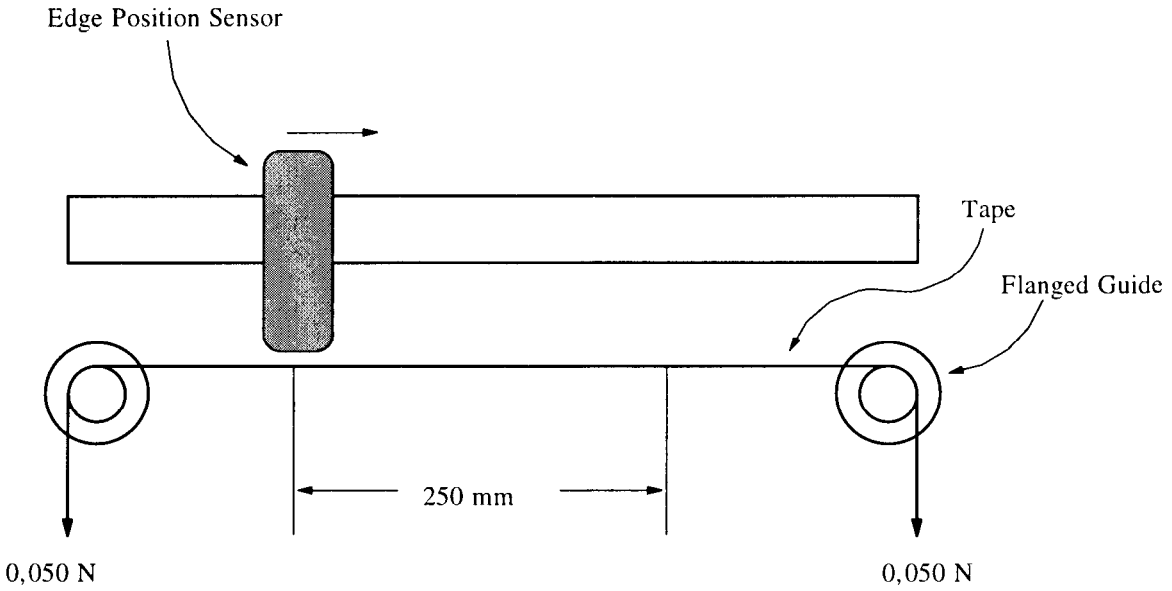

Figure 25 - Measurement of edge weave

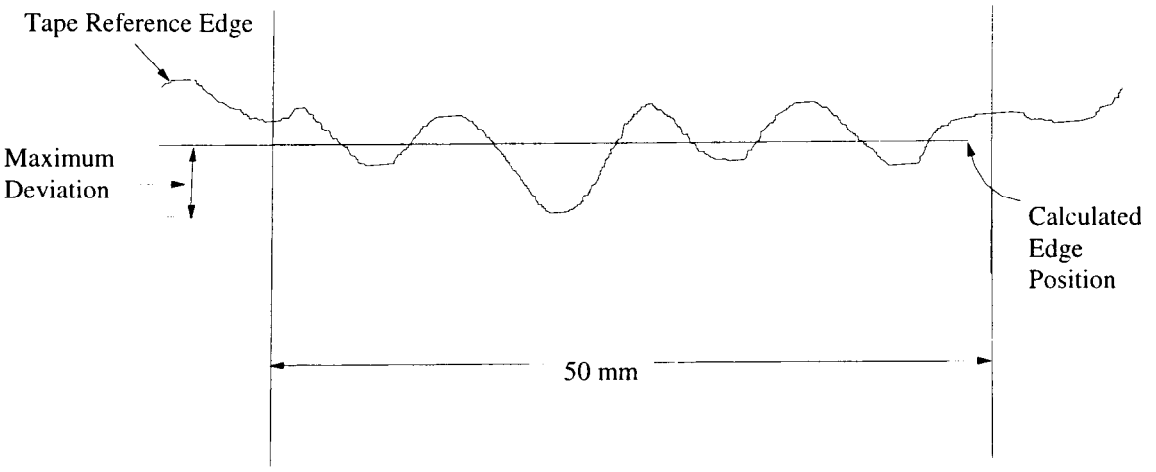

Figure 26 - Edge weave

Copyright International Organization for Standardization
Provided by IHS under license with ISO
No reproduction or networking permitted without license from IHS
Not for Resale

9.4 Discontinuities

Between PBOT and PEOT there shall be no discontinuities in the magnetic tape such as those produced by tape splicing or perforations.

9.5 Tape thickness

9.5.1 Thickness of magnetic tape

The thickness of the magnetic tape at any point shall be

$$6{,}9\ \mu m\ ^{+\,0{,}0\ \mu m}_{-\,0{,}8\ \mu m}$$

9.5.2 Thickness of leader and trailer tape

The thickness of the leader and trailer tapes at any point shall be between 11 µm and 17 µm.

9.5.3 Thickness of splicing tape

The thickness of the splicing tape at any point shall be 27 µm max.

9.6 Longitudinal curvature

The radius of curvature of the edge of the tape shall not be less than 33 m.

Procedure:

Allow a 1 m length of tape to unroll and assume its natural curvature on a flat smooth surface. Measure the deviation from a 1 m chord. The deviation shall not be greater than 3,8 mm. This deviation corresponds to the minimum radius of curvature of 33 m if measured over an arc of a circle.

9.7 Cupping

The departure across the width of tape from a flat surface shall not exceed 0,5 mm.

Procedure:

Cut a 1,0 m ± 0,1 m length of tape. Condition it for a minimum of 3 h in the test environment by hanging it so that both surfaces are freely exposed to the test environment. From the centre portion of the conditioned tape cut a test piece of 25 mm length. Stand the test piece on its end in a cylinder which is at least 25 mm high with an inside diameter of 4,1 mm ± 0,2 mm. With the cylinder standing on an optical comparator measure the cupping by aligning the edges of the test piece to the reticle and determining the distance from the aligned edges to the corresponding surface of the test piece at its centre.

9.8 Coating adhesion

The force required to peel any part of the coating from the tape base material shall not be less than 0,05 N.

Procedure (see figure 27):

Take a test piece of the tape approximately 380 mm long and scribe a line through the recording coating across the width of the tape 125 mm from one end. Using a double-sided pressure sensitive tape, attach the full width of the test piece to a smooth metal plate, with the recording surface facing the plate, as shown in the figure below. Fold the test piece over 180°, attach the metal plate and the free end of the test piece to the jaws of a universal testing machine and set the speed of the jaw separation to 254 mm per min. Note the force at which any part of the coating first separates from the base material. If this is less than 0,05 N, the tape has failed the test. If the test piece peels away from the double-sided pressure sensitive tape before the force exceeds 0,05 N, an alternative type of double-sided pressure sensitive tape shall be used. If the back surface of the tape is coated, repeat the procedure for the back coating

Copyright International Organization for Standardization
Provided by IHS under license with ISO
No reproduction or networking permitted without license from IHS Not for Resale

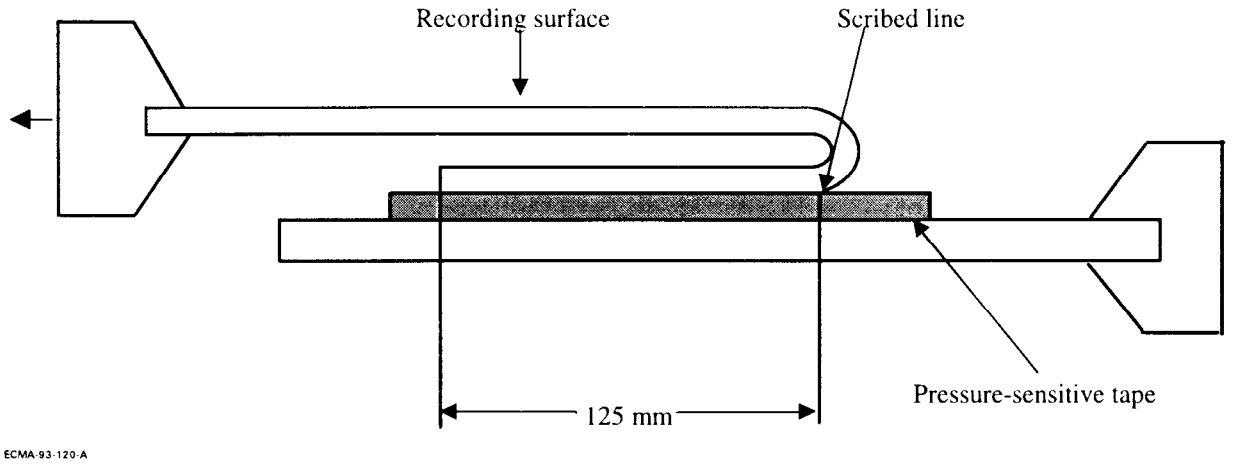

Figure 27 - Measurement of coating adhesion

9.9 Layer-to-layer adhesion

There shall be no tendency for the test piece to stick or for the coating to peel.

Procedure:

Attach one end of a test piece of magnetic tape of length 1 m to the surface of a glass tube of diameter 36 mm.

Wind the tape on to the tube at a tension of 1,1 N.

Store the wound test piece in a temperature of 45 °C ± 3 °C and a relative humidity of 80 % for 4 h.

Store for a further 24 h in the Testing Environment.

Apply a force of 0,1 N to the free end of the test piece and allow it to unwind slowly.

9.10 Tensile strength

Measurements shall be made in accordance with ISO 527 The length of the magnetic tape test piece shall be 200 mm. The length of the leader tape test piece shall be 50 mm. The length of the trailer tape test piece shall be 50 mm. The rate of elongation for all tensile tests shall be 100 mm/min - ISO 527, Rate D.

9.10.1 Breaking strength

The breaking strength of the magnetic tape shall be 6,0 N min.

The breaking strengths of the leader and trailer tapes shall each be 5,0 N min.

The breaking strength of the splice shall be 5,0 N min.

Procedure:

Load the test piece until the breaking point is reached. The force required to reach that point is the breaking strength.

9.10.2 Yield strength

The yield strength is the force required to produce a 3 % elongation of the tape.

The yield strength shall be 4,5 N min.

9.11 Residual elongation

The residual elongation, expressed as a percentage of the original length, shall be less than 0,03 %.

Procedure:

Measure the original length of a test piece of approximately 1 m with an applied tensile force of less than 0,05 N.

For 3 minutes, apply an additional force of 0,8 N.

Remove the additional force and measure the length of the test piece after a further 3 min.

Copyright International Organization for Standardization
Provided by IHS under license with ISO
No reproduction or networking permitted without license from IHS Not for Resale

9.12 Flexural rigidity

The flexural rigidity of the tape in the longitudinal direction shall be between 0,000 7 N·mm^2 and 0,001 4 N·mm^2.

For the base material, the Young's modulus in the transverse direction shall be greater than or equal to the value in the longitudinal direction.

Procedure:

Clamp a 180 mm test piece in a universal testing machine, allowing a 100 mm separation between the machine jaws. Set the jaw separation speed at 5 mm per minute. Plot force against distance. Calculate the flexural rigidity using the slope of the curve between 0,5 N and 1,5 N. The calculation is:

$$E = \frac{\delta F / WT}{\delta L / L} \qquad I = \frac{WT^3}{12}$$

Flexural Rigidity = EI

where:

δF change in force in newtons
T measured thickness in millimetres
W measured width in millimetres
$\delta L/L$ change in sample length between the jaws divided by the original length between the jaws
E Young's modulus in newtons per square millimetre

9.13 Electrical resistance of coated surfaces

The electrical resistance of the recording surface of the magnetic tape, measured on any square area of tape, shall be within the ranges

10^5 Ω to 5 x 10^8 Ω for non-back coated tape

10^5 Ω to 5 x 10^{12} Ω for back-coated tape

The electrical resistance of the back-coating, if present, measured on any square area of tape, shall be less than

9 x 10^8 Ω.

Procedure (see figure 28):

Condition a test piece of tape in the Test Environment for 24 h. Position the test piece over two 24-carat gold-plated semicircular electrodes having a radius r = 10 mm and a finish of at least N4 (see ISO 1302), so that the recording surface is in contact with each electrode. The electrodes shall be placed parallel to the ground and parallel to each other and at a distance d = 3,81 mm between their centres. Apply a force F of 0,25 N to each end of the test piece. Apply a d.c. voltage of 100 V ± 10 V across the electrodes and measure the resulting current flow. From this value determine the electrical resistance.

Repeat for a total of five positions along the test piece and average the five resistance readings.

For back-coated tape repeat the procedure with the back-coating in contact with the electrodes.

Copyright International Organization for Standardization
Provided by IHS under license with ISO
No reproduction or networking permitted without license from IHS Not for Resale

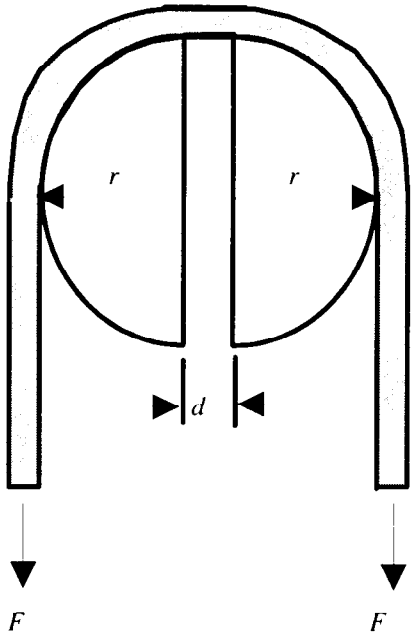

ECMA-93-0122-A

Figure 28 - Measurement of electrical resistance

When mounting the test piece ensure that no conducting paths exist between the electrodes except that through the coating under test.

Note - Particular attention should be given to keeping surfaces clean.

9.14 Light transmittance of the tape

The light transmittance of the magnetic tape shall be less than, or equal to, 5 %.

The light transmittance of the leader and trailer tapes shall be greater than, or equal to, 60 %.

The method for measuring light transmittance is given in annex B.

9.15 Media Recognition System (MRS)

A pattern of alternating clear and opaque stripes shall exist along the entire length of the splicing tape at PBOT. Each stripe shall extend across the entire width of the splicing tape (see figure 29). The splicing tape at PEOT may be clear or consist of the pattern of alternating stripes.

The boundaries between adjacent stripes shall be perpendicular to the Tape Reference Edge to within 10°. The length of each opaque stripe and of each clear stripe, measured parallel to the Tape Reference Edge, shall be 1,50 mm ± 0,20 mm, including the effects of any deviation from parallelism between such boundaries.

It is not required that either end of the splicing tape coincide with any particular point along the length of either an opaque stripe or a clear stripe. It is not required that the joint between leader and magnetic tape coincide with any particular point along the length of either an opaque stripe or a clear stripe.

The light transmittance through the combination of the opaque stripes and the leader tape shall be less than, or equal to, 5 %. The light transmittance through the combination of the clear stripes and the leader tape shall not be less than 60 %.

The method for measuring light transmittance is given in annex B.

Copyright International Organization for Standardization
Provided by IHS under license with ISO
No reproduction or networking permitted without license from IHS
Not for Resale

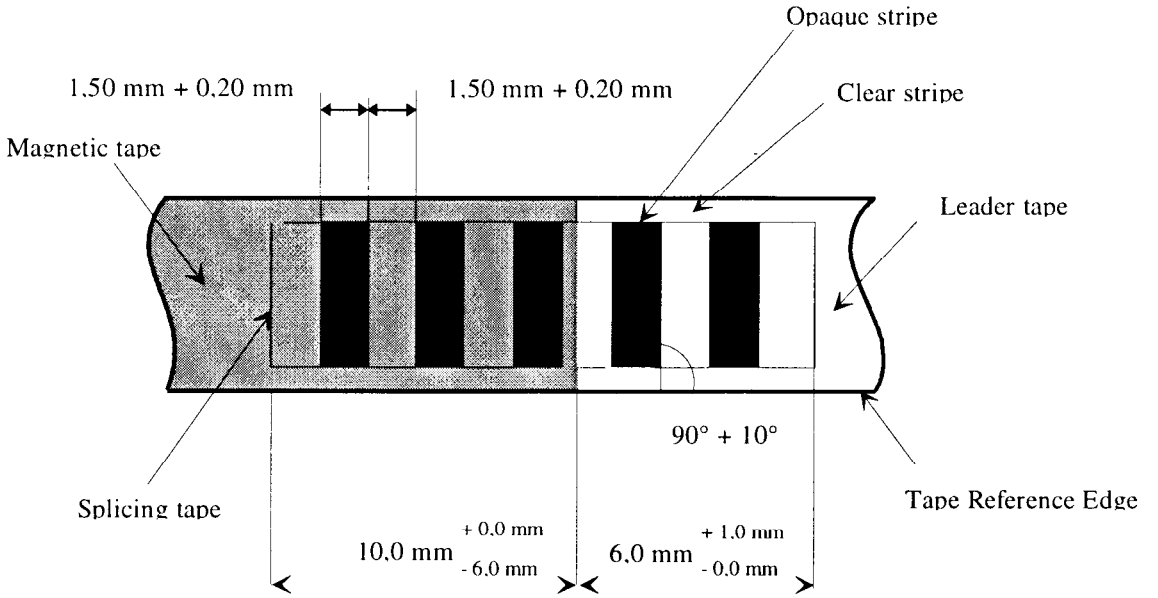

Figure 29 - Splicing tape at PBOT

10 Magnetic recording characteristics

The magnetic recording characteristics shall be defined by the testing requirements given below.

When performing these tests, the output or resultant signal shall be measured on a read-while-write pass for both a tape calibrated to the Master Standard Reference Tape and the tape under test, on the same equipment.

The following conditions shall apply to the testing of all magnetic recording characteristics, unless otherwise stated.

tape condition	: A.C. erased to a level of less than 0,1 % of the Average Signal Amplitude at 2 999,9 ftpmm
head/tape interface	: set up and conditioned to nullify the effects of differences in thickness and flexural rigidity between tapes which meet the requirements of this International Standard and those of other International Standard(s), e.g. ISO/IEC 12247 for DDS and ISO/IEC 13923 for DDS-2. This may be achieved, for example, by running for a sufficient time with media that meets the requirements of clause 9 of this International Standard.
diameter of scanner	: 30,00 mm $^{+\,0,01\ \text{mm}}_{-\,0,00\ \text{mm}}$
rotational speed of scanner	: 2000,0 rpm ± 0,2 rpm
tape speed	: 8,15 mm/s ± 0,03 mm/s
tape tension	: 0,07 N ± 0,02 N, measured at the input to the scanner
test tracks	: positive azimuth; the gaps in the heads shall make an angle of 20° 00' ± 12' with the axis of the scanner
write gap length	: 0,25 µm ± 0,03 µm
read gap length	: 0,20 µm ± 0,05 µm
recording current	: Test Recording Current
recording waveform	: square wave
read track width	: in the range of 5 µm to 15 µm

Copyright International Organization for Standardization
Provided by IHS under license with ISO
No reproduction or networking permitted without license from IHS
Not for Resale

write track width	: equal to, or greater than, the read track width but 24 µm max.
read head height setting	: during a read-while-write pass, all of the read head track shall be within the boundaries of the written track
read output level	: taken at the appropriate fundamental frequency only

10.1 Optimum Recording Field

The Optimum Recording Field shall be between 89 % and 112 % of the Reference Recording Field.

Traceability to the Reference Recording Field is provided by the calibration factor supplied with each Secondary Standard Reference Tape.

10.2 Signal Amplitude

The Average Signal Amplitude at the physical recording density of 4 499,8 ftpmm shall be between 89 % and 142 % of that for the Master Standard Reference Tape.

The Average Signal Amplitude at the physical recording density of 1 499,9 ftpmm shall be between 89 % and 142 % of that for the Master Standard Reference Tape.

Traceability to the Average Signal Amplitudes of the Master Standard Reference Tape is provided by the calibration factors supplied with each Secondary Standard Reference Tape.

10.3 Resolution

The ratio of the Average Signal Amplitude at the physical recording density of 4 499,8 ftpmm to that at the physical recording density of 1 499,9 ftpmm shall be between 84 % and 119 % of the same ratio for the Master Standard Reference Tape.

Traceability to the resolution for the Master Standard Reference Tape is provided by the calibration factors supplied with each Secondary Standard Reference Tape.

10.4 Overwrite

Overwrite is the ratio of the Average Signal Amplitude of the residual of a low density recording after overwriting at a higher density to the Average Signal Amplitude of the original low density recording.

Traceability to the overwrite ratios for the Master Standard Reference Tape is provided by the calibration factors supplied with each Secondary Standard Reference Tape.

Procedure

First, a.c. erase the tape. Record at the physical density of 1 499,9 ftpmm and measure the Average Signal Amplitude. Overwrite at the physical recording density of 5 999,7 ftpmm and measure the Average Signal Amplitude of the residual 1 499,9 ftpmm signal. Repeat for the Secondary Standard Reference Tape.

Requirement

The ratio

$$\frac{\text{Residual Average Signal Amplitude at 1 499,9 ftpmm after overwriting}}{\text{Average Signal Amplitude of the original recording at 1 499,9 ftpmm}}$$

shall be less than 119 % of the same ratio for the Master Standard Reference Tape.

10.5 Ease of erasure

When a tape has been recorded at 1 499,9 ftpmm with the Test Recording Current and then passed through a longitudinal steady erasing field of 290 000 A/m, any remaining signal shall not exceed 3 % of the Standard Reference Amplitude for that density. The erasing field shall be reasonably uniform, for example, the field in the middle of a solenoid. This measurement shall be made with a band pass filter passing at least the first three harmonics.

10.6 Tape quality

10.6.1 Missing pulses

A missing pulse is a loss of read signal amplitude. A missing pulse exists when the base-to-peak read signal is 50 %, or less, of half the Average Signal Amplitude for the recording density of 2 999,9 ftpmm on the same tape.

Copyright International Organization for Standardization
Provided by IHS under license with ISO
No reproduction or networking permitted without license from IHS Not for Resale

10.6.2 Missing pulse zone

A missing pulse zone shall commence with a missing pulse and end when 5 consecutive flux transitions, which are not missing pulses, have been detected or when a length of 0,277 mm of track has been measured. If a missing pulse continues for a distance exceeding 0,277 mm, a further missing pulse zone shall result.

A missing pulse zone does not continue from one track to the next.

The missing pulse zone rate shall be less than one in $1,4 \times 10^5$ flux transitions and applies to both positive and negative azimuth tracks.

10.7 Signal-to-Noise Ratio (SNR) characteristic

The Signal-to-Noise Ratio is the average rms read signal amplitude divided by the average integrated rms noise amplitude, and expressed in decibels.

$$SNR = 20 \log \frac{\text{Average rms read signal amplitude}}{\text{Average integrated rms noise amplitude}} \text{ dB}$$

Requirement

The SNR for the tape under test (SNR_{tape}) shall be better than -2 dB relative to the SNR for the Master Standard Reference Tape (SNR_{MSRT}) when measured according to the procedure defined in annex C.

Traceability to the SNR_{MSRT} is provided by the calibration factor supplied with each Secondary Standard Reference Tape.

Copyright International Organization for Standardization
Provided by IHS under license with ISO
No reproduction or networking permitted without license from IHS
Not for Resale

11 Format

11.1 General

The smallest collection of data supported by the format is a record. A record is the smallest distinct set of data bytes supplied, e.g. from a host, for processing and recording by a tape drive system, and the smallest distinct set of data to be read from tape, reprocessed and made available, e.g. to a host, by a tape drive system. Two types of record are supported, namely Processed Records and Unprocessed Records.

A recorded tape shall contain Unprocessed Records or Processed Records or both. It may also contain Separator Marks. Processed Records are contained within logical objects which are referred to, by this International Standard, as Entities. Separator Marks may be used by the host to indicate the logical separation(s) of the data within a structuring scheme.

Entities, Unprocessed Records and Separator Marks are collected into groups. An index within each group describes that group's contents. A series of transformations, namely randomizing, interleaving, blocking, the generation and inclusion of two Reed-Solomon error correcting codes, and the translation of bytes to Channel Bits, is applied to each group prior to recording. A third Reed-Solomon error correcting code may be applied to the group; in this case, the resulting bytes are transformed and recorded in a frame that follows the group on the tape.

Each group is recorded on a set of tracks. The part of each track in which the user data, Separator Marks and associated information are recorded is called the Main Data Zone of the track. Information about the contents of the group, the location of the track(s) and the contents of the track(s) is recorded in the headers of the fragments which are included in the Main Data Zone.

In the following description all operations on the data received from the host computer, including the use of error detecting and correcting codes, but excluding processing, are described. Then the method of recording on the tape and the tape layout itself is described. However, because of the inherent characteristics of this format, where required, advance references to the tape layout will also be made in the course of the description of the operations on the data.

11.2 Basic Groups

The data to be recorded shall be grouped in Basic Groups of 384 296 bytes. Each Basic Group shall be identified by a running number allocated consecutively starting with zero. In each Basic Group the bytes are identified by a running number from 1 to 384 296.

The structure of Basic Group No. 0 is not specified by this International Standard. The data for this group is generated by the tape system (see annex M). It is recorded as the Vendor Group (see 16.5.1).

Data and Separator Marks received from the host computer shall be grouped in the Basic Groups following Basic Group No. 0 starting with Basic Group No. 1. These Basic Groups shall be structured as follows.

Note - In this International Standard, there are two types of Separator Marks which are referred to as Separator 1 and Separator 2. Some other standards, e.g. those which define an interface between a tape drive and a host computer, use the terms "file mark" and "set mark" to denote Separator Marks. It is strongly recommended that Separator 1 be equated to file mark and Separator 2 be equated to set mark.

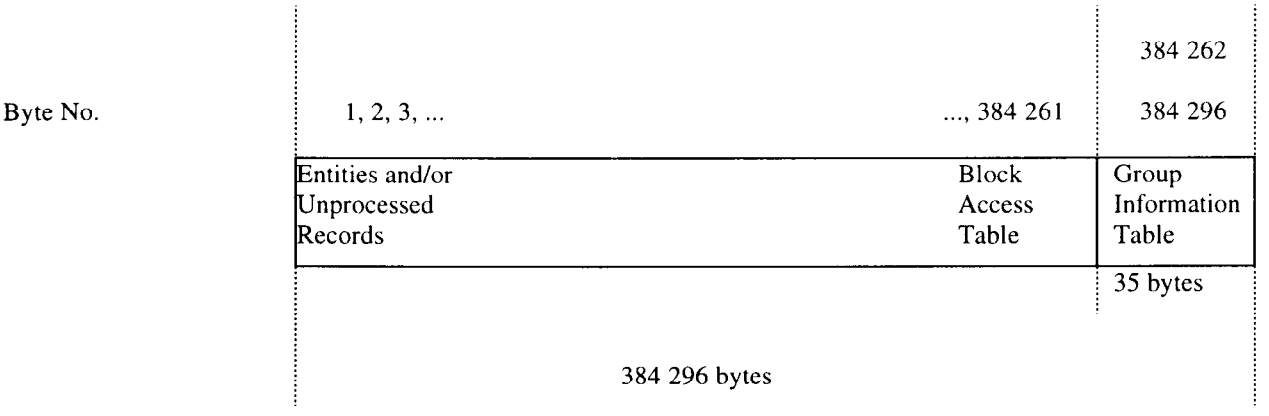

Figure 30 - Structure of a Basic Group

Copyright International Organization for Standardization
Provided by IHS under license with ISO
No reproduction or networking permitted without license from IHS
Not for Resale

Data, which comprises entities and/or Unprocessed Records, shall progress into the Basic Group from left to right (see figure 30). At the same time a part of the Basic Group, called the Block Access Table (BAT), shall progress from right to left. The Group Information Table (GIT) shall occupy the last 35 bytes of the Basic Group.

11.2.1 Entity

11.2.1.1 Content

An Entity shall comprise an Entity header and a Processed Record Sequence. The Entity header shall be 8 bytes in length and shall precede the Processed Record Sequence.

All Processed Records in an Entity shall be the result of applying the same processing algorithm to Unprocessed Records of equal length.

An Entity may span Basic Groups, provided that all of the Entity header and the first 8 bits of the Processed Record Sequence are within the same Basic Group.

In the case where an Entity spans Basic Groups, the parts thereof, within each Basic Group, are known as partial Entities. A partial Entity is either a start part, a middle part or a last part of the whole Entity - see 11.2.3.1.2, 11.2.3.1.3, 11.2.3.1.4. Within a spanned Entity, there shall be at most one Processed Record in the total set of partial Entities which are the middle part(s) (if any) and last part of that Entity, i.e. there may be a part or all of one Processed Record in that set.

The Processed Record Sequence within an Entity may also include Processed Records other than those containing data for interchange. In such a case, all of the Processed Records which do not contain data for interchange shall be located after the last Processed Record which does contain data for interchange. When reading such an Entity, the receiving system shall skip over those Processed Records which do not contain data for interchange. The number of such Processed Records need not be an integer. This condition may arise, for example, as a result of an overwrite operation starting within a previously-recorded Processed Record Sequence.

11.2.1.2 Access Points

An Entity shall contain zero or one Access Point. If present, it shall be located at the start of the first Processed Record in the Entity. The presence of an Access Point shall be indicated by a non-0 value of Byte No. 3 of the Entity header (see 11.2.1.3). An Access Point shall be relevant to processed data in that Entity; it may also be relevant to processed data in subsequent entities.

There may be an Access Point in any entire Entity or start part partial Entity. If there is one, or more, entire entities in a Basic Group, there shall be an Access Point in the first entire Entity. If there are no entire entities in a Basic Group, but there is a start part partial Entity in that Basic Group, the start part partial Entity shall contain an Access Point.

There shall be an Access Point at the start of the first Processed Record of the first Entity following

- LBOT,
- a Separator Mark,
- an Unprocessed Record ,
- a change of algorithm,
- an Entity including also Processed Records other than those containing data for interchange.

11.2.1.3 Entity header

Byte No. 1 is the first byte in the header, and Byte No. 8 is the last byte in the header, i.e. is adjacent to the Processed Record Sequence. Within a byte, bit 1 shall be the lowest-numbered bit and shall be the least significant, and bit 8 shall be the highest-numbered bit and shall be the most significant. The Entity header shall have the following layout:

Byte No. 1	bits 1 to 4 shall specify, in binary notation, the length of the Entity header in bytes, viz. eight. bits 5 to 8 shall be set to ZERO.
Byte No. 2	all bits shall be set to ZERO.
Byte No. 3	shall specify in binary notation: - either the value 0, indicating that there is no Access Point within the Entity, or - any other value, indicating that there is an Access Point within the Entity, and specifying the identifier of the registered algorithm according to ISO/IEC 11576. This format supports only those registered algorithms which have an identifier in the range 2 to 254. The value 255 in this byte indicates that the algorithm used is not registered.

Copyright International Organization for Standardization
Provided by IHS under license with ISO
No reproduction or networking permitted without license from IHS
Not for Resale

Bytes No. 4 to 6 shall specify in binary notation the length in bytes of the Unprocessed Record which was transformed by processing into the first Processed Record of the Entity (see 11.2.1.1, 2nd paragraph). This length shall not equal 0. Byte No. 4 shall be the most significant, Byte No. 6 shall be the least significant.

Bytes No. 7 and 8 shall specify in binary notation the number of Processed Records in the Entity which contain data for interchange. This number shall not equal 0. Byte No. 7 shall be more significant than Byte No. 8.

11.2.2 Group Information Table

The Group Information Table shall have the following layout.

Table 1 - Group Information Table

Byte positions	Length in bytes	Name of the field
384 296 to 384 294	3	Group Number of the previous Separator 2
384 293 to 384 291	3	Count of Separator 2s
384 290 to 384 288	3	Group Number of the previous Separator 1
384 287 to 384 285	3	Count of Separator 1s
384 284 to 384 282	3	Group Number of the previous record
384 281 to 384 279	3	Count of records in the current Basic Group
384 278 and 384 276	3	Separator 2 count
384 275 to 384 272	4	Separator 1 count
384 271 to 384 268	4	Record count
384 267 to 384 265	3	Block Access Table count
384 264 to 384 262	3	Group Number

Within each field of table 1 the most-significant byte shall be in the lowest-numbered byte position and the least-significant byte shall be in the highest-numbered byte position.

11.2.2.1 Group number of the previous Separator 2 field

This field shall be a 3-byte field. It shall specify in binary notation the running number of the previous Basic Group which contains the last written Separator 2. If no such Basic Group exists, this field shall be set to all ZEROs.

Copyright International Organization for Standardization
Provided by IHS under license with ISO
No reproduction or networking permitted without license from IHS Not for Resale

11.2.2.2 Count of Separator 2s field

This field shall be a 3-byte field. It shall specify in binary notation the number of Separator 2s written in the current Basic Group.

11.2.2.3 Group number of the previous Separator 1 field

This field shall be a 3-byte field. It shall specify in binary notation the running number of the previous Basic Group which contains the last written Separator 1. If no such Basic Group exists, this field shall be set to all ZEROs.

11.2.2.4 Count of Separator 1s field

This field shall be a 3-byte field. It shall specify in binary notation the number of Separator 1s written in the current Basic Group.

11.2.2.5 Group number of the previous record field

This field shall be a 3-byte field. It shall specify in binary notation the running number of the highest-numbered previous Basic Group in which a Separator Mark, an Access Point or the beginning of an Unprocessed Record occurred. If no such Basic Group exists, this field shall be set to all ZEROs.

11.2.2.6 Count of records in the current Basic Group field

This field shall be a 3-byte field. It shall specify in binary notation the sum of the following:

- the number of Separator Mark entries in the BAT (see 11.2.3) of the current Basic Group
- the number of Total Count of Unprocessed Record entries in the BAT of the current Basic Group
- the number of entire Unprocessed Record entries in the BAT of the current Basic Group
- the sum of the numbers in Bytes No. 7 and No. 8 of the Entity headers of all entities for which there is an entire Entity entry in the BAT of the current Basic Group,
- the value which is 1 less than the number in Bytes No. 7 and No. 8 of the Entity header of the Entity for which there is a start part of Entity entry in the BAT of the current Basic Group, if such an entry exists,
- the number of Total Count of Entity entries in the BAT of the current Basic Group.

11.2.2.7 Separator 2 count field

This field shall be a 3-byte field. It shall specify in binary notation the number of Separator 2s written since the LBOT including those in the current Basic Group.

11.2.2.8 Separator 1 count field

This field shall be a 4-byte field. It shall specify in binary notation the number of Separator 1s written since the LBOT including those in the current Basic Group.

11.2.2.9 Record count field

This field shall be a 4-byte field. It shall specify in binary notation the sum of the numbers in the Count of records in the current Basic Group fields of the GITs of all Basic Groups since LBOT, up to and including the current Basic Group.

11.2.2.10 Block Access Table count field

This field shall be a 3-byte field. It shall specify in binary notation the number of entries in the Block Access Table.

11.2.2.11 Group Number field

This field shall be a 3-byte field. It shall specify in binary notation the running number of the current Basic Group.

11.2.3 Block Access Table (BAT)

The BAT shall contain one or more entries for each Entity, Unprocessed Record and Separator Mark of the Basic Group. Entities and Unprocessed Records not entirely contained in the Basic Group shall also be identified by one or more entries. The first entry shall be written immediately before the Group Information Table, in byte positions 384 258 to 384 261. Each entry shall be a 4-byte field, structured as shown in figure 31. The 1st byte shall be in the lowest-numbered byte position and the 4th byte shall be in the highest-numbered byte position.

Copyright International Organization for Standardization
Provided by IHS under license with ISO
No reproduction or networking permitted without license from IHS Not for Resale

Entry of the Block Access Table										
Flag Byte								Count		
1st byte								2nd byte	3rd byte	4th byte
b8	b7	b6	b5	b4	b3	b2	b1	(MSB)		(LSB)

Figure 31 - Block Access Table

Depending on the setting of the Flag Byte, the 3-byte Count field shall express in binary notation a number not greater than 2^{24}-1 as specified below. This Standard specifies twelve settings of the Flag Byte. Other settings are prohibited by this Standard.

11.2.3.1 Block Access Table entries, setting of the Flag Bytes

11.2.3.1.1 0111X011 : Entire Entity

This entry relates to an Entity and shall specify that the Entity starts and ends in the current Basic Group. The count field shall specify the number of bytes in the Entity.

11.2.3.1.2 0101X010 : Start part of Entity

This entry relates to an Entity and shall specify that the Entity starts in the current Basic Group and ends in a subsequent Basic Group. The count field shall specify the number of bytes in the partial Entity which is in the current Basic Group.

11.2.3.1.3 0101X000 : Middle part of Entity

This entry relates to an Entity and shall specify that the Entity starts in a previous Basic Group and ends in a subsequent Basic Group. The count field shall specify the number of bytes in the partial Entity which is in the current Basic Group.

11.2.3.1.4 0111X000 : Last part of Entity

This entry relates to an Entity and shall specify that the Entity starts in a previous Basic Group and ends in the current Basic Group. The count field shall specify the number of bytes in the partial Entity which is in the current Basic Group. This entry shall be immediately followed in the BAT of the current Basic Group by an entry for Total Count of Entity.

11.2.3.1.5 0001X001 : Total Count of Entity

This entry relates to the same Entity as that of the immediately preceding entry for last part of Entity. The count field shall specify the total number of bytes in the Entity.

11.2.3.1.6 0110X011 : Entire Unprocessed Record

This entry relates to an Unprocessed Record and shall specify that the record starts and ends in the current Basic Group. The count field shall specify the number of bytes of the record.

11.2.3.1.7 0100X010 : Start part of Unprocessed Record

This entry relates to an Unprocessed Record and shall specify that the record starts in the current Basic Group and ends in a subsequent Basic Group. The count field shall specify the number of bytes in that part of the record which is in the current Basic Group.

11.2.3.1.8 0100X000 : Middle part of Unprocessed Record

This entry relates to an Unprocessed Record and shall specify that the record starts in a previous Basic Group and ends in a subsequent Basic Group. The count field shall specify the number of bytes in that part of the record which is in the current Basic Group.

11.2.3.1.9 0110X000 : Last part of Unprocessed Record

This entry relates to an Unprocessed Record and shall specify that the record starts in a previous Basic Group and ends in the current Basic Group. The count field shall specify the number of bytes in that part of the record which is in the current Basic Group.

11.2.3.1.10 0000X001 : Total Count of Unprocessed Record

This entry relates to an Unprocessed Record and shall specify

- if this entry is preceded by a Last part of Unprocessed Record entry, the count field shall specify the total number of bytes of the Unprocessed Record ;

Copyright International Organization for Standardization
Provided by IHS under license with ISO
No reproduction or networking permitted without license from IHS Not for Resale

- if the last two entries of the BAT of the previous Basic Group are a Last part of Unprocessed Record entry and a skip entry (see 11.2.3.1.12), this entry shall be the first entry of the BAT of the current Basic Group. The count field shall specify the total number of bytes of the Unprocessed Record .

11.2.3.1.11 0000X111 : Separator Mark

This entry shall specify that the record is a Separator record. The count field shall specify the number zero if the record is a Separator 1 record and the number one if the record is a Separator 2 record.

11.2.3.1.12 1000X000 : Skip

There shall be a Skip entry as the last entry of the Block Access Table of each Basic Group. This entry indicates that the last byte of user data in the current Basic Group has been reached. The count field shall specify the remaining number of bytes in the Basic Group. Thus the minimum number that can be specified by the count field shall be the number of bytes of the BAT plus 35.

11.2.3.1.13 Count fields

The sum of the numbers specified in the count fields of those of the types of entry in the following list which are present in the Block Access Table shall be 384 296. The list comprises: Skip, entire Unprocessed Record , start part of Unprocessed Record , middle part of Unprocessed Record last part of Unprocessed Record , entire Entity, start part of Entity, middle part of Entity, last part of Entity.

11.2.3.1.14 Bit b4 - After Early Warning Point (AEWP)

In each of the entries specified in 11.2.3.1.1 to 11.2.3.1.12 the fourth bit, the After Early Warning Point bit, is indicated as indifferent as far as the meaning of the entry is concerned. Its setting shall be as follows

- before EWP (see 16.8 and 17.1.2.4) it shall be set to ZERO;
- after EWP it shall be set to ONE in the current entry and all following BAT entries of the current Basic Group and in all BAT entries of all following Basic Groups.

11.2.3.2 Valid sequences of entries of the Block Access Table

These are specified by table 2, in which states and actions are described within rectangles, and the entries (as designated by the setting of the Flag Byte) are described within ellipses. The terms "spanned Entity" and "spanned Unprocessed Record " designate respectively an Entity or Unprocessed Record which starts in one Basic Group and ends in a subsequent Basic Group.

Table 2 shows only those entries which are valid as the next entry to be encountered in each state or after each action. All other entries are invalid.

Note that a special case is permitted, for spanned Unprocessed Records only, in which the total count of Unprocessed Record entry may be placed as the first item in the Block Access Table of the subsequent Basic Group.

Copyright International Organization for Standardization
Provided by IHS under license with ISO
No reproduction or networking permitted without license from IHS Not for Resale

Table 2 - Valid sequences of entries in the Block Access Table

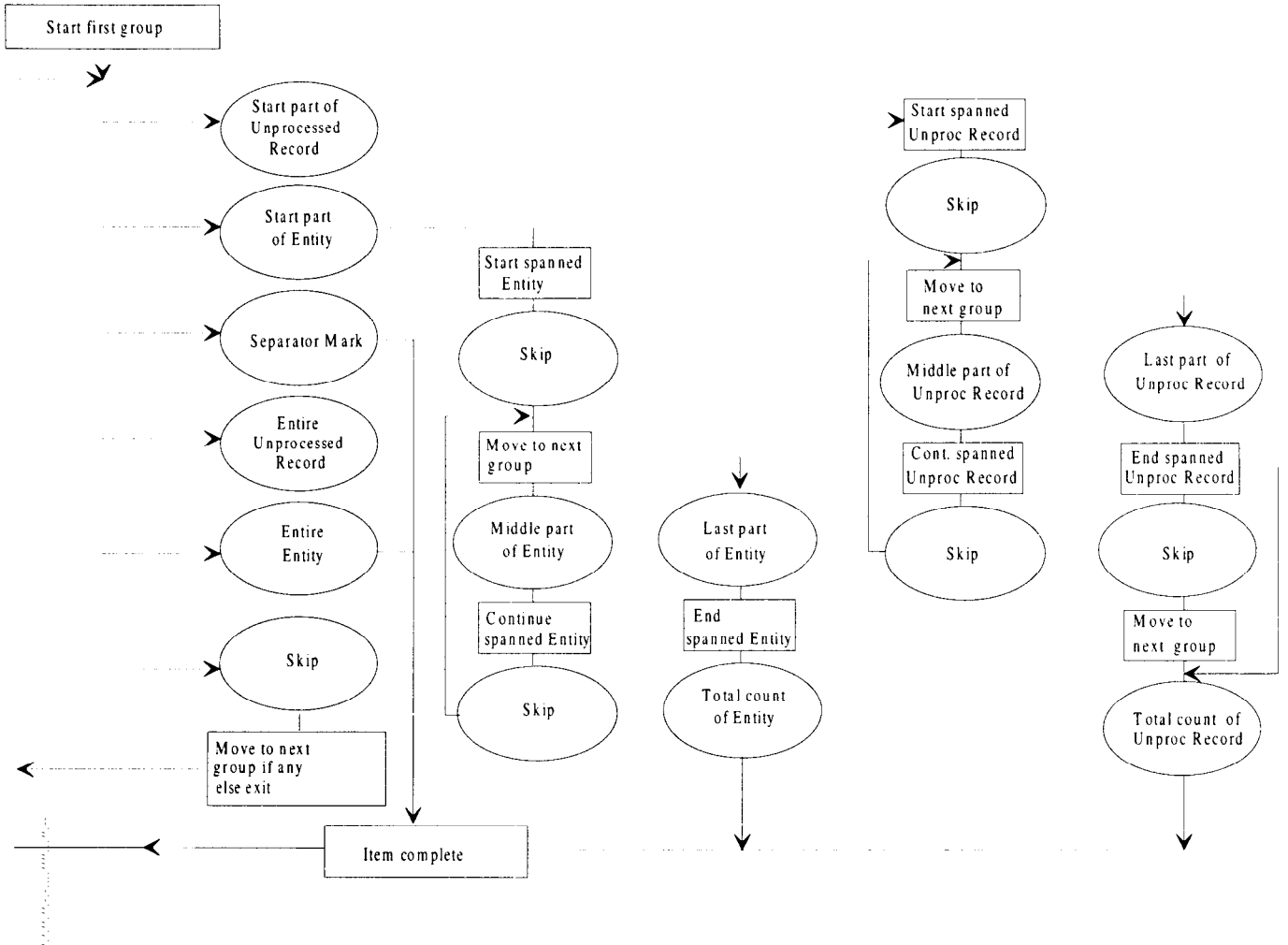

11.3 Sub-Groups

11.3.1 G1 Sub-Group

When a Basic Group has been completed, it shall be split into 22 G1 Sub-Groups of 17 468 bytes numbered from 0 to 17 467. Each G1 Sub-Group shall have a running number in the range 1 to 22.

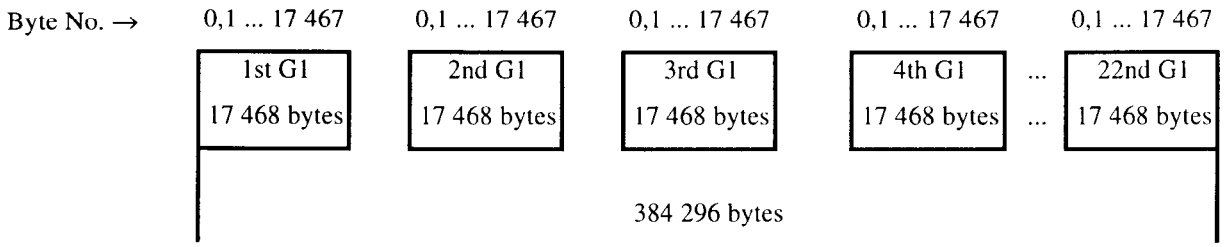

Figure 32 - G1 Sub-Groups

11.3.2 G2 Sub-Group - randomizing

The bytes of each G1 Sub-Group shall be submitted to an Exclusive OR operation together with a sequence of bits which is the output of the shift register shown in figure 33. Before each G1 Sub-Group, the shift register shall be set as shown.

Copyright International Organization for Standardization
Provided by IHS under license with ISO
No reproduction or networking permitted without license from IHS
Not for Resale

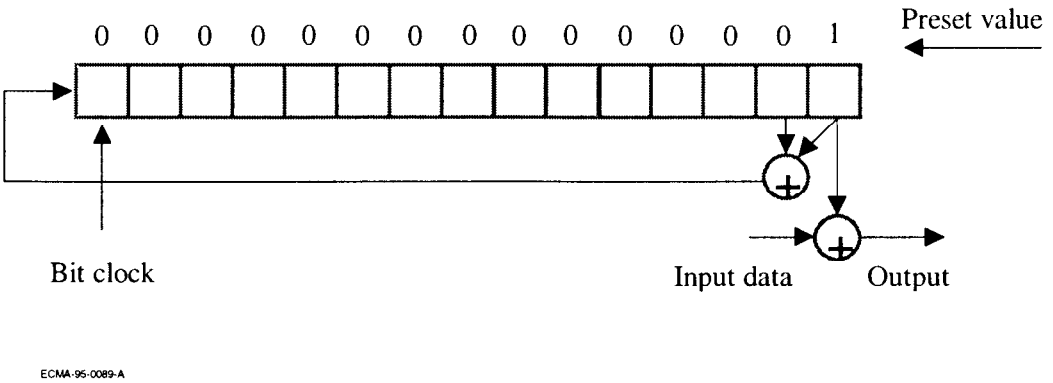

Figure 33 - Shift register

For each byte the least significant bit, i.e. bit b1 is input first. The logical operators are Exclusive ORs. The result of this operation is a G2 Sub-Group in which all bytes are numbered from D0 to D17 467. Their sequence is the same as before the randomizing operation, i.e. as in the G1 Sub-Group.

11.3.3 G3 Sub-Group

Each G2 Sub-Group of 17 468 bytes shall be re-arranged into a G3 Sub-Group of 17 472 bytes.

Bytes D_0 to $D_{8\,733}$ of a G2 Sub-Group are grouped in a track A of the G3 Sub-Group. Bytes $D_{8\,734}$ to $D_{17\,467}$ are grouped in a track B of the G3 Sub-Group.

In each track the bytes are allocated to a lower or an upper byte as follows (see figure 34).

Even numbered bytes are allocated to a lower byte of the G3 Sub-Group.

Odd numbered bytes are allocated to an upper byte of the G3 Sub-Group.

Thus, each track contains 4 367 byte pairs. Each byte pair is allocated to a word of the track, starting with word No. 1. The first word of the track, word No. 0, contains a 2-byte header.

Track name		A		B	
Byte name		lower	upper	lower	upper
Bit number		8 7 6 5 4 3 2 1	8 7 6 5 4 3 2 1	8 7 6 5 4 3 2 1	8 7 6 5 4 3 2 1
Header	0	0 0 0 0 DF-ID	LF-ID	0 0 0 0 DF-ID	LF-ID
	1	D_0	D_1	$D_{8\,734}$	$D_{8\,735}$
	2	D_2	D_3	$D_{8\,736}$	$D_{8\,737}$
	3	D_4	D_5	$D_{8\,738}$	$D_{8\,739}$
	. . .	. . .	. . .	. . .	. . .
	4 366	$D_{8\,730}$	$D_{8\,731}$	$D_{17\,464}$	$D_{17\,465}$
	4 367	$D_{8\,732}$	$D_{8\,733}$	$D_{17\,466}$	$D_{17\,467}$
Word number					

Figure 34 - G3 Sub-Group

11.3.3.1 Header

Word No. 0 constitutes a 6-field header.

Copyright International Organization for Standardization
Provided by IHS under license with ISO
No reproduction or networking permitted without license from IHS
Not for Resale

11.3.3.1.1 Data format ID (DF-ID)

In both tracks, this field shall be a 4-bit field. It shall be set to 0010.

11.3.3.1.2 Bits 5-8 of the lower byte of both tracks

These bits shall be set to all ZEROs.

11.3.3.1.3 Logical Frame ID (LF-ID)

In both tracks this field shall be an 8-bit field. Bits 6 to 1 shall express in binary notation the Logical Frame Number, which is the running number of the G1 Sub-Group.

- if bits 6 to 1 express a number in the range 1 to 21:

  . bit 7 shall be set to ZERO, and
  . bit 8 shall be set to ZERO

- if bits 6 to 1 express the number 22:

  . bit 7 shall be set to ZERO, and
  . bit 8 shall be set to:

  - ♦ ZERO to indicate that there is a 23rd Sub-Group containing the check bytes of the ECC3 (see 16.5.3), or
  - ♦ ONE, to indicate that there is no such 23rd Sub-Group

- if bits 6 to 1 express the number 23

  . bit 7 shall be set to ONE, and
  bit 8 shall be set to ONE

  thus indicating that the Sub-Group contains the check bytes of the ECC3, and that the Sub-Group is the last of the sequence.

11.3.3.1.4 Byte identification

Each byte of a G3 Sub-Group is now identified by

- its track (A or B)
- its byte name (lower or upper)
- its word number (from 0 to 4 367)

Thus, the following notation is introduced.

A_{il} indicates the byte identified by the lower byte of track A in the i-th word.

A_{iu} indicates the byte identified by the upper byte of track A in the i-th word.

B_{il} indicates the byte identified by the lower byte of track B in the i-th word.

B_{iu} indicates the byte identified by the upper byte of track B in the i-th word.

11.3.4 G4 Sub-Group

Each G3 Sub-Group shall be transformed into a G4 Sub-Group consisting of two twin arrays as follows.

A Sign, a Fragment Number and a Serial Number shall be allocated to each byte using the following formulae.

Sign: $(-1)^a$

Fragment number: $i \pmod{78} + 9$

Serial number: $(2(u + \text{int}\frac{i}{78})) - (\text{int}\frac{i}{78}) \pmod 2$

where

int = indicates the integer part of the quotient
i = 0 to 4 367
a = 0 for the A_{iu} and A_{il} bytes
a = 1 for the B_{iu} and B_{il} bytes
u = 0 for the A_{iu} and B_{iu} bytes

Copyright International Organization for Standardization
Provided by IHS under license with ISO
No reproduction or networking permitted without license from IHS Not for Resale

u = 1 for the A_{il} and B_{il} bytes

Processing a G3 Sub-Group in this way yields twin arrays PLUS and MINUS in which each byte is identified by its Fragment Number (from 0 to 95) and its Serial Number (from 0 to 123). Bytes from track A are placed in the array PLUS. Bytes from track B are placed in the array MINUS.

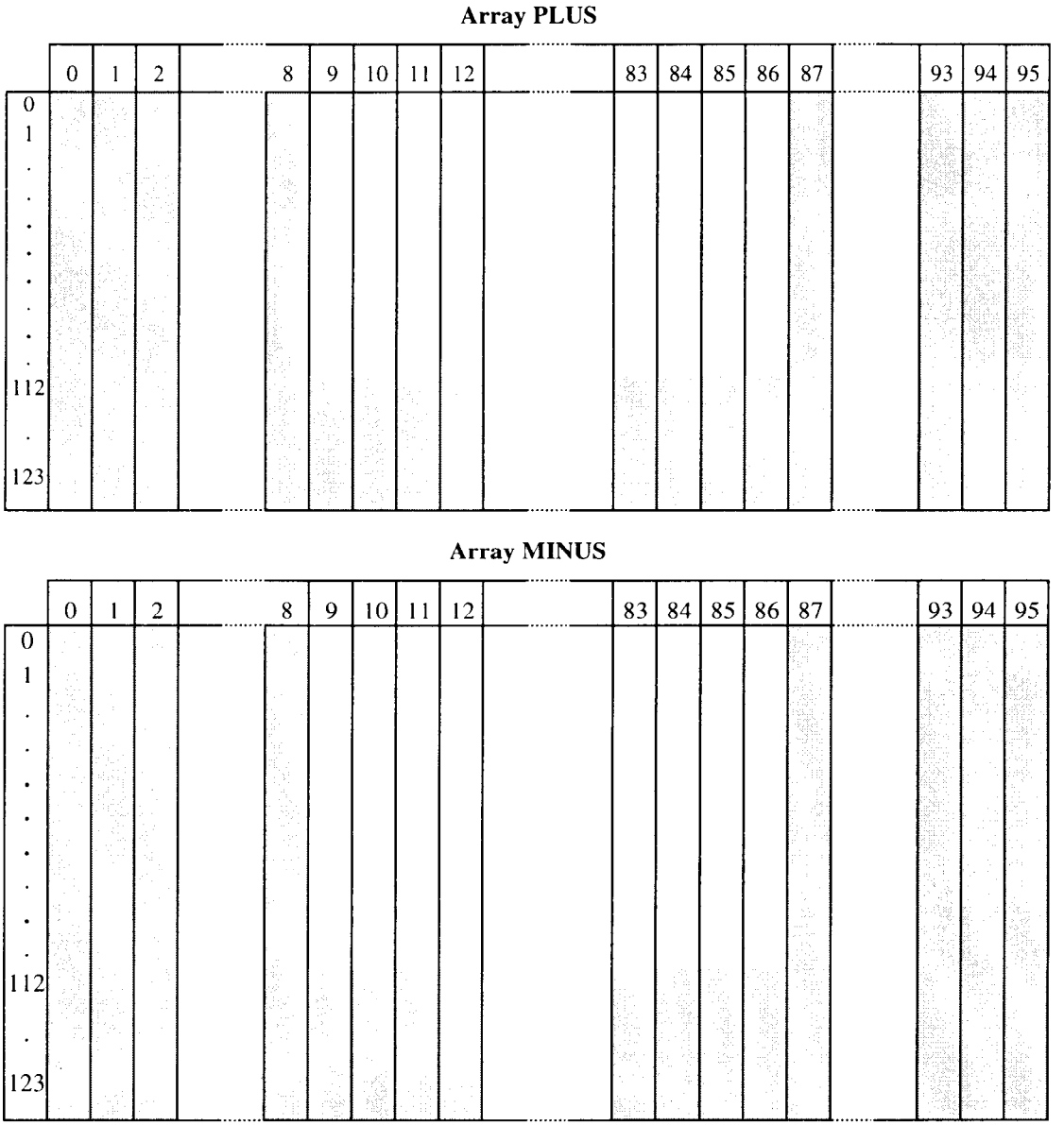

Figure 35 - Twin arrays of a G4 Sub-Group before C1 and C2 computation

Applying the above formulae to the bytes of a G3 Sub-Group leaves a number of positions unoccupied in both arrays. These positions, shown shaded in figure 35, are:

- all bytes having Serial Numbers in the range 112 to 123 in all Fragments having a Fragment Number in the range 9 to 86,
- all bytes in all Fragments having a Fragment Number in the range 0 to 8 or in the range 87 to 95.

The bytes to be allocated to these positions shall be obtained by computing ECC bytes obtained from two error detection and correction codes C1 and C2 computed over the bytes already allocated into the two twin arrays.

Copyright International Organization for Standardization
Provided by IHS under license with ISO
No reproduction or networking permitted without license from IHS
Not for Resale

The C2 bytes shall be computed for the byte positions with Serial Numbers in the range 0 to 111 in each Fragment having a Fragment Number in the range 0 to 8 or in the range 87 to 95 from the bytes with the same Serial Number in all the other Fragments.

The C1 bytes shall then be computed for byte positions with Serial Numbers in the range 112 to 123 in all Fragments from all the other bytes in the same Fragment. In Fragments with a Fragment Number in the range 0 to 8 or in the range 87 to 95, these C1 bytes shall be computed from the C2 bytes previously computed.

These two computations yield the bytes for the byte positions indicated by the shaded portions of the two twin arrays of figure 35.

- C1 shall be a GF (2^8) Reed-Solomon Code (62, 56, 7)
- C2 shall be a GF (2^8) Reed-Solomon Code (32, 26, 7)

Calculation in a GF (2^8) shall be defined by :

$$G(x) = x^8 + x^4 + x^3 + x^2 + 1$$

A primitive element α in GF (2^8) is 00000010.

The interleave depth of C1 shall be two bytes, that of C2 shall be three Fragments. The ECC bytes shall satisfy :

$$H_P \times V_P = 0$$

$$H_Q \times V_Q = 0$$

The generator polynomials shall be :

$$G_P(x) = \prod_{i=0}^{i=5} (x - \alpha^i)$$

$$G_Q(x) = \prod_{i=0}^{i=5} (x - \alpha^i)$$

$$H_P = \begin{bmatrix} 1 & 1 & 1 & \dots & 1 & 1 & 1 \\ \alpha^{61} & \alpha^{60} & \alpha^{59} & \dots & \alpha^{2} & \alpha & 1 \\ \alpha^{122} & \alpha^{120} & \alpha^{118} & \dots & \alpha^{4} & \alpha^{2} & 1 \\ \alpha^{183} & \alpha^{180} & \alpha^{177} & \dots & \alpha^{6} & \alpha^{3} & 1 \\ \alpha^{244} & \alpha^{240} & \alpha^{236} & \dots & \alpha^{8} & \alpha^{4} & 1 \\ \alpha^{50} & \alpha^{45} & \alpha^{40} & \dots & \alpha^{10} & \alpha^{5} & 1 \end{bmatrix}$$

Note - The last row of Hp may be equivalently written as [α^{305} α^{300} α^{295} ..... α^{10} α^{5} α^{1}]. The identity α^{255}= 1 has been used to simplify the matrix elements.

Copyright International Organization for Standardization
Provided by IHS under license with ISO
No reproduction or networking permitted without license from IHS Not for Resale

$$H_Q = \begin{bmatrix} 1 & 1 & 1 & 1 & \ldots\ldots & 1 & 1 & 1 \\ \alpha^{31} & \alpha^{30} & \alpha^{29} & \alpha^{28} & \ldots\ldots & \alpha^{2} & \alpha & 1 \\ \alpha^{62} & \alpha^{60} & \alpha^{58} & \alpha^{56} & \ldots\ldots & \alpha^{4} & \alpha^{2} & 1 \\ \alpha^{93} & \alpha^{90} & \alpha^{87} & \alpha^{84} & \ldots\ldots & \alpha^{6} & \alpha^{3} & 1 \\ \alpha^{124} & \alpha^{120} & \alpha^{116} & \alpha^{112} & \ldots\ldots & \alpha^{8} & \alpha^{4} & 1 \\ \alpha^{155} & \alpha^{150} & \alpha^{145} & \alpha^{140} & \ldots\ldots & \alpha^{10} & \alpha^{5} & 1 \end{bmatrix}$$

$$V_P = \begin{bmatrix} D_{k,l} \\ D_{k,l+2} \\ D_{k,l+4} \\ D_{k,l+6} \\ D_{k,l+8} \\ D_{k,l+10} \\ D_{k,l+12} \\ D_{k,l+14} \\ D_{k,l+16} \\ D_{k,l+18} \\ D_{k,l+20} \\ D_{k,l+22} \\ D_{k,l+24} \\ D_{k,l+26} \\ D_{k,l+28} \\ D_{k,l+30} \\ \cdots \\ D_{k,l+94} \\ D_{k,l+96} \\ D_{k,l+98} \\ D_{k,l+100} \\ D_{k,l+102} \\ D_{k,l+104} \\ D_{k,l+106} \\ D_{k,l+108} \\ D_{k,l+110} \\ P_{k,l+112} \\ P_{k,l+114} \\ P_{k,l+116} \\ P_{k,l+118} \\ P_{k,l+120} \\ P_{k,l+122} \end{bmatrix} \quad V_Q = \begin{bmatrix} Q_{m,n} \\ Q_{m+3,n} \\ Q_{m+6,n} \\ D_{m+9,n} \\ D_{m+12,n} \\ D_{m+15,n} \\ D_{m+18,n} \\ D_{m+21,n} \\ D_{m+24,n} \\ D_{m+27,n} \\ D_{m+30,n} \\ D_{m+33,n} \\ D_{m+36,n} \\ D_{m+39,n} \\ D_{m+42,n} \\ D_{m+45,n} \\ D_{m+48,n} \\ D_{m+51,n} \\ D_{m+54,n} \\ D_{m+57,n} \\ D_{m+60,n} \\ D_{m+63,n} \\ D_{m+66,n} \\ D_{m+69,n} \\ D_{m+72,n} \\ D_{m+75,n} \\ D_{m+78,n} \\ D_{m+81,n} \\ D_{m+84,n} \\ Q_{m+87,n} \\ Q_{m+90,n} \\ Q_{m+93,n} \end{bmatrix}$$

Copyright International Organization for Standardization
Provided by IHS under license with ISO
No reproduction or networking permitted without license from IHS
Not for Resale

where

$P_{i,j}$ = C1 bytes

$Q_{i,j}$ = C2 bytes

i = Fragment Number

j = Serial Number

For C1: $k = 0, 1, ..., 95$

$l = 0,1$

if $k = 0, 1, ..., 8$ or $k = 87, 88, ..., 95$, then D_{ij} in V_P is read as Q_{ij}

For C2: $m = 0, 1, 2$

$n = 0, 1, ..., 111$

11.3.5 Main Data Fragment

Each Fragment of a G4 Sub-Group shall be transformed into a 132-byte Main Data Fragment by prefixing an 8-byte header. The byte of the header which contains the Fragment ID field shall be the first byte of the Main Data Fragment.

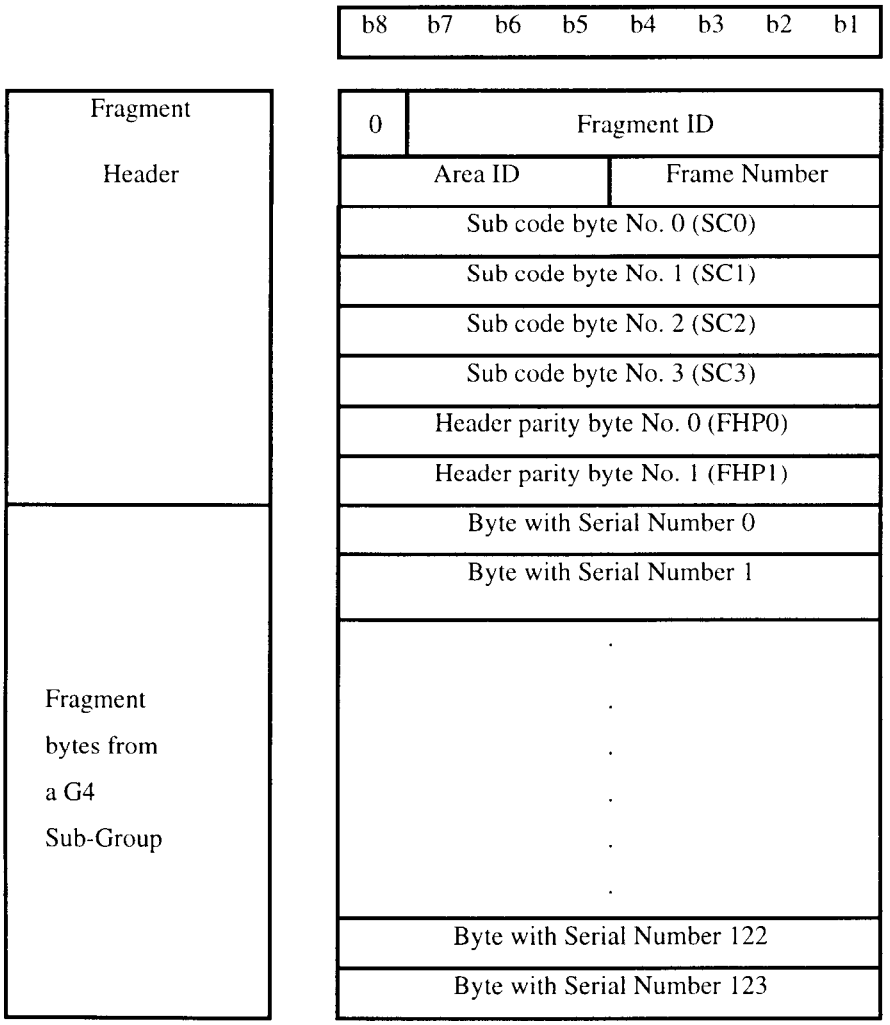

Figure 36 - Main Data Fragment

Copyright International Organization for Standardization
Provided by IHS under license with ISO
No reproduction or networking permitted without license from IHS
Not for Resale

11.3.5.1 Fragment Header

11.3.5.1.1 Fragment ID

The Fragment ID field shall specify in binary notation the Fragment Number, from 0 to 95, of the current Fragment.

11.3.5.1.2 Area ID

The Area ID shall identify the current area of the tape. See 16. The field settings shall be as follows

0000 : Device Area
X001: Reference Area
X010: System area
X100: Data Area
X101: EOD Area
Other settings of this field are prohibited by this International Standard.

For a tape with a Single Data Space (see 16), bit X shall be set to ONE. For a tape with two partitions (see 17), bit X shall be ONE for Partition 0 and shall be ZERO for Partition 1.

11.3.5.1.3 Frame Number

The Frame Number shall specify in binary notation a running number which shall be incremented (mod 16) between consecutive frames. Repetitions and discontinuities are allowed at append points (see 16.5.5) and within the Position Tolerance Bands (see 16.3 and 16.4.4).

11.3.5.1.4 Sub code

Four bytes of the Fragment Header shall be used to contain Sub code information. See 11.4.

11.3.5.1.5 Fragment Header Parity

The Fragment Header parity bytes shall be computed using an extended Reed-Solomon Code.

Calculation in a GF (2^8) shall be defined by :

$$G(x) = x^8 + x^4 + x^3 + x^2 + 1$$

A primitive element α in GF (2^8) is 00000010.

The Fragment Header parity bytes shall satisfy :

$$H_S \times V_S = 0$$

$$H_S = \begin{bmatrix} 1 & 1 & 1 & 1 & 1 & 1 & 1 & 0 \\ \alpha^5 & \alpha^4 & \alpha^3 & \alpha^2 & \alpha & 1 & 0 & 1 \end{bmatrix}$$

$$V_S = \begin{bmatrix} \text{FH0} \\ \text{FH1} \\ \text{SC0} \\ \text{SC1} \\ \text{SC2} \\ \text{SC3} \\ \text{FHP0} \\ \text{FHP1} \end{bmatrix}$$

where FH0 is the byte of the header which contains the Fragment ID field and FH1 is the byte of the header which contains the Area ID and Frame Number fields.

Copyright International Organization for Standardization
Provided by IHS under license with ISO
No reproduction or networking permitted without license from IHS
Not for Resale

11.3.6 Summary of the transformation of a Basic Group

Each Basic Group has been transformed into 22 G4 Sub-Groups. Each G4 Sub-Group consists of two arrays of 96 Fragments each. Each of these Fragments has been transformed into a Main Data Fragment. Thus a Basic Group is transformed into 22 x 2 x 96 = 4 224 Main Data Fragments before being recorded on the tape.

11.4 Sub code Information

The Sub code information shall be embedded along each track within the Fragment Headers. It shall specify

- the running number of the Basic Group,
- the number of Separator 1's written since the LBOT
- the number of Separator 2's written since the LBOT
- the number of Records written since the LBOT
- information about the track contents
- information about the history of the tape

Sub code information shall be arranged as 4-byte Pack Items. The identification number of the Pack Item contained within each Fragment Header shall be calculated as Fragment ID mod 8 or Fragment ID mod 16. See 11.5.

11.4.1 Pack Item Number 0

	b8	b7	b6	b5	b4	b3	b2	b1
SC 0	Group Number (MSB)							
SC 1	Group Number							
SC 2	Group Number (LSB)							
SC 3	LF-ID							

Figure 37 - Pack Item Number 0

11.4.1.1 SC 0,1,2

These bytes shall specify in binary notation the Group Number recorded in the Group Information Table (see 11.2.2).

11.4.1.2 SC 3

This byte shall have the same setting as the Logical Frame ID of the G1 Sub-Group (see 11.3.3.1.3) to which this Pack Item refers.

11.4.2 Pack Item Number 1

	b8	b7	b6	b5	b4	b3	b2	b1
SC 0	Separator 1 Count (MSB)							
SC 1	Separator 1 Count							
SC 2	Separator 1 Count							
SC 3	Separator 1 Count (LSB)							

Figure 38 - Pack Item Number 1

11.4.2.1 SC 0,1,2,3

These bytes shall specify the Separator 1 Count recorded in the Group Information Table (see 11.2.2).

Copyright International Organization for Standardization
Provided by IHS under license with ISO
No reproduction or networking permitted without license from IHS
Not for Resale

11.4.3 Pack Item Number 2

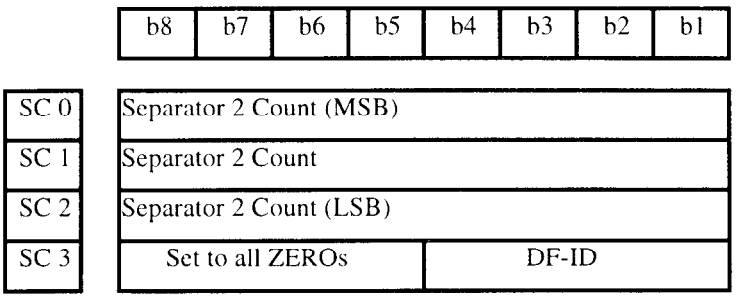

Figure 39 - Pack Item Number 2

11.4.3.1 SC 0,1,2

These bytes shall specify the Separator 2 Count as recorded in the Group Information Table (see 11.2.2).

11.4.3.2 SC 3

Bits b1 to b4 of this byte shall have the same setting as the Data Format ID of the current G3 Sub Group (see 11.3.3.1.1). Bits b5 to b8 shall be set to all ZEROs.

11.4.4 Pack Item Number 3

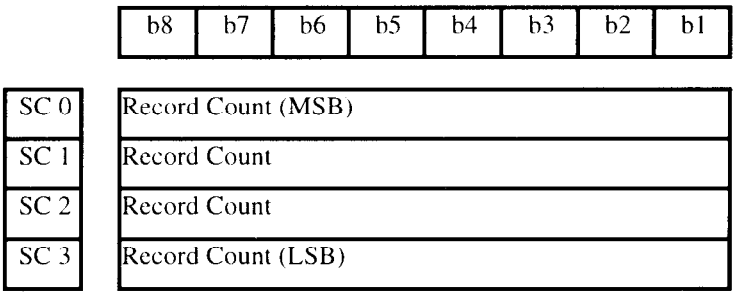

Figure 40 - Pack Item Number 3

11.4.4.1 SC 0,1,2,3

These bytes shall specify the Record Count recorded in the Group Information Table (see 11.2.2).

11.4.5 Pack Item Number 4

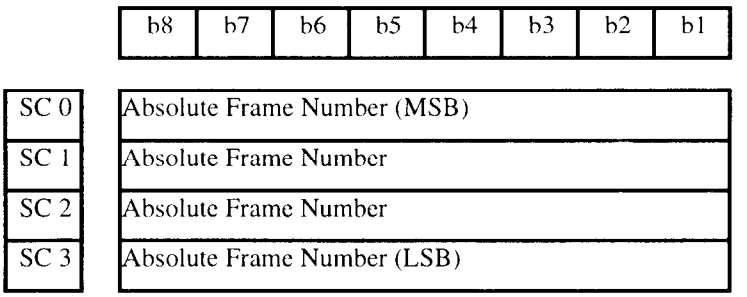

Figure 41 - Pack Item Number 4

Copyright International Organization for Standardization
Provided by IHS under license with ISO
No reproduction or networking permitted without license from IHS
Not for Resale

11.4.5.1 SC 0,1,2,3

These bytes shall specify a running number, the Absolute Frame Number, of the current frame, starting with 1 for the first frame after LBOT.

11.4.6 Pack Item Number 5

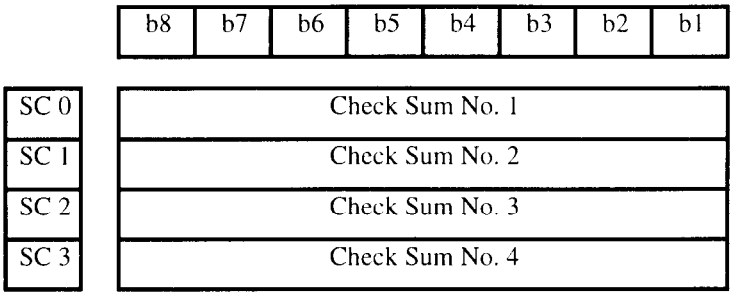

Figure 42 - Pack Item Number 5

11.4.6.1 SC 0

For each bit position of this byte the content shall be the sum (mod 2) of the corresponding bits of the upper byte of word No. 0 of track A of the G3 Sub-Group (see 11.3.3) identified by SC 3 of Pack Item No. 0 and the corresponding bits of the bytes of the G1 Sub-Group to which this Pack Item refers which have the indices

$\mathcal{D}_{2i+1}$ where $i = 0, 1, 2, ..., 4\,366$.

11.4.6.2 SC 1

For each bit position of this byte the content shall be the sum (mod 2) of the corresponding bits of the lower byte of word No. 0 of track A of the G3 Sub-Group (see 11.3.3) identified by SC 3 of Pack Item No. 0 and the corresponding bits of the bytes of the G1 Sub-Group to which this Pack Item refers which have the indices

$\mathcal{D}_{2i}$ where $i = 0, 1, 2, ..., 4\,366$.

11.4.6.3 SC 2

For each bit position of this byte the content shall be the sum (mod 2) of the corresponding bits of the upper byte of word No. 0 of track B of the G3 Sub-Group (see 11.3.3) identified by SC 3 of Pack Item No. 0 and the corresponding bits of the bytes of the G1 Sub-Group to which this Pack Item refers which have the indices

$\mathcal{D}_{2i+1}$ where $i = 4\,367, 4\,368, ..., 8\,733$.

11.4.6.4 SC 3

For each bit position of this byte the content shall be the sum (mod 2) of the corresponding bits of the lower byte of word No. 0 of track B of the G3 Sub-Group (see 11.3.3) identified by SC 3 of Pack Item No. 0 and the corresponding bits of the bytes of the G1 Sub-Group to which this Pack Item refers which have the indices

$\mathcal{D}_{2i}$ where $i = 4\,367, 4\,368, ..., 8\,733$.

11.4.7 Pack Item Number 6

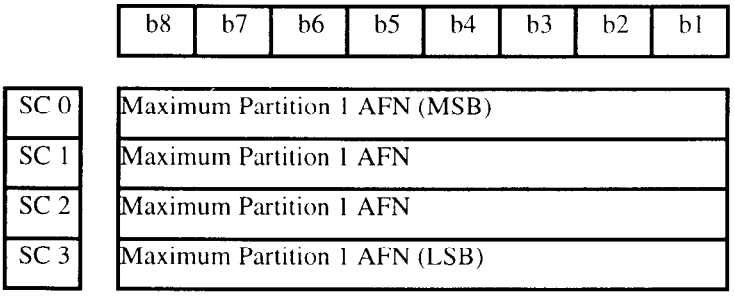

Figure 43 - Pack Item Number 6

Copyright International Organization for Standardization
Provided by IHS under license with ISO
No reproduction or networking permitted without license from IHS
Not for Resale

11.4.7.1 SC 0,1,2,3

11.4.7.1.1 Area ID set to 0010

These bytes shall specify in binary notation the highest Absolute Frame Number within partition 1 of a partitioned tape (see 17.1.2.1).

11.4.7.1.2 Area ID set to 1010

These bytes shall be set to all ONEs.

11.4.7.1.3 Area ID set to any other bit combination

These bytes shall be set to all ZEROs.

11.4.8 Pack Item Number 7

	b8	b7	b6	b5	b4	b3	b2	b1
SC 0	Set to all ZEROs							
SC 1	Set to all ZEROs							
SC 2	Set to all ZEROs							
SC 3	Set to all ZEROs							

Figure 44 - Pack Item Number 7

11.4.8.1 SC 0,1,2,3

These bytes shall be set to all ZEROs.

11.4.9 Pack Item Number 8

	b8	b7	b6	b5	b4	b3	b2	b1
SC 0	Recorded Data Groups (MSB)							
SC 1	Recorded Data Groups							
SC 2	Recorded Data Groups							
SC 3	Recorded Data Groups (LSB)							

Figure 45 - Pack Item Number 8

11.4.9.1 SC 0,1,2,3

These bytes shall specify in binary notation the number of Recorded Data Groups recorded on the tape between the penultimate and the last update of the log.

Copyright International Organization for Standardization
Provided by IHS under license with ISO
No reproduction or networking permitted without license from IHS Not for Resale

11.4.10 Pack Item Number 9

b8	b7	b6	b5	b4	b3	b2	b1

SC 0	Total Recorded Data Groups (MSB)
SC 1	Total Recorded Data Groups
SC 2	Total Recorded Data Groups
SC 3	Total Recorded Data Groups (LSB)

Figure 46 - Pack Item Number 9

11.4.10.1 SC 0,1,2,3

These bytes shall specify in binary notation the number of Recorded Data Groups recorded following the last initialization of the tape (see 16.9 and 17.5) and prior to the last update of the log.

11.4.11 Pack Item Number 10

b8	b7	b6	b5	b4	b3	b2	b1

SC 0	Recorded Data Groups Read (MSB)
SC 1	Recorded Data Groups Read
SC 2	Recorded Data Groups Read
SC 3	Recorded Data Groups Read (LSB)

Figure 47 - Pack Item Number 10

11.4.11.1 SC 0,1,2,3

These bytes shall specify in binary notation the number of Recorded Data Groups read successfully by a drive between the penultimate and the last update of the log.

11.4.12 Pack Item Number 11

b8	b7	b6	b5	b4	b3	b2	b1

SC 0	Total Recorded Data Groups Read (MSB)
SC 1	Total Recorded Data Groups Read
SC 2	Total Recorded Data Groups Read
SC 3	Total Recorded Data Groups Read (LSB)

Figure 48 - Pack Item Number 11

Copyright International Organization for Standardization
Provided by IHS under license with ISO
No reproduction or networking permitted without license from IHS Not for Resale

11.4.12.1 SC 0,1,2,3

These bytes shall specify in binary notation the number of Recorded Data Groups read successfully following the last initialization of the tape (see 16.9 and 17.5) and prior to the last update of the log.

11.4.13 Pack Item Number 12

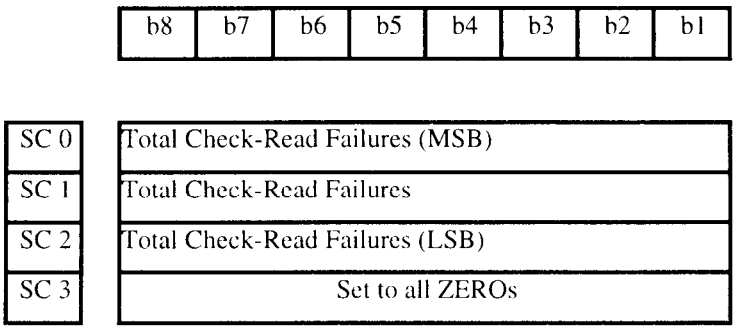

	b8	b7	b6	b5	b4	b3	b2	b1
SC 0	Total Check-Read Failures (MSB)							
SC 1	Total Check-Read Failures							
SC 2	Total Check-Read Failures (LSB)							
SC 3	Set to all ZEROs							

Figure 49 - Pack Item Number 12

11.4.13.1 SC 0,1,2,3

These bytes shall specify in binary notation the number of frames that have failed a Read-After-Write check (see annex L) following the last initialization of the tape (see 16.9 and 17.5) and prior to the last update of the log.

This number does not include the frames which are written between the original frame and its next rewritten occurrence.

11.4.13.2 SC 3

This byte shall be set to all ZEROs.

11.4.14 Pack Item Number 13

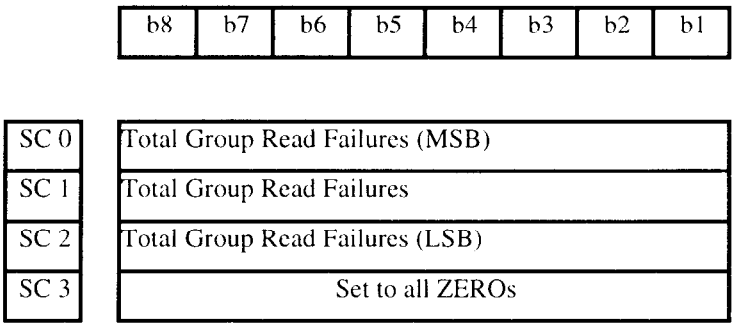

	b8	b7	b6	b5	b4	b3	b2	b1
SC 0	Total Group Read Failures (MSB)							
SC 1	Total Group Read Failures							
SC 2	Total Group Read Failures (LSB)							
SC 3	Set to all ZEROs							

Figure 50 - Pack Item Number 13

11.4.14.1 SC 0,1,2

These bytes shall specify in binary notation the number of times it has not been possible to read successfully all data in a Recorded Data Group with the use of C1 and C2 only, following the last initialization of the tape (see 16.9 and 17.5) and prior to the last update of the log. This number includes all unsuccessful attempts.

11.4.14.2 SC 3

This byte shall be set to all ZEROs.

Copyright International Organization for Standardization
Provided by IHS under license with ISO
No reproduction or networking permitted without license from IHS Not for Resale

11.4.15 Pack Item Number 14

b8	b7	b6	b5	b4	b3	b2	b1

SC 0	Previous Check-Read Failures (MSB)
SC 1	Previous Check-Read Failures (LSB)
SC 2	Group Read Failures Read (MSB)
SC 3	Group Read Failures Read (LSB)

Figure 51 - Pack Item Number 14

11.4.15.1 SC 0,1

These bytes shall specify in binary notation the total number of frames that have failed a Read-After-Write check (see annex L) between the penultimate and the last update of the log.

This number does not include the frames which are written between the original frame and its next rewritten occurence.

11.4.15.2 SC 2,3

These bytes shall specify in binary notation the number of times it has not been possible to read successfully all the data in a Recorded Data Group with the use of C1 and C2 alone, between the penultimate and the last update of the log. This number includes all unsuccessful attempts.

11.4.16 Pack Item Number 15

b8	b7	b6	b5	b4	b3	b2	b1

SC 0	Load Count (MSB)
SC 1	Load Count (LSB)
SC 2	Set to all ZEROs
SC 3	Set to all ZEROs

Figure 52 - Pack Item Number 15

11.4.16.1 SC 0,1

These bytes shall specify in binary notation the number of times the tape has been loaded following the last initialization of the tape (see 16.9 and 17.5) and prior to the last update of the log. One load consists of pulling the tape from its case, wrapping the tape around the drum, positioning the tape ready for use, unwrapping the tape and returning it into the case.

11.4.16.2 SC 2,3

These bytes shall be set to all ZEROs.

11.5 Sub code location

Sub code information is written within each Main Data Fragment Header. The presence or absence of some sub code Pack Items depends on the position of the frame in the overall tape layout. The location of sub code Pack Items depends on the Fragment Number (see 11.3.5.1.1). In addition, in the System Log area of a partitioned tape (see 17), the values specified by some Pack Items depend upon the value of the Absolute Frame Number (AFN).

11.5.1 Sub code Pack Items on a Single Data Space tape

Table 3 : Pack Items on a Single Data Space tape

Copyright International Organization for Standardization
Provided by IHS under license with ISO
No reproduction or networking permitted without license from IHS Not for Resale

Tape Area	Pack Items
System Log (see 16.4.2)	All Pack Items (0 to 15). The number of the Pack Item in each Fragment Header is given by Fragment Number mod 16.
Other Areas	Pack Items 0 to 7. The number of the Pack Item in each Fragment Header is given by Fragment Number mod 8.

11.5.2 Sub code Pack Items on a partitioned tape

Table 4 : Pack Items on a partitioned tape

Tape Area	AFN	Pack Items
System Log in Partition 1 (see 16.4.2 and 17.1.2.2)	Odd	All Pack Items (0 to 15). The number of the Pack Item in each Fragment Header is given by Fragment Number mod 16. Pack Items Nos. 8 to 15 specify values which are the sums of the corresponding log values for each partition.
	Even	All Pack Items (0 to 15). The number of the Pack Item in each Fragment Header is given by Fragment Number mod 16. Pack Items Nos. 8 to 15 specify values which pertain to Partition 0 only.
Other Areas	All	Pack Items 0 to 7. The number of the Pack Item in each Fragment Header is given by Fragment Number mod 8.

12 Method of recording

The method of recording shall be :

- a ONE is represented by a flux transition at the beginning of a bit cell;
- a ZERO is represented by no flux transition in the bit cell.

12.1 Physical recording density

The nominal maximum physical recording density is 5 999,7 ftpmm. The resulting nominal bit cell length is 0,166 6 µm. These values are derived from the track length (see 13.7) divided by the number of bits per track.

12.2 Long-term average bit cell length

The long-term average bit cell length for each track shall be measured over 96 recorded Main Data Fragments (see 14.1). It shall be within 0,2 % of the nominal bit cell length.

12.3 Short-term average bit cell length

The short-term average bit cell length, referred to a particular bit cell, shall be the average of the preceding 40 bit cells. It shall be within 0,35 % of the long-term average bit cell length for the preceding track of the same azimuth.

12.4 Rate of change

The above defined short-term average bit cell length shall not change at a rate greater than 0,05 % per bit cell.

12.5 Bit shift

When measured according to annex F, $(|A_{1110}| + |A_{0111}|) / (A_{0100} + A_{0010})$ shall be less than 0,05.

12.6 Read signal amplitude

The Average Signal Amplitude of an interchanged cartridge shall be

- at 1 499,9 ftpmm, 1 999,9 ftpmm, 2 999,9 ftpmm and 4 499,8 ftpmm : between 80 % and 119 % of the respective nominal recorded levels (see annex D).

12.7 Maximum recorded levels

Recorded signals shall be erasable by overwriting. The limits imposed on the recorded levels for this reason are specified in annex D.

Copyright International Organization for Standardization
Provided by IHS under license with ISO
No reproduction or networking permitted without license from IHS Not for Resale

13 Track geometry

13.1 Track configuration

The helical track pattern is formed by the relationship between the direction of tape motion and the axis of rotation of a pair of heads, one of which has a positive azimuth angle and the other a negative azimuth angle. The direction of recording is away from the Tape Reference Edge. The track configuration is shown in figure 53.

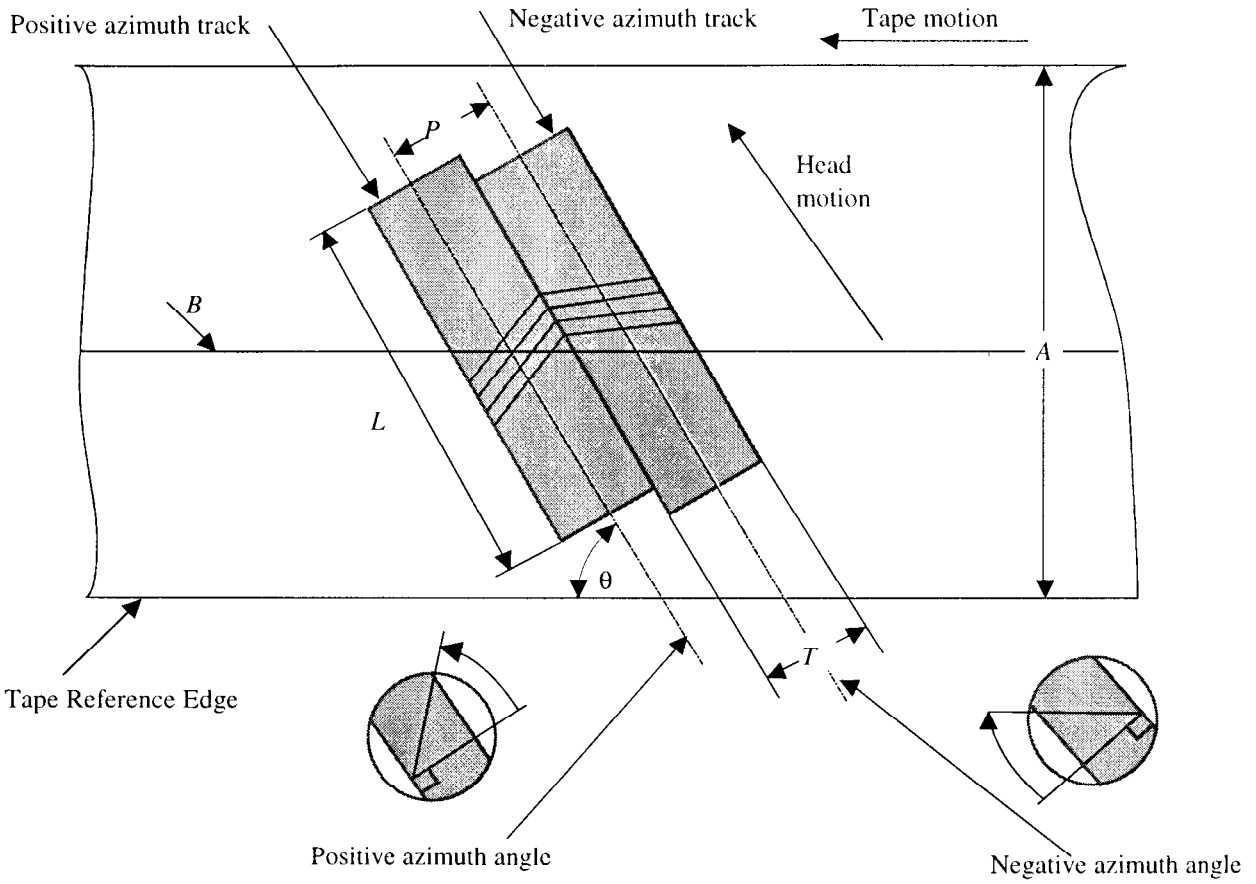

A : Tape width
B : Ideal tape centreline
θ : Track angle
L : Track length
P : Track pitch
T : Track width

Figure 53 - Track configuration (view on recording surface)

13.2 Average track pitch

The average track pitch, taken over any group of 30 consecutive tracks, shall be 9,053 µm ± 0,045 µm. The track pitch at a non-seamless append point (see 16.5.5.2) shall not be included in this average.

13.3 Variations of the track pitch

The change of track pitch between successive track pitches shall not exceed 2,0%, excluding the effect of an appending operation (see 16.5.5).

13.4 Track width

The nominal track width shall be 9,053 µm.

The measured track width shall be 9,1 µm ± 1,8 µm.

Copyright International Organization for Standardization
Provided by IHS under license with ISO
No reproduction or networking permitted without license from IHS
Not for Resale

This requirement shall not apply at a non-seamless append point.

13.5 Track angle

The nominal angle of each track with respect to the Tape Reference Edge shall be 6° 22' 39,6".

13.6 Track edge linearity

The leading edge of each track shall fall within the box defined in annex G.

13.7 Track length

The length of each track shall be 23,521 mm ± 0,047 mm.

13.8 Ideal tape centreline

The ideal centreline of the tape is 1,900 mm from the Tape Reference Edge.

13.9 Azimuth angles

The positive azimuth angle shall be 20° 00' 39,6" ± 15' 00,0".

The negative azimuth angle shall be 19° 59' 20,4" ± 15' 00,0".

14 Recorded patterns

Each 8-bit byte of the Main Data Fragments shall be represented on the tape by a 10-bit pattern. Annex E specifies for each 8-bit byte the 10-bit pattern to be recorded. The bits of the 10-bit pattern are called Channel bits.

14.1 Recorded Main Data Fragment

A Recorded Main Data Fragment shall consist of 1 330 Channel bits representing the 132 8-bit bytes of a Main Data Fragment preceded by a Sync field of 10 Channel bits with one of the following patterns:

a) 0100010001

b) 1100010001

Pattern a) shall be used for Q' = -1, DC = 0, Q = 1; pattern b) for Q' = 1, DC = 0, Q = 1 (see annex E). Either pattern may be used when there is no preceding pattern, and hence no value of Q'. See E.1 for the order of recording.

In a track of positive azimuth, the Recorded Main Data Fragments shall represent the Main Data Fragments formed from the PLUS array of a G4 Sub-Group (see 11.3.4). In the track of negative azimuth of the same Frame, the Recorded Main Data Fragments shall represent the Main Data Fragments formed from the MINUS array of the same G4 Sub-Group. Within each track, the Recorded Main Data Fragments shall be recorded in the sequence of their Fragment Numbers.

14.2 Preamble Zone, Margin Zones

These zones shall be recorded with the repeating Channel bit pattern 1010101010. See E.1 for the order of recording. There shall be no discontinuity of this pattern between Margin Zone No. 1 and the Preamble Zone.

15 Format of a track

15.1 Format of a track

Each track shall consist of two Margin Zones, a Preamble Zone and a Main Data Zone. In Table 5 the direction of recording is down the page.

Table 5 - Track format

Zone	Contents	Number of 10-bit patterns
Margin Zone No. 1	Margin pattern	640
Preamble Zone	Preamble pattern	64
Main Data Zone	Recorded Main Data Fragments	12 768
Margin Zone No. 2	Margin pattern	640

Copyright International Organization for Standardization
Provided by IHS under license with ISO
No reproduction or networking permitted without license from IHS Not for Resale

15.2 Positioning accuracy

The position reference point of a track is the position, measured in the direction perpendicular to the Tape Reference Edge, of the first bit cell of Fragment Number 48, along the centreline of the track.

The position reference points of all tracks, shall be 1,906 mm ± 0,027 mm from the Tape Reference Edge.

The position reference point of :

- all tracks within the continuum formed by a Recorded Data Group (see 16.5.2) and, at an append point (see 16.5.5), the Amble Frames which start at Frame B and precede that Recorded Data Group, and
- all tracks within the continuum formed by the System Preamble, System Log and System Postamble (see 16.4), and
- all tracks within the continuum formed by the Vendor Group Preamble and the Vendor Group (see 16.5.1)

shall be within 4,5 µm of the mean of the position reference points of all tracks in the continuum. In addition, the mean of the position reference points of any 12 consecutive tracks within the continuum shall be within 1,0 µm of the mean of position reference points of all tracks within the continuum.

15.3 Tracking scheme

This format does not include any aids specifically designed to assist a reading drive in maintaining tracking. However, the specifications of 15.2 limit the extent of the conditions that it must handle correctly.

16 Layout of a Single Data Space tape

A magnetic tape shall be recorded as a Single Data Space tape or as a Partitioned tape. The layout of a Single Data Space tape is specified in this clause, that of a Partitioned tape in clause 17.

The layout of the Single Data Space tape consists of six areas:

- the Device Area
- the Reference Area
- the System Area
- the Data Area
- the EOD Area
- the Post-EOD Area

Copyright International Organization for Standardization
Provided by IHS under license with ISO
No reproduction or networking permitted without license from IHS Not for Resale

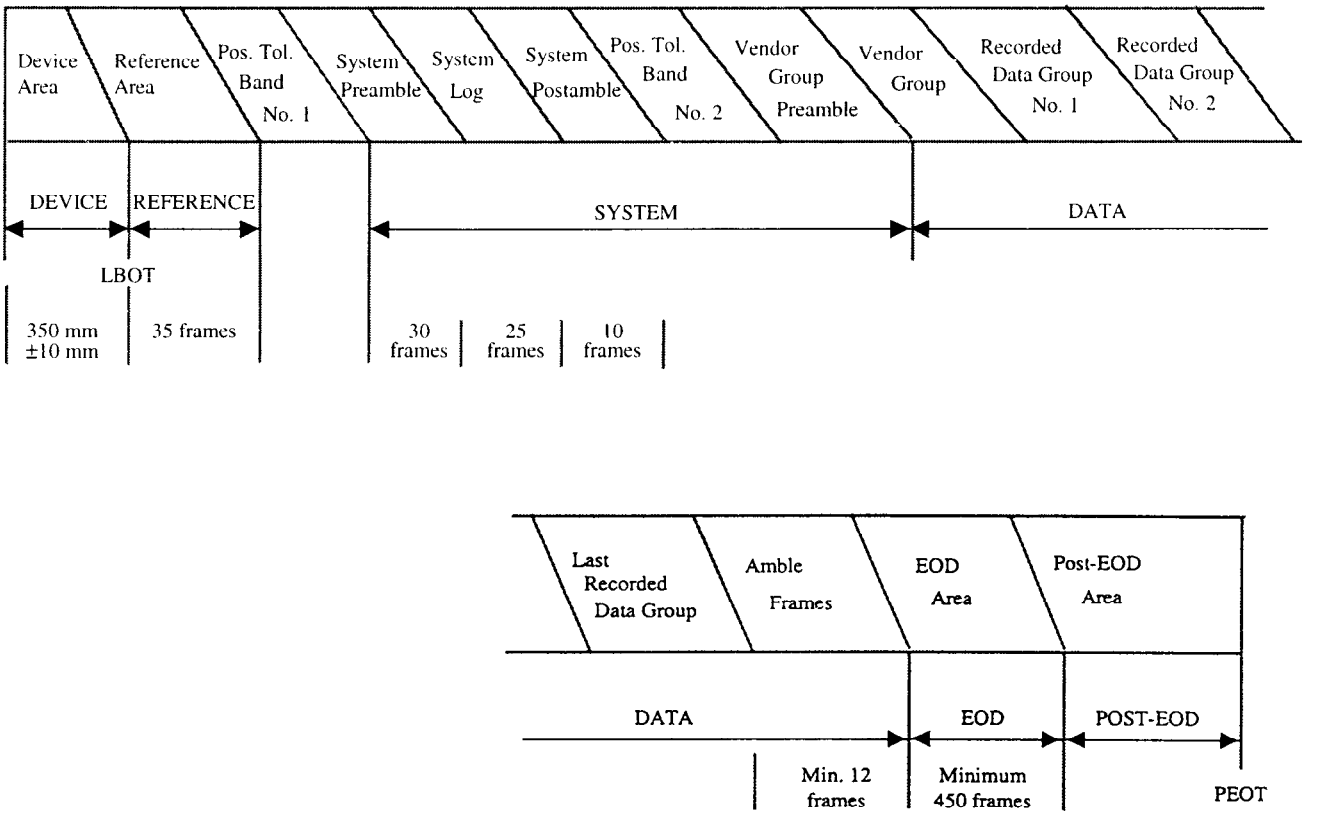

Figure 54 - Layout of a Single Data Space tape

16.1 Device Area

This area shall be the first area on the magnetic tape and shall extend from PBOT to LBOT. It shall not be used for writing data for interchange. Its length, measured parallel to the Tape Reference Edge, from PBOT to the first bit of the first block of the first recorded track of the Reference Area, shall be 350 mm ± 10 mm. It shall consist of three zones : a spin-up zone, a test zone and a guard zone.

The first zone of the Device Area is a spin-up zone. It is the part of the tape which is wrapped around the drum when the tape is loaded into the drive.

The spin-up zone shall be followed by a test zone available for read/write purposes. The contents of these two zones are not specified by this International Standard. However, if a track in these zones complies with the track format of table 5 in 15.1 the Area ID field of all Fragment Headers shall be set to 0000.

The test zone shall be followed by a guard zone of length 9 mm minimum, in which no recording is permitted.

16.2 Reference Area

This area shall consist of 35 Tape Management Frames (see 18.3), of which the first starts at LBOT and has an Absolute Frame Number of 1. The Reference Area is used as the physical reference when updating the System Log.

16.3 Position Tolerance Band No. 1

This band shall have a nominal length equivalent to five Frames, with a minimum length of zero and a maximum length of 10 Frames. It is used to accommodate the positioning tolerances when updating the System Log. Discontinuities and repetitions of the Absolute Frame Number may occur in this band. The recorded signals may be ill-defined in this band.

16.4 System Area

This area shall consist of the System Preamble, System Log, System Postamble, Position Tolerance Band No. 2, and the Vendor Group Preamble.

16.4.1 System Preamble

The System Preamble shall consist of 30 Tape Management Frames (see 18.3), having the Absolute Frame Numbers 41 to 70.

Copyright International Organization for Standardization
Provided by IHS under license with ISO
No reproduction or networking permitted without license from IHS
Not for Resale

16.4.2 System Log

The System Log shall consist of 25 System Log Frames (see 18.2), having the Absolute Frame Numbers 71 to 95.

Note - The history data in the System Log cannot be relied upon to be always accurate, because drives cannot update the log if the Write-inhibit Hole is open. It may also be destroyed during initialization (see 16.9).

16.4.3 System Postamble

The System Postamble shall consist of 10 Tape Management Frames, having the Absolute Frame Numbers 96 to 105.

Note - It is recommended that the continuum comprising the System Preamble, System Log and System Postamble be written in a continuous motion when the System Log is updated.

16.4.4 Position Tolerance Band No. 2

This band shall have a nominal length equivalent to 15 Frames. Its actual length depends on the actual length of the Position Tolerance Band No. 1 and on the actual position of the first Frame of the Vendor Group Preamble, and hence may vary from 0 to 30 Frames. Discontinuities and repetitions of the Absolute Frame Number may occur in this band. The recorded signals may be ill-defined in this band.

16.4.5 Vendor Group Preamble

The Vendor Group Preamble shall consist of 30 Tape Management Frames having the Absolute Frame Numbers 121 to 150. The Vendor Group Preamble shall immediately precede the Vendor Group and be contiguous with it.

16.5 Data Area

This area shall consist of the Vendor Group and one or more Recorded Data Groups. A Frame in the Data Area shall be either an Amble Frame (see 18.1) or, within a Recorded Data Group, a recorded representation of a Sub-Group. A Logical Frame Number is allocated to each Frame. The Logical Frame Number of an Amble Frame is zero. The Logical Frame Number of a Frame within a Recorded Data Group is the number of the Sub-Group it represents. It is expressed by bits 1 to 6 of the Logical Frame ID (see 11.3.3.1.3 and 11.4.1).

The last Recorded Data Group shall be followed by at least 12 Amble Frames.

16.5.1 Vendor Group

A Vendor Group is the recorded instance of Basic Group No. 0, the content of which is not specified by this International Standard (see annex M). The Vendor Group is formed from the bytes of that Basic Group by applying the operations described in 11.3 and 11.4 and recording the resulting Frames. The first of these Frames shall have the Absolute Frame Number 151.

In addition none or either or both of two further operations, namely ECC3 (see 16.5.3) and Repeated Frames (see 16.5.4) may be applied.

No unrecorded space or physical discontinuity or seam or Absolute Frame Number discontinuity or Absolute Frame Number repetition may occur within a Vendor Group.

16.5.2 Recorded Data Group

Each Recorded Data Group is a recorded instance of a Basic Group, and is formed from the data sent from a host computer by applying the operations described in clause 11 and recording the resulting Frames, one per G4 Sub-Group, in the sequence of their Logical Frame Numbers (see 11.3.3.1.3).

In addition, none or either or both of two further operations may be applied. These are ECC3 (see 16.5.3) and Repeated Frames (see 16.5.4). No unrecorded space or physical discontinuity or seam or Absolute Frame Number discontinuity or Absolute Frame Number repetition may occur within a Recorded Data Group.

16.5.3 ECC3

The Error Correction Code 3 (ECC3) has the capability of correcting any two tracks which are bad in a Recorded Data Group. The ECC3 data is derived from the 22 G1 Sub-Groups of the Basic Group to form a 23rd G1 Sub-Group.

ECC3 shall be a GF (2^8) Reed-Solomon Code (46, 44, 3). Calculation in a GF (2^8) shall be defined by :

$$G(x) = x^8 + x^4 + x^3 + x^2 + 1$$

A primitive element α in GF (2^8) is 00000010.

The interleave depth of ECC3 shall be one track. The ECC bytes shall satisfy :

$$H_R \times V_R = 0$$

The generator polynomial shall be :

Copyright International Organization for Standardization
Provided by IHS under license with ISO
No reproduction or networking permitted without license from IHS Not for Resale

$$G_R(x) = \prod_{i=0}^{i=1} \left(x - \alpha^i\right)$$

$$H_R = \begin{bmatrix} 1 & 1 & 1 & \dots & 1 & 1 & 1 \\ \alpha^{45} & \alpha^{44} & \alpha^{43} & \dots & \alpha^2 & \alpha & 1 \end{bmatrix}$$

$$V_R = \begin{bmatrix} D_{n,1} \\ D_{n+8734,1} \\ D_{n,2} \\ D_{n+8734,2} \\ \dots \\ D_{n+8734,22} \\ R_{n,23} \\ R_{n+8734,23} \end{bmatrix}$$

$n = 0, 1, 2, ..., 8\,733$

$D_{x,y}$ x = User data byte number in a G1 Sub-Group, y = G1 Sub-Group number

$R_{x,23}$ x = Parity byte number in the ECC3 G1 Sub-Group

The ECC3 G1 Sub-Group shall be transformed according to the procedures of 11.3 and 11.4 to form the recorded Main Data Fragments of the two tracks of the ECC3 Frame.

16.5.4 Repeated Frames

In the Data Area, a Frame within a Recorded Data Group may be repeated by rewriting it further along the tape. The repeated Frame may be written after zero, one, two, three, four, five, six or seven other Frames have been written. Each such sequence (i.e. the original or repeated Frame and the zero, one, two, three, four, five, six or seven following Frames) can be repeated multiple times, e.g. to allow skipping over bad areas on the tape. The maximum number of instances of a sequence shall be 256, i.e. the original and up to 255 repetitions.

Intermediate Frames, i.e. those Frames written between the original Frame and its next occurrence shall start with the Frame the Logical Frame Number of which is the next in the normal sequence, and shall follow the correct sequence thereafter. The correct sequence requires successive Frames to have Logical Frame Numbers which increment by one until the last Frame in the Recorded Data Group, or the ECC3 Frame if present, after which they restart from 0 (for an Amble Frame) or 1 (for the first Frame of the next Recorded Data Group). Amble Frames are allowed in this sequence, provided the limit of seven Intermediate Frames is not exceeded. The final occurrence of the repeated Frame shall be followed by the Intermediate Frames written in the correct sequence.

16.5.5 Appending and overwriting

When new data is appended to data already recorded on tape, or existing data is overwritten by new data, the point at which recording may start shall be referenced to the last Frame (Frame A in figure 55) of a Recorded Data Group. If Repeated Frames have been recorded, the relevant Frame is the last repetition of the last Frame. The smallest unit of appending or overwriting is a Recorded Data Group.

Note - After overwriting commences, all data between the current recording point and PEOT is logically inaccessible.

The rules for appending and overwriting are identical. For simplicity, the following description refers only to appending.

Data may be appended to the tape by either the seamless or non-seamless methods. In a seamless appending operation, the appended tracks shall form a continuous sequence with the previous tracks. No track shall be partially overwritten to the point of being unreadable nor shall any gaps be left between tracks.

Copyright International Organization for Standardization
Provided by IHS under license with ISO
No reproduction or networking permitted without license from IHS Not for Resale

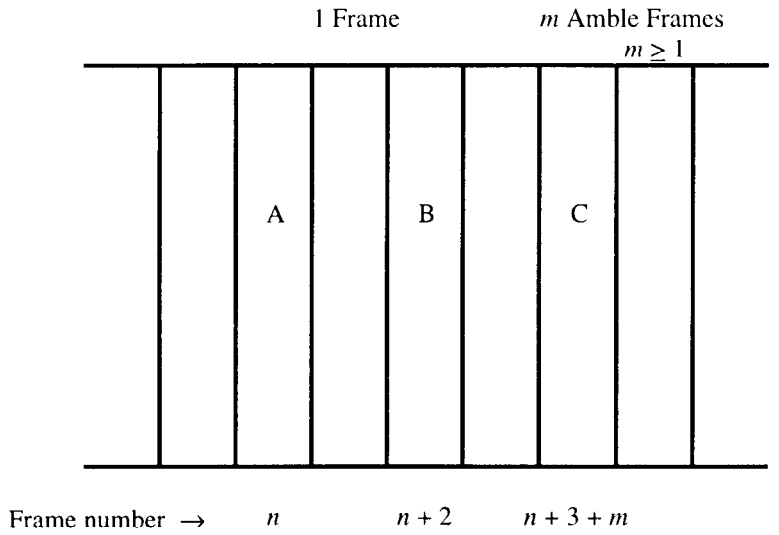

Figure 55 - Appending rules

The Frames up to and including Frame A on figure 55 contain information which is to be retained. The append starts with Amble Frames at Frame B and the information at Frame C.

16.5.5.1 Seamless appending rules

Rule 1. There shall be one Frame between Frame A and Frame B, i.e. if Frame A has an Absolute Frame Number (AFN) of n, then Frame B shall have an AFN of n+2.

Rule 2. The Frame written between Frames A and B shall be contiguous with Frame A, i.e. no unrecorded space between A and B is permitted, nor is any discontinuity or repetition of AFNs, nor is any physical discontinuity. The Group Number of this Frame shall be greater than that of Frame A, unless this Frame is an Amble Frame (see 18.1), in which case its Group Number shall be equal to that of Frame A. The content of this Frame shall be ignored.

Rule 3. There shall be a minimum of one Amble Frame between Frames B and C, i.e. if Frame B has an AFN of n+2, then Frame C shall have an AFN of n+4 minimum. No unrecorded space, physical discontinuity, or AFN discontinuity or repetition is allowed between Frames B and C.

Rule 4. The position of the first track of Frame B (AFN = n+2), as measured along the length of the tape at the point shown in figure 56, shall be at a distance of x = 163,0 µm ± 26,7 µm from the first track of the Frame with AFN = n+1.

Copyright International Organization for Standardization
Provided by IHS under license with ISO
No reproduction or networking permitted without license from IHS
Not for Resale

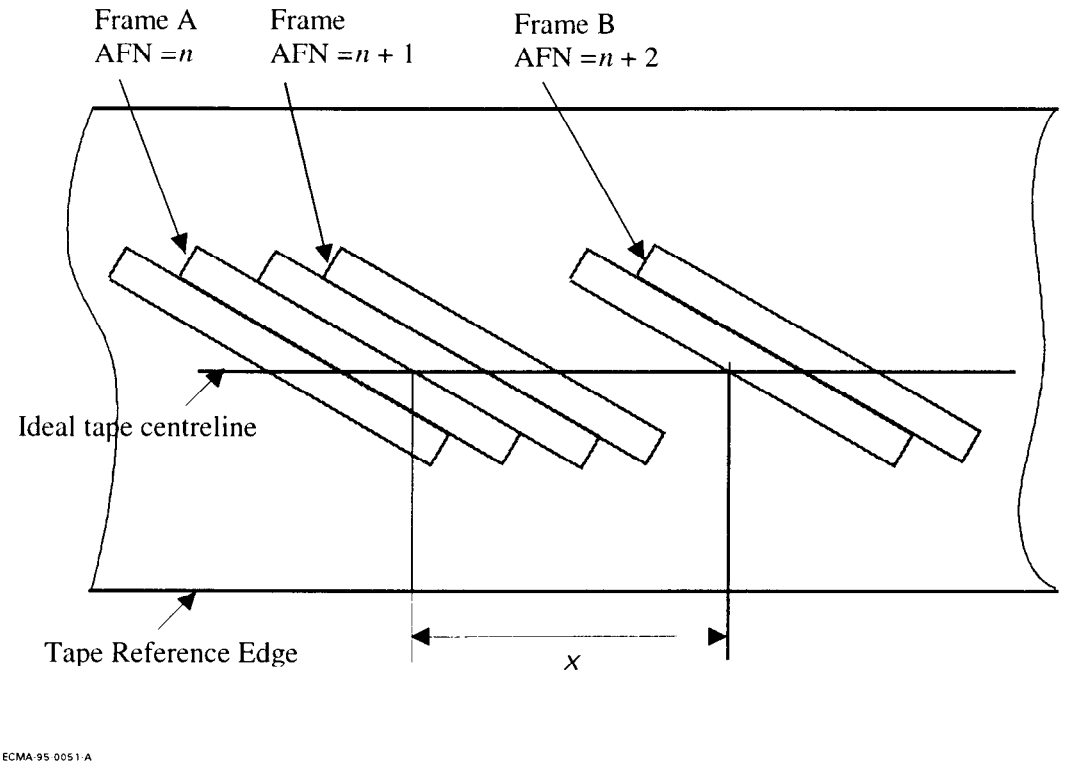

Figure 56 - Tolerance on seamless appending

16.5.5.2 Non-seamless appending rules

Rule 1. The distance between Frame A and Frame B shall be sufficient for a minimum of one and a maximum of 11 Frames. No unrecorded space is permitted between Frame A and Frame B. One or more Frames between Frame A and Frame B may be ill-defined, e.g., as a result of partial overwriting at an append point.

Rule 2. Discontinuities and repetitions of AFN are permitted between Frame A and Frame B, provided that, where Frame A has an AFN of n,

- all Frames have an AFN greater than n, and
- Frame B has an AFN of n+2 minimum and n+12 maximum.

Rule 3. Amble Frames (see 18.1) between Frame A and Frame B shall have a value of Group Number which is equal to that of Frame A. Other Frames between Frame A and Frame B shall have a value of Group Number which is greater than that of Frame A.

Rule 4. There shall be a minimum of 29 Frames between Frames B and C, i.e. if Frame B has an AFN of $n+2 \leq n' \leq n+12$, then Frame C shall have an AFN of $n'+30$ minimum. No unrecorded space, physical discontinuity or seam or AFN discontinuity or repetition is allowed between Frames B and C.

16.6 EOD Area

The Data Area shall be followed by an EOD Area.

It shall consist of a minimum of 450 Tape Management Frames (see 18.3), and shall start after the last Amble Frame in the sequence of Amble Frames which follows the last Recorded Data Group. The first Frame of the EOD Area shall be recorded at least 2 500 mm before PEOT.

More than one EOD Area may exist on a tape. The EOD Area closest to LBOT shall be the only valid one for information interchange.

16.7 Post-EOD Area

The EOD Area shall be followed by a Post-EOD Area which extends to PEOT. The contents of this Post-EOD Area are not defined for interchange.

Copyright International Organization for Standardization
Provided by IHS under license with ISO
No reproduction or networking permitted without license from IHS
Not for Resale

16.8 Early Warning Point - (EWP)

For a new or bulk-erased tape the position of the EWP is calculated by the drive writing the tape. The calculation shall ensure that the EWP is not less than 3 000 mm before PEOT. Until data is recorded beyond the calculated EWP no indication of its position is recorded on the tape. When data is first recorded beyond the calculated EWP, the setting of the AEWP bit (see 11.2.3.1.14) changes from ZERO to ONE in the last Basic Group which is completely or partially recorded before that point. This changeover then denotes the position of the EWP when the tape is subsequently read.

For a tape containing data which is being overwritten, if the point at which overwriting commenced is before the EWP as defined prior to the commencement of overwriting, a new position of the EWP is calculated by the drive currently writing the tape. The calculation shall ensure that the EWP is not less than 3 000 mm before PEOT. When data is recorded beyond this calculated EWP, the setting of the AEWP bit (see 11.2.3.1.14) changes from ZERO to ONE in the last Basic Group which is completely or partially recorded before that point. This changeover then denotes the position of the EWP when the tape is subsequently read.

For a tape containing data which is being overwritten, if the AEWP bit changes from ZERO to ONE prior to the point at which overwriting commenced, the position of the EWP is denoted by that changeover, i.e. the AEWP bit is set to ONE in all overwriting groups.

16.9 Initialization

Initialization is a procedure which shall be carried out before the first use of a tape cartridge for recording user data (it may be also used at other times). The procedure ensures that there shall be no unrecorded space between LBOT and the end of the Vendor Group. The extent from LBOT to the end of the Vendor Group shall be recorded as a continuum in which the Position Tolerance Bands No. 1 and No. 2 shall be recorded as Tape Management Frames (see 18.3) and shall have their nominal numbers of 5 and 15 Frames, respectively. The Frames in the Position Tolerance Band No. 1 shall have their Area ID fields set to the Reference Area ID (see 11.3.5.1.2).

If an initialization pass is performed on a recorded tape, it will destroy all data thereon, including the history data in the System Log(s).

Note - The tape layout is such that a separate initialization pass on a new or bulk-erased tape is not necessary prior to the recording of the first Recorded Data Group. The Reference Area, System Area and Vendor Group can be recorded at a time immediately prior to the recording of the first Recorded Data Group.

17 Layout of a partitioned tape

A partitioned tape provides on one magnetic tape two independent partitions, each of which has a structure and properties similar to those of the recorded parts of a Single Data Space tape.

With the exception of the differences described hereafter, all of the foregoing descriptions of the recorded format shall apply to each partition of a partitioned tape.

Copyright International Organization for Standardization
Provided by IHS under license with ISO
No reproduction or networking permitted without license from IHS
Not for Resale

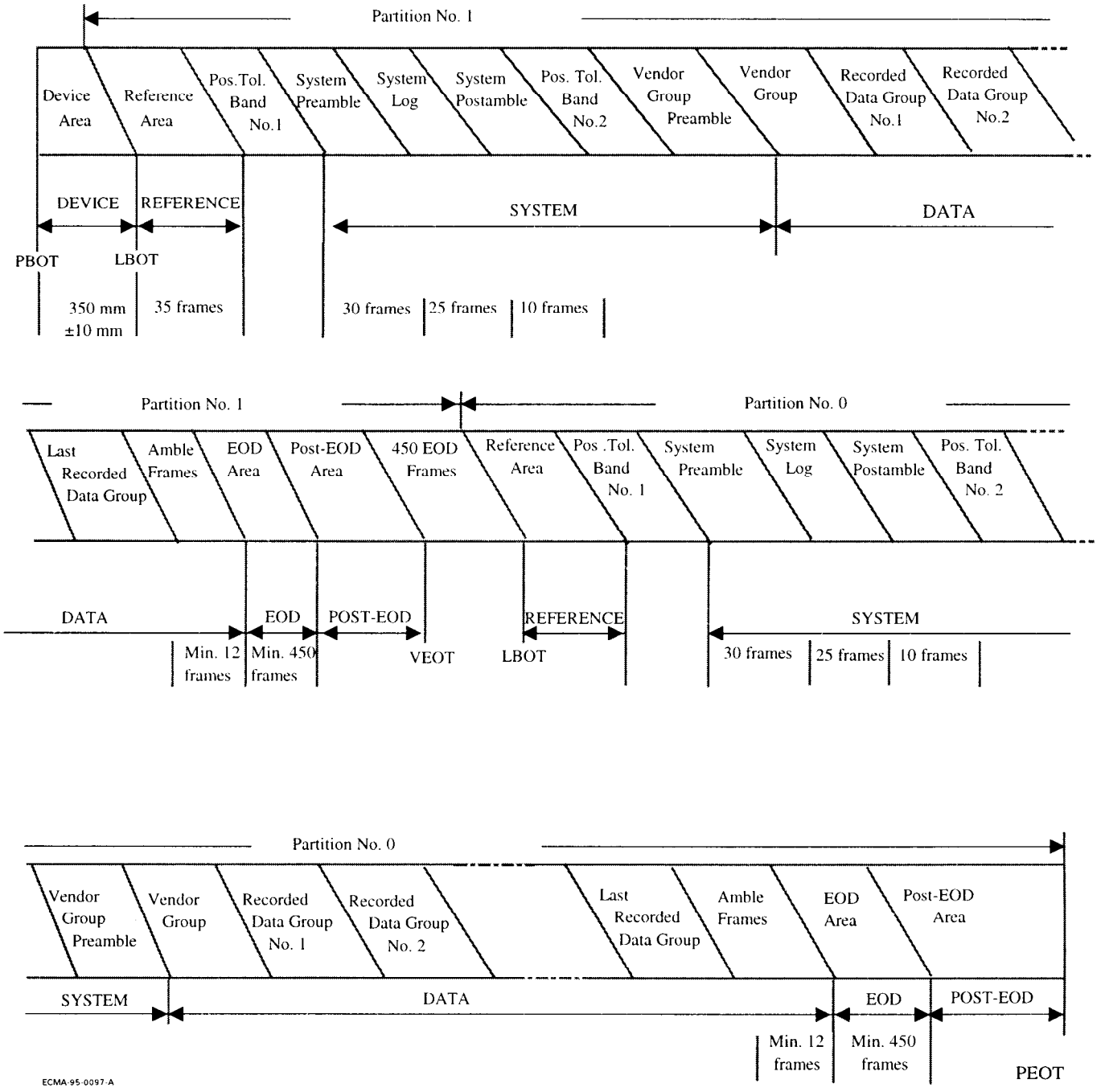

Figure 57 - Layout of a partitioned tape

17.1 Overall magnetic tape layout

The layout of a partitioned tape shall consist of the Device Area, partition 1 and partition 0, which shall be located in that order from PBOT to PEOT.

17.1.1 Device Area

This area shall be identical with that of a Single Data Space tape.

17.1.2 Partition 1

17.1.2.1 Size of Partition 1

The total number of Frames in partition 1 shall be recorded in Pack Item No. 6 in the frames of the System Log of partition 1. See 11.4.7.

Copyright International Organization for Standardization
Provided by IHS under license with ISO
No reproduction or networking permitted without license from IHS
Not for Resale

17.1.2.2 System Log

The contents of Pack Items Nos. 8 to 15 in each frame of the System Log shall depend on whether the Absolute Frame Number is odd or even. See 11.5.2.

17.1.2.3 Virtual End Of Tape (VEOT)

The VEOT shall be a reference point at a distance equivalent to 450 Frames before the Partition Boundary. This reference point is intended for use in a manner identical with that of PEOT on a Single Data Space tape, i.e. no recording shall occur within partition 1 beyond VEOT, except during initialization (see 17.5).

The space between VEOT and the Partition Boundary shall contain Tape Management Frames which are identical with those of the EOD Area of partition 1.

Note - After overwriting commences (see 16.5.5) in partition 1, all data between the current recording point and VEOT is logically inaccessible. Data in partition 0 is unaffected.

17.1.2.4 Partition 1 Early Warning Point - (EWP)

Within an empty partition 1 (see 17.4) the position of the EWP is calculated by the drive writing the tape. The calculation shall ensure that the EWP is not less than 3 067 Frames before VEOT. Until data is recorded beyond the calculated EWP no indication of its position is recorded on the tape. When data is first recorded beyond the calculated EWP, the setting of the AEWP bit (see 11.2.3.1.14) changes from ZERO to ONE in the last Basic Group which is completely or partially recorded before that point. This changeover then denotes the position of the EWP when the tape is subsequently read.

For a partition 1 containing data which is being overwritten, if the point at which overwriting commenced is before the EWP as defined prior to the commencement of overwriting, a new position of the EWP is calculated by the drive currently writing the tape. The calculation shall ensure that the EWP is not less than 3 067 Frames before VEOT. When data is recorded beyond this calculated EWP, the setting of the AEWP bit (see 11.2.3.1.14) changes from ZERO to ONE in the last Basic Group which is completely or partially recorded before that point. This changeover then denotes the position of the EWP when the tape is subsequently read.

For a partition 1 containing data which is being overwritten, if the AEWP bit changes from ZERO to ONE prior to the point at which overwriting commenced, the position of the EWP is denoted by that changeover, i.e. the AEWP bit is set to ONE in all overwriting groups in partition 1.

Note - The length of tape occupied by 3 067 frames is approximately 500 mm.

17.1.2.5 Partition 1 EOD Area

The Data Area shall be followed by an EOD Area.

It shall consist of Tape Management Frames, and shall start after the last Amble Frame in the sequence of Amble Frames which follows the last Recorded Data Group. If the length of tape between the last Amble Frame and VEOT is greater than, or equal to, 450 Frames, the EOD Area shall consist of at least 450 Frames. If the length of tape between the last Amble Frame and VEOT is less than 450 Frames, the length of the EOD Area shall be equal to that length.

17.1.2.6 Partition 1 Post-EOD Area

If the end of the EOD Area occurs before VEOT, it shall be followed by a Post-EOD Area which extends to VEOT. This Post-EOD Area shall consist of recorded Frames in which the Area ID (see 11.3.5.1.2) indicates partition 1, but the contents of which are not otherwise specified for interchange.

17.1.3 Partition 0

17.1.3.1 LBOT

The LBOT is the Partition Boundary. The first Frame after this point shall have the Absolute Frame Number of one.

17.1.3.2 System Log

Pack Item Nos. 8 to 15 shall not be recorded in the frames of the System Log. See 11.5.2.

17.2 Area ID

The most significant bit of the Area ID (see 11.3.5.1.2) shall be set to ONE for partition 0 and to ZERO for Partition 1.

17.3 System Area Pack Items No. 3 and No. 4

In the System Area of partition 0, the bytes of Pack Item No. 6 shall be set to all ONEs.

17.4 Empty partitions

On a partitioned tape, of which only one partition contains Recorded Data Groups, the other partition shall be regarded as empty.

Copyright International Organization for Standardization
Provided by IHS under license with ISO
No reproduction or networking permitted without license from IHS Not for Resale

17.4.1 Empty partition 1

An empty partition 1 shall contain

- a Reference Area
- a System Area
- a Data Area, comprising a Vendor Group and at least 35 Amble Frames
- a minimum of 3 517 Tape Management Frames identical with those of the EOD Area of partition 1.

The Vendor Group Preamble, the Data Area and the following Tape Management Frames shall form a continuum which extends to the Partition Boundary and in which no unrecorded space, physical discontinuity or seam or Absolute Frame Number discontinuity or Absolute Frame Number repetition is permitted.

17.4.2 Empty partition 0

An empty partition 0 shall contain

- a Reference Area
- a System Area
- a Data Area, comprising a Vendor Group and at least 35 Amble Frames
- an EOD Area of length 450 Frames minimum.

The first Frame of the EOD Area shall be recorded at least 2 500 mm before PEOT.

The Vendor Group Preamble, the Data Area and the EOD Area shall form a continuum in which no unrecorded space, physical discontinuity or seam or Absolute Frame Number discontinuity or Absolute Frame Number repetition is permitted.

17.5 Initialization of partitioned tapes

When a new or bulk-erased tape is to be used as a partitioned tape, the recording of Recorded Data Groups starts in one partition, the other is empty. In order to define the position of the Partition Boundary, to ensure that the empty partition conforms to the requirements of 17.4, and to assist in efficient management of the tape position, it is convenient to perform an initialization pass prior to the first recording. Such initialization should write, as a continuum, empty partitions 1 and 0 as defined above.

If an initialization pass is performed on a recorded tape, it may destroy all data thereon, including history data in the System Log(s).

18 Housekeeping Frames

Housekeeping Frames do not contain any user data. The Main Data Fragments of each track shall be generated by forming a G1 Sub-Group, with a running number of 0 and in which each byte is set to all ZEROs, and then applying the procedure of 11.3 thereto. The Sub code information shall be as defined in 11.4.

There are three types of Housekeeping Frames, namely Amble Frames, System Log Frames and Tape Management Frames.

18.1 Amble Frames

Amble Frames are permitted only in the Data Area. Their Logical Frame Number shall be zero. The Sub code information in Pack Items No. 0, No. 1, No. 2 and No. 3 shall refer to the Basic Group which is represented by the preceding Recorded Data Group.

Amble Frames are not permitted within a Recorded Data Group, except within a run of Intermediate Frames (see 16.5.4), and are not permitted before the Vendor Group.

An Amble Frame shall be preceded only by another Amble Frame or the last Frame of a Recorded Data Group, except at an append point (see 16.5.5.1 and 16.5.5.2).

18.2 System Log Frames

System Log Frames shall be recorded within the System Area and with Absolute Frame Numbers in the range 71 to 95. All bytes of Pack Items No. 0, No. 1 and No. 3 shall be set to all ZEROs. Bytes SC0, SC1 and SC2 of Pack Item No. 2 shall be set to all ZEROs. Byte SC3 of Pack Item No. 2 shall be set as defined in 11.4.3.2.

18.3 Tape Management Frames

Tape Management Frames shall be recorded only in

- the Reference Area;

Copyright International Organization for Standardization
Provided by IHS under license with ISO
No reproduction or networking permitted without license from IHS Not for Resale

- the System area, except in the System Log;
- the EOD Area;
- between VEOT and the Partition Boundary.

All bytes of Pack Items No. 0, No. 1 and No. 3 shall be set to all ZEROs. Bytes SC0, SC1 and SC2 of Pack Item No. 2 shall be set to all ZEROs. Byte SC3 of Pack Item No. 2 shall be set as defined in 11.4.3.2.

Copyright International Organization for Standardization
Provided by IHS under license with ISO
No reproduction or networking permitted without license from IHS
Not for Resale

Annex A

(normative)

Measurement of the light transmittance of the prisms

A.1 The following description outlines the measuring equipment and measuring method to be used for measuring the light transmittance of the prisms.

Transmittance is the ratio between the reading obtained from the measuring equipment with the cartridge in position and the reading obtained with a reference prism in position.

Transmittance of the cartridge prism:

$$\frac{P_c \text{ (Cartridge prism)}}{P_r \text{ (Reference prism)}} \times 100\ \%$$

A.2 Radiation source

An infra-red light-emitting diode (LED) with the following parameters shall be used:

wavelength at peak emission: 850 nm ± 50 nm

half-power bandwidth: ± 50 nm

A.3 Radiation receiver

A silicon photo diode shall be used. It shall be operated in the short-circuit mode.

A.4 Optical assembly

The optical assembly for testing the cartridge prisms shall be as shown in figure A.2. All surfaces shall be matt black. Both optical systems shall be calibrated using the reference prism mounted as in figure A.1.

All measurements shall be made in a dark room.

A.5 Reference prism

transmittance: 95 % for a wavelength of 850 nm ± 50 nm

dimensions: see figure A.3

A.6 Measuring circuitry

As described in B.2.6; switch S to be in position 0.

Copyright International Organization for Standardization
Provided by IHS under license with ISO
No reproduction or networking permitted without license from IHS
Not for Resale

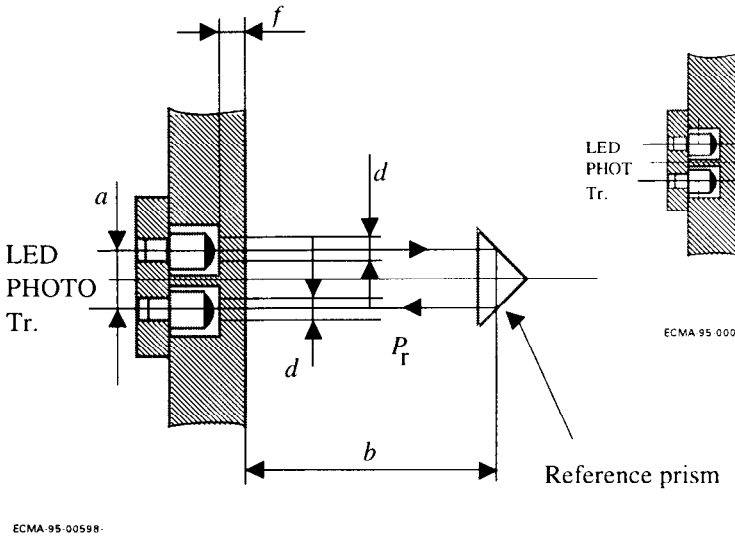

Figure A.1 - Reference prism

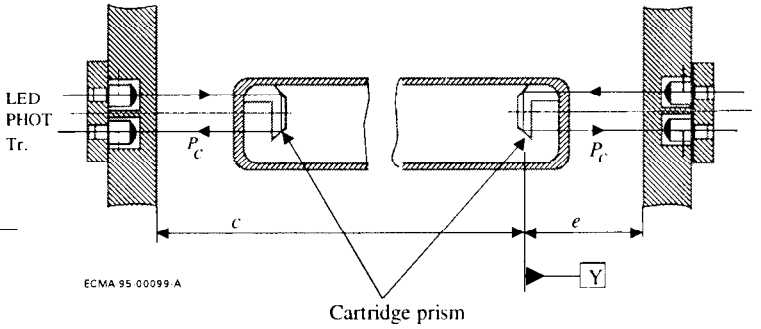

Figure A.2 - Cartridge prism

a = 3,75 mm d = 1,00 mm
b = 13,00 mm e = 13,20 mm
c = 64,20 mm f = 1,00 mm

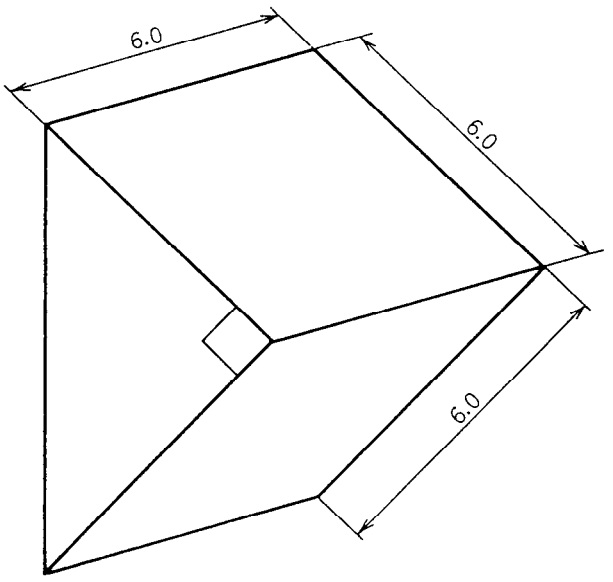

Figure A.3 - Perspective view of the reference prism

Copyright International Organization for Standardization
Provided by IHS under license with ISO
No reproduction or networking permitted without license from IHS
Not for Resale

Annex B

(normative)

Measurement of light transmittance of tape and leaders

B.1 Introduction

The following description outlines the general principle of the measuring equipment and measuring method to be applied when measuring the light transmittance of tape.

For the purpose of this International Standard "light transmittance" is defined by convention as the relationship between the reading obtained from the measuring equipment with the test piece inserted and the reading obtained when no test piece is present. The transmittance value is expressed as the percentage ratio of the two readings.

B.2 Description of the measuring equipment

The equipment shall consist of

- the radiation source;
- the radiation receiver;
- the measuring mask;
- the optical path;
- the measuring circuitry.

B.2.1 Radiation source

An infra-red light-emitting diode (LED) with the following parameters shall be used:

wavelength at peak emission : 850 nm ± 50 nm

half-power bandwidth : ± 50 nm

B.2.2 Radiation receiver

A flat silicon photo diode shall be used. It shall be operated in the short circuit mode.

B.2.3 Measuring mask

The measuring mask shall have a thickness of 2 mm and a circular aperture of diameter d such that the area is 80 % to 100 % of the active area of the photo diode.

The surface of the mask shall be matt black.

The test piece shall be held firmly against the mask to cover the aperture and to ensure that no ambient light leaks past.

B.2.4 Optical path (figure B.1)

The optical path shall be perpendicular to the mask. The distance from the emitting surface of the LED to the mask shall be

$$L = \frac{d}{2 \tan \alpha} \text{ mm}$$

where d is in mm and α is the angle where the relative intensity of the LED is equal to, or greater than, 95% of the maximum intensity of the optical axis.

B.2.5 Finish

The whole assembly shall be enclosed in a matt black case.

B.2.6 Measuring circuitry (figure B.2)

The components of the measuring circuitry are

Copyright International Organization for Standardization
Provided by IHS under license with ISO
No reproduction or networking permitted without license from IHS Not for Resale

E	: regulated power supply with variable output voltage
R	: current-limiting resistor
LED	: light-emitting diode
Di	: silicon photo diode
A	: operational amplifier
R_{f0}, R_{f1}	: feedback resistors
S	: gain switch
V	: voltmeter

The forward current of the LED, and consequently its radiation power, can be varied by means of the power supply E.

Di is operating in the short circuit mode.

The output voltage of the operational amplifier is given by

$V_0 = I_k \times R_f$ where I_k is the short-circuit current of Di.

The output voltage is therefore a linear function of the light intensity.

R_{f0} and R_{f1} shall be low temperature-drift resistors with an accuracy of 1 %. The following ratio applies

$$\frac{R_{f0}}{R_{f1}} = \frac{1}{20}$$

B.3 Measuring method

B.3.1 Set switch S to position 0.

B.3.2 With no test piece mounted vary the supply voltage of E until voltmeter V reads full scale (100 %).

B.3.3 Mount a leader or trailer tape on the mask. The reading of the voltmeter shall be in the range 60 % to 100 %.

B.3.4 Mount a test piece of magnetic tape on the mask. Set switch S to position 1. Full deflection of the voltmeter now represents a light transmittance of 5 %.

Copyright International Organization for Standardization
Provided by IHS under license with ISO
No reproduction or networking permitted without license from IHS Not for Resale

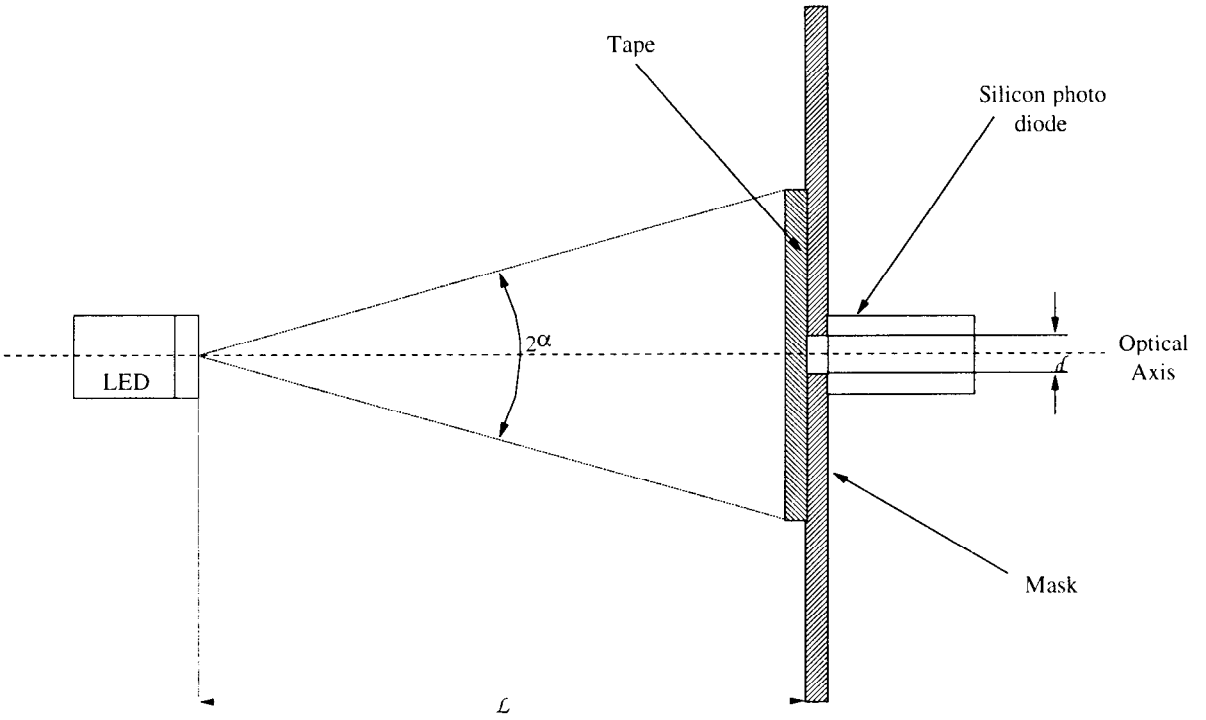

Figure B.1 - Optical arrangement

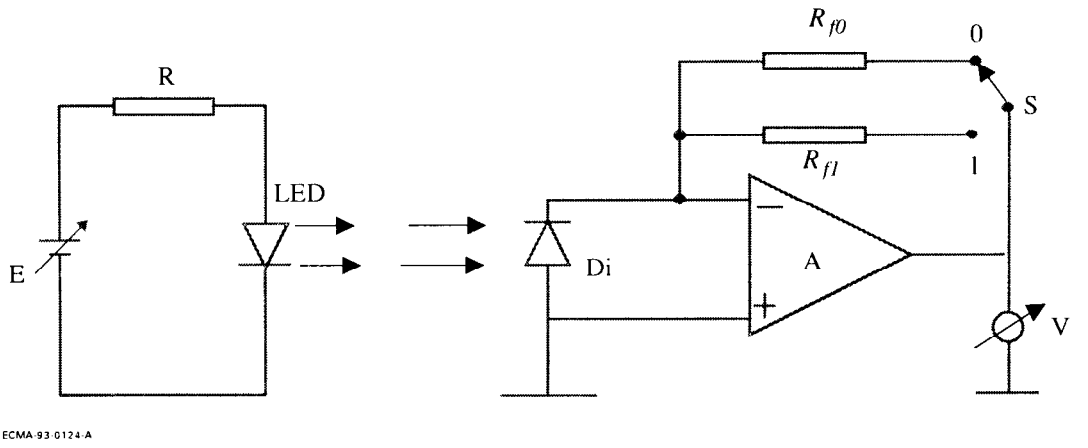

Figure B.2 - Measuring circuitry

Copyright International Organization for Standardization
Provided by IHS under license with ISO
No reproduction or networking permitted without license from IHS
Not for Resale

Annex C

(normative)

Measurement of Signal-to-Noise Ratio

The Signal-to-Noise Ratio shall be measured using a spectrum analyzer with a resolution bandwidth of 10 kHz.

Unless otherwise stated, the test conditions are those defined in clause 10 of this International Standard.

C.1 a.c. erase the tape to be tested.

C.2 Record the tape at 2 999,9 ftpmm. The associated recording frequency is denoted f_1.

C.3 Measure the rms signal amplitude by gating the sweep of the spectrum analyzer over a length of track that corresponds to an 70° ± 3° arc of scanner rotation. The centre of this arc shall be within 5° of the centre of the arc of the read head's contact with the tape. Each sweep yields one measured value. Compute the average of 8 measured values. This is S_{tape}.

During each of the same 8 sweeps, measure the total rms noise level at frequency f_2, where f_2 is 1 MHz less than f_1. Each sweep yields one measured value. Compute the average of 8 measured values. This is N_{total}.

C.4 Measure the rms read channel noise level at frequency f_2 over the same 70° arc, without a tape loaded but with the motors running. Each sweep yields one measured value. Compute the average of 8 measured values. This is N_{amp}.

C.5 Compute the Signal-to-Noise Ratio for this pass, $20 \log \frac{S_{tape}}{N_{tape}}$ dB, where

$$N_{tape} = \sqrt{N_{total}^2 - N_{amp}^2}\ .$$

$\frac{N_{amp}}{N_{tape}}$ shall be less than 0,7.

C.6 Repeat C3, C4, C5 for at least 64 passes. Take the average of the 64 Signal-to-Noise Ratios to determine the Signal-to-Noise Ratio for the tape (SNR_{tape}).

C.7 Repeat C.1 to C.6 for the Secondary Standard Reference Tape, to give SNR_{MSRT}.

The Signal-to-Noise Ratio characteristic is SNR_{tape} - SNR_{MSRT} dB.

Copyright International Organization for Standardization
Provided by IHS under license with ISO
No reproduction or networking permitted without license from IHS
Not for Resale

Annex D

(normative)

Method for determining the nominal and the maximum allowable recorded levels (pre-recording condition)

The following tests shall be carried out under the conditions defined in clause 10 of this International Standard.

D.1 Method for determining the Nominal Recorded Level

D.1.1 Read the section of the Secondary Standard Amplitude Calibration Tape that has been recorded at 4 499,8 ftpmm. note the read output and apply the appropriate calibration factor.

D.1.2 a.c. erase the Secondary Standard Reference Tape and record at 4 499,8 ftpmm, increasing the write current from a low value until the output on read equals, after applying the appropriate calibration factor, the value noted in D.1.1.

D.1.3 a.c. erase the interchange tape and record at 4 499,8 ftpmm with the current determined in D.1.2.

The read output from this tape is the Nominal Recorded Level for the physical recording density of 4 499,8 ftpmm.

D.1.4 Repeat D.1.1 to D.1.3 for the physical recording densities of 1 499,9 ftpmm, 1999,9 ftpmm and 2 999,9 ftpmm.

D.2 Method for determining the Maximum Allowable Recorded Level

D.2.1 a.c. erase the Secondary Standard Reference Tape and record at 4 499,8 ftpmm, increasing the write current until the output on read equals, after applying the appropriate calibration factor, 119 % of the value noted in D.1.1.

D.2.2 a.c. erase the interchange tape and record at 4 499,8 ftpmm with the current determined in D.2.1.

The read output from this tape is the Maximum Allowable Recorded Level for the physical recording density of 4 499,8 ftpmm.

D.2.3 Repeat D.2.1 and D.2.2 for the physical recording densities of 1 499,9 ftpmm, 1 999,9 ftpmm and 2 999,9 ftpmm.

D.3 Limits for the recorded levels

As a history of excessive recording levels can impair the operation of the recording system used in this International Standard it is necessary to prescribe limits for the recording levels to which the tape has been subjected since the last bulk erasure and for the levels used when recording a tape for interchange. These levels are, for each of the physical recording densities of 1 499,9 ftpmm, 1 999,9 ftpmm, 2 999,9 ftpmm and 4 499,8, the Maximum Allowable Recorded Level for that physical recording density.

Note - It is recommended that a tape to be used for interchange should not have been previously recorded at levels higher than its Nominal Recorded Levels at the physical recording densities of 1 499,9 ftpmm, 1 999,9 ftpmm, 2 999,9 ftpmm and 4 499,8 ftpmm.

Copyright International Organization for Standardization
Provided by IHS under license with ISO
No reproduction or networking permitted without license from IHS Not for Resale

Annex E

(normative)

Representation of 8-bit bytes by 10-bit patterns

E.1 The 8-bit bytes are represented with the most significant bit to the left and the least significant bit to the right. The 10-bit patterns are represented with the bit recorded first to the left and the bit recorded last to the right.

E.2 The magnetic recording system chosen requires that the d.c. level of the recorded signals be maintained near zero. All 10-bit patterns are either balanced to d.c. level of zero or have a d.c. imbalance of 6:4 or 4:6.

Each 10-bit pattern is accompanied by an indicator Q which instructs the translator which of the two alternative patterns should be selected for the next 10-bit pattern in order to maintain the lowest d.c. level.

Q' is the d.c. information of the previous pattern.

Q is the d.c. information of the current pattern.

E.3 The left-hand column indicates the hexadecimal notation of the 8-bit byte for ease of search.

Copyright International Organization for Standardization
Provided by IHS under license with ISO
No reproduction or networking permitted without license from IHS Not for Resale

		Q' = -1			Q' = 1		
	8-bit byte	10-Channel bit pattern	DC	Q	10-Channel bit pattern	DC	Q
(00)	00000000	0101010101	0	1	0101010101	0	-1
(01)	00000001	0101010111	0	-1	0101010111	0	1
(02)	00000010	0101011101	0	-1	0101011101	0	1
(03)	00000011	0101011111	0	1	0101011111	0	-1
(04)	00000100	0101001001	0	-1	0101001001	0	1
(05)	00000101	0101001011	0	1	0101001011	0	-1
(06)	00000110	0101001110	0	1	0101001110	0	-1
(07)	00000111	0101011010	0	1	0101011010	0	-1
(08)	00001000	0101110101	0	-1	0101110101	0	1
(09)	00001001	0101110111	0	1	0101110111	0	-1
(0A)	00001010	0101111101	0	1	0101111101	0	-1
(0B)	00001011	0101111111	0	-1	0101111111	0	1
(0C)	00001100	0101101001	0	1	0101101001	0	-1
(0D)	00001101	0101101011	0	-1	0101101011	0	1
(0E)	00001110	0101101110	0	-1	0101101110	0	1
(0F)	00001111	0101111010	0	-1	0101111010	0	1
(10)	00010000	1101010010	0	1	1101010010	0	-1
(11)	00010001	0100010010	2	-1	1100010010	-2	-1
(12)	00010010	0101010010	0	-1	0101010010	0	1
(13)	00010011	0101110010	0	1	0101110010	0	-1
(14)	00010100	1101110001	2	1	0101110001	-2	1
(15)	00010101	1101110011	2	-1	0101110011	-2	-1
(16)	00010110	1101110110	2	-1	0101110110	-2	-1
(17)	00010111	1101110010	0	-1	1101110010	0	1

--`,,```,,,,````-`-`,,`,,`,`,,`---
Copyright International Organization for Standardization
Provided by IHS under license with ISO
No reproduction or networking permitted without license from IHS
Not for Resale

		Q' = -1			Q' = 1		
	8-bit byte	10-Channel bit pattern	DC	Q	10-Channel bit pattern	DC	Q
(18)	00011000	0101100101	2	-1	1101100101	-2	-1
(19)	00011001	0101100111	2	1	1101100111	-2	1
(1A)	00011010	0101101101	2	1	1101101101	-2	1
(1B)	00011011	0101101111	2	-1	1101101111	-2	-1
(1C)	00011100	0101111001	2	1	1101111001	-2	1
(1D)	00011101	0101111011	2	-1	1101111011	-2	-1
(1E)	00011110	0101111110	2	-1	1101111110	-2	-1
(1F)	00011111	0101101010	2	-1	1101101010	-2	-1
(20)	00100000	0111010101	0	-1	0111010101	0	1
(21)	00100001	0111010111	0	1	0111010111	0	-1
(22)	00100010	0111011101	0	1	0111011101	0	-1
(23)	00100011	0111011111	0	-1	0111011111	0	1
(24)	00100100	1111010001	2	1	0111010001	-2	1
(25)	00100101	1111010011	2	-1	0111010011	-2	-1
(26)	00100110	1111010110	2	-1	0111010110	-2	-1
(27)	00100111	0111011010	0	-1	0111011010	0	1
(28)	00101000	0111110101	0	1	0111110101	0	-1
(29)	00101001	0111110111	0	-1	0111110111	0	1
(2A)	00101010	0111111101	0	-1	0111111101	0	1
(2B)	00101011	0010011011	2	-1	1010011011	-2	-1
(2C)	00101100	0111101001	0	-1	0111101001	0	1
(2D)	00101101	0111101011	0	1	0111101011	0	-1
(2E)	00101110	0111101110	0	1	0111101110	0	-1
(2F)	00101111	0111111010	0	1	0111111010	0	-1

Copyright International Organization for Standardization
Provided by IHS under license with ISO
No reproduction or networking permitted without license from IHS
Not for Resale

		Q' = -1			Q' = 1		
	8-bit byte	10-Channel bit pattern	DC	Q	10-Channel bit pattern	DC	Q
(30)	00110000	0111010010	0	1	0111010010	0	-1
(31)	00110001	1110010010	2	-1	0110010010	-2	-1
(32)	00110010	1111010010	0	-1	1111010010	0	1
(33)	00110011	1111110010	0	1	1111110010	0	-1
(34)	00110100	0111110001	2	1	1111110001	-2	1
(35)	00110101	0111110011	2	-1	1111110011	-2	-1
(36)	00110110	0111110110	2	-1	1111110110	-2	-1
(37)	00110111	0111110010	0	-1	0111110010	0	1
(38)	00111000	0111000101	2	-1	1111000101	-2	-1
(39)	00111001	0111000111	2	1	1111000111	-2	1
(3A)	00111010	0111001101	2	1	1111001101	-2	1
(3B)	00111011	0111001111	2	-1	1111001111	-2	-1
(3C)	00111100	0111011001	2	1	1111011001	-2	1
(3D)	00111101	0111011011	2	-1	1111011011	-2	-1
(3E)	00111110	0111011110	2	-1	1111011110	-2	-1
(3F)	00111111	0111001010	2	-1	1111001010	-2	-1
(40)	01000000	0100010101	2	1	1100010101	-2	1
(41)	01000001	0100010111	2	-1	1100010111	-2	-1
(42)	01000010	0100011101	2	-1	1100011101	-2	-1
(43)	01000011	0100011111	2	1	1100011111	-2	1
(44)	01000100	0101010001	2	1	1101010001	-2	1
(45)	01000101	0101010011	2	-1	1101010011	-2	-1
(46)	01000110	0101010110	2	-1	1101010110	-2	-1
(47)	01000111	0100011010	2	1	1100011010	-2	1

Copyright International Organization for Standardization
Provided by IHS under license with ISO
No reproduction or networking permitted without license from IHS
Not for Resale

		Q' = -1			Q' = 1		
	8-bit byte	10-Channel bit pattern	DC	Q	10-Channel bit pattern	DC	Q
(48)	01001000	0100110101	2	-1	1100110101	-2	-1
(49)	01001001	0100110111	2	1	1100110111	-2	1
(4A)	01001010	0100111101	2	1	1100111101	-2	1
(4B)	01001011	0100111111	2	-1	1100111111	-2	-1
(4C)	01001100	0100101001	2	1	1100101001	-2	1
(4D)	01001101	0100101011	2	-1	1100101011	-2	-1
(4E)	01001110	0100101110	2	-1	1100101110	-2	-1
(4F)	01001111	0100111010	2	-1	1100111010	-2	-1
(50)	01010000	0100100101	0	-1	0100100101	0	1
(51)	01010001	0100100111	0	1	0100100111	0	-1
(52)	01010010	0100101101	0	1	0100101101	0	-1
(53)	01010011	0100101111	0	-1	0100101111	0	1
(54)	01010100	0100111001	0	1	0100111001	0	-1
(55)	01010101	0100111011	0	-1	0100111011	0	1
(56)	01010110	0100111110	0	-1	0100111110	0	1
(57)	01010111	0100101010	0	-1	0100101010	0	1
(58)	01011000	0110100101	0	1	0110100101	0	-1
(59)	01011001	0110100111	0	-1	0110100111	0	1
(5A)	01011010	0110101101	0	-1	0110101101	0	1
(5B)	01011011	0110101111	0	1	0110101111	0	-1
(5C)	01011100	0110111001	0	-1	0110111001	0	1
(5D)	01011101	0110111011	0	1	0110111011	0	-1
(5E)	01011110	0110111110	0	1	0110111110	0	-1
(5F)	01011111	0110101010	0	1	0110101010	0	-1

--`,,```,,,,````-`-`,,`,,`,`,,`---

Copyright International Organization for Standardization
Provided by IHS under license with ISO
No reproduction or networking permitted without license from IHS Not for Resale

	8-bit byte	Q' = -1 10-Channel bit pattern	DC	Q	Q' = 1 10-Channel bit pattern	DC	Q
(60)	01100000	0010010101	0	-1	0010010101	0	1
(61)	01100001	0010010111	0	1	0010010111	0	-1
(62)	01100010	0010011101	0	1	0010011101	0	-1
(63)	01100011	0010011111	0	-1	0010011111	0	1
(64)	01100100	1010010001	2	1	0010010001	-2	1
(65)	01100101	1010010011	2	-1	0010010011	-2	-1
(66)	01100110	1010010110	2	-1	0010010110	-2	-1
(67)	01100111	0010011010	0	-1	0010011010	0	1
(68)	01101000	0010110101	0	1	0010110101	0	-1
(69)	01101001	0010110111	0	-1	0010110111	0	1
(6A)	01101010	0010111101	0	-1	0010111101	0	1
(6B)	01101011	0010111111	0	1	0010111111	0	-1
(6C)	01101100	0010101001	0	-1	0010101001	0	1
(6D)	01101101	0010101011	0	1	0010101011	0	-1
(6E)	01101110	0010101110	0	1	0010101110	0	-1
(6F)	01101111	0010111010	0	1	0010111010	0	-1
(70)	01110000	0010010010	0	1	0010010010	0	-1
(71)	01110001	1011010010	2	-1	0011010010	-2	-1
(72)	01110010	1010010010	0	-1	1010010010	0	1
(73)	01110011	1010110010	0	1	1010110010	0	-1
(74)	01110100	0010110001	2	1	1010110001	-2	1
(75)	01110101	0010110011	2	-1	1010110011	-2	-1
(76)	01110110	0010011110	2	-1	1010011110	-2	-1
(77)	01110111	0010110010	0	-1	0010110010	0	1

Copyright International Organization for Standardization
Provided by IHS under license with ISO
No reproduction or networking permitted without license from IHS
Not for Resale

		Q' = -1			Q' = 1		
	8-bit byte	10-Channel bit pattern	DC	Q	10-Channel bit pattern	DC	Q
(78)	01111000	0011100101	0	1	0011100101	0	-1
(79)	01111001	0011100111	0	-1	0011100111	0	1
(7A)	01111010	0011101101	0	-1	0011101101	0	1
(7B)	01111011	0011101111	0	1	0011101111	0	-1
(7C)	01111100	0011111001	0	-1	0011111001	0	1
(7D)	01111101	0011111011	0	1	0011111011	0	-1
(7E)	01111110	0011111110	0	1	0011111110	0	-1
(7F)	01111111	0011101010	0	1	0011101010	0	-1
(80)	10000000	1010010101	0	1	1010010101	0	-1
(81)	10000001	1010010111	0	-1	1010010111	0	1
(82)	10000010	1010011101	0	-1	1010011101	0	1
(83)	10000011	1010011111	0	1	1010011111	0	-1
(84)	10000100	1010001001	0	-1	1010001001	0	1
(85)	10000101	1010001011	0	1	1010001011	0	-1
(86)	10000110	1010001110	0	1	1010001110	0	-1
(87)	10000111	1010011010	0	1	1010011010	0	-1
(88)	10001000	1010110101	0	-1	1010110101	0	1
(89)	10001001	1010110111	0	1	1010110111	0	-1
(8A)	10001010	1010111101	0	1	1010111101	0	-1
(8B)	10001011	1010111111	0	-1	1010111111	0	1
(8C)	10001100	1010101001	0	1	1010101001	0	-1
(8D)	10001101	1010101011	0	-1	1010101011	0	1
(8E)	10001110	1010101110	0	-1	1010101110	0	1
(8F)	10001111	1010111010	0	-1	1010111010	0	1

Copyright International Organization for Standardization
Provided by IHS under license with ISO
No reproduction or networking permitted without license from IHS
Not for Resale

	8-bit byte	Q' = -1 10-Channel bit pattern	DC	Q	Q' = 1 10-Channel bit pattern	DC	Q
(90)	10010000	1100100101	0	1	1100100101	0	-1
(91)	10010001	1100100111	0	-1	1100100111	0	1
(92)	10010010	1100101101	0	-1	1100101101	0	1
(93)	10010011	1100101111	0	1	1100101111	0	-1
(94)	10010100	1100111001	0	-1	1100111001	0	1
(95)	10010101	1100111011	0	1	1100111011	0	-1
(96)	10010110	1100111110	0	1	1100111110	0	-1
(97)	10010111	1100101010	0	1	1100101010	0	-1
(98)	10011000	1010100101	2	-1	0010100101	-2	-1
(99)	10011001	1010100111	2	1	0010100111	-2	1
(9A)	10011010	1010101101	2	1	0010101101	-2	1
(9B)	10011011	1010101111	2	-1	0010101111	-2	-1
(9C)	10011100	1010111001	2	1	0010111001	-2	1
(9D)	10011101	1010111011	2	-1	0010111011	-2	-1
(9E)	10011110	1010111110	2	-1	0010111110	-2	-1
(9F)	10011111	1010101010	2	-1	0010101010	-2	-1
(A0)	10100000	1011010101	2	1	0011010101	-2	1
(A1)	10100001	1011010111	2	-1	0011010111	-2	-1
(A2)	10100010	1011011101	2	-1	0011011101	-2	-1
(A3)	10100011	1011011111	2	1	0011011111	-2	1
(A4)	10100100	1011001001	2	-1	0011001001	-2	-1
(A5)	10100101	1011001011	2	1	0011001011	-2	1
(A6)	10100110	0111001110	0	-1	0111001110	0	1
(A7)	10100111	1011011010	2	1	0011011010	-2	1

Copyright International Organization for Standardization
Provided by IHS under license with ISO
No reproduction or networking permitted without license from IHS
Not for Resale

		Q' = -1			Q' = 1		
	8-bit byte	10-Channel bit pattern	DC	Q	10-Channel bit pattern	DC	Q
(A8)	10101000	1011110101	2	-1	0011110101	-2	-1
(A9)	10101001	1011110111	2	1	0011110111	-2	1
(AA)	10101010	1011111101	2	1	0011111101	-2	1
(AB)	10101011	1110110010	2	1	0110110010	-2	1
(AC)	10101100	1011101001	2	1	0011101001	-2	1
(AD)	10101101	1011101011	2	-1	0011101011	-2	-1
(AE)	10101110	1011101110	2	-1	0011101110	-2	-1
(AF)	10101111	1011111010	2	-1	0011111010	-2	-1
(B0)	10110000	1101110101	0	1	1101110101	0	-1
(B1)	10110001	1101110111	0	-1	1101110111	0	1
(B2)	10110010	1101111101	0	-1	1101111101	0	1
(B3)	10110011	1101111111	0	1	1101111111	0	-1
(B4)	10110100	1101101001	0	-1	1101101001	0	1
(B5)	10110101	1101101011	0	1	1101101011	0	-1
(B6)	10110110	1101101110	0	1	1101101110	0	-1
(B7)	10110111	1101111010	0	1	1101111010	0	-1
(B8)	10111000	1011100101	0	-1	1011100101	0	1
(B9)	10111001	1011100111	0	1	1011100111	0	-1
(BA)	10111010	1011101101	0	1	1011101101	0	-1
(BB)	10111011	1011101111	0	-1	1011101111	0	1
(BC)	10111100	1011111001	0	1	1011111001	0	-1
(BD)	10111101	1011111011	0	-1	1011111011	0	1
(BE)	10111110	1011111110	0	-1	1011111110	0	1
(BF)	10111111	1011101010	0	-1	1011101010	0	1

Copyright International Organization for Standardization
Provided by IHS under license with ISO
No reproduction or networking permitted without license from IHS
Not for Resale

		Q' = -1			Q' = 1		
	8-bit byte	10-Channel bit pattern	DC	Q	10-Channel bit pattern	DC	Q
(C0)	11000000	1110010101	2	1	0110010101	-2	1
(C1)	11000001	1110010111	2	-1	0110010111	-2	-1
(C2)	11000010	1110011101	2	-1	0110011101	-2	-1
(C3)	11000011	1110011111	2	1	0110011111	-2	1
(C4)	11000100	1110001001	2	-1	0110001001	-2	-1
(C5)	11000101	1100100011	2	-1	0100100011	-2	-1
(C6)	11000110	0111001011	0	-1	0111001011	0	1
(C7)	11000111	1110011010	2	1	0110011010	-2	1
(C8)	11001000	1110110101	2	-1	0110110101	-2	-1
(C9)	11001001	1110110111	2	1	0110110111	-2	1
(CA)	11001010	1110111101	2	1	0110111101	-2	1
(CB)	11001011	1110111111	2	-1	0110111111	-2	-1
(CC)	11001100	1110101001	2	1	0110101001	-2	1
(CD)	11001101	1110101011	2	-1	0110101011	-2	-1
(CE)	11001110	1110101110	2	-1	0110101110	-2	-1
(CF)	11001111	1110111010	2	-1	0110111010	-2	-1
(D0)	11010000	1101000101	2	-1	0101000101	-2	-1
(D1)	11010001	1101000111	2	1	0101000111	-2	1
(D2)	11010010	1101001101	2	1	0101001101	-2	1
(D3)	11010011	1101001111	2	-1	0101001111	-2	-1
(D4)	11010100	1101011001	2	1	0101011001	-2	1
(D5)	11010101	1101011011	2	-1	0101011011	-2	-1
(D6)	11010110	1101011110	2	-1	0101011110	-2	-1
(D7)	11010111	1101001010	2	-1	0101001010	-2	-1

Copyright International Organization for Standardization
Provided by IHS under license with ISO
No reproduction or networking permitted without license from IHS
Not for Resale

		Q' = -1			Q' = 1		
	8-bit byte	10-Channel bit pattern	DC	Q	10-Channel bit pattern	DC	Q
(D8)	11011000	1110100101	0	-1	1110100101	0	-1
(D9)	11011001	1110100111	0	1	1110100111	0	-1
(DA)	11011010	1110101101	-0	1	1110101101	0	-1
(DB)	11011011	1110101111	0	-1	1110101111	0	1
(DC)	11011100	1110111001	0	1	1110111001	0	-1
(DD)	11011101	1110111011	0	-1	1110111011	0	1
(DE)	11011110	1110111110	0	-1	1110111110	0	1
(DF)	11011111	1110101010	0	-1	1110101010	0	1
(E0)	11100000	1111010101	0	1	1111010101	0	-1
(E1)	11100001	1111010111	0	-1	1111010111	0	1
(E2)	11100010	1111011101	0	-1	1111011101	0	1
(E3)	11100011	1111011111	0	1	1111011111	0	-1
(E4)	11100100	1111001001	0	-1	1111001001	0	1
(E5)	11100101	1111001011	0	1	1111001011	0	-1
(E6)	11100110	1111001110	0	1	1111001110	0	-1
(E7)	11100111	1111011010	0	1	1111011010	0	-1
(E8)	11101000	1111110101	0	-1	1111110101	0	1
(E9)	11101001	1111110111	0	1	1111110111	0	-1
(EA)	11101010	1011110010	2	1	0011110010	-2	1
(EB)	11101011	0111001001	0	1	0111001001	0	-1
(EC)	11101100	1111101001	0	1	1111101001	0	-1
(ED)	11101101	1111101011	0	-1	1111101011	0	1
(EE)	11101110	1111101110	0	-1	1111101110	0	1
(EF)	11101111	1111111010	0	-1	1111111010	0	1

--`,,```,,,,````-`-`,,`,,`,`,,`---

Copyright International Organization for Standardization
Provided by IHS under license with ISO
No reproduction or networking permitted without license from IHS

Not for Resale

	8-bit byte	Q' = -1 10-Channel bit pattern	DC	Q	Q' = 1 10-Channel bit pattern	DC	Q
(F0)	11110000	1101010101	0	-1	1101010101	0	1
(F1)	11110001	1101010111	0	1	1101010111	0	-1
(F2)	11110010	1101011101	0	1	1101011101	0	-1
(F3)	11110011	1101011111	0	-1	1101011111	0	1
(F4)	11110100	1101001001	0	1	1101001001	0	-1
(F5)	11110101	1101001011	0	-1	1101001011	0	1
(F6)	11110110	1101001110	0	-1	1101001110	0	1
(F7)	11110111	1101011010	0	-1	1101011010	0	1
(F8)	11111000	1111100101	2	-1	0111100101	-2	-1
(F9)	11111001	1111100111	2	1	0111100111	-2	1
(FA)	11111010	1111101101	2	1	0111101101	-2	1
(FB)	11111011	1111101111	2	-1	0111101111	-2	-1
(FC)	11111100	1111111001	2	1	0111111001	-2	1
(FD)	11111101	1111111011	2	-1	0111111011	-2	-1
(FE)	11111110	1100100110	2	-1	0100100110	-2	-1
(FF)	11111111	1111101010	2	-1	0111101010	-2	-1

Copyright International Organization for Standardization
Provided by IHS under license with ISO
No reproduction or networking permitted without license from IHS
Not for Resale

Annex F

(normative)

Measurement of bit shift

The tape to be measured shall have been written by the tape drive used for data interchange.

The tape shall have been written in any mode compatible with system operation.

F.1 Reading equipment

The tape shall be read on any drive which supports a track linearity of 3 µm max., as defined in annex G.

There are no absolute requirements placed on the output voltage of the head. However, the head design, the rotary transformer, the pre-amplifier, the head-to-tape speed and the equalizer shall be chosen so as to avoid problems due to a low signal-to-noise ratio.

- **Read head**

gap length	0,20 µm ± 0,05 µm
angle of the head gap	The gap in the head of positive azimuth shall make an angle of + 20° 00' ± 12' with the axis of the scanner.
	The gap in the head of negative azimuth shall make an angle of - 20° 00' ± 12' with the axis of the scanner.

- **Head-tape contact and read channel**

  The stability of the head-tape contact during the signal capture period (see F.2), together with the overall frequency response of the head, the rotary transformer, the pre-amplifier and the equalizer shall be sufficient to give a Signal-to-Noise ratio of better than 10 dB.

F.2 Measurement method

Bit shift shall be measured using computational signal processing of a digitized record of the playback voltage waveform at the equalizer output. The signal capture period shall start with the first bit of Margin Zone No. 1 (see 15.1) and finish when at least 25 000 Channel bits of the Main Data Zone have been read.

The signal processing algorithm shall perform the following steps

1) Input the digitized waveform from Margin Zone No.1 and the Preamble Zone into a timing extraction algorithm, e.g. a Fast Fourier Transform, which generates a series of fixed-interval time references for the nominal centres of the bit periods of the readback Channel bit signals from those zones. These references shall be sufficiently accurate that, when steps 2), 3) and 4) are executed, the bit error rate specified in 4) is achieved.

2) Extend this series of time references, at the same frequency and phase, into the remainder of the signal capture period. These references define the timing of the nominal centers of the bit periods of the readback Channel bit signals from the Main Data Zone.

3) Measure the playback voltage, to an accuracy of better than 2 %, at the nominal centre of each captured bit period from the Main Data Zone.

4) For each captured bit period from the Main Data Zone, deduce the state of the corresponding bit cell on the tape under test, by means of a detection method which has a bit error rate of less than 1 in 1000. For each bit cell which is magnetized in the direction of head travel, assign to it a data value D of +1. For each bit cell which is magnetized in the direction opposite to head travel, assign to it a data value D of -1.

5) For each bit cell, form a vector of 4 elements. The elements shall be numbered 1, 2, 3 and 4. The value D_3 of the third element shall be the data value D of the current bit cell. The value D_4 of the fourth element shall be the data value D of the next bit cell. The values D_1 and D_2 respectively of the first and second elements shall be the data values D of the previous two bit cells. Thus, the vector has a vector value i which is one of a set of 16 possible vector values.

Copyright International Organization for Standardization
Provided by IHS under license with ISO
No reproduction or networking permitted without license from IHS Not for Resale

6) For each of the 16 vector values, compute the average V_i of the playback voltages, measured in step 3), of all bit cells whose vectors have that vector value *i*.

7) Arrange the voltage averages and the data values to form 16 Volterra series, one per vector value. Each series shall be as defined below :

V_i =	A_{0000}	(d.c. term)
	$+ A_{0100} D_2 + A_{0010} D_3$	(signal terms)
	$+ A_{1000} D_1 + A_{0001} D_4$	(linear ISI terms)
	$+ A_{1100} D_1 D_2 + A_{0110} D_2 D_3 + A_{0011} D_3 D_4$	(non-linear ISI terms)
	$+ A_{1010} D_1 D_3 + A_{0101} D_2 D_4 + A_{1001} D_1 D_4$	(more non-linear ISI terms)
	$+ A_{1101} D_1 D_2 D_4 + A_{1011} D_1 D_3 D_4 + A_{1111} D_1 D_2 D_3 D_4$	(more non-linear ISI terms)
	$+ A_{1110} D_1 D_2 D_3 + A_{0111} D_2 D_3 D_4$	(non-linear ISI terms associated with bit shift)

8) Obtain the Volterra coefficients A_{0000} to A_{1111} by solving the 16 simultaneous equations formed in step 7).

9) The Volterra coefficients which indicate non-linear inter-symbol interference corresponding to bit shift are A_{1110} and A_{0111}.

Note

The theoretical basis for this method is described in

Newby, P. and Wood, R., 1986

"The effects of Nonlinear Distortion on Class IV Partial Response"

IEEE Transactions on Magnetics

Volume MAG-22, Number 5, September 1986, Page 1203

and an application of this method is described in

Williams, C.H., 1990

"The Measurement and Classification of Impairment for DVTR Transports"

8th Conference on Video, Audio and Data Recording

IEE Conference Publication No. 319, page 67

Copyright International Organization for Standardization
Provided by IHS under license with ISO
No reproduction or networking permitted without license from IHS
Not for Resale

Annex G

(normative)

Measurement of track edge linearity

G.1 Condition

The test piece shall be secured under a longitudinal tension between 0,05 N and 0,11 N.

G.2 Procedure

Define a rectangular box of 21,87 mm × 4 µm with its longitudinal axis at an angle $\alpha = 6° 22' 39{,}6''$ with the Tape Reference Edge and its centre on the ideal tape centreline (see 13.8), positioned over the leading edge of the track.

G.3 Requirement

Place the box, by varying its position only along the longitudinal axis of the tape, in such a position that the track's leading edge intersects its short sides only.

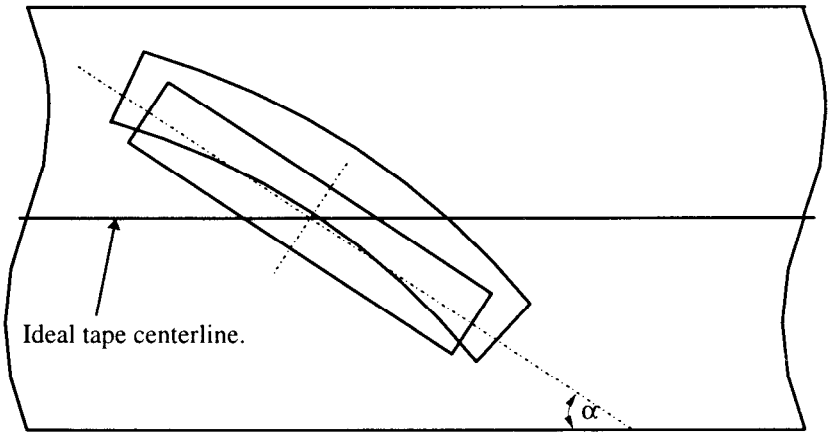

Figure G.1 Track edge linearity

Copyright International Organization for Standardization
Provided by IHS under license with ISO
No reproduction or networking permitted without license from IHS
Not for Resale

Annex H

(informative)

Recognition Holes

In other applications, the case of the cartridge specified by this Standard may be loaded with different types of tape. Table H.1 indicates the combinations of states of the Recognition Holes which are defined for existing applications and are recommended for future applications.

Table H.1 - Recognition Holes

Recognition Hole 1 2 3 4	Tape thickness	Tape coating	Track width	Pre-recorded	Format
0 0 0 0	13 µm	Metal Particle (MP)	13,6 µm	No	DDS
0 0 0 1	13 µm	MP	13,6 µm	Yes	DDS
0 0 1 0	Cleaning cartridge				
0 0 1 1	13 µm	Barium Ferrite	20,4 µm	Yes	DAT
0 1 0 0	9 µm	MP	13,6 µm	No	DDS
0 1 0 1	9 µm	MP	13,6 µm	Yes	DDS
0 1 1 0	Reserved				
0 1 1 1	9 µm	Barium Ferrite	20,4 µm	Yes	DAT
1 0 0 0	6,9 µm	MP+	9,1 µm	No	DDS-2
1 0 0 1	Reserved				
1 0 1 0	6,9 µm	MP ++	9,1 µm	No	DDS-3
1 0 1 1	Reserved				
1 1 0 0	Reserved				DDS-4
1 1 0 1	Reserved				
1 1 1 0	Reserved				
1 1 1 1	Reserved				

1 = hole open
0 = hole closed

In the rightmost column of table H.1, the terms have the following meanings:

DDS : The Recorded Format is either that of ISO/IEC 12247 (i.e. DDS) or of ISO/IEC 11557 (i.e. DDS-DC)

DDS-2 : The Recorded Format is that of ISO/IEC 13923.

DDS-3 : The Recorded Format is as specified in this Standard.

DDS-4 : A future Recorded Format

DAT : The Recorded Format is that of IEC 1119-1.

Copyright International Organization for Standardization
Provided by IHS under license with ISO
No reproduction or networking permitted without license from IHS Not for Resale

Annex J

(informative)

Means to open the lid

J.1 Figure J.1 shows the bottom side of the case. The two square areas defined by dimension $a = 2$ mm are the contact areas where the force opening the lid is to be applied.

J.2 Figure J.2 and J.3 show an example of implementation. The drive in which the cartridge is introduced has two pins positioned so that their ends lie below the two areas shown in figure J.1 when the cartridge is inserted. When the cartridge is then pushed downwards (figure J.2) the pins open the lid completely (figure J.3)

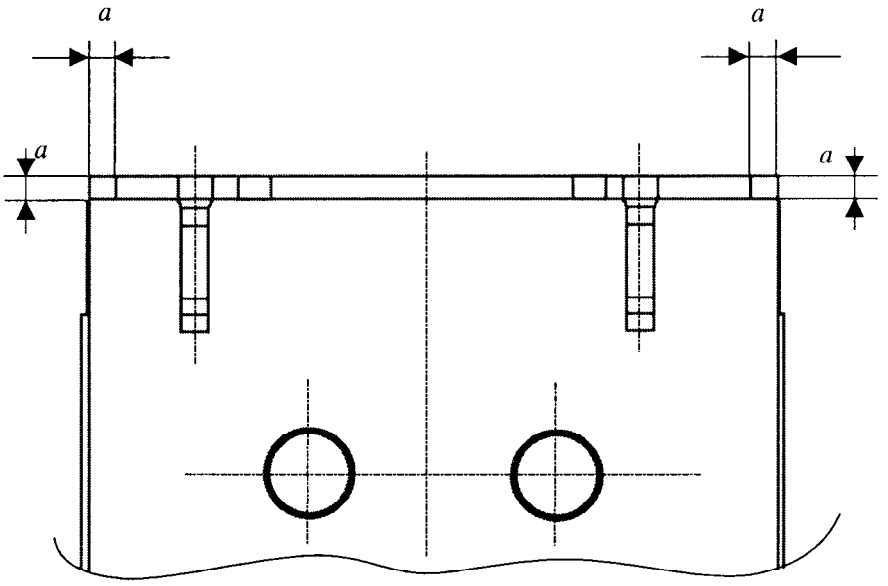

Figure J.1 - Bottom side of the case

Copyright International Organization for Standardization
Provided by IHS under license with ISO
No reproduction or networking permitted without license from IHS
Not for Resale

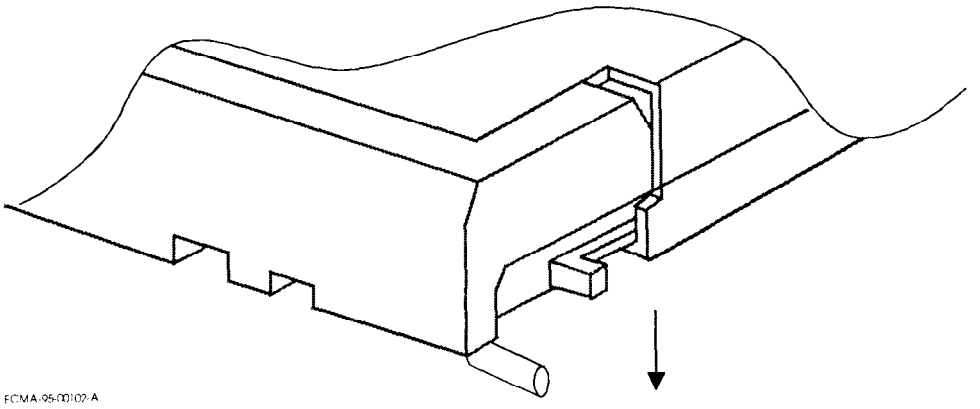

Figure J.2 Intermediate position within the drive

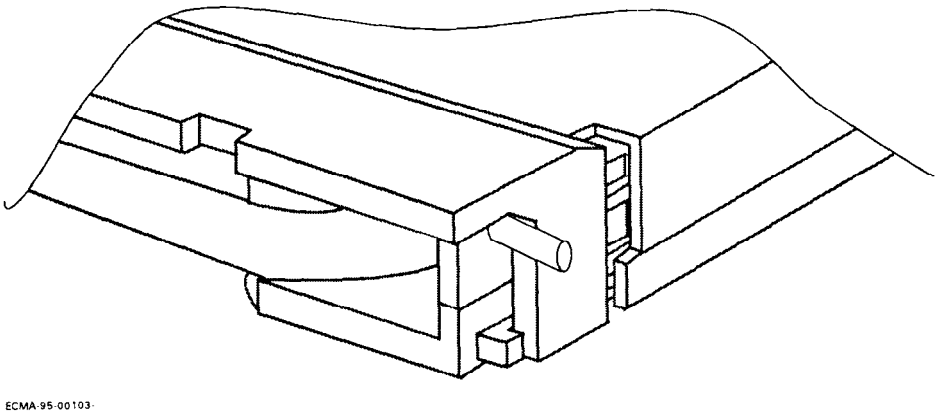

Figure J.3 Final position within the drive

Copyright International Organization for Standardization
Provided by IHS under license with ISO
No reproduction or networking permitted without license from IHS
Not for Resale

Annex K

(informative)

Recommendations for transportation

K.1 Environment

It is recommended that during transportation the cartridges are kept within the following conditions:

temperature : - 40 °C to 45 °C

relative humidity : 5 % to 80 %

wet bulb temperature : 26 °C max.

There shall be no condensation in or on the cartridge.

K.2 Hazards

Transportation of recorded cartridges involves three basic potential hazards.

K.2.1 Impact loads and vibrations

The following recommendations should minimize damage during transportation.

a) Avoid mechanical loads that would distort the cartridge shape.
b) Avoid dropping the cartridge more than 1 m.
c) Cartridges should be fitted into a rigid box containing adequate shock-absorbent material.
d) The final box must have a clean interior and a construction that provides sealing to prevent the ingress of dirt and water.
e) The orientation of the cartridges within the final box should be such that the axes of the tape reels are horizontal.
f) The final box should be clearly marked to indicate its correct orientation.

K.2.2 Extremes of temperature and humidity

a) Extreme changes in temperature and humidity should be avoided whenever possible.

b) Whenever a cartridge is received it should be conditioned in the operating environment for a period of at least 24 h.

K.2.3 Effects of stray magnetic fields

A nominal spacing of not less than 80 mm should exist between the cartridge and the outer surface of the shipping container. This should minimize the risk of corruption.

Copyright International Organization for Standardization
Provided by IHS under license with ISO
No reproduction or networking permitted without license from IHS Not for Resale

Annex L

(informative)

Read-After-Write

Read-After-Write (RAW) is a technique by which a Frame is read immediately after being written, examined to determine if it was written successfully, and re-written if not. The unit of RAW is a Frame. The RAW technique is applicable only in the Data Area of a tape, and is not applied to Amble Frames. Where RAW is applicable, it may be applied or not applied to individual Frames, regardless of whether or not it is applied to other Frames. When a Frame is identified, during a Read-After-Write check, as having been unsuccessfully written, it is rewritten further along the tape, i.e. the original Frame is not overwritten by the re-written Frame.

The primary intent of the RAW check is the detection of Frames containing errors of significant size and/or quantity, e.g. as caused by non-trivial media defects. Consequently, where RAW is applied it is not necessary that all Channel Bits be read correctly to avoid a re-write. Instead, the minimum requirement needs to be only that the quality of the recording and the quantity of correctly decoded data is such that the data of the entire Frame is recoverable with sufficient margin for reliable data interchange.

The actual performance of a Frame against this requirement can be assessed in a number of ways, for example by measuring the length, severity and/or distribution of missing pulses, counting the number of errors detected by C1 and/or C2, comparing written and read checksums, comparing written and read data on a sampled or full time basis.

Where a Frame has been rewritten multiple instances of it will exist. It is possible that a subsequent read will successfully recover data from more than one instance of a Frame. In such case, it is recommended that the last successfully recovered instance be used, since previous ones may have been considered unsuccessfully written.

Copyright International Organization for Standardization
Provided by IHS under license with ISO
No reproduction or networking permitted without license from IHS
Not for Resale

Annex M

(informative)

Example of the content of a Basic Group No. 0

Byte Position	Field Name	Description of Contents
1-128	Name of Manufacturer	Name of the manufacturer of the drive that initialized or wrote the partition.
129-160	Model Number	Model number or identifier of the drive that initialized or wrote the partition.
161-192	Serial Number	Serial number assigned to the drive.
193-224	Revision Number	Revision numbers of drive components: 193-200 Sub-assembly 1 201-208 Sub-assembly 2 209-216 Sub-assembly 3 217-224 Sub-assembly 4
225-256	Host Interface Type and Address	Type of host interface, e.g. SCSI and connection address. 225-240 Host Interface Type 241-256 Address
257-272	Date and Time YYMMDDHHMMSS	Date and time the partition was initialized 257-258 YY year = 1980 + YY 259-260 MM month 261-262 DD day 263-264 HH hour 265-266 MM minutes 267-268 SS seconds
273-400	Tape Label or Identifier	An indicator of the partition's content.
401-17 468	Reserved	All bytes set to all ZEROs
17 469-384 296	Manufacturer's data	Not specified

Figure M.1 - Example of a Basic Group No. 0

All entries in byte positions 1 to 400 are followed by a byte set to all ZEROs and the remainder of the field is padded with bytes which are set to all ZEROs.

Copyright International Organization for Standardization
Provided by IHS under license with ISO
No reproduction or networking permitted without license from IHS
Not for Resale

© ISO/IEC

ICS 35.220.20

Descriptors: data processing, information interchange, data recording, magnetic recording, helical scan recording, data recording devices, magnetic tapes, 3,81 mm magnetic tapes, magnetic tape cartridges, specifications, dimensions, physical properties, magnetic properties, formats, track formats, interchangeability.

Price based on 98 pages

Copyright International Organization for Standardization
Provided by IHS under license with ISO
No reproduction or networking permitted without license from IHS

Not for Resale