INTERNATIONAL STANDARD

ISO/IEC 14709-1

1997

AMENDMENT 1
2004-08

Amendment 1

Information technology – Configuration of customer premises cabling (CPC) for applications –

Part 1: Integrated services digital network (ISDN) basic access

© IEC 2004 Droits de reproduction réservés — Copyright - all rights reserved

International Electrotechnical Commission, 3, rue de Varembé, PO Box 131, CH-1211 Geneva 20, Switzerland
Telephone: +41 22 919 02 11 Telefax: +41 22 919 03 00 E-mail: inmail@iec.ch Web: www.iec.ch

Commission Electrotechnique Internationale
International Electrotechnical Commission
Международная Электротехническая Комиссия

PRICE CODE E

For price, see current catalogue

--`,,,,,,-`-`,,`,,`,`,,`---

Copyright International Organization for Standardization
Reproduced by IHS under license with ISO
No reproduction or networking permitted without license from IHS

Not for Resale

FOREWORD

Amendment 1 to International Standard ISO/IEC 14709-1 was prepared by subcommittee 25: Interconnection of information technology equipment, of ISO/IEC joint technical committee 1: Information technology.

Page ii

Contents

Add the following new title:

Annex A (normative) Characteristics of Category 3 and Category 5 (ISO/IEC 11801:1995) cables

Add, after Annex B:
Bibliography

Page iii

Foreword

Add, after the third paragraph, the following two new paragraphs:

Amendment 1 (2004) replaces subclause 6.6 of ISO/IEC 14709-1 by a generalised specification of the star configuration as another configuration option for dedicated ISDN cabling.

The requirements in this part of ISO/IEC 14709 have been derived from ITU-T Recommendation I.430 (Blue Book) and EN 300 012.

Delete the last paragraph of the introduction:

Annexes A and B of this part of ISO/IEC 14709 are for information only.

--`,,,,,,-`-`,,`,,`,`,,`---

Copyright International Organization for Standardization
Reproduced by IHS under license with ISO
No reproduction or networking permitted without license from IHS Not for Resale

Page iv

Introduction

Add, after the existing paragraph, the following two new paragraphs:

For general safety requirements refer to IEC 60950-1 and for EMC requirements refer to IEC 61000-4 and CISPR 22.

Category 3 and category 5 cable definitions and requirements used in this standard are from the first edition of ISO/IEC 11801 (1995). The relevant values are given in Annex A, since the first edition of ISO/IEC 11801 has been replaced. Category 5 cable requirements as stated in ISO/IEC 11801 (first edition, 1995) are less stringent and do not include additional requirements specified in ISO/IEC 11801 (second edition, 2002).

Page 1

Scope

Add, at the end of the scope, the following new paragraph:

General safety and EMC requirements have not been included in this standard.

Page 1

2 Normative references

Replace "IEC 603-7" *by* "IEC 60603-7".
This change applies to the whole document.

Add the following new document after publication IEC 60603-7:

EN 300 012-1, Integrated Services Digital Network (ISDN) – Basic User-Network Interface (UNI) – Part 1: Layer 1 specification

Page 2

4.1 Abbreviations

Add:

CP Consolidation point

Page 8

6.6 The star configuration

Replace the existing text of subclause 6.6 by the following new text and renumber the following figures accordingly.

Copyright International Organization for Standardization
Reproduced by IHS under license with ISO
No reproduction or networking permitted without license from IHS Not for Resale

The star configuration which is shown in Figure 6a) is primarily intended for the domestic and small office/home office (SOHO) environment.

Requirements

The NT shall be configured in short passive bus mode. The maximum number of branches shall be 4 (four). The maximum length of cabling from the NT to the farthest telecommunications outlet in any branch (i.e. $d_8 + d_9$) shall not exceed

a) 50 m, if either installed balanced cables match Category 3 or if d_8 and d_9 are implemented mixing Category 3 and Category 5 (ISO/IEC 11801:1995) cables. Extension cords shall not be used to extend the cabling distance from NT to the socket beyond 50 m,

b) 100 m, if installed balanced cables match Category 5 (ISO/IEC 11801:1995). Extension cords shall not be used to extend the cabling distance from NT to the socket beyond 100 m.

NOTE For this application the minimum requirements of Category 3 cables and Category 5 cables as specified in the first edition of ISO/IEC 11801:1995 are applicable, see Annex A. For this application the low frequency requirements given in Annex A are not explicitly specified in ISO/IEC 11801: 2002.

It is recommended not to use spurs to connect telecommunications outlets. However, if spurs are present they shall not exceed 1 m.

The polarity of each wire of the balanced cable unit shall be maintained throughout the cabling.

The 100 Ω termination resistors shall be permanently connected to the star point for proper administration of this configuration.

The maximum number of telecommunications outlets in a branch may exceed 1 (one) provided that the maximum number of TEs attached does not exceed 4 (four).

The individual branches of the star configuration may be connected at the star point in the following ways:

— hardwired (as indicated in Figure 6a);

— using connecting hardware in accordance with ISO/IEC 11801 (see Figure 6b).

--`,,,,,,-`-`,,`,,`,`,,`---

Copyright International Organization for Standardization
Reproduced by IHS under license with ISO
No reproduction or networking permitted without license from IHS Not for Resale

a) Star configuration

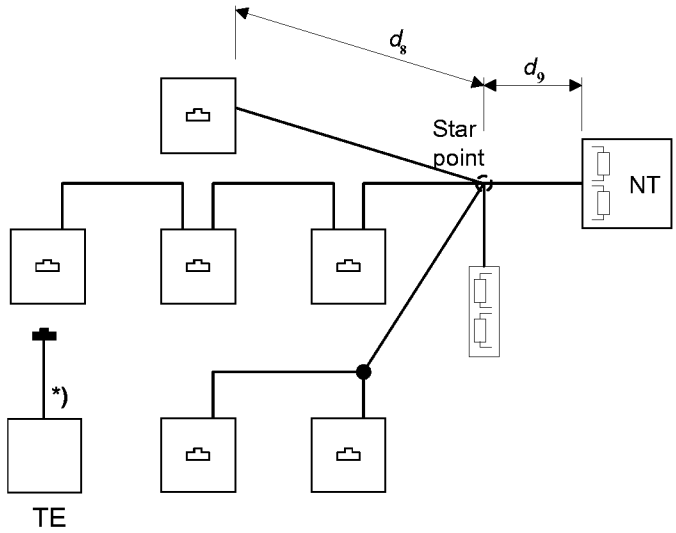

d_8 Length from the star point to the farthest telecommunications outlet in any branch

d_9 Length from the star point to NT

*) TE connecting cord or integral cord

Maximum number of telecommunications outlets: 12 (twelve)

Maximum number of terminals: 4 (four)

b) Implementation example of connections at the star point

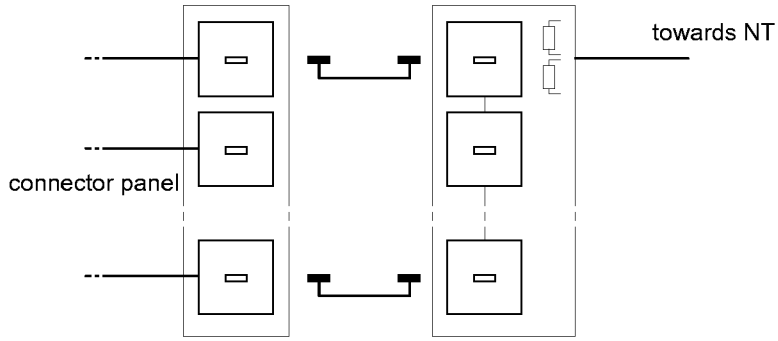

Figure 6 – ISDN star configuration

Renumber figures 6 to 9 accordingly.

6.7.1 General

Figure on page 9 (previously Figure 6, now Figure 7):

Replace "TP" *with "*CP" *and replace the existing NOTE by the following new NOTE:*

NOTE In installations that were implemented on the basis of the replaced publication ISO/IEC:11801:1995 (edition 1.0) and ISO/IEC 11801:2000 (edition 1.2) TPs may be found instead of CPs.

Copyright International Organization for Standardization
Reproduced by IHS under license with ISO
No reproduction or networking permitted without license from IHS Not for Resale

Page 15

Annex A

Add the following new annex A and rename the existing annex A as Bibliography.

Annex A

(normative)

Characteristics of Category 3 and Category 5 (ISO/IEC 11801:1995) cables

The general electrical characteristics of installed balanced 100 Ω Category 3 as well as of 100 Ω and 120 Ω Category 5 cables are given in Table A.1. The required attenuation of these cables is given in Table A.2. The requirements in Table A.1 and Table A.2 are derived from the category 3 and category 5 cable requirements, specified in the first edition of ISO/IEC 11801: 1995. The Category 5 cable referenced in the second edition of ISO/IEC 11801:2002 is the recommended media for new installations.

--`,,,,,,-`-`,,`,,`,`,,`---

Copyright International Organization for Standardization
Reproduced by IHS under license with ISO
No reproduction or networking permitted without license from IHS

Not for Resale

Table A.1 - General electrical characteristics of installed balanced 100 Ω and 120 Ω cables

Electrical characteristics		Frequency	Cable type		
		MHz	100 Ω Category 3	100 Ω Category 5	120 Ω Category 5
a)	Characteristic impedance Z_0 Ω	0,064 [b]	125 ± 25	125 ± 25	125 ± 45
		≥1	100 ± 15	100 ± 15	120 ± 15
b)	Maximum d.c. loop resistance Ω/100 m	d.c.	30		
c)	Minimum velocity of propagation	1	0,4 × *c*	0,60 × *c*	
		10	0,6 × *c*	0,65 × *c*	
		100	N/A	0,65 × *c*	
d)	Maximum resistance unbalance %	d.c.	3		
e)	Maximum capacitance unbalance pair to ground [b] pF/km	0,000 8 or 0,001	1 600		
f)	Maximum transfer impedance [a] mΩ/m	10	100		
g)	Minimum d.c. insulation resistance MΩ × km	d.c.	150		
h)	Dielectric strength conductor/conductor and conductor/screen	d.c. or a.c.	750 V, 1 min 500 V, 1 min		
i)	Minimum structural return loss dB at 100 m cable length	1 [b] to 100	ffs		

[a] Only applicable when screens are present. Other measurement methods and values covering the coupling parameters of screened and unscreened cables are under consideration.

[b] These requirements are no longer explicitly specified in the second edition of ISO/IEC 11801: 2002. Category 5 cables (having minimum media requirements for ISO/IEC 11801 Class D channels) will in practice meet these requirements according to the backward compatibility requirements, wherein a transmission channel that meets the minimum requirements of ISO/IEC 11801: 2002 always meets or exceeds the transmission requirements of ISO/IEC 11801: 1995.

Copyright International Organization for Standardization
Reproduced by IHS under license with ISO
No reproduction or networking permitted without license from IHS
Not for Resale

Table A.2 - Attenuation of installed balanced 100 Ω and 120 Ω cables

Electrical characteristics	Frequency	Cable type		
	MHz	100 Ω Category 3	100 Ω Category 5	120 Ω Category 5
Maximum attenuation dB/100 m	0,064 [a]	0,9	0,8	0,8
	0,256 [a]	1,3	1,1	1,1
	0,512 [a]	1,8	1,5	1,5
	0,772 [a]	2,2	1,8	1,8
	1	2,6	2,1	2,0
	4	5,6	4,3	3,8
	10	9,8	6,6	5,7
	16	13,1	8,2	7,1
	20	N/A	9,2	8,0
	31,25	N/A	11,8	10,0
	62,5	N/A	17,1	15,0
	100	N/A	22,0	19,0

[a] These requirements are no longer explicitly specified in the second edition of ISO/IEC 11801:2002. Category 5 cables (having minimum media requirements for ISO/IEC 11801 Class D channels) will in practice meet these requirements according to the backward compatibility requirements, wherein a transmission channel that meets the minimum requirements of ISO/IEC 11801:2002 always meets or exceeds the transmission requirements of ISO/IEC 11801:1995.

Copyright International Organization for Standardization
Reproduced by IHS under license with ISO
No reproduction or networking permitted without license from IHS
Not for Resale

Annex B

Replace Table B.1 by the following new Table B.1:

Table B.1 - Examples of recommended maximum distances for typical installations

No.	Cable type	d_1 m	d_2 m	d_3 m	d_4 m	d_5 m	d_6 m	d_7 m	d_8 m	d_9 m	Source of specification
1	0,5 mm CW1308	400	100	45	250	FFS [d]	FFS	FFS	FFS	FFS	UK
2	0,5 mm CW1700	800	150	70	400	FFS	FFS	FFS	FFS	FFS	UK
3	0,5 mm CW1750	800	150	70	400	FFS	FFS	FFS	FFS	FFS	UK
4	J-Y(ST)Y 2x2x0,6	600 [a]	120 [a]	25 [b]	450	FFS	FFS	FFS	FFS	FFS	Germany
5	J-Y(ST)Y>10x2x0,6	700 [a]	130 [a]	27 [b]	495	FFS	FFS	FFS	FFS	FFS	Germany
6	J-2Y(ST)Y 2x2x0,6 ST III BD	900 [a]	180 [a]	35 [b]	615	FFS	FFS	FFS	FFS	FFS	Germany
7	J-2Y(ST)Y>10x2x0,6 ST III BD	1 000 [a]	180 [a]	35 [b]	615	FFS	FFS	FFS	FFS	FFS	Germany
8	J-02YSH 2..10x2x0,6 ST II BD [c]	1 000 [a]	200 [a]	43 [b]	750	FFS	FFS	FFS	FFS	FFS	Germany
9	J-2Y(ST)CH 2x2x0,6 ST VI BD	920 [a]	180 [a]	39 [b]	690	FFS	FFS	FFS	FFS	FFS	Germany
10	278-4-6 [c] (4 pairs; 0,6 mm)	800	130	30	500	0,5	90	90	FFS	FFS	France
11	L120 (4 pairs; 0,6 mm)	1000	150	50	500	0,5	90	90	FFS	FFS	France
12	Cat. 3: 0,4 mm; 4 pairs; 2 pairs	350	150	50	200	FFS	FFS	FFS	FFS	FFS	Japan, US [e]
13	Cat. 3: 0,5 mm; 4 pairs; 2 pairs	550	150	50	350	FFS	FFS	FFS	FFS	FFS	Japan, US [e]
14	Cat. 3: 0,65 mm, 4 pairs; 2 pairs	750	150	50	550	FFS	FFS	FFS	FFS	FFS	Japan, US [e]

[a] Worst case calculations.

[b] Theoretical values.

[c] This cable is not recommended in cases where the use of primary access is envisaged.

[d] FFS = For further study.

[e] The performance and distance capabilities of different cables may vary. Check with the manufacturer for specific information on distances supported for different configurations.

Copyright International Organization for Standardization
Reproduced by IHS under license with ISO
No reproduction or networking permitted without license from IHS Not for Resale

Page 15

ANNEX A

Change Annex A to Bibliography and insert it after Annex B.

Delete the publication date for all the entries except for ISO/IEC 11801.

Add the following new references:

ISO/IEC 11801:2002, 2nd edition: Information technology – Generic cabling for customer premises

Replace the entry for "IEC 950:1991" *by:*

IEC 60950-1, Information technology equipment – Safety – Part 1: General requirements

Delete the entry for "ETS 300 012"*:*

Delete entries "ETS 300 047-1, ETS 300 047-3, ETS 300 047-5".

Replace "IEC 1000-4" *by* "IEC 61000-4 series".

--`,,,,,,,-`-`,,`,,`,`,,`---

Copyright International Organization for Standardization
Reproduced by IHS under license with ISO
No reproduction or networking permitted without license from IHS Not for Resale

Copyright International Organization for Standardization
Reproduced by IHS under license with ISO
No reproduction or networking permitted without license from IHS
Not for Resale

ISBN 2-8318-7614-1



ICS 35.200

Typeset and printed by the IEC Central Office
GENEVA, SWITZERLAND

Copyright International Organization for Standardization
Reproduced by IHS under license with ISO
No reproduction or networking permitted without license from IHS

Not for Resale

STD.ISO 14709-1-ENGL 1997 ■ 4851903 0717816 650 ■

INTERNATIONAL STANDARD

ISO/IEC 14709-1

First edition
1997-09-01

Information technology — Configuration of Customer Premises Cabling (CPC) for applications —

Part 1:
Integrated Services Digital Network (ISDN) basic access

Technologies de l'information — Configuration du câblage dans les locaux d'usagers (CPC) pour les applications —

Partie 1: Accès de base au réseau numérique à intégration de services (RNIS)

This material is reproduced from ISO documents under International Organization for Standardization (ISO) Copyright License number IHS/ICC/1996. Not for resale. No part of these ISO documents may be reproduced in any form, electronic retrieval system or otherwise, except as allowed in the copyright law of the country of use, or with the prior written consent of ISO (Case postale 56, 1211 Geneva 20, Switzerland, Fax +41 22 734 10 79), IHS or the ISO Licensor's members.

Reference number
ISO/IEC 14709-1:1997(E)

Copyright International Organization for Standardization
Reproduced by IHS under license with ISO
No reproduction or networking permitted without license from IHS

Not for Resale

Contents

Foreword iii

Introduction iv

1 Scope 1

2 Normative references 1

3 Definitions 1

4 Abbreviations and symbols 2
4.1 Abbreviations 2
4.2 Symbols 2

5 Design requirements 3
5.1 General 3
5.2 Insertion loss 3
5.3 Longitudinal conversion loss 3
5.4 Round trip delay 3
5.5 Power feeding 3
5.6 Electromagnetic environment 4
5.7 Spurs 4
5.8 Near-end crosstalk loss (NEXT) 4

6 Configurations 4
6.1 General 4
6.2 The point-to-point configuration 5
6.3 The short passive bus configuration 6
6.4 The extended passive bus configuration 6
6.5 The Y-configuration 7
6.6 The star configuration 8
6.7 Implementation over structured cabling systems 8

7 Minimum requirements for cabling components 11
7.1 General 11
7.2 Cables 11
7.3 Terminal cords 11
7.4 Terminating resistors 11
7.5 Outlets and joint boxes 11
7.6 Cross-connect products/patch cords 12

8 Cabling qualification 12
8.1 General 12
8.2 Spurs 13
8.3 Cabling integrity 13
8.4 D.c. loop resistance 13
8.5 D.c. lead resistance unbalance 13
8.6 Insulation resistance 13
8.7 Insertion loss 13
8.8 Round trip delay 14
8.9 Characteristic impedance 14
8.10 Near end crosstalk (NEXT) loss 14
8.11 Impulsive noise 14
8.12 Bit error rates 14
8.13 Longitudinal conversion loss 14

Annex A (informative) **Bibliography** 15

Annex B (informative) **Examples of maximum distances for specific common cables** 16

© ISO/IEC 1997

All rights reserved. Unless otherwise specified, no part of this publication may be reproduced or utilized in any form or by any means, electronic or mechanical, including photocopying and microfilm, without permission in writing from the publisher.

ISO/IEC Copyright Office • Case postale 56 • CH-1211 Genève 20 • Switzerland

Printed in Switzerland

Copyright International Organization for Standardization
Reproduced by IHS under license with ISO
No reproduction or networking permitted without license from IHS Not for Resale

© ISO/IEC

Foreword

ISO (the International Organization for Standardization) and IEC (the International Electrotechnical Commission) form the specialized system for worldwide standardization. National bodies that are members of ISO or IEC participate in the development of International Standards through technical committees established by the respective organization to deal with particular fields of technical activity. ISO and IEC technical committees collaborate in fields of mutual interest. Other international organizations, governmental and non-governmental, in liaison with ISO and IEC, also take part in the work.

In the field of information technology, ISO and IEC have established a joint technical committee, ISO/IEC JTC 1. Draft International Standards adopted by the joint technical committee are circulated to national bodies for voting. Publication as an International Standard requires approval by at least 75 % of the national bodies casting a vote.

International Standard ISO/IEC 14709-1 was prepared by Joint Technical Committee ISO/IEC JTC 1, *Information technology*, Subcommittee SC 25, *Interconnection of information technology equipment.*

ISO/IEC 14709 consists of the following parts, under the general title *Information technology — Configuration of Customer Premises Cabling (CPC) for applications*:

– *Part 1: Integrated Services Digital Network (ISDN) basic access*

– *Part 2: Integrated Services Digital Network (ISDN) primary access*

Annexes A and B of this part of ISO/IEC 14709 are for information only.

Copyright International Organization for Standardization
Reproduced by IHS under license with ISO
No reproduction or networking permitted without license from IHS
Not for Resale

 © ISO/IEC

Introduction

This part of ISO/IEC 14709 is intended for use by those designing, planning or procuring cabling for ISDN basic access within a customer's premises. The configurations in this part of ISO/IEC 14709 are designed to be effective when either implemented with cabling having the recommended characteristics, or implemented with the components specified in clause 7. In addition, guidance is given for the use of generic cabling in accordance with ISO/IEC 11801.

Copyright International Organization for Standardization
Reproduced by IHS under license with ISO
No reproduction or networking permitted without license from IHS
Not for Resale

INTERNATIONAL STANDARD © ISO/IEC **ISO/IEC 14709-1:1997(E)**

Information technology — Configuration of Customer Premises Cabling (CPC) for applications —

Part 1:
Integrated Services Digital Network (ISDN) basic access

1 Scope

This part of ISO/IEC 14709 defines the requirements for the design and configuration of customer premises cabling for the connection of basic access ISDN equipment.

It defines

- design requirements for ISDN basic access with point-to-point and point-to-multipoint cabling configurations;
- minimum cabling requirements for the installation of new cabling;[1)]
- criteria for the use of generic cabling;
- criteria for the use of existing cabling.

This part of ISO/IEC 14709 applies to the customer premises cabling. It describes the cabling requirements, needed to transmit ISDN basic access signals as defined by ITU-T Recommendation I.430. The requirements placed on the customer premises cabling are solely those necessary to enable terminal equipment conforming to ITU-T Rec. I.430 to operate into the Network Termination (NT) via configurations defined in this part of ISO/IEC 14709.

2 Normative references

The following standards contain provisions which, through reference in this text, constitute provisions of this part of ISO/IEC 14709. At the time of publication, the editions indicated were valid. All standards are subject to revision, and parties to agreements based on this part of ISO/IEC 14709 are encouraged to investigate the possibility of applying the most recent editions of the standards indicated below. Members of IEC and ISO maintain registers of currently valid International Standards.

ISO/IEC 8877:1992,	*Information technology - Telecommunications and information exchange between systems - Interface connector and contact assignments for ISDN Basic Access Interface located at reference points S and T.*
ISO/IEC 11801:1995,	*Information technology - Generic cabling for customer premises.*
IEC 603-7:1996,	*Connectors for frequencies below 3 MHz for use with printed boards - Part 7: Detail specification for connectors, 8-way, including fixed and free connectors with common mating features, with assessed quality.*
ITU-T Rec I.430 (Blue Book)	*ISDN user-network interface; Layer 1 recommendations.*

3 Definitions

The meaning of the term *round trip delay* can be found in ITU-T Recommendation I.430 (Blue Book), A.2.

Furthermore, for the purposes of this part of ISO/IEC 14709, the following definitions apply.

3.1 cabling: The assembly of all cables, connections, patch panels and other passive components which comprise the telecommunications infrastructure.

3.2 network termination: The functional group on the network side of a user-network interface.

NOTE: A network termination always comprises a transmission part NT1 and optionally a switching part NT2.

3.3 power feeding: The function which provides for the capability to transfer power across the interface of the NT.

3.4 terminal equipment: The functional group on the user side of a user-network interface.

NOTE: Terminal equipment includes terminal(s), terminal adapter(s) and, if any, NT2 functional group.

---

1) Although this part of ISO/IEC 14709 specifies the minimum requirements for cabling dedicated to ISDN basic access, it is highly recommended that cabling newly installed complies with ISO/IEC 11801 class B or higher.

Copyright International Organization for Standardization
Reproduced by IHS under license with ISO
No reproduction or networking permitted without license from IHS
Not for Resale

 © ISO/IEC

4 Abbreviations and symbols

4.1 Abbreviations

BD	Building distributor
CD	Campus distributor
FD	Floor distributor
FFS	For further study
ISDN	Integrated services digital network
NEXT	Near-end crosstalk loss
NT1	Network termination 1
NT2	Network termination 2
S	S reference point
S_0	S_0 interface
SC	Structured cabling
T	T reference point
TE	Terminal equipment
TP	Transition Point
TR	Terminating resistor

NOTE: The meanings of the abbreviations S, S_0 and T conform to ITU-T Recommendation I.430.

4.2 Symbols

cable

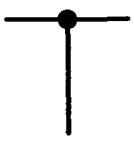

spur/tap with a junction to a cable which is the terminated bus



Network Termination



Terminating Resistors

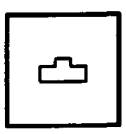

outlet according to IEC 603-7



plug according to IEC 603-7

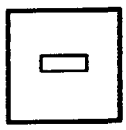

any socket

Copyright International Organization for Standardization
Reproduced by IHS under license with ISO
No reproduction or networking permitted without license from IHS
Not for Resale

■ any plug

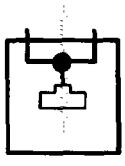

Joint at outlet

5 Design requirements

5.1 General

Signals passing between the NT and TE(s) for the various configurations are subject to attenuation, delay and distortion. Cabling components (including extension cords, adapters, cross-connect components, outlets, junction boxes, cables, spurs etc.) and connected terminals all contribute to these effects. The design requirements for the cabling are dependent on the configuration chosen.

5.2 Insertion loss

The insertion loss is measured from the NT to the TR at 96 kHz with 100 Ω source and load impedances. The maximum insertion loss for each configuration is shown in table 1.

Table 1 — Maximum insertion loss for each configuration

Configuration	Insertion loss at 96 kHz
Point-to-point	6 dB
Extended passive bus	4 dB
Short passive bus	not critical
Y-configuration	not critical

5.3 Longitudinal conversion loss

The longitudinal conversion loss of the cabling shall be equal to, or greater than, 43 dB when measured at 96 kHz.

5.4 Round trip delay

The round trip delay introduced by the cabling shall not exceed:

a) 2,0 µs for the total cabling of both the short passive bus at 96 kHz and the Y-configuration;

b) 0,5 µs differential round trip delay for the cabling between the first and last outlet of the extended passive bus.

These requirements are illustrated in figure 1.

5.5 Power feeding

The length of the cabling may be limited by the cable resistivity, the number of terminals, their power consumption and the capability of the remote power sources.

The loop resistance has to be controlled in order to fulfil the power feeding requirements and to avoid static saturation of inductive components in NT and TEs due to the difference in d.c. resistances of the two wires making up the twisted pair. The d.c. resistance unbalance of the two wires shall not exceed 3 % if the loop resistance is greater than 5 Ω.

In the majority of cases power is supplied via the phantom of the transmit and receive pairs. In this case only two pairs are used. In some applications a third pair is needed for power source 2 and power sink 2.

Copyright International Organization for Standardization
Reproduced by IHS under license with ISO
No reproduction or networking permitted without license from IHS Not for Resale

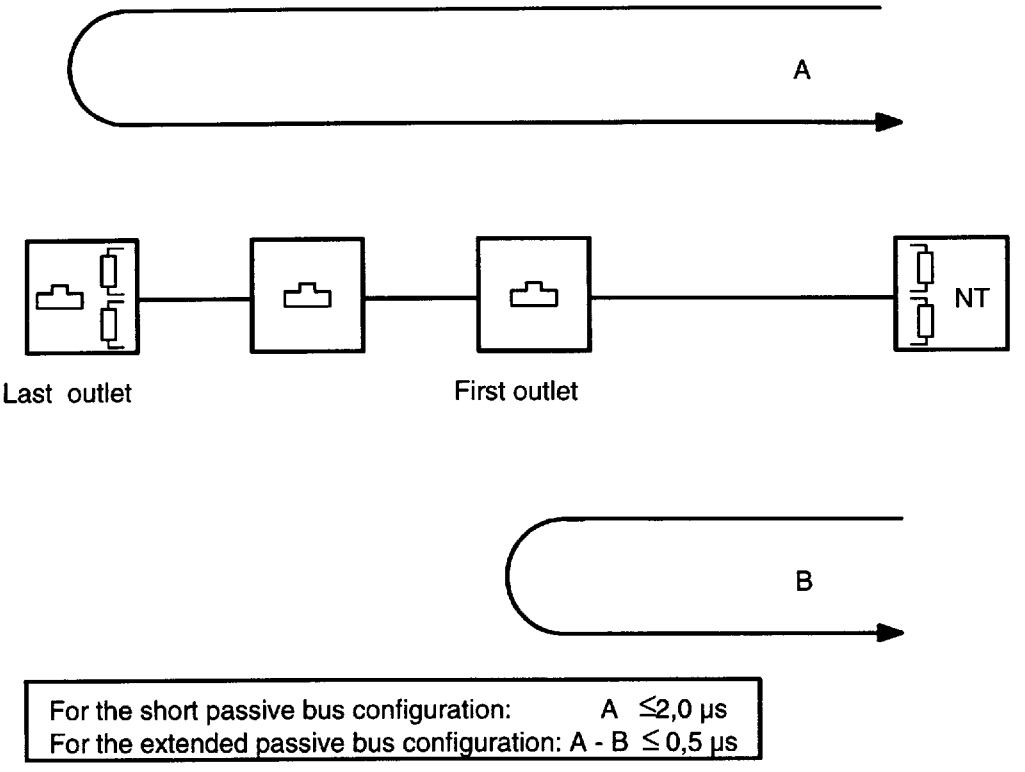

Figure 1 — Round trip delay requirements

5.6 Electromagnetic environment

The ISDN basic access is designed to work in most environments. However, its performance may be degraded by interference from external electromagnetic sources (such as motors) and interference from other transmission systems sharing the same cable.

The impulsive noise generated by, for instance, analogue telephony or unbalanced data interfaces, can cause interference with signals carried on the ISDN cabling.

Crosstalk can be limited by using pairs for ISDN basic rate in separate cables or in separate bundles of pairs in the same cable. Before sharing of ISDN S-bus with other transmission systems in the same cable it shall be verified that they do not interfere with each other.

In noisy environments or adjacent to sensitive equipment, shielded cabling may be advisable. Cables routed outside of buildings may require protection devices. The attenuation and capacitance of protection devices shall be taken into account.

5.7 Spurs

Because spurs will add capacitance to the cabling, they are not recommended. When needed, the length of spurs used for connection of terminal outlets shall not exceed 1 m. The length of a spur used to attach a NT should not exceed 0,5 m.

5.8 Near-end crosstalk loss (NEXT)

The near-end crosstalk loss of the cabling shall be greater than 35 dB at 96 kHz. It is recommended that the NEXT of the cable be greater than 54 dB for satisfactory noise immunity (see 7.2).

6 Configurations

6.1 General

The following design requirements are common to all ISDN basic access user network interface configurations:

a) Where S_0 interfaces can be extended under fallback mode (e.g. when the NT2 is bypassed), further loss and delay will be introduced into the link. The design requirements apply to worst case conditions.

b) The TE may be hardwired to the cable termination. If a TE cord is used it shall comply with ISO/IEC 8877.

Copyright International Organization for Standardization
Reproduced by IHS under license with ISO
No reproduction or networking permitted without license from IHS Not for Resale

c) Terminating resistors (see 7.4) are needed at both ends of the transmit and receive pairs. Locations are shown in figures 2 to 5 and figures 7 to 9.[1)] If a specific configuration requires the terminating resistors at the NT, these terminating resistors shall always be present either within the NT or at the connection point between the NT (cord) and the bus cabling.

d) The NT may be connected to the cabling in three ways:

- hardwired;
- with a outlet integral to the NT;
- via a flexible cord with a plug.

ISO/IEC 8877 and IEC 603-7 may be applied for the case with a connector at the NT. If however hardwiring is used, an outlet complying to ISO/IEC 8877 and IEC 603-7 should be available close to the NT for supervision and maintenance.

Configurations which can be supported within the hierarchical star topology allow the full flexibility of generic cabling to be exploited. When planning configurations, the following should be taken into account:

1) point-to-point configurations including star (see 6.6) can easily be carried out via generic cabling defined in ISO/IEC 11801;

2) short passive bus can not be carried out via generic cabling defined in ISO/IEC 11801. Extended passive bus and Y-configurations can be carried out via generic cabling using adapters in the work area. See 6.7 for implementation over structured cabling systems. Only two B-channels are available for all the possible extension outlets of one single bus. Thus point-to-multipoint configurations can not replace PBX functionality.

6.2 The point-to-point configuration

The point-to-point configuration is illustrated in figure 2.

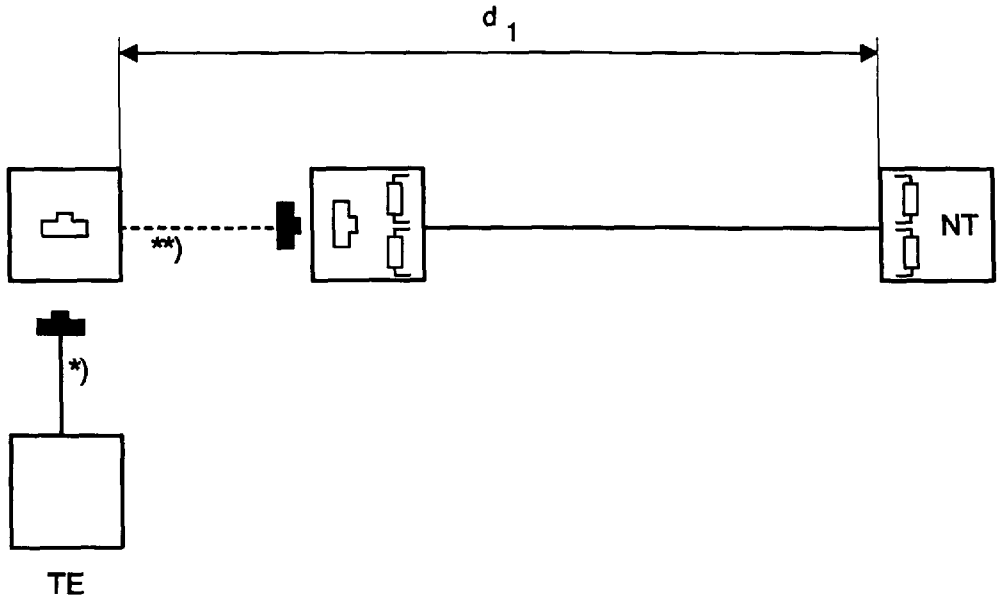

d_1 Total length of cabling from NT to outlet
*) TE connecting cord or integral cord
**) Optional extension cord
Maximum number of outlets: 1
Maximum number of terminals: 1

Figure 2 — Point-to-point configuration

Requirements

For a point-to-point configuration, the insertion loss at 96 kHz shall be less than 6 dB (see 5.2) over the distance d_1 in figure 2. This includes cabling and extension cords if used. Maximum distances can be found in annex B.

---

1) In generic cabling terminating resistors shall be placed external to the TO.

Copyright International Organization for Standardization
Reproduced by IHS under license with ISO
No reproduction or networking permitted without license from IHS
Not for Resale

The length of an optional extension cord shall not exceed 25 m.

It is recommended that the polarity of each wire be maintained throughout the length of the cabling to facilitate testing and more effective cable management.

6.3 The short passive bus configuration

In the short passive bus configuration, outlets for the terminals are distributed at any point along the bus. A typical short passive bus is illustrated in figure 3.

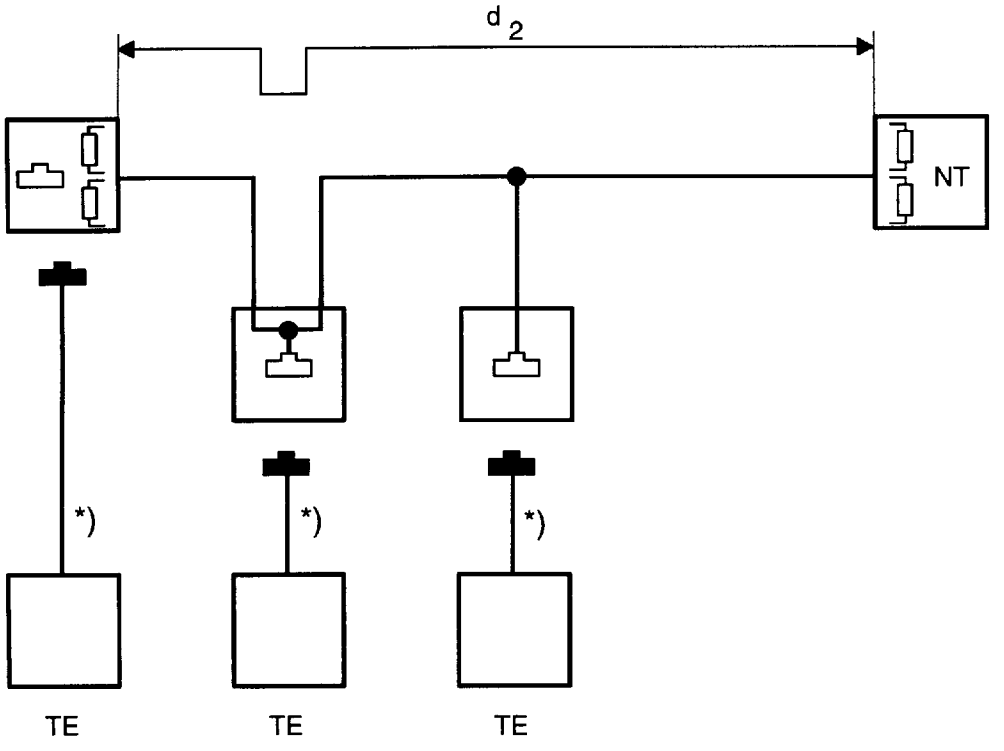

d_2 Total length of cabling from NT to last outlet
*) TE connecting cord or integral cord
Maximum number of outlets: 12
Maximum number of terminals: 8

Figure 3 — Short passive bus

Requirements

The round trip delay requirement for the short passive bus specified in 5.4a) applies to the bus length d_2 in figure 3. Length d_2 is the total length of the cabling between the NT and the last outlet, it does not include the length of spurs. Maximum distances can be found in annex B.

Not more than 8 terminals shall be connected to the short passive bus at any one time. The maximum number of outlets connected directly to the bus is limited to 12, however, no more than 8 shall be attached via spurs.

NOTE: It may be necessary to plan for less than 8 terminals on a short passive bus to meet the anticipated traffic conditions.

It is recommended not to use spurs. However, if they are used they shall not exceed 1 m. A spur shall be terminated with a single outlet.

The polarity of each wire of the twisted pair shall be maintained throughout the bus.

Extension cords shall not be used to extend the TE cord.

6.4 The extended passive bus configuration

Up to 4 TEs are grouped together at the distant end of the bus to the NT.

A typical extended passive bus is illustrated in figure 4.

Copyright International Organization for Standardization
Reproduced by IHS under license with ISO
No reproduction or networking permitted without license from IHS Not for Resale

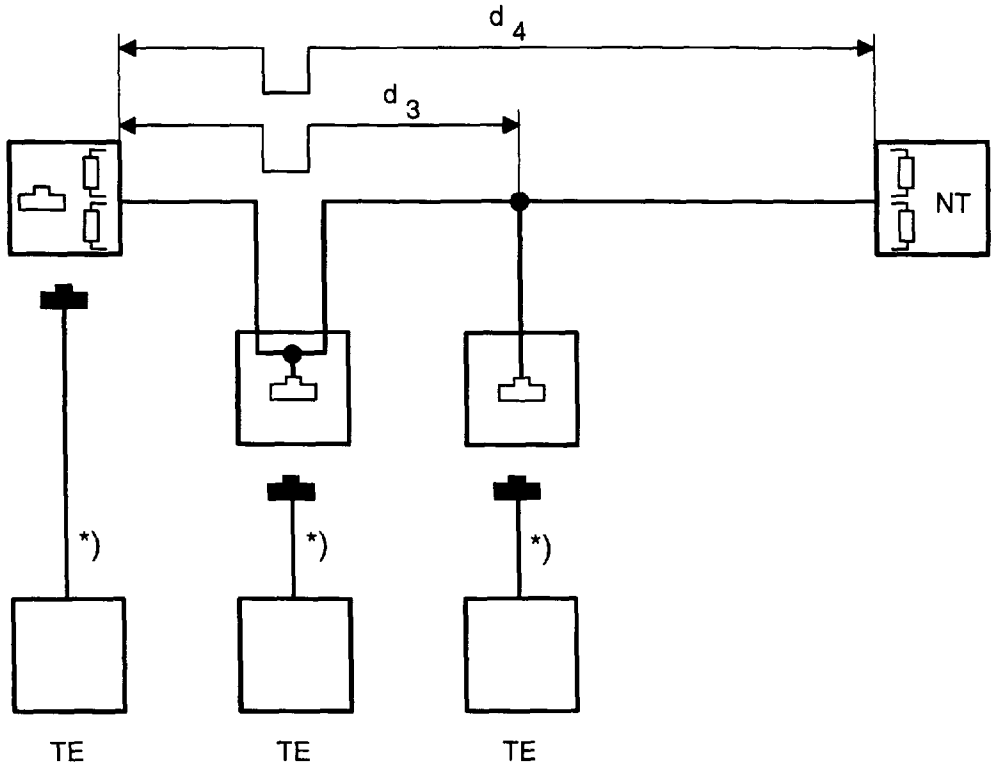

d_3 Length of cabling between first and last outlet
d_4 Length of cabling from NT to last outlet
*) TE connecting cord or integral cord
Maximum number of outlets: 12
Maximum number of terminals: 4

Figure 4 — Extended passive bus

Requirements

The insertion loss requirement for the extended passive bus specified in 5.2 applies to the length d_4 in figure 4. The differential round trip delay requirement for the extended passive bus specified in 5.4b) applies to the length d_3 in figure 4. Maximum distances can be found in annex B.

The number of terminals that may be connected to the bus shall not exceed 4.

NOTE: It may be necessary to plan for less than 4 terminals on an extended passive bus to meet the anticipated traffic conditions.

It is recommended not to use spurs. However, if spurs are present they shall not exceed 1 m.

The polarity of each wire of the twisted pairs shall be maintained throughout the bus.

Extension cords shall not be used to extend the TE cord.

6.5 The Y-configuration

The Y-configuration is illustrated in figure 5.

NOTE: If the NT is equipped with terminating resistors, they may stay.

Copyright International Organization for Standardization
Reproduced by IHS under license with ISO
No reproduction or networking permitted without license from IHS Not for Resale

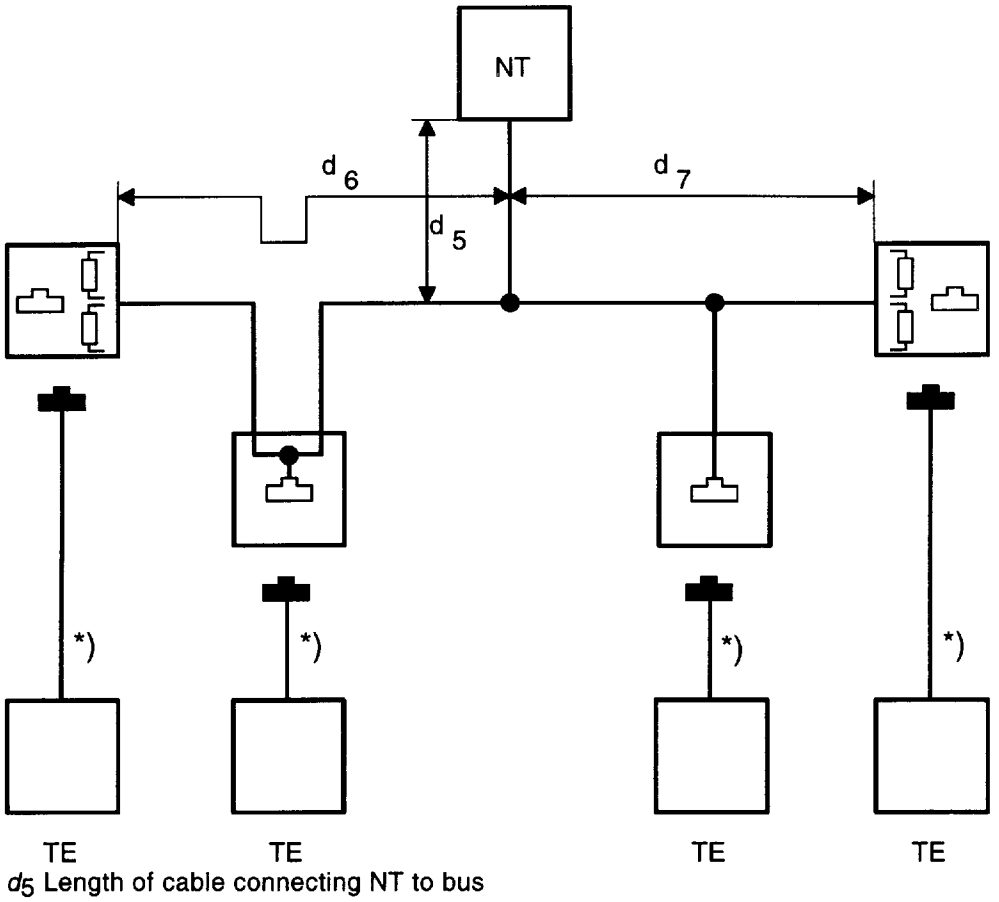

d_5 Length of cable connecting NT to bus
d_6 Total length of arm 1 from last outlet to NT joint to bus
d_7 Total length of arm 2 from last outlet to NT joint to bus
*) TE connecting cord or integral cord
Maximum number of outlets: 12
Maximum number of terminals: 8

Figure 5 — Y-configuration

Requirements

The round trip delay requirement for the Y-configuration specified in 5.4a) applies individually to both bus lengths d_6 and d_7 in figure 5. The maximum distances can be found in annex B.

The total number of terminals connected to the bus shall not exceed 8. The maximum number of outlets connected directly to the bus is 12, however, no more than 8 can be attached via spurs. It is recommended not to use spurs. However, if they are used they shall not exceed 1 m. The length of d_5 shall not exceed 0,5 m.

The polarity of each wire of the twisted pairs shall be maintained throughout the bus.

Extension cords shall not be used to extend the TE cord.

6.6 The star configuration

The star configuration is physically represented by a number of point-to-point configurations connected to a single NT. The number of arms of the star is dependent on the design of the NT. The design requirements are the same as the point-to-point configuration (see clause 5). This configuration is not possible with all designs of NTs.

6.7 Implementation over structured cabling systems

6.7.1 General

The configurations in 6.2 to 6.6 may be constructed via structured cabling systems such as generic cabling systems in accordance with ISO/IEC 11801.

Copyright International Organization for Standardization
Reproduced by IHS under license with ISO
No reproduction or networking permitted without license from IHS
Not for Resale

In generic cabling it is not intended to change the fixed parts of the cabling (e.g. outlets, cables etc.). Terminal cords and terminating resistors should not be hardwired on the outlets; this requires the use of adapters to present the ISDN basic access to the user.

Figure 6 shows the typical hierarchical structure of generic cabling systems. The NT may be located at the campus distributor, building distributor or floor distributor.

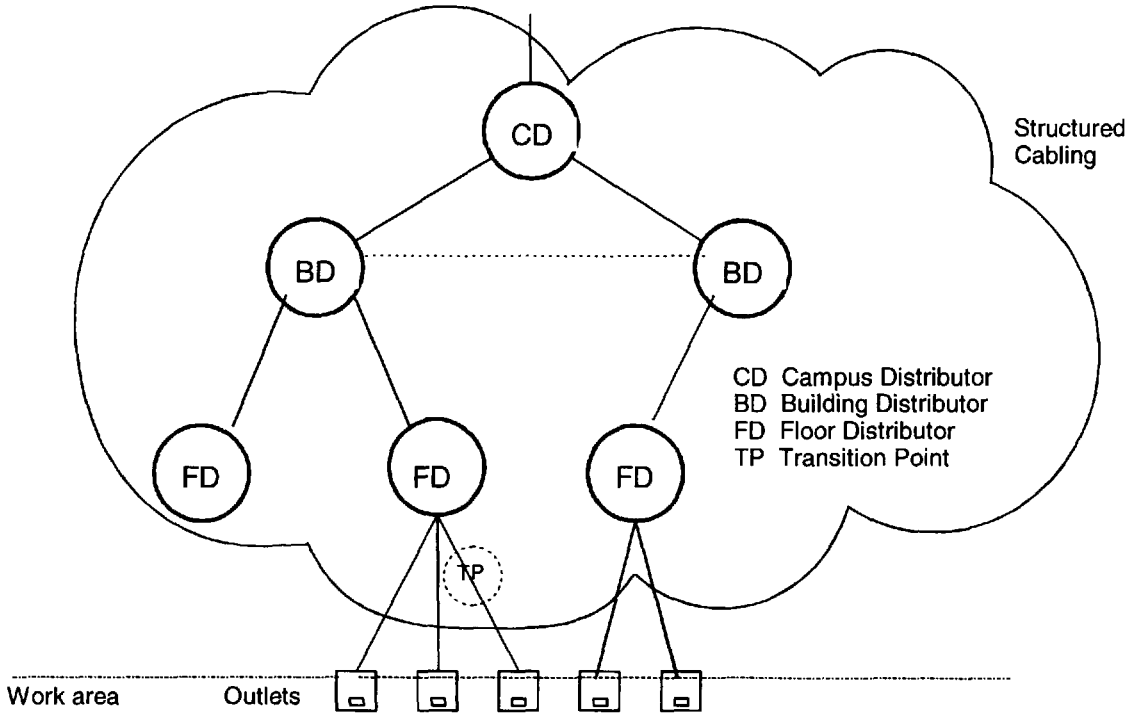

NOTE: Dotted lines denote optional connections, dotted circles denote optional elements. The outlets are as defined in ISO/IEC 11801.

Figure 6 — NT location in the generic cabling structure

6.7.2 ISDN structured cabling adapter

An ISDN structured cabling adapter consists of:

- a plug which matches the outlet of the structured cabling;
- an optional cord of restricted length;
- 1 or up to 8 ISDN outlets;
- terminating resistors (fixed or switched).

Figures 7 and 8 show the use of ISDN structured cabling adapters to provide point-to-point and point-to-multipoint ISDN basic access configurations.

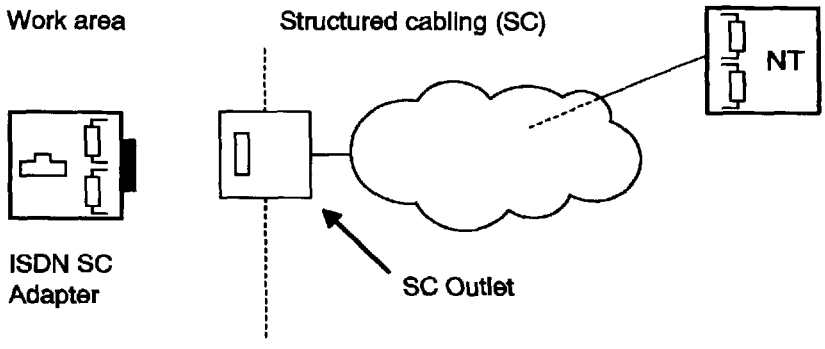

NOTE: The outlets are as defined in ISO/IEC 11801.

Figure 7 — ISDN structured cabling adapter

Copyright International Organization for Standardization
Reproduced by IHS under license with ISO
No reproduction or networking permitted without license from IHS
Not for Resale

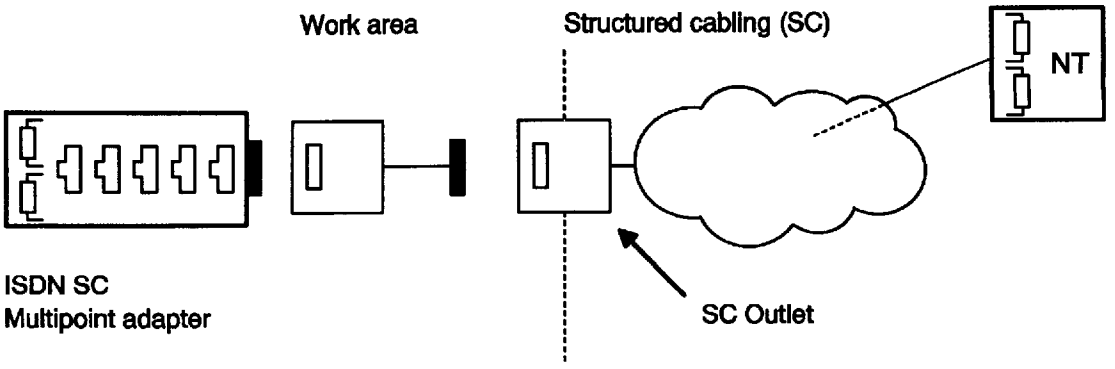

NOTE: The outlets are as defined in ISO/IEC 11801.

Figure 8 — ISDN structured cabling multipoint adapter

6.7.3 Requirements for ISDN structured cabling adapters

The cord shown in the work area of figure 8 is optional. If used, the cord shall conform to the requirements for cables in 7.2 and its length shall not exceed 5 m.

The terminating resistors shall conform to the requirements for terminating resistors in 7.4. An integral switch should be provided to enable terminating resistors to be disconnected when adapters are used in series.

The ISDN outlets shall conform to the requirements for outlets in 7.5.

If more than one outlet is provided in the adapter, the length of cabling between the first and last outlet shall be less than 0,5 m.

6.7.4 Configurations

ISDN structured cabling adapters may be used to construct all the configurations 6.2 to 6.6 provided the configuration requirements of 6.2 to 6.6 and the design requirements of clause 5 are met.

Point-to-multipoint adapters may be connected in series to provide more outlets. When adapters are connected in this way terminating resistors are only required in the final adapter. The terminating resistors shall be removed or switched out in all intermediate adapters. Not more than one multipoint adapter shall be plugged into a multipoint adapter.

Figure 9 illustrates the use of multipoint adapters in series.

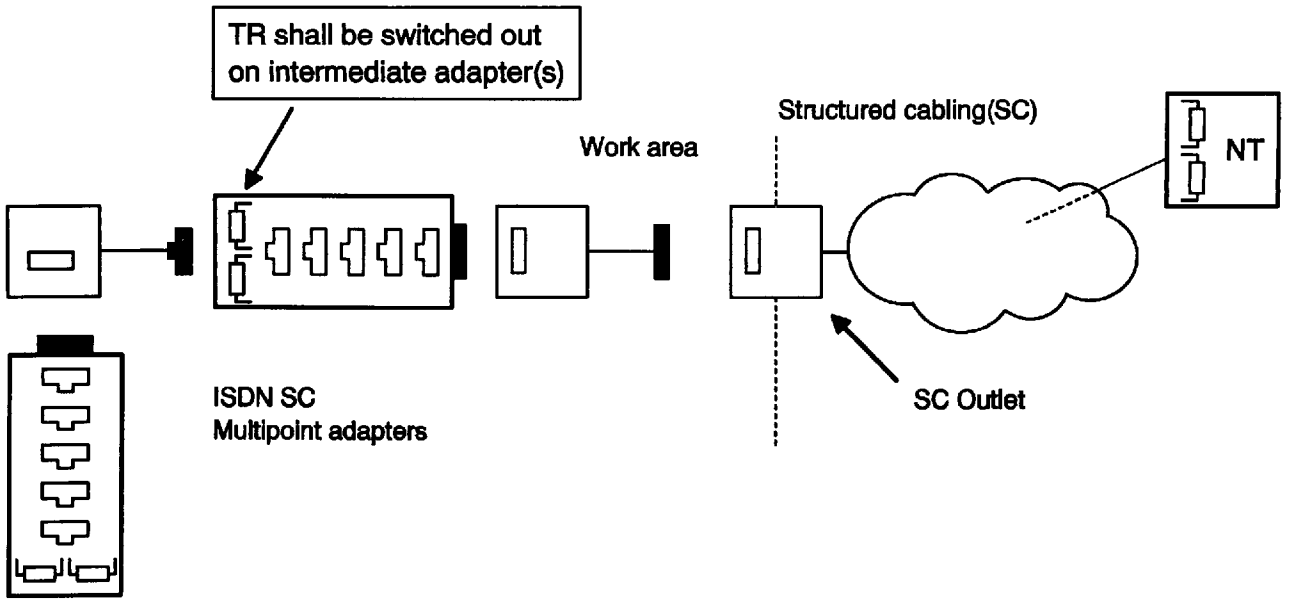

NOTE: The outlets are as defined in ISO/IEC 11801.

Figure 9 — ISDN structured cabling multipoint adapters in series

Copyright International Organization for Standardization
Reproduced by IHS under license with ISO
No reproduction or networking permitted without license from IHS
Not for Resale

Care should be exercised when using the Y configuration described in 6.5. It is possible to disable the configuration if either the adapter of the other leg of the Y is unplugged in the work area or if one leg of the Y is required by the customer to be reconfigured at a cross connect.

7 Minimum requirements for cabling components

7.1 General

The minimum requirements for the components used to implement the ISDN basic access cabling configurations described in clause 6 are outlined in this clause.

If the designer of new cabling would like to use the cabling for other transmission systems the minimum requirements for those systems should also be considered in addition to those below.

NOTE: For further guidance see ISO/IEC 11801.

7.2 Cables

All cables shall be balanced and consist of twisted pairs or quads.

The characteristic impedance of the cable at 96 kHz shall be in the range 75 Ω to 150 Ω. This usually relates to capacitance of the cable between the values 30 nF/km to 120 nF/km.

The difference of d.c. resistance between the two conductors in a pair shall be less than 3% (see 8.5).

Each conductor within the cable shall be insulated from all other conductors within the cable and also from any external potential. The insulation resistance shall be greater than 50 MΩ x km when measured at a temperature of 20 °C at 500 V d.c.

NOTE: For system performance the insulation resistance is not critical. However, an insulation resistance of less than 50 MΩ x km at 500 V will indicate the likely presence of defects.

The longitudinal conversion loss of the cable shall be equal to, or greater than, 43 dB when measured at 96 kHz.

It is recommended to use cables whose NEXT is greater than 54 dB at 96 kHz for a 100 m cable length (see 5.8) for satisfactory noise immunity.

7.3 Terminal cords

Cords used for connection of the TE to the cabling shall conform to the requirements of ISO/IEC 8877. For extension cords see 6.2.

7.4 Terminating resistors

The value of the terminating resistors shall be (100 ± 5) Ω and have a rating equal to or greater than 0,1 Watt.

7.5 Outlets and joint boxes

The outlets for connections at the S reference point or the T reference point shall be in accordance with IEC 603-7. The pin assignments are contained in ISO/IEC 8877 and are shown in table 2.

Copyright International Organization for Standardization
Reproduced by IHS under license with ISO
No reproduction or networking permitted without license from IHS Not for Resale

Table 2 — Pin assignments

Pin	Function		Polarity of power supplies	Polarity of framing pulses
	TE	NT		
1	Power source 3 2)	Power sink 3	+	
2	Power source 3 2)	Power sink 3	-	
3	Transmit power sink 1	Receive Power source 1	+ 1)	+
4	Receive Power sink 1	Transmit Power source 1	- 1)	+
5	Receive Power sink 1	Transmit Power source 1	- 1)	-
6	Transmit Power sink 1	Receive Power source 1	+ 1)	-
7	Power sink 2	Power source 2 2)	-	
8	Power sink 2	Power source 2 2)	+	

1) The d.c. polarity shown in the table refers to the normal power mode. In the restricted power mode the polarity is reversed.

2) Power sources 2 and 3 are optional.

Pairs of wires shall be connected to the following pins: 1 and 2, 3 and 6, 4 and 5, 7 and 8.

Joints can be made at the rear of outlets and so generally joint boxes are not required. Outlets or joint boxes can be used to locate terminating resistors.

Both outlets and joint boxes shall meet the following requirements:

a) An outlet used for the connection of terminals shall conform to IEC 603-7.

b) Connections shall not introduce a resistance exceeding 50 mΩ. The resistance shall not vary in the presence of the type of vibration likely to be encountered.

c) Items that have an identifiable earth connection point, metal case or frame shall have a capacitance between any such part and a conductor of not more that 10 pF. This capacitance shall be substantially similar for the conductors in a pair.

d) The capacitance between any pair of signal carrying conductors shall not be more than 5 pF.

e) Joint boxes used for ISDN shall be clearly distinguishable from those used for power.

7.6 Cross-connect products/patch cords

All cross-connect and patch cord components shall comply with the electrical requirements specified for generic cabling in ISO/IEC 11801.

8 Cabling qualification

8.1 General

A link in compliance with ISO/IEC 11801 class B or better meets the requirements of an S_0 transmission link. For other installations the following should be verified either by design or by direct or indirect measurement to ensure the good operation of an S_0 transmission link:

- correct configuration requirements;
- absence of spurs longer than 1 m;
- continuity and cabling polarity;

Copyright International Organization for Standardization
Reproduced by IHS under license with ISO
No reproduction or networking permitted without license from IHS Not for Resale

- d.c. loop resistance;
- d.c. lead resistance unbalance;
- insulation resistance;
- insertion loss (point-to-point and extended passive bus);
- round trip delay (short passive bus, Y-configuration and extended passive bus);
- characteristic impedance;
- near-end crosstalk loss.

The tests which have to be applied depend to a large extent on of what is known about the installation. For this reason the tests applied to known (e.g. new or recent) installations may be restricted to a simple continuity check whereas an unknown existing installation will require more comprehensive testing. In these cases or where functional problems are encountered, the relevant tests from 8.2 to 8.13 should be applied.

8.2 Spurs

The presence and location of unused spurs can be determined by the use of a time domain reflectometer or a pulse echo meter, where this cannot be done by visual means. Spurs longer than 1 m shall be removed.

8.3 Cabling integrity

Faults which can occur during installation include: open and short circuits, incorrect connections and a terminating resistor which is either missing, should not be present or is of the wrong value. These faults can be detected with simple cable tests.

8.4 D.c. loop resistance

D.c. loop resistance can be used as an indication of cable length where the diameter of the conductors is known. A pair with 0,5 mm diameter copper wire has a loop resistance of approximately 190 Ω/km, a pair with 0,6 mm diameter copper wire has a loop resistance of approximately 122 Ω/km.

8.5 D.c. lead resistance unbalance

The resistance unbalance should be measured and evaluated according to the equation:

$$\Delta R_{AB} = \frac{\left| R_A - R_B \right|}{R_A + R_B} \bullet 100 [\%] \qquad (1)$$

where: R_A , R_B resistance of each conductor in the pair

ΔR_{AB} resistance unbalance.

Twisted pairs shall have a lead resistance unbalance of less than 3%.

8.6 Insulation resistance

The condition of existing cabling will be uncertain. Where cables are suspected to have suffered mechanical damage or have been subjected to a damp environment, an insulation resistance measurement should be made. New cables may have suffered damage during transit or installation and insulation resistance measurement will give an indication of possible damage. An insulation resistance of less than 50 MΩ x km is an indication for such a damage.

The test voltage shall not exceed 50 V to avoid dangerous voltages appearing at unknown points in the network. Bus terminations shall be disconnected for this measurement.

8.7 Insertion loss

Insertion loss should be determined in the point-to-point and extended passive bus configurations. The measurement shall be performed on the cabling from the proposed connection point of the NT and the point proposed as the furthest outlet on the bus. The test shall be performed using 100 Ω source and load resistors. The insertion loss should not exceed the design requirements of 5.2.

Copyright International Organization for Standardization
Reproduced by IHS under license with ISO
No reproduction or networking permitted without license from IHS Not for Resale

8.8 Round trip delay

An accurate measurement of round trip delay requires the use of expensive equipment not always available to an installer.

For all plastic insulated cables this measurement can be replaced by a measurement of the cable length. The maximum propagation time may be assumed to be 7 µs/km (typical value for p.v.c. insulated cables).

If the cable lengths cannot be accurately measured, other insulation materials are used, or a more precise measurement of the propagation time is necessary, this could be carried out using a time domain reflectometer. The round trip delay requirements should not exceed the requirements of 5.4.

8.9 Characteristic impedance

The S_0 interface is designed to function with a wide range of cable characteristic impedances (75 Ω to 150 Ω). It is unlikely that characteristic impedance will be a source of problems because normal twisted pair cables designed for telephony applications fall within this range.

8.10 Near end crosstalk (NEXT) loss

Under consideration.

8.11 Impulsive noise

Under consideration.

8.12 Bit error rates

Under consideration.

8.13 Longitudinal conversion loss

Under consideration

Copyright International Organization for Standardization
Reproduced by IHS under license with ISO
No reproduction or networking permitted without license from IHS Not for Resale

Annex A

(informative)

Bibliography

IEC 950:1991, including Amendment 1:1992, Amendment 2: 1993, Amendment 3: 1995, Amendment 4: 1996	*Safety of information technology equipment.*
IEC 1000-4, including Amendment 1:1992, Amendment 2: 1993, Amendment 3: 1995, Amendment 4: 1996	*Electromagnetic compatibility (EMC) — Part 4: Testing and measurement techniques.*
IEC 1000-4-2:1995,	*Part 4: Testing and measurement techniques - Section 2: - Electrostatic discharge immunity test - Basic EMC Publication.*
IEC 1000-4-3:1995,	*Part 4: Testing and measurement techniques - Section 3: Radiated, radio-frequency, electromagnetic field immunity test.*
IEC 1000-4-4:1995,	*Part 4: Testing and measurement techniques - Section 4: Electrical fast transient/burst immunity test - Basic EMC publication.*
IEC 1000-4-5:1995,	*Part 4: Testing and measurement techniques - Section 5: Surge immunity tests.*
IEC 1000-4-6:1996,	*Part 4: Testing and measurement techniques - Section 6: Immunity to conducted disturbances, induced by radio-frequency fields.*
CISPR 22:1993,	*Limits and methods of measurement of radio disturbance characteristics of information technology equipment.*
ETS 300 012,	*Integrated Services Digital Network (ISDN); Basic user-network interface; Layer 1 specification and test principles.*
ETS 300 047-1,	*Integrated Services Digital Network (ISDN); Basic access - safety and protection Part 1: General.*
ETS 300 047-3,	*Integrated Services Digital Network (ISDN); Basic access - safety and protection Part 3: Interface Ia - protection.*
ETS 300 047-5,	*Integrated Services Digital Network (ISDN); Basic access - safety and protection Part 5: Interface Ib - protection.*

Copyright International Organization for Standardization
Reproduced by IHS under license with ISO
No reproduction or networking permitted without license from IHS Not for Resale

Annex B

(informative)

Examples of maximum distances for specific common cables

Table B.1 gives examples of distances which can be achieved with cables presently used in different countries. The inclusion of a cable in this list neither implies a recommendation for a specific cable nor excludes the use of others. Suppliers of cables not listed are encouraged to provide the distances reached in accordance with the design criteria in clause 5. The lengths below do not take into account power feeding limitations. Recommended maximum distances for installations using cables which meet the requirements of ISO/IEC 11801 are for further study (FFS).

Table B.1 — Examples of recommended maximum distances for typical installations

No.	Cable type	d_1 m	d_2 m	d_3 m	d_4 m	d_5 m	d_6 m	d_7 m	Source of specification
1	0,5 mm CW1308	400	100	45	250	FFS [4]	FFS	FFS	United Kingdom
2	0,5 mm CW1700	800	150	70	400	FFS	FFS	FFS	United Kingdom
3	0,5 mm CW1750	800	150	70	400	FFS	FFS	FFS	United Kingdom
4	J-Y(ST)Y 2x2x0,6	600 [1]	120 [1]	25 [2]	450	FFS	FFS	FFS	Germany
5	J-Y(ST)Y≥10x2x0,6	700 [1]	130 [1]	27 [2]	495	FFS	FFS	FFS	Germany
6	J-2Y(ST)Y 2x2x0,6 ST III BD	900 [1]	180 [1]	35 [2]	615	FFS	FFS	FFS	Germany
7	J-2Y(ST)Y≥10x2x0,6 ST III BD	1000 [1]	180 [1]	35 [2]	615	FFS	FFS	FFS	Germany
8	J-02YSH 2..10x2x0,6 ST II BD [3]	1000 [1]	200 [1]	43 [2]	750	FFS	FFS	FFS	Germany
9	J-2Y(ST)CH 2x2x0,6 ST VI BD	920 [1]	180 [1]	39 [2]	690	FFS	FFS	FFS	Germany
10	278-4-6 [3] (4 pairs; 0,6 mm)	800	130	30	500	0,5	90	90	France
11	L120 (4 pairs; 0,6 mm)	1000	150	50	500	0,5	90	90	France
12	Cat. 3: 0,4 mm; 4 pairs; 2 pairs	350	150	50	200	FFS	FFS	FFS	Japan
13	Cat. 3: 0,5 mm; 4 pairs; 2 pairs	550	150	50	350	FFS	FFS	FFS	Japan
14	Cat. 3: 0,65 mm, 4 pairs; 2 pairs	750	150	50	550	FFS	FFS	FFS	Japan

1) Worst case calculations.
2) Theoretical values.
3) This cable is not recommended in cases where the use of primary access is envisaged.
4) For further study (FFS).

Copyright International Organization for Standardization
Reproduced by IHS under license with ISO
No reproduction or networking permitted without license from IHS
Not for Resale

© ISO/IEC

ICS 33.080; 35.200

Descriptors: data processing, information interchange, telecommunications, ISDN, public network, buildings, premises, communication cables, cabling, specifications.

Price based on 16 pages

Copyright International Organization for Standardization
Reproduced by IHS under license with ISO
No reproduction or networking permitted without license from IHS

Not for Resale