INTERNATIONAL STANDARD

ISO/IEC 14474

First edition
1998-12-15

Information technology — Telecommunications and information exchange between systems — Private Integrated Services Network — Functional requirements for static circuit-mode inter-PINX connections

Technologies de l'information — Télécommunications et échange d'information entre systèmes — Réseau privé à intégration de services — Exigences fonctionnelles pour les connexions inter-PINX en mode circuit statique

Reference number
ISO/IEC 14474:1998(E)

Copyright International Organization for Standardization
Provided by IHS under license with ISO
No reproduction or networking permitted without license from IHS

Not for Resale

Foreword

ISO (the International Organization for Standardization) and IEC (the International Electrotechnical Commission) form the specialized system for worldwide standardization. National bodies that are members of ISO or IEC participate in the development of International Standards through technical committees established by the respective organization to deal with particular fields of technical activity. ISO and IEC technical committees collaborate in fields of mutual interest. Other international organizations, governmental and non-governmental, in liaison with ISO and IEC, also take part in the work.

In the field of information technology, ISO and IEC have established a joint technical committee, ISO/IEC JTC 1. Draft International Standards adopted by the joint technical committee are circulated to national bodies for voting. Publication as an International Standard requires approval by at least 75 % of the national bodies casting a vote.

International Standard ISO/IEC 14474 was prepared by Joint Technical Committee ISO/IEC JTC 1, *Information technology*, Subcommittee SC 6, *Telecommunications and information exchange between systems.*

Annex A forms an integral part of this International Standard.

© ISO/IEC 1998

All rights reserved. Unless otherwise specified, no part of this publication may be reproduced or utilized in any form or by any means, electronic or mechanical, including photocopying and microfilm, without permission in writing from the publisher.

ISO/IEC Copyright Office • Case postale 56 • CH-1211 Genève 20 • Switzerland

Printed in Switzerland

Copyright International Organization for Standardization
Provided by IHS under license with ISO
No reproduction or networking permitted without license from IHS Not for Resale

Information technology — Telecommunications and information exchange between systems — Private Integrated Services Network — Functional requirements for static circuit-mode inter-PINX connections

1. Scope

This International Standard is a part of the functional requirements for the Private Integrated Services Network (PISN) and defines the functions and procedures that are required by Private Integrated Services Network exchanges (PINXs) and the intervening network (IVN) in order to establish Inter-PINX Connections (IPC). The IPC is used for the transfer of signalling and user information between PINXs.

The Private Signalling System No.1 (PSS1) as defined in ISO/IEC 11572 and 11574 defines the signalling procedures and protocol for call control between PINXs at the Q reference point. These procedures are independent of the types of IVNs, called scenarios used to interconnect the PINXs. ISO/IEC TR14475 describes the use of various types of IVNs which provide the interconnections of PINXs.

In order to connect a PINX to another PINX, mapping functions are required to adapt the specific interfaces at the C reference point to the application at the Q reference point. As such, mapping functions provide for physical adaptation to the interface at the C reference point. Mapping functions also provide for the mapping of user channels and signalling information at the Q reference point to the appropriate channels or time-slots at the C reference point. The C and Q reference points are defined in ISO/IEC 11579-1.

The types of interfaces at the C reference point covered by this International Standard are:

[1] 1544 kbit/s unstructured digital leased line

[2] 1544 kbit/s structured digital leased line

[3] 2048 kbit/s unstructured digital leased line

[4] 2048 kbit/s structured digital leased line

[5] 64 kbit/s unrestricted digital leased line

[6] 1544 kbit/s ISDN Primary Rate user-network layer 1 interface

[7] 2048 kbit/s ISDN Primary Rate user-network layer 1 interface

[8] ISDN Basic Rate user-network layer 1 interface

At the Q reference point the mappings provide a 64 kbit/s service for user channels and a packet mode service for the signalling channel. The applied mapping is a static mapping, i.e. there is a fixed relationship between user and signalling channels at the Q reference point and the timeslots of the interface at the C reference point. Any changes are subject to administrative actions.

This International Standard specifies PINX mapping functions between the Q reference point and the C reference point for IVNs which provide either dedicated or semi-permanent, non-user activation, circuit-mode IPCs. The dedicated IPC is the connection permanently established, usually for the duration of a contractual period. The semi-permanent IPC is the connection whose resources are reserved for specified times during a contractual period. The semi-permanent IPC is established by management control with or without user activations. In this International Standard, the semi-permanent IPC established by management control with user activation is outside the scope.

The IVN can be a dedicated physical link, dedicated transmission system or a cross connect system, or semi-permanent connection system. IVNs which include inverse mulitlexer techniques (e.g. channel aggregation in accordance with ISO/IEC 13871) are covered by this International Standard so far as they support one of the interfaces listed above.

This International Standard also specifies mapping information. At both sides of the PINX, mapping information is required to administer the scenarios.

This International Standard is applicable to PINXs which can be interconnected to form a Private Integrated Services Network (PISN) and which support signalling protocols at the Q reference point.

Copyright International Organization for Standardization
Provided by IHS under license with ISO
No reproduction or networking permitted without license from IHS Not for Resale

2. Conformance

In order to conform to this International Standard, a PINX shall satisfy the requirements identified in the Protocol Implementation Conformance Statement (PICS) proforma in annex A.

3. Normative References

The following standards contain provisions which, through reference in this text, constitute provisions of this International Standard. At the time of publication, the editions indicated were valid. All standards are subject to revision, and parties to agreements based on this International Standard are encouraged to investigate the possibility of applying the most recent editions of the standards indicated below. Members of IEC and ISO maintain registers of currently valid International Standards.

[1] ISO/IEC 11579-1:1994, *Information technology — Telecommunications and information exchange between systems — Private integrated services network — Part1: Reference configuration for PISN Exchanges (PINX).*

[2] ISO/IEC TR 14475:1996, *Information technology — Telecommunications and information exchange between systems — Private Integrated Services Network — Architecture and Scenarios for Private Integrated Services Networking*.

[3] ISO/IEC 11572:1997, *Information technology — Telecommunications and information exchange between systems — Private Integrated Services Network — Circuit mode bearer services — Inter-exchange signalling procedures and protocol*.

[4] ISO/IEC 11574:1994, *Information technology — Telecommunications and information exchange between systems — Private Integrated Services Network — Circuit-mode 64 kbit/s bearer services — Service description, functional capabilities and information flows*.

[5] ITU-T Rec.G.703 (1991), *Physical/electrical characteristics of hierarchical digital interface*.

[6] ITU-T Rec.G.704 (1995), *Synchronous frame structures used at primary and secondary hierarchical levels*.

[7] ITU-T Rec.G.706 (1991), *Frame alignment and cyclic redundancy check (CRC) procedures relating to basic frame structures defined in Recommendation G.704.*

[8] ITU-T Rec.I.431 (1993), *Primary rate user-network interface — Layer 1 specification*.

[9] ITU-T Rec.I.430 (1995), *Basic rate user-network interface — Layer 1 specification.*

[10] ITU-T Rec.I.412 (1988), *ISDN user-network interfaces — Interface structures and access capabilities*.

[11] ITU-T Rec.I.140 (1993), *Attribute Technique for the characterization of Telecommunication Services supported by an ISDN and Network Capabilities of an ISDN*.

[12] ITU-T Rec.I.210 (1993), *Principles of Telecommunication Services Supported by and ISDN and the Means to describe them.*

[13] ITU-T Rec.Q.921 (1993), *ISDN User-Network Interface — Layer 2 specification*.

[14] ISO/IEC 2382-36:—[1)], *Information technology — Vocabulary — Part 36: Private Integrated Services Network.*

[15] ISO/IEC 13871:1995, *Information technology — Telecommunications and information exchange between systems — Private telecommunications networks — Digital channel aggregation.*

1) To be published.

Copyright International Organization for Standardization
Provided by IHS under license with ISO
No reproduction or networking permitted without license from IHS Not for Resale

4. Definitions

For the purposes of this International Standard, the following definitions apply.

4.1 External definitions

- PISN (Private Integrated Services Network) [14]
- PINX (Private Integrated Services Network Exchange) [14]
- IVN (Intervening Network) [14]
- SW (Switching Functional grouping) [1]
- MP (Mapping Functional grouping) [1]
- Q Reference Point [1]
- C Reference Point [1]
- IPC (Inter-PINX Connection) [14]
- IPL (Inter-PINX Link) [14]

4.2 Specific Definitions

4.2.1 Channel

A means of bi-directional transmission of user or signalling information between two points.

4.2.1.1 Dq channel

A channel used to convey signalling information including call control information between the Q reference points of two peer PINXs.

4.2.1.2 Uq channel

A channel used to convey user information between the Q reference points of two PINXs.

4.2.2 Signalling Functions

4.2.2.1 QSIG (Signalling information flow at the Q reference point)

The generic term describing the signalling information flows (i.e. not a specific signalling protocol), within a Dq channel.

4.2.2.2 CSIG (Signalling information flow at the C reference point)

The generic term describing access signalling information flows (i.e. not a specific signalling protocol), between a PINX and an IVN, at the C reference point.

4.3 Symbols and Abbreviations

- B Timeslot providing of 64 kbit/s bearer capability
- C C Reference Point
- Dq Dq channel
- IPC Inter-PINX Connection
- IVN Intervening Network
- MP Mapping Functional grouping
- PINX Private Integrated Services Network Exchange
- Q Q Reference Point
- QAB Indicates a Q reference point that is associated with the interconnection between PINX A and B
- QAC Indicates a Q reference point that is associated with the interconnection between PINX A and C.
- SW Switching Functional grouping
- Uq Uq channel

Copyright International Organization for Standardization
Provided by IHS under license with ISO
No reproduction or networking permitted without license from IHS Not for Resale

5. Introduction

For the concept of mapping function reference is made to ISO/IEC TR 14475[2].

5.1 Type of IVN

The IVNs supporting permanent circuit-mode IPCs are as follows:

- ☐ Dedicated Transmission System
- ☐ Semi Permanently established channels of circuit-mode network

5.1.1 Dedicated Transmission System

The IPC is provided by a transmission mechanism. The IPC is established by management, see Figure 5.1.

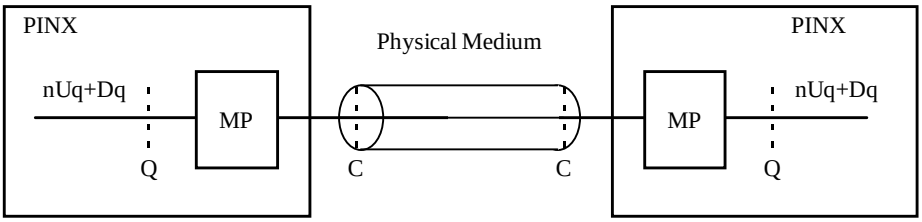

Figure 5.1 — Dedicated Physical medium

The transmission Medium can provide unstructured or channelized bitstream.

5.1.2 Semi-Permanent Connection

The dedicated or the semi-permanent IPCs are provided by a semi-permanent circuit-mode mechanism in the intervening network, in which the IPCs are permanently established by management control with or without user activation. The channels on an IPC (signalling and user information channels between associated two PINXs) at the Q reference point are mapped onto preassigned timeslots providing of 64 kbit/s bearer capability of the IVN access at the C reference point.

This scenario provides multiple IPCs leading to different PINXs.

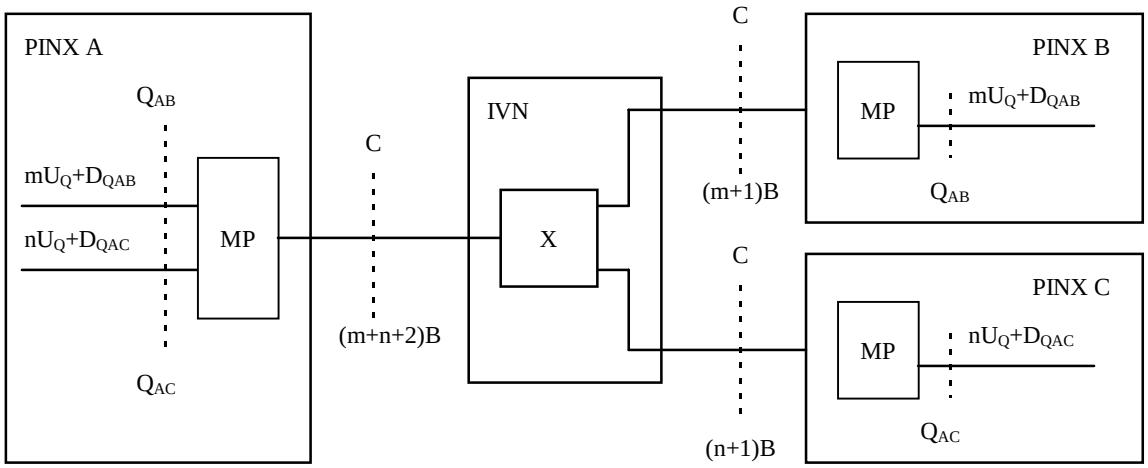

Figure 5.2 — Semi-permanent Connection

5.2 IVN Interface types

The Table 1 shows the categorization of the scenario type of permanent circuit-mode inter-PINX connections. It categorizes the IVN types in terms of the characteristics of the digital leased line for the provision of IPC. IVN interface types are only standardized in certain regions. The international availability of the full bit stream is outside the scope of this International Standard.

--`,,```,,,,````-`-`,,`,,`,`,,`---
Copyright International Organization for Standardization
Provided by IHS under license with ISO
No reproduction or networking permitted without license from IHS
Not for Resale

Table 5.1 — IVN Interface Types

	IVN Interface Types	Structurization	Note
1	Unstructured 1544 kbit/s digital leased line	-	
2	Structured 1544 kbit/s digital leased line	1536 kbit/s timeslots	Note 1
3	Structured 1544 kbit/s digital leased line	24 x 64 kbit/s timeslots	Note 3
4	Unstructured 2048 kbit/s digital leased line	1984 kbit/s timeslots	
5	Structured 2048 kbit/s digital leased line	1984 kbit/s timeslots	Note 2
6	Structured 2048 kbit/s digital leased line	31 x 64 kbit/s timeslots	Note 3
7	64 kbit/s digital leased line	64 kbit/s timeslot	
8	ISDN1544kbit/s Primary Rate Interface	According to ITU-T Rec.I.431	
9	ISDN 2048kbit/s Primary Rate Interface	According to ITU-T Rec.I.431	
10	ISDN Basic Rate Interface	According to ITU-T Rec.I.430	

Note 1:

This type of leased line that is used to interconnect PINXs is a digital transmission link providing primary rate (1544 kbit/s) capability. In this mapping type, the derived channel at the Q reference point shall be mapped onto the time slot the information transfer rate of which is at 64 kbit/s without alteration between the PINXs.

Note 2:

In Europe and Australia it is possible to get 2048 kbit/s leased lines in two different ways. Alternative 1 is unstructured version, which provides unstructured bit stream at 2048 kbit/s (there is no channelisation). Alternative 2 is a channelized version in which time slot 0 is not necessarily transparent. Normally however the leased line offers the remaining 31 channels so that they can be used as 1984 kbit/s or as 31 x 64 kbit/s.

For the case of an unstructured leased line, it should be considered as one IPC at 2048 kbit/s. One possible mapping is to map it to 31 x 64 kbit/s channels. For the structured case especially when used with a cross connect the interface should be considered as providing 31 IPCs cash at 64 kbit/s.

Note 3:

It is a make of subscription, while all 64 kbit/s timeslots are though connected end-to-end. Timeslot sequence integrity is guranteed.

5.3 IPC Bearer Capabilities

IPC Bearer Capabilities depend on IVN Interface describing in the table below.

In each IVN types, the bearer capabilities shall be the assume in both PINXs for any given channel at the Q reference point. While, as a default solution, the bearer capabilities of any given channel at the Q reference point may be the same as provided by the IVN, the channels offered to the Q reference point can have deferent bearer capabilities provided by the IVN. The bearer modification function allows for conditioning the bearer capabilities provided by the IVN, depending on the bearer capabilities desired at the Q reference point. This bearer modification function is outside the scope of this International Standard.

Copyright International Organization for Standardization
Provided by IHS under license with ISO
No reproduction or networking permitted without license from IHS Not for Resale

Table 5.2 — IPC Bearer Capabilities (Structured 1544 kbit/s)

	Attribute	Attribute Values	Note
1	IPC Information Transfer Mode	Circuit	
2	IPC Information Transfer Rate	-	
3	IPC Bearer Capability	Unrestricted digital information	
4	Establishment of Connection	Semi-Permanent Permanent	
5	Symmetry	Bi-directional symmetric	
6	Connection Configuration	Point-to-Point	
7	Structure	8 kHz integrity Time slot sequence integrity	Note 2
8	Channel Type	Not Applicable	
9	Connection Control Protocol Information Transfer Coding	Not Applicable	Note 1

Note 1:

While coding for speech and 3.1 kHz audio are given as a route attribute, it is the responsibility of PISN users to ensure that a compatible encoding scheme such as A/m low coding. PISN users should also recognize no network provision can be made for control of echo and loss.

Note 2:

There are cases the IVNs may use processing technique appropriate for speech such as analogue transmission, echo cancellation and low bit rate voice encoding, hence the bit integrity is not assured.

Table 5.3 — IPC Bearer Capabilities (Structured 1544 kbit/s, 1536 kbit/s timeslots)

	Attribute	Attribute Values	Note
1	IPC Information Transfer Mode	Circuit	
2	IPC Information Transfer Rate	1536 kbit/s	
3	IPC Bearer Capability	Unrestricted digital information	
4	Establishment of Connection	Semi-Permanent Permanent	
5	Symmetry	Bi-directional symmetric	
6	Connection Configuration	Point-to-Point	
7	Structure	8 kHz integrity Time slot sequence integrity	Note 2
8	Channel Type	Not Applicable	
9	Connection Control Protocol Information Transfer Coding	Not Applicable	Note 1

Note 1:

While coding for speech and 3.1 kHz audio are given as a route attribute, it is the responsibility of PISN users to ensure that a compatible encoding scheme such as A/m low coding. PISN users should also recognize no network provision can be made for control of echo and loss.

Note 2:

There are cases the IVNs may use processing technique appropriate for speech such as analogue transmission, echo cancellation and low bit rate voice encoding, hence the bit integrity is not assured.

Copyright International Organization for Standardization
Provided by IHS under license with ISO
No reproduction or networking permitted without license from IHS Not for Resale

Table 5.4 — IPC Bearer Capabilities (Structured 1544 kbit/s, 24 x 64 kbit/s channels)

	Attribute	Attribute Values	Note
1	IPC Information Transfer Mode	Circuit	
2	IPC Information Transfer Rate	1536 kbit/s	
3	IPC Bearer Capability	Unrestricted digital information	
4	Establishment of Connection	Semi-Permanent Permanent	
5	Symmetry	Bi-directional symmetric	
6	Connection Configuration	Point-to-Point	
7	Structure	8 kHz integrity Time slot sequence integrity	
8	Channel Type	Not Applicable	
9	Connection Control Protocol Information Transfer Coding	Not Applicable	

Table 5.5 — IPC Bearer Capabilities (Unstructured 2048 kbit/s, 1984 kbit/s timeslots)

	Attribute	Attribute Values	Note
1	IPC Information Transfer Mode	Circuit	
2	IPC Information Transfer Rate	1984 kbit/s	
3	IPC Bearer Capability	Unrestricted digital information	
4	Establishment of Connection	Semi-Permanent Permanent	
5	Symmetry	Bi-directional symmetric	
6	Connection Configuration	Point-to-Point	
7	Structure	8 kHz integrity Time slot sequence integrity	
8	Channel Type	Not Applicable	
9	Connection Control Protocol Information Transfer Coding	Not Applicable	

Copyright International Organization for Standardization
Provided by IHS under license with ISO
No reproduction or networking permitted without license from IHS Not for Resale

Table 5.6 — IPC Bearer Capabilities (Structured 2048 kbit/s, 1984 kbit/s timeslots)

	Attribute	Attribute Values	Note
1	IPC Information Transfer Mode	Circuit	
2	IPC Information Transfer Rate	1984 kbit/s	
3	IPC Bearer Capability	Unrestricted digital information	
4	Establishment of Connection	Semi-Permanent Permanent	
5	Symmetry	Bi-directional symmetric	
6	Connection Configuration	Point-to-Point	
7	Structure	8 kHz integrity Time slot sequence integrity	
8	Channel Type	Not Applicable	
9	Connection Control Protocol Information Transfer Coding	Not Applicable	

Table 5.7 — IPC Bearer Capabilities (Structured 2048 kbit/s, 31 x 64 kbit/s timeslots)

	Attribute	Attribute Values	Note
1	IPC Information Transfer Mode	Circuit	
2	IPC Information Transfer Rate	N x 64 kbit/s	
3	IPC Bearer Capability	Unrestricted digital information	
4	Establishment of Connection	Semi-Permanent Permanent	
5	Symmetry	Bi-directional symmetric	
6	Connection Configuration	Point-to-Point Point-to-Multipoint	
7	Structure	8 kHz integrity Time slot sequence integrity	
8	Channel Type	Not Applicable	
9	Connection Control Protocol Information Transfer Coding	Not Applicable	

Copyright International Organization for Standardization
Provided by IHS under license with ISO
No reproduction or networking permitted without license from IHS Not for Resale

Table 5.8 — IPC Bearer Capabilities (64 kbit/s, 64 kbit/s timeslot)

	Attribute	Attribute Values	Note
1	IPC Information Transfer Mode	Circuit	
2	IPC Information Transfer Rate	64 kbit/s	
3	IPC Bearer Capability	Unrestricted digital information	
4	Establishment of Connection	Semi-Permanent Permanent	
5	Symmetry	Bi-directional symmetric	
6	Connection Configuration	Point-to-Point	
7	Structure	8 kHz integrity Time slot sequence integrity	
8	Channel Type	Not Applicable	
9	Connection Control Protocol Information Transfer Coding	Not Applicable	

Table 5.9 — IPC Bearer Capabilities (ISDN 1544 kbit/s Primary Rate User-Network Layer 1 Interface)

	Attribute	Attribute Values	Note
1	IPC Information Transfer Mode	Circuit	
2	IPC Information Transfer Rate	64 kbit/s	up to 24 IPCs
3	IPC Bearer Capability	Unrestricted digital information	e.g. unrestricted digital speech
4	Establishment of Connection	Semi-Permanent Permanent	
5	Symmetry	Bi-directional symmetric	
6	Connection Configuration	Point-to-Point	
7	Structure	8 kHz integrity Time slot sequence integrity	
8	Channel Type	Not Applicable	
9	Connection Control Protocol Information Transfer Coding	Not Applicable	

Copyright International Organization for Standardization
Provided by IHS under license with ISO
No reproduction or networking permitted without license from IHS Not for Resale

Table 5.10 — IPC Bearer Capabilities (ISDN 2048 kbit/s Primary Rate User-Network Layer 1 Interface)

	Attribute	Attribute Values	Note
1	IPC Information Transfer Mode	Circuit	
2	IPC Information Transfer Rate	64 kbit/s	up to 31 IPCs
3	IPC Bearer Capability	Unrestricted digital information	e.g. unrestricted digital speech
4	Establishment of Connection	Semi-Permanent Permanent	
5	Symmetry	Bi-directional symmetric	
6	Connection Configuration	Point-to-Point	
7	Structure	8 kHz integrity Time slot sequence integrity	
8	Channel Type	Not Applicable	
9	Connection Control Protocol Information Transfer Coding	Not Applicable	

Table 5.11 — IPC Bearer Capabilities (ISDN Basic Rate User-Network Layer 1 Interface)

	Attribute	Attribute Values	Note
1	IPC Information Transfer Mode	Circuit	
2	IPC Information Transfer Rate	Note 1	
3	IPC Bearer Capability	Note 1	
4	Establishment of Connection	Semi-Permanent Permanent	
5	Symmetry	Bi-directional symmetric	
6	Connection Configuration	Point-to-Point	
7	Structure	8 kHz integrity Time slot sequence integrity	
8	Channel Type	Not Applicable	
9	Connection Control Protocol Information Transfer Coding	Not Applicable	

Note 1:

When the IVN supports the D-channel end-to-end then 3 IPCs are provided at the C reference point.

One IPC has the following attribute values;

- Information Transfer Tate : 16 kbit/s
- Transfer Capability : unrestricted digital information

Two IPCs have the following attribute values;

- Information Transfer Rate : 64 kbit/s
- Transfer Capability : according to subscription

When the IVN does not support the D-channel end-to-end then 2 IPCs are provided at the C reference point with the following attribute values;

- Information Transfer Rate : 64 kbit/s
- Transfer Capability : according to subscription

Copyright International Organization for Standardization
Provided by IHS under license with ISO
No reproduction or networking permitted without license from IHS Not for Resale

6. Mapping Functions

6.1 Physical Adaptation

This section specifies the physical termination of the IVN interfaces.

6.1.1 Unstructured 1554 kbit/s Digital Leased Line

The IVN provides structured bit stream at 1544 kbit/s with no channelisation at the physical interface. The transmission at the physical layer is provided by the transmission system operation at the rate of 1544 kbit/s.

The mapping functions shall be able to provide the followings in accordance with ITU-T Recommendations:

ITU-T Rec.G.704 shall be applied to the definition of the frame structure at the interface of 1544 kbit/s, including the frame format at the interface. The physical adaptation of the mapping function shall be able to provide a 8 kHz frame structure in accordance with ITU-T Rec.G.704, clauses 2.1.1 and 2.1.3.

ITU-T Rec.G.706, clauses 2.1.1 and 2.1.2 shall be applied to the definition of the frame alignment procedures at the interface of 1544 kbit/s.

ITU-T Rec.G.703, clause 2 shall be applied to the definition of the physical and electrical characteristics at the interface of 1544 kbit/s.

The provision of a synchronization clock to the dedicated transmission system is outside the scope of this International Standard.

Timeslots 1 to 24 shall be used for IPCs using this type of IVN, each IPC with the following bearer capability shown in Table 2.

6.1.2 Structured 1544 kbit/s (1536 kbit/s timeslots) Digital Leased Line

The IVN provides a structured bit stream at 1544 kbit/s with channelisation at the physical interface. The transmission at the physical layer is provided by the transmission system operation at the rate of 1544 kbit/s.

The mapping functions shall be able to provide the followings in accordance with ITU-T Recommendations:

ITU-T Rec.G.704 shall be applied to the definition of the frame structure at the interface of 1544 kbit/s, including the frame format at the interface. The physical adaptation of the mapping function shall be able to provide a 8 kHz frame structure of 24 timeslots (numbered from 1 to 24) in accordance with ITU-T Rec.G.704, clauses 2.1.1 and 2.1.2.

ITU-T Rec.G.706, clauses 2.1.1 and 2.1.2 shall be applied to the definition of the frame alignment procedures at the interface of 2048 kbit/s.

ITU-T Rec.G.703, clause 2 shall be applied to the definition of the physical and electrical characteristics at the interface of 1544 kbit/s.

The provision of a synchronization clock to the dedicated transmission system is outside the scope of this International Standard.

Timeslots 1 to 24 shall be used for IPCs using this type of IVN, each IPC with the following bearer capability shown in Table 5.2, where timeslots 0 shall be used to carry the information described in ITU-T Rec.G.704.

6.1.3 Structured 1554 kbit/s (24 x 64 kbit/s timeslots) Digital Leased Line

The IVN provides the bit stream at 1544 kbit/s with channelisation of 24 channels of 64 kbit/s each at the physical interface. The transmission at the physical layer is provided by the transmission system operation at the rate of 1544 kbit/s.

The mapping functions shall be able to provide the followings in accordance with ITU-T Recommendations:

ITU-T Rec.G.704 shall be applied to the definition of the frame structure at the interface of 1544 kbit/s, including:

- the frame format at the interface
- number of bits per 64 kbit/s channel time slot
- number of 64 kbit/s channel time slot
- use of 64 kbit/s channel time slot

Copyright International Organization for Standardization
Provided by IHS under license with ISO
No reproduction or networking permitted without license from IHS Not for Resale

The physical adaptation of the mapping function shall be able to provide a 8 kHz frame structure in accordance with ITU-T Rec.G.704, clauses 2.1.1 and 2.1.3. The physical adaptation shall, according to ITU-T Rec.G.704 clauses 3.1.1.1 and 3.1.1.2, distinguish 24 timeslots of 192 bits. Timeslots shall be numbered from 1 to 24. Each timeslot shall consist of 8 bits.

Timeslots 1 to 24 shall be used for 24 channels, each channel with the following bearer capabilities:

- information transfer capability, unrestricted digital information
- information transfer rate: 64 kbit/s

If a Dq channel is mapped onto the interface at the C reference point, the allocation of a time slot is not specified.

ITU-T Rec.G.706, clause 2.1.1 and 2.1.2 shall be applied to the definition of the frame alignment procedures at the interface of 1544 kbit/s.

ITU-T Rec.G.703, clause 2 shall be applied to the definition of the physical and electrical characteristics at the interface of 1544 kbit/s.

The provision of a synchronization clock to the dedicated transmission system is outside the scope of this International Standard.

6.1.4 Unstructured 2048 kbit/s Digital Leased Line

The IVN provides unstructured bit stream at 2048 kbit/s with no channelisation at the physical interface. The transmission at the physical layer is provided by the transmission system operation at the rate of 2048 kbit/s.

The mapping functions shall be able to provide the followings in accordance with ITU-T Recommendations:

ITU-T Rec.G.704 shall be applied to the definition of the frame structure at the interface of 2048 kbit/s, including the frame format at the interface. The physical adaptation of the mapping function shall be able to provide a 8 kHz frame structure of 32 timeslots (numbered from 0 to 31) in accordance with ITU-T Rec.G.704, clauses 2.3.1 and 2.3.2.

ITU-T Rec.G.706, clauses 4.1.1 and 4.1.2 shall be applied to the definition of the frame alignment procedures at the interface of 2048 kbit/s.

ITU-T Rec.G.703, clause 6 shall be applied to the definition of the physical and electrical characteristics at the interface of 2048 kbit/s.

The provision of a synchronization clock to the dedicated transmission system is outside the scope of this International Standard.

Timeslots 1 to 31 shall be used for IPCs using this type of IVN, each IPC with the following bearer capability shown in Table 5.5, where timeslots 0 shall be used to carry the information described in ITU-T Rec.G.704.

Note: In some countries, timeslot 0 might be used for an IPC using this type of IVN.

6.1.5 Structured 2048 kbit/s (1984 kbit/s timeslots) Digital Leased Line

The IVN provides a structured bit stream at 2048 kbit/s with channelisation at the physical interface. The transmission at the physical layer is provided by the transmission system operation at the rate of 2048 kbit/s.

The mapping functions shall be able to provide the followings in accordance with ITU-T Recommendations:

ITU-T Rec.G.704 shall be applied to the definition of the frame structure at the interface of 2048 kbit/s, including the frame format at the interface. The physical adaptation of the mapping function shall be able to provide a 8 kHz frame structure of 31 timeslots (numbered from 1 to 31) in accordance with ITU-T Rec.G.704, clauses 2.3.1 and 2.3.2.

ITU-T Rec.G.706, clauses 4.1.1 and 4.1.2 shall be applied to the definition of the frame alignment procedures at the interface of 2048 kbit/s.

ITU-T Rec.G.703, clause 6 shall be applied to the definition of the physical and electrical characteristics at the interface of 2048 kbit/s.

The provision of a synchronization clock to the dedicated transmission system is outside the scope of this International Standard.

Timeslots 1 to 31 shall be used for IPCs using this type of IVN, each IPC with the following bearer capability shown in Table 5.6, where timeslots 0 shall be used to carry the information described in ITU-T Rec.G.704.

--`,,```,,,,````-`-`,,`,,`,`,,`---

Copyright International Organization for Standardization
Provided by IHS under license with ISO
No reproduction or networking permitted without license from IHS Not for Resale

6.1.6 Structured 2048 kbit/s (31 x 64 kbit/s timeslots) Digital Leased Line

The IVN provides the bit stream at 2048 kbit/s with channelisation of 32 channels of 64 kbit/s each at the physical interface. The transmission at the physical layer is provided by the transmission system operation at the rate of 2048 kbit/s.

Note: The 'structured' include the aspect that a part of frame is channelized,. The case of the channelization with only 'ISO' as structured, whether or not the remaining information transfer capacity of 1994 kbit/s is divided into 31 timeslot is also included.

The mapping functions shall be able to provide the followings in accordance with ITU-T Recommendations:

ITU-T Rec.G.704 shall be applied to the definition of the frame structure at the interface of 2048 kbit/s, including:

- the frame format at the interface
- number of bits per 64 kbit/s channel time slot
- number of 64 kbit/s channel time slot
- use of 64 kbit/s channel time slot

The physical adaptation of the mapping function shall be able to provide a 8 kHz frame structure in accordance with ITU-T Rec.G.704, clauses 5.1.1.1 and 5.1.1.2. The physical adaptation shall derive 31 channels of 64 kbit/s each.

The physical adaptation shall be able to provide the Cyclic Redundancy Check 4 procedure (CRC-4) in accordance with ITU-T Rec.G.706 clause 4.3.3. The use of CRC-4 is outside the scope of this International Standard.

Timeslots 1 to 31 shall be used for 31 channels, each channel with the following bearer capabilities:

- information transfer capability, unrestricted digital information
- information transfer rate: 64 kbit/s

If a Dq channel is mapped onto the interface at the C reference point, the allocation of a time slot shall be under the PISN authority's discretion. TS16 shall be used as a default.

ITU-T Rec.G.706, clause 4.1.1 and 4.1.2 shall be applied to the definition of the frame alignment procedures at the interface of 2048 kbit/s.

ITU-T Rec.G.703, clause 6 shall be applied to the definition of the physical and electrical characteristics at the interface of 2048 kbit/s.

The provision of a synchronization clock to the dedicated transmission system is outside the scope of this International Standard.

Timeslots 1 to 31 shall be used for IPCs using this type of IVN, each IPC with the following bearer capability shown in Table 5.7.

6.1.7 64 kbit/s Digital Leased Line

At the C reference point, layer 1 termination shall be in accordance with ITU-T Rec.G.703, clause 1.

At the C reference point, the interface described in this clause provides for one IPC with the following bearer capability:

- information transfer capability: unrestricted digital information
- Information transfer rate: 64 kbit/s

6.1.8 ISDN 1544 kbit/s Primary Rate User-Network Layer 1 Interface

Layer 1 termination shall be in accordance with ITU-T Rec.I.431. Timeslots 1 to 24 shall be used for up to 24 IPCs, each IPC with the bearer capability shown in table 5.9.

Note: Timeslots that are not through connected to the peer PINX will not be used for an IPC.

6.1.9 ISDN 2048 kbit/s Primary Rate User-Network Layer 1 Interface

Layer 1 termination shall be in accordance with ITU-T Rec.I.431. Timeslots 1 to 31 shall be used for up to 31, IPCs, each IPC with the bearer capability shown in table 5.10.

Note: Timeslots that are not through connected to the peer PINX will not be used for an IPC.

--`,,```,,,,````-`-`,,`,,`,`,,`---
Copyright International Organization for Standardization
Provided by IHS under license with ISO
No reproduction or networking permitted without license from IHS Not for Resale

6.1.10 ISDN Basic Rate User-Network Layer 1 Interface

Layer 1 termination shall be in accordance with ITU-T Rec.I.430. When the IVN supports the D-channel end-to-end then 3 IPCs we provided at the C reference point with the bearer capability shown in Table 10. When the IVN does not support the D-channel end-to-end then 2 IPCs are provided at the C reference point with the bearer capability shown in Table 5.11.

6.2 Mapping Matrix

6.2.1 Channel Allocation

The mapping functional grouping shall be able to offer sequential numbering of the channels at the Q reference point. To cope with the requirements of the channels of N x 64 kbit/s which may need consecutive channel numbering at protocol level, channels have sequential numbers within routes at the Q reference point, not just within the entire link. The Figure. 6.1 shows an example of channel mapping in case of structured digital leased line:

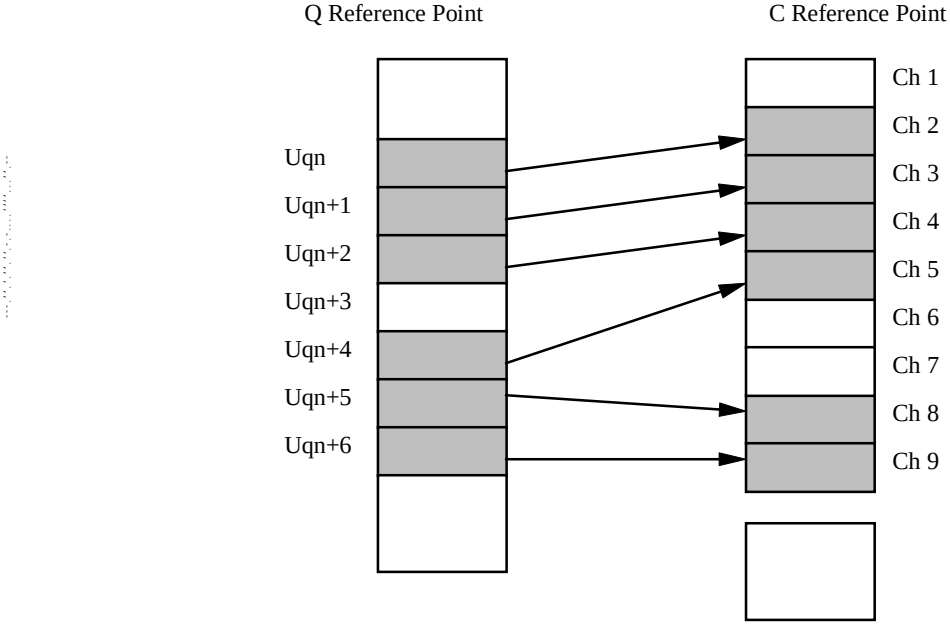

Figure 6.1 — Channel Mappings

If a PINX supports physical adaptation in accordance with the clauses 5.1, it shall support the mapping of at least one of the followings;

- the mapping of multiple instances of the Q reference point onto a single interface at the C reference point. In this case channel allocation and the Uq channel numbering are implementation options.
- the mapping of a single instance of the Q reference point onto multiple interfaces at the C reference point. In this case channel allocation and the Uq channel numberings are implementation options.

A shard access includes more than one IPL on the same interface, as shown figure 6.1. In this case, the channel allocation and the numbering of Dq and/or Uq channels shall be specified in the inter-PINX-link. The Dq and/or Uq channels shall be mapped onto the timeslots on the interface at the C reference point, the ordering of the timeslots shall be conformed to the numberings of Dq and/or Uq channel at the Q reference point.

Possible Time Slot Sequence Integrity (TSS1) requirement for the N x 64 k bit/s channels at the Q reference point, will be satisfied by the TSS1 requirements stated for the corresponding IPCs bearer capabilities in the tables of subclause 5.3, provided that each such N x 64 kbit/s channel is mapped onto a single physical interface and that the mapping of each of the N channels (comprising the N x 64 kbit/s channel at the Q reference point) onto the channels of this single physical interface at the C reference keeps their ordering.

An example is shown by the Figure 6.2

Copyright International Organization for Standardization
Provided by IHS under license with ISO
No reproduction or networking permitted without license from IHS Not for Resale

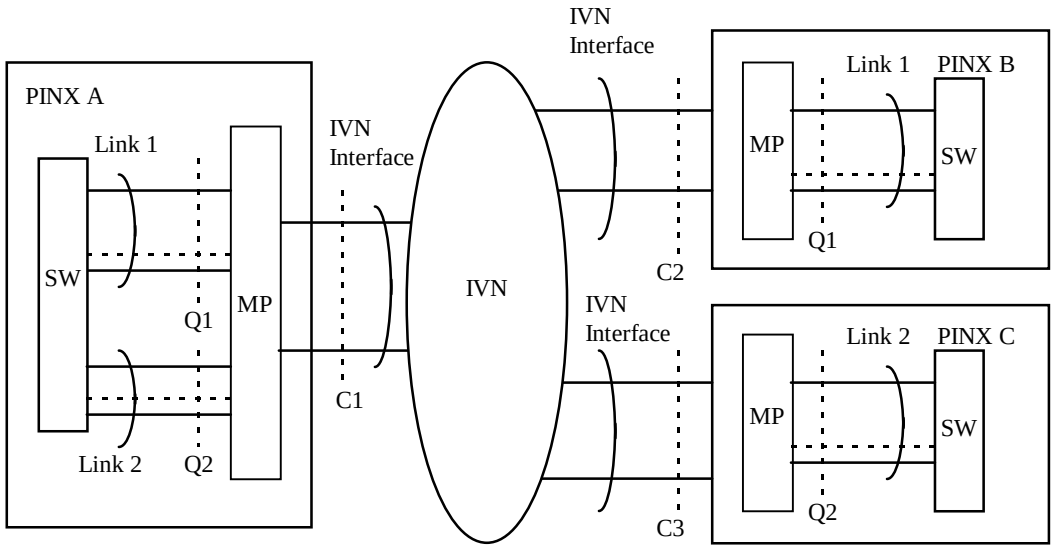

Figure 6.2 — Shared Access scheme

The channels of timeslots allocation of each type of interface is indicated below.

6.2.1.1 Structured 1544 kbit/s Digital Leased Line

For physical adaptation according to 6.1.2 and 6.1.3, the following channel allocation and Uq channel numbering shall be provided as a default:

Dq and/or Uq channel shall be mapped onto timeslots 1..24 (at the C reference point).

The allocation of Dq channel is implementation options and is not specified.

6.2.1.2 Unstructured 2048 kbit/s Digital Leased Line

For physical adaptation according to 6.1.4 the following channel allocation and Uq channel numbering shall be provided as a default:

The Dq channel shall be mapped to timeslot 16.

The Uq channels shall be mapped to timeslots of the interface as follows:

- Timeslots 1..15 (at C reference point) are respectively Uq channels 1..15
- Timeslots 17..31 (at C reference point) are respectively Uq channels 16..30

6.2.1.3 Structured 2048 kbit/s Digital Leased Line

For physical adaptation according to 6.1.5 and 6.1.6, the following channel allocation and Uq channel numbering shall be provided as a default:

The Dq channel shall be mapped to timeslots 16.

The Uq channel shall be mapped to timeslots of the interface as follows:

- Timeslots 1..15 (at the C reference point) are respectively Uq channels 1..15
- Timeslots 17..31 (at the C reference point) are respectively Uq channels 16..30.

Other channel-to-timeslots mapping shall be subject to mutual agreement.

6.2.1.4 64 kbit/s Digital Leased Line

The channel allocation and the numbering of Uq channels are implementation options and are not specified.

6.2.1.5 ISDN 1544 kbit/s Primary Rate User-Network Layer 1 Interface

For physical adaptation according to 6.1.9, the following channel allocation and Uq channel numbering shall be provided as a default:

Dq and/or Uq channel shall be mapped onto timeslots 1-24 at the C reference point. The allocation of Dq channel is implementation options and is not specified.

Copyright International Organization for Standardization
Provided by IHS under license with ISO
No reproduction or networking permitted without license from IHS Not for Resale

6.2.1.6 ISDN 2048 kbit/s Primary Rate User-Network Layer 1 Interface

For physical adaptation according to 6.1.10, the following channel allocation and Uq channel numbering shall be provided as a default:

The Dq channel shall be mapped to timeslots 16.The Uq channel shall be mapped to timeslots of the interface as follows:

- Timeslots 1..15 (at the C reference point) are respectively Uq channels 1..15
- Timeslots 17..31 (at the C reference point) are respectively Uq channels 16..30.

6.2.1.7 ISDN Basic Rate User-Network Layer 1 Interface with end-to-end D channel

For physical adaptation according to 6.1.11, the following channel allocation and Uq channel numbering shall be provided as default:

The Dq channel shall be mapped onto the D-channel of the interface at the C reference point.

The Uq channel shall be mapping onto the B-channel of the interface a the C reference point as follows:

- B1 (at the C reference point) is Uq channel 1
- B2 (at the C reference point) is Uq channel 2

6.2.1.8 ISDN Basic Rate User-Network Layer 1 Interface without end-to-end D channel

For physical adaptation according to 6.1.11, the following channel allocation and Uq channel numbering shall be provided as a default:

- The Dq channel shall be mapped onto B1 channel of the interface at the C reference point.
- The Uq channel 1 shall be mapped onto B2 channel of the interface at the C reference point.

6.2.2 QSIG Signalling Carriage Mechanism

QSIG signalling carriage mechanism provides for appropriate accommodation of the QSIG call control protocol to the IVN bearer capabilities for conveying PISN call control information. In the scenarios this International Standard defines, QSIG Layer 3 is supported by the SCM (Signalling Carriage Mechanism), which maps down to the circuit-mode service of the underlying physical layer.

The SCM connection of layer 2 on Dq channel shall be according to ITU-T Rec.Q.921.

The SCM provides for the information transfer services to the QSIG layer 3 with the following associated primitives:

- Data transfer that is PSS1 protocol message transfer, using the primitives of DL-DATA-REQUEST/ DL-DATA-INDICATION
- Establishment, using the primitives of DL-ESTABLISH-REQUEST/ DL-ESTABLISH-INDICATION
- Release, using the primitives of DL-RELEASE-REQUEST/ DL-RELEASE-INDICATION

Note: The services required of the SCM are defined in terms of the services provided by ISO-8886. An implementation is not constrained to the use of the ISO-8886 protocol in order to provide these primitives.

The bearer capability for the Dq channel shall be as indicated in Table 5.11.

--`,,```,,,,````-`-`,,`,,`,`,,`---
Copyright International Organization for Standardization
Provided by IHS under license with ISO
No reproduction or networking permitted without license from IHS Not for Resale

Table 6.1 — Attributes for the QSIG carriage Mechanism

Attribute	Value
Information transfer capability	Unrestricted digital information
Transfer mode	Packet mode
Information transfer rate	64 kbit/s
Structure	Service Data unit Integrity
Configuration	Point-to-point
Establishment	Permanent
Symmetry	Bi-directional symmetric

The definition of attributes and their values shall be as specified in ITU-T Rec.I.210.

6.3 Protocol Relationship between Q/C Reference Point

The protocol profile particular to this scenario is show below:

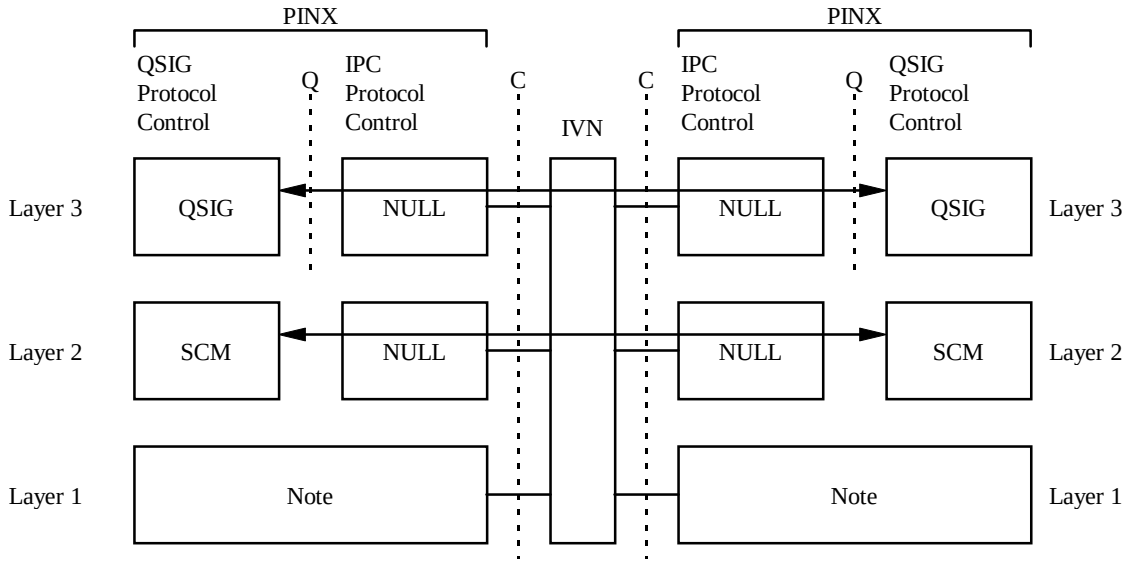

Figure 6.3 — Protocol Relationship between Q/C Reference Point

Note:

- The C reference point is defined at the point between the IVN and the IPC Protocol Control.
- The Q reference point is defined at the point between the QSIG Protocol Control entities.
- After an IPC is established to the adjacent PINX via the IVN, the information transferred between QSIG Protocol Control entities is transparent to the IVN and the IPC Protocol Control.

7. Mapping Information

At both sides of the inter-PINX connection, mapping information is required to administer the scenarios. Part of the information is of link significance, i.e. it needs to be the same in both PINXs, and part of the information is of access significance only.

Copyright International Organization for Standardization
Provided by IHS under license with ISO
No reproduction or networking permitted without license from IHS
Not for Resale

7.1 Identification of the Inter-PINX Link

The identification of the inter-PINX link is equivalent to the identification of the instance of Q reference point. The identification shall consist of a PINX identifier Q-ID. The allocation of Q-ID values is subject to the PISN Authority discretion. The structure and the values of Q-ID are outside the scope of this International Standard. How this information is provided to the PINXs is the outside of this International Standard.

On IPC establishment, the identification information shall be presented to the PINX's management entity.

This information will be provided via manual interactions at both PINXs.

7.2 Identification of IPC

The identification of IPCs and IVNs are of local significance only. The structure and the values of this information are outside the scope of this International Standard.

Copyright International Organization for Standardization
Provided by IHS under license with ISO
No reproduction or networking permitted without license from IHS Not for Resale

Annex A

(normative)

Implementation Conformance Statement (ICS) proforma

A.1 Introduction

The supplier of a protocol implementation which is claimed to conform to this International Standard shall complete the implementation conformance statement (ICS) proforma in clause A.3.

A completed ICS proforma is the ICS for the implementation in question. The ICS is a statement of which capabilities and options have been implemented. The ICS can have a number of uses, including use:

by the equipment implementor, as a check list to reduce the risk of failure to conform to the standard through oversight;

by the supplier and acquirer, or potential acquirer, of the implementation, as a detailed indication of the capabilities of the implementation, stated relative to the common basis for understanding provided by the standard's ICS proforma;

by the user or potential user of an implementation, as a basis for initially checking the possibility of interworking with another implementation. While interworking can never be guaranteed, failure to interwork can often be predicted from incompatible ICSs.

A.2. Instructions for completing the ICS proforma

A.2.1 General structure of the ICS proforma

The ICS proforma is a fixed-format questionnaire divided into subclauses each containing a group of individual items. Each item is identified by an item number, the name of the item (question to be answered), and the reference(s) to the clause(s) that specified (specify) the item in the main body of this International Standard.

The "status" column indicated whether an item is applicable and if so whether support is mandatory or optional. The following terms are used:

m mandatory (the capability is required for conformance);

o optional (the capability is not required for conformance, but if the capability is implemented it is required to conform to the specifications);

o.<n> optional, but support of at least one of the group of options labeled by the same numeral <n> is required;

x prohibited;

c.<cond> conditional requirement, depending on support for the item or items listed in condition <cond>;

<item>:m simple conditional requirement, the capability being mandatory if item number <item> is supported, otherwise not applicable;

<item>:o simple conditional requirement, the capability being optional if item number <item> is supported, otherwise not applicable;

Answers to the questionnaire items are to be provided either in the "support" column, by simply marking an answer to indicate restricted choice (Yes) or (No), or in the "Not Applicable" column (N/A).

Copyright International Organization for Standardization
Provided by IHS under license with ISO
No reproduction or networking permitted without license from IHS Not for Resale

A.3 ICS proforma for PINX implementation

A.3.1 Implementation identification

Supplier	
Contact point for queries about the ICS	
Implementation name(s) and version(s)	
Other information necessary for full identification, e.g. name(s) and version(s) for machines and/or operation systems; system name(s)	

Only the first three items are required for all implementations; other information may be completed as appropriate in meeting requirements for full identification.

The terms name and version should be interpreted appropriately to correspond with a supplier's terminology (e.g. type, series, model).

A.3.2 Implementation summary

Implementation version	1.0
Addenda implemented(if applicable)	
Amendments implemented	
Have any exception items been required (see A.2.3)?	No[ ] Yes[ ] (The answer Yes means that the implementation does not conform to this International Standard)

Date of statement	

--`,,```,,,,````-`-`,,`,,`,`,,`---
Copyright International Organization for Standardization
Provided by IHS under license with ISO
No reproduction or networking permitted without license from IHS Not for Resale

A.3.3 General

Item	Name of Item	Reference	Status	N/A	Support
A.3.3.1	Support of 1544 kbit/s digital unstructured leased line	5.2	o.1		Yes[ ] No[ ]
A.3.3.2	Support of 1544 kbit/s digital structured leased line	5.2	o.1		Yes[ ] No[ ]
A.3.3.3	Support of 1544 kbit/s digital structured leased line	5.2	o.1		Yes[ ] No[ ]
A.3.3.4	Support of 2048 kbit/s digital unstructured leased line	5.2	o.1		Yes[ ] No[ ]
A.3.3.5	Support of 2048 kbit/s digital structured leased line	5.2	o.1		Yes[ ] No[ ]
A.3.3.6	Support of 2048 kbit/s digital structured leased line	5.2	o.1		Yes[ ] No[ ]
A.3.3.7	Support of 64 kbit/s unrestricted digital leased line	5.2	o.1		Yes[ ] No[ ]
A.3.3.8	Support of ISDN 1544 kbit/s primary rate user-network layer 1 interface	5.2	o.1		Yes[ ] No[ ]
A.3.3.9	Support of ISDN 2048 kbit/s primary rate user-network layer 1 interface	5.2	o.1		Yes[ ] No[ ]
A.3.3.10	Support of ISDN basic user-network layer 1 interface with end-to-end D-channel	5.2	o.1		Yes[ ] No[ ]
A.3.3.11	Support of ISDN basic user-network layer 1 interface without end-to-end D-channel	5.2	o.1		Yes[ ] No[ ]
A.3.3.12	Support of bearer conditioning for the DQ-channel	5.2	m		Yes[ ]
A.3.3.13	Support of multiple types of interfaces per instance of the Q reference point	5.2	o		Yes[ ] No[ ] If Yes then specify combinations and limitations

A.3.4 Unstructured 1544 kbit/s Digital leased line

Item	Name of Item	Reference	Status	N/A	Support
A.3.4.1	Support of default channel allocation and Uq-channel numbering	6.1.1	A.3.3.1:m	[ ]	Yes[ ] No[ ]
A.3.4.2	Support of non-default channel allocation and Uq-channel numbering	6.1.1	A.3.3.1:o	[ ]	Yes[ ] No[ ] If Yes then see note

NOTE

Specify channel allocations and limitations, e.g.

- the maximum number of Dq-channels per interface;
- the maximum number of Uq-channels per Dq-channel per interface
- the maximum number of interfaces of this type per instance of the Q reference point

Copyright International Organization for Standardization
Provided by IHS under license with ISO
No reproduction or networking permitted without license from IHS Not for Resale

A.3.5 Structured 1544 kbit/s digital leased line

Item	Name of Item	Reference	Status	N/A	Support
A.3.5.1	Support of fractional use of physical interface	6.1.2	A.3.3.2:o	[ ]	Yes[ ] No[ ]
A.3.5.2	Support of default channel allocation and Uq-channel numbering	6.1.2	A.3.3.2:m	[ ]	Yes[ ] No[ ]
A.3.5.3	Support of non-default channel allocation and Uq-channel numbering	6.1.2	A.3.3.2:o	[ ]	Yes[ ] No[ ] If Yes then see note

NOTE

Specify channel allocations and limitations, e.g.

- the maximum number of Dq-channels per interface;
- the maximum number of Uq-channels per Dq-channel per interface
- the maximum number of interfaces of this type per instance of the Q reference point

A.3.6 Structured 1544 kbit/s digital leased line

Item	Name of Item	Reference	Status	N/A	Support
A.3.6.1	Support of fractional use of physical interface	6.1.3	A.3.3.3:o	[ ]	Yes[ ] No[ ]
A.3.6.2	Support of default channel allocation and Uq-channel numbering	6.1.3	A.3.3.3:m	[ ]	Yes[ ] No[ ]
A.3.6.3	Support of non-default channel allocation and Uq-channel numbering	6.1.3	A.3.3.3:o	[ ]	Yes[ ] No[ ] If Yes then see note

NOTE

Specify channel allocations and limitations, e.g.

- the maximum number of Dq-channels per interface;
- the maximum number of Uq-channels per Dq-channel per interface
- the maximum number of interfaces of this type per instance of the Q reference point

A.3.7 Unstructured 2048 kbit/s Digital leased line

item	Name of Item	Reference	Status	N/A	Support
A.3.7.1	Support of default channel allocation and Uq-channel numbering	6.1.4	A.3.3.4:m	[ ]	Yes[ ] No[ ]
A.3.7.2	Support of non-default channel allocation and Uq-channel numbering	6.1.4	A.3.3.4:o	[ ]	Yes[ ] No[ ] If Yes then see note

NOTE

Specify channel allocations and limitations, e.g.

- the maximum number of Dq-channels per interface;
- the maximum number of Uq-channels per Dq-channel per interface
- the maximum number of interfaces of this type per instance of the Q reference point

Copyright International Organization for Standardization
Provided by IHS under license with ISO
No reproduction or networking permitted without license from IHS Not for Resale

A.3.8 Structured 2048 kbit/s Digital leased line

item	Name of Item	Reference	Status	N/A	Support
A.3.8.1	Support of default channel allocation and Uq-channel numbering	6.1.5	A.3.3.5:m	[ ]	Yes[ ] No[ ]
A.3.8.2	Support of non-default channel allocation and Uq-channel numbering	6.1.5	A.3.3.5:o	[ ]	Yes[ ] No[ ] If Yes then see note

NOTE

Specify channel allocations and limitations, e.g.

- the maximum number of Dq-channels per interface;
- the maximum number of Uq-channels per Dq-channel per interface
- the maximum number of interfaces of this type per instance of the Q reference point

A.3.9 Structured 2048 kbit/s Digital leased line

item	Name of Item	Reference	Status	N/A	Support
A.3.9.1	Support of default channel allocation and Uq-channel numbering	6.1.6	A.3.3.6:m	[ ]	Yes[ ] No[ ]
A.3.9.2	Support of non-default channel allocation and Uq-channel numbering	6.1.6	A.3.3.6:o	[ ]	Yes[ ] No[ ] If Yes then see note

NOTE

Specify channel allocations and limitations, e.g.

- the maximum number of Dq-channels per interface;
- the maximum number of Uq-channels per Dq-channel per interface
- the maximum number of interfaces of this type per instance of the Q reference point

A.3.10 64 kbit/s Digital leased line

item	Name of Item	Reference	Status	N/A	Support
A.3.10.1	Dq-channel can be mapped to the interface	6.1.7	A.3.3.7:o.1	[ ]	Yes[ ] No[ ]
A.3.10.2	Uq-channel can be mapped to the interface	6.1.7	A.3.3.7:o.1		Yes[ ] No[ ]
A.3.10.3	Maximum number of interfaces of this type per instance of the Q reference point	6.1.7	A.3.3.7:m	[ ]	

A.3.11 ISDN 1544 kbit/s primary rate user-network layer 1 interface

item	Name of Item	Reference	Status	N/A	Support
A.3.11.1	Support of default channel allocation and Uq-channel numbering	6.1.8	A.3.3.8:m	[ ]	Yes[ ] No[ ]
A.3.11.2	Support of non-default channel allocation and Uq-channel numbering	6.1.8	A.3.3.8:o	[ ]	Yes[ ] No[ ] If Yes then see note

NOTE

Specify channel allocations and limitations, e.g.

- the maximum number of Dq-channels per interface;
- the maximum number of Uq-channels per Dq-channel per interface
- the maximum number of interfaces of this type per instance of the Q reference point

Copyright International Organization for Standardization
Provided by IHS under license with ISO
No reproduction or networking permitted without license from IHS Not for Resale

A.3.12 ISDN 2048 kbit/s primary rate user-network layer 1 interface

item	Name of Item	Reference	Status	N/A	Support
A.3.12.1	Support of default channel allocation and Uq-channel numbering	6.1.9	A.3.3.9:m	[ ]	Yes[ ] No[ ]
A.3.12.2	Support of non-default channel allocation and Uq-channel numbering	6.1.9	A.3.3.9:o	[ ]	Yes[ ] No[ ] If Yes then see note

NOTE

Specify channel allocations and limitations, e.g.

- the maximum number of Dq-channels per interface;
- the maximum number of Uq-channels per Dq-channel per interface
- the maximum number of interfaces of this type per instance of the Q reference point

A.3.13 ISDN Basic user-network layer 1 interface with end-to-end D-channel

item	Name of Item	Reference	Status	N/A	Support
A.3.13.1	Support of default channel allocation and Uq-channel numbering	6.1.10	A.3.3.10:m	[ ]	Yes[ ] No[ ]
A.3.13.2	Support of non-default channel allocation and Uq-channel numbering	6.1.10	A.3.3.10:o	[ ]	Yes[ ] No[ ] If Yes then see note

NOTE

Specify channel allocations and limitations, e.g.

- the maximum number of Dq-channels per interface;
- the maximum number of Uq-channels per Dq-channel per interface
- the maximum number of interfaces of this type per instance of the Q reference point

--`,,```,,,,````-`-`,,`,,`,`,,`---
Copyright International Organization for Standardization
Provided by IHS under license with ISO
No reproduction or networking permitted without license from IHS
Not for Resale

Copyright International Organization for Standardization
Provided by IHS under license with ISO
No reproduction or networking permitted without license from IHS
Not for Resale

© ISO/IEC

ICS 35.110

Descriptors: data processing, information interchange, telecommunications, network interconnection, telecommunication network, private network, ISDN, exchanges .GB. PINXs, electric connections.

Price based on 24 pages

Copyright International Organization for Standardization
Provided by IHS under license with ISO
No reproduction or networking permitted without license from IHS

Not for Resale