INTERNATIONAL STANDARD

ISO/IEC 14443-2

First edition
2001-07-01

Identification cards — Contactless integrated circuit(s) cards — Proximity cards —

Part 2: Radio frequency power and signal interface

Cartes d'identification — Cartes à circuit(s) intégré(s) sans contact — Cartes de proximité —

Partie 2: Puissance de la fréquence radio et interface du signal

Reference number
ISO/IEC 14443-2:2001(E)

© ISO/IEC 2001

--`,,```,,,,````-`-`,,`,,`,`,,`---

Copyright International Organization for Standardization
Provided by IHS under license with ISO
No reproduction or networking permitted without license from IHS

Not for Resale

PDF disclaimer

This PDF file may contain embedded typefaces. In accordance with Adobe's licensing policy, this file may be printed or viewed but shall not be edited unless the typefaces which are embedded are licensed to and installed on the computer performing the editing. In downloading this file, parties accept therein the responsibility of not infringing Adobe's licensing policy. The ISO Central Secretariat accepts no liability in this area.

Adobe is a trademark of Adobe Systems Incorporated.

Details of the software products used to create this PDF file can be found in the General Info relative to the file; the PDF-creation parameters were optimized for printing. Every care has been taken to ensure that the file is suitable for use by ISO member bodies. In the unlikely event that a problem relating to it is found, please inform the Central Secretariat at the address given below.

© ISO/IEC 2001

All rights reserved. Unless otherwise specified, no part of this publication may be reproduced or utilized in any form or by any means, electronic or mechanical, including photocopying and microfilm, without permission in writing from either ISO at the address below or ISO's member body in the country of the requester.

ISO copyright office
Case postale 56 • CH-1211 Geneva 20
Tel. + 41 22 749 01 11
Fax + 41 22 749 09 47
E-mail copyright@iso.ch
Web www.iso.ch

Printed in Switzerland

© ISO/IEC 2001 – All rights reserved

Copyright International Organization for Standardization
Provided by IHS under license with ISO
No reproduction or networking permitted without license from IHS

Not for Resale

Contents

Page

Foreword iv

Introduction v

1 Scope 1

2 Normative references 1

3 Terms and definitions 1

4 Symbols and abbreviated terms 2

5 Initial dialogue for proximity cards 3

6 Power transfer 3
6.1 Frequency 3
6.2 Operating field 3

7 Signal interface 3

8 Communication signal interface Type A 4
8.1 Communication PCD to PICC 4
8.1.1 Bit rate 4
8.1.2 Modulation 4
8.1.3 Bit representation and coding 6
8.2 Communication PICC to PCD 7
8.2.1 Bit rate 7
8.2.2 Load modulation 7
8.2.3 Subcarrier 7
8.2.4 Subcarrier modulation 7
8.2.5 Bit representation and coding 7

9 Communication signal interface Type B 8
9.1 Communication PCD to PICC 8
9.1.1 Bit rate 8
9.1.2 Modulation 8
9.1.3 Bit representation and coding 8
9.2 Communication PICC to PCD 9
9.2.1 Bit rate 9
9.2.2 Load modulation 9
9.2.3 Subcarrier 9
9.2.4 Subcarrier modulation 9
9.2.5 Bit representation and coding 9

10 PICC minimal coupling zone 10

Annex A (informative) **Compatibility with other card standards** 11

© ISO/IEC 2001 – All rights reserved

Copyright International Organization for Standardization
Provided by IHS under license with ISO
No reproduction or networking permitted without license from IHS
Not for Resale

Foreword

ISO (the International Organization for Standardization) and IEC (the International Electrotechnical Commission) form the specialized system for worldwide standardization. National bodies that are members of ISO or IEC participate in the development of International Standards through technical committees established by the respective organization to deal with particular fields of technical activity. ISO and IEC technical committees collaborate in fields of mutual interest. Other international organizations, governmental and non-governmental, in liaison with ISO and IEC, also take part in the work.

International Standards are drafted in accordance with the rules given in the ISO/IEC Directives, Part 3.

In the field of information technology, ISO and IEC have established a joint technical committee, ISO/IEC JTC 1. Draft International Standards adopted by the joint technical committee are circulated to national bodies for voting. Publication as an International Standard requires approval by at least 75 % of the national bodies casting a vote.

International Standard ISO/IEC 14443-2 was prepared by Joint Technical Committee ISO/IEC JTC 1, *Information technology*, Subcommittee SC 17, *Identification cards and related devices*.

ISO/IEC 14443 consists of the following parts, under the general title *Identification cards — Contactless integrated circuit(s) cards — Proximity cards*:

— *Part 1: Physical characteristics*

— *Part 2: Radio frequency power and signal interface*

— *Part 3: Initialization and anticollision*

— *Part 4: Transmission protocol*

Annex A of this part of ISO/IEC 14443 is for information only.

--`,,```,,,,````-`-`,,`,,`,`,,`---
© ISO/IEC 2001 – All rights reserved
Copyright International Organization for Standardization
Provided by IHS under license with ISO
No reproduction or networking permitted without license from IHS
Not for Resale

Introduction

ISO/IEC 14443 is one of a series of International Standards describing the parameters for identification cards as defined in ISO/IEC 7810 and the use of such cards for international interchange.

This part of ISO/IEC 14443 describes the electrical characteristics of two types of contactless interface between a proximity card and a proximity coupling device. The interface includes both power and bi-directional communication.

This part of ISO/IEC 14443 does not preclude the incorporation of other standard technologies on the card, such as those referenced in Annex A.

Contactless card standards cover a variety of types as embodied in ISO/IEC 10536 (close-coupled cards), ISO/IEC 14443 (proximity cards), ISO/IEC 15693 (vicinity cards). These are intended for operation when very near, nearby and at a longer distance from associated coupling devices respectively.

The International Organization for Standardization (ISO) and International Electrotechnical Commission (IEC) draw attention to the fact that it is claimed that compliance with this part of ISO/IEC 14443 may involve the use of patents.

ISO and IEC take no position concerning the evidence, validity and scope of this patent right.

The holders of these patent rights have assured ISO and IEC that they are willing to negotiate licences under reasonable and non discriminatory terms and conditions with applicants throughout the world. In this respect, the statements of the holders of patent rights are registered with ISO and IEC. Information may be obtained from:

US Patent US5359323

FRANCE TELECOM
Centre National d'Etudes des
Télécommunications
38-40 rue de Général Leclerc
92794 Issy-les-Molineaux
Cedex 9
France

WO 98/26370
Clause 9.1.2 (Type B) Modulation
WO 98/26370 A1 (pending)
US Patent US 5613159 (Type B)
Europe 0 901 670
French Patent App 96.15163
Int Pat App
PCT/FR97/02229
Innovatron Electronique / RATP
sub clause 9.1.2 and 9.1.3.

INNOVOTRON
Director of International Operations
Innovotrol
1 Rue Danton
75006 Paris
France

MOTOROLA
Motorola ESG
207 route de Ferney
P O Box 15
1218 Grand-Saconnex
Geneva
Switzerland

© ISO/IEC 2001 – All rights reserved

Copyright International Organization for Standardization
Provided by IHS under license with ISO
No reproduction or networking permitted without license from IHS
Not for Resale

	OMRON Intellectual Property Department Law & Intellectual Property H.Q. 20, Igadera Shimokaiinji Nagaokakyo City Kyoto 617-8510 Japan
Patent EP 0 492 569 B1 A system and method for the non-contact transmission of data.	ON-TRACK INNOVATIONS Z.H.R. Industrial Zone P O Box 32 Rosh-Pina 12000 Israel
PHO 90.508 EP-PS 047 35 69 (CH,DE,FR,GB,NL) JP-A 91-211035 US-PS 5 345 231 AT-PS 395 224 Relates to "radio interference interface" as specified in ISO/IEC 14443-2	PHILIPS Director Koninklijke Philips Electronics N.V. P. O. Box 220 5600 AE Eindhoven The Netherlands
Japan patent: 2705076 Japan Utility: 2137036 Europe patent: 324564 Europe patent: 435137 Describing the methods of returning signals from PICC, and related to the load switching technology. Both Type A and Type B are using this technology	SONY CORPORATION Intellectual Property Department Communiactions Systems Solutions Network Co. 6-7-37 Kitashinagawa Shinagawa-ku Tokyo, 141-0001 Japan

The following companies may hold patents relating to this part of ISO/IEC 14443 but have not provided details of the patents or agreed to provide licences.

US 4 650 981	WAYNE S FOLETTA CA 95129, USA 4760 Castlewood Drive San Jose, California CA 9512 USA
US Patent No. 4, 661,691	JOHN W HALPERN C/O Vincent M DeLuca Rothwell, Figg, Ernst & Kurz, p.c. 555 Thirteenth Street, N.W. Suite 701 East Tower Washington, D.C. 20004
WO 89 05549 A	MAGELLAN CORPORATION 8717 Research Drive Irvine CA 92618 USA

Attention is drawn to the possibility that some of the elements of this part of ISO/IEC 14443 may be the subject of patent rights other than those identified above. ISO and IEC shall not be held responsible for identifying any or all such patent rights.

© ISO/IEC 2001 – All rights reserved
Copyright International Organization for Standardization
Provided by IHS under license with ISO
No reproduction or networking permitted without license from IHS
Not for Resale

Identification cards — Contactless integrated circuit(s) cards — Proximity cards —

Part 2:
Radio frequency power and signal interface

1 Scope

This part of ISO/IEC 14443 specifies the characteristics of the fields to be provided for power and bi-directional communication between proximity coupling devices (PCDs) and proximity cards (PICCs).

This part of ISO/IEC 14443 is intended to be used in conjunction with other parts of ISO/IEC 14443.

This part of ISO/IEC 14443 does not specify the means of generating coupling fields, nor the means of compliance with electromagnetic radiation and human exposure regulations which can vary according to country.

2 Normative references

The following normative documents contain provisions which, through reference in this text, constitute provisions of this part of ISO/IEC 14443. For dated references, subsequent amendments to, or revisions of, any of these publications do not apply. However, parties to agreements based on this part of ISO/IEC 14443 are encouraged to investigate the possibility of applying the most recent editions of the normative documents indicated below. For undated references, the latest edition of the normative document referred to apply. Members of ISO and IEC maintain registers of currently valid International Standards.

ISO/IEC 7816-2, *Information technology – Identification cards – Integrated circuit(s) cards with contacts – Part 2: Dimensions and location of the contacts*

ISO/IEC 10373-6, *Identification cards – Test methods – Proximity cards*

ISO/IEC 14443-1, *Identification cards – Contactless integrated circuit(s) cards – Proximity cards – Part 1: Physical characteristics*

ISO/IEC 14443-3, *Identification cards – Contactless integrated circuit(s) cards – Proximity cards – Part 3: Initialization and anticollision*

3 Terms and definitions

For the purposes of this part of ISO/IEC 14443, the following terms and definitions apply.

3.1
bit duration
time during which a logic level is defined, at the end of which a new bit starts

© ISO/IEC 2001 – All rights reserved

Copyright International Organization for Standardization
Provided by IHS under license with ISO
No reproduction or networking permitted without license from IHS
Not for Resale

3.2
binary phase shift keying
phase shift keying where the phase shift is 180°, resulting in two phase state possibilities

3.3
modulation index
defined as [*a*-*b*]/[*a*+*b*] where *a* and *b* are the peak and minimum signal amplitude respectively. The value of the index may be expressed as a percentage

3.4
NRZ-L
method of bit coding whereby a logic level during a bit duration is represented by one of two defined physical states of a communication medium

3.5
subcarrier
signal of frequency *fs* used to modulate a carrier of frequency *fc*

3.6
Manchester
method of bit coding whereby a logic level during a bit duration is represented by a sequence of two defined physical states of a communication medium. The order of the physical states within the sequence defines the logical state

3.7
TR0
guard time between the end of a PCD transmission and the start of the PICC subcarrier generation

3.8
TR1
synchronization time between the start of the PICC subcarrier generation and the start of the PICC subcarrier modulation

4 Symbols and abbreviated terms

ASK Amplitude Shift Keying

BPSK Binary Phase Shift Keying

fc Frequency of operating field (carrier frequency)

fs Frequency of subcarrier modulation

NRZ-L Non-Return to Zero (L for level)

OOK On/Off Keying

PCD Proximity Coupling Device

PICC Proximity Card

RF Radio Frequency

© ISO/IEC 2001 – All rights reserved
Copyright International Organization for Standardization
Provided by IHS under license with ISO
No reproduction or networking permitted without license from IHS
Not for Resale

5 Initial dialogue for proximity cards

The initial dialogue between the PCD and the PICC shall be conducted through the following consecutive operations:

— activation of the PICC by the RF operating field of the PCD;

— the PICC shall wait silently for a command from the PCD;

— transmission of a command by the PCD;

— transmission of a response by the PICC.

These operations shall use the RF power and signal interface specified in the following clauses.

6 Power transfer

The PCD shall produce an energizing RF field which couples to the PICC to transfer power and which shall be modulated for communication.

6.1 Frequency

The frequency *fc* of the RF operating field shall be 13,56 MHz ±7 kHz.

6.2 Operating field

The minimum unmodulated operating field shall be *H*min and has a value of 1,5 A/m rms.

The maximum unmodulated operating field shall be *H*max and has a value of 7,5 A/m rms.

A PICC shall operate as intended continuously between *H*min and *H*max.

A PCD shall generate a field of at least *H*min and not exceeding *H*max at manufacturer specified positions (operating volume).

In addition the PCD shall be capable of powering any single reference PICC (defined in ISO/IEC 10373-6) at manufacturer specified positions (operating volume).

The PCD shall not generate a field higher than the value specified in ISO/IEC 14443-1 (alternating magnetic field) in any possible PICC position.

Test methods for the PCD operating field are defined in ISO/IEC 10373-6.

7 Signal interface

Two communication signal interfaces, Type A and Type B, are described in the following clauses.

The PCD shall alternate between modulation methods when idling before detecting the presence of a PICC of Type A or Type B.

Only one communication signal interface may be active during a communication session until deactivation by the PCD or removal of the PICC. Subsequent session(s) may then proceed with either modulation method.

Figure 1 is an illustration of the concepts described in the following clauses.

--`,,```,,,,````-`-`,,`,,`,`,,`---

© ISO/IEC 2001 – All rights reserved

Copyright International Organization for Standardization
Provided by IHS under license with ISO
No reproduction or networking permitted without license from IHS
Not for Resale

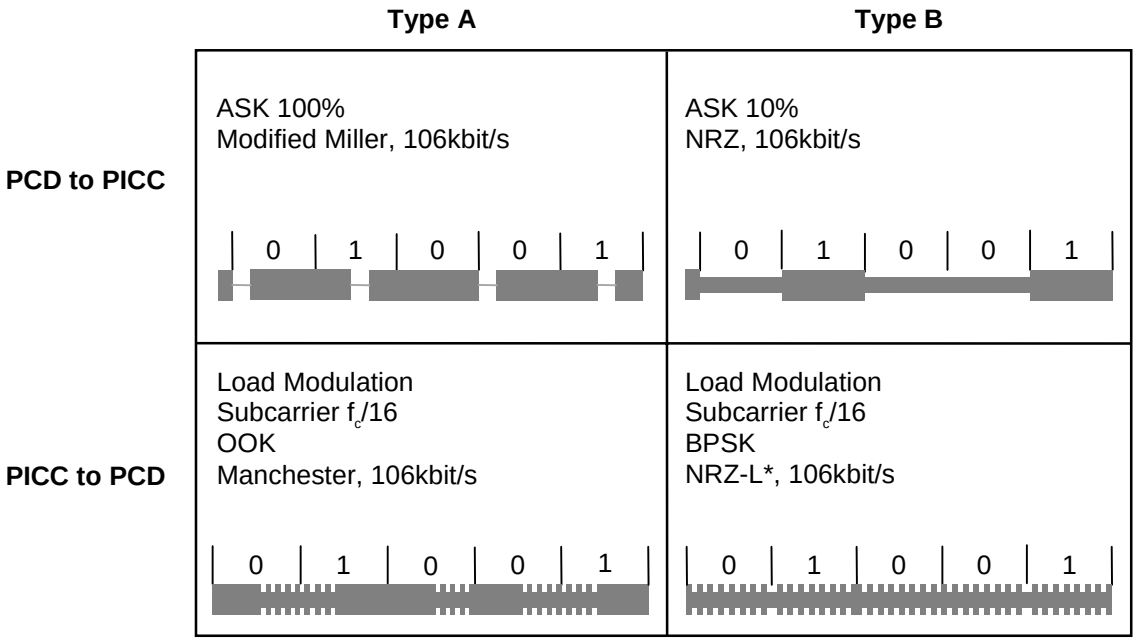

Figure 1 — Example communication signals for Type A and Type B interfaces

8 Communication signal interface Type A

8.1 Communication PCD to PICC

8.1.1 Bit rate

The bit rate for the transmission during initialization and anticollision shall be *fc*/128 (~106 kbit/s).

8.1.2 Modulation

Communication from PCD to PICC for a bit rate of *fc*/128 shall use the modulation principle of ASK 100% of the RF operating field to create a “Pause” as shown in figure 2.

The envelope of the PCD field shall decrease monotonically to less than 5% of its initial value $H_{INITIAL}$ and remain less than 5% for more than t2. This envelope shall comply to figure 2.

© ISO/IEC 2001 – All rights reserved
Copyright International Organization for Standardization
Provided by IHS under license with ISO
No reproduction or networking permitted without license from IHS
Not for Resale

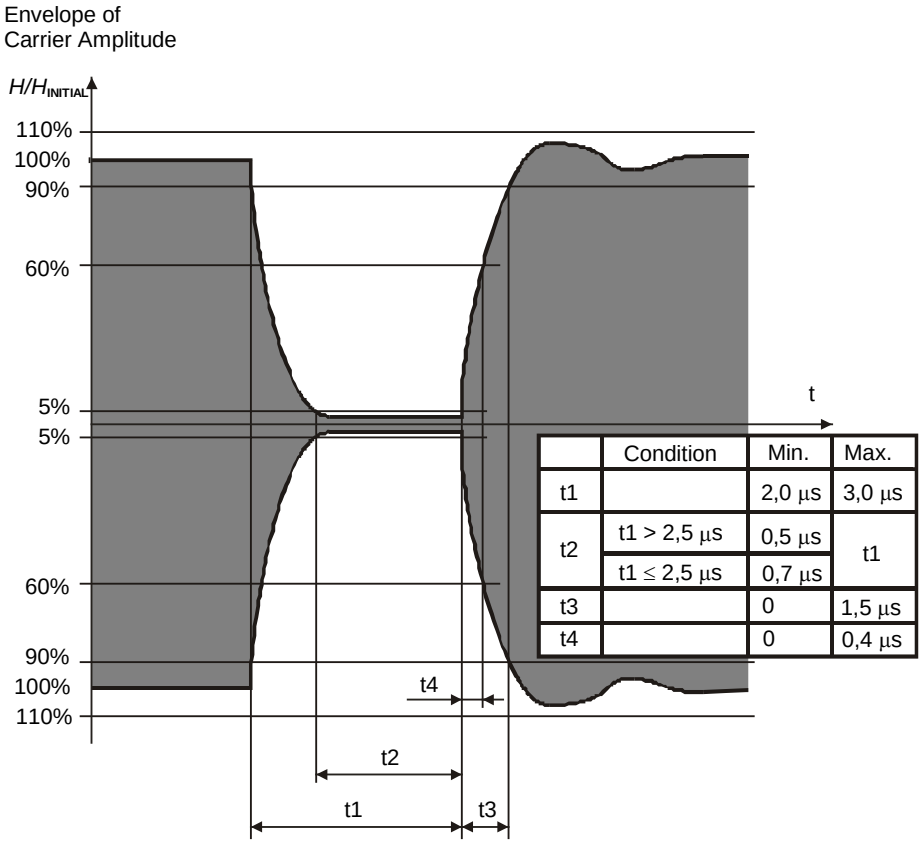

	Condition	Min.	Max.
t1		2,0 μs	3,0 μs
t2	t1 > 2,5 μs	0,5 μs	t1
	t1 ≤ 2,5 μs	0,7 μs	
t3		0	1,5 μs
t4		0	0,4 μs

Figure 2 — Pause

If the envelope of the PCD field does not decrease monotonically, the time between a local maximum and the time of passing the same value before the local maximum shall not exceed 0,5 μs. This shall only apply if the local maximum is greater than 5% of $H_{INITIAL}$.

Overshoots shall remain within 90% and 110% of $H_{INITIAL}$.

The PICC shall detect the ”End of Pause” after the field exceeds 5% of $H_{INITIAL}$ and before it exceeds 60% of $H_{INITIAL}$. Figure 3 shows the definition of the "End of Pause". This definition applies to all modulation envelope timings.

© ISO/IEC 2001 – All rights reserved

Copyright International Organization for Standardization
Provided by IHS under license with ISO
No reproduction or networking permitted without license from IHS
Not for Resale

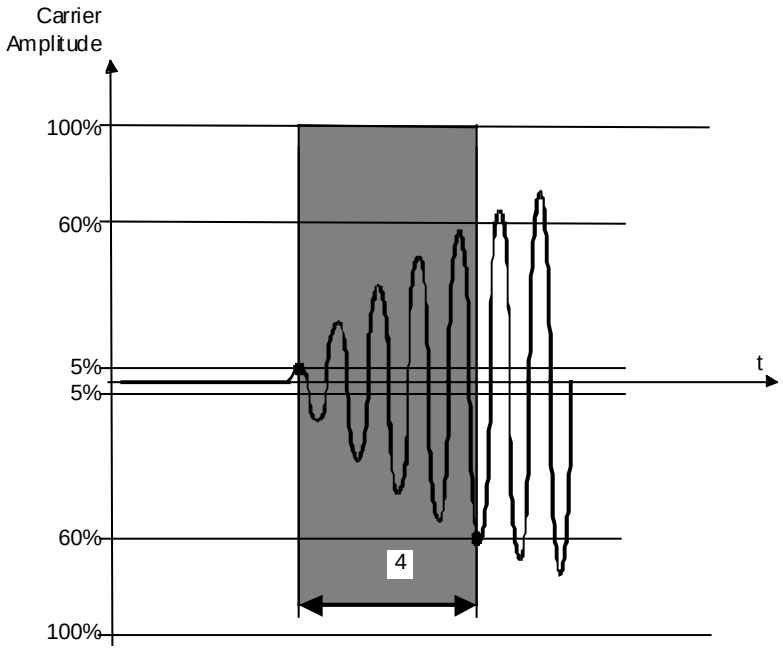

NOTE In systems designed to handle only one card at a time, t4 need not be respected.

Figure 3 — Definition of "End of Pause"

8.1.3 Bit representation and coding

The following sequences are defined:

— sequence X: after a time of half the bit duration a "Pause" shall occur.

— sequence Y: for the full bit duration no modulation shall occur.

— sequence Z: at the beginning of the bit duration a “Pause” shall occur.

The above sequences shall be used to code the following information:

— logic “1”: sequence X.

— logic “0”: sequence Y with the following two exceptions:

i) If there are two or more contiguous “0”s, sequence Z shall be used from the second “0” on.

ii) If the first bit after a “start of frame” is “0”, sequence Z shall be used to represent this and any “0”s which follow directly thereafter.

— start of communication: sequence Z.

— end of communication: logic “0" followed by sequence Y.

— no information: at least two sequences Y.

© ISO/IEC 2001 – All rights reserved
Copyright International Organization for Standardization
Provided by IHS under license with ISO
No reproduction or networking permitted without license from IHS
Not for Resale

8.2 Communication PICC to PCD

8.2.1 Bit rate

The bit rate for the transmission during initialization and anticollision shall be *fc*/128 (~106 kbit/s).

8.2.2 Load modulation

The PICC shall be capable of communication to the PCD via an inductive coupling area where the carrier frequency is loaded to generate a subcarrier with frequency *fs*. The subcarrier shall be generated by switching a load in the PICC.

The load modulation amplitude shall be at least $30/H^{1,2}$ (mVpeak) when measured as described in ISO/IEC 10373-6, where *H* is the (rms) value of magnetic field strength in A/m.

8.2.3 Subcarrier

The frequency *fs* of the subcarrier shall be *fc*/16 (~847 kHz). Consequently, during initialization and anticollision, one bit duration is equivalent to 8 periods of the subcarrier.

8.2.4 Subcarrier modulation

Every bit period shall start with a defined phase relation to the subcarrier. The bit period shall start with the loaded state of the subcarrier.

The subcarrier is modulated using OOK with the sequences defined in 8.2.5.

8.2.5 Bit representation and coding

The following sequences are defined :

- sequence D: the carrier shall be modulated with the subcarrier for the first half (50%) of the bit duration.
- sequence E: the carrier shall be modulated with the subcarrier for the second half (50%) of the bit duration.
- sequence F: the carrier is not modulated with the subcarrier for one bit duration.

Bit coding shall be Manchester with the following definitions:

- logic “1”: sequence D
- logic “0”: sequence E
- start of communication: sequence D
- end of communication: sequence F
- no information: no subcarrier

© ISO/IEC 2001 – All rights reserved

Copyright International Organization for Standardization
Provided by IHS under license with ISO
No reproduction or networking permitted without license from IHS
Not for Resale

9 Communication signal interface Type B

9.1 Communication PCD to PICC

9.1.1 Bit rate

The bit rate for the transmission during initialization and anticollision shall be nominally *fc*/128 (~106 kbit/s). Tolerance and bit boundaries are defined in ISO/IEC 14443-3.

9.1.2 Modulation

Communication from PCD to PICC shall use the modulation principle of ASK 10% of the RF operating field.

The modulation index shall be between 8% and 14%.

The modulation waveform shall comply to figure 4. The rising and falling edges of the modulation shall be monotonic.

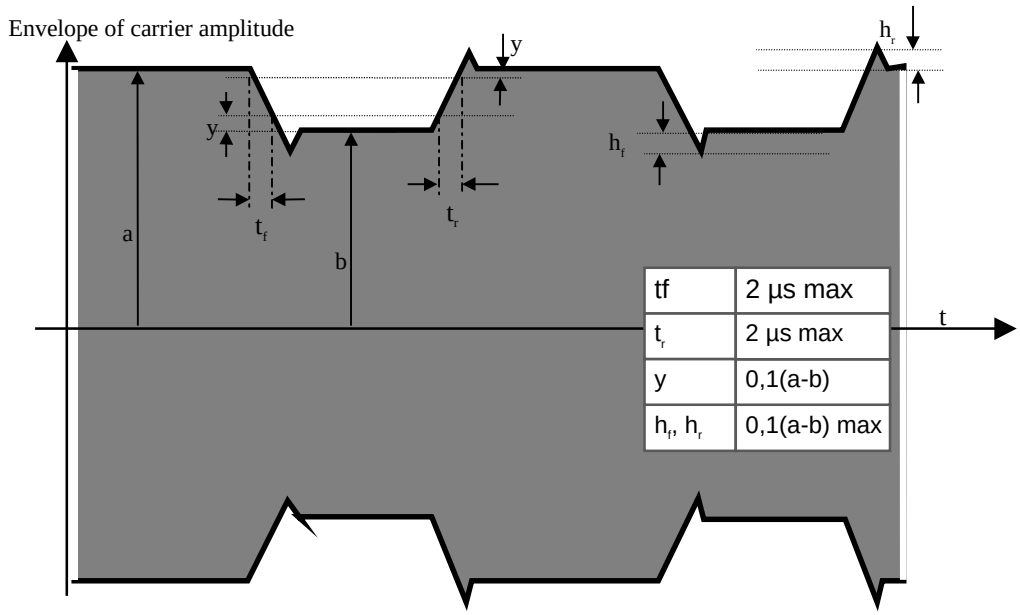

Figure 4 — Type B modulation waveform

9.1.3 Bit representation and coding

Bit coding format shall be NRZ-L with logic levels defined as follows:

— logic “1”: carrier high field amplitude (no modulation applied).

— logic “0”: carrier low field amplitude.

Copyright International Organization for Standardization
Provided by IHS under license with ISO
No reproduction or networking permitted without license from IHS
Not for Resale
© ISO/IEC 2001 – All rights reserved

9.2 Communication PICC to PCD

9.2.1 Bit rate

The bit rate for the transmission during initialization and anticollision shall be nominally *fc*/128 (~106 kbit/s).

9.2.2 Load modulation

The PICC shall be capable of communication to the PCD via an inductive coupling area where the carrier frequency is loaded to generate a subcarrier with frequency *fs*. The subcarrier shall be generated by switching a load in the PICC.

The load modulation amplitude shall be at least $30/H^{1,2}$ (mVpeak) when measured as described in ISO/IEC 10373-6, where *H* is the (rms) value of magnetic field strength in A/m.

9.2.3 Subcarrier

The frequency *f*s of the subcarrier shall be *f*s/16 (~847 kHz). Consequently, during initialization and anticollision, one bit period is equivalent to 8 periods of the subcarrier.

The PICC shall generate a subcarrier only when data is to be transmitted.

9.2.4 Subcarrier modulation

The subcarrier shall be BPSK modulated, see example in figure 5. Phase shifts shall only occur at nominal positions of rising or falling edges of the subcarrier.

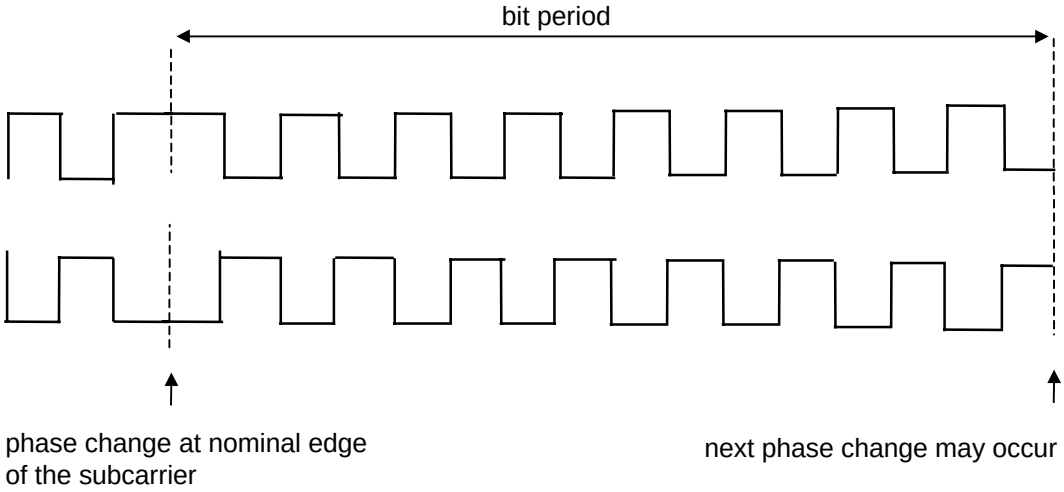

Figure 5 — Allowed phase shifts (PICC internal subcarrier load switching)

9.2.5 Bit representation and coding

Bit coding shall be NRZ-L where a change of logic level shall be denoted by a phase shift (180°) of the subcarrier.

The initial logic level for NRZ-L at the start of a PICC frame shall be established by the following sequence:

© ISO/IEC 2001 – All rights reserved

Copyright International Organization for Standardization
Provided by IHS under license with ISO
No reproduction or networking permitted without license from IHS
Not for Resale

— After any command from the PCD a guard time TR0 shall apply in which the PICC shall not generate a subcarrier. TR0 shall be greater than 64/*f*s.

— The PICC shall then generate a subcarrier with no phase transition for a synchronization time TR1. This establishes a subcarrier phase reference Ø0. TR1 shall be greater than 80/*f*s.

— This initial phase state Ø0 of the subcarrier shall be defined as logic “1” so that the first phase transition represents a change from logic “1” to logic “0”.

— Subsequently the logic level is defined according to the subcarrier phase reference:

Ø0: represents logic "1"

Ø0 + 180°: represents logic "0".

10 PICC minimal coupling zone

The PICC coupling antenna may have any form and location but shall encircle the zone shown in figure 6.

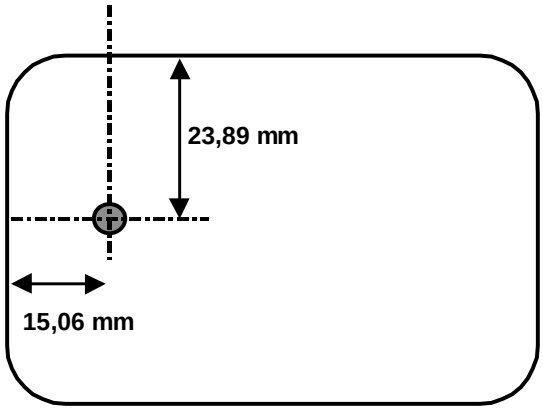

Upper and left edges are defined in ISO/IEC 7816-2. The shaded area is the zone of diameter 5,0 mm.

Figure 6 — PICC minimal coupling zone

© ISO/IEC 2001 – All rights reserved
Copyright International Organization for Standardization
Provided by IHS under license with ISO
No reproduction or networking permitted without license from IHS
Not for Resale

Annex A
(informative)

Compatibility with other card standards

This part of ISO/IEC 14443 does not preclude the addition of other existing card standards on the PICC, such as those listed as follows:

ISO/IEC 7811 (all parts), *Identification cards – Recording technique*

ISO/IEC 7812 (all parts), *Identification cards – Identification of issuers*

ISO/IEC 7813, *Identification cards – Financial transaction cards*

ISO/IEC 7816 (all parts), *Identification cards – Integrated circuit(s) cards with contacts*

ISO/IEC 10536 (all parts), *Identification cards – Contactless integrated circuit(s) cards – Close-coupled cards*

ISO/IEC 15693 (all parts), *Identification cards – Contactless integrated circuit(s) cards – Vicinity cards*

--`,,```,,,,````-`-`,,`,,`,`,,`---

© ISO/IEC 2001 – All rights reserved

Copyright International Organization for Standardization
Provided by IHS under license with ISO
No reproduction or networking permitted without license from IHS
Not for Resale

ICS 35.240.15

Price based on 11 pages

© ISO/IEC 2001 – All rights reserved

Copyright International Organization for Standardization
Provided by IHS under license with ISO
No reproduction or networking permitted without license from IHS

Not for Resale