# ISO/IEC 14165-251

Edition 1.0 2008-01

# INTERNATIONAL STANDARD

## Information technology – Fibre channel – Part 251: Framing and signalling (FC-FS)



ISO/IEC 14165-251:2008(E)

Copyright International Organization for Standardization
Provided by IHS under license with ISO
No reproduction or networking permitted without license from IHS
Not for Resale

**THIS PUBLICATION IS COPYRIGHT PROTECTED**

**Copyright © 2008 ISO/IEC, Geneva, Switzerland**

All rights reserved. Unless otherwise specified, no part of this publication may be reproduced or utilized in any form or by any means, electronic or mechanical, including photocopying and microfilm, without permission in writing from either IEC or IEC's member National Committee in the country of the requester.

If you have any questions about ISO/IEC copyright or have an enquiry about obtaining additional rights to this publication, please contact the address below or your local IEC member National Committee for further information.

IEC Central Office
3, rue de Varembé
CH-1211 Geneva 20
Switzerland
Email: inmail@iec.ch
Web: www.iec.ch

## About the IEC

The International Electrotechnical Commission (IEC) is the leading global organization that prepares and publishes International Standards for all electrical, electronic and related technologies.

## About IEC publications

The technical content of IEC publications is kept under constant review by the IEC. Please make sure that you have the latest edition, a corrigenda or an amendment might have been published.

- Catalogue of IEC publications: www.iec.ch/searchpub

The IEC on-line Catalogue enables you to search by a variety of criteria (reference number, text, technical committee,…). It also gives information on projects, withdrawn and replaced publications.

- IEC Just Published: www.iec.ch/online_news/justpub

Stay up to date on all new IEC publications. Just Published details twice a month all new publications released. Available on-line and also by email.

- Electropedia: www.electropedia.org

The world's leading online dictionary of electronic and electrical terms containing more than 20 000 terms and definitions in English and French, with equivalent terms in additional languages. Also known as the International Electrotechnical Vocabulary online.

- Customer Service Centre: www.iec.ch/webstore/custserv

If you wish to give us your feedback on this publication or need further assistance, please visit the Customer Service Centre FAQ or contact us:

Email: csc@iec.ch
Tel.: +41 22 919 02 11
Fax: +41 22 919 03 00

Copyright International Organization for Standardization
Provided by IHS under license with ISO
No reproduction or networking permitted without license from IHS
Not for Resale

# ISO/IEC 14165-251

Edition 1.0 2008-01

# INTERNATIONAL STANDARD

## Information technology – Fibre channel – Part 251: Framing and signalling (FC-FS)

INTERNATIONAL ELECTROTECHNICAL COMMISSION

PRICE CODE XL

ICS 35.200

ISBN 2-8318-9483-2

--`,,```,,,,````-`-`,,`,,`,`,,`---

Copyright International Organization for Standardization
Provided by IHS under license with ISO
No reproduction or networking permitted without license from IHS

Not for Resale

--`,,```,,,,````-`-`,,`,,`,`,,`---

Copyright International Organization for Standardization
Provided by IHS under license with ISO
No reproduction or networking permitted without license from IHS
Not for Resale

## Contents

**FOREWORD** - - - - - **37**
**INTRODUCTION** - - - - - **40**

**1 Scope** - - - - - **41**
**2 Normative references** - - - - - **41**
2.1 Approved references - - - - - 41
2.2 References under development - - - - - 41
2.3 Other references - - - - - 41
**3 Definitions, abbreviations, conventions and keywords** - - - - - **43**
3.1 Definitions - - - - - 43
3.2 Editorial conventions - - - - - 50
3.3 Abbreviations, acronyms and symbols - - - - - 51
3.3.1 Data rate abbreviations - - - - - 51
3.3.2 Acronyms and other abbreviations - - - - - 51
3.3.3 Symbols - - - - - 55
3.4 Keywords - - - - - 55

**4 Structure and Concepts** - - - - - **57**
4.1 Introduction - - - - - 57
4.2 FC-1 general description - - - - - 58
4.3 FC-2 general description - - - - - 59
4.4 FC-FS physical model - - - - - 60
4.5 Communication models - - - - - 60
4.5.1 Introduction - - - - - 60
4.5.2 Hunt Group - - - - - 61
4.5.3 Fractional bandwidth - - - - - 62
4.6 Bandwidth - - - - - 62
4.7 Topology - - - - - 62
4.7.1 Types - - - - - 62
4.7.2 Point-to-point topology - - - - - 62
4.7.3 Fabric topology - - - - - 62
4.7.4 Arbitrated Loop topology - - - - - 63
4.8 Classes of service - - - - - 63
4.8.1 General - - - - - 63
4.8.2 Class 1 service - dedicated connection - - - - - 64
4.8.3 Class 2 service - multiplex - - - - - 64
4.8.4 Class 3 service - datagram - - - - - 64
4.8.5 Class 4 service – fractional bandwidth - - - - - 65
4.8.6 Class 6 – multicast connection - - - - - 65
4.9 Intermixing other classes with Class 1 or Class 6 - - - - - 65
4.10 General Fabric model - - - - - 66
4.10.1 General - - - - - 66
4.10.2 Fabric Ports (F_Ports) - - - - - 66
4.10.3 Connection Service - - - - - 68
4.10.4 Connectionless Service - - - - - 68
4.11 Fibre Channel services - - - - - 69
4.12 Building Blocks - - - - - 69
4.12.1 Building block hierarchy - - - - - 69
4.12.2 Frame - - - - - 70
4.12.3 Sequence - - - - - 70
4.12.3.1 Introduction - - - - - 70
4.12.3.2 Sequence_Identifier (SEQ_ID) - - - - - 70
4.12.3.3 Sequence Status Blocks - - - - - 70
4.12.4 Exchange - - - - - 71
4.12.4.1 Introduction - - - - - 71

Copyright International Organization for Standardization
Provided by IHS under license with ISO
No reproduction or networking permitted without license from IHS
Not for Resale

4.12.4.2 Exchange_Identifiers (OX_ID and RX_ID) - - - - - - - - - - - - - - - - - - - - - - - - - - - - - 71
4.12.4.3 Association_Header - - - - - - - - - - - - - - - - - - - - - - - - - - - - - - - - - - - - - - - - - - - 71
4.12.4.4 Exchange Status Blocks - - - - - - - - - - - - - - - - - - - - - - - - - - - - - - - - - - - - - - - 71
4.12.5 Exchange of service parameters - - - - - - - - - - - - - - - - - - - - - - - - - - - - - - - - - - - 71
4.13 Segmentation and reassembly - - - - - - - - - - - - - - - - - - - - - - - - - - - - - - - - - - - - - - - 72
4.13.1 General - - - - - - - - - - - - - - - - - - - - - - - - - - - - - - - - - - - - - - - - - - - - - - - - - - 72
4.13.2 Application data mapping - - - - - - - - - - - - - - - - - - - - - - - - - - - - - - - - - - - - - - 72
4.13.3 Relative offset - - - - - - - - - - - - - - - - - - - - - - - - - - - - - - - - - - - - - - - - - - - - - 72
4.13.4 Sending end mapping - - - - - - - - - - - - - - - - - - - - - - - - - - - - - - - - - - - - - - - - - 72
4.13.5 Capability - - - - - - - - - - - - - - - - - - - - - - - - - - - - - - - - - - - - - - - - - - - - - - - - 72
4.13.6 FC-2 mapping - - - - - - - - - - - - - - - - - - - - - - - - - - - - - - - - - - - - - - - - - - - - - 73
4.13.7 Segmentation - - - - - - - - - - - - - - - - - - - - - - - - - - - - - - - - - - - - - - - - - - - - - - 73
4.13.8 Reassembly - - - - - - - - - - - - - - - - - - - - - - - - - - - - - - - - - - - - - - - - - - - - - - - 73
4.14 Error detection and recovery - - - - - - - - - - - - - - - - - - - - - - - - - - - - - - - - - - - - - - - 73

**5 FC-1 8B/10B transmission code - - - - - - - - - - - - - - - - - - -

6.1.4.2.2 Achieving Word Synchronization - - - - - - - - - - - - - - - - - - - - - - - - - - - - - - - - 90
6.1.4.2.3 Word alignment methods - - - - - - - - - - - - - - - - - - - - - - - - - - - - - - - - - - - - 90
6.1.4.2.3.1 Continuous-mode alignment - - - - - - - - - - - - - - - - - - - - - - - - - - - - - - 90
6.1.4.2.3.2 Explicit-mode alignment - - - - - - - - - - - - - - - - - - - - - - - - - - - - - - - - 90
6.1.5 Loss of Word Synchronization - - - - - - - - - - - - - - - - - - - - - - - - - - - - - - - - - - - - - 90
6.1.5.1 Introduction - - - - - - - - - - - - - - - - - - - - - - - - - - - - - - - - - - - - - - - - - - - - - - 90
6.1.5.2 Detection of loss of Signal - - - - - - - - - - - - - - - - - - - - - - - - - - - - - - - - - - - - 91
6.1.5.3 Detection of an invalid Transmission Word - - - - - - - - - - - - - - - - - - - - - - - - - - 91
6.1.6 State transitions - - - - - - - - - - - - - - - - - - - - - - - - - - - - - - - - - - - - - - - - - - - - - 91
6.1.6.1 Default State - - - - - - - - - - - - - - - - - - - - - - - - - - - - - - - - - - - - - - - - - - - - - 91
6.1.6.2 State A (Loss of Synchronization) - - - - - - - - - - - - - - - - - - - - - - - - - - - - - - - 91
6.1.6.3 State B (Word Synchronization Acquired) - - - - - - - - - - - - - - - - - - - - - - - - - - - 91
6.1.6.3.1 State B.1 (No Invalid Transmission Word Detected State) - - - - - - - - - - - - - 92
6.1.6.3.2 State B.2 (First Invalid Transmission Word Detected State) - - - - - - - - - - - - 92
6.1.6.3.3 State B.3 (Second Invalid Transmission Word Detected State) - - - - - - - - - - 92
6.1.6.3.4 State B.4 (Third Invalid Transmission Word Detection State) - - - - - - - - - - - 92
6.1.6.4 State C (Reset) - - - - - - - - - - - - - - - - - - - - - - - - - - - - - - - - - - - - - - - - - - - 92
6.2 Transmitter - - - - - - - - - - - - - - - - - - - - - - - - - - - - - - - - - - - - - - - - - - - - - - - - - - 93
6.2.1 State Diagram - - - - - - - - - - - - - - - - - - - - - - - - - - - - - - - - - - - - - - - - - - - - - - 93
6.2.2 Operational condition - - - - - - - - - - - - - - - - - - - - - - - - - - - - - - - - - - - - - - - - 93
6.2.3 State Transitions - - - - - - - - - - - - - - - - - - - - - - - - - - - - - - - - - - - - - - - - - - - - 93
6.2.3.1 Not Enabled State - - - - - - - - - - - - - - - - - - - - - - - - - - - - - - - - - - - - - - - - - 93
6.2.3.2 Working State - - - - - - - - - - - - - - - - - - - - - - - - - - - - - - - - - - - - - - - - - - - - 94
6.2.3.3 Failure State - - - - - - - - - - - - - - - - - - - - - - - - - - - - - - - - - - - - - - - - - - - - 94
**7 FC_Port state machine - - - - - - - - - - - - - - - - - - -

7.5.3.1 General ---- 100
7.5.3.2 Class 4 behavior ---- 100
7.5.4 Wait for OLS State (OL3) ---- 100
7.5.4.1 Actions applicable to all classes ---- 100
7.5.4.2 Class 4 behavior ---- 101
7.6 Primitive Sequence protocols ---- 101
7.6.1 Functions ---- 101
7.6.2 Link Initialization protocol ---- 101
7.6.3 Link Reset protocol ---- 101
7.6.4 Link Failure protocol ---- 101
7.6.5 Online-to-offline protocol ---- 102

**8 Frame formats ---- 103**
8.1 General frame format ---- 103
8.2 Frame transmission ---- 103
8.3 Start-of-Frame (SOF) delimiter ---- 103
8.3.1 Introduction ---- 103
8.3.2 SOF Connect Class 1 or 6 (SOFc1) ---- 104
8.3.3 SOF Circuit Activate Class 4 (SOFc4) ---- 104
8.3.4 SOF Initiate (SOFix) ---- 104
8.3.4.1 Applicability ---- 104
8.3.4.2 SOF Initiate Class 1 or 6 (SOFi1) ---- 104
8.3.4.3 SOF Initiate Class 2 (SOFi2) ---- 104
8.3.4.4 SOF Initiate Class 3 (SOFi3) ---- 104
8.3.4.5 SOF Initiate Class 4 (SOFi4) ---- 104
8.3.5 SOF Normal (SOFnx) ---- 104
8.3.5.1 Applicability ---- 104
8.3.5.2 SOF Normal Class 1 or 6 (SOFn1) ---- 104
8.3.5.3 SOF Normal Class 2 (SOFn2) ---- 104
8.3.5.4 SOF Normal Class 3 (SOFn3) ---- 104
8.3.5.5 SOF Normal Class 4 (SOFn4) ---- 105
8.3.6 SOF Fabric (SOFf) ---- 105
8.4 Frame_Header ---- 105
8.5 Data Field ---- 105
8.6 CRC ---- 105
8.7 End-of-Frame (EOF) delimiter ---- 106
8.7.1 Introduction ---- 106
8.7.2 Valid frame content ---- 106
8.7.2.1 EOF Normal (EOFn) ---- 106
8.7.2.2 EOF Terminate (EOFt) ---- 106
8.7.2.3 EOF Disconnect Terminate (EOFdt) (Class 1 or Class 6) ---- 106
8.7.2.4 EOF Deactivate Terminate (EOFdt) (Class 4) ---- 107
8.7.2.5 EOF Remove Terminate (EOFrt) ---- 107
8.7.3 Invalid frame content ---- 107
8.7.3.1 General ---- 107
8.7.3.2 End of Frame Abort (EOFa) ---- 107
8.7.3.3 EOF Disconnect Terminate Invalid (EOFdti) (Class 1 and Class 6) ---- 108
8.7.3.4 EOF Deactivate Terminate Invalid (EOFdti) (Class 4) ---- 108
8.7.3.5 EOF Remove Terminate Invalid (EOFrti) ---- 108
8.7.3.6 EOF Invalid (EOFni) ---- 108
8.8 Frame field order ---- 108
8.9 Frame reception ---- 110
8.9.1 Rules ---- 110
8.9.2 Frame validity ---- 110
8.9.3 Invalid frame processing ---- 110

**9 Frame_Header ---- 111**
9.1 Introduction ---- 111

--`,,```,,,,````-`-,,`,,`,`,,`---

Copyright International Organization for Standardization
Provided by IHS under license with ISO
No reproduction or networking permitted without license from IHS Not for Resale

9.2 Identification ---------- 111
9.2.1 Frame identification ---------- 111
9.2.2 Sequence identification ---------- 111
9.3 Routing Control (R_CTL) ---------- 112
9.3.1 Introduction ---------- 112
9.3.2 ROUTING Field ---------- 112
9.3.3 INFORMATION Field ---------- 112
9.4 Address identifiers (D_ID, S_ID) ---------- 114
9.4.1 General ---------- 114
9.4.2 Reserved address identifiers ---------- 114
9.4.3 Destination_ID (D_ID) ---------- 114
9.4.4 Source_ID (S_ID) ---------- 114
9.5 Class Specific Control (CS_CTL)/Priority ---------- 115
9.5.1 Introduction ---------- 115
9.5.2 CS_CTL ---------- 115
9.5.2.1 General ---------- 115
9.5.2.2 Class 1 and Class 6 ---------- 115
9.5.2.3 Class 2 ---------- 116
9.5.2.4 Class 3 ---------- 116
9.5.2.5 Class 4 ---------- 117
9.5.3 Priority ---------- 118
9.5.3.1 Introduction ---------- 118
9.5.3.2 Class 1 and Class 6 ---------- 118
9.5.3.3 Class 2 and Class 3 ---------- 119
9.5.3.4 Class 4 ---------- 119
9.6 Data structure type (TYPE) ---------- 120
9.7 Frame Control (F_CTL) ---------- 122
9.7.1 Introduction ---------- 122
9.7.2 Exchange Context ---------- 122
9.7.3 Sequence Context ---------- 124
9.7.4 First_Sequence ---------- 125
9.7.5 Last_Sequence ---------- 125
9.7.6 End_Sequence ---------- 125
9.7.7 End_Connection (E_C) (Class 1 or 6) or Deactivate Class 4 circuit ---------- 125
9.7.8 CS_CTL/Priority Enable ---------- 125
9.7.9 Sequence Initiative ---------- 126
9.7.10 ACK_Form ---------- 126
9.7.11 Retransmitted Sequence ---------- 126
9.7.12 Unidirectional Transmit or Remove_Connection ---------- 126
9.7.13 Continue Sequence Condition ---------- 127
9.7.14 Abort Sequence Condition ---------- 127
9.7.15 Relative offset present ---------- 128
9.7.16 Exchange reassembly ---------- 129
9.7.17 Fill Data Bytes ---------- 129
9.7.18 F_CTL bits on Data frames ---------- 129
9.7.19 F_CTL bits on Link_Control frames ---------- 130
9.8 Sequence_ID (SEQ_ID) ---------- 132
9.9 Data Field Control (DF_CTL) ---------- 132
9.10 Sequence count (SEQ_CNT) ---------- 133
9.11 Originator Exchange_ID (OX_ID) ---------- 133
9.12 Responder Exchange_ID (RX_ID) ---------- 134
9.13 Parameter ---------- 134

**10 Optional headers ---------- 135**
10.1 Introduction ---------- 135
10.2 ESP_Header ---------- 136
10.3 Network_Header ---------- 138

Copyright International Organization for Standardization
Provided by IHS under license with ISO
No reproduction or networking permitted without license from IHS Not for Resale

10.4 Association_Header - - - - - 139
10.4.1 Introduction - - - - - 139
10.4.2 Process_Associators - - - - - 140
10.4.2.1 Originator and Responder Process_Associators - - - - - 140
10.4.2.2 Multicast Process_Associator - - - - - 140
10.4.2.3 Operation_Associators - - - - - 141
10.5 Device_Header - - - - - 141

**11 Data frames and responses - - - - - 142**
11.1 Data frames - - - - - 142
11.1.1 Introduction - - - - - 142
11.1.2 Frame Delimiters - - - - - 142
11.1.3 Addressing - - - - - 142
11.1.4 Data Field - - - - - 143
11.1.5 Payload size - - - - - 143
11.1.6 Responses - - - - - 143
11.1.6.1 R_RDY response - - - - - 143
11.1.6.2 Data frame responses - - - - - 143
11.1.6.2.1 Introduction - - - - - 143
11.1.6.2.2 ACK frames - successful Data frame delivery - - - - - 143
11.1.6.3 Link_Response frames - Unsuccessful Data frame delivery - - - - - 144
11.2 Link_Control Frames - - - - - 144
11.2.1 Introduction - - - - - 144
11.2.2 Link_Continue function - - - - - 146
11.2.2.1 Introduction - - - - - 146
11.2.2.2 Receiver Ready (R_RDY) - - - - - 146
11.2.2.3 Acknowledge (ACK) - - - - - 147
11.2.2.3.1 General - - - - - 147
11.2.2.3.2 ACK_1 - - - - - 148
11.2.2.3.3 ACK_0 - - - - - 148
11.2.2.3.4 Header definition for all ACK forms - - - - - 148
11.2.2.3.4.1 Addressing - - - - - 148
11.2.2.3.4.2 F_CTL - - - - - 148
11.2.2.3.4.3 SEQ_ID - - - - - 148
11.2.2.3.4.4 SEQ_CNT - - - - - 148
11.2.2.3.4.5 Parameter field - - - - - 149
11.2.2.3.5 Responses - - - - - 149
11.2.3 Link_Response - - - - - 149
11.2.3.1 Introduction - - - - - 149
11.2.3.2 Fabric Busy (F_BSY) - - - - - 149
11.2.3.2.1 Description - - - - - 149
11.2.3.2.2 Responses - - - - - 150
11.2.3.3 N_Port Busy (P_BSY) - - - - - 150
11.2.3.3.1 Description - - - - - 150
11.2.3.3.2 Responses - - - - - 152
11.2.3.4 Reject (P_RJT, F_RJT) - - - - - 152
11.2.3.4.1 Introduction - - - - - 152
11.2.3.4.2 Class 4 - - - - - 153
11.2.3.4.3 Parameter field - - - - - 153
11.2.3.4.3.1 Reject Code format - - - - - 153
11.2.3.4.3.2 Invalid D_ID - - - - - 156
11.2.3.4.3.3 Invalid S_ID - - - - - 156
11.2.3.4.3.4 Nx_Port not available, temporary - - - - - 156
11.2.3.4.3.5 Nx_Port not available, permanent - - - - - 156
11.2.3.4.3.6 Class not supported - - - - - 156
11.2.3.4.3.7 Delimiter usage error - - - - - 156
11.2.3.4.3.8 TYPE not supported - - - - - 157

Copyright International Organization for Standardization
Provided by IHS under license with ISO
No reproduction or networking permitted without license from IHS Not for Resale

11.2.3.4.3.9 Invalid Link_Control ---- 157
11.2.3.4.3.10 Invalid R_CTL field ---- 157
11.2.3.4.3.11 Invalid F_CTL field ---- 157
11.2.3.4.3.12 Invalid OX_ID ---- 157
11.2.3.4.3.13 Invalid RX_ID ---- 157
11.2.3.4.3.14 Invalid SEQ_ID ---- 157
11.2.3.4.3.15 Invalid DF_CTL ---- 157
11.2.3.4.3.16 Invalid SEQ_CNT ---- 157
11.2.3.4.3.17 Invalid Parameter field ---- 157
11.2.3.4.3.18 Exchange Error ---- 157
11.2.3.4.3.19 Protocol Error ---- 157
11.2.3.4.3.20 Incorrect length ---- 157
11.2.3.4.3.21 Unexpected ACK ---- 158
11.2.3.4.3.22 Class of service not supported by entity at hex 'FF FF FE' ---- 158
11.2.3.4.3.23 Login Required ---- 158
11.2.3.4.3.24 Excessive Sequences attempted ---- 158
11.2.3.4.3.25 Unable to Establish Exchange ---- 158
11.2.3.4.3.26 Fabric path not available ---- 158
11.2.3.4.3.27 Invalid VC_ID (Class 4) ---- 158
11.2.3.4.3.28 Invalid CS_CTL Field ---- 158
11.2.3.4.3.29 Insufficient resources for VC (Class 4) ---- 158
11.2.3.4.3.30 Invalid class of service ---- 158
11.2.3.4.3.31 Preemption request rejected ---- 158
11.2.3.4.3.32 Preemption not enabled ---- 158
11.2.3.4.3.33 Multicast error ---- 159
11.2.3.4.3.34 Multicast error terminate ---- 159
11.2.3.4.3.35 Vendor Specific Reject ---- 159
11.2.3.4.3.36 Responses ---- 159
11.2.4 Link_Control commands ---- 159
11.2.4.1 Introduction ---- 159
11.2.4.2 Link Credit Reset (LCR) ---- 159
11.2.4.2.1 Description ---- 159
11.2.4.2.2 Protocol ---- 160
11.2.4.2.3 Request Sequence ---- 160
11.2.4.2.4 Responses ---- 160
11.2.4.3 End (END) ---- 160
11.2.4.3.1 Description ---- 160
11.2.4.3.2 Protocol ---- 161
11.2.4.3.3 Request Sequence ---- 161
11.2.4.3.4 Reply Sequence ---- 161
11.3 ACK generation assistance ---- 161
11.3.1 Introduction ---- 161
11.3.2 N_Port Login ---- 161
11.3.2.1 Capability Indicator ---- 161
11.3.3 Applicability ---- 161
11.3.4 F_CTL bits ---- 161
11.3.5 Login rules ---- 161
11.3.6 ACK_Form errors ---- 162

**12 Link Services ---- 163**
12.1 Sequence and Exchange management ---- 163
12.2 Basic Link Service commands ---- 163
12.2.1 Introduction ---- 163
12.2.2 Abort Sequence (ABTS) ---- 164
12.2.2.1 Overview ---- 164
12.2.2.2 Aborting Sequences using ABTS ---- 165
12.2.2.2.1 Introduction ---- 165

Copyright International Organization for Standardization
Provided by IHS under license with ISO
No reproduction or networking permitted without license from IHS Not for Resale

12.2.2.2.2 ABTS Initiator - - - - - 165
12.2.2.2.3 ABTS Recipient - - - - - 165
12.2.2.2.4 Recovery Qualifier - - - - - 166
12.2.2.2.5 Protocol - - - - - 166
12.2.2.2.6 Request Sequence - - - - - 166
12.2.2.2.7 Reply Sequence - - - - - 167
12.2.2.3 Aborting Exchanges using ABTS - - - - - 167
12.2.2.3.1 Introduction - - - - - 167
12.2.2.3.2 ABTS sent by the last Sequence Initiator in an open Sequence - - - - - 168
12.2.2.3.3 ABTS sent by the last Sequence Initiator in a new Sequence - - - - - 168
12.2.2.3.4 ABTS sent in an open or new Sequence - - - - - 168
12.2.2.3.5 ABTS by the last Sequence Recipient - - - - - 168
12.2.2.3.6 Request Sequence - - - - - 168
12.2.2.3.7 Reply Sequence - - - - - 169
12.2.3 Basic Accept (BA_ACC) - - - - - 170
12.2.3.1 Description - - - - - 170
12.2.3.2 Protocol - - - - - 170
12.2.3.3 Request Sequence - - - - - 170
12.2.3.4 Reply Sequence - - - - - 170
12.2.4 Basic Reject (BA_RJT) - - - - - 170
12.2.4.1 Description - - - - - 170
12.2.4.2 Protocol - - - - - 170
12.2.4.3 Request Sequence - - - - - 170
12.2.4.4 Reply Sequence - - - - - 171
12.2.5 No Operation (NOP) - - - - - 172
12.2.5.1 Description - - - - - 172
12.2.5.2 Protocol - - - - - 172
12.2.5.3 Request Sequence - - - - - 172
12.2.5.4 Reply Sequence - - - - - 172
12.2.6 Remove Connection (RMC) - - - - - 172
12.2.6.1 Description - - - - - 172
12.2.6.2 Protocol: - - - - - 173
12.2.6.3 Request Sequence - - - - - 173
12.2.6.4 Reply Sequence - - - - - 173
12.2.7 Dedicated connection preempted (PRMT) - - - - - 173
12.2.7.1 Description - - - - - 173
12.2.7.2 Protocol - - - - - 173
12.2.7.3 Request Sequence - - - - - 173
12.2.7.4 Reply Sequence - - - - - 173
12.3 Extended Link Services - - - - - 173
12.3.1 Introduction - - - - - 173
12.3.2 Extended Link Service requests - - - - - 174
12.3.2.1 Introduction - - - - - 174
12.3.2.2 Abort Exchange (ABTX) - - - - - 178
12.3.2.2.1 Description - - - - - 178
12.3.2.2.2 Protocol - - - - - 179
12.3.2.2.3 Request Sequence - - - - - 179
12.3.2.2.4 Reply Sequence - - - - - 180
12.3.2.3 Advise Credit (ADVC) - - - - - 180
12.3.2.3.1 Description - - - - - 180
12.3.2.3.2 Protocol - - - - - 180
12.3.2.3.3 Request Sequence - - - - - 180
12.3.2.3.4 Reply Sequence - - - - - 181
12.3.2.4 Echo (ECHO) - - - - - 182
12.3.2.4.1 Description - - - - - 182
12.3.2.4.2 Protocol - - - - - 182
12.3.2.4.3 Request Sequence - - - - - 183

Copyright International Organization for Standardization
Provided by IHS under license with ISO
No reproduction or networking permitted without license from IHS
Not for Resale

12.3.2.4.4 Reply Sequence ---------- 183
12.3.2.5 Estimate Credit (ESTC) ---------- 183
12.3.2.5.1 Description ---------- 183
12.3.2.5.2 Protocol ---------- 183
12.3.2.5.3 Request Sequence ---------- 184
12.3.2.5.4 Reply Sequence ---------- 184
12.3.2.6 Establish Streaming (ESTS) ---------- 184
12.3.2.6.1 Description ---------- 184
12.3.2.6.2 Protocol ---------- 184
12.3.2.6.3 Request Sequence ---------- 184
12.3.2.6.4 Reply Sequence ---------- 185
12.3.2.7 Login (FLOGI/PLOGI) ---------- 186
12.3.2.7.1 Description ---------- 186
12.3.2.7.2 Protocol ---------- 186
12.3.2.7.3 Request Sequence ---------- 186
12.3.2.7.4 Reply Sequence ---------- 186
12.3.2.8 Logout (LOGO) ---------- 186
12.3.2.8.1 Description ---------- 186
12.3.2.8.2 Protocol ---------- 187
12.3.2.8.3 Request Sequence ---------- 187
12.3.2.8.4 Reply Sequence ---------- 187
12.3.2.9 Read Connection Status (RCS) ---------- 187
12.3.2.9.1 Description ---------- 187
12.3.2.9.2 Protocol ---------- 187
12.3.2.9.3 Request Sequence ---------- 188
12.3.2.9.4 Reply Sequence ---------- 188
12.3.2.10 Read Exchange Status Block (RES) ---------- 189
12.3.2.10.1 Description ---------- 189
12.3.2.10.2 Protocol ---------- 190
12.3.2.10.3 Request Sequence ---------- 190
12.3.2.10.4 Reply Sequence ---------- 190
12.3.2.11 Read Link Error Status Block (RLS) ---------- 191
12.3.2.11.1 Description ---------- 191
12.3.2.11.2 Protocol ---------- 191
12.3.2.11.3 Request Sequence ---------- 191
12.3.2.11.4 Reply Sequence ---------- 191
12.3.2.12 Read Sequence Status Block (RSS) ---------- 191
12.3.2.12.1 Description ---------- 191
12.3.2.12.2 Protocol ---------- 192
12.3.2.12.3 Request Sequence ---------- 192
12.3.2.12.4 Reply Sequence ---------- 192
12.3.2.13 Read Timeout Value (RTV) ---------- 193
12.3.2.13.1 Description ---------- 193
12.3.2.13.2 Protocol ---------- 193
12.3.2.13.3 Request Sequence ---------- 193
12.3.2.13.4 Reply Sequence ---------- 193
12.3.2.14 Reinstate Recovery Qualifier (RRQ) ---------- 194
12.3.2.14.1 Description ---------- 194
12.3.2.14.2 Protocol ---------- 194
12.3.2.14.3 Request Sequence ---------- 194
12.3.2.14.4 Reply Sequence ---------- 195
12.3.2.15 Request Sequence Initiative (RSI) ---------- 195
12.3.2.15.1 Description ---------- 195
12.3.2.15.2 Protocol ---------- 196
12.3.2.15.3 Request Sequence ---------- 196
12.3.2.15.4 Reply Sequence ---------- 196
12.3.2.16 Test (TEST) ---------- 196

--`,,```,,,,````-`-`,,`,,`,`,,`---

Copyright International Organization for Standardization
Provided by IHS under license with ISO
No reproduction or networking permitted without license from IHS Not for Resale

12.3.2.16.1 Description ---------- 196
12.3.2.16.2 Protocol ---------- 197
12.3.2.16.3 Request Sequence ---------- 197
12.3.2.16.4 Reply Sequence ---------- 197
12.3.2.17 Report node Capability Information (RNC) ---------- 197
12.3.2.18 Fabric Address Notification (FAN) ---------- 197
12.3.2.18.1 Description ---------- 197
12.3.2.18.2 Protocol ---------- 198
12.3.2.18.3 Request Sequence ---------- 198
12.3.2.18.4 Reply Sequence ---------- 198
12.3.2.19 Loop Initialize (LINIT) ---------- 198
12.3.2.19.1 Description ---------- 198
12.3.2.19.2 Protocol ---------- 198
12.3.2.19.3 Request Sequence ---------- 198
12.3.2.19.4 Reply Sequence ---------- 199
12.3.2.20 Loop Port Control (LPC) (Obsolete) ---------- 200
12.3.2.21 Loop Status (LSTS) ---------- 200
12.3.2.21.1 Description ---------- 200
12.3.2.21.2 Protocol ---------- 200
12.3.2.21.3 Request Sequence ---------- 200
12.3.2.21.4 Reply Sequence ---------- 200
12.3.2.22 Registered State Change Notification (RSCN) ---------- 202
12.3.2.22.1 Introduction ---------- 202
12.3.2.22.2 RSCNs issued by the Fabric Controller ---------- 203
12.3.2.22.3 RSCN issued by the affected Nx_Port ---------- 203
12.3.2.22.4 RSCN initiative ---------- 203
12.3.2.22.5 RSCN registration ---------- 203
12.3.2.22.6 Protocol ---------- 203
12.3.2.22.7 Request Sequence ---------- 204
12.3.2.22.8 Reply Sequence ---------- 205
12.3.2.23 State Change Registration (SCR) ---------- 206
12.3.2.23.1 Description ---------- 206
12.3.2.23.2 Protocol ---------- 206
12.3.2.23.3 Request Sequence ---------- 206
12.3.2.23.4 Reply Sequence ---------- 207
12.3.2.24 Process login (PRLI) ---------- 207
12.3.2.24.1 Introduction ---------- 207
12.3.2.24.2 Protocol ---------- 207
12.3.2.24.3 Request Sequence ---------- 207
12.3.2.24.4 Reply Sequence ---------- 209
12.3.2.25 Process logout (PRLO) ---------- 211
12.3.2.25.1 Description ---------- 211
12.3.2.25.2 Protocol ---------- 211
12.3.2.25.3 Request Sequence ---------- 212
12.3.2.25.4 Reply sequence ---------- 213
12.3.2.26 State change notification (SCN) ---------- 216
12.3.2.27 Test Process Login State (TPLS) ---------- 216
12.3.2.27.1 Description ---------- 216
12.3.2.27.2 Protocol ---------- 216
12.3.2.27.3 Request Sequence ---------- 216
12.3.2.27.4 Reply sequence ---------- 218
12.3.2.28 Fibre Channel Address Resolution Protocol Request (FARP_REQ) ---------- 220
12.3.2.28.1 Description ---------- 220
12.3.2.28.2 Protocol ---------- 220
12.3.2.28.3 Request Sequence ---------- 220
12.3.2.28.4 Reply Sequence ---------- 224
12.3.2.29 Fibre Channel Address Resolution Protocol Reply (FARP_REPLY) ---------- 224

--`,,```,,,,````-`-`,,`,,`,`,,`---

Copyright International Organization for Standardization
Provided by IHS under license with ISO
No reproduction or networking permitted without license from IHS Not for Resale

12.3.2.29.1 Description ---------- 224
12.3.2.29.2 Protocol ---------- 225
12.3.2.29.3 Request Sequence ---------- 225
12.3.2.29.4 Reply Sequence ---------- 227
12.3.2.30 Request Node Identification Data (RNID) ---------- 227
12.3.2.30.1 Introduction ---------- 227
12.3.2.30.2 Protocol ---------- 228
12.3.2.30.3 Request Sequence ---------- 228
12.3.2.30.4 Reply Sequence: ---------- 229
12.3.2.31 Registered Link Incident Report (RLIR) ---------- 234
12.3.2.31.1 Description ---------- 234
12.3.2.31.2 Link Incident reporting procedure ---------- 234
12.3.2.31.3 Protocol ---------- 235
12.3.2.31.4 Request Sequence ---------- 235
12.3.2.31.5 Reply Sequence ---------- 241
12.3.2.32 Link Incident Record Registration (LIRR) ---------- 241
12.3.2.32.1 Description ---------- 241
12.3.2.32.2 Registration for Link Incident Records ---------- 241
12.3.2.32.3 Responsibilities of Valid-Registered Recipients ---------- 242
12.3.2.32.4 Protocol ---------- 242
12.3.2.32.5 Request Sequence ---------- 242
12.3.2.32.6 Reply Sequence ---------- 243
12.3.2.33 Get Alias_ID (GAID) ---------- 244
12.3.2.33.1 Description ---------- 244
12.3.2.33.2 Protocol ---------- 244
12.3.2.33.3 Request Sequence ---------- 244
12.3.2.33.4 Reply Sequence ---------- 245
12.3.2.34 Fabric Activate Alias_ID (FACT) ---------- 245
12.3.2.34.1 Description ---------- 245
12.3.2.34.2 Protocol ---------- 245
12.3.2.34.3 Request Sequence ---------- 245
12.3.2.34.4 Reply Sequence ---------- 246
12.3.2.35 Fabric Deactivate Alias_ID (FDACT) ---------- 246
12.3.2.35.1 Description ---------- 246
12.3.2.35.2 Protocol ---------- 246
12.3.2.35.3 Request Sequence ---------- 246
12.3.2.35.4 Reply Sequence ---------- 247
12.3.2.36 N_Port Activate Alias_ID (NACT) ---------- 247
12.3.2.36.1 Description ---------- 247
12.3.2.36.2 Protocol ---------- 247
12.3.2.36.3 Reply Sequence ---------- 248
12.3.2.36.4 Reply Sequence ---------- 248
12.3.2.37 N_Port Deactivate Alias_ID (NDACT) ---------- 249
12.3.2.37.1 Description ---------- 249
12.3.2.37.2 Protocol ---------- 249
12.3.2.37.3 Request Sequence ---------- 249
12.3.2.37.4 Reply Sequence ---------- 249
12.3.2.38 Quality of Service Request (QoSR) ---------- 250
12.3.2.38.1 Description ---------- 250
12.3.2.38.2 Protocol ---------- 250
12.3.2.38.3 Request Sequence ---------- 250
12.3.2.38.4 Reply Sequence ---------- 252
12.3.2.39 Read Virtual Circuit Status (RVCS) ---------- 254
12.3.2.39.1 Description ---------- 254
12.3.2.39.2 Protocol ---------- 254
12.3.2.39.3 Request Sequence ---------- 254
12.3.2.39.4 Reply Sequence ---------- 255

--`,,```,,,,````-`-`,,`,,`,`,,`---

Copyright International Organization for Standardization
Provided by IHS under license with ISO
No reproduction or networking permitted without license from IHS Not for Resale

12.3.2.40 Discover N_Port/Service Parameters (PDISC) - - - - - - - - - - - - - - - - - - - - - - - - 255
12.3.2.40.1 Description - - - - - - - - - - - - - - - - - - - - - - - - - - - - - - - - - - - - - - - - - - - - - 255
12.3.2.40.2 Protocol - - - - - - - - - - - - - - - - - - - - - - - - - - - - - - - - - - - - - - - - - - - - - - 255
12.3.2.40.3 Request Sequence - - - - - - - - - - - - - - - - - - - - - - - - - - - - - - - - - - - - - - - 255
12.3.2.40.4 Reply Sequence - - - - - - - - - - - - - - - - - - - - - - - - - - - - - - - - - - - - - - - - - 256
12.3.2.41 Discover F_Port Service Parameters (FDISC) - - - - - - - - - - - - - - - - - - - - - - - - 256
12.3.2.41.1 Description - - - - - - - - - - - - - - - - - - - - - - - - - - - - - - - - - - - - - - - - - - - - 256
12.3.2.41.2 Protocol - - - - - - - - - - - - - - - - - - - - - - - - - - - - - - - - - - - - - - - - - - - - - - 256
12.3.2.41.3 Request Sequence - - - - - - - - - - - - - - - - - - - - - - - - - - - - - - - - - - - - - - - 256
12.3.2.41.4 Reply Sequence - - - - - - - - - - - - - - - - - - - - - - - - - - - - - - - - - - - - - - - - - 256
12.3.2.42 Discover Address (ADISC) - - - - - - - - - - - - - - - - - - - - - - - - - - - - - - - - - - - 256
12.3.2.42.1 Description - - - - - - - - - - - - - - - - - - - - - - - - - - - - - - - - - - - - - - - - - - - - 256
12.3.2.42.2 Protocol - - - - - - - - - - - - - - - - - - - - - - - - - - - - - - - - - - - - - - - - - - - - - - 256
12.3.2.42.3 Request Sequence - - - - - - - - - - - - - - - - - - - - - - - - - - - - - - - - - - - - - - - 257
12.3.2.42.4 Reply Sequence - - - - - - - - - - - - - - - - - - - - - - - - - - - - - - - - - - - - - - - - - 257
12.3.2.43 Third Party Process Logout (TPRLO) - - - - - - - - - - - - - - - - - - - - - - - - - - - - - 258
12.3.2.43.1 Description - - - - - - - - - - - - - - - - - - - - - - - - - - - - - - - - - - - - - - - - - - - - 258
12.3.2.43.2 Protocol - - - - - - - - - - - - - - - - - - - - - - - - - - - - - - - - - - - - - - - - - - - - - - 258
12.3.2.43.3 Request Sequence - - - - - - - - - - - - - - - - - - - - - - - - - - - - - - - - - - - - - - - 258
12.3.2.44 Clock Synchronization Request (CSR) - - - - - - - - - - - - - - - - - - - - - - - - - - - - 260
12.3.2.44.1 Description - - - - - - - - - - - - - - - - - - - - - - - - - - - - - - - - - - - - - - - - - - - - 260
12.3.2.44.2 Protocol - - - - - - - - - - - - - - - - - - - - - - - - - - - - - - - - - - - - - - - - - - - - - - 260
12.3.2.44.3 Request Sequence - - - - - - - - - - - - - - - - - - - - - - - - - - - - - - - - - - - - - - - 260
12.3.2.44.4 Reply Sequence - - - - - - - - - - - - - - - - - - - - - - - - - - - - - - - - - - - - - - - - - 260
12.3.2.45 Clock Synchronization Update (CSU) - - - - - - - - - - - - - - - - - - - - - - - - - - - - - 260
12.3.2.45.1 Description - - - - - - - - - - - - - - - - - - - - - - - - - - - - - - - - - - - - - - - - - - - - 260
12.3.2.45.2 Protocol - - - - - - - - - - - - - - - - - - - - - - - - - - - - - - - - - - - - - - - - - - - - - - 261
12.3.2.45.3 Request Sequence - - - - - - - - - - - - - - - - - - - - - - - - - - - - - - - - - - - - - - - 261
12.3.2.45.4 Reply Sequence - - - - - - - - - - - - - - - - - - - - - - - - - - - - - - - - - - - - - - - - - 261
12.3.2.46 Login Control List Management (LCLM) - - - - - - - - - - - - - - - - - - - - - - - - - - - 261
12.3.2.46.1 Description - - - - - - - - - - - - - - - - - - - - - - - - - - - - - - - - - - - - - - - - - - - - 261
12.3.2.46.2 Protocol - - - - - - - - - - - - - - - - - - - - - - - - - - - - - - - - - - - - - - - - - - - - - - 263
12.3.2.46.3 Request Sequence - - - - - - - - - - - - - - - - - - - - - - - - - - - - - - - - - - - - - - - 263
12.3.2.46.4 Reply sequence - - - - - - - - - - - - - - - - - - - - - - - - - - - - - - - - - - - - - - - - - 264
12.3.2.47 Read Port Status Block (RPS) - - - - - - - - - - - - - - - - - - - - - - - - - - - - - - - - - 266
12.3.2.47.1 Description - - - - - - - - - - - - - - - - - - - - - - - - - - - - - - - - - - - - - - - - - - - - 266
12.3.2.47.2 Protocol - - - - - - - - - - - - - - - - - - - - - - - - - - - - - - - - - - - - - - - - - - - - - - 266
12.3.2.47.3 Request Sequence - - - - - - - - - - - - - - - - - - - - - - - - - - - - - - - - - - - - - - - 266
12.3.2.47.4 Reply Sequence - - - - - - - - - - - - - - - - - - - - - - - - - - - - - - - - - - - - - - - - - 267
12.3.2.48 Read Port List (RPL) - - - - - - - - - - - - - - - - - - - - - - - - - - - - - - - - - - - - - - 270
12.3.2.48.1 Description - - - - - - - - - - - - - - - - - - - - - - - - - - - - - - - - - - - - - - - - - - - - 270
12.3.2.48.2 Protocol - - - - - - - - - - - - - - - - - - - - - - - - - - - - - - - - - - - - - - - - - - - - - - 270
12.3.2.48.3 Request Sequence - - - - - - - - - - - - - - - - - - - - - - - - - - - - - - - - - - - - - - - 270
12.3.2.48.4 Reply Sequence - - - - - - - - - - - - - - - - - - - - - - - - - - - - - - - - - - - - - - - - - 271
12.3.2.49 Report Port Buffer Conditions (RPBC) - - - - - - - - - - - - - - - - - - - - - - - - - - - - 271
12.3.2.49.1 Description - - - - - - - - - - - - - - - - - - - - - - - - - - - - - - - - - - - - - - - - - - - - 271
12.3.2.49.2 Protocol - - - - - - - - - - - - - - - - - - - - - - - - - - - - - - - - - - - - - - - - - - - - - - 272
12.3.2.49.3 Request Sequence - - - - - - - - - - - - - - - - - - - - - - - - - - - - - - - - - - - - - - - 272
12.3.2.49.4 Reply Sequence - - - - - - - - - - - - - - - - - - - - - - - - - - - - - - - - - - - - - - - - - 272
12.3.2.50 Report node FC-4 Types (RNFT) - - - - - - - - - - - - - - - - - - - - - - - - - - - - - - - - 273
12.3.2.50.1 Description - - - - - - - - - - - - - - - - - - - - - - - - - - - - - - - - - - - - - - - - - - - - 273
12.3.2.50.2 Protocol - - - - - - - - - - - - - - - - - - - - - - - - - - - - - - - - - - - - - - - - - - - - - - 273
12.3.2.50.3 Request Sequence - - - - - - - - - - - - - - - - - - - - - - - - - - - - - - - - - - - - - - - 273
12.3.2.50.4 Reply Sequence - - - - - - - - - - - - - - - - - - - - - - - - - - - - - - - - - - - - - - - - - 274
12.3.2.51 Scan Remote Loop (SRL) - - - - - - - - - - - - - - - - - - - - - - - - - - - - - - - - - - - - 275
12.3.2.51.1 Description - - - - - - - - - - - - - - - - - - - - - - - - - - - - - - - - - - - - - - - - - - - - 275
12.3.2.51.2 Protocol - - - - - - - - - - - - - - - - - - - - - - - - - - - - - - - - - - - - - - - - - - - - - - 275

--`,,```,,,,````-`-`,,`,,`,`,,`---

Copyright International Organization for Standardization
Provided by IHS under license with ISO
No reproduction or networking permitted without license from IHS Not for Resale

12.3.2.51.3 Request Sequence - - -

13.6.3 Login - - - - - 297
13.6.4 Circuit Setup - - - - - 297
13.6.5 Circuit Activation - - - - - 297
13.6.6 Circuit Deactivation - - - - - 297
13.6.7 Circuit Removal - - - - - 298
13.6.8 Rules - - - - - 298
13.6.9 Interleaving other classes of service in Class 4 - - - - - 299
13.6.10 Class 4 delimiters - - - - - 299
13.6.11 Frame size - - - - - 300
13.6.12 End-to-end flow control - - - - - 300
13.6.13 Buffer-to-buffer flow control - - - - - 300
13.7 Class 6 - Connected Multicast - - - - - 301
13.7.1 Function - - - - - 301
13.7.2 Rules - - - - - 301
13.7.3 Delimiters - - - - - 303
13.7.4 Frame size - - - - - 303
13.7.5 Flow control - - - - - 303
13.7.6 Stacked Connect-requests - - - - - 303

**14 Name_Identifier Formats - - - - - 304**
14.1 Introduction - - - - - 304
14.2 IEEE 48-bit address - - - - - 304
14.3 IEEE extended - - - - - 305
14.4 Locally assigned - - - - - 305
14.5 32-bit IP address - - - - - 306
14.6 IEEE registered - - - - - 306
14.7 IEEE registered extended - - - - - 307
14.8 Other uses of IEEE registered Company_ID - - - - - 307
14.9 EUI-64 Mapped - - - - - 307
14.9.1 General - - - - - 307
14.9.2 EUI-64 to WWN Mapping Rules - - - - - 308
14.9.3 Encapsulated MAC-48 and EUI-48 translation - - - - - 308

**15 Login and Service Parameters - - - - - 309**
15.1 Introduction - - - - - 309
15.2 Default Login values - - - - - 309
15.3 Fabric Login - - - - - 310
15.3.1 Introduction - - - - - 310
15.3.2 Explicit Fabric Login - - - - - 310
15.3.2.1 Introduction - - - - - 310
15.3.2.2 Explicit Fabric Login Request - - - - - 310
15.3.2.3 Responses to Explicit Fabric Login - - - - - 310
15.3.2.4 Relogin with the Fabric - - - - - 311
15.3.3 SOF delimiters - - - - - 312
15.3.4 Frequency - - - - - 312
15.3.5 Fabric Login completion - Originator - - - - - 312
15.3.6 Fabric Login completion - Responder - - - - - 312
15.4 N_Port Login - - - - - 313
15.4.1 Introduction - - - - - 313
15.4.2 Explicit N_Port Login - - - - - 314
15.4.2.1 Introduction - - - - - 314
15.4.2.2 N_Port Login - Fabric present - - - - - 314
15.4.2.3 Responses to N_Port Login - Fabric present - - - - - 314
15.4.2.4 N_Port Login - No Fabric present - - - - - 315
15.4.2.5 Responses to N_Port Login - No Fabric present - - - - - 315
15.4.3 SOF delimiters - - - - - 316
15.4.4 Frequency - - - - - 316
15.4.5 N_Port Login completion - Originator - - - - - 316

Copyright International Organization for Standardization
Provided by IHS under license with ISO
No reproduction or networking permitted without license from IHS
Not for Resale

15.4.6 N_Port Login completion - Responder ---- 316
15.4.7 N_Port Login frame flow ---- 316
15.5 Logout ---- 317
15.5.1 Introduction ---- 317
15.5.2 Explicit N_Port Logout ---- 317
15.5.3 Implicit Logout ---- 317
15.6 Service Parameters ---- 317
15.6.1 ELS and LS_ACC Payload ---- 317
15.6.2 Common Service Parameters ---- 319
15.6.2.1 Applicability ---- 319
15.6.2.2 Payload ---- 320
15.6.2.3 Buffer-to-buffer Credit ---- 321
15.6.2.4 Common Features ---- 321
15.6.2.4.1 Continuously increasing relative offset ---- 321
15.6.2.4.2 Clean Address ---- 322
15.6.2.4.3 Random relative offset ---- 322
15.6.2.4.4 Valid Vendor Version Level ---- 322
15.6.2.4.5 Multiple N_Port_ID Assignment ---- 322
15.6.2.4.6 N_Port/F_Port ---- 322
15.6.2.4.7 BB_Credit Management ---- 322
15.6.2.4.8 E_D_TOV Resolution ---- 323
15.6.2.4.9 Multicast ---- 323
15.6.2.4.10 Broadcast ---- 323
15.6.2.4.11 Hunt Group ---- 323
15.6.2.4.12 Query Buffer Conditions ---- 323
15.6.2.4.13 Clock Synchronization Primitive Capable ---- 323
15.6.2.4.14 R_T_TOV value ---- 324
15.6.2.4.15 Dynamic Half Duplex Supported ---- 324
15.6.2.4.16 SEQ_CNT ---- 324
15.6.2.4.17 Payload Bit ---- 324
15.6.2.5 BB_SC_N ---- 325
15.6.2.6 Buffer-to-buffer Receive Data_Field size ---- 325
15.6.2.7 Total Concurrent Sequences ---- 325
15.6.2.8 Relative offset by category ---- 325
15.6.2.9 R_A_TOV ---- 325
15.6.2.10 E_D_TOV ---- 325
15.6.3 N_Port_Name ---- 326
15.6.4 Node_ or Fabric_Name ---- 326
15.6.5 Class Service Parameters ---- 326
15.6.5.1 Applicability ---- 326
15.6.5.2 Payload ---- 328
15.6.5.3 Class validity ---- 329
15.6.5.4 Service options ---- 329
15.6.5.4.1 Introduction ---- 329
15.6.5.4.2 Intermix Mode ---- 329
15.6.5.4.3 Stacked Connect-requests ---- 330
15.6.5.4.4 Sequential delivery ---- 330
15.6.5.4.5 Priority/Preemption ---- 331
15.6.5.4.6 Preference ---- 331
15.6.5.4.6.1 Nx_Port ---- 331
15.6.5.4.6.2 Fx_Port ---- 332
15.6.5.4.7 DiffServ QoS ---- 333
15.6.5.4.7.1 N_Port Login ---- 333
15.6.5.4.7.2 F_Port Login ---- 333
15.6.5.5 Initiator control ---- 334
15.6.5.5.1 Introduction ---- 334
15.6.5.5.2 Initial Process_Associator ---- 334

Copyright International Organization for Standardization
Provided by IHS under license with ISO
No reproduction or networking permitted without license from IHS
Not for Resale

15.6.5.5.3 ACK_0 capability - - -

16.1.4.1 PA required by originator and responder - - - - - - - - - - - - - - - - - - - - - - - - - - - - 350
16.1.4.2 PA required by originator, supported by responder - - - - - - - - - - - - - - - - - - - - - - 351
16.1.4.3 PA supported by originator, required by responder - - - - - - - - - - - - - - - - - - - - - - 351
16.2 Process Logout - - - - - - - - - - - - - - - - - - -

17.7.2 Abnormal termination - - -

18.11 Point-to-point topology ---- 394

**19 Segmentation and reassembly ---- 398**
19.1 Introduction ---- 398
19.2 Sending end ---- 398
19.2.1 Introduction ---- 398
19.2.2 Relative offset space ---- 398
19.2.3 Data block ---- 398
19.2.4 Sequence ---- 398
19.2.5 Relationship between Sequences ---- 398
19.3 FC-2 ---- 399
19.3.1 Mechanisms ---- 399
19.3.2 Relative offset ---- 399
19.3.3 SEQ_CNT ---- 399
19.4 Login ---- 399
19.5 Segmentation rules ---- 400
19.6 Reassembly rules ---- 400

**20 Connection management ---- 402**
20.1 Introduction ---- 402
20.1.1 Establishing a Connection ---- 402
20.1.2 Removing a Connection ---- 402
20.1.3 Preempting a dedicated connection ---- 402
20.1.4 Frame processing precedence ---- 403
20.2 Applicability ---- 403
20.3 Topology models ---- 404
20.3.1 Introduction ---- 404
20.3.2 Fabric model ---- 404
20.3.3 Point-to-point model ---- 404
20.4 Connect/disconnect rules ---- 405
20.4.1 Connect-request rules ---- 405
20.4.1.1 Source of connect-request ---- 405
20.4.1.2 Destination of connect-request ---- 406
20.4.2 Connection Rules ---- 406
20.4.3 Remove Connection rules ---- 407
20.5 Establishing a Connection ---- 407
20.5.1 Introduction ---- 407
20.5.2 Connection Initiator ---- 407
20.5.3 Stacked connect-requests ---- 409
20.5.4 Unidirectional dedicated connection ---- 410
20.5.5 Destination of connect-request ---- 410
20.6 Connected ---- 411
20.7 Removing a Connection ---- 411
20.7.1 Introduction ---- 411
20.7.2 When to remove a Connection ---- 411
20.7.3 End_Connection bit ---- 411
20.7.4 EOF***dt*** transmission ---- 412
20.8 Connection Recovery ---- 412
20.8.1 Introduction ---- 412
20.8.2 Link timeout ---- 412
20.8.3 Corrupted connect-request ---- 412
20.9 Connection Preemption ---- 413
20.9.1 Applicability ---- 413
20.9.2 Topology Model ---- 413
20.9.3 Rules for Preemption ---- 413
20.9.3.1 Preemptor ---- 413
20.9.3.2 Preempted Source ---- 413
20.9.3.3 Preempted Destination(s) ---- 414

--`,,```,,,,````-`-`,,`,,`,`,,`---

Copyright International Organization for Standardization
Provided by IHS under license with ISO
No reproduction or networking permitted without license from IHS Not for Resale

20.9.3.4 Preemption Destination(s) - - -

21.6.5 Sequence error detection ---- 426
21.6.6 X_ID processing ---- 427
21.7 Sequence recovery ---- 427
21.7.1 Introduction ---- 427
21.7.2 Abnormal Sequence termination ---- 427
21.7.2.1 Introduction ---- 427
21.7.2.2 Abort Sequence Protocol ---- 427
21.7.2.2.1 General Case ---- 427
21.7.2.2.2 Special case - new Exchange ---- 428
21.7.2.3 Class 1 or 6 Sequence retransmission ---- 428
21.7.2.4 Recipient abnormal termination ---- 430
21.7.2.5 End_Sequence ---- 430
21.7.3 Stop Sequence Protocol ---- 430
21.7.4 End-to-end Credit loss ---- 430
21.8 Link Error Status Block ---- 431
21.9 Detailed Error Detection/Actions ---- 431
21.9.1 Errors detected ---- 431
21.9.2 Actions by Initiator or Recipient ---- 432

**22 Hunt Group ---- 435**
22.1 Introduction ---- 435
22.2 Function ---- 435
22.3 Communication Model ---- 435
22.4 Applicability ---- 435
22.4.1 Classes ---- 435
22.4.2 Class 4 Addressing ---- 435
22.5 Formation ---- 436
22.5.1 General ---- 436
22.5.2 Registration/deregistration ---- 436
22.5.3 Inquiry ---- 437
22.5.4 HG_ID Removal ---- 437
22.6 N_Port Login ---- 437
22.7 Addressing Protocol ---- 437
22.7.1 address identifier Protocol ---- 437
22.7.2 Originator ---- 437
22.7.3 Responder ---- 437
22.7.4 Address Resolution ---- 438
22.7.5 Class ---- 438
22.7.6 Class 4 ---- 438
22.8 Resource management ---- 438
22.8.1 Introduction ---- 438
22.8.2 HG_ID use ---- 439
22.8.3 N_Port_ID use ---- 439
22.9 Rotary Group ---- 439

**23 Multicast ---- 441**
23.1 Applicability ---- 441
23.2 Class 3 Multicast ---- 441
23.2.1 Introduction ---- 441
23.2.2 Registration and De-registration ---- 441
23.2.3 Multicast Routing ---- 441
23.2.4 Class 3 Multicast Rules ---- 442
23.3 Class 6 Multicast ---- 442
23.3.1 Introduction ---- 442
23.3.2 Class 6 Multicast Routing ---- 443
23.3.3 Class 6 Multicast Rules ---- 443
23.3.4 Class 6 Multicast Server ---- 444
23.3.5 Class 6 Multicast Recovery ---- 444

--`,,```,,,,````-`-`,,`,,`,`,,`---
Copyright International Organization for Standardization
Provided by IHS under license with ISO
No reproduction or networking permitted without license from IHS
Not for Resale

23.4 Broadcast - - -

27.1 Introduction - - -

A.5 Transmit order of a word ---- 496
A.6 CRC generation example for ACK_1 frame ---- 496

**Annex B (informative) Data transfer protocols and examples ---- 500**
B.1 General ---- 500
B.2 Frame level protocol ---- 500
B.2.1 Class 1 and 6 frame level protocol ---- 500
B.2.2 Class 2 frame level protocol ---- 501
B.2.3 Class 3 Frame Level Protocol ---- 503
B.3 Sequence level protocol example ---- 505
B.4 Class 1 and 6 frame level protocol example ---- 507
B.5 Class 2 frame level protocol example ---- 508
B.6 Class 3 frame level protocol example ---- 509

**Annex C (informative) Connection management applications ---- 511**
C.1 Example cases ---- 511
C.1.1 Introduction ---- 511
C.1.2 Case 1 ---- 511
C.1.3 Case 2 ---- 511
C.1.4 Case 3 ---- 512
C.1.5 Case 4 ---- 512
C.2 Ending sequence and Connection ---- 512

**Annex D (informative) Out of order characteristics ---- 514**
D.1 Introduction ---- 514
D.2 Out of order Data frame delivery ---- 514
D.3 Out of order ACK transmission ---- 515

**Annex E (informative) Link Error Status Block ---- 516**
E.1 Introduction ---- 516
E.2 Link failure counters ---- 516
E.3 Invalid Transmission Word ---- 516
E.4 Invalid CRC Count ---- 516

**Annex F (informative) Class 4 Examples ---- 518**
F.1 Introduction ---- 518
F.2 Setup, activate and deactivate ---- 518
F.3 Activation collision and removal ---- 519

**Annex G (informative) Priority and Preemption ---- 524**
G.1 Overview ---- 524
G.2 Preemption Process ---- 524
G.3 Link Reset Protocol ---- 526

**Annex H (informative) Clock Synchronization ---- 527**
H.1 Introduction ---- 527
H.2 Discussion ---- 527
H.2.1 Introduction ---- 527
H.2.2 A Model of an NL_Port ---- 527
H.2.3 Hardware-Assisted Clock Synchronization ---- 528
H.2.4 A Point-to-Point System ---- 528
H.2.4.1 Introduction ---- 528
H.2.4.2 Discussion of Errors ---- 531
H.2.4.2.1 Introduction ---- 531
H.2.4.2.2 Client Oscillator Frequency Error ---- 531
H.2.4.2.3 Link Propagation Delay Error ---- 532
H.2.4.2.4 Unload Error ---- 533
H.2.4.2.5 Load Error ---- 534
H.2.4.2.6 R/T Clock Domain Error ---- 535
H.2.4.2.7 Server Oscillator Error ---- 536

Copyright International Organization for Standardization
Provided by IHS under license with ISO
No reproduction or networking permitted without license from IHS
Not for Resale

H.2.4.3 Techniques for Reducing Deterministic Errors - - - - - - - - - - - - - - - - - - - - - - - - - - - 536
H.2.4.3.1 A Fix for Differences in Oscillator Frequencies - - - - - - - - - - - - - - - - - - - - - - 536
H.2.4.3.2 A Fix for Link Propagation Delay Error - - - - - - - - - - - - - - - - - - - - - - - - - - 537
H.2.4.3.3 A Fix for Load Error - - - - - - - - - - - - - - - - - - - - - - - - - - - - - - - - - - - - - 537
H.2.4.3.4 A Fix for Unload Error - - - - - - - - - - - - - - - - - - - - - - - - - - - - - - - - - - - 540
H.2.4.4 Dealing With Non-Deterministic Error - - - - - - - - - - - - - - - - - - - - - - - - - - - - 540
H.2.4.5 Dealing With Non-Monotonicity - - - - - - - - - - - - - - - - - - - - - - - - - - - - - - - 540
H.2.5 Fabric Considerations - - - - - - - - - - - - - - - - - - - - - - - - - - - - - - - - - - - - - - - - 541
H.2.5.1 Introduction - - - - - - - - - - - - - - - - - - - - - - - - - - - - - - - - - - - - - - - - - - - 541
H.2.5.2 Discussion of Errors - - - - - - - - - - - - - - - - - - - - - - - - - - - - - - - - - - - - - 542
H.2.5.2.1 Client Oscillator Frequency Error - - - - - - - - - - - - - - - - - - - - - - - - - - - 542
H.2.5.2.2 Link Propagation Delay Error - - - - - - - - - - - - - - - - - - - - - - - - - - - - - 544
H.2.5.2.3 Unload Error - - - - - - - - - - - - - - - - - - - - - - - - - - - - - - - - - - - - - - - 544
H.2.5.2.4 Load Error - - - - - - - - - - - - - - - - - - - - - - - - - - - - - - - - - - - - - - - - 544
H.2.5.2.5 R/T Clock Domain Error - - - - - - - - - - - - - - - - - - - - - - - - - - - - - - - - 544
H.2.5.2.6 Server Oscillator Error - - - - - - - - - - - - - - - - - - - - - - - - - - - - - - - - 545
H.2.5.3 Fixes for Fabric Errors - - - - - - - - - - - - - - - - - - - - - - - - - - - - - - - - - - - 545
H.2.6 Loop Considerations - - - - - - - - - - - - - - - - - - - - - - - - - - - - - - - - - - - - - - - - 545
H.2.6.1 Introduction - - - - - - - - - - - - - - - - - - - - - - - - - - - - - - - - - - - - - - - - - - - 545
H.2.6.2 Discussion of Errors - - - - - - - - - - - - - - - - - - - - - - - - - - - - - - - - - - - - - 545
H.2.6.3 Introduction - - - - - - - - - - - - - - - - - - - - - - - - - - - - - - - - - - - - - - - - - - - 545
H.2.6.3.1 Node Delay - - - - - - - - - - - - - - - - - - - - - - - - - - - - - - - - - - - - - - - - - 546
H.2.6.3.2 Client Oscillator Frequency Error - - - - - - - - - - - - - - - - - - - - - - - - - - - 547
H.2.6.3.3 Link Propagation Delay Error - - - - - - - - - - - - - - - - - - - - - - - - - - - - - 547
H.2.6.3.4 Unload Error - - - - - - - - - - - - - - - - - - - - - - - - - - - - - - - - - - - - - - - 547
H.2.6.3.5 Load Error - - - - - - - - - - - - - - - - - - - - - - - - - - - - - - - - - - - - - - - - 547
H.2.6.3.6 R/T Clock Domain Error - - - - - - - - - - - - - - - - - - - - - - - - - - - - - - - - 547
H.2.6.3.7 Server Oscillator Error - - - - - - - - - - - - - - - - - - - - - - - - - - - - - - - - 547
H.2.6.4 Fixes for Loop Errors - - - - - - - - - - - - - - - - - - - - - - - - - - - - - - - - - - - 547
H.3 An Example - - - - - - - - - - - - - - - - - - - - - - - - - - - - - - - - - - - - - - - - - - - - - - - 547

**Annex I (informative) Speed Negotiation details - - - - - - - - - - - - - - - - - - - - - - - - - - - - - - - - 550**
I.1 Scope - - - - - - - - - - - - - - - - - - - - - - - - - - - - - - - - - - - - - - - - - - - - - - - - - - - 550
I.2 Basic assumptions - - - - - - - - - - - - - - - - - - - - - - - - - - - - - - - - - - - - - - - - - - - 550
I.3 Supported configuration - - - - - - - - - - - - - - - - - - - - - - - - - - - - - - - - - - - - - - - 551
I.4 Derivation of timing requirements and characteristics - - - - - - - - - - - - - - - - - - - - - - - - 551
I.4.1 Introduction and diagram conventions - - - - - - - - - - - - - - - - - - - - - - - - - - - - - 551
I.4.2 Receiver cycle time, t_rxcycl - - - - - - - - - - - - - - - - - - - - - - - - - - - - - - - - - 552
I.4.3 Master transmitter cycle time, t_txcycl - - - - - - - - - - - - - - - - - - - - - - - - - - - 552
I.4.4 Speed stability time, t_stbl - - - - - - - - - - - - - - - - - - - - - - - - - - - - - - - - - - 552
I.4.5 Watchdog timer threshold, t_fail - - - - - - - - - - - - - - - - - - - - - - - - - - - - - - - 552
I.4.6 Watchdog Timer test delay, t_wddly - - - - - - - - - - - - - - - - - - - - - - - - - - - - - 553
I.4.7 Speed recording time, t_ncycl - - - - - - - - - - - - - - - - - - - - - - - - - - - - - - - - - 553
I.4.8 Speed recording time initial value, t_ncinit - - - - - - - - - - - - - - - - - - - - - - - - - 554
I.4.9 Parameters relating to the optional slow_wait stage: - - - - - - - - - - - - - - - - - - - - - 555
I.4.9.1 Low processing load sleep time, t_sleep - - - - - - - - - - - - - - - - - - - - - - - - - 555
I.4.9.2 Slow_wait cycle transmit cycle delay, t_txdly - - - - - - - - - - - - - - - - - - - - - - 555
I.4.9.3 Periodic sync search wake time, t_wake - - - - - - - - - - - - - - - - - - - - - - - - - 555
I.4.10 Duration of disruption to single loops caused by connecting speed negotiating ports to hubs - - - - - - - - - - - - - - - - - - -

I.4.10.8 Maximum disruption group - Negotiate_master - - - - - - - - - - - - - - - - - - - - - - - - - 561
I.4.10.9 Maximum disruption group - Negotiate_follow - - - - - - - - - - - - - - - - - - - - - - - - - 562
I.4.10.10 Maximum single disruption overall - - - - - - - - - - - - - - - - - - - - - - - - - - - - - - - - 562
I.4.10.11 Maximum disruption group overall - - - - - - - - - - - - - - - - - - - - - - - - - - - - - - - - 563
I.4.10.12 Summary of loop disruption - - - - - - - - - - - - - - - - - - - - - - - - - - - - - - - - - - - - 563
I.4.11 Algorithm convergence time: - - - - - - - - - - - - - - - - - - - - - - - - - - - - - - - - - - - - - - 564
I.5 Ports using separate PMD components - - - - - - - - - - - - - - - - - - - - - - - - - - - - - - - - - - 564
I.6 Implementation notes - - - - - - - - - - - - - - - - - - - - - - - - - - - - - - - - - - - - - - - - - - - - 566

**Annex J (informative) IEEE company_ID- - - - - - - - - - - - - - - - - - - -

Figure 1 - Fibre Channel Structure ..... 57
Figure 2 - Node functional configuration ..... 59
Figure 3 - FC-FS physical model ..... 61
Figure 4 - Point-to-point topology ..... 62
Figure 5 - Fabric topology ..... 63
Figure 6 - Examples of the Arbitrated Loop Topology ..... 64
Figure 7 - Informative general Fabric model ..... 67
Figure 8 - FC-2 building block hierarchy ..... 69
Figure 9 - Receiver State Diagram ..... 89
Figure 10 - Transmitter State Diagram ..... 93
Figure 11 - FC-2 frame format ..... 103
Figure 12 - CIVC_ID and CRVC_ID management ..... 118
Figure 13 - Frame structure when ESP_Header is not used ..... 135
Figure 14 - Frame structure with ESP_Header and ESP_Trailer ..... 136
Figure 15 - QoSR Sequence flow ..... 250
Figure 16 - Illustration of parameters ..... 277
Figure 17 - LS_RJT format ..... 283
Figure 18 - Class 4 circuit – Management ..... 296
Figure 19 - Image/Group of Related Processes ..... 347
Figure 20 - Image pairs ..... 348
Figure 21 - Exchange - Sequence relationship ..... 354
Figure 22 - Exchange origination ..... 366
Figure 23 - Physical flow control model for Classes 1, 2, 3 and 6 ..... 375
Figure 24 - End-to-end flow control model ..... 381
Figure 25 - Procedure to estimate end-to-end Credit ..... 383
Figure 26 - Buffer-to-buffer flow control model ..... 387
Figure 27 - Class 1 or 6/SOFc1 frame flow with delivery or non-delivery to the fabric ..... 388
Figure 28 - Class 1 or 6/SOFc1 frame flow with delivery or non-delivery to an Nx_Port ..... 388
Figure 29 - Buffer-to-buffer - Class 2 frame flow with delivery or non-delivery to a Fabric ..... 389
Figure 30 - Buffer-to-buffer - Class 2 frame flow with delivery or non-delivery to an Nx_Port ..... 390
Figure 31 - Buffer-to-buffer - Class 3 frame flow ..... 391
Figure 32 - LCR frame flow and possible responses ..... 394
Figure 33 - LCR flow control model ..... 395
Figure 34 - Integrated Class 2 flow control ..... 397
Figure 35 - Frame Flow Timers ..... 421
Figure 36 - Link recovery hierarchy ..... 424
Figure 37 - Relationship of a Non-Participating to a Participating Nx_Port and switch ..... 440
Figure 38 - Class 3 Multicast Routing ..... 442
Figure 39 - Class 6 Multicast Routing ..... 443
Figure 40 - Function Flow ..... 447
Figure 41 - Class 4 Circuit hierarchy ..... 449
Figure 42 - Basic Class 4 circuit ..... 451
Figure 43 - Class 4 circuits – Example ..... 451
Figure 44 - Class 4 circuit - Port level state diagram ..... 453
Figure 45 - Class 4 circuit – Setup ..... 455
Figure 46 - Class 4 circuit – Activation ..... 457
Figure 47 - Class 4 - Example of frame flow ..... 457
Figure 48 - Class 4 circuit - CTI or CTR initiated ..... 458
Figure 49 - Class 4 circuit - Fabric initiated deactivation ..... 458
Figure 50 - Class 4 circuit - CTI or CTR initiated removal ..... 459
Figure 51 - Class 4 circuit - Fabric initiated removal ..... 459
Figure 52 - Class 4 circuit - Data frame responses ..... 463
Figure 53 - ELS Clock Sync Model – Fabric ..... 469
Figure 54 - ELS Clock Sync Model – Loop ..... 471

Copyright International Organization for Standardization
Provided by IHS under license with ISO
No reproduction or networking permitted without license from IHS Not for Resale

Figure 55 - Clock Synchronization Data Distribution ..... 476
Figure 56 - Synchronization Primitive Substitution for IDLE Primitives in Inter-frame Interval ..... 476
Figure 57 - Clock Synchronization Primitive Ordered Sets ..... 477
Figure 58 - Physical architecture of the Speed Negotiating Link ..... 481
Figure 59 - Delay / Test operations ..... 483
Figure 60 - Overview of the Speed Negotiation algorithm ..... 484
Figure 61 - Wait_for_signal flowchart ..... 485
Figure 62 - Negotiate_master and Watchdog timer flowchart ..... 487
Figure 63 - Negotiate_follow flowchart ..... 489
Figure 64 - Normal operation flowchart ..... 490
Figure 65 - Slow_wait flowchart ..... 491
Figure A.1 - CRC coverage and bit ordering ..... 496
Figure A.2 - Word transmit order ..... 496
Figure B.1 - Class 1 and 6 frame level protocol ..... 501
Figure B.2 - Class 2 frame level protocol ..... 503
Figure B.3 - Class 3 frame level protocol ..... 504
Figure B.4 - Sequence level protocol example ..... 506
Figure B.5 - Class 1 and 6 frame level protocol - Login example ..... 508
Figure B.6 - Class 2 frame level protocol - Login example ..... 509
Figure B.7 - Class 3 frame level protocol - Login example ..... 510
Figure F.1 - Class 4 setup, activation and deactivation ..... 521
Figure F.2 - Class 4 activation collision and circuit removal ..... 523
Figure G.1 - Preemption Request ..... 524
Figure G.2 - Connection Rejection ..... 525
Figure G.3 - Preemption Accepted ..... 525
Figure G.4 - Connection Established ..... 525
Figure G.5 - Link Reset Diagram ..... 526
Figure H.1 - Generic NL_Port ..... 528
Figure H.2 - Server NL_Port Clock Sync Context ..... 529
Figure H.3 - Client NL_Port Clock Sync Context ..... 529
Figure H.4 - Server Clock Sync Implementation (Basic Approach) ..... 530
Figure H.5 - Client Clock Sync Implementation (Basic Approach) ..... 530
Figure H.6 - ELS Clock Sync Model - Point-to-Point ..... 530
Figure H.7 - Client Clock Drift ..... 531
Figure H.8 - Client Clock Sync Logic Model (Rate Adjusted) ..... 538
Figure H.9 - Rate Adjustment Hardware Assists for Client Clock Sync ..... 539
Figure H.10 - Client Clock Sync Implementation (Link Delay Fix) ..... 539
Figure H.11 - Server Clock Sync Implementation (Unload Error Fix) ..... 540
Figure H.12 - Client Clock Drift (Monotonic) ..... 541
Figure H.13 - ELS Clock Sync Model – Fabric ..... 542
Figure H.14 - ELS Clock Sync Model – Loop ..... 545
Figure H.15 - Application of Clock Synchronization to Tactical Avionics ..... 548
Figure I.1 - Three configurations supported by the speed negotiation requirements ..... 551
Figure I.2 - Example worst case timing for t_fail ..... 553
Figure I.3 - Example worst case timing for t_ncycl using Rx_LOS ..... 554
Figure I.4 - Example worst case timing for t_ncinit using Pass sync_test ..... 555
Figure I.5 - Example worst case timing for t_wake ..... 556
Figure I.6 - Example of maximum single disruption, Wait_for_signal ..... 557
Figure I.7 - Example of maximum single disruption, Slow_wait ..... 558
Figure I.8 - Example of maximum single disruption, Negotiate_master ..... 559
Figure I.9 - Example where hub is at maximum port speed ..... 559
Figure I.10 - Example of maximum disruption group - Wait_for_signal ..... 560
Figure I.11 - Example of maximum disruption group - Slow_wait ..... 561
Figure I.12 - Example of maximum disruption group - Negotiate_master ..... 562
Figure I.13 - Example of maximum single disruption overall ..... 563
Figure I.14 - Physical architecture of a port with a separate transceiver component ..... 565
Figure K.1 - Case Study ..... 570

Copyright International Organization for Standardization
Provided by IHS under license with ISO
No reproduction or networking permitted without license from IHS Not for Resale

Table 1 - Comparison of ISO and American numbering conventions ..... 51
Table 2 - Data rate abbreviations ..... 51
Table 3 - Symbols ..... 55
Table 4 - Bit designations ..... 74
Table 5 - Conversion Example ..... 75
Table 6 - Valid Data Characters ..... 77
Table 7 - Valid Special Characters ..... 81
Table 8 - Delayed Code Violation example ..... 82
Table 9 - Frame Delimiters ..... 84
Table 10 - Primitive Signals ..... 85
Table 11 - Primitive Sequences ..... 87
Table 12 - FC_Port states ..... 96
Table 13 - Frame byte order ..... 109
Table 14 - Frame_Header ..... 111
Table 15 - R_CTL - Type Code Summary ..... 112
Table 16 - Device_Data Information Categories ..... 113
Table 17 - Data Descriptor Payload ..... 113
Table 18 - FC-4 Link_Data Information Categories ..... 113
Table 19 - Video_Data Information Categories ..... 114
Table 20 - Extended Routing Information Categories ..... 114
Table 21 - Domain Controller and Well-known address identifiers ..... 115
Table 22 - CS_CTL field - Class 1 ..... 116
Table 23 - CS_CTL field - Class 2 ..... 116
Table 24 - CS_CTL field - Class 3 ..... 116
Table 25 - CS_CTL field - Class 4 ..... 117
Table 26 - Priority Field - Class 1 and Class 6 ..... 118
Table 27 - Priority Field ..... 119
Table 28 - TYPE codes - Link Service ..... 120
Table 29 - TYPE codes - Video_Data ..... 120
Table 30 - TYPE codes - FC-4 (Device_Data and Link_Data) ..... 121
Table 31 - Exchange/Sequence Control (F_CTL) ..... 123
Table 32 - Continue Sequence Condition Bits Definition ..... 127
Table 33 - Abort Sequence Condition Bits Definition by Sequence Initiator ..... 128
Table 34 - Abort Sequence Condition Bits Definition by Sequence Recipient ..... 129
Table 35 - F_CTL bit interactions on Data frames ..... 130
Table 36 - F_CTL bit interactions on ACK, BSY or RJT ..... 131
Table 37 - DF_CTL bit definition ..... 132
Table 38 - ESP_Header and ESP_Trailer in a frame ..... 138
Table 39 - Network_Header ..... 138
Table 40 - Association_Header ..... 139
Table 41 - Association_Header Validity bits (Word 0, Bits 31 to 24) ..... 140
Table 42 - Allowable Data frame delimiters ..... 142
Table 43 - ACK Frames by Class ..... 144
Table 44 - Link_Response Frames by Class ..... 144
Table 45 - Link_Control Information Categories ..... 145
Table 46 - Link_Control frame delimiters ..... 146
Table 47 - ACK precedence ..... 147
Table 48 - F_BSY Reason Codes ..... 150
Table 49 - P_BSY code format ..... 151
Table 50 - P_BSY action codes ..... 151
Table 51 - P_BSY Reason Codes ..... 152
Table 52 - Reject Code format ..... 153
Table 53 - Reject Action Codes ..... 154
Table 54 - Reject Reason Codes ..... 154

Copyright International Organization for Standardization
Provided by IHS under license with ISO
No reproduction or networking permitted without license from IHS Not for Resale

Table 55 - Basic Link Service Information Categories ..... 164
Table 56 - ABTS Parameter Field Definitions ..... 164
Table 57 - BA_ACC Payload ..... 169
Table 58 - BA_RJT Payload Format ..... 171
Table 59 - BA_RJT reason codes ..... 171
Table 60 - BA_RJT Reason Code Explanation ..... 172
Table 61 - Extended Link Routing Bits and Information Categories ..... 174
Table 62 - ELS_Command codes ..... 175
Table 63 - Responses to Received ELSs ..... 177
Table 64 - ABTX Payload ..... 179
Table 65 - Recovery Qualifier Values ..... 180
Table 66 - ABTX LS_ACC Payload ..... 180
Table 67 - ADVC Payload ..... 181
Table 68 - ADVC LS_ACC Payload ..... 182
Table 69 - ECHO Payload ..... 183
Table 70 - ECHO LS_ACC Payload ..... 183
Table 71 - ESTC Payload ..... 184
Table 72 - ESTS Payload ..... 185
Table 73 - ESTS LS_ACC Payload ..... 185
Table 74 - LOGO Payload ..... 187
Table 75 - LOGO LS_ACC Payload ..... 187
Table 76 - RCS Payload ..... 188
Table 77 - RCS LS_ACC Payload ..... 188
Table 78 - Connection Status Codes ..... 189
Table 79 - RES Payload ..... 190
Table 80 - RES LS_ACC Payload ..... 190
Table 81 - RLS Payload ..... 191
Table 82 - RLS LS_ACC Payload ..... 191
Table 83 - RSS Payload ..... 192
Table 84 - RSS LS_ACC Payload ..... 192
Table 85 - RTV Payload ..... 193
Table 86 - RTV LS_ACC Payload ..... 193
Table 87 - RRQ Payload ..... 195
Table 88 - RRQ LS_ACC Payload ..... 195
Table 89 - RSI Payload ..... 196
Table 90 - RSI LS_ACC Payload ..... 196
Table 91 - TEST Payload ..... 197
Table 92 - FAN Payload ..... 198
Table 93 - LINIT Payload ..... 199
Table 94 - Initialization Function ..... 199
Table 95 - LINIT LS_ACC Payload ..... 199
Table 96 - LINIT Status ..... 199
Table 97 - LSTS Payload ..... 200
Table 98 - LSTS LS_ACC Payload ..... 200
Table 99 - FC-FLA Compliance Level ..... 201
Table 100 - Loop State ..... 202
Table 101 - RSCN Payload ..... 204
Table 102 - Generic affected Port_ID page ..... 204
Table 103 - RSCN Event Qualifier values ..... 205
Table 104 - Address Format ..... 205
Table 105 - RSCN LS_ACC Payload ..... 206
Table 106 - SCR Payload ..... 206
Table 107 - Registration Function ..... 207
Table 108 - SCR LS_ACC Payload ..... 207
Table 109 - PRLI Payload ..... 208
Table 110 - PRLI service parameter page format ..... 208
Table 111 - PRLI LS_ACC Payload ..... 209

--`,,```,,,,````-`-`,,`,,`,`,,`---
Copyright International Organization for Standardization
Provided by IHS under license with ISO
No reproduction or networking permitted without license from IHS
Not for Resale

Table 112 - PRLI LS_ACC service parameter response page format ..... 210
Table 113 - PRLI accept response code ..... 211
Table 114 - PRLO Payload ..... 212
Table 115 - PRLO logout parameter page format ..... 213
Table 116 - PRLO LS_ACC Payload ..... 214
Table 117 - PRLO LS_ACC logout parameter response page format ..... 215
Table 118 - PRLO accept response code ..... 216
Table 119 - TPLS Payload ..... 217
Table 120 - TPLS image pair ID page format ..... 217
Table 121 - TPLS LS_ACC Payload ..... 218
Table 122 - TPLS response page format ..... 219
Table 123 - TPLS accept response code ..... 220
Table 124 - FARP_REQ Request Payload Item ..... 221
Table 125 - FARP_REQ Match Address Code Points ..... 223
Table 126 - FARP_REQ Address Fields ..... 224
Table 127 - Responder Action ..... 224
Table 128 - FARP_REPLY Request Payload ..... 225
Table 129 - FARP_REPLY Address Fields ..... 227
Table 130 - FARP_REPLY LS_ACC Payload ..... 227
Table 131 - RNID Payload ..... 228
Table 132 - Node Identification Data Format ..... 228
Table 133 - RNID Accept Payload ..... 229
Table 134 - Node Identification Data Format ..... 229
Table 135 - Common Identification Data ..... 230
Table 136 - General Topology Specific Identification Data ..... 231
Table 137 - Associated Type ..... 232
Table 138 - Multi-function device bit definitions ..... 233
Table 139 - Node Management ..... 233
Table 140 - IP Version ..... 234
Table 141 - RLIR Payload ..... 236
Table 142 - Link Incident Record Format ..... 236
Table 143 - Common Link Incident Record Data ..... 237
Table 144 - Time Stamp Format values ..... 238
Table 145 - Incident Qualifier ..... 239
Table 146 - Incident Code values ..... 240
Table 147 - RLIR LS_ACC Payload ..... 241
Table 148 - LIRR Payload ..... 242
Table 149 - Registration Function ..... 243
Table 150 - Link Incident Record-Registration Format ..... 243
Table 151 - LIRR LS_ACC Payload ..... 243
Table 152 - Get Alias_ID Payload ..... 244
Table 153 - Get Alias_ID LS_ACC Payload ..... 245
Table 154 - Fabric Activate Alias_ID Payload ..... 246
Table 155 - Fabric Activate Alias_ID LS_ACC Payload ..... 246
Table 156 - Fabric Deactivate Alias_ID Payload ..... 247
Table 157 - Fabric Deactivate Alias_ID LS_ACC Payload ..... 247
Table 158 - N_Port Activate Alias_ID Payload ..... 248
Table 159 - N_Port Activate Alias_ID LS_ACC Payload ..... 249
Table 160 - N_Port Deactivate Alias_ID Payload ..... 249
Table 161 - N_Port Deactivate Alias_ID LS_ACC Payload ..... 250
Table 162 - QoSR Payload ..... 251
Table 163 - QoSR LS_ACC Payload ..... 253
Table 164 - RVCS Payload ..... 255
Table 165 - RVCS LS_ACC Payload ..... 255
Table 166 - Class 4 VC Status Block entry ..... 255
Table 167 - ADISC Payload ..... 257
Table 168 - ADISC LS_ACC Payload ..... 257

Copyright International Organization for Standardization
Provided by IHS under license with ISO
No reproduction or networking permitted without license from IHS Not for Resale

Table 169 - Response summary to FDISC/PDISC ..... 258
Table 170 - TPRLO Payload ..... 259
Table 171 - TPRLO logout parameter page format ..... 259
Table 172 - TPRLO LS_ACC Payload ..... 259
Table 173 - LCLM Payload ..... 263
Table 174 - LCLM Commands ..... 264
Table 175 - Global capabilities ..... 264
Table 176 - N_Port and node Name Field Values ..... 264
Table 177 - LCLM LS_ACC Payload ..... 265
Table 178 - Global capabilities ..... 265
Table 179 - RPS Payload ..... 266
Table 180 - Flag field bit definitions ..... 267
Table 181 - RPS LS_ACC Payload ..... 267
Table 182 - Flag field bit definitions ..... 267
Table 183 - Port Status ..... 268
Table 184 - L_Port_Extension ..... 268
Table 185 - L_Port Status ..... 269
Table 186 - RPL Payload ..... 270
Table 187 - Maximum Size values ..... 270
Table 188 - RPL LS_ACC Payload ..... 271
Table 189 - Port Number Block ..... 271
Table 190 - RPBC Payload ..... 272
Table 191 - ELS Buffer Parameters Field ..... 272
Table 192 - RPL LS_ACC Payload ..... 273
Table 193 - RNFT Payload ..... 273
Table 194 - RNFT LS_ACC Payload ..... 274
Table 195 - RNFT FC-4 Entry ..... 274
Table 196 - SRL Payload ..... 275
Table 197 - Flag field definitions ..... 276
Table 198 - SRL LS_ACC Payload ..... 276
Table 199 - SBRP Payload ..... 277
Table 200 - SBRP LS_ACC Payload ..... 279
Table 201 - RPSC Payload ..... 280
Table 202 - RPSC LS_ACC Payload ..... 280
Table 203 - REC Payload ..... 281
Table 204 - REC LS_ACC Payload ..... 282
Table 205 - LS_RJT Reason Codes ..... 284
Table 206 - LS_RJT Reason Code Explanation ..... 285
Table 207 - NAA identifiers ..... 304
Table 208 - IEEE 48-bit address format ..... 304
Table 209 - IEEE extended format ..... 305
Table 210 - Locally assigned format ..... 306
Table 211 - 32-bit IP address format ..... 306
Table 212 - IEEE Registered ..... 306
Table 213 - IEEE Registered Extended ..... 307
Table 214 - EUI-64 Mapped Name_Identifier Format ..... 308
Table 215 - Bit Position Map ..... 308
Table 216 - FLOGI, PLOGI or LS_ACC Payload ..... 318
Table 217 - Common Service Parameter applicability ..... 319
Table 218 - Common Service Parameters - FLOGI ..... 320
Table 219 - Common Service Parameters - PLOGI and PLOGI LS_ACC ..... 321
Table 220 - Common Service Parameters - FLOGI LS_ACC ..... 321
Table 221 - Clock Synchronization Applicability ..... 324
Table 222 - Class Service Parameters Applicability ..... 326
Table 223 - Class Service Parameters - FLOGI ..... 328
Table 224 - Class Service Parameters - PLOGI and PLOGI LS_ACC ..... 329
Table 225 - Class Service Parameters - FLOGI LS_ACC ..... 329

Copyright International Organization for Standardization
Provided by IHS under license with ISO
No reproduction or networking permitted without license from IHS
Not for Resale

Table 226 - Intermix Mode Support ..... 330
Table 227 - Stacked Connect-request support Login Bits ..... 330
Table 228 - Sequential delivery support ..... 331
Table 229 - Fabric Login Priority and Preemption Support ..... 331
Table 230 - Class 2 and 3 Preference Bit Function ..... 332
Table 231 - Relationship between Preferred delivery and sequential delivery ..... 333
Table 232 - DiffServ QoS bit definition ..... 334
Table 233 - Initial Process_Associator Bits Definition ..... 334
Table 234 - ACK_0 Support Conditions (Initiator Control) ..... 335
Table 235 - ACK_0 Support Conditions (Recipient Control) ..... 336
Table 236 - Error Policy Bits Definition ..... 337
Table 237 - Categories per Sequence Bits Definition ..... 338
Table 238 - Concurrent Sequences field meaning ..... 339
Table 239 - End-to-end Credit Field Meaning ..... 339
Table 240 - Login Extension Page format ..... 342
Table 241 - Page Code Definitions ..... 342
Table 242 - Vendor Specific Page format ..... 342
Table 243 - N_Port Clock Synchronization QoS ..... 343
Table 244 - FLOGI/PLOGI CS_QoS_Request ..... 343
Table 245 - Fx_Port Clock Synchronization QoS ..... 345
Table 246 - Exchange Status Block ..... 370
Table 247 - Sequence Status Block ..... 372
Table 248 - Flow control applicability ..... 374
Table 249 - Buffer participation ..... 375
Table 250 - End-to-end flow control management ..... 377
Table 251 - Buffer-to-buffer flow control management ..... 385
Table 252 - Integrated Class 2 flow control management ..... 396
Table 253 - Segmentation and reassembly rules summary ..... 401
Table 254 - Responses to connect-request (SOFc1) ..... 408
Table 255 - Responses to Preemption Requests ..... 415
Table 256 - Link Error Status Block format for RLS command ..... 431
Table 257 - Detailed errors and actions ..... 432
Table 258 - Address Resolution ..... 438
Table 259 - Bandwidth Allocation Example ..... 453
Table 260 - Frame delimiter usage ..... 461
Table 261 - CSR Payload ..... 472
Table 262 - CSR Clock Sync Mode Meaning ..... 472
Table 263 - CSR LS_ACC Payload ..... 473
Table 264 - CSU Clock Sync Mode Meaning ..... 473
Table 265 - CSU Payload ..... 474
Table 266 - Clock Count Field Meaning ..... 475
Table 267 - Neutral Disparity Character Values ..... 477
Table 268 - Timing parameters with a range ..... 493
Table 269 - Constant timing parameters ..... 493
Table A.1 - Sample FC-2 frame ..... 497
Table A.2 - Sample ACK_1 without CRC ..... 497
Table A.3 - F(x) ..... 497
Table A.4 - X**32 F(x) + X**k L(x) ..... 498
Table A.5 - R(x) ..... 498
Table A.6 - L(x) + R(x) = R$(x) ..... 498
Table A.7 - M(x) ..... 498
Table A.8 - M(x) - (10B) ..... 499
Table B.1 - F_CTL for Class 1, Class 2, and Class 6 frame level protocols ..... 505
Table B.2 - F_CTL for Class 3 frame level protocol ..... 505
Table B.3 - Sequence level protocol example ..... 507
Table C.1 - Case 1 ..... 511
Table C.2 - Case 2 ..... 511

Copyright International Organization for Standardization
Provided by IHS under license with ISO
No reproduction or networking permitted without license from IHS Not for Resale

Table C.3 - Case 3 ..... 512
Table C.4 - Case 4 ..... 512
Table C.5 - F_CTL for example Exchange ..... 513
Table E.1 - Link Failure Counters and management ..... 517
Table H.1 - Parameters used in analysis ..... 532
Table H.2 - Example of analysis results ..... 532
Table H.3 - Parameters used in analysis ..... 533
Table H.4 - Parameters used in analysis ..... 534
Table H.5 - Parameters used in analysis ..... 535
Table H.6 - Parameters used in analysis ..... 536
Table H.7 - Parameters used in analysis ..... 543
Table H.8 - Example of analysis results ..... 543
Table H.9 - Parameters used in analysis ..... 546
Table K.1 - IEEE 48 bit address WWN format ..... 568
Table K.2 - Mapped EUI-64 address ..... 568
Table K.3 - IEEE Extended WWN format ..... 569
Table K.4 - Mapped EUI-64 address ..... 569
Table K.5 - IEEE Registered WWN format ..... 569
Table K.6 - Mapped EUI-64 address ..... 569

Copyright International Organization for Standardization
Provided by IHS under license with ISO
No reproduction or networking permitted without license from IHS Not for Resale

# INFORMATION TECHNOLOGY – FIBRE CHANNEL –

## Part 251: Framing and signalling (FC-FS)

## FOREWORD

1) ISO (International Organization for Standardization) and IEC (International Electrotechnical Commission) form the specialized system for worldwide standardization. National bodies that are members of ISO or IEC participate in the development of International Standards. Their preparation is entrusted to technical committees; any ISO and IEC member body interested in the subject dealt with may participate in this preparatory work. International governmental and non-governmental organizations liaising with ISO and IEC also participate in this preparation.

2) In the field of information technology, ISO and IEC have established a joint technical committee, ISO/IEC JTC 1. Draft International Standards adopted by the joint technical committee are circulated to national bodies for voting. Publication as an International Standard requires approval by at least 75 % of the national bodies casting a vote.

3) The formal decisions or agreements of IEC and ISO on technical matters express, as nearly as possible, an international consensus of opinion on the relevant subjects since each technical committee has representation from all interested IEC and ISO member bodies.

4) IEC, ISO and ISO/IEC publications have the form of recommendations for international use and are accepted by IEC and ISO member bodies in that sense. While all reasonable efforts are made to ensure that the technical content of IEC, ISO and ISO/IEC publications is accurate, IEC or ISO cannot be held responsible for the way in which they are used or for any misinterpretation by any end user.

5) In order to promote international uniformity, IEC and ISO member bodies undertake to apply IEC, ISO and ISO/IEC publications transparently to the maximum extent possible in their national and regional publications. Any divergence between any ISO/IEC publication and the corresponding national or regional publication should be clearly indicated in the latter.

6) ISO and IEC provide no marking procedure to indicate their approval and cannot be rendered responsible for any equipment declared to be in conformity with an ISO/IEC publication.

7) All users should ensure that they have the latest edition of this publication.

8) No liability shall attach to IEC or ISO or its directors, employees, servants or agents including individual experts and members of their technical committees and IEC or ISO member bodies for any personal injury, property damage or other damage of any nature whatsoever, whether direct or indirect, or for costs (including legal fees) and expenses arising out of the publication of, use of, or reliance upon, this ISO/IEC publication or any other IEC, ISO or ISO/IEC publications.

9) Attention is drawn to the normative references cited in this publication. Use of the referenced publications is indispensable for the correct application of this publication.

IEC and ISO draw attention to the fact that it is claimed that compliance with this document may involve the use of patents as indicated below.

Cisco Systems, Inc. has informed IEC and ISO that it has patent applications or granted patents.

ISO and IEC take no position concerning the evidence, validity and scope of this putative patent right. The holder of this putative patent right has assured IEC and ISO that they are willing to negotiate free licences or licences under reasonable and non-discriminatory terms and conditions with applicants throughout the world. In this respect, the statement of the holder of this putative patent right is registered with IEC and ISO. Information may be obtained from:

--`,,```,,,,````-`-`,,`,,`,`,,`---

Copyright International Organization for Standardization
Provided by IHS under license with ISO
No reproduction or networking permitted without license from IHS Not for Resale

Cisco Systems, Inc
Dan Lang Legal
170 West Tasman Drive
San Jose, CA95134
USA
e-mail: standards-ipr@cisco.com

IBM Corporation has informed IEC and ISO that it has patent applications or granted patents as listed below and possibly others not yet identified:

4,486,739 / US; 4,995,056 / US; 5,136,410/US; 5,151,977 / US; 5,260,933 / US; US2003/0103504A1; US 2003/0135620A1

ISO and IEC take no position concerning the evidence, validity and scope of this putative patent right. The holder of this putative patent right has assured IEC and ISO that they are willing to negotiate free licences or licences under reasonable and non-discriminatory terms and conditions with applicants throughout the world. In this respect, the statement of the holder of this putative patent right is registered with IEC and ISO. Information may be obtained from:

IBM Corporation
Brian Hinman
Vice President licensing intellectual property systems
North Castle Drive
Armonk, NY, 10504
USA
e-mail: hinman@us.ibm.com

Brocade Communication Systems, Inc. has informed IEC and ISO that it has patent applications or granted patents as listed below:

ISO and IEC take no position concerning the evidence, validity and scope of this putative patent right. The holder of this putative patent right has assured IEC and ISO that they are willing to negotiate free licences or licences under reasonable and non-discriminatory terms and conditions with applicants throughout the world. In this respect, the statement of the holder of this putative patent right is registered with IEC and ISO. Information may be obtained from:

Brocade Communication Systems Inc.
Office of the General Counsel
1745 Technology Drive
San Jose, CA 95110
USA
e-mail: generalcounsel@brocade.com

--`,,```,,,,````-`-`,,`,,`,`,,`---
Copyright International Organization for Standardization
Provided by IHS under license with ISO
No reproduction or networking permitted without license from IHS
Not for Resale

International Standard ISO/IEC 14165-251 was prepared by subcommittee 25: Interconnection of information technology equipment, of ISO/IEC joint technical committee 1: Information technology.

The list of all currently available parts of the ISO/IEC 14165 series, under the general title *Information technology – Fibre channel,* can be found on the IEC web site.

This International Standard has been approved by vote of the member bodies, and the voting results may be obtained from the address given on the second title page.

This publication has been drafted in accordance with the ISO/IEC Directives, Part 2.

--`,,```,,,,````-`-`,,`,,`,`,,`---

Copyright International Organization for Standardization
Provided by IHS under license with ISO
No reproduction or networking permitted without license from IHS Not for Resale

# INTRODUCTION

This International Standard combines the following Fibre Channel standards (for full reference, see Bibliography):

ANSI INCITS 230-1994 (R1999)

ANSI INCITS 230-1994/Amendment 1-1996 (R2001)

ANSI INCITS 230-1994/Amendment 2-1999 (R2001)

ANSI INCITS 297-1996 (R2002)

ANSI INCITS 303-1998 (R2002)

This International Standard includes the following changes with respect to the above publications:

— definitions of existing services have been clarified and/or improved based on experience with existing implementations;
— outdated functions and features have been deleted;
— additional link services in support of new functions defined by the Fibre Channel family of documents have been included;
— definition of other capabilities which enhance the performance of existing Fibre Channel products and fit them for new applications.

Copyright International Organization for Standardization
Provided by IHS under license with ISO
No reproduction or networking permitted without license from IHS Not for Resale

# INFORMATION TECHNOLOGY – FIBRE CHANNEL –

## Part 251: Framing and signalling (FC-FS)

## 1 Scope

This part of ISO/IEC 14165 describes the framing and signalling interface of a high-performance serial link for support of FC-4s associated with upper level protocols (for example SCSI, IP, SBCCS, VI).

## 2 Normative references

The following referenced documents are indispensable for the application of this document. For dated references, only the edition cited applies. For undated references, the latest edition of the referenced document (including any amendments) applies.

## 2.1 Approved references

[1] SO/IEC 14165-116, *Information technology – Fibre channel – Part 116: 10 Gigabit fibre channel (10GFC)*

[2] ISO/IEC 14165-122, *Information technology – Fibre channel – Part 122: Arbitrated loop-2 (FC-AL-2)*

[3] ISO/IEC 9314-2:1989, *Information processing systems – Fibre distributed data interface (FDDI) – Part 2: Token ring media access control (FDDI-MAC)*

[4] ISO/IEC TR 8802-1, *Information technology – Telecommunications and information exchange between systems - Local and metropolitan area networks – Specific requirements – Part 1: Overview of Local Area Network Standards*

[5] ISO/IEC 8802-2, *Information technology – Telecommunications and information exchange between systems – Local and metropolitan area networks – Specific requirements – Part 2: Logical link control*

[6] ISO/IEC 14165-414, *Information technology – Fibre channel – Part 414: Generic services – 4 (FC-GS-4)* [ANSI INCITS 387-2004]

## 2.2 References under development

[7] ISO/IEC 14165-133, *Information technology – Fibre channel – Part 133: Switch fabric–3 (FC-SW-3)*, [ANSI INCITS 384-2004]

[8] ISO/IEC 14165-142, *Information technology – Fibre channel – Part 142: - Physical interfaces–2 (FC-PI-2)*, [ANSI INCITS 404-2006]

[9] ISO/IEC 14776-223, *Information technology – Small computer system interface (SCSI) – Part 223: Fibre channel protocol for SCSI, Version 3 (FCP-3)* [ANSI INCITS 416-2006]

[10] ISO/IEC 14776-453, *Information technology – Small computer system interface (SCSI) – Part 453: Primary commands-3 (SPC-3)* [ANSI INCITS 408-2005]

## 2.3 Other references

All references in this subclause were correct at the time of approval of this International Standard. The provisions of the referenced specifications, as identified in this subclause, are valid within the context of this International Standard. The reference to a specification within this International Standard does not give it any further status

--`,,```,,,,````-`-`,,`,,`,`,,`---

Copyright International Organization for Standardization
Provided by IHS under license with ISO
No reproduction or networking permitted without license from IHS Not for Resale

within ISO/IEC; in particular, it does not give the referenced specification the status of an International Standard.

IETF Requests for Comments (RFCs) may be obtained directly from the IETF web site at http://www.ietf.org/rfc.html.

[11] INCITS TR-20:1998, *Information technology - Fibre Channel – Fabric Loop Attach (FC-FLA)*

[12] RFC 2625, *IP and ARP over Fibre Channel*

[13] RFC 2597, *Assured Forwarding PHB Group*, June 1999

[14] RFC 2598, *An Expedited Forwarding PHB*, June 1999

[15] RFC 768, *User Datagram Protocol*, August1980.

[16] RFC 791, *Internet Protocol*, September 1981.

[17] RFC 793, *Transmission Control Protocol*, September 1981.

[18] RFC 854, *Telnet Protocol Specification*, May 1983.

[19] RFC 1157, *A Simple Network Management Protocol (SNMP)*, May 1990.

[20] RFC 1901, *Introduction to Community-based SNMPv2*, January 1996

[21] RFC 2373, *IP Version 6 Addressing Architecture*, July 1998.

[22] RFC 2460, *Internet Protocol, Version 6 (IPv6) Specification*, December 1998.

[23] RFC 2616, *Hypertext Transfer Protocol -- HTTP/1.1*, June 1999.

[24] RFC 2818, *HTTP Over TLS*, May 2000.

[25] RFC 2406, *IP Encapsulating Security Payload (ESP)*, November 1998.

Copyright International Organization for Standardization
Provided by IHS under license with ISO
No reproduction or networking permitted without license from IHS Not for Resale

# 3 Definitions, abbreviations, conventions and keywords

## 3.1 Definitions

**3.1.1 acknowledged class:** Any class of service that acknowledges a transfer.

**3.1.2 Active:** The state of Sequence Initiator until all the Data frames for the Sequence have been transmitted. The state of Sequence Recipient until all the Data frames for the Sequence have been received (see 17.6.1).

**3.1.3 address identifier:** An address value used to identify source (S_ID) or destination (D_ID) of a frame (see 9.4).

**3.1.4 Alias_ID:** An address identifier recognized by one or more Nx_Ports or the Alias Server, if the Nx_Port has registered with the Alias Server as a member of a group. An Alias_ID may be common to multiple Nx_Ports (see clause 24).

**3.1.5 Alias_Token:** A 12-byte field to indicate the type of Alias_ID and certain properties associated with the Alias_ID (see 12.3.2.33).

**3.1.6 Arbitrated Loop topology:** A Fibre Channel topology where L_Ports use arbitration to gain access to the loop (See FC-AL-2).

**3.1.7 BB_Buffer:** The buffer associated with buffer-to-buffer flow control (see 18.5).

**3.1.8 buffer-to-buffer credit (BB_Credit):** The controller parameter for buffer-to-buffer flow control (see 18.5.3).

**3.1.9 B_Port:** A bridge port is a fabric inter-element port used to connect bridge devices with E_Ports on a switch. The B_Port provides a subset of the E_Port functionality (see [7], FC-SW-3.).

**3.1.10 buffer:** A logical construct that holds a single frame.

**3.1.11 byte:** An eight-bit entity with its least significant bit denoted as bit 0 and most significant bit as bit 7. The most significant bit is shown on the left side, unless specifically indicated otherwise.

**3.1.12 character:** An 8B10B encoding of a data byte or control value transmitted and interpreted by the FC-1 layer of Fibre Channel (see clause 5).

**3.1.13 circuit:** A bi-directional path within the Fabric.

**3.1.14 circuit-oriented frames:** Frames sent through a Class 4 circuit.

**3.1.15 classes of service:** Type of frame delivery services used by the communicating Nx_Ports that may also be supported through a fabric (see 4.8 and clause 13).

**3.1.16 Class 1 service:** A service that establishes a dedicated connection between two communicating Nx_Ports (see 4.8.2 and 13.2).

**3.1.17 Class 2 service:** A service that multiplexes frames at frame boundaries to or from one or more Nx_Ports with acknowledgement provided (see 4.8.3 and 13.3).

**3.1.18 Class 3 service:** A service that multiplexes frames at frame boundaries to or from one or more Nx_Ports without acknowledgement (see 4.8.4 and 13.4).

**3.1.19 Class 4 circuit:** A pair of unidirectional Virtual Circuits between two communicating Nx_Ports (see 25.3.5).

**3.1.20 Class 4 service:** A fabric service that establishes Virtual Circuits to provide fractional bandwidth service

Copyright International Organization for Standardization
Provided by IHS under license with ISO
No reproduction or networking permitted without license from IHS Not for Resale

between communicating Nx_Ports. The fabric service multiplexes frames at frame boundaries using in-order delivery to or from one or more Nx_Ports with acknowledgment provided (see 4.8.5, 13.6 and clause 25).

**3.1.21 Class 4 Circuit Initiator:** The Nx_Port that initiates a Class 4 Circuit setup to establish a Class 4 Circuit (see 25.3.5).

**3.1.22 Class 4 Circuit Recipient:** The Nx_Port that receives a Class 4 Circuit setup request from a Class 4 Circuit Initiator and accepts the setup request by transmitting a valid response (see 25.3.5).

**3.1.23 Class 6 service:** A service that allows an Nx_Port to establish simultaneous dedicated connections with multiple Nx_Ports (see 4.8.6 and 13.7).

**3.1.24 Class F service:** A service that multiplexes frames at frame boundaries with acknowledgement provided. The service is used for control and coordination of the internal behavior of the Fabric (see [7], FC-SW-3).

**3.1.25 Class N service:** A class of service other than Class F (see [7], FC-SW-3).

**3.1.26 code violation:** An error condition that occurs when a received Transmission Character is not able to be decoded to a valid data byte or special code using the validity checking rules specified by the transmission code (see 5.3.3).

**3.1.27 comma:** The seven-bit sequence ‘0011111’ b or ‘1100000’ b in an 8B10B encoded stream (see 5.5.1).

**3.1.28 Common Controlling Entity :** The entity that controls and manages the resources for a Hunt Group (see clause 22)

**3.1.29 concatenation:** A logical operation that “joins together” strings of data and is represented with the symbol “||”. Two or more fields are concatenated to provide a reference of uniqueness (for example, S_ID||X_ID).

**3.1.30 Connection Initiator:** The Nx_Port that initiates a Class 1 or 6 Connection with a destination Nx_Port through a connect-request and also receives a valid response from the destination Nx_Port to complete the Connection establishment (see clause 20).

**3.1.31 Connection Recipient:** The destination Nx_Port that receives a Class 1 or 6 connect-request from the Connection Initiator and accepts establishment of the Connection by transmitting a valid response (see clause 20).

**3.1.32 connectionless buffers:** Receive buffers participating in connectionless service and capable of receiving connectionless frames (see clause 18).

**3.1.33 connectionless frames:** Frames participating in connectionless service (i.e., Class 1 or Class 6 frames with $SOF_{c1}$, Class 2, Class 3 and Class 4 frames referred to individually or collectively) (see clause 18).

**3.1.34 connectionless service:** Communication between two Nx_Ports performed without a dedicated connection.

**3.1.35 continuously increasing relative offset:** The condition of operation that requires frames ordered by SEQ_CNT within a Sequence to have a larger relative offset value in each frame (see 15.6.2.4.1).

**3.1.36 credit:** The maximum number of buffers available at a recipient to receive frames from a transmitting FC_Port (see 18.3).

**3.1.37 current running disparity:** The running disparity present at a transmitter when encoding of a valid data byte or special code is initiated, or at a receiver when decoding of a Transmission Character is initiated (see 5.3.3).

**3.1.38 data block:** An ordered string of application data contained in a single Information Category.

**3.1.39 data character:** Any Transmission Character associated by the transmission code with a valid data byte.

Copyright International Organization for Standardization
Provided by IHS under license with ISO
No reproduction or networking permitted without license from IHS Not for Resale

(see 5.1).

**3.1.40 data frame:** An FC-4 Device_Data frame, an FC-4 Video_Data frame, or a Link_Data frame (see clause 11).

**3.1.41 decoding:** Validity checking of received Transmission Characters and generation of valid data bytes and special codes from those characters (see 5.3).

**3.1.42 dedicated connection:** A communicating circuit guaranteed and retained by the Fabric for two given Nx_Ports.

**3.1.43 delimiter:** An Ordered Set used to indicate a frame boundary (see 5.5, 8.3 and 8.7).

**3.1.44 Destination_Identifier (D_ID):** The address identifier used to indicate the targeted destination Nx_Port of the transmitted frame (see 9.4).

**3.1.45 destination Nx_Port:** The Nx_Port to where a frame is targeted.

**3.1.46 discard policy:** An error handling policy where a Sequence Recipient is able to discard Data frames received following detection of a missing frame in a Sequence (see 21.6.3).

**3.1.47 disparity:** The difference between the number of ones and zeros in a Transmission Character (see 5.5.3).

**3.1.48 Domain Controller:** The entity that controls activity within a given domain. Each Domain Controller is allocated an address (see [7], FC-SW-3.).

**3.1.49 Domain_ID:** The highest or most significant hierarchical level in the three-level addressing hierarchy (i.e., the most significant byte of the address identifier) (see 9.4.2 and [7], FC-SW-3).

**3.1.50 EE_Buffer:** Buffer(s) associated with end-to-end flow control (see 18.4).

**3.1.51 encoding:** Generation of Transmission Characters from valid data bytes and special codes (see 5.3).

**3.1.52 E_Port:** A Fabric expansion port that connects to another E_Port or B_Port to create an Inter-Switch Link (see [7], FC-SW-3).

**3.1.53 Exchange:** The unit of protocol activity that transfers information between a specific Originator Nx_Port and specific Responder Nx_Port using one or more related non-concurrent Sequences that may flow in the same or opposite directions. The Exchange is identified by an OX_ID and a RX_ID (see clause 17).

**3.1.54 Exchange_Identifier (X_ID):** A collective reference to OX_ID and RX_ID (see 9.2.1).

**3.1.55 Exchange Status Block:** A logical construct that contains the status of an Exchange. An Originator Nx_Port has an Originator Exchange Status Block and the Responder Nx_Port has a Responder Exchange Status Block for each active Exchange (see 4.12.4.4 and 17.8.1).

**3.1.56 exclusive connection:** A Class 1 or Class 6 dedicated connection without Intermix (see 4.8.2 and 13.5).

**3.1.57 F_Port:** The LCF within the Fabric that attaches to an N_Port through a link. An F_Port is addressable by the N_Port attached to it, with a common well-known address identifier (hex ‘FF FF FE’) (see 9.4.2).

**3.1.58 Fabric:** The entity that interconnects Nx_Ports attached to it and is capable of routing frames by using the D_ID information in a FC-2 frame header (see 4.7.3).

**3.1.59 Fabric_Name:** A Name_Identifier associated with a Fabric (see clause 14 and 15.6.4).

Copyright International Organization for Standardization
Provided by IHS under license with ISO
No reproduction or networking permitted without license from IHS Not for Resale

**3.1.60 FC_Port:** A port that is capable of transmitting or receiving Fibre Channel frames according to the requirements defined in this standard. FC_Ports include N_Ports, NL_Ports, Nx_Ports, L_Ports, F_Ports, FL_Ports, Fx_Ports, E_Ports, and B_Ports.

**3.1.61 FL_Port:** An F_Port that contains Arbitrated Loop functions associated with Arbitrated Loop topology (see FC-AL-2).

**3.1.62 fractional bandwidth:** A portion of the total bandwidth available on a path (see clause 25).

**3.1.63 frame:** An indivisible unit of information used by FC-2 (see 8.1).

**3.1.64 F_Port_Name:** A Name_Identifier associated with an F_Port (see 9.4.2).

**3.1.65 frame content:** The information contained in a frame between its SOF and EOF delimiters, excluding the delimiters (see 8.3.1).

**3.1.66 Frame Type 0:** A type of Data frame used for Link Control (see clause 8.5).

**3.1.67 Frame Type 1:** A type of Data frame used for data exchange (see clause 8.5).

**3.1.68 Fx_Port:** A switch port capable of operating as an F_Port or FL_Port (see FC-AL-2).

**3.1.69 Hunt Group:** A set of Nx_Ports with a common Alias_ID managed by a Common Controlling Entity. The management and initialization of Hunt Groups is outside the scope of this standard (see clause 22).

**3.1.70 Hypertext Transfer Protocol:** A protocol for communicating various formats of text with embedded links and display controls (see [23], RFC 2616).

**3.1.71 Idle:** An Ordered Set of four Transmission Characters that are normally transmitted between frames (see 5.5).

**3.1.72 Infinite buffer:** A terminology to indicate that at FC-2 level, the amount of buffer available at the Sequence Recipient is unlimited.

**3.1.73 Information Category:** The category to which the frame Payload belongs (for example, Solicited Data, Unsolicited Data, Solicited Control and Unsolicited Control). Information category is indicated by the INFORMATION field in the frame header if the value of the ROUTING field in the frame header is ‘0000’b (Device_Data), ‘0010’b (Extended Link Services), ‘0011’b (FC-4 Link_Data), ‘0100’b (Video_Data), or ‘1111’b (Extended Routing) (see 9.3.3).

**3.1.74 Information Unit:** An organized collection of data specified by an upper level to be transferred as a single Sequence by FC-2.

**3.1.75 initial relative offset:** A relative offset value specified at the sending end by an upper level for a given data block and used by the sending FC-2 in the first frame of that data block (see data block, and relative offset). Initial relative offset value may be zero or non-zero (see clause 19).

**3.1.76 Intermix:** A service that interleaves Class 2 and Class 3 frames on an established Class 1 or Class 6 Connection (see 4.9 and 13.5).

**3.1.77 Internet Protocol:** A protocol for communicating data packets between identified endpoints on a multipoint network. It is in wide use in versions 4 and 6 (See [16], RFC 791 for version 4 or [21], RFC 2373 and [22] RFC 2460 for version 6).

**3.1.78 IP Address:** An identifier of an endpoint in Internet Protocol.

**3.1.79 link:** Two unidirectional fibres transmitting in opposite directions and their associated transmitters and

Copyright International Organization for Standardization
Provided by IHS under license with ISO
No reproduction or networking permitted without license from IHS Not for Resale

receivers.

**3.1.80 Link Control Facility (LCF):** A hardware facility that attaches to an end of a link and manages transmission and reception of data. It is contained within each FC_Port (see 4.4).

**3.1.81 local Fx_Port:** The Fx_Port to which an Nx_Port is directly attached by a link or an Arbitrated Loop (see remote Fx_Port).

**3.1.82 L_Port:** A port that contains Arbitrated Loop functions associated with Arbitrated Loop topology (see FC-AL-2).

**3.1.83 Name_Identifier:** A 64-bit identifier, with a 60-bit value preceded by a 4-bit Network_Address_Authority Identifier, used to identify entities in Fibre Channel (for example, Nx_Port, node, F_Port, or Fabric) (see clause 14).

**3.1.84 Network_Address_Authority (NAA):** An organization such as IEEE that administers network addresses (see clause 14).

**3.1.85 Network_Address_Authority (NAA) identifier:** A four-bit identifier defined to indicate a Network_Address_Authority (NAA) (see clause 14).

**3.1.86 NL_Port:** An N_Port that contains the Loop Port State Machine defined in FC-AL-2. It may be attached via a link to one or more NL_Ports and zero or more FL_Ports in an Arbitrated Loop topology. Without the qualifier "Public" or "Private," an NL_Port is assumed to be a Public NL_Port.

**3.1.87 node:** A collection of one or more Nx_Ports controlled by a level above FC-2 (see 4.1).

**3.1.88 Node_Name:** A Name_Identifier associated with a node (see Clause 14 and 15.6.4).

**3.1.89 N_Port:** A hardware entity that includes a LCF but not Arbitrated Loop functions associated with Arbitrated Loop topology, and has the ability to act as an Originator, a Responder, or both. Well-known addresses are considered to be N_Ports (See [2], FC-AL-2, and 9.4.2).

**3.1.90 N_Port_ID:** A Fabric unique address identifier of an Nx_Port. The identifier may be assigned by the fabric during the initialization procedure or by other procedures not defined in this standard. The identifier is used in the S_ID and D_ID fields of a frame (see 9.4).

**3.1.91 N_Port_Name:** A Name_Identifier associated with an Nx_Port (see clause 14 and 15.6.3).

**3.1.92 Nx_Port:** A port capable of operating as an N_Port or Public NL_Port, but not as a Private NL_Port. By use of the term Nx_Port, this standard neither specifies nor constrains the behavior of Private NL_Ports (see [2] FC-AL-2 ).

**3.1.93 open:** The period of time starting when a Sequence or an Exchange is initiated until that Sequence or Exchange is normally or abnormally terminated (see 17.6.1).

**3.1.94 Ordered Set:** A Transmission Word composed of a special character in its first (left-most) position and data characters in its remaining positions (see 5.5).

**3.1.95 Originator:** The logical function associated with an Nx_Port responsible for originating an Exchange.

**3.1.96 Originator Exchange_ID (OX_ID):** An identifier assigned by an Originator to identify an Exchange (see 4.12.4.2).

**3.1.97 Payload:** Contents of the Data Field of a frame, excluding Optional Headers and fill bytes, if present (see table 13, and clause 8, clause 10, and 11.1).

**3.1.98 Policy:** The rule used to determine how frames not received are handled during error recovery (see

--`,,```,,,,````-`-`,,`,,`,`,,`---

Copyright International Organization for Standardization
Provided by IHS under license with ISO
No reproduction or networking permitted without license from IHS Not for Resale

21.6.3).

**3.1.99 Primitive Sequence:** An Ordered Set transmitted repeatedly and continuously until a specified response is received (see 5.5.4 and 17.6.1).

**3.1.100 Primitive Signal:** An Ordered Set designated to have a special meaning. (for example, an Idle or R_RDY) (see 5.5.3).

**3.1.101 Private NL_Port:** An NL_Port that does not attempt a Fabric Login and does not transmit OPN(00,x) (see [2], FC-AL-2).

**3.1.102 Process_Associator:** A value used in the Association_Header to identify a process or a group of processes within a node. Process_Associator is the mechanism a process uses to address another communicating process. Process_Associator is a generic reference to Originator Process_Associator and Responder Process_Associator (see 10.4).

**3.1.103 Public NL_Port:** An NL_Port that attempts a Fabric Login (see [2], FC-AL-2).

**3.1.104 random relative offset:** The relationship specified between relative offset values contained in frame (n) and frame (n+1) of an Information Category within a single Sequence. For a given Information Category I within a single Sequence, initial relative offset ($RO_I$) value for a frame (n+1) is unrelated to that of the previous frame (n). (see initial relative offset and continuously increasing relative offset) (see 15.6.2.4.3).

**3.1.105 receiver:** The portion of a LCF dedicated to receiving an encoded bit stream from a fibre, converting this bit stream into Transmission Characters, and decoding these Transmission Characters using the rules specified by this standard (see 4.1).

**3.1.106 relative offset:** The displacement, expressed in bytes, of the first byte of a Payload related to an upper level defined origin for a given Information Category (see continuously increasing relative offset, random relative offset and 4.13.3).

**3.1.107 relative offset space:** A virtual address space defined by the sending upper level for a set of information carried in one or more information units.

**3.1.108 remote Fx_Port:** Relative to an Nx_Port that is communicating through a fabric to a remote Nx_Port, the Fx_Port to which the remote Nx_Port is directly attached (see local Fx_Port).

**3.1.109 Responder:** The logical function in an Nx_Port responsible for supporting the Exchange initiated by the Originator in another Nx_Port.

**3.1.110 Responder Exchange_ID (RX_ID):** An identifier assigned by a Responder to identify an Exchange and meaningful only to the Responder.

**3.1.111 run length:** Number of consecutive identical bits in the transmitted signal for example, the pattern ‘0011111010’ b has a maximum run length of five and a minimum run length of one (see 5.3.3.1).

**3.1.112 running disparity:** A binary value indicating the cumulative encoded signal unbalance between the one and zero signal state of all Transmission Characters since Transmission Word synchronization was been achieved (see 5.3.3.1).

**3.1.113 Secured Hypertext Transfer Protocol:** A protocol for communicating various formats of text with embedded links and display controls used in combination with a subordinate protocol that provides security features (see [24], RFC 2818).

**3.1.114 Sequence:** A set of one or more Data frames with a common Sequence_ID (SEQ_ID), transmitted unidirectionally from one Nx_Port to another Nx_Port with a corresponding response, if applicable, transmitted in response to each Data frame (see clause 17).

Copyright International Organization for Standardization
Provided by IHS under license with ISO
No reproduction or networking permitted without license from IHS Not for Resale

**3.1.115 Sequence_ID (SEQ_ID):** An identifier used to identify a Sequence (see clause 17).

**3.1.116 Sequence Initiator:** The Nx_Port that initiates a Sequence and transmits Data frames to the destination Nx_Port (see clause 17).

**3.1.117 Sequence Recipient:** The Nx_Port that receives Data frames from the Sequence Initiator and, if applicable, transmits responses (i.e., Link_Control frames) to the Sequence Initiator (see clause 17).

**3.1.118 Sequence Status Block:** A logical construct that tracks the status of a Sequence. Both the Sequence Initiator and the Sequence Recipient have a Sequence Status Block for each concurrently active Sequence (see 4.12.3.3 and 17.8.2).

**3.1.119 Signal Failure:** A condition in which an FC_Port capable of the Speed Negotiation procedure shall initiate that procedure (see 28.1).

**3.1.120 Simple Network Management Protocol:** A protocol for communicating simply structured management information. It is in wide use in versions 1 and 2 (See [19], RFC 1157, for version 1 or [20], RFC 1901, for version 2).

**3.1.121 Source_Identifier (S_ID):** The address identifier used to indicate the source Nx_Port of the transmitted frame (see 9.4.4).

**3.1.122 source Nx_Port:** The Nx_Port where a frame is originated.

**3.1.123 special character:** Any Transmission Character considered valid by the transmission code but not equated to a valid data byte. Special characters are provided by the transmission code for use in denoting special functions (see 5.1).

**3.1.124 special code:** A code that, when encoded using the rules specified by the transmission code, results in a special character. Special codes are typically associated with control signals related to protocol management (for example, K28.5) (see 5.2).

**3.1.125 streamed Sequence:** A new sequence initiated by a Sequence Initiator in any class of service for an Exchange while it already has Sequences Open for that Exchange (see clause 17).

**3.1.126 synchronization:** Receiver identification of a Transmission Word boundary (see 6.1.4 and 6.1.5).

**3.1.127 TCP Port Number:** An identifier of a destination in Transmission Control Protocol.

**3.1.128 Telnet:** A protocol for communicating control of a character-oriented terminal over Transmission Control Protocol (see [18], RFC 854).

**3.1.129 Transmission Character:** Any valid or invalid encoded character transmitted across a physical interface specified by FC-0. Valid Transmission Characters are specified by the transmission code and include Data and special characters (see 5.1).

**3.1.130 transmission code:** A means of encoding data to enhance its transmission characteristics. The transmission code specified by this standard is byte-oriented, with valid data bytes and special codes encoded into 10-bit Transmission Characters (see clause 5).

**3.1.131 Transmission Control Protocol:** A protocol communicating reliable flow-controlled byte streams over Internet Protocol allowing independent concurrent streams to multiple destinations at any IP Address (see [17] RFC 793).

**3.1.132 Transmission Word:** A string of four contiguous Transmission Characters occurring on boundaries that are zero modulo 4 from a previously received or transmitted special character (see 5.4).

**3.1.133 transmitter:** The portion of a LCF dedicated to converting valid data bytes and special codes into

Copyright International Organization for Standardization
Provided by IHS under license with ISO
No reproduction or networking permitted without license from IHS Not for Resale

Transmission Characters using the rules specified by the transmission code, converting these Transmission Characters into a bit stream, and transmitting this bit stream onto the transmission medium (optical or electrical) (see 6.2).

**3.1.134 UDP Port Number:** An identifier of a destination in User Datagram Protocol.

**3.1.135 Unrecognized Ordered Set:** A Transmission Word containing a K28.5 in its first (left-most) position that is not defined to have meaning by this standard, but that may be defined by other standards (for example see [2], FC-AL-2. (see 5.5.1).

**3.1.136 Upper Level:** A level above FC-2.

**3.1.137 Upper Level Protocol (ULP):** The protocol user of FC-4 (see clause 4).

**3.1.138 User Datagram Protocol:** A protocol communicating a packet stream with no incremental reliability over Internet Protocol allowing multiple independent concurrent destinations at any IP Address (see [15] RFC 768).

**3.1.139 valid data byte:** A string of eight contiguous bits within FC-1 that represents a value with 0 to 255, inclusive (see 5.2).

**3.1.140 valid frame:** A frame received with a valid SOF, a valid EOF, valid data characters, and proper CRC of the Frame_Header and Data Field (See clause 8).

**3.1.141 Virtual Circuit (VC):** A unidirectional path between two communicating Nx_Ports through a fabric that permits Class 4 service to be used. Two Virtual Circuits are required to form a Class 4 Circuit (see 4.8.5 and 25.3.5).

**3.1.142 Virtual Circuit Credit (VC_Credit):** The number of receiver buffers allocated to a Virtual Circuit by an F_Port. It represents the maximum number of frames that an Nx_Port may transmit without causing a buffer overrun condition at the F_Port receiver (see 13.6 and clause 25).

**3.1.143 Virtual Circuit Identifier (VC_ID):** An identifier associated with either the Originator or Responder for a Virtual Circuit (see 9.5.2).

**3.1.144 Virtual path:** A fixed route through a Fabric in support of a Virtual Circuit.

**3.1.145 Well-known addresses:** A set of address identifiers defined in this standard to access Generic Services functions. (for example, a name server) (see 9.4).

**3.1.146 word:** A string of four contiguous bytes occurring on boundaries that are zero modulo 4 from a specified reference.

**3.1.147 Worldwide_Name:** A Name_Identifier that is worldwide unique, and represented by a 64-bit value (see clause 14).

## 3.2 Editorial conventions

In this standard, a number of conditions, mechanisms, sequences, parameters, events, states, or similar terms are printed with the first letter of each word in upper-case and the rest lower-case (for example, Exchange, Sequence). Any lower case uses of these words have the normal technical English meanings.

Lists sequenced by letters (for example, a-red, b-blue, c-green) show no ordering relationship between the listed items. Numbered lists (for example, 1-red, 2-blue, 3-green) show an ordering relationship between the listed items.

Copyright International Organization for Standardization
Provided by IHS under license with ISO
No reproduction or networking permitted without license from IHS Not for Resale

An alphanumeric list (for example, a, b, c) of items indicate the items in the list are unordered. A numeric list (for example, 1, 2, 3) of items indicate the items in the list are ordered (i.e., item 1 shall occur or complete before item 2).

In case of any conflict between figures, tables, and text, the text takes precedence. Exceptions to this convention are indicated in the appropriate sections.

In all of the figures, tables, and text of this document, the most significant bit of a binary quantity is shown on the left side. Exceptions to this convention are indicated in the appropriate sections.

In the various ladder diagrams that show a sequence of events, the vertical axis (i.e., up and down the page) shows time from top to bottom.

The ISO convention of numbering is used (i.e., the thousands and higher multiples are separated by a space). A comma is used as the decimal point. A comparison of the American and ISO conventions is shown in table 1.

**Table 1 - Comparison of ISO and American numbering conventions**

| ISO | American |
|---|---|
| 0,6 | 0.6 |
| 1 000 | 1,000 |
| 1 323 462,9 | 1,323,462.9 |

Numbers in quotes and immediately followed by a lower-case b (for example, ‘0101’ b) are binary values. Numbers or upper case letters in quotes immediately proceeded by the word hex (for example, hex ‘FA23’) are hexadecimal values. Numbers not in this notation are decimal values. When X or Y is used in a hexadecimal notation, it represents a hexadecimal value of the range hex '0' to hex 'F'

## 3.3 Abbreviations, acronyms and symbols

### 3.3.1 Data rate abbreviations

The data rate abbreviations are shown in table 2. The exact data rate is used in the tables and the abbreviated form is used in text. Note that 1 062,5 Gbits/s is the preferred ISO method and is used instead of 1 062,5 Mbits/s where it makes sense to do so.

**Table 2 - Data rate abbreviations**

| Abbreviation | Data Rate |
|---|---|
| 1 063 Mbits/s | 1 062,5 Mbits/s |
| 2 125 Mbits/s | 2 125 Mbits/s |
| 4 250 Mbits/s | 4 250 Mbits/s |

### 3.3.2 Acronyms and other abbreviations

**ABTS** Abort Sequence

**ABTX** Abort Exchange

**ACK** Acknowledgement

**ADVC** Advise Credit

Copyright International Organization for Standardization
Provided by IHS under license with ISO
No reproduction or networking permitted without license from IHS Not for Resale

**AL_PA** Arbitrated Loop Physical Address
**BA_ACC** Basic Accept
**BB_Credit** buffer-to-buffer Credit
**BB_Credit_CNT** buffer-to-buffer Credit_Count
**BB_SCs** buffer-to-buffer State Change (SOF)
**BB_SCr** buffer-to-buffer State Change (R_RDY)
**BB_SC_N** buffer-to-buffer State Change Number
**BSY** busy
**Credit_CNT** Credit_Count
**CR_TOV** Connection Request_Timeout value
**CTI** Circuit Initiator
**CTR** Circuit Recipient
**DF_CTL** Data_Field Control
**D_ID** Destination_Identifier
**DSCP** Differentiated Services Code Point
**E_D_TOV** Error_Detect_Timeout value
**EE_Credit** End-to-end Credit
**EE_Credit_CNT** End-to-end Credit_Count
**ELS** Extended Link Service
**EOF** End-of-Frame
**ESB** Exchange Status Block
**ESTC** Estimate Credit
**ESTS** Establish Streaming
**FACT** Fabric Activate Alias
**F_BSY** Fabric_Port_Busy
**F_BSY(DF)** F_BSY response to a Data frame
**F_BSY(LC)** F_BSY response to any Link_Control except P_BSY
**FC** Fibre Channel
**FC-2** Fibre Channel level 2
**FC-4** Fibre Channel level 4
**FCS** Frame Check Sequence
**F_CTL** Frame Control
**FDACT** Fabric Deactivate Alias
**FLOGI** Fabric Login
**F_RJT** Fabric Reject
**FT_0** Frame Type 0 (see 8.5)
**FT_1** Frame Type 1 (see 8.5)
**GAID** Get Alias_ID

Copyright International Organization for Standardization
Provided by IHS under license with ISO
No reproduction or networking permitted without license from IHS Not for Resale

| | |
|---|---|
| **HBA** | Host Bus Adapter |
| **hex** | hexadecimal notation |
| **HG_ID** | Hunt Group Identifier |
| **HTTP** | Hypertext Transfer Protocol |
| **HTTPS** | Secured Hypertext Transfer Protocol |
| **IEEE** | Institute of Electrical and Electronics Engineers |
| **IP** | Internet Protocol |
| **LCF** | Link Control Facility |
| **LCR** | Link Credit Reset |
| **LESB** | Link Error Status Block (see 21.8) |
| **LF1** | NOS Receive State |
| **LF2** | NOS Transmit State |
| **LILP** | Loop Initialization Loop Position |
| **LISA** | Loop Initialization Soft Assigned |
| **LOGO** | Logout |
| **LR** | Link Reset Primitive Sequence |
| **LR1** | LR Transmit State |
| **LR2** | LR Receive State |
| **LR3** | LRR Receive State |
| **LRR** | Link Reset Response Primitive Sequence |
| **LS_ACC** | Link Service Accept |
| **LS_Command** | Link Service Command |
| **m** | Metre |
| **MB** | MegaByte |
| **ms** | millisecond |
| **µs** | microsecond |
| **N/A** | not applicable |
| **NAA** | Network_Address_Authority |
| **NACT** | N_Port Activate Alias |
| **NAS** | Network Attached Storage |
| **NDACT** | N_Port Deactivate Alias |
| **NOP** | No Operation |
| **NOS** | Not_Operational Primitive Sequence |
| **ns** | nanosecond |
| **OL1** | OLS Transmit State |
| **OL2** | OLS Receive State |
| **OL3** | Wait for OLS State |
| **OLS** | Offline Primitive Sequence |

--`,,```,,,,````-`-`,,`,,`,`,,`---

Copyright International Organization for Standardization
Provided by IHS under license with ISO
No reproduction or networking permitted without license from IHS Not for Resale

| | |
|---|---|
| **OX_ID** | Originator Exchange_ID |
| **P_BSY** | N_Port_Busy |
| **PDISC** | Discover N_Port Service Parameters |
| **PLOGI** | N_Port Login |
| **P_RJT** | N_Port_Reject |
| **PRLI** | Process Login |
| **PRLO** | Process Logout |
| **QoSF** | Quality of Service Facilitator |
| **QoSR** | Quality of Service Request |
| **R_A_TOV** | Resource_Allocation_Timeout value |
| **R_C** | Remove Circuit |
| **RCS** | Read Connection Status |
| **R_CTL** | Routing Control |
| **RES** | Read Exchange Status Block |
| **RFC** | Request for Comments |
| **RJT** | reject |
| **RMC** | Remove Connection |
| **RNC** | Report node Capability |
| **RO** | relative offset |
| **R_RDY** | Receiver_Ready |
| **RSS** | Read Sequence Status Block |
| **R_T_TOV** | Receiver_Transmitter_Timeout value |
| **RTV** | Read Timeout Value |
| **RVCS** | Read Virtual Circuit Status |
| **Rx** | receiver |
| **RX_ID** | Responder Exchange_ID |
| **s** | second |
| **SBCCS** | Single Byte Command Code Sets |
| **SCSI** | Small Computer System Interface |
| **SCR** | State Change Registration |
| **SEQ_CNT** | Sequence Count |
| **SEQ_ID** | Sequence_ID |
| **Serdes** | Serializer/Deserializer |
| **S_ID** | Source_Identifier |
| **SNMP** | Simple Network Management Protocol |
| **SOF** | Start-of-Frame |
| **SSB** | Sequence Status Block |
| **TCP** | Transmission Control Protocol |

Copyright International Organization for Standardization
Provided by IHS under license with ISO
No reproduction or networking permitted without license from IHS Not for Resale

| | |
|---|---|
| **TPLS** | Test Process Login Status |
| **Tx** | transmitter |
| **TYPE** | Data structure type |
| **UDP** | User Datagram Protocol |
| **ULP** | Upper Level Protocol |
| **VC** | Virtual Circuit |
| **VC_Credit** | Virtual Circuit Credit |
| **VC_ID** | Virtual Circuit Identifier |
| **VC_RDY** | Virtual Circuit Ready |
| **VI** | Virtuel Interface |
| **WWN** | Worldwide_Name |
| **X_ID** | Exchange_Identifier |

### 3.3.3 Symbols

Unless indicated otherwise, the following symbols have the listed meaning.

**Table 3 - Symbols**

| | |
|---|---|
| \|\| | concatenation |
| μ | micro (for example, μm = micrometer) |
| L >> | Received from Link |
| x | multiplied by |
| * | multiplied by |
| ** | exponentiation |

## 3.4 Keywords

**3.4.1 expected:** Used to describe the behavior of the hardware or software in the design models assumed by this standard. Other hardware and software design models may also be implemented.

**3.4.2 invalid:** Used to describe an illegal or unsupported bit, byte, word, field or code value. Receipt of an invalid bit, byte, word, field or code value shall be reported as error.

**3.4.3 ignored:** Used to describe a bit, byte, word, field or code value that shall not be examined by the receiving port. The bit, byte, word, field or code value has no meaning in the specified context.

**3.4.4 mandatory:** A keyword indicating an item that is required to be implemented as defined in this standard.

**3.4.5 may:** A keyword that indicates flexibility of choice with no implied preference (equivalent to “may or may not”).

**3.4.6 may not:** A keyword that indicates flexibility of choice with no implied preference (equivalent to “may or may not”).

**3.4.7 meaningful:** A control field or bit shall be applicable and shall be interpreted by the receiver, wherever it is specified as meaningful. Wherever it is specified as “not meaningful”, it shall be ignored.

Copyright International Organization for Standardization
Provided by IHS under license with ISO
No reproduction or networking permitted without license from IHS Not for Resale

**3.4.8 obsolete:** A keyword indicating that an item was defined in a prior Fibre Channel standard but has been removed from this standard.

**3.4.9 optional:** A keyword that describes features that are not required to be implemented by this standard. However, if an optional feature defined by this standard is implemented, then it shall be implemented as defined in this standard.

**3.4.10 reserved:** A keyword referring to bits, bytes, words, fields and code values that are set aside for future standardization. A reserved bit, byte, word or field shall be set to zero, or in accordance with a future extension to this standard. Recipients are not required to check reserved bits, bytes, words or fields for zero values. Receipt of reserved code values in defined fields shall be reported as an error.

**3.4.11 shall:** A keyword indicating a mandatory requirement. Designers are required to implement all such mandatory requirements to ensure interoperability with other products that conform to this standard. This standard prescribes no specific response by a component if it receives information that violates a mandatory behavior.

**3.4.12 should:** A keyword indicating flexibility of choice with a strongly preferred alternative; equivalent to the phrase “it is strongly recommended”.

**3.4.13 should not:** A keyword indicating flexibility of choice with a strongly preferred alternative; equivalent to the phrase “it is strongly recommended not to”.

**3.4.14 vendor specific:** Functions, code values, and bits not defined by this standard and set aside for private usage between parties using this standard.

Copyright International Organization for Standardization
Provided by IHS under license with ISO
No reproduction or networking permitted without license from IHS Not for Resale

# 4 Structure and Concepts

## 4.1 Introduction

This clause provides an overview of the structure, concepts and mechanisms used in FC-FS.

Fibre Channel (FC) is logically a bi-directional, point-to-point, serial data channel, structured for high performance capability. Fibre Channel may be implemented using any combination of the following three topologies:

a) A point-to-point link between two N_Ports;
b) A set of N_Ports interconnected by a switching network called a Fabric; and
c) A set of L_Ports interconnected with a loop topology as defined in FC-AL-2 (See [2]).

This standard provides a general transport vehicle for Upper Level Protocols (ULPs) (e.g., Small Computer System Interface (SCSI) command sets, Internet Protocol (IP), and others). Proprietary and other command sets may also use and share Fibre Channel, but such use is not defined as part of this standard.

Fibre Channel is structured as a set of hierarchical functions as illustrated in figure 1. Fibre Channel Framing and Signalling interface (FC-FS) consists of related functions FC-1, FC-2, and FC-3. Each of these functions is described as a level. FC-FS does not restrict implementations to specific interfaces between these levels.

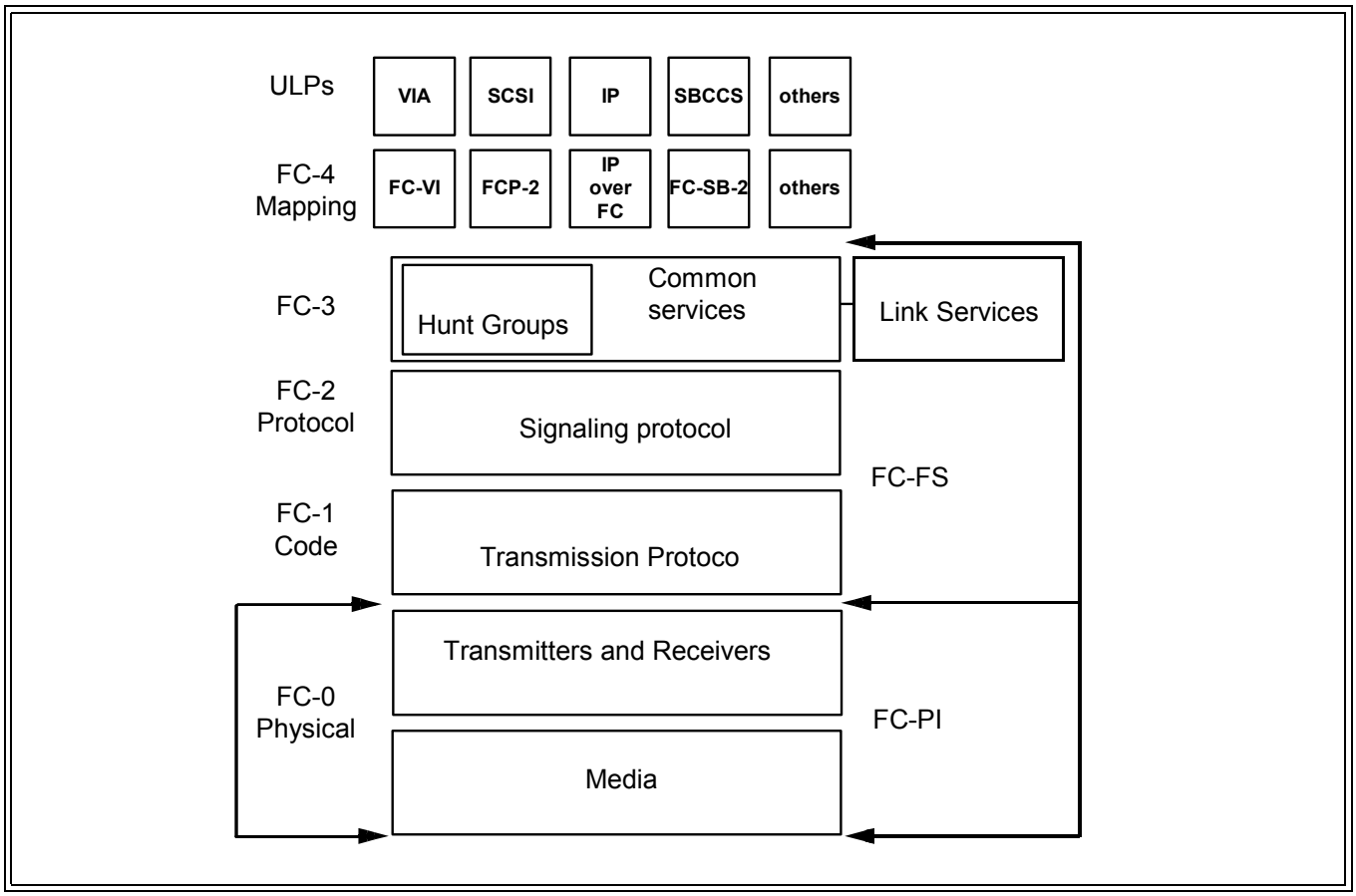


**Figure 1 - Fibre Channel Structure**

The physical interface (FC-0) consists of transmission media, transmitters, and receivers and their interfaces. Fibre, coax and twisted pair versions are defined. A variety of physical media, and associated drivers and receivers capable of operating at various speeds are specified to address variations in cable plants. See [8], FC-PI-2 and [1], 10GFC for the details.

Copyright International Organization for Standardization
Provided by IHS under license with ISO
No reproduction or networking permitted without license from IHS Not for Resale

FC-1 (see clause 5, clause 6, and clause 28) defines the transmission protocol that includes the serial encoding, decoding, and error control.

FC-2, the signalling protocol (see clause 7, clause 8, clause 9, clause 10, clause 11, clause 13, clause 14, clause 15, clause 16, clause 17, clause 18, clause 19, clause 20, clause 21, clause 23, clause 24, clause 25, clause 26, and clause 27), specifies the rules and provides mechanisms needed to transfer data blocks of data end-to-end. FC-2 defines a suite of functions and facilities available for use by an upper level. This may be more than what a given upper level requires. FC-2 functions include several classes of service, frame format definition, sequence disassembly and reassembly, exchange management, address assignment, alias address definition, multicast management, and Stacked Connect-requests.

FC-3 provides a set of services that are common across multiple Nx_Ports of a node. FC-3 includes protocols for Link Services (see clause 12) and Hunt Groups (see clause 22). The Link Services represent a mandatory function required by FC-2.

FC-4 is the highest level in the Fibre Channel standards set. An FC-4 defines the mapping between the lower levels of the Fibre Channel and an Upper Level Protocol (e.g., the SCSI and SBCCS command sets, IP, and other Upper Level Protocols (ULPs)). Fibre Channel provides a method for supporting a number of Upper Level Protocols (ULPs).

Of these levels, FC-1, FC-2, FC-3 and Link Services are integrated into this document. The Fibre Channel protocol provides a range of implementation possibilities extending from minimum cost to maximum performance. The transmission medium is isolated from the control protocol so that each implementation may use a technology best suited to the environment of use.

A Fibre Channel node is functionally configured as illustrated in figure 2. A node may support one or more Nx_Ports and one or more FC-4s. Each Nx_Port contains FC-0, FC-1 and FC-2 functions. FC-3 optionally provides the common services to multiple Nx_Ports and FC-4s.

## 4.2 FC-1 general description

The Fibre Channel transmits information using an adaptive 8B/10B code. The encoding process results in the generation of Transmission Characters. The two types of Transmission Characters defined are data and special.

Certain combinations of Transmission Characters, referred to as Ordered Sets, are designated by this standard to have special meaning. Ordered Sets are used to identify frame boundaries, transmit primitive function requests, and maintain proper link transmission characteristics during periods of inactivity.

Transmitter and receiver behavior is specified via a set of states and their interrelationships. These states are divided into Operational and Not Operational classes. Error monitoring capabilities and special operational modes are also defined for Operational receivers and transmitters.

--`,,```,,,,````-`-`,,`,,`,`,,`---
Copyright International Organization for Standardization
Provided by IHS under license with ISO
No reproduction or networking permitted without license from IHS
Not for Resale

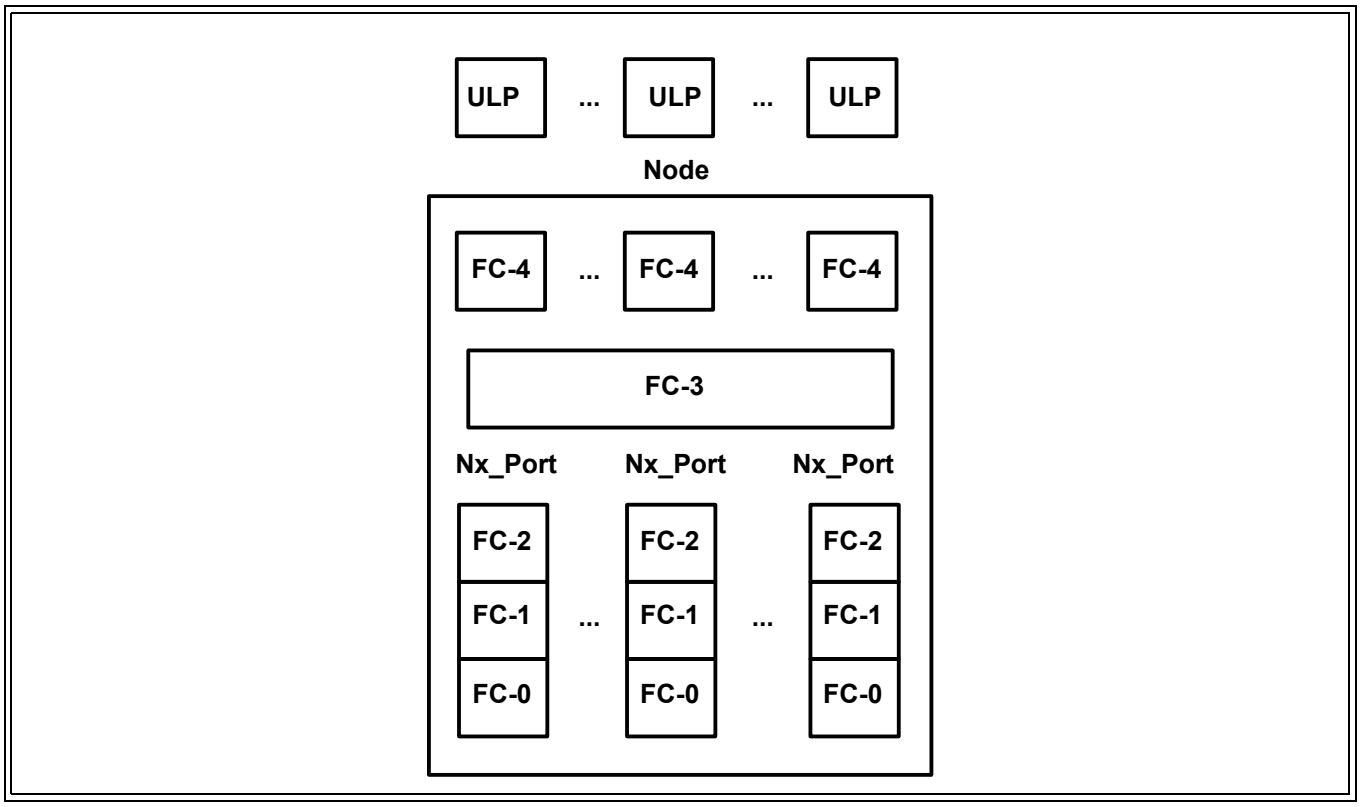


**Figure 2 - Node functional configuration**

## 4.3 FC-2 general description

The FC-2 level serves as the transport mechanism of the Fibre Channel. The transported data is transparent to FC-2 and visible to FC-3 and above.

The following concepts are defined and described:

a) node and Nx_Port and their identifiers,
b) Communication models,
c) Topologies based on the presence or absence of a Fabric,
d) Classes of service provided by the Fabric and Nx_Ports,
e) General Fabric model,
f) Building Blocks and their hierarchy,
g) Sequence and Sequence_Identifier,
h) Exchange and Exchange_Identifier,
i) Sequence Status Block,
j) Exchange Status Block,
k) Segmentation and reassembly, and
l) Error detection and recovery.

In Class 1, an Nx_Port logically performs a point-to-point communication with another Nx_Port at any given time. This statement is true regardless of the presence of a Fabric. However, multiple Nx_Ports in a node are able to simultaneously perform data transfers in parallel with single or multiple Nx_Ports contained in one or more nodes (see 4.8.2 and 13.2).

In Class 2 and Class 3 service, an Nx_Port may multiplex frames to or demultiplex frames from multiple Nx_Ports (see 4.8.3, 4.8.4, 13.3, and 13.4).

--`,,```,,,,````-`-`,,`,,`,`,,`---

Copyright International Organization for Standardization
Provided by IHS under license with ISO
No reproduction or networking permitted without license from IHS Not for Resale

In Class 4 service, an Nx_Port may multiplex frames to or demultiplex frames from multiple Nx_Ports through a fabric using a fractional bandwidth allocation protocol and Virtual Circuits (see 4.5.3, 4.8.5 and 13.6).

In Class 6, when a Switched Fabric is present that supports multicast, an Nx_Port may send a single frame to multiple destinations in an established multicast group of communicating Nx_Ports. It may also receive frames from other members of the same multicast group (see 4.8.6 and 13.7).

## 4.4 FC-FS physical model

Figure 3 depicts the FC-FS physical model and illustrates the FC-FS physical structure and components. The Fibre Channel (FC) physically consists of a minimum of two Nx_Ports, each associated with a node, interconnected by a pair of fibres - one outbound and the other inbound at each Nx_Port. This pair of unidirectional fibres transmitting in opposite directions with their associated transmitters and receivers is referred to as a link. The link is used by the interconnected Nx_Ports to perform data communication.

Physical equipment (e.g., a processor, controller, or terminal) should be interconnected to other physical equipment through these links. Attached physical equipment supports one or more nodes and each node contains one or more Nx_Ports, with each Nx_Port containing a transmitter and a receiver.

The physical model shown in figure 3 is inherently capable of simultaneous, symmetrical bi-directional flow. A Fabric may be present between the Nx_Ports and some Fabrics may not support this type of flow. From the perspective of a given Nx_Port, for instance A(1) or B(1), its transmitter sends Data frames on the outbound fibre and its receiver receives the responses on the inbound fibre.

This structure provides flexible mechanisms for attached equipment to perform simultaneous data transfers in parallel.

The Link Control facility (LCF) is a hardware facility that attaches to each end of a link and manages transmission and reception of data. It is contained within each Nx_Port and includes a transmitter and a receiver. Each LCF provides the logical interface to the Originator and/or the Responder, as applicable to a communication model.

## 4.5 Communication models

### 4.5.1 Introduction

An Nx_Port transmits Data frames as a result of transfer requests made by an upper level at its end and receives the Link_Control responses for those Data frames. An Nx_Port receives Data frames from other Nx_Ports and transmits the appropriate Link_Control responses for those frames to the proper Nx_Ports.

Copyright International Organization for Standardization
Provided by IHS under license with ISO
No reproduction or networking permitted without license from IHS Not for Resale

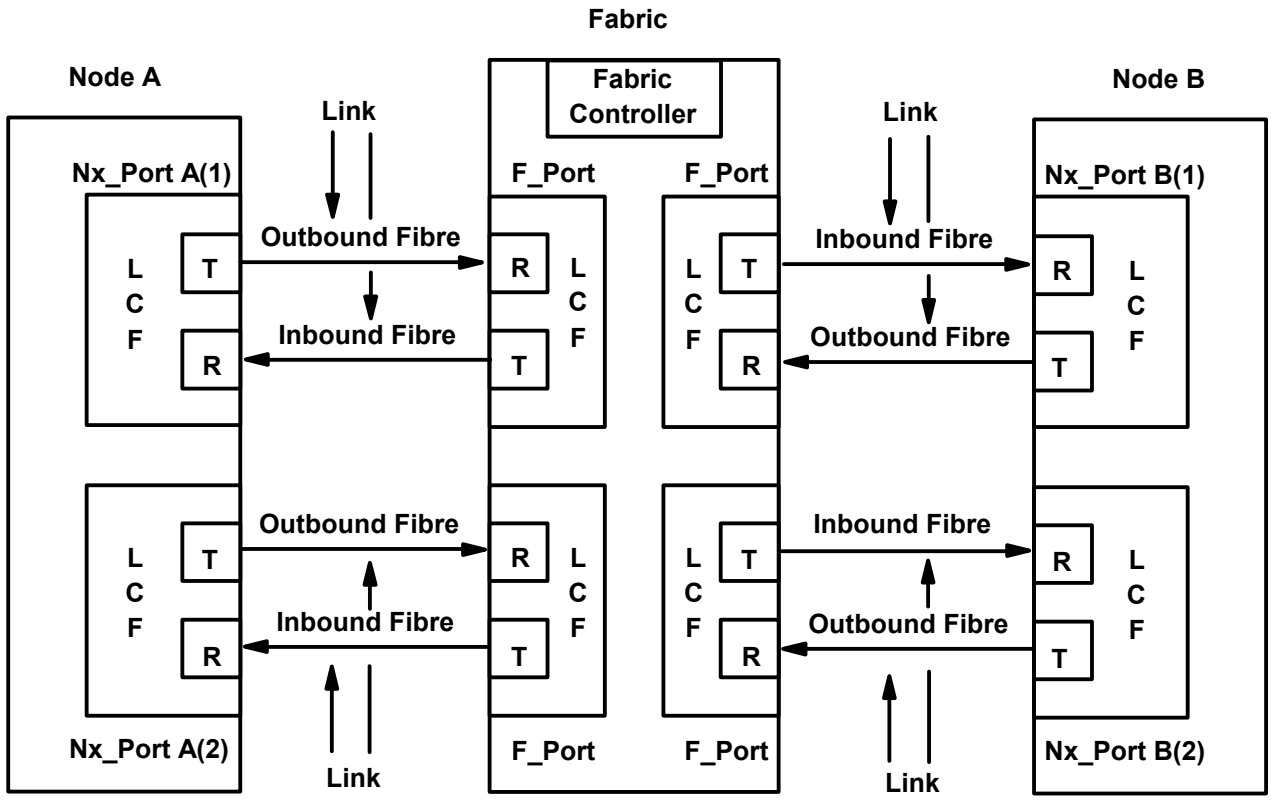


Legend:
T - transmitter
R - receiver
Fibre - Any medium supported by Fibre Channel
LCF - Link_Control_Facility
A(1), A(2) - Nx_Port addresses within Node A
B(1), B(2) - Nx_Port addresses within Node B

**Figure 3 - FC-FS physical model**

An Nx_Port may operate according to these communication models:

a) Simplex operation is defined as an Nx_Port transferring Data frames in one direction only, with Link_Control frames flowing in the opposite direction;
b) Full-duplex operation is defined as an Nx_Port simultaneously transmitting and receiving Data frames, with Link_Control frames flowing in both directions as well; or
c) Half-duplex operation is defined as an Nx_Port both transmitting and receiving data, but not simultaneously. Data frames and Link_Control frames flow in both directions, but the flow is limited, to a single direction at a time.

### 4.5.2 Hunt Group

A Hunt Group is an enhancement to the FC-FS structure of Nx_Ports. Nx_Ports are addressed using N_Port_ID. A Hunt Group is a collection of Nx_Ports that may be addressed by either a group identifier (HG_ID) or N_Port_ID. Grouping Nx_Ports and addressing them as a group makes it possible to increase bandwidth and decrease latency by eliminating the need for sending individual frames to multiple destinations.

--`,,```,,,,````-`-`,,`,,`,`,,`---
Copyright International Organization for Standardization
Provided by IHS under license with ISO
No reproduction or networking permitted without license from IHS
Not for Resale

See clause 22 for details on Hunt Groups.

#### 4.5.3 Fractional bandwidth

Class 4 provides the capability to allocate and guarantee bandwidth for multiple Nx_Ports communicating with a single Nx_Port. Class 4 also provides a way to support service quality through quality of service parameters that may be specified by an Nx_Port.

See clause 25 for details on Class 4.

## 4.6 Bandwidth

Effective transfer rate is a function of physical variants, the communication model, Payload size, fibre speed, class of service and overhead specified by this standard.

## 4.7 Topology

#### 4.7.1 Types

Topologies are defined, based on the capability and the presence or absence of Fabric between the Nx_Ports. There are three basic types:

a) Point-to-point topology
b) Fabric topology
c) Arbitrated Loop topology

The protocols specified herein are topology independent. However, attributes of the topology may restrict operation to certain communication models.

#### 4.7.2 Point-to-point topology

The Point-to-point topology is shown in figure 4, in which communication between N_Ports occurs without the use of a Fabric

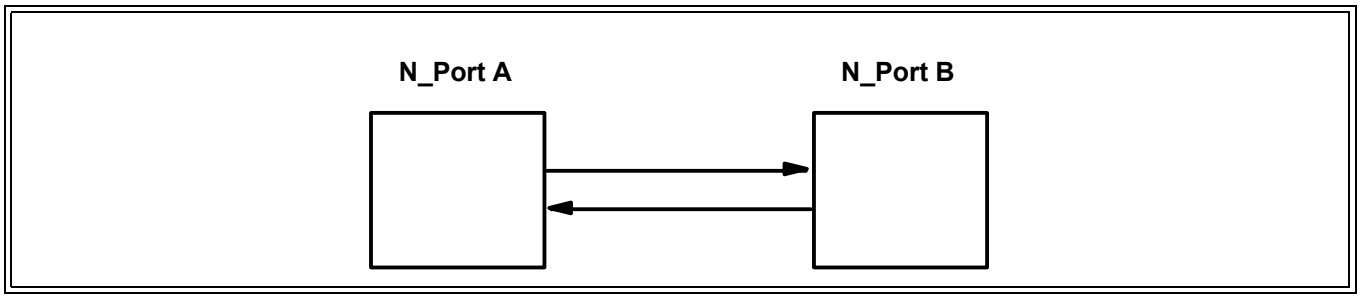


**Figure 4 - Point-to-point topology**

#### 4.7.3 Fabric topology

The Fabric topology uses the D_ID embedded in the Frame_Header to route frames through a Fabric to the desired destination Nx_Port. Figure 5 illustrates multiple N_Ports interconnected by a Fabric.

--`,,```,,,,````-`-`,,`,,`,`,,`---

Copyright International Organization for Standardization
Provided by IHS under license with ISO
No reproduction or networking permitted without license from IHS Not for Resale

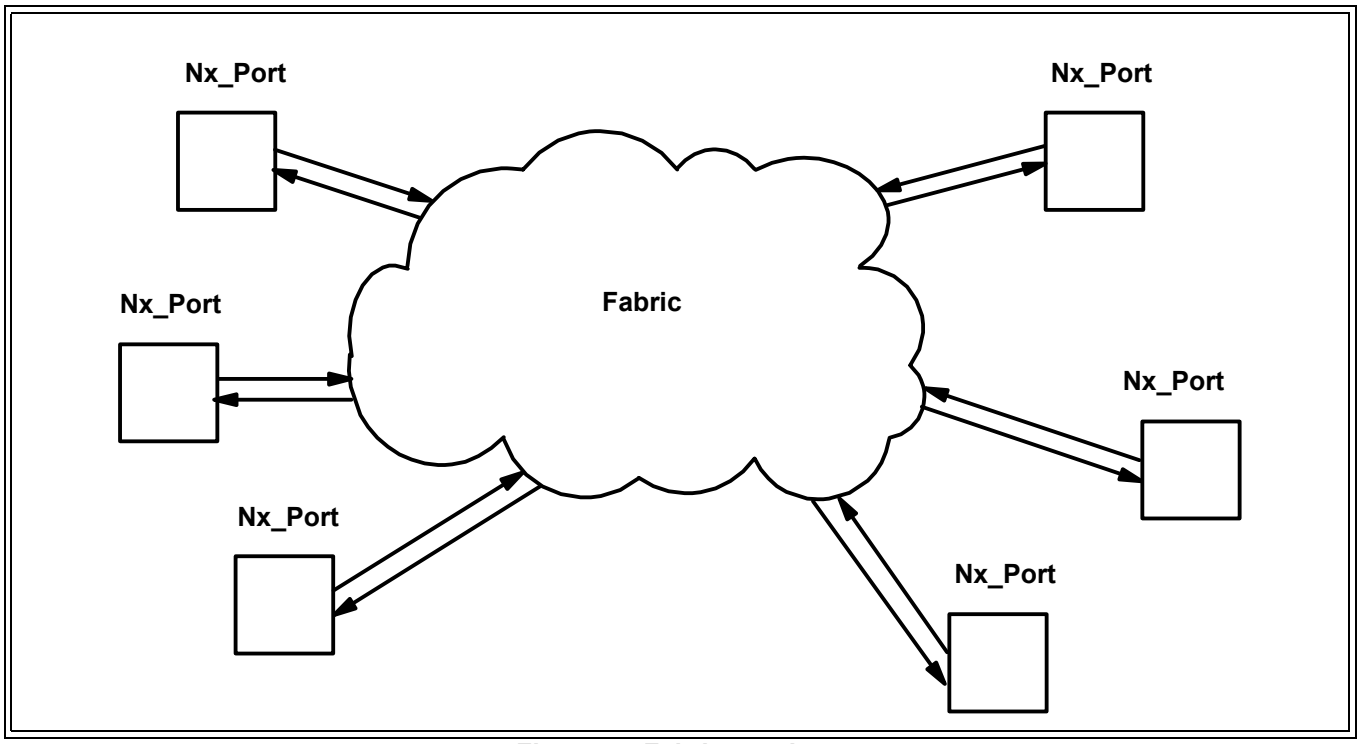


**Figure 5 - Fabric topology**

### 4.7.4 Arbitrated Loop topology

The Arbitrated Loop topology permits three or more L_Ports to communicate without the use of a Fabric, as in Fabric topology. The arbitrated loop supports a maximum of one point-to-point circuit at a time. When two L_Ports are communicating, the arbitrated loop topology supports simultaneous, symmetrical bi-directional flow.

Figure 6 illustrates two independent Arbitrated Loop configurations each with multiple L_Ports attached. Each line in the figure between L_Ports represents a single fibre. The first configuration shows an Arbitrated Loop composed only of L_Ports. The second configuration shows an Arbitrated Loop composed of one FL_Port and three L_Ports. In this topology, additional FC_Ports may be attached to the fabric element.

## 4.8 Classes of service

### 4.8.1 General

Classes of service are distinguished primarily by the methodology used in allocating and retaining the communication circuit between the communicating Nx_Ports and the level of delivery integrity required for an application. Classes 1, 2, and 3 are topology independent. However, Classes 4 and 6 require a Fabric. If the Fabric is not present, the service is provided as a special case of point-to-point. FC_Ports are not required to support all classes of service.

--`,,```,,,,````-`-`,,`,,`,`,,`---

Copyright International Organization for Standardization
Provided by IHS under license with ISO
No reproduction or networking permitted without license from IHS Not for Resale

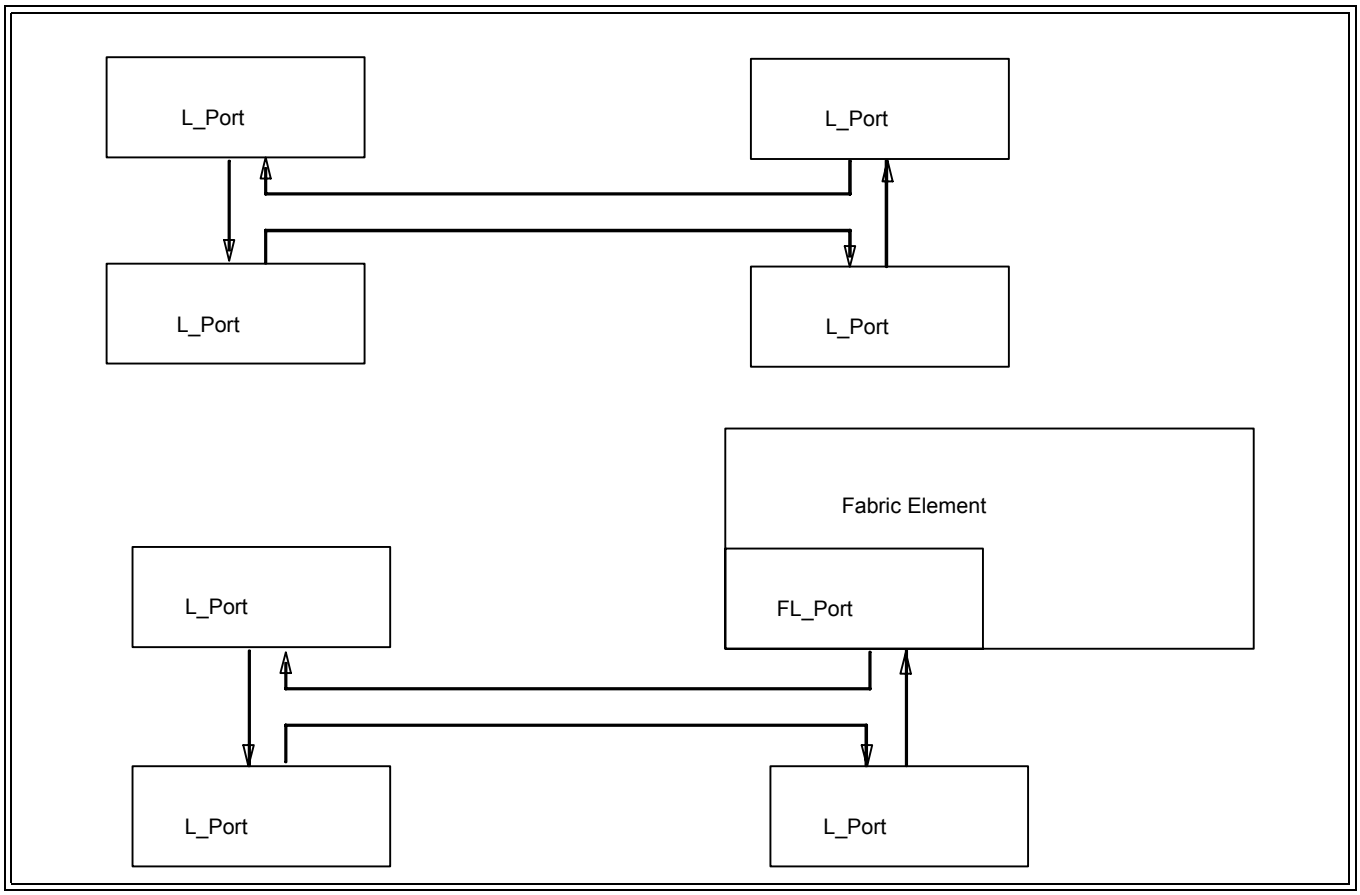


**Figure 6 - Examples of the Arbitrated Loop Topology**

### 4.8.2 Class 1 service - dedicated connection

Class 1 is a service that establishes dedicated connections. Once established, a dedicated connection is retained and guaranteed by the Fabric. This service guarantees the maximum bandwidth available between two Nx_Ports across the established connection.

Frames are delivered to the destination Nx_Port by the Fabric in the same order as they are transmitted by the source Nx_Port. If the Fabric is not present, this service becomes a special case of point-to-point.

### 4.8.3 Class 2 service - multiplex

Class 2 is a connectionless service with the Fabric multiplexing frames at frame boundaries. If a Fabric is not present, this service becomes a special case of point-to-point.

The transmitter transmits Class 2 Data frames in a sequential order within a given Sequence. However the Fabric may not guarantee the order of delivery and frames may be delivered out of order.

The Fabric or the destination Nx_Port guarantees notification of delivery in the absence of link errors. In case of link errors, notification is not guaranteed since the S_ID may not be error free.

### 4.8.4 Class 3 service - datagram

Class 3 is a connectionless service with the Fabric multiplexing frames at frame boundaries, if a Fabric is present. If a Fabric is not present, this service becomes a special case of point-to point.

Class 3 supports only unacknowledged delivery where the destination Nx_Port does not send any confirmation of

Copyright International Organization for Standardization
Provided by IHS under license with ISO
No reproduction or networking permitted without license from IHS Not for Resale

Link_Control frames on receipt of valid Data frames. Any acknowledgement of Class 3 service is beyond the scope of this standard.

The transmitter transmits Class 3 Data frames in sequential order within a given Sequence. However, the Fabric may not guarantee the order of delivery and frames may be delivered out of order.

The Fabric is expected to make a best effort to deliver the frame to the intended destination and does not issue a busy or reject frame to the source Nx_Port if unable to deliver the frame.

#### 4.8.5 Class 4 service – fractional bandwidth

Class 4 is a service that uses a virtual circuit established within a Fabric and between two communicating Nx_Ports to transmit frames to each other using a fabric-managed fractional bandwidth allocation protocol. This service requires a Fabric.

The transmitter transmits Class 4 Data frames in a sequential order within a given Sequence. In Class 4, frames are delivered to the destination Nx_Port by the Fabric in the same order as they are transmitted by the source Nx_Port.

The Fabric and destination Nx_Port guarantees notification of delivery or notification of failure to deliver in the absence of link errors. In case of link errors, notification is not guaranteed since the S_ID may not be error free.

#### 4.8.6 Class 6 – multicast connection

Class 6 allows an Nx_Port to establish simultaneous dedicated connections with multiple Nx_Ports. Once established, these dedicated connections are retained and guaranteed by the Fabric. This service guarantees maximum bandwidth available from the source Nx_Port to each destination Nx_Port across the established connections.

Class 6 is inherently uni-directional. Data flows only from the source Nx_Port to the destination Nx_Ports. All destination Nx_Ports respond with the appropriate Link_Response frames to a Multicast Server. The Multicast Server collects the Link_Response frames and returns a single Link_Response frame to the source Nx_Port. Frames are delivered to the destination Nx_Ports by the Fabric in the same order as they are transmitted by the source Nx_Port. This service requires a Fabric.

## 4.9 Intermixing other classes with Class 1 or Class 6

Intermix is an option of Class 1 and Class 6 service that allows interleaving of Class 2 and Class 3 frames during an established Connection between Nx_Ports. During a Class 1 or Class 6 Connection, an Nx_Port capable of Intermix may transmit and receive Class 2 and Class 3 frames interleaved with Class 1 frames. Class 2 and Class 3 frames may be interchanged between two connected Nx_Ports or between either of the connected Nx_Ports and other Nx_Ports. Support for the Intermix option of Class 1 and Class 6 service is indicated during Login (see 15.6.5.4.2). An Nx_Port that supports Intermix is capable of both transmitting and receiving intermixed frames. Class 4 frames are not permitted with the Intermix option.

In a point-to-point topology, both interconnected N_Ports are required to support Intermix if Intermix is to be used. In the presence of a Fabric, both the Nx_Port and the attached Fx_Port are required to support Intermix if Intermix is to be used. Fabric support for Intermix requires that the full bandwidth during a dedicated connection be maintained. Intermix permits the potentially unused Class 1 and Class 6 bandwidth to be used for transmission of Class 2 and Class 3 frames.

Copyright International Organization for Standardization
Provided by IHS under license with ISO
No reproduction or networking permitted without license from IHS Not for Resale

## 4.10 General Fabric model

### 4.10.1 General

The primary function of the Fabric is to receive the frames from a source Nx_Port and route the frames to the destination Nx_Port whose address identifier is specified in the frames. Each Nx_Port is physically attached through a link to the Fabric. FC-2 specifies the protocol between the Fabric and the attached Nx_Ports. A Fabric is characterized by a single address space where every Nx_Port has a unique N_Port_ID.

A Fabric specifies the classes of service it supports in its Service Parameters (see 15.6.9.2). Fabrics are allowed to provide the classes of service through equivalent mechanisms and/or functions. See [7], (FC-SW-3) for the details.

Figure 7 illustrates the general Fabric model. The model is conceptual and may provide the following major functions:

a) bi-directional Fabric Ports (Fx_Ports),
b) receive buffer,
c) connection Service,
d) connectionless Service, and
e) receive buffer queue management.

### 4.10.2 Fabric Ports (F_Ports)

The Fabric model contains two or more Fx_Ports. Each Fx_Port is attached to an Nx_Port through a link. Each Fx_Port is bi-directional and supports one or more communication models. Frames are routed to the Fx_Port attached to the destination Nx_Port.

The receiving F_Port responds to the sending Nx_Port according to the FC-2 protocol. The Fabric may verify the validity of the frame as it passes through the Fabric (See 8.7.3 and 8.9.2).

An F_Port may contain receive buffers for the incoming frames. The maximum frame size that the Fabric is able to handle for Class 2, Class 3, Class 4 and for the frame that requests a Class 1 connection is determined during Login. The frame sizes for Class 6 are the same as those for Class 1. One of the Fabric Service Parameters indicates the maximum frame size for the entire Fabric (see 15.6.2.6).

The Fabric routes the frame to the Fx_Port attached to the destination Nx_Port based on the value in the D_ID field embedded in the frame header of the frame. The routing mechanisms within the Fabric are transparent to Nx_Ports and are not specified in this standard.

--`,,```,,,,````-`-`,,`,,`,`,,`---

Copyright International Organization for Standardization
Provided by IHS under license with ISO
No reproduction or networking permitted without license from IHS Not for Resale

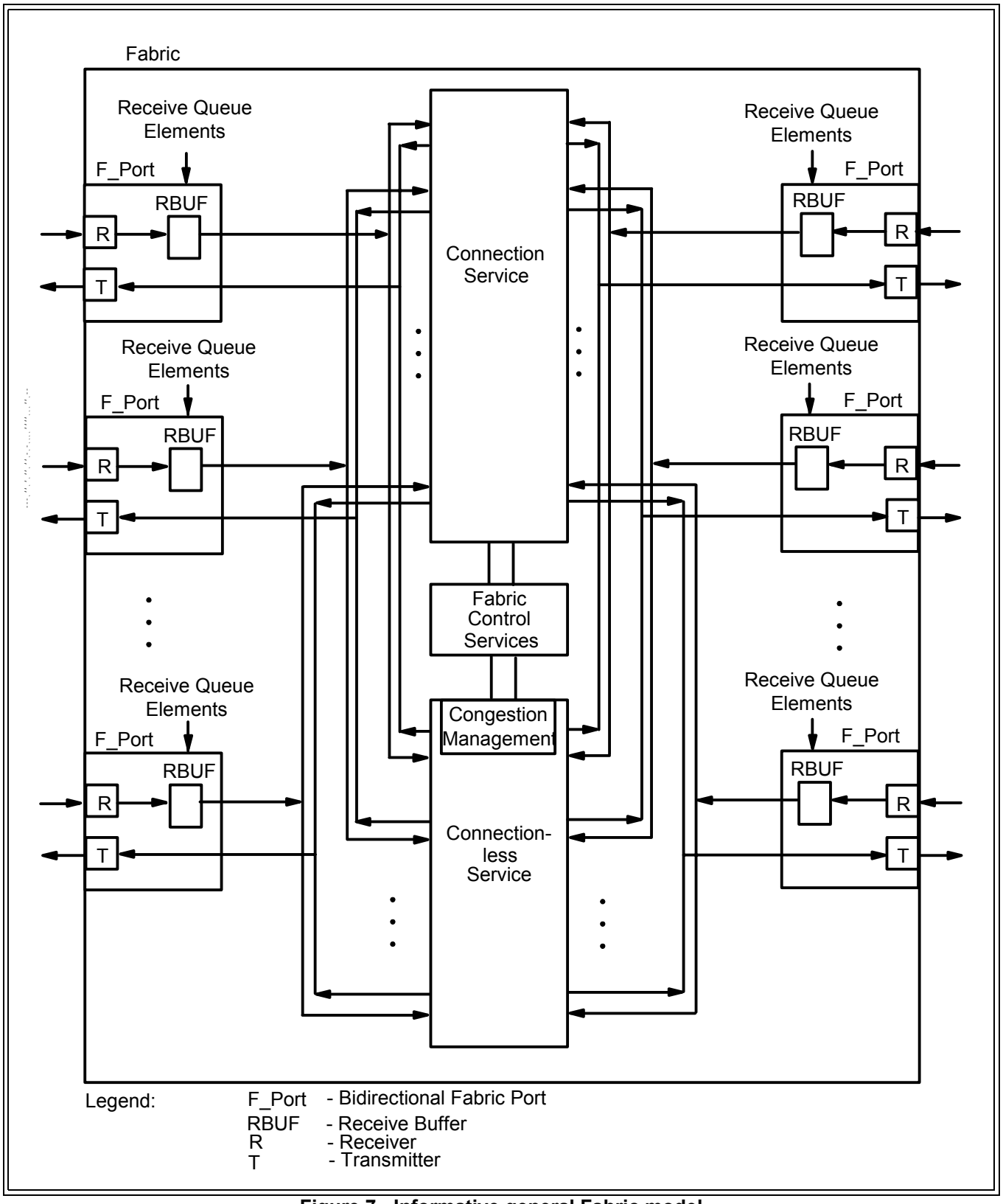


**Figure 7 - Informative general Fabric model**

Copyright International Organization for Standardization
Provided by IHS under license with ISO
No reproduction or networking permitted without license from IHS
Not for Resale

### 4.10.3 Connection Service

The Connection Service provides dedicated connections between Fx_Ports and the Nx_Ports attached to these Fx_Ports. Such dedicated connections are bi-directional and support full transmission rate (except as specified for Class 6) concurrently in both directions. A dedicated connection is retained until a removal request is received from one of the communicating Nx_Ports or an exception condition occurs that causes the Fabric to remove the Connection.

On receiving a request from an Nx_Port, the Fabric establishes a dedicated connection to the destination Nx_Port through the Connection Service. The mechanisms used by the Fabric to establish the connection are transparent to FC-2.

The Fabric is not involved in flow control. Flow control is managed end-to-end by the Nx_Ports.

If the Fabric is unable to establish a dedicated connection, it returns a busy or reject frame with a reason code. Once the dedicated connection is established, the frames between the communicating Nx_Ports are routed through the same circuit and all responses are issued by Nx_Ports.

A Class 1 or Class 6 Nx_Port and the Fabric may support stacked connect-requests. This stacked connect-requests support allows an Nx_Port to request multiple dedicated connections to multiple destinations and allows the Fabric to service them in any order. While the Nx_Port is connected to one destination, another connect-request may be processed by the Fabric to minimize the connect latency.

Unless a Class 1 or Class 6 Nx_Port and the Fabric support stacked connect-requests, when two Nx_Ports are in dedicated connection, a Class 1 connect-request from another source for one of these Nx_Ports is busied.

If Intermix is not supported and a Class 2 frame destined to one of the Nx_Ports established in a dedicated connection is received, the Class 2 frame shall be busied and the transmitting Nx_Port is notified. In the case of a Class 3 frame, the frame is discarded and no notification is sent.

If Intermix is supported and the Fabric receives a Class 2 or Class 3 frame destined to one of the Nx_Ports established in a dedicated connection, the Fabric may allow delivery with or without a delay if the delivery does not interfere with the transmission of Class 1 frames (see 13.2).

### 4.10.4 Connectionless Service

The connectionless Service multiplexes frames at frame boundaries between an Fx_Port and any other Fx_Port and between the Nx_Ports attached to them. Connectionless Service does not guarantee full link bandwidth between communicating Nx_Ports.

The Fabric notifies the transmitting Nx_Port with a reason code embedded in a Link_Response frame, if it is unable to deliver a Class 2 or Class 4 frame. In the case of a Class 3 frame, the Fabric does not notify the transmitting Nx_Port.

When frames from multiple Nx_Ports are targeted for the same destination Nx_Port in Class 2 or Class 3, congestion of frames may occur within the Fabric. Management of this congestion is part of the connectionless Service and buffer-to-buffer flow control.

For Classes 1, 2, 3 and 6, if any buffer-to-buffer flow control error occurs and as a result causes overflow (see 18.5), the Fabric logs the error and may discard the overflow frame without notification. Error logging is vendor specific.

For Class 4, if any VC_Credit flow control error occurs and as a result causes overflow (see 18.8), the Fabric logs the error and may discard the overflow frame without notification. Error logging is vendor specific.

--`,,```,,,,````-`-`,,`,,`,`,,`---

Copyright International Organization for Standardization
Provided by IHS under license with ISO
No reproduction or networking permitted without license from IHS Not for Resale

## 4.11 Fibre Channel services

Fibre Channel services (e.g., Name Server) may be provided in a Fibre Channel configuration to meet the needs of the configuration. Each of these services is addressed with an N_Port_ID for the Nx_Port providing the service or with a well-known address (see 9.4.2). These well-known addresses are recognized and routed to by the Fabric. These services may be centralized or distributed (see [6], FC-GS-4).

## 4.12 Building Blocks

### 4.12.1 Building block hierarchy

The FC-2 building blocks are used in a hierarchical fashion, as illustrated in figure 8.

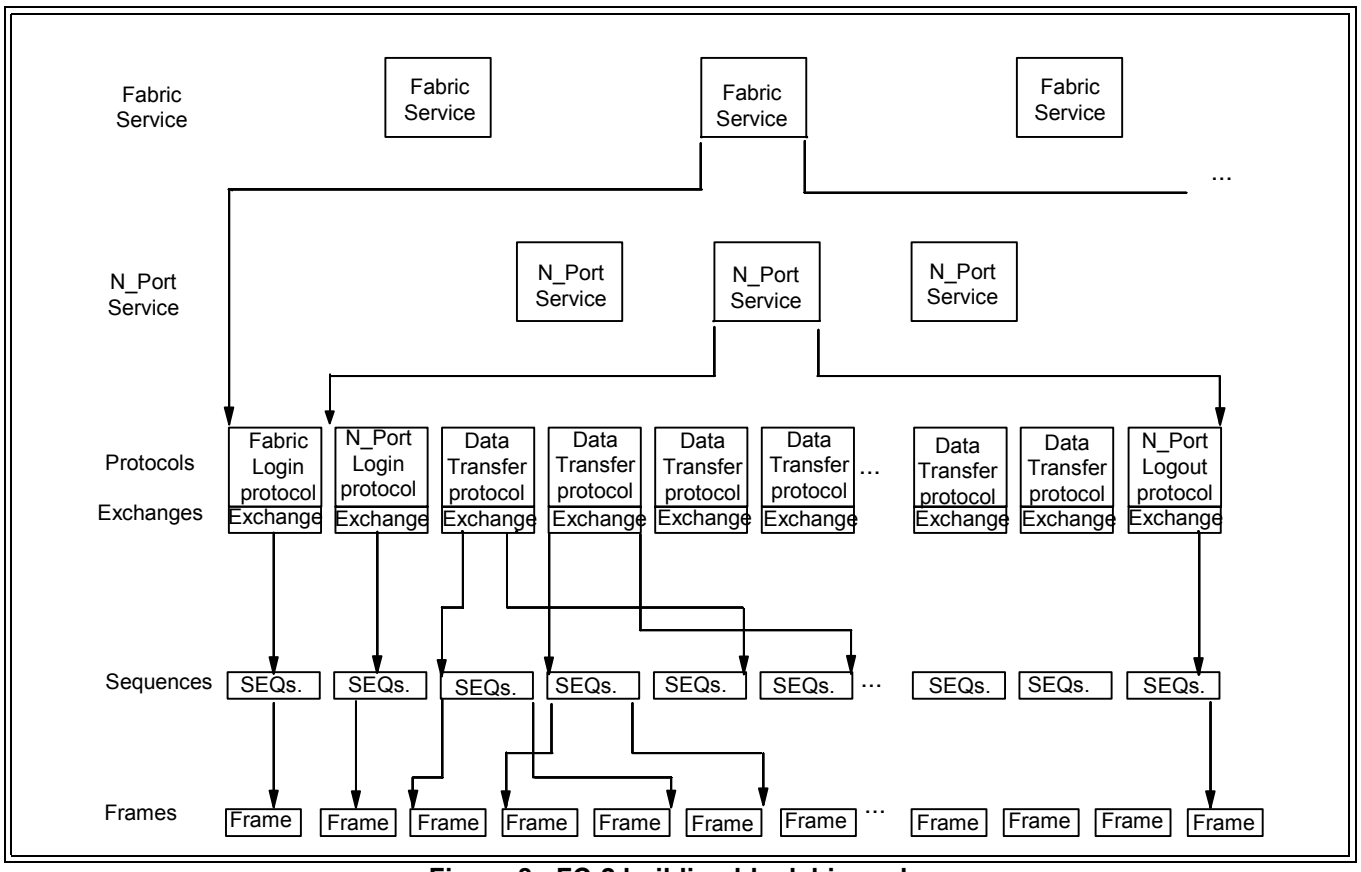


**Figure 8 - FC-2 building block hierarchy**

A Sequence is made up of one or more Data frames and if applicable, corresponding responses (see 17.6 and clause 11). An Exchange is made up of one or more Sequences flowing in a single direction from the Originator of the Exchange to the Responder or in both directions between the Originator and the Responder (see clause 17).

Prior to use by a ULP for its data transfer, the Fibre Channel has to be setup for the operating environment. The Fibre Channel operating environment is setup by performing Fabric Login and N_Port Login (see clause 15). Once these two Logins are performed, an FC-4 may start using the Fibre Channel until one or both of these Logins are invalidated.

Each Login uses an Exchange as the mechanism to accomplish the function. A data transfer is performed using an Exchange as the mechanism (see figure 8) with the related FC-4 translating the ULP protocol to FC-2 protocol.

--`,,```,,,,````-`-`,,`,,`,`,,`---
Copyright International Organization for Standardization
Provided by IHS under license with ISO
No reproduction or networking permitted without license from IHS
Not for Resale

### 4.12.2 Frame

Frames are based on a common frame format (see clause 8). Frames are categorized as Data frames and Link_Control command frames (see clause 11). Data frames (see clause 11) are classified as:

a) Link_Data frames,
b) Device_Data frames, and
c) Video_Data frames.

Link_Control command frames (see 11.2) are classified as:

a) Acknowledge (ACK) frames,
b) Link_Response (Busy and Reject) frames, and
c) Link_Control Command frames.

Selective retransmission of frames for error recovery is not supported in this standard (see clause 21). However, an individual frame may be busied in Class 2 and the sender may later retransmit the busied frame (see 11.2.3.2 and 4.12.3.3) up to the ability of the sender to retry (see 13.4). The number of times the sender may retry is not specified in this standard.

### 4.12.3 Sequence

#### 4.12.3.1 Introduction

A Sequence is a set of one or more related Data frames transmitted unidirectionally from one Nx_Port to another Nx_Port with corresponding Link_Control frames, if specified, transmitted in response. An Nx_Port that transmits a Sequence is referred to as the Sequence Initiator and the Nx_Port that receives the Sequence is referred to as the Sequence Recipient. Sequence rules are specified in 17.6.

Error recovery is performed on the Sequence boundary at the discretion of a level higher than FC-2. If a frame is not transmitted error free, and the error policy requires error recovery, the Sequence containing the frame may be retransmitted (see clause 21).

#### 4.12.3.2 Sequence_Identifier (SEQ_ID)

The Sequence Initiator assigns to the Sequence a Sequence_Identifier (SEQ_ID). The Sequence Recipient uses the same SEQ_ID in its response frames. The Sequence Initiator at each of the communicating Nx_Ports assigns SEQ_IDs independent of the other.

#### 4.12.3.3 Sequence Status Blocks

A Sequence Status Block (SSB) is a logical construct representing the format of the Sequence status information (see 17.8.2). It is used to track the progress of a Sequence at an Nx_Port on a frame by frame basis. A Sequence Initiator SSB and a Sequence Recipient SSB are used by the respective Nx_Ports to track the status of a given Sequence.

When a Sequence Initiator starts a Sequence, the Sequence Initiator allocates a SSB to be associated with the Sequence it has initiated. The Sequence Recipient subsequently allocates a SSB at its end, associated with the sequence that the Sequence Initiator has initiated. Both the Sequence Initiator and Sequence Recipient Nx_Ports track the status of the Sequence through the Sequence Initiator and the Sequence Recipient SSBs, respectively.

The maximum number of concurrent Sequences between two Nx_Ports is limited to the smaller of the number of SSBs available at these Nx_Ports. This value is established during N_Port Login through the Service Parameters (see 12.3.2.7).

Copyright International Organization for Standardization
Provided by IHS under license with ISO
No reproduction or networking permitted without license from IHS Not for Resale

### 4.12.4 Exchange

#### 4.12.4.1 Introduction

An Exchange is composed of one or more non-concurrent Sequences (see clause 17). An Exchange may be unidirectional or bi-directional. A unidirectional Exchange results when the same Nx_Port initiates all the Sequences within the Exchange. A bi-directional Exchange results when the Sequences within the Exchange are initiated by both the Nx_Ports, but not concurrently.

An FC-4 may achieve full bandwidth utilization between two Nx_Ports by supporting two or more Exchanges concurrently with the two Nx_Ports using different Exchanges to transmit information. Coordination of the Exchanges is FC-4 specific. All frames and Sequences of a given Exchange shall be performed between the two Nx_Ports that first originated and received the Exchange.

Exchanges are used by upper levels to relate sequences.

#### 4.12.4.2 Exchange_Identifiers (OX_ID and RX_ID)

Exchange_Identifiers shall be used by the Originator and Responder to uniquely identify an Exchange.

The Originator assigns each new Exchange an Originator Exchange_ID (OX_ID) unique to the Originator or Originator-Responder pair and embeds it in all frames of the Exchange.

The Responder may assign a Responder Exchange_ID (RX_ID) that is unique to the Responder or Responder-Originator pair and communicates it to the Originator before the end of the first Sequence of the Exchange in Classes 1 and 2 (see 17.5). The Responder embeds the RX_ID along with OX_ID in all subsequent frames of the Exchange.

On receiving the RX_ID from the Responder, the Originator embeds both the RX_ID and OX_ID in all subsequent frames of the Exchange it originates.

The Originator may initiate multiple concurrent Exchanges, but each shall use a unique OX_ID.

#### 4.12.4.3 Association_Header

In some system models, there is an association between an Exchange and higher-level system constructs. A specific process or group of processes in such system models is identified using the Association_Header. The format of the Association_Header is specified in 10.4.

#### 4.12.4.4 Exchange Status Blocks

An Exchange Status Block (ESB) is a logical construct representing the format of the Exchange status information (see 17.8.1). It is used to track the progress of an Exchange on a Sequence by Sequence basis. An Originator and a Responder use an Originator ESB and a Responder ESB, respectively, to track the status of an Exchange.

When an Originator initiates an Exchange, it assigns an Originator ESB associated with the Exchange (see 17.8.1).

The Responder assigns a Responder ESB to the Exchange. The Responder references the Responder ESB through the fully qualified X_ID (see 17.8.1 and [9] FCP-3).

Both the Originator and the Responder track the status of the Exchange at their respective Nx_Ports.

### 4.12.5 Exchange of service parameters

A Primitive Sequence is an Ordered Set that is transmitted repeatedly and continuously. Primitive Sequence protocols are based on Primitive Sequences and specified for Link Failure, Link Initialization, Link Reset, and

--`,,```,,,,````-`-`,,`,,`,`,,`---

Copyright International Organization for Standardization
Provided by IHS under license with ISO
No reproduction or networking permitted without license from IHS Not for Resale

Online-to-Offline transition (see 7.6).

In order to manage the Fabric operating environment, an Nx_Port interchanges its Service Parameters with the Fabric, if present, by performing Fabric Login. This may be done explicitly or implicitly (see 15.1).

Before performing data transfer, the Nx_Port exchanges its Service Parameters with another Nx_Port by performing an implicit or explicit N_Port Login (see 15.1). An Nx_Port may request removal of its Service Parameters from the other Nx_Port by performing an N_Port Logout protocol (see 15.5). This request may be used to free up resources at the other Nx_Port.

The upper level data is transferred using Data transfer protocols.

## 4.13 Segmentation and reassembly

### 4.13.1 General

Segmentation and reassembly (see clause 19) are the FC-2 functions provided to subdivide Information Units to be transferred into Payloads, embed each Payload in an individual frame, transfer these frames over the link and reassemble the Information Units at the receiving end as sent by the sending end.

SEQ_CNT shall be used to perform the segmentation and reassembly.

### 4.13.2 Application data mapping

Mapping application data to FC-4 Information Units and other transfomations within the ULP layers are outside the scope of this standard.

### 4.13.3 Relative offset

Relative offset is an FC-2 construct used to indicate the displacement of the first data byte of each frame's Payload with reference to an upper level defined origin for a data block corresponding to an Information Category at the sending end.

If relative offset is not supported (see clauses 15 and 19), then SEQ_CNT shall be used to perform the segmentation and reassembly.

### 4.13.4 Sending end mapping

Upper levels at the sending end specify to FC-2

a) data blocks to be transferred within a Sequence,
b) the Information Category for each data block (see 9.3.3),
c) relative offset for each Information Category (see 9.3.3) if required, and
d) an initial relative offset for each data block to be transferred (see 9.13) if required.

The relative offset relationship between the data blocks to be transferred in multiple Sequences is defined by an upper level and is transparent to FC-2.

### 4.13.5 Capability

The Sequence Recipient indicates during N_Port Login its capability to support continuously increasing (see 15.6.2.4.1) or random relative offset (see 15.6.2.4.3). If only the former is supported, each Information Category transferred within a Sequence shall be treated as a data block by upper levels. If random relative offset is supported, an Information Category may be specified as data blocks by upper levels and portions of the data blocks may be transmitted in a random order.

Copyright International Organization for Standardization
Provided by IHS under license with ISO
No reproduction or networking permitted without license from IHS Not for Resale

### 4.13.6 FC-2 mapping

If Continuously Increasing Relative Offset for a Sequence is supported, a data block shall not be divided into portions. With continuously increasing relative offset, the FC-2 maps each data block as a single Information Category within the relative offset space specified. The FC-2 implementation may support mapping one or more Information Categories into a single Sequence as specified. If multiple information categories per sequence is not supported, each information category is transmitted as a separate Sequence.

If Random Relative Offset for a Sequence is supported, a data block may be divided into portions and the upper level specifies the initial relative offset of each portion; the initial relative offsets of successive data blocks are allowed to vary as required by the upper level. With random relative offset, the FC-2 maps portions of a data block corresponding to an Information Category into a single Sequence within the relative offset space as specified.

### 4.13.7 Segmentation

Segmentation is the process by which the FC-2 subdivides a data block into frames with Payloads of equal or varied sizes and transmits them over the link. During segmentation, the FC-2 determines the size of the Payload for each frame in the Sequence. It embeds the data in the Payload of the frame along with the relative offset of the Payload.

Relative offset for the first frame of the data block equals the initial relative offset value specified to the FC-2. The initial relative offset specified may be zero or non-zero. Relative offset for each succeeding frame of the data block is computed as the sum of relative offset and the Payload length of the current frame.

### 4.13.8 Reassembly

Reassembly is the FC-2 process that reassembles each data block by placing the Payload from each frame at the relative offset specified in the frame or by using the SEQ_CNT if relative offset is not supported (see clause 19). Reassembly is performed on an Information Category basis.

## 4.14 Error detection and recovery

In general, detected errors fall into two broad categories: frame errors and link-level errors.

Frame errors result from missing frames or corrupted frames. Corrupted frames are discarded and for corrupted frames the resulting error is detected at the Sequence level. At the Sequence level, a missing frame is detected or the Sequence times out due to one or more missing Data frames or Acknowledgments. If the discard policy (see 21.6.3) is used, the Sequence is aborted at the Sequence level once an error is detected. Sequence errors may also cause Exchange errors that may also cause the Exchange to be aborted. Error recovery may be performed on the failing Sequence or Exchange with the involvement of the sending upper level. Other properly performing Sequences are unaffected.

Link-level errors result from errors detected at a lower level of granularity than frames, where the basic signal characteristics are in question. Link-level errors include such errors as Loss-of-Signal, Loss-of-Synchronization and several link timeout errors that indicate no frame activity. Link-level errors may be isolated to a portion of the link. Transmission and reception of Primitive Sequences accomplish recovery from link-level errors. Recovery at the link-level disturbs normal frame flow and may introduce Sequence errors that may be resolved after recovery at the link-level.

See clause 21 for detailed error detection and recovery requirements.

--`,,```,,,,````-`-`,,`,,`,`,,`---
Copyright International Organization for Standardization
Provided by IHS under license with ISO
No reproduction or networking permitted without license from IHS Not for Resale

# 5 FC-1 8B/10B transmission code

## 5.1 Introduction

Information to be transmitted over a Fibre shall be encoded eight bits at a time into an 10-bit Transmission Character and then sent serially bit-by-bit across the link. Information received over the link shall be collected ten bits at a time, and those Transmission Characters that are used for data, called data characters, shall be decoded into the correct eight-bit codes. The 10-bit transmission code supports all 256 eight-bit combinations. Some of the remaining Transmission Characters, referred to as special characters, are used for functions that are to be distinguishable from the contents of a frame.

The primary rationale for use of a transmission code is to improve the Transmission Characteristics of information to be transferred across a Fibre. The encodings defined by the transmission code ensure that sufficient transitions are present in the serial bit stream to make clock recovery possible at the receiver. Such encoding also greatly increases the likelihood of detecting any single or multiple bit errors that may occur during transmission and reception of information. In addition, some of the special characters of the transmission code contain a distinct and easily recognizable bit pattern (a comma) that assists a receiver in achieving word alignment on the incoming bit stream.

## 5.2 Notation conventions

FC-1 uses letter notation for describing information bits and control variables. Such notation differs from the bit notation specified by the remainder of this standard (see 3.2). The following text describes the translation process between these notations and provides a translation example. It also describes the conventions used to name valid Transmission Characters. This text is provided for the purposes of terminology clarification only and is not intended to restrict the implementation of FC-1 functions in any way.

An unencoded FC-1 information byte is composed of eight information bits A,B,C,D,E,F,G,H and the control variable Z. This information is encoded by FC-1 into the bits a,b,c,d,e,i,f,g,h,j of a 10-bit Transmission Character.

An information bit contains either a binary zero or a binary one. A control variable has either the value D or the value K. An encoded bit contains either a binary zero or a binary one. When the control variable associated with an unencoded FC-1 information byte contains the value D, that byte is referred to as a valid data byte. When the control variable associated with an unencoded FC-1 information byte contains the value K, that byte is referred to as a special code.

The unencoded information bit labeled A corresponds to bit 0 in the bit numbering scheme of the FC-2 specification, B corresponds to bit 1, and so on, as shown in table 4. The control variable is typically not specified by FC-2. When the control variable is not specified by FC-2, FC-1 assumes its value to be D (data).

**Table 4 - Bit designations**

| FC-2 bit notation: | 7 | 6 | 5 | 4 | 3 | 2 | 1 | 0 | Control Variable |
|---|---|---|---|---|---|---|---|---|---|
| FC-1 unencoded bit notation: | H | G | F | E | D | C | B | A | Z |

Each valid Transmission Character has been given a name using the following convention: Zxx.y

Where:

a) Z is the control variable of the unencoded FC-1 information byte. The value of Z is used to indicate whether the Transmission Character is a data character (Z = D) or a special character (Z = K);
b) xx is the decimal value of the binary number composed of the bits E, D, C, B, and A of the unencoded FC-1 information byte in that order; and
c) y is the decimal value of the binary number composed of the bits H, G, and F of the unencoded FC-1 information byte in that order.

--`,,```,,,,````-`-`,,`,,`,`,,`---

Copyright International Organization for Standardization
Provided by IHS under license with ISO
No reproduction or networking permitted without license from IHS Not for Resale

Table 5 shows an example of the conversion from FC-2 byte notation to the FC-1 Transmission Character naming convention described above.

**Table 5 - Conversion Example**

| | |
|---|---|
| FC-2 byte notification: | hex 'BC' –- Special Code |
| FC-2 bit notation: | 7654 3210 Control<br>1011 1100 K |
| FC-1 unencoded bit notation: | HGF EDCBA Z<br>101 11100 K |
| FC-1 unencoded bit notation reordered to conform with Zxx.y naming convention: | Z EDCBA HGF<br>K 11100 101 |
| FC-1 Transmission Character name: | K 28 .5 |

Most Kxx.y combinations do not result in valid Transmission Characters within the 8B/10B transmission code. Only those combinations that result in special characters as specified by table 7, are considered valid.

## 5.3 Character encoding and decoding

### 5.3.1 Introduction

The following information describes how the tables shall be used for both generating valid Transmission Characters (encoding) and checking the validity of received Transmission Characters (decoding). It also specifies the ordering rules to be followed when transmitting the bits within a character and the characters within the higher-level constructs specified by the document (i.e., Ordered Sets and frames).

### 5.3.2 Transmission order

Within the definition of the 8B/10B transmission code, the bit positions of the 10 bit Transmission Characters are labeled a,b,c,d,e,i,f,g,h, and j. Bit "a" shall be transmitted first, followed by bits "b," "c," "d," "e," "i," "f," "g," "h," and "j," in that order. Bit "i" shall be transmitted between bit "e" and bit "f," rather than in the order that would be indicated by the letters of the alphabet.

Characters within Ordered Sets shall be transmitted sequentially beginning with the special character used to distinguish the Ordered Set (e.g., K28.5) and proceeding character by character from left to right within the definition of the Ordered Set until all characters of the Ordered Set are transmitted.

The contents of a frame shall be transmitted sequentially beginning with the Ordered Set used to denote the start of frame (SOF delimiter) and proceeding character by character from left to right within the definition of the frame until the Ordered Set used to denote the end of frame (EOF delimiter) is transmitted.

### 5.3.3 Valid and invalid Transmission Characters

#### 5.3.3.1 Definitions

Tables 6 and 7 define the valid data characters and valid special characters (K characters), respectively. These tables shall be used for both generating valid Transmission Characters (encoding) and checking the validity of received Transmission Characters (decoding). In the tables, each Valid-Data-Byte or special code entry has two columns that represent two (not necessarily different) Transmission Characters. The two columns correspond to the current value of the running disparity ("Current RD -" or "Current RD +"). Running disparity is a binary parameter with either the value negative (-) or the value positive (+). The running disparity at the beginning of an Ordered Set is the beginning running disparity (beginning RD).

Copyright International Organization for Standardization
Provided by IHS under license with ISO
No reproduction or networking permitted without license from IHS Not for Resale

After powering on, the transmitter shall initialize the Current RD to negative. Upon transmission of any Transmission Character, the transmitter shall calculate a new value for its running disparity based on the contents of the transmitted character and the Running Disparity at the beginning of the Transmission Character.

After powering on or exiting diagnostic mode (the definition of diagnostic mode is beyond the scope of this standard), the receiver should assume either the positive or negative value for its initial running disparity. Upon reception of any Transmission Character, the receiver shall determine whether the Transmission Character is valid or invalid (see table 5.3.3 and table 6) and shall calculate a new value for its running disparity based on the contents of the received character and the Running Disparity at the beginning of the received Transmission Character.

The following rules for running disparity shall be used to calculate the new running disparity value for Transmission Characters that have been transmitted (i.e., transmitter's running disparity) and that have been received (i.e., receiver's running disparity).

Running disparity for a Transmission Character shall be calculated on the basis of sub-blocks, where the first six bits (’abcdei’ b) form one sub-block (six-bit sub-block) and the second four bits (’fghj’ b) form the other sub-block (four-bit sub-block). Running disparity at the beginning of the six-bit sub-block is the running disparity at the end of the last Transmission Character. Running disparity at the beginning of the four-bit sub-block is the running disparity at the end of the six-bit sub-block. Running disparity at the end of the Transmission Character is the running disparity at the end of the four-bit sub-block.

Running disparity for the sub-blocks shall be calculated as follows:

a) Running disparity at the end of any sub-block is positive
   1) if the sub-block contains more ones than zeros,
   2) if at the end of the six-bit sub-block, the six-bit sub-block is ’000111’ b, or
   3) if at the end of the four-bit sub-block, the four-bit sub-block is ’0011’ b.

d) Running disparity at the end of any sub-block is negative
   1) if the sub-block contains more zeros than ones,
   2) if at the end of the six-bit sub-block, the six-bit sub-block is ’111000’ b, or
   3) if at the end of the four-bit sub-block, the four-bit sub-block is ’1100’ b.

d) Otherwise, running disparity at the end of the sub-block is the same as at the beginning of the sub-block.

All sub-blocks with equal numbers of zeros and ones are disparity neutral. In order to limit the run length of zeros or ones between sub-blocks, the 8B/10B transmission code rules specify that sub-blocks encoded as ’000111’ b or ’0011’ b are generated only when the running disparity at the beginning of the sub-block is positive; thus, running disparity at the end of these sub-blocks shall also be positive. Likewise, sub-blocks containing ’111000’ b or ’1100’ b are generated only when the running disparity at the beginning of the sub-block is negative; thus, running disparity at the end of these sub-blocks shall also be negative.

Copyright International Organization for Standardization
Provided by IHS under license with ISO
No reproduction or networking permitted without license from IHS Not for Resale

**Table 6 - Valid Data Characters**

| Data Byte Name | Bits HGF EDCBA (binary) | Current RD - abcdei fghj (binary) | Current RD+ abcdei fghj (binary) | Data Byte Name | Bits HGF EDCBA (binary) | Current RD - abcdei fghj (binary) | Current RD+ abcdei fghj (binary) |
|---|---|---|---|---|---|---|---|
| D00.0 | 000 00000 | 100111 0100 | 011000 1011 | D00.1 | 001 00000 | 100111 1001 | 011000 1001 |
| D01.0 | 000 00001 | 011101 0100 | 100010 1011 | D01.1 | 001 00001 | 011101 1001 | 100010 1001 |
| D02.0 | 000 00010 | 101101 0100 | 010010 1011 | D02.1 | 001 00010 | 101101 1001 | 010010 1001 |
| D03.0 | 000 00011 | 110001 1011 | 110001 0100 | D03.1 | 001 00011 | 110001 1001 | 110001 1001 |
| D04.0 | 000 00100 | 110101 0100 | 001010 1011 | D04.1 | 001 00100 | 110101 1001 | 001010 1001 |
| D05.0 | 000 00101 | 101001 1011 | 101001 0100 | D05.1 | 001 00101 | 101001 1001 | 101001 1001 |
| D06.0 | 000 00110 | 011001 1011 | 011001 0100 | D06.1 | 001 00110 | 011001 1001 | 011001 1001 |
| D07.0 | 000 00111 | 111000 1011 | 000111 0100 | D07.1 | 001 00111 | 111000 1001 | 000111 1001 |
| D08.0 | 000 01000 | 111001 0100 | 000110 1011 | D08.1 | 001 01000 | 111001 1001 | 000110 1001 |
| D09.0 | 000 01001 | 100101 1011 | 100101 0100 | D09.1 | 001 01001 | 100101 1001 | 100101 1001 |
| D10.0 | 000 01010 | 010101 1011 | 010101 0100 | D10.1 | 001 01010 | 010101 1001 | 010101 1001 |
| D11.0 | 000 01011 | 110100 1011 | 110100 0100 | D11.1 | 001 01011 | 110100 1001 | 110100 1001 |
| D12.0 | 000 01100 | 001101 1011 | 001101 0100 | D12.1 | 001 01100 | 001101 1001 | 001101 1001 |
| D13.0 | 000 01101 | 101100 1011 | 101100 0100 | D13.1 | 001 01101 | 101100 1001 | 101100 1001 |
| D14.0 | 000 01110 | 011100 1011 | 011100 0100 | D14.1 | 001 01110 | 011100 1001 | 011100 1001 |
| D15.0 | 000 01111 | 010111 0100 | 101000 1011 | D15.1 | 001 01111 | 010111 1001 | 101000 1001 |
| D16.0 | 000 10000 | 011011 0100 | 100100 1011 | D16.1 | 001 10000 | 011011 1001 | 100100 1001 |
| D17.0 | 000 10001 | 100011 1011 | 100011 0100 | D17.1 | 001 10001 | 100011 1001 | 100011 1001 |
| D18.0 | 000 10010 | 010011 1011 | 010011 0100 | D18.1 | 001 10010 | 010011 1001 | 010011 1001 |
| D19.0 | 000 10011 | 110010 1011 | 110010 0100 | D19.1 | 001 10011 | 110010 1001 | 110010 1001 |
| D20.0 | 000 10100 | 001011 1011 | 001011 0100 | D20.1 | 001 10100 | 001011 1001 | 001011 1001 |
| D21.0 | 000 10101 | 101010 1011 | 101010 0100 | D21.1 | 001 10101 | 101010 1001 | 101010 1001 |
| D22.0 | 000 10110 | 011010 1011 | 011010 0100 | D22.1 | 001 10110 | 011010 1001 | 011010 1001 |
| D23.0 | 000 10111 | 111010 0100 | 000101 1011 | D23.1 | 001 10111 | 111010 1001 | 000101 1001 |
| D24.0 | 000 11000 | 110011 0100 | 001100 1011 | D24.1 | 001 11000 | 110011 1001 | 001100 1001 |
| D25.0 | 000 11001 | 100110 1011 | 100110 0100 | D25.1 | 001 11001 | 100110 1001 | 100110 1001 |
| D26.0 | 000 11010 | 010110 1011 | 010110 0100 | D26.1 | 001 11010 | 010110 1001 | 010110 1001 |
| D27.0 | 000 11011 | 110110 0100 | 001001 1011 | D27.1 | 001 11011 | 110110 1001 | 001001 1001 |
| D28.0 | 000 11100 | 001110 1011 | 001110 0100 | D28.1 | 001 11100 | 001110 1001 | 001110 1001 |
| D29.0 | 000 11101 | 101110 0100 | 010001 1011 | D29.1 | 001 11101 | 101110 1001 | 010001 1001 |
| D30.0 | 000 11110 | 011110 0100 | 100001 1011 | D30.1 | 001 11110 | 011110 1001 | 100001 1001 |
| D31.0 | 000 11111 | 101011 0100 | 010100 1011 | D31.1 | 001 11111 | 101011 1001 | 010100 1001 |
| D00.2 | 010 00000 | 100111 0101 | 011000 0101 | D00.3 | 011 00000 | 100111 0011 | 011000 1100 |
| D01.2 | 010 00001 | 011101 0101 | 100010 0101 | D01.3 | 011 00001 | 011101 0011 | 100010 1100 |

--`,,```,,,,````-`-`,,`,,`,`,,`---

Copyright International Organization for Standardization
Provided by IHS under license with ISO
No reproduction or networking permitted without license from IHS

Not for Resale

**Table 6 - Valid Data Characters (Continued)**

| Data Byte Name | Bits HGF EDCBA (binary) | Current RD - abcdei fghj (binary) | Current RD+ abcdei fghj (binary) | Data Byte Name | Bits HGF EDCBA (binary) | Current RD - abcdei fghj (binary) | Current RD+ abcdei fghj (binary) |
|---|---|---|---|---|---|---|---|
| D02.2 | 010 00010 | 101101 0101 | 010010 0101 | D02.3 | 011 00010 | 101101 0011 | 010010 1100 |
| D03.2 | 010 00011 | 110001 0101 | 110001 0101 | D03.3 | 011 00011 | 110001 1100 | 110001 0011 |
| D04.2 | 010 00100 | 110101 0101 | 001010 0101 | D04.3 | 011 00100 | 110101 0011 | 001010 1100 |
| D05.2 | 010 00101 | 101001 0101 | 101001 0101 | D05.3 | 011 00101 | 101001 1100 | 101001 0011 |
| D06.2 | 010 00110 | 011001 0101 | 011001 0101 | D06.3 | 011 00110 | 011001 1100 | 011001 0011 |
| D07.2 | 010 00111 | 111000 0101 | 000111 0101 | D07.3 | 011 00111 | 111000 1100 | 000111 0011 |
| D08.2 | 010 01000 | 111001 0101 | 000110 0101 | D08.3 | 011 01000 | 111001 0011 | 000110 1100 |
| D09.2 | 010 01001 | 100101 0101 | 100101 0101 | D09.3 | 011 01001 | 100101 1100 | 100101 0011 |
| D10.2 | 010 01010 | 010101 0101 | 010101 0101 | D10.3 | 011 01010 | 010101 1100 | 010101 0011 |
| D11.2 | 010 01011 | 110100 0101 | 110100 0101 | D11.3 | 011 01011 | 110100 1100 | 110100 0011 |
| D12.2 | 010 01100 | 001101 0101 | 001101 0101 | D12.3 | 011 01100 | 001101 1100 | 001101 0011 |
| D13.2 | 010 01101 | 101100 0101 | 101100 0101 | D13.3 | 011 01101 | 101100 1100 | 101100 0011 |
| D14.2 | 010 01110 | 011100 0101 | 011100 0101 | D14.3 | 011 01110 | 011100 1100 | 011100 0011 |
| D15.2 | 010 01111 | 010111 0101 | 101000 0101 | D15.3 | 011 01111 | 010111 0011 | 101000 1100 |
| D16.2 | 010 10000 | 011011 0101 | 100100 0101 | D16.3 | 011 10000 | 011011 0011 | 100100 1100 |
| D17.2 | 010 10001 | 100011 0101 | 100011 0101 | D17.3 | 011 10001 | 100011 1100 | 100011 0011 |
| D18.2 | 010 10010 | 010011 0101 | 010011 0101 | D18.3 | 011 10010 | 010011 1100 | 010011 0011 |
| D19.2 | 010 10011 | 110010 0101 | 110010 0101 | D19.3 | 011 10011 | 110010 1100 | 110010 0011 |
| D20.2 | 010 10100 | 001011 0101 | 001011 0101 | D20.3 | 011 10100 | 001011 1100 | 001011 0011 |
| D21.2 | 010 10101 | 101010 0101 | 101010 0101 | D21.3 | 011 10101 | 101010 1100 | 101010 0011 |
| D22.2 | 010 10110 | 011010 0101 | 011010 0101 | D22.3 | 011 10110 | 011010 1100 | 011010 0011 |
| D23.2 | 010 10111 | 111010 0101 | 000101 0101 | D23.3 | 011 10111 | 111010 0011 | 000101 1100 |
| D24.2 | 010 11000 | 110011 0101 | 001100 0101 | D24.3 | 011 11000 | 110011 0011 | 001100 1100 |
| D25.2 | 010 11001 | 100110 0101 | 100110 0101 | D25.3 | 011 11001 | 100110 1100 | 100110 0011 |
| D26.2 | 010 11010 | 010110 0101 | 010110 0101 | D26.3 | 011 11010 | 010110 1100 | 010110 0011 |
| D27.2 | 010 11011 | 110110 0101 | 001001 0101 | D27.3 | 011 11011 | 110110 0011 | 001001 1100 |
| D28.2 | 010 11100 | 001110 0101 | 001110 0101 | D28.3 | 011 11100 | 001110 1100 | 001110 0011 |
| D29.2 | 010 11101 | 101110 0101 | 010001 0101 | D29.3 | 011 11101 | 101110 0011 | 010001 1100 |
| D30.2 | 010 11110 | 011110 0101 | 100001 0101 | D30.3 | 011 11110 | 011110 0011 | 100001 1100 |
| D31.2 | 010 11111 | 101011 0101 | 010100 0101 | D31.3 | 011 11111 | 101011 0011 | 010100 1100 |
| D00.4 | 100 00000 | 100111 0010 | 011000 1101 | D00.5 | 101 00000 | 100111 1010 | 011000 1010 |
| D01.4 | 100 00001 | 011101 0010 | 100010 1101 | D01.5 | 101 00001 | 011101 1010 | 100010 1010 |
| D02.4 | 100 00010 | 101101 0010 | 010010 1101 | D02.5 | 101 00010 | 101101 1010 | 010010 1010 |
| D03.4 | 100 00011 | 110001 1101 | 110001 0010 | D03.5 | 101 00011 | 110001 1010 | 110001 1010 |

Copyright International Organization for Standardization
Provided by IHS under license with ISO
No reproduction or networking permitted without license from IHS Not for Resale

**Table 6 - Valid Data Characters (Continued)**

| Data Byte Name | Bits HGF EDCBA (binary) | Current RD - abcdei fghj (binary) | Current RD+ abcdei fghj (binary) | Data Byte Name | Bits HGF EDCBA (binary) | Current RD - abcdei fghj (binary) | Current RD+ abcdei fghj (binary) |
|---|---|---|---|---|---|---|---|
| D04.4 | 100 00100 | 110101 0010 | 001010 1101 | D04.5 | 101 00100 | 110101 1010 | 001010 1010 |
| D05.4 | 100 00101 | 101001 1101 | 101001 0010 | D05.5 | 101 00101 | 101001 1010 | 101001 1010 |
| D06.4 | 100 00110 | 011001 1101 | 011001 0010 | D06.5 | 101 00110 | 011001 1010 | 011001 1010 |
| D07.4 | 100 00111 | 111000 1101 | 000111 0010 | D07.5 | 101 00111 | 111000 1010 | 000111 1010 |
| D08.4 | 100 01000 | 111001 0010 | 000110 1101 | D08.5 | 101 01000 | 111001 1010 | 000110 1010 |
| D09.4 | 100 01001 | 100101 1101 | 100101 0010 | D09.5 | 101 01001 | 100101 1010 | 100101 1010 |
| D10.4 | 100 01010 | 010101 1101 | 010101 0010 | D10.5 | 101 01010 | 010101 1010 | 010101 1010 |
| D11.4 | 100 01011 | 110100 1101 | 110100 0010 | D11.5 | 101 01011 | 110100 1010 | 110100 1010 |
| D12.4 | 100 01100 | 001101 1101 | 001101 0010 | D12.5 | 101 01100 | 001101 1010 | 001101 1010 |
| D13.4 | 100 01101 | 101100 1101 | 101100 0010 | D13.5 | 101 01101 | 101100 1010 | 101100 1010 |
| D14.4 | 100 01110 | 011100 1101 | 011100 0010 | D14.5 | 101 01110 | 011100 1010 | 011100 1010 |
| D15.4 | 100 01111 | 010111 0010 | 101000 1101 | D15.5 | 101 01111 | 010111 1010 | 101000 1010 |
| D16.4 | 100 10000 | 011011 0010 | 100100 1101 | D16.5 | 101 10000 | 011011 1010 | 100100 1010 |
| D17.4 | 100 10001 | 100011 1101 | 100011 0010 | D17.5 | 101 10001 | 100011 1010 | 100011 1010 |
| D18.4 | 100 10010 | 010011 1101 | 010011 0010 | D18.5 | 101 10010 | 010011 1010 | 010011 1010 |
| D19.4 | 100 10011 | 110010 1101 | 110010 0010 | D19.5 | 101 10011 | 110010 1010 | 110010 1010 |
| D20.4 | 100 10100 | 001011 1101 | 001011 0010 | D20.5 | 101 10100 | 001011 1010 | 001011 1010 |
| D21.4 | 100 10101 | 101010 1101 | 101010 0010 | D21.5 | 101 10101 | 101010 1010 | 101010 1010 |
| D22.4 | 100 10110 | 011010 1101 | 011010 0010 | D22.5 | 101 10110 | 011010 1010 | 011010 1010 |
| D23.4 | 100 10111 | 111010 0010 | 000101 1101 | D23.5 | 101 10111 | 111010 1010 | 000101 1010 |
| D24.4 | 100 11000 | 110011 0010 | 001100 1101 | D24.5 | 101 11000 | 110011 1010 | 001100 1010 |
| D25.4 | 100 11001 | 100110 1101 | 100110 0010 | D25.5 | 101 11001 | 100110 1010 | 100110 1010 |
| D26.4 | 100 11010 | 010110 1101 | 010110 0010 | D26.5 | 101 11010 | 010110 1010 | 010110 1010 |
| D27.4 | 100 11011 | 110110 0010 | 001001 1101 | D27.5 | 101 11011 | 110110 1010 | 001001 1010 |
| D28.4 | 100 11100 | 001110 1101 | 001110 0010 | D28.5 | 101 11100 | 001110 1010 | 001110 1010 |
| D29.4 | 100 11101 | 101110 0010 | 010001 1101 | D29.5 | 101 11101 | 101110 1010 | 010001 1010 |
| D30.4 | 100 11110 | 011110 0010 | 100001 1101 | D30.5 | 101 11110 | 011110 1010 | 100001 1010 |
| D31.4 | 100 11111 | 101011 0010 | 010100 1101 | D31.5 | 101 11111 | 101011 1010 | 010100 1010 |
| D00.6 | 110 00000 | 100111 0110 | 011000 0110 | D00.7 | 111 00000 | 100111 0001 | 011000 1110 |
| D01.6 | 110 00001 | 011101 0110 | 100010 0110 | D01.7 | 111 00001 | 011101 0001 | 100010 1110 |
| D02.6 | 110 00010 | 101101 0110 | 010010 0110 | D02.7 | 111 00010 | 101101 0001 | 010010 1110 |
| D03.6 | 110 00011 | 110001 0110 | 110001 0110 | D03.7 | 111 00011 | 110001 1110 | 110001 0001 |
| D04.6 | 110 00100 | 110101 0110 | 001010 0110 | D04.7 | 111 00100 | 110101 0001 | 001010 1110 |
| D05.6 | 110 00101 | 101001 0110 | 101001 0110 | D05.7 | 111 00101 | 101001 1110 | 101001 0001 |

Copyright International Organization for Standardization
Provided by IHS under license with ISO
No reproduction or networking permitted without license from IHS Not for Resale

**Table 6 - Valid Data Characters (Continued)**

| Data Byte Name | Bits HGF EDCBA (binary) | Current RD - abcdei fghj (binary) | Current RD+ abcdei fghj (binary) | Data Byte Name | Bits HGF EDCBA (binary) | Current RD - abcdei fghj (binary) | Current RD+ abcdei fghj (binary) |
|---|---|---|---|---|---|---|---|
| D06.6 | 110 00110 | 011001 0110 | 011001 0110 | D06.7 | 111 00110 | 011001 1110 | 011001 0001 |
| D07.6 | 110 00111 | 111000 0110 | 000111 0110 | D07.7 | 111 00111 | 111000 1110 | 000111 0001 |
| D08.6 | 110 01000 | 111001 0110 | 000110 0110 | D08.7 | 111 01000 | 111001 0001 | 000110 1110 |
| D09.6 | 110 01001 | 100101 0110 | 100101 0110 | D09.7 | 111 01001 | 100101 1110 | 100101 0001 |
| D10.6 | 110 01010 | 010101 0110 | 010101 0110 | D10.7 | 111 01010 | 010101 1110 | 010101 0001 |
| D11.6 | 110 01011 | 110100 0110 | 110100 0110 | D11.7 | 111 01011 | 110100 1110 | 110100 1000 |
| D12.6 | 110 01100 | 001101 0110 | 001101 0110 | D12.7 | 111 01100 | 001101 1110 | 001101 0001 |
| D13.6 | 110 01101 | 101100 0110 | 101100 0110 | D13.7 | 111 01101 | 101100 1110 | 101100 1000 |
| D14.6 | 110 01110 | 011100 0110 | 011100 0110 | D14.7 | 111 01110 | 011100 1110 | 011100 1000 |
| D15.6 | 110 01111 | 010111 0110 | 101000 0110 | D15.7 | 111 01111 | 010111 0001 | 101000 1110 |
| D16.6 | 110 10000 | 011011 0110 | 100100 0110 | D16.7 | 111 10000 | 011011 0001 | 100100 1110 |
| D17.6 | 110 10001 | 100011 0110 | 100011 0110 | D17.7 | 111 10001 | 100011 0111 | 100011 0001 |
| D18.6 | 110 10010 | 010011 0110 | 010011 0110 | D18.7 | 111 10010 | 010011 0111 | 010011 0001 |
| D19.6 | 110 10011 | 110010 0110 | 110010 0110 | D19.7 | 111 10011 | 110010 1110 | 110010 0001 |
| D20.6 | 110 10100 | 001011 0110 | 001011 0110 | D20.7 | 111 10100 | 001011 0111 | 001011 0001 |
| D21.6 | 110 10101 | 101010 0110 | 101010 0110 | D21.7 | 111 10101 | 101010 1110 | 101010 0001 |
| D22.6 | 110 10110 | 011010 0110 | 011010 0110 | D22.7 | 111 10110 | 011010 1110 | 011010 0001 |
| D23.6 | 110 10111 | 111010 0110 | 000101 0110 | D23.7 | 111 10111 | 111010 0001 | 000101 1110 |
| D24.6 | 110 11000 | 110011 0110 | 001100 0110 | D24.7 | 111 11000 | 110011 0001 | 001100 1110 |
| D25.6 | 110 11001 | 100110 0110 | 100110 0110 | D25.7 | 111 11001 | 100110 1110 | 100110 0001 |
| D26.6 | 110 11010 | 010110 0110 | 010110 0110 | D26.7 | 111 11010 | 010110 1110 | 010110 0001 |
| D27.6 | 110 11011 | 110110 0110 | 001001 0110 | D27.7 | 111 11011 | 110110 0001 | 001001 1110 |
| D28.6 | 110 11100 | 001110 0110 | 001110 0110 | D28.7 | 111 11100 | 001110 1110 | 001110 0001 |
| D29.6 | 110 11101 | 101110 0110 | 010001 0110 | D29.7 | 111 11101 | 101110 0001 | 010001 1110 |
| D30.6 | 110 11110 | 011110 0110 | 100001 0110 | D30.7 | 111 11110 | 011110 0001 | 100001 1110 |
| D31.6 | 110 11111 | 101011 0110 | 010100 0110 | D31.7 | 111 11111 | 101011 0001 | 010100 1110 |

Copyright International Organization for Standardization
Provided by IHS under license with ISO
No reproduction or networking permitted without license from IHS
Not for Resale

**Table 7 - Valid Special Characters**

| Special Code Name | Current RD - abcdei fghj | Current RD + abcdei fghj |
|---|---|---|
| K28.0 | ’001111 0100’ b | ’110000 1011’ b |
| K28.1 | ’001111 1001’ b | ’110000 0110’ b |
| K28.2 | ’001111 0101’ b | ’110000 1010’ b |
| K28.3 | ’001111 0011’ b | ’110000 1100’ b |
| K28.4 | ’001111 0010’ b | ’110000 1101’ b |
| K28.5 | ’001111 1010’ b | ’110000 0101’ b |
| K28.6 | ’001111 0110’ b | ’110000 1001’ b |
| K28.7 | ’001111 1000’ b | ’110000 0111’ b |
| K23.7 | ’111010 1000’ b | ’000101 0111’ b |
| K27.7 | ’110110 1000’ b | ’001001 0111’ b |
| K29.7 | ’101110 1000’ b | ’010001 0111’ b |
| K30.7 | ’011110 1000’ b | ’100001 0111’ b |

#### 5.3.3.2 Generating Transmission Characters

The appropriate entry in the table shall be found for the valid data byte or special code used in generating (encoding) a Transmission Character. The current value of the transmitter's running disparity shall be used to select the Transmission Character from its corresponding column. For each Transmission Character transmitted, a new value of the running disparity shall be calculated. This new value shall be used as the transmitter's current running disparity for the next valid data byte or special code to be encoded and transmitted.

#### 5.3.3.3 Validity of received Transmission Characters

The column corresponding to the current value of the receiver's running disparity shall be searched for the received Transmission Character. If the received Transmission Character is found in the proper column, then the Transmission Character shall be considered valid and the associated data byte or special code determined (decoded). If the received Transmission Character is not found in that column, then the Transmission Character shall be considered invalid and a code violation detected and reported to its associated port. Independent of the Transmission Character's validity, the received Transmission Character shall be used to calculate a new value of running disparity. This new value shall be used as the receiver's current running disparity for the next received Transmission Character.

Detection of a code violation does not necessarily indicate that the Transmission Character where the code violation was detected is in error. Code violations may result from a prior error that altered the running disparity of the bit stream but that did not result in a detectable error at the Transmission Character where the error occurred. The example shown in table 8 exhibits this behavior.

Copyright International Organization for Standardization
Provided by IHS under license with ISO
No reproduction or networking permitted without license from IHS Not for Resale

**Table 8 - Delayed Code Violation example**

| | RD | Character | RD | Character | RD | Character | RD |
|---|---|---|---|---|---|---|---|
| Transmitted character stream | - | D21.1 | - | D10.2 | - | D23.5 | + |
| Transmitted bit stream | - | ’101010 1001’ b | - | ’010101 0101’ b | - | ’111010 1010’ b | + |
| Bit stream after error | - | ’101010 1011’ b | + | ’010101 0101’ b | + | ’111010 1010’ b | + |
| Decoded character stream | - | D21.0 | + | D10.2 | + | code violation | + |

The K28.7 special character shall not be followed by any of the following special or data characters: K28.x, D3.x, D11.x, D12.x, D19.x, D20.x, or D28.x, where x is a value in the range 0 to 7, inclusive.

## 5.4 Word encoding and decoding

A Transmission Word is composed of four contiguous valid or invalid Transmission Characters treated as a unit. Four valid data bytes and special codes shall be encoded according to the rules specified by 5.3 to create a Transmission Word. Likewise, the Transmission Characters of a Transmission Word shall be decoded according to the rules specified by 5.3 to create valid data bytes and special codes.

## 5.5 Ordered Sets

### 5.5.1 General

An Ordered Set is a four-character combination of data and special Transmission Characters. Ordered Sets provide the ability to obtain bit and word synchronization that also establishes word boundary alignment. See 6.1.4.2 for the synchronization rules.

If an unrecognized Ordered Set is detected, it shall be treated as an Idle Primitive Signal. Treating unrecognized Ordered Sets as Idles allows future introduction of Ordered Sets for additional features and functions beyond the scope of this standard.

Each EOF-delimiter Ordered Set is defined such that negative current running disparity shall result after processing of the final (right-most) character of the Ordered Set. This, in combination with the running disparity initialization rules, ensures that the first Ordered Set following an EOF delimiter, transmitter power on, or transmitter exit from diagnostic mode (the definition of diagnostic mode is beyond the scope of this standard) shall always be transmitted with negative beginning running disparity. The Ordered Sets defined for the Primitive Signals and Primitive Sequences preserve this negative disparity, ensuring that the Ordered Sets associated with SOF Delimiters, Primitive Signals, and Primitive Sequences are always transmitted with negative beginning running disparity. As a result, Primitive Signal, Primitive Sequence, and SOF Delimiter Ordered Sets are defined for the negative beginning running disparity case only. The primary benefit of such a definition is that it allows Idles to be removed and added from an encoded bit stream one word at a time without altering the beginning running disparity associated with the Transmission Word subsequent to the removed Idle.

The K28.5 special character is used as the first character of all Ordered Sets defined in this standard for the following reasons:

a) Bits abcdef make up a comma; this is a singular bit pattern that in the absence of transmission errors shall not appear in any other location of a Transmission Character and shall not be generated across the boundaries of any two adjacent Transmission Characters. The comma should be used to easily find and verify character and word boundaries of the received bit stream.

Copyright International Organization for Standardization
Provided by IHS under license with ISO
No reproduction or networking permitted without license from IHS Not for Resale

b) Bits ghj of the encoded character present the maximum number of transitions, simplifying receiver acquisition of bit synchronization.

The second character of the Ordered Sets used to represent EOF Delimiters differentiates between normal and invalid frames. It also ensures that the running disparity resulting after processing of an EOF Ordered Set is negative independent of the value of beginning running disparity. Link_Reset (LR) and Link_Reset_Response (LRR) Ordered Sets are also differentiated through the use of their second characters.

The third and fourth characters of the Delimiter functions, Receiver_Ready, and the Idle are repeated to ensure that an error affecting a single character shall not result in the recognition of an Ordered Set other than the one transmitted.

For some Primitive Signals and Primitive Sequences, the second byte of the Ordered Set specifies the function of the Ordered Set. Bytes 3 and 4 of the Ordered Set are used to carry parameter information. The receiving FC_Ports analyze the parameter information before taking any action. Other Primitive Signals and Sequences are defined in FC-AL-2.

### 5.5.2 Frame delimiters

A frame delimiter is an Ordered Set that immediately precedes or follows the contents of a frame. Separate and distinct delimiters shall identify the start of a frame and the end of a frame and shall be recognized when a single Ordered Set is detected. The frame delimiters are listed in table 9. See 8.3 and 8.7 for the usage of each.

### 5.5.3 Primitive Signals

#### 5.5.3.1 Introduction

A Primitive Signal is an Ordered Set designated by this standard to have special meaning. All FC_Ports shall at a minimum recognize R_RDY and IDLE Primitive Signals. All Primitive Signals not recognized by the FC_Port shall be treated as an IDLE. When a single Ordered Set is detected possible Primitive Signals detected are listed in table 10.

To assure a sufficient number of Idles between frames, the originator of any Primitive Signal (except ARByx, ARB(val), MRK, SYNx, SYNy, and SYNz) shall precede and follow the Primitive Signal by a minimum of two Idles. Because Idles may be removed by intermediate transmitters, the number of Idles preceding or following a Primitive Signal at a receiver may be reduced to zero.

#### 5.5.3.2 Idle

Idle is a Primitive Signal transmitted on the link to indicate that link initialization is complete and to maintain link synchronization. Idles shall be transmitted on the link during periods of time when frames, other Primitive Signals or Primitive Sequences are not required to be transmitted. See 8.2 for the requirements for the insertion of Idle between frames.

#### 5.5.3.3 Receiver_Ready (R_RDY)

The R_RDY Primitive Signal is used in the buffer-to-buffer credit management mechanisms described in 18.5.

Copyright International Organization for Standardization
Provided by IHS under license with ISO
No reproduction or networking permitted without license from IHS Not for Resale

Validity of the frame is not implied by R_RDY. See 8.2 for frame spacing requirements.

**Table 9 - Frame Delimiters**

| Abbr. | Delimiter Function | Beginning RD | Ordered Set |
|---|---|---|---|
| SOFc1 | SOF Connect Class 1 | Negative | K28.5 - D21.5 - D23.0 - D23.0 |
| SOFi1 | SOF Initiate Class 1 | Negative | K28.5 - D21.5 - D23.2 - D23.2 |
| SOFn1 | SOF Normal Class 1 | Negative | K28.5 - D21.5 - D23.1 - D23.1 |
| SOFi2 | SOF Initiate Class 2 | Negative | K28.5 - D21.5 - D21.2 - D21.2 |
| SOFn2 | SOF Normal Class 2 | Negative | K28.5 - D21.5 - D21.1 - D21.1 |
| SOFi3 | SOF Initiate Class 3 | Negative | K28.5 - D21.5 - D22.2 - D22.2 |
| SOFn3 | SOF Normal Class 3 | Negative | K28.5- D21.5 - D22.1 - D22.1 |
| SOFc4 | SOF Activate Class 4 | Negative | K28.5 - D21.5 - D25.0 - D25.0 |
| SOFi4 | SOF Initiate Class 4 | Negative | K28.5 - D21.5 - D25.2 - D25.2 |
| SOFn4 | SOF Normal Class 4 | Negative | K28.5 - D21.5 - D25.1 - D25.1 |
| SOFf | SOF Fabric | Negative | K28.5 - D21.5 - D24.2 - D24.2 |
| EOFt | EOF Terminate | Negative | K28.5 - D21.4 - D21.3 - D21.3 |
| | | Positive | K28.5 - D21.5 - D21.3 - D21.3 |
| EOFdt | EOF Disconnect-Terminate-Class 1 or EOF Deactivate-Terminate-Class 4 | Negative | K28.5 - D21.4 - D21.4 - D21.4 |
| | | Positive | K28.5 - D21.5 - D21.4 - D21.4 |
| EOFa | EOF Abort | Negative | K28.5 - D21.4 - D21.7 - D21.7 |
| | | Positive | K28.5 - D21.5 - D21.7 - D21.7 |
| EOFn | EOF Normal | Negative | K28.5 - D21.4 - D21.6 - D21.6 |
| | | Positive | K28.5 - D21.5 - D21.6 - D21.6 |
| EOFni | EOF Normal-Invalid | Negative | K28.5 - D10.4 - D21.6 - D21.6 |
| | | Positive | K28.5 - D10.5 - D21.6 - D21.6 |
| EOFdti | EOF Disconnect-Terminate-Invalid Class 1 or EOF Disconnect-Deactivate-Invalid Class 4 | Negative | K28.5 - D10.4 - D21.4 - D21.4 |
| | | Positive | K28.5 - D10.5 - D21.4 - D21.4 |
| EOFrt | EOF Remove-Terminate Class 4 | Negative | K28.5 - D21.4 - D25.4 - D25.4 |
| | | Positive | K28.5 - D21.5 - D25.4 - D25.4 |
| EOFrti | EOF Remove-Terminate Invalid Class 4 | Negative | K28.5 - D10.4 - D25.4 - D25.4 |
| | | Positive | K28.5 - D10.5 - D25.4 - D25.4 |

--`,,```,,,,````-`-`,,`,,`,`,,`---

Copyright International Organization for Standardization
Provided by IHS under license with ISO
No reproduction or networking permitted without license from IHS Not for Resale

**Table 10 - Primitive Signals**

| Abbr. | Primitive Signal | Beginning RD | Ordered Set |
|---|---|---|---|
| Idle | Idle | Negative | K28.5 – D21.4 – D21.5 – D21.5 |
| R_RDY | Receiver_Ready | Negative | K28.5 – D21.4 – D10.2 – D10.2 |
| VC_RDY | Virtual Circuit Ready | Negative | K28.5 – D21.7 – VC_ID – VC_ID |
| BB_SCs | buffer-to-buffer State Change (SOF) | Negative | K28.5 - D21.4 – D22.4 – D22.4 |
| BB_SCr | buffer-to-buffer State Change (R_RDY) | Negative | K28.5 - D21.4 – D22.6 – D22.6 |
| SYNx | Clock Synchronization Word X | Negative | K28.5 – D31.3 – CS_X – CS_X |
| SYNy | Clock Synchronization Word Y | Negative | K28.5 – D31.3 – CS_Y – CS_Y |
| SYNz | Clock Synchronization Word Z | Negative | K28.5 – D31.3 – CS_Z – CS_Z |
| ARByx | Arbitrate | Negative | K28.5 – D20.4 – y – x |
| ARB(val) | Arbitrate | Negative | K28.5 – D20.4 – val – val |
| CLS | Close | Negative | K28.5 – D5.4 – D21.5 – D21.5 |
| DHD | Dynamic Half-Duplex | Negative | K28.5 – D10.4 – D21.5 – D21.5 |
| MRKtx | Mark | Negative | K28.5 – D31.2 – MK_TP – AL_PS |
| OPNyx | Open full-duplex | Negative | K28.5 – D17.4 – AL_PD – AL_PS |
| OPNyy | Open half-duplex | Negative | K28.5 – D17.4 – AL_PD – AL_PD |
| OPNyr | Open selective replicate | Negative | K28.5 – D17.4 – AL_PD – D31.7 |
| OPNfr | Open broadcast replicate | Negative | K28.5 – D17.4 – D31.7 – D31.7 |

#### 5.5.3.4 Virtual Circuit Ready (VC_RDY)

The VC_RDY Primitive Signal shall only be transmitted from an F_Port that supports class 4. The VC_RDY shall indicate that the interface buffer that is to receive the frame is available for frame reception and a single Class 4 frame is needed from the N_Port if it wishes to maintain the requested bandwidth. Validity of the frame is not implied by VC_RDY. The VC_RDY shall be recognized by an N_Port that supports class 4.

An N_Port shall not transmit VC_RDYs. An F_Port shall discard any VC_RDYs received.

#### 5.5.3.5 BB_SCs

The BB_SCs Primitive Signal shall indicate that a predetermined number ($2^{BB_SC_N}$) of Class 1 connect-request ($SOF_{c1}$ or $SOF_{c4}$), Class 2, or Class 3 frames were sent since the previous BB_SCs was sent. See 15.6.2.5 for requirements for determining BB_SC_N. See 18.5.11 for BB_SCs usage requirements. If the BB_SCs Primitive Signal is received by an Fx_Port, it shall be processed but shall not be passed through the Fabric. See 8.2 for frame spacing requirements.

Copyright International Organization for Standardization
Provided by IHS under license with ISO
No reproduction or networking permitted without license from IHS Not for Resale

#### 5.5.3.6 BB_SCr

The BB_SCr Primitive Signal shall indicate that a predetermined number ($2^{BB_SC_N}$) of R_RDY Primitive Signals were sent since the previous BB_SCr was sent. See 15.6.2.5 for requirements for determining BB_SC_N. See 18.5 for BB_SCr usage requirements. If the BB_SCr Primitive Signal is received by an Fx_Port, it shall be processed but shall not be passed through the Fabric. See 9.1 for frame spacing requirements.

#### 5.5.3.7 SYNx, SYNy, SYNz

See 27.3.3.1.

#### 5.5.3.8 ARByx, ARB(val)See [2]

For details on the Arbitrate Primitive Signals (ARByz, ARB(val)) refer to the Arbitrated Loop topology standard (see [2], FC-AL-2).

#### 5.5.3.9 CLS

For details on the Close Primitive Signal (CLS) refer to the Arbitrated Loop topology standard (see [2], FC-AL-2).

#### 5.5.3.10 DHD

For details on the Dynamic half-duplex Primitive Signal (DHD) refer to the Arbitrated Loop topology standard (see [2], FC-AL-2 ).

#### 5.5.3.11 MRKtx

For details on the Mark Primitive Signal (MRKtx) refer to the Arbitrated Loop topology standard (see [2], FC-AL-2).

#### 5.5.3.12 OPNyx

For details on the Open full-duplex Primitive Signal (OPNyx) refer to the Arbitrated Loop topology standard (see [2], FC-AL-2).

#### 5.5.3.13 OPNyy

For details on the Open half-duplex Primitive Signal (OPNyy) refer to the Arbitrated Loop topology standard (see [2], FC-AL-2).

#### 5.5.3.14 OPNyr

For details on the Open selective replicate Primitive Signal (OPNyr) refer to the Arbitrated Loop topology standard (see [2], FC-AL-2).

#### 5.5.3.15 DHD

For details on the Open broadcast replicate Primitive Signal (OPNfr) refer to the Arbitrated Loop topology standard (see [2], FC-AL-2).

### 5.5.4 Primitive Sequences

#### 5.5.4.1 Introduction

A Primitive Sequence is an Ordered Set that is transmitted repeatedly and continuously. Primitive Sequences are transmitted to indicate specific conditions within or conditions encountered by the receiver logic of an FC_Port. See table 11 for bit encodings of Primitive Sequences. The NOS, OLS, LR, and LRR Primitive Sequences shall be

--`,,```,,,,````-`-`,,`,,`,`,,`---

Copyright International Organization for Standardization
Provided by IHS under license with ISO
No reproduction or networking permitted without license from IHS Not for Resale

supported. If the port supports AL-2 the Arbitrated Loop topology standard (see [2], FC-AL-2), it shall support the various LIP, LPB, and LPE Primitives Sequences shown in table 11.

**Table 11 - Primitive Sequences**

| Abbr | Primitive Sequence | Beginning RD | Ordered Set |
|---|---|---|---|
| NOS | Not_Operational | Negative | K28.5 – D21.2 – D31.5 – D5.2 |
| OLS | Offline | Negative | K28.5 – D21.1 – D10.4 – D21.2 |
| LR | Link_Reset | Negative | K28.5 – D9.2 – D31.5 – D9.2 |
| LRR | Link_Reset_Response | Negative | K28.5 – D21.1 – D31.5 – D9.2 |
| LIP(F7,F7) | Loop Initialization - F7,F7 | Negative | K28.5 – D21.0 – D23.7 – D23.7 |
| LIP(F8,F7) | Loop Initialization - F8,F7 | Negative | K28.5 – D21.0 – D24.7 – D23.7 |
| LIP(F7,x) | Loop Initialization - F7,x | Negative | K28.5 – D21.0 – D23.7 – AL_PS |
| LIP(F8,x) | Loop Initialization - F8,x | Negative | K28.5 – D21.0 – D24.7 – AL_PS |
| LIPyx | Loop Initialization - reset | Negative | K28.5 – D21.0 – AL_PD – AL_PS |
| LIPfx | Loop Initialization - reset all | Negative | K28.5 – D21.0 – D31.7 – AL_PS |
| LIPba | Loop Initialization - reserved LIPba | Negative | K28.5 – D21.0 – b – a |
| LPByx | Loop Port Bypass | Negative | K28.5 – D9.0 – AL_PD – AL_PS |
| LPBfx | Loop Port Bypass all | Negative | K28.5 – D9.0 – D31.7 – AL_PS |
| LPEyx | Loop Port Enable | Negative | K28.5 – D5.0 – AL_PD – AL_PS |
| LPEfx | Loop Port Enable all | Negative | K28.5 – D5.0 – D31.7 – AL_PS |

Primitive Sequences shall be transmitted continuously while the condition exists. A detailed description of FC_Port state changes relative to Primitive Sequence reception and transmission is given in clause 7. When a Primitive Sequence is received and recognized, depending on the state of the FC_Port, a corresponding Primitive Sequence or Idles shall be transmitted in response as defined in clause 7.

Primitive Sequences transmitted from an Nx_Port to the locally attached Fx_Port shall remove a pending or existing dedicated connection. The locally attached Fx_Port shall respond appropriately to the Primitive Sequence received and shall notify the remote Fx_Port attached to the Nx_Port associated with this connection, which shall transmit the Link Reset Primitive Sequence if the connection is established or pending.

If a dedicated connection does not exist, a Primitive Sequence transmitted by an Nx_Port shall be received and recognized by the locally attached Fx_Port, but not transmitted through the Fabric.

Recognition of a Primitive Sequence shall require consecutive detection of three instances of the same Ordered Set without any intervening data indications from the receiver logic (FC-1).

#### 5.5.4.2 Not_Operational (NOS)

The NOS Primitive Sequence shall be transmitted to indicate that the FC_Port transmitting the NOS has detected a Link Failure condition or is Offline, waiting for OLS to be received.

--`,,```,,,,````-`-`,,`,,`,`,,`---

Copyright International Organization for Standardization
Provided by IHS under license with ISO
No reproduction or networking permitted without license from IHS Not for Resale

# 6 FC-1 Receiver and Transmitter State Diagrams

## 6.1 Receiver

### 6.1.1 Introduction

Whenever a signal (see [8], FC-PI-2 and [1], 10GFC) is detected on a fibre, the receiver attached to that fibre shall attempt to achieve synchronization on both bit and Transmission Word boundaries of the received encoded bit stream. Bit Synchronization is defined in 6.1.4.1. Transmission Word synchronization is defined in 6.1.4.2. Synchronization failures on either bit or Transmission Word boundaries are not separately identifiable; both cause loss-of-synchronization errors.

### 6.1.2 State Diagram Overview

The Receiver State Diagram is shown in figure 9.

The Receiver states are as follows:

a) State A (Loss of Synchronization),
b) State B.1 (No invalid Transmission Word Detected),
c) State B.2 (First invalid Transmission Word Detected),
d) State B.3 (Second invalid Transmission Word Detected),
e) State B.4 (Third invalid Transmission Word Detected), and
f) State C (Reset).

Being in one of the Word Synchronization Acquired states refers to being in any of the states B.1, B.2, B.3, or B.4.

The receiver state transitions are defined as follows:

1) Power-on,
2) Acquisition of Word Synchronization (see 6.1.6.2),
3) An invalid Transmission Word is detected (see 6.1.5.3),
4) A detection of a Loss-of-Signal condition (see 6.1.5.2),
5) Two consecutive valid Transmission Words are detected (see 6.1.5.3),
6) Reset condition imposed on the receiver (see 6.1.6.4), and
7) Exiting of receiver reset condition (see 6.1.6.4).

### 6.1.3 Operational and Not Operational conditions

When the receiver is Operational, it shall be in either State A (Loss-of-Synchronization State) or in one of the Word Synchronization Acquired states.

When the receiver is Not Operational, it shall be in State C (Reset State).

--`,,```,,,,````-`-`,,`,,`,`,,`---

Copyright International Organization for Standardization
Provided by IHS under license with ISO
No reproduction or networking permitted without license from IHS Not for Resale

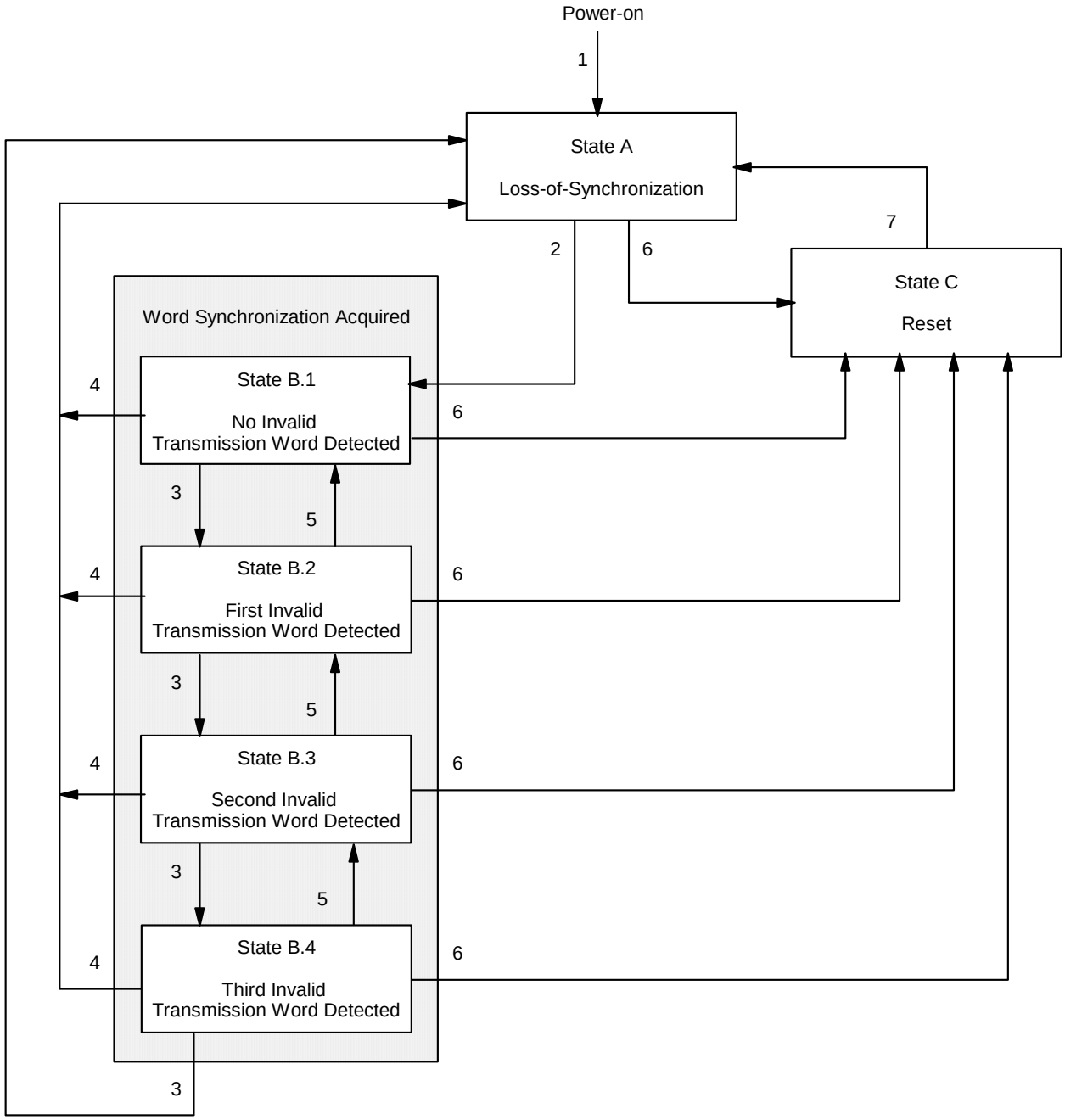


**Figure 9 - Receiver State Diagram**

### 6.1.4 Word Synchronization Procedure

The Word Synchronization procedure consists of first achieving Bit Synchronization (see 6.1.4.1), followed by achieving Word Synchronization (see 6.1.4.2).

#### 6.1.4.1 Bit Synchronization

An Operational receiver that is in State A (Loss-of-Synchronization State) shall first acquire Bit Synchronization before attempting to acquire Transmission Word Synchronization. Bit Synchronization is defined FC-PI-2 (see [8],

--`,,```,,,,````-`-`,,`,,`,`,,`---
Copyright International Organization for Standardization
Provided by IHS under license with ISO
No reproduction or networking permitted without license from IHS
Not for Resale

FC-PI-2 and [1], 10GFC). After achieving Bit Synchronization, the receiver shall remain in State A (Loss-of-Synchronization State) until it achieves Transmission Word Synchronization.

#### 6.1.4.2 Transmission Word synchronization

##### 6.1.4.2.1 Introduction

The comma contained within the K28.1, K28.5, and K28.7 special characters is a singular bit pattern that in the absence of transmission errors shall not appear in any other location of a Transmission Character and shall not be generated across the boundaries of any two adjacent Transmission Characters. This bit pattern is sufficient to identify the word alignment of the received bit stream. Some implementations (e.g., those that choose to implement the word alignment function in Continuous-mode alignment) may choose to align on the full K28.5 Ordered Set to decrease the likelihood of false alignment when bit errors are present in the received bit stream.

Placement of a detected comma or K28.5 Transmission Character at the left-most position of a received Transmission Word ensures proper alignment of that word and of subsequently received Transmission Words. Ordered Set detection shall include both detection of the individual Transmission Characters that make up an Ordered Set and proper alignment of those characters (i.e., the Special Character used to designate an Ordered Set shall be aligned in the leading (left-most) character position of the received Transmission Word).

##### 6.1.4.2.2 Achieving Word Synchronization

An receiver that is in State A (Loss-of-Synchronization State) and has acquired Bit Synchronization shall attempt to acquire Transmission Word Synchronization. Transmission Word Synchronization is acquired by the detection of three Ordered Sets containing commas in their left-most bit positions without an intervening invalid Transmission Word, as specified in (see clause 6.1.5.3). The third detected Ordered Set shall change the state from State A (Loss-of-Synchronization State) to State B.1 (No invalid Transmission Word detected State) using transition 2. The third detected Ordered Set shall be considered valid information and shall be decoded and provided by the receiver to its FC_Port. A receiver in any of the Word Synchronization Acquired states shall provide information that has been received from its attached fibre and decoded.

The method used by the receiver to implement the word alignment function and to detect Ordered Sets is not defined by this standard.

##### 6.1.4.2.3 Word alignment methods

###### 6.1.4.2.3.1 Continuous-mode alignment

Continuous-mode alignment allows the receiver to reestablish word alignment at any point in the incoming bit stream while the receiver is Operational. Such realignment is likely (but not guaranteed) to result in code violations and subsequent Loss-of-Synchronization. Under certain conditions, it may be possible to realign an incoming bit stream without Loss-of-Synchronization. If such a realignment occurs within a received frame, detection of the resulting error condition is dependent upon higher-level function (e.g., invalid CRC, missing EOF Delimiter).

###### 6.1.4.2.3.2 Explicit-mode alignment

Explicit-mode alignment allows the receiver to reestablish word alignment under controlled circumstances (e.g., while in the Loss-of-Synchronization State). Once Synchronization has been acquired, the word alignment function of the receiver is disabled.

### 6.1.5 Loss of Word Synchronization

#### 6.1.5.1 Introduction

Loss of Word Synchronization shall occur in the following conditions:

a) a Loss of Signal is detected when in any of the Word Synchronization Acquired states, or

Copyright International Organization for Standardization
Provided by IHS under license with ISO
No reproduction or networking permitted without license from IHS Not for Resale

b) an invalid Transmission Word is detected in State B.4.

#### 6.1.5.2 Detection of loss of Signal

A receiver may provide a Loss-of-Signal check.

#### 6.1.5.3 Detection of an invalid Transmission Word

When in any of the Word Synchronization Acquired states each received Transmission Word is tested to determine the validity of the Transmission Word.

An invalid Transmission Word shall be recognized by the receiver when one of the following conditions is detected:

a) A code violation on a character basis, as specified by tables 6 and 7, is detected within a Transmission Word. This is referred to as a code violation condition.
b) Any valid special character is detected in the second, third, or fourth character position of a Transmission Word. This is referred to as an invalid special code alignment condition.
c) A defined Ordered Set (see 5.5) is received with improper beginning running disparity (e.g., a SOF delimiter is received with positive beginning running disparity, an EOF delimiter specified for positive beginning running disparity is received when beginning running disparity for that Transmission Word is negative). This is referred to as an invalid beginning running disparity condition.

### 6.1.6 State transitions

#### 6.1.6.1 Default State

A receiver shall enter state A (Loss-of-Synchronization) on power-on (i.e., default).

#### 6.1.6.2 State A (Loss of Synchronization)

The Loss-of-Synchronization State shall be entered upon the following conditions:

a) completion of the Loss-of-Synchronization procedure while in state B.4 (Third Invalid Transmission Word Detected) using transition 3;
b) detection of Loss-of-Signal while in states B.1, B.2, B.3, or B.4 using transition 4; or
c) completion of the reset while in State C (Reset) using transition 7.

While in the Loss-of-Synchronization State, the receiver may attempt to reacquire bit re synchronization. In some instances, this may allow the receiver to regain Word Synchronization when it otherwise would not be possible. However, initiation of bit re synchronization may also delay the re synchronization process by forcing the receiver to reestablish a clock reference when such reestablishment is otherwise unnecessary (see [8], FC-PI-2 and [1], 10GFC for a detailed discussion of Bit Synchronization).

When Word Synchronization is acquired the receiver enters state B.1 (No Invalid Transmission Word Detected) using transition 2. Imposing a reset condition upon the receiver shall cause any state to transition to the C state using transition 6.

#### 6.1.6.3 State B (Word Synchronization Acquired)

The following four states are defined as Word Synchronization Acquired states:

1) No Invalid Transmission Word Detected State (state B.1),
2) The First Invalid Transmission Word Detected State (state B.2),
3) The Second Invalid Transmission Word Detected State (state B.3), and
4) The Third Invalid Transmission Word Detection State (state B.4).

NOTE The rationale for the loss-of-Synchronization procedure is to reduce the likelihood that a single error results in a

Copyright International Organization for Standardization
Provided by IHS under license with ISO
No reproduction or networking permitted without license from IHS Not for Resale

Loss-of-Synchronization. A single two-bit error positioned to overlap two Transmission Words could result in the detection of three invalid Transmission Words; the two Transmission Words directly affected by the error and a subsequent Transmission Word that was affected by a disparity change resulting from the error. The procedure described above would maintain Synchronization in such a case.

#### 6.1.6.3.1 State B.1 (No Invalid Transmission Word Detected State)

When the procedure is in state B.1, checking for an invalid Transmission Word shall be performed. Any invalid Transmission Word shall cause the B.1 state to transition to the B.2 state (transition 3). A Loss of Signal condition shall cause the B.1 state to transition to the A state (transition 4). A reset condition is imposed upon the receiver causes the B.1 state to transition to the C state (transition 6).

#### 6.1.6.3.2 State B.2 (First Invalid Transmission Word Detected State)

When the procedure is in state B.2, checking for an invalid Transmission Word shall be performed. Any invalid Transmission Word causes the B.2 state to transition to the B.3 state (transition 3). If two consecutive valid Transmission Words are received, the B.2 state transitions to the B.1 state (transition 5). A Loss of Signal condition shall cause the B.2 state to transition to the A state (transition 4). A reset condition is imposed upon the receiver causes the B.2 state to transition to the Reset State C (transition 6).

#### 6.1.6.3.3 State B.3 (Second Invalid Transmission Word Detected State)

When the procedure is in state B.3, checking for an invalid Transmission Word shall be performed. Any invalid Transmission Word causes the B.3 state to transition to the B.4 state (transition 3). If two consecutive valid Transmission Words are received, the B.3 state transitions to the B.2 state (transition 5). A Loss of Signal condition shall cause the B.3 state to transition to the A state (transition 4). A reset condition is imposed upon the receiver causes the B.3 state to transition to the Reset State C (transition 6).

#### 6.1.6.3.4 State B.4 (Third Invalid Transmission Word Detection State)

When the procedure is in state B.4, checking for an invalid Transmission Word shall be performed. Any invalid Transmission Word causes the B.4 state to transition to the A state (transition 3). If two consecutive valid Transmission Words are received, the B.4 state transitions to the B.3 state (transition 5). A Loss of Signal condition shall cause the B.4 state to transition to the A state (transition 4). A reset condition is imposed upon the receiver causes the B.2 state to transition to the Reset State C (transition 6).

### 6.1.6.4 State C (Reset)

When a receiver reset condition is imposed on a receiver, either internally or externally, the receiver shall enter the Reset State (transition 6). Once the Reset State is entered, the receiver shall become Not Operational and shall remain in the Reset State until it is subsequently made Operational by exiting the receiver reset condition.

NOTE 1 A typical use of receiver reset is to force a receiver in the Loss-of-Synchronization State to attempt reacquisition of Bit Synchronization. Entry into this state does not necessarily indicate loss of Bit Synchronization.

NOTE 2 The conditions required for a receiver in the Reset State to exit that state are not defined by this standard. Such conditions may be based on explicit indications. They may also be time-dependent in nature.

When the receiver is Operational after exiting from a receiver reset condition imposed upon it, either externally or internally, the receiver shall enter the Loss-of-Synchronization State (State A).

NOTE 3 The conditions required for a receiver in the Reset State to exit that state are not defined by this standard. Such conditions may be based on explicit indications. They may also be time-dependent in nature.

--`,,```,,,,````-`-`,,`,,`,`,,`---

Copyright International Organization for Standardization
Provided by IHS under license with ISO
No reproduction or networking permitted without license from IHS Not for Resale

## 6.2 Transmitter

### 6.2.1 State Diagram

The Transmitter State Diagram is shown in figure 10.

The transmitter states are as follows:

a) Not enabled,
b) Working, and
c) Failure.

The transmitter state transition conditions are as follows:

1) Power on,
2) Receipt of transmitter enable request (see 6.2.3.2),
3) Receipt of a transmitter disable request (see 6.2.3.3), and
4) Detection of a transmitter failure condition (see 6.2.3.3).

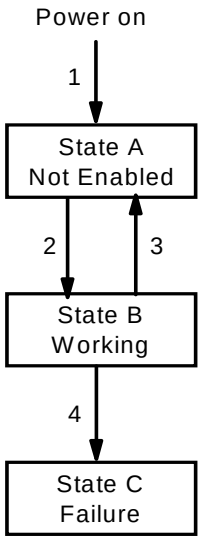


**Figure 10 - Transmitter State Diagram**

### 6.2.2 Operational condition

A transmitter actively attempting to transmit an encoded bit stream onto its attached fibre is defined to be in State B (Working).

Under certain conditions, it may be necessary or desirable to cease the transmission of signals by a transmitter onto its attached Fibre. When such an action is initiated by a request from the FC_Port associated with a transmitter or as the result of an external event, a transmitter shall transition to State A (Not Enabled) using transition 3.

### 6.2.3 State Transitions

#### 6.2.3.1 Not Enabled State

Entry into State A (Not Enabled) may result from external error conditions detected by the LCF, or it may result from internally generated signals. The transmitter shall enter State A (Not Enabled) under the following conditions:

a) completion of transmitter initialization (transition 1), and

--`,,```,,,,````-`-`,,`,,`,`,,`---
Copyright International Organization for Standardization
Provided by IHS under license with ISO
No reproduction or networking permitted without license from IHS
Not for Resale

b) processing of an Transmitter Disable Request (transition 3).

The transmitter shall remain in State A (Not Enabled) until it completes a Transmitter Enable Request (transition 2).

#### 6.2.3.2 Working State

An Operational transmitter shall enter State B (Working) when its transmitter becomes enabled. A transmitter shall become enabled after completing a Transmitter Enable Request (transition 2).

While in State B (Working), a transmitter attached to a Fibre shall constantly attempt to transmit an encoded bit stream onto that Fibre.

While in the Working State, a transmitter shall actively attempt to transmit valid requests for information transfer from its associated FC_Port. Valid requests for information transfer conform to the following rules:

a) requests for Ordered Set transmission are aligned with the word alignment established by the transmitter upon entry into the Working State, and
b) requests for valid data byte transmission are aligned with the byte alignment established by the transmitter upon entry into the Working State. Each byte of a four-byte word is aligned based on the established word alignment.

The following requests for information transfer are inconsistent with the established transmission rules and shall not occur:

a) transmission requests improperly aligned with transmission (word and byte) boundaries,
b) transmission requests not consistent with the current transmission boundary,
c) requests for Ordered Set transfers on a non-word boundary,
d) requests for data transfers overlapping an Ordered Set transfer currently in progress, and
e) lack of transmission requests (i.e., additional bytes required to complete a Transmission Word) when a Transmission Word has been partially transmitted as a result of prior transmission requests.

A transmitter completing a Transmitter Disable Request shall transition from State B (Working) to State A (Not Enabled). Some transmitters are capable of monitoring this transmitted signal and verifying its validity. Such transmitters may transition from State B (Working) to State C (Failure) as a result of this monitoring.

#### 6.2.3.3 Failure State

A transmitter shall enter State C (Failure) upon recognition (via signal monitoring) of a transmitter-failure condition detected while in State B (Working). Once State C (Failure) is entered, the transmitter shall become Not Operational and shall remain in State C (Failure) until it is subsequently made Operational through external intervention.

A transmitter shall not be required to provide a signal monitoring function. Each transmitter capable of monitoring its transmitted signal shall define how this monitoring is to take place. It shall also define the conditions necessary to cause the transmitter to recognize a transmitter-failure condition and change from State B (Working) to State C (Failure).

NOTE Monitoring of average light levels is a typical method of transmitter monitoring. Typically, an error condition is detected when the transmitted light level of a transmitter falls outside of the range of allowed values specified for its transmitter class (see [8], FC-PI-2 and [1], 10GFC for a discussion of signal monitoring).

Copyright International Organization for Standardization
Provided by IHS under license with ISO
No reproduction or networking permitted without license from IHS Not for Resale

# 7 FC_Port state machine

## 7.1 State diagram

An FC_Port shall conform to table 12. For conditions not explicitly listed to cause state changes to occur, the FC_Port shall remain in the current state. See [2], FC-AL-2 for initialization of devices that support a loop port state machine.

## 7.2 Active State (AC)

An FC_Port shall enter the Active State when it completes the Link Initialization Protocol (see 7.6.2) or the Link Reset Protocol (see 7.6.3). When an FC_Port is in the Active State, it is able to transmit and receive frames and Primitive Signals. When a Primitive Sequence (see 5.5.4) is received, the FC_Port shall exit the Active State as defined in table 12. If any frame or Primitive Signal (see 5.5.3) is received and recognized, the FC_Port shall remain in the Active State.

If conditions as indicated in the referenced clauses are detected within the FC_Port, the Active State shall be exited and the FC_Port shall perform the indicated Primitive Sequence Protocol:

a) Link Initialization (see 7.6.2) (The next state is OL1 State),
b) Link Reset (see 7.6.3) (The next state is the LR1 State),
c) Link Failure (see 7.6.4) (The next state is the LF2 State), and
d) Online-to-Offline (see 7.6.5) (The next state is the OL1 State).

## 7.3 Link Recovery

### 7.3.1 Link recovery hierarchy

The Link Recovery hierachy is shown in figure 36.

### 7.3.2 LR Transmit State (LR1)

#### 7.3.2.1 General (while in the LR1 state)

An FC_Port shall enter the LR1 State to initiate the Link Reset Protocol. While in the LR1 State, the FC_Port shall transmit the LR Primitive Sequence. When a Primitive Sequence is received, the FC_Port shall respond as defined in table 12.

#### 7.3.2.2 Class 1 (while in the LR1 state)

A pending or existing dedicated connection shall be removed and the end-to-end Credit associated with the connected Nx_Ports shall be reset to the Login value. An Fx_Port shall process or discard any Class 1 connect-request or Class 6 connect-request frames currently held in the receive buffer associated with the outbound fibre of the attached FC_Port. The locally attached Fx_Port shall enter the LR2 State and shall transmit the Link Reset Primitive Sequence to the remote Fx_Port (i.e., initiate Link Reset Protocol).

When LR is received and recognized, or transmitted; all Class 1 frame Sequences that are open in an Nx_Port shall be abnormally terminated. When an FC_Port is transmitting the Link Reset Primitive, all Class 1 frames received shall be discarded. See 20.8 for more discussion on Connection Recovery.

Copyright International Organization for Standardization
Provided by IHS under license with ISO
No reproduction or networking permitted without license from IHS Not for Resale

.

**Table 12 - FC_Port states**

| | Current State | | | | | | | | |
|---|---|---|---|---|---|---|---|---|---|
| | **Active** | **Link Recovery** | | | **Link Failure** | | **Offline** | | |
| | **AC** (see 7.2) | **LR1** (see 7.3.2) | **LR2** (see 7.3.3) | **LR3** (see 7.3.4) | **LF1** (see 7.4.1) | **LF2** (see 7.4.2) | **OL1** (see 7.5.2) | **OL2** (see 7.5.3) | **OL3** (see 7.5.4) |
| | **Primitive Sequence Transmitted while in state:** | | | | | | | | |
| | IDLE | LR | LRR | IDLE | OLS | NOS | OLS | LR | NOS |
| **Input Event:** | **Next State:** | | | | | | | | |
| L >> LR | LR2 | LR2 | LR2 | LR2 | LR2 | LF2 | LR2[b] | LR2 | LF2 |
| L >> LRR | LR3[c] | LR3 | LR3 | LR3 | LF1 | LF2 | OL1 | LR3 | LF2 |
| L >> IDLES | AC | LR1 | AC | AC | LF1 | LF2 | OL1 | OL2 | OL3 |
| L >> OLS | OL2 | OL2 | OL2 | OL2 | OL2 | OL2 | OL2[b] | OL2 | OL2 |
| L > > NOS | LF1 | LF1 | LF1 | LF1 | LF1 | LF1 | LF1[b] | LF1 | LF1 |
| Loss-of-Signal | LF2 | LF2 | LF2 | LF2 | LF2 | LF2[a] | OL3[b] | OL3[a] | OL3 |
| Loss of Sync > Limit | LF2 | LF2 | LF2 | LF2 | LF2 | LF2 | OL3[b] | OL3 | OL3 |
| Event time-out (R_T_TOV) | N/A | LF2 | LF2 | LF2 | LF2[d] | N/A | OL3[b,f] | OL3[e] | N/A |
| Link time-out (E_D_TOV) | LR1 | LR1 | LR1 | LR1 | LR1 | LR1 | LR1 | LR1 | LR1 |

LEGEND
L >> means receiving from the Link
N/A means not applicable

[a] Depending on Laser safety requirements, the transmitter may enter a “pulse” transmission mode of operation when Loss-of-Signal is detected.

[b] All events are ignored until the FC_Port determines it is time to leave the OL1.

[c] A Primitive Sequence Protocol error is detected (An improper Primitive Sequence was received in this State). The Primitive Sequence Protocol error count in the LESB is incremented.

[d] The time-out period starts timing when NOS is no longer recognized and none of the other events occur that cause a transition out of the state.

[e] The time-out period starts timing when OLS is no longer recognized and none of the other events occur that cause a transition out of the state.

[f] The time-out period starts timing when the FC_Port is attempting to go online transmits OLS, and none of the other events occur that cause a transition out of state.

#### 7.3.2.3 Class 2 and Class 3 (while in the LR1 state)

Buffer-to-buffer Credit (associated with Class 1 ($SOF_{c1}$), Class 6 ($SOF_{c1}$), Class 2, and Class 3) within the FC_Port shall be reset to its Login value. An Fx_Port shall process or discard any Class 2 or Class 3 frames currently held in the receive buffer associated with the outbound fibre of the attached FC_Port. Class 2 end-to-end Credit shall not be affected.

Copyright International Organization for Standardization
Provided by IHS under license with ISO
No reproduction or networking permitted without license from IHS Not for Resale

#### 7.3.2.4 Class 4 (while in the LR1 state)

An N_Port in the LR1 State:

a) shall retain Class 4 circuit states,
b) shall set VC_Credit equal to zero for all Class 4 circuits, and
c) may discard Class 4 frames received on Live Class 4 circuits.

The locally attached F_Port in the LR1 State:

a) shall retain Class 4 circuit states,
b) shall discard Class 4 frames destined for the N_Port, and
c) may discard Class 4 frames received from the N_Port.

The QoSF with the locally attached F_Port in the LR1 State:

a) shall suspend VC_RDY pacing at the appropriate N_Ports for each Live Class 4 circuit to or from the N_Port being sent the LR Primitive Sequence in the LR1 State, and
b) for each Live Class 4 circuit to or from the affected N_Port, the QoSF shall send the END Link_Control command to each affected remote N_Port and the local N_Port to remove each Class 4 circuit when the Active State is re-entered for the affected N_Port (see 11.2.4.3 and 25.3.5.5).

#### 7.3.2.5 Class 6 (while in the LR1 state)

A pending or existing Multicast Connection shall be removed and the end-to-end Credit associated with the connected N_Ports shall be reset to the Login value. The locally attached F_Port shall enter the LR2 State and shall notify all other F_Ports attached to the N_Ports participating in the Class 6 connection. The notified F_Ports shall transmit the Link Reset Primitive to their connected N_Ports (i.e., initiate Link Reset Protocol).

All Class 6 frame Sequences that are open in an N_Port when LR is received and recognized, or transmitted shall be abnormally terminated. When an N_Port is transmitting the Link Reset Primitive, all Class 6 frames received shall be discarded. See 20.8 for more discussion on Connection Recovery.

### 7.3.3 LR Receive State (LR2)

#### 7.3.3.1 General (while in the LR2 state)

An FC_Port shall enter the LR2 State when it receives and recognizes the LR Primitive Sequence while it is not in the OL3 or LF2 State. While in the LR2 State, the FC_Port shall transmit the LRR Primitive Sequence. When a Primitive Sequence is received, the FC_Port shall respond as defined in table 12.

An FC_Port that receives and recognizes the Link Reset Primitive Sequence shall process or discard Class 2, or Class 3 frames currently held in its receive buffers. Buffer-to-buffer Credit (associated with Class 1 ($SOF_{c1}$), Class 6 ($SOF_{c1}$), Class 2, and Class 3) within the FC_Port shall be reset to its Login value.

#### 7.3.3.2 Class 1 (while in the LR2 state)

A pending or existing dedicated connection shall be removed and the end-to-end Credit associated with the connected Nx_Ports shall be reset to the Login value. All Class 1 frame Sequences that are open in an Nx_Port when LR is received and recognized shall be abnormally terminated.

#### 7.3.3.3 Class 4 (while in the LR2 state)

An N_Port in the LR2 State shall:

a) retain Class 4 circuit states, and
b) set VC_Credit equal to zero for all Class 4 circuits.

Copyright International Organization for Standardization
Provided by IHS under license with ISO
No reproduction or networking permitted without license from IHS Not for Resale

The locally attached F_Port in the LR2 State shall:

a) retain Class 4 circuit states,
b) discard Class 4 frames destined for the N_Port, and
c) may discard Class 4 frames received from the N_Port.

The QoSF with the locally attached F_Port in the LR1 State:

a) shall suspend VC_RDY pacing for each appropriate N_Port for each Live Class 4 circuit to or from the N_Port sending the LR Primitive Sequence in the LR2 State, and
b) for each Live Class 4 circuit to or from the affected N_Port, the QoSF shall send the END Link_Control command to each affected remote N_Port and the local N_Port to remove each Class 4 circuit when the Active State is re-entered for the affected N_Port (see 11.2.4.3 and 25.3.5.5).

#### 7.3.3.4 Class 6 (while in the LR2 state)

A pending or existing Multicast Connection shall be removed and the end-to-end Credit associated with the connected N_Ports shall be reset to the Login value. All Class 6 frame Sequences that are open in an N_Port when LR is received and recognized shall be abnormally terminated.

### 7.3.4 LRR Receive State (LR3)

#### 7.3.4.1 General (while in the LR3 state)

An FC_Port shall enter the LR3 State when it receives and recognizes the LRR Primitive Sequence while it is in the Active State, LR1 State, LR2 State, or OL2 State. While in the LR3 State, the FC_Port shall transmit Idles. When a Primitive Sequence is received, the FC_Port shall respond as defined in table 12.

#### 7.3.4.2 Class 1 and Class 6 behavior (while in the LR3 state)

An Nx_Port in the LR3 State shall retain Class 1 and Class 6 dedicated connections.

The locally attached Fx_Port in the LR3 State:

a) shall retain Class 1 and Class 6 dedicated connections,
b) shall discard Class 1 and Class 6 frames destined for the Nx_Port.

#### 7.3.4.3 Class 4 behavior (while in the LR2 state)

An N_Port in the LR3 State shall retain Class 4 circuit states.

The locally attached F_Port in the LR3 State:

a) shall retain Class 4 circuit states, and
b) shall discard Class 4 frames destined for the N_Port.

The QoSF with the locally attached F_Port in the LR3 State:

a) shall retain the suspension of VC_RDY transmission to the N_Port, and
b) shall retain suspension of VC_RDY pacing to remote N_Ports for all Live Class 4 circuits for the affected N_Port.

Copyright International Organization for Standardization
Provided by IHS under license with ISO
No reproduction or networking permitted without license from IHS Not for Resale

## 7.4 Link Failure

### 7.4.1 NOS Receive State (LF1)

#### 7.4.1.1 General

An FC_Port shall enter the LF1 State when it receives and recognizes the NOS Primitive Sequence. Upon entry into the LF1 State, the FC_Port shall update the appropriate error counter in the Link Error Status Block (see 21.8). Only one error per Link Failure event shall be recorded. When a Primitive Sequence is received, the FC_Port shall respond as defined in table 12.

#### 7.4.1.2 Class 4 behavior

An N_Port in the LF1 State shall set all Class 4 circuits to the Nonexisting State.

The locally attached F_Port in the LF1 State shall set all Class 4 circuits to the Nonexisting State.

The Fabric with the locally attached F_Port in the LF1 State shall remove Dormant or Live Class 4 circuits when the LF1 State is entered (see 25.3.5.5).

### 7.4.2 NOS Transmit State (LF2)

#### 7.4.2.1 General

An FC_Port shall enter the LF2 State when a Link Failure condition is detected. Upon entry into the LF2 State, the FC_Port shall update the appropriate error counter in the Link Error Status Block (see 21.8). Only one error per Link Failure event shall be recorded. The FC_Port shall remain in the LF2 State while the condition that caused the Link Failure, exists. While in the LF2 State, the FC_Port shall transmit the NOS Primitive Sequence.

When the Link Failure condition is no longer detected, the FC_Port shall respond to Primitive Sequences received as defined in table 12.

Transmission of NOS by an Nx_Port to its locally attached Fx_Port of a Fabric shall remove a pending or existing dedicated connection. The locally attached F_Port shall enter the LR2 State and shall notify all other F_Ports attached to the N_Ports participating in the Class 6 connection. The notified F_Ports shall transmit the Link Reset Primitive to their connected N_Ports (i.e., initiate Link Reset Protocol).

If a dedicated connection does not exist, NOS transmission by an Nx_Port shall be received and recognized by the locally attached Fx_Port, but not transmitted through the Fabric. The Fx_Port shall respond by entering the LF1 State.

#### 7.4.2.2 Class 4 behavior

An N_Port in the LF2 State shall set all Class 4 circuits to the Nonexisting State.

The locally attached F_Port in the LF2 State shall set all Class 4 circuits to the Nonexisting State.

The QoSF with the locally attached F_Port in the LF2 State shall remove Dormant or Live Class 4 circuits for the affected N_Port when the LF2 State is entered (see 25.3.5.5).

## 7.5 Offline

### 7.5.1 General

While Offline, an FC_Port shall not record receiver errors (e.g., Loss-of-Synchronization). NOS Reception or Link Failure conditions that are detected shall not be recorded as Link Failure events in the Link Error Status Block (see

21.8).

### 7.5.2 OLS Transmit State (OL1)

#### 7.5.2.1 Actions applicable to all classes

An FC_Port shall enter the OL1 State in order to:

a) perform the Link Initialization Protocol (see 7.6.2) in order to exit the Offline State, or
b) transition from Online-to-Offline using the Online-to-Offline Protocol (see 7.6.5).

When the FC_Port enters the OL1 State, it shall transmit OLS for a minimum time of 5 ms. After that period of time has elapsed, the FC_Port shall respond as defined table 12 when a Primitive Sequence is received.

While an FC_Port is attempting to go Online, if no Primitive Sequence is received or event detected that causes the FC_Port to exit the OL1 State after R_T_TOV, the FC_Port shall enter the OL3 State.

Transmission of OLS by an Nx_Port to its locally attached Fx_Port of a Fabric shall remove a pending or existing Class 1 or Class 6 connection. The locally attached F_Port shall enter the LR2 State and shall notify all other F_Ports attached to the N_Ports participating in the Class 6 connection. The notified F_Ports shall transmit the Link Reset Primitive to their connected N_Ports (i.e., initiate Link Reset Protocol).

If a dedicated connection does not exist, OLS transmission by an Nx_Port shall be received and recognized by the locally attached Fx_Port, but not transmitted through the Fabric. The Fx_Port shall respond by entering the OL2 State.

#### 7.5.2.2 Class 4 behavior

An N_Port in the OL1 State shall set all Class 4 circuits to the Nonexisting State.

The locally attached F_Port in the OL1 State shall set all Class 4 circuits to the Nonexisting State.

The QoSF with the locally attached F_Port in the OLS Transmit states shall remove Dormant or Live Class 4 circuits for the affected remote N_Ports when the LF1 State is entered (see 25.3.5.5).

### 7.5.3 OLS Receive State (OL2)

#### 7.5.3.1 General

An FC_Port shall enter the OL2 State when it receives and recognizes the OLS Primitive Sequence. When a Primitive Sequence is received, the FC_Port shall respond as defined in table 12. Detection of Loss-of-Signal or Loss-of-Synchronization shall not be counted as a Link Failure event in the Link Error Status Block.

#### 7.5.3.2 Class 4 behavior

An N_Port in the OL2 State shall set all Class 4 circuits to the Nonexisting State.

The locally attached F_Port in the OL2 State shall set all Class 4 circuits to the Nonexisting State.

The QoSF with the locally attached F_Port in the OL2 State shall remove Dormant or Live Class 4 circuits for the affected remote N_Ports when the LF1 State is entered (see 25.3.5.5).

### 7.5.4 Wait for OLS State (OL3)

#### 7.5.4.1 Actions applicable to all classes

An FC_Port shall enter the OL3 State when it detects Loss-of-Signal or Loss-of-Synchronization for more than a

Copyright International Organization for Standardization
Provided by IHS under license with ISO
No reproduction or networking permitted without license from IHS Not for Resale

timeout period (R_T_TOV) while it is in the OLS Receive or Transmit State at an appropriate time during the Link Initialization Protocol (see 7.6.2).

Upon entry into the OL3 State, the FC_Port shall transmit the NOS Primitive Sequence. When a Primitive Sequence is received, the FC_Port shall respond as defined in table 12.

#### 7.5.4.2 Class 4 behavior

An N_Port in the OL3 State shall retain Class 4 circuits in the Nonexisting State.

The locally attached F_Port in the OL3 State shall retain Class 4 circuits in the Nonexisting State.

## 7.6 Primitive Sequence protocols

### 7.6.1 Functions

Primitive Sequence Protocols provide two basic functions. The first function is to notify the other end of the link that a specific type of link error has occurred. The second function is to reset the link to a known state at both ends.

### 7.6.2 Link Initialization protocol

The Link Initialization protocol shall be performed by the FC_Port after one of the following events has occurred:

a) powered-on
b) internal reset (the definition of internally reset is beyond the scope of this standard), or
c) has been offline and desires to come back online.

The FC_Ports involved may be an N_Port and F_Port or two N_Ports. The Link Initialization protocol begins when the FC_Port enters the OL1 State after one of the above events has been detected and is complete when the FC_Port enters the Active State.

### 7.6.3 Link Reset protocol

The Link Reset Protocol shall be performed when any of the following conditions are detected:

a) Connection Recovery (see 20.8),
b) Link timeout (see 21.2.3),
c) buffer-to-buffer overrun (i.e., an FC_Port receives a frame subject to buffer-to-buffer flow control without a buffer available).

The Link Reset protocol begins when the FC_Port enters the LR1 State after one of the above events has been detected and is complete when the FC_Port enters the Active State.

If an FC_Port, performing the Link Reset Protocol, enters the LR3 State, without receiving an appropriate response within R_T_TOV, a Link Failure shall be detected and the Link Failure Protocol shall be performed.

### 7.6.4 Link Failure protocol

The Link Failure Protocol shall be performed after an FC_Port has detected one of the following conditions:

a) a Loss-of-Synchronization for a period of time greater than R_T_TOV,
b) Loss-of-Signal while not in the Offline State, or
c) Link Reset Protocol timeout error is detected (see 7.6.3).

The Link Failure protocol begins when the FC_Port enters the LF2 State after one of the above events has been detected and is complete when the Active State is entered.

Copyright International Organization for Standardization
Provided by IHS under license with ISO
No reproduction or networking permitted without license from IHS Not for Resale

### 7.6.5 Online-to-offline protocol

The FC_Port shall perform the Online-to-offline Protocol to enter the Offline State from the Active State. This protocol shall be performed in order to power-down or to perform diagnostics (diagnostic requirements are beyond the scope of this standard). This Protocol provides an FC_Port with a graceful indication prior to Loss-of-Signal. This avoids logging an error event for a normal system function. The Online-to-offline protocol shall start when the FC_Port enters the OL1 State.

After transmitting OLS for the time specified in 7.5, the FC_Port shall be Offline and may do any of the following:

a) perform diagnostic procedures,
b) turn off its transmitter,
c) transmit any signal (excluding Primitive Sequences) without errors being detected by the attached FC_Port
d) power-down or
e) start the Link Initialization protocol.

NOTE After entering the OL1 State and transmitting OLS for a minimum of 5 ms, the FC_Port may then transmit any Transmission Word other than LR, LRR, or NOS without causing the remote FC_Port to leave the OL2 State.

Copyright International Organization for Standardization
Provided by IHS under license with ISO
No reproduction or networking permitted without license from IHS Not for Resale

# 8 Frame formats

## 8.1 General frame format

All FC-2 frames shall follow the frame format as shown in figure 11. An FC-2 frame is composed of a SOF delimiter, frame content, and an EOF delimiter. The frame content is composed of a Frame_Header, Data_Field, and CRC. Unless otherwise specified, the term frame refers to a FC-2 frame in this standard.

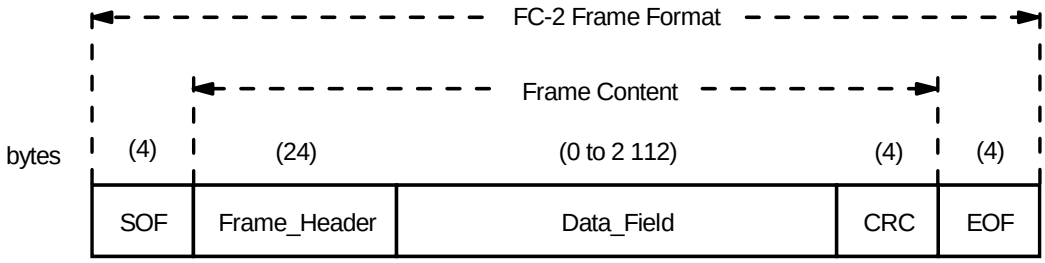


**Figure 11 - FC-2 frame format**

## 8.2 Frame transmission

Frame transmission shall be performed by inserting a frame immediately following a series of Idles. Idles shall be transmitted immediately upon completion of the frame. A minimum of two Idle words shall be transmitted consecutively following the EOF word of each frame transmitted by any FC_Port transmitter.

If an FC_Port transmitter is repeating the Transmission Word stream of a receiver that is not capable of exercising buffer-to-buffer flow control (e.g., L_Ports with REPEAT true, switch ports with a Class 1 connection open), the transmitter may insert or remove Idle words from the Transmission Word stream in order to adjust for timing skew between the receiver and transmitter; however, it shall retain at least two Idle words consecutively following each EOF.

If an FC_Port transmitter is repeating the Transmission Word stream of a receiver that is capable of exercising buffer-to-buffer flow control, the FC_Port shall transmit at least six primitive signals between each EOF and the next SOF. Of the six or more primitive signals transmitted, at least four shall be Idle words.

If an FC_Port transmitter is not repeating the Transmission Word stream of a receiver, the FC_Port shall transmit at least six primitive signals between each EOF and the next SOF. Of the six or more primitive signals transmitted, at least four shall be Idle words.

See [2], FC-AL-2 for Arbitrated Loop specific frame transmission requirements. See 8.9 for frame reception requirements.

## 8.3 Start-of-Frame (SOF) delimiter

### 8.3.1 Introduction

The Start-of-Frame (SOF) delimiter is an Ordered Set that immediately precedes the frame content. There are multiple SOF delimiters defined for Sequence control. The SOF delimiter shall be transmitted on a word boundary. Tables 42 and 46, respectively, specify allowable delimiters by class for Data and Link_Control frames. The bit encodings for the SOF delimiters are defined in table 9. SOFx is used to represent any SOF.

--`,,```,,,,````-`-`,,`,,`,`,,`---

Copyright International Organization for Standardization
Provided by IHS under license with ISO
No reproduction or networking permitted without license from IHS Not for Resale

### 8.3.2 SOF Connect Class 1 or 6 (SOFc1)

SOFc1 shall be used to request a Class 1 or Class 6 dedicated connection. The frame Data Field size is limited to the maximum size specified, during Login, by the destination Nx_Port or by the Fabric, if present, whichever size is smaller. This delimiter also identifies the first frame of a Sequence (i.e., implicit SOFi1).

### 8.3.3 SOF Circuit Activate Class 4 (SOFc4)

The SOFc4 shall be used to activate a Class 4 circuit. This delimiter shall also identify the first frame of a Sequence (i.e., implicit SOFi4).

### 8.3.4 SOF Initiate (SOFix)

#### 8.3.4.1 Applicability

A Sequence shall be initiated and identified by using SOFi1, SOFi2, SOFi3, or SOFi4 in the first frame. SOFix is used to represent these four SOF delimiters.

#### 8.3.4.2 SOF Initiate Class 1 or 6 (SOFi1)

The first Sequence of a Dedicated Connection is initiated with SOFc1. After a Class 1 or Class 6 Dedicated Connection is established, all subsequent Sequences within that Dedicated Connection shall be initiated with SOFi1.

#### 8.3.4.3 SOF Initiate Class 2 (SOFi2)

The SOFi2 shall be used on the first frame of a Sequence for Class 2 Service.

#### 8.3.4.4 SOF Initiate Class 3 (SOFi3)

The SOFi3 shall be used on the first frame of a Sequence for Class 3 Service.

#### 8.3.4.5 SOF Initiate Class 4 (SOFi4)

A Class 4 circuit shall be activated with SOFc4. After a Class 4 circuit is established, all subsequent Sequences within that Virtual Connection shall be activated with SOFi4. The SOFi4 shall be used in the first frame of a Sequence for Class 4 Service.

### 8.3.5 SOF Normal (SOFnx)

#### 8.3.5.1 Applicability

The following delimiters identify the start of all frames other than the first frame of a Sequence based on class of service. SOFnx is used to indicate SOFn1, SOFn2, SOFn3 and SOFn4.

#### 8.3.5.2 SOF Normal Class 1 or 6 (SOFn1)

The SOFn1 shall be used for all frames except the first frame of a Sequence for Class 1 or Class 6 Service.

#### 8.3.5.3 SOF Normal Class 2 (SOFn2)

The SOFn2 shall be used for all frames except the first frame of a Sequence for Class 2 Service.

#### 8.3.5.4 SOF Normal Class 3 (SOFn3)

The SOFn3 shall be used for all frames except the first frame of a Sequence for Class 3 Service.

--`,,```,,,,````-`-`,,`,,`,`,,`---

Copyright International Organization for Standardization
Provided by IHS under license with ISO
No reproduction or networking permitted without license from IHS Not for Resale

#### 8.3.5.5 SOF Normal Class 4 (SOFn4)

The SOFn4 shall be used for all frames except the first frame of a Sequence for Class 4 Service.

#### 8.3.6 SOF Fabric (SOFf)

If an Nx_Port or Fx_Port receives a Class F frame, indicated by an SOF**f** delimiter, it shall be discarded by the Nx_Port or Fx_Port. The receiving Nx_Port or Fx_Port may send an R_RDY.

NOTE Sending an R_RDY for a Class F frame is optional for a port not internal to the Fabric (i.e., an Nx_Port or non-switch internal port). This allows backwards compatibility with existing implementations. New Implementations should send an R_RDY for class F frames.

## 8.4 Frame_Header

The Frame_Header shall be the first field of the frame content and shall immediately follow the SOF delimiter for all frames. The Frame_Header shall be transmitted on a word boundary. The Frame_Header is used by the LCF to control link operations, control device protocol transfers, and detect missing or out of order frames. The Frame_Header is defined in clause 9.

## 8.5 Data Field

The Data Field shall follow the Frame_Header. Data Fields shall be aligned on word boundaries and shall be equal to a multiple of four bytes in length (including zero length). Two frame types are defined based on the value of bits 31 to 28 in the R_CTL field of the Frame_Header.

The two frame types are:

a) FT_0 (Data Field = 0 bytes)

   When the R_CTL field bits 31 to 28 are set to ’1100’ b, a FT_0 frame (Link_Control) shall be specified with a Data Field length of zero.

b) FT_1 (Data Field = 0 to 2 112 bytes)

   When the R_CTL field bits 31 to 28 are set to values other than ’1100’ b, a FT_1 frame (Data frame) shall be specified whose Data Field size is a multiple of four bytes and ranges in size from 0 to 2 112 bytes. If the ULP supplies a Payload that is not divisible by 4, the remaining bytes (up to 3) shall contain fill bytes as specified in the F_CTL field in table 31. However, fill bytes shall only be meaningful, and recognized as present, on the last Data frame of a series of consecutive Data frames of a single Information Category within a single Sequence.

   The Data Field in FT_1 frames may contain optional headers, as defined by the DF_CTL field, as well as the Payload. Optional Data Field headers are described in Clause 10.

A discussion of FT_0 (Link_Control) and FT_1 (Data) frames is found in 11.2 and 11.1, respectively.

## 8.6 CRC

The Cyclic Redundancy Check (CRC) is a four byte field that shall immediately follow the Data Field and shall be used to verify the data integrity of the Frame_Header and Data Field. SOF and EOF delimiters shall not be included in the CRC verification. The CRC field shall be calculated on the Frame_Header and Data Field prior to encoding for transmission and after decoding upon reception. The CRC field shall be aligned on a word boundary.

For the purpose of CRC computation, the bit of the word-aligned, four-byte field that corresponds to the first bit

--`,,```,,,,````-`-`,,`,,`,`,,`---

Copyright International Organization for Standardization
Provided by IHS under license with ISO
No reproduction or networking permitted without license from IHS Not for Resale

transmitted is the highest order bit (See Figure A.1). For transmission order see 5.3.2.

The CRC specified in this standard follows the CRC specified in Fibre Distributed Data Interface (FDDI) – Media Access Control (MAC) (See [3]). See Annex A for further discussions of the CRC. The CRC shall use the following 32-bit polynomial:

$X^{32} + X^{26} + X^{23} + X^{22} + X^{16} + X^{12} + X^{11} + X^{10} + X^8 + X^7 + X^5 + X^4 + X^2 + X + 1$

## 8.7 End-of-Frame (EOF) delimiter

### 8.7.1 Introduction

The End-of-Frame (EOF) delimiter is an Ordered Set that immediately follows the CRC and shall be transmitted on a word boundary. The EOF delimiter shall designate the end of the frame content and shall be followed by Idles. Tables 42 and 46, respectively, specify allowable delimiters by class for Data and Link_Control frames. There are three categories of EOF delimiters:

a) The first category shall indicate that the frame is valid from the sender's perspective and potentially valid from the receiver's perspective.
b) The second category ($EOF_{dti}$, $EOF_{rti}$, and $EOF_{ni}$) shall indicate that the frame content is invalid. This category shall only be used by an Fx_Port that receives a complete frame and decodes it before forwarding it.
c) The third category ($EOF_a$) shall indicate the frame content is corrupted and the frame was truncated during transmission. The third category shall be used by FC_Ports to indicate an internal malfunction (e.g., a transmitter failure that does not allow the entire frame to be transmitted normally).

The bit encodings for the EOF delimiters are defined in table 9.

All frames other than the last frame of a Sequence shall be terminated with an $EOF_n$ delimiter.

Each Sequence other than a Sequence that deactivates or removes a Class 1, Class 4 or Class 6 circuit shall terminate with an $EOF_t$ delimiter. Use of EOFs that deactivate or remove a Class 1, Class 4, or Class 6 circuit is described in clause 13.

If an Fx_Port detects a frame error, the Fx_Port shall replace either an $EOF_n$ or an $EOF_t$ of the frame in error with the $EOF_{ni}$ delimiter.

$EOF_x$ is used to represent any EOF.

### 8.7.2 Valid frame content

#### 8.7.2.1 EOF Normal ($EOF_n$)

The $EOF_n$ shall identify the end of frame when one of the other EOF delimiters indicating valid frame content is not required.

#### 8.7.2.2 EOF Terminate ($EOF_t$)

The $EOF_t$ shall indicate that the Sequence associated with this SEQ_ID is complete. $EOF_t$ or $EOF_{dt}$ shall be used to properly close a Sequence without error.

#### 8.7.2.3 EOF Disconnect Terminate ($EOF_{dt}$) (Class 1 or Class 6)

The $EOF_{dt}$ shall remove a dedicated connection through a Fabric, if present. The $EOF_{dt}$ shall also identify the last ACK of a Sequence and indicate that all Class 1 or Class 6 Sequences associated with this S_ID are terminated. Open Class 1 or Class 6 Sequences, other than the SEQ_ID specified in the frame containing $EOF_{dt}$, shall be

Copyright International Organization for Standardization
Provided by IHS under license with ISO
No reproduction or networking permitted without license from IHS Not for Resale

abnormally terminated and may require Sequence recovery on a ULP protocol-dependent basis.

#### 8.7.2.4 EOF Deactivate Terminate (EOFdt) (Class 4)

The EOFdt shall identify the last ACK frame of a Sequence or may be sent on an END Link_Control frame. It shall indicate that all Class 4 Sequences associated with this Class 4 circuit are terminated. Open Class 4 Sequences for this Class 4 circuit, other than the SEQ_ID specified in the ACK frame containing EOFrt, shall be abnormally terminated and may require Sequence recovery on a ULP protocol-dependent basis. The receipt of an EOFdt delimiter deactivates a class 4 connection.

#### 8.7.2.5 EOF Remove Terminate (EOFrt)

The EOFrt delimiter shall remove the Class 4 circuit.

The EOFrt shall identify the last ACK frame of a Sequence or may be sent on an END Link_Control frame. It shall indicate that all Class 4 Sequences associated with this Class 4 circuit are terminated. Open Class 4 Sequences for this Class 4 circuit, other than the SEQ_ID specified in the ACK frame containing EOFrt, shall be abnormally terminated and may require Sequence recovery on a ULP protocol-dependent basis.

### 8.7.3 Invalid frame content

#### 8.7.3.1 General

There are five EOF delimiters that indicate that the frame content is invalid. If a frame is received by a facility internal to a Fabric and an error is detected within the frame content, the frame may be forwarded with a modified EOF to indicate that an error was previously detected. Error detection in the frame content by the Fabric is optional.

Errors such as code violation or CRC errors are examples of detectable frame errors (e.g., if the Fabric decodes a frame into bytes and is unable to validly decoded one or more Transmission Characters into bytes, these bytes shall be filled with valid data bytes, a new CRC shall not be generated, and the appropriate EOF delimiter shall replace the original EOF delimiter).

When a frame is received with an EOF delimiter that indicates the frame content is invalid, the invalid frame condition shall be reported by the entity that replaces the EOF delimiter that indicates invalid frame content. The destination Nx_Port, at its discretion, may report the event of receiving a frame with one of these delimiters.

Errors are counted at the point where they are detected. Events may also be reported at the point where they are recognized.

NOTE Due to the importance of the EOFdt delimiter in Class 1 and Class 6, it is recommended that the Fabric forward a frame that has either EOFdt or EOFdti.

#### 8.7.3.2 End of Frame Abort (EOFa)

The EOFa shall terminate a partial frame due to a malfunction in a link facility during transmission. The frame shall end on a word boundary and shall be discarded by the receiver without transmitting a reply. If the transmitter retransmits the aborted frame, it shall transmit the frame with the same SEQ_CNT.

An invalid EOF (EOFdti, EOFrti or EOFni) delimiter may be changed to an EOFa delimiter under the conditions specified for EOFa.

EOFa delimiters shall not be changed to an invalid EOF delimiter under any conditions.

It is also used by the Fabric to replace missing EOF delimiters or to truncate over length frames.

Copyright International Organization for Standardization
Provided by IHS under license with ISO
No reproduction or networking permitted without license from IHS Not for Resale

#### 8.7.3.3 EOF Disconnect Terminate Invalid (EOF$_{dti}$) (Class 1 and Class 6)

The EOF$_{dti}$ shall replace a recognized EOF$_{dt}$ delimiter on a frame with invalid frame content. The EOF$_{dti}$ shall remove a dedicated connection through a Fabric, if present. It shall also indicate that all Class 1 and Class 6 Open Sequences associated with the Connected Nx_Port are abnormally terminated and may require Sequence recovery on a ULP protocol-dependent basis.

The frame containing the EOF$_{dti}$ shall be processed by the receiver in the following manner:

a) no response frame shall be transmitted
b) the Data Field may be used at the receiver's discretion (see 8.9.3)
c) the dedicated connection to the receiver is removed.

#### 8.7.3.4 EOF Deactivate Terminate Invalid (EOF$_{dti}$) (Class 4)

The EOFdti delimiter shall replace a recognized EOF$_{dt}$ delimiter on a frame with invalid frame content.

All other actions for an EOF$_{dti}$ shall be the same as for an EOF$_{dt}$ delimiter (see 8.7.2.4).

#### 8.7.3.5 EOF Remove Terminate Invalid (EOF$_{rti}$)

The EOF$_{rti}$ delimiter shall replace a recognized EOF$_{rt}$ delimiter on a frame with invalid frame content.

All other actions for an EOF$_{rti}$ shall be the same as for an EOF$_{rt}$ delimiter (see 8.7.2.5).

#### 8.7.3.6 EOF Invalid (EOF$_{ni}$)

The EOF$_{ni}$ shall replace an EOF$_{n}$ or EOF$_{t,}$ indicating that the frame content is invalid.

The receiver shall process the frame containing the EOF$_{ni}$ in the following manner:

a) no response frame shall be transmitted
b) the Data Field may be used at the receiver's discretion (see 8.9.3)

## 8.8 Frame field order

The frame content shall be transmitted sequentially following the SOF delimiter as an ordered byte stream within the definition of the frame as specified in figure 11, table 13, and figure 13 until the EOF delimiter is transmitted.

Table 13 relates the frame format to the ordered byte stream transferred from the Upper Level Protocol (or FC-4) and transmitted onto a link.

A frame shall be transmitted in the following byte order:

A0, A1, A2, A3, B0, B1, B2, B3, B4 ...

B32, B33, B34, B35, C0, C1, C2, C3.

Copyright International Organization for Standardization
Provided by IHS under license with ISO
No reproduction or networking permitted without license from IHS Not for Resale

**Table 13 - Frame byte order**

| Bits / Word | 31 .. 24 | 23 .. 16 | 15 .. 08 | 07 .. 00 |
|---|---|---|---|---|
| **SOF** | K28.5<br>A0 | Dxx.x<br>A1 | Dxx.x<br>A2 | Dxx.x<br>A3 |
| **0** | R_CNTL | D_ID | | |
| | B0 | B1 | B2 | B3 |
| **1** | CS_CTL | S_ID | | |
| | B4 | B5 | B6 | B7 |
| **2** | TYPE | F_CTL | | |
| | B8 | B9 | B10 | B11 |
| **3** | SEQ_ID | DF_CTL | SEQ_CNT | |
| | B12 | B13 | B14 | B15 |
| **4** | OX_ID | | RX_ID | |
| | B16 | B17 | B18 | B19 |
| **5** | Parameter | | | |
| | B20 | B21 | B22 | B23 |
| **6** | Data Field | | | |
| | B24 | B25 | B26 | B27 |
| **7** | Data Field | | | |
| | B28 | B29 | B30 | B31 |
| **n to 1** | CRC | | | |
| | B32 | B33 | B34 | B35 |
| **EOF** | K28.5<br>C0 | Dxx.x<br>C1 | Dxx.x<br>C2 | Dxx.x<br>C3 |

If there is one-byte of fill in the Data Field of this frame, the fill byte is B31. With no optional header present, the relative offset (Parameter Field) shall be specified as follows:

a) relative offset + 0 specifies B24;
b) relative offset + 3 specifies B27; and
c) relative offset + 4 specifies B28.

For a relative offset of decimal 1024 (hex ’00 00 04 00’) the Parameter Field shall be specified as:

B20, B21, B22, B23 = hex ’00 00 04 00’ (See figures A.1 and A.2).

--`,,```,,,,````-`-`,,`,,`,`,,`---

Copyright International Organization for Standardization
Provided by IHS under license with ISO
No reproduction or networking permitted without license from IHS Not for Resale

## 8.9 Frame reception

### 8.9.1 Rules

The following list specifies frame reception rules:

a) Data bytes received outside the scope of a delimiter pair (SOF and EOF) shall be discarded.
b) Frame reception shall be started by recognition of a SOF delimiter.
c) Detection of a code violation after frame reception is started but before frame reception is terminated shall be identified as an invalid Transmission Word within the frame.
d) Frame reception shall continue until an Ordered Set, or a Link Failure is detected.
e) If the frame content between the SOF and EOF delimiters exceeds the maximum allowable Data Field size as specified by Login, an Nx_Port may consider the frame invalid and discard Data Field bytes as received. However, an Ordered Set or Link Failure shall still terminate frame reception. An Nx_Port is also allowed to receive the frame and if valid, it shall respond with a P_RJT with a length error indicated in the reason code.
f) In either process or discard policy, if an $EOF_a$ terminates frame reception, the entire frame shall be discarded, including the Frame_Header and Data Field.
g) If an $EOF_{dt}$ or $EOF_{dti}$ terminates frame reception, a pending or existing Class 1 dedicated connection shall be recognized to be removed without regard to frame validity. If the frame is in Class 4 and the Class 4 circuit is in the Live State, the Class 4 circuit shall make the transition to the Dormant State.
h) If an EOFrt or EOFrti terminates frame reception, the Class 4 circuit shall be removed.

### 8.9.2 Frame validity

The following list of items determines whether a frame is considered valid or invalid.

a) If the Ordered Set terminating frame reception is not recognized as an EOF delimiter, the frame shall be considered invalid.
b) If the EOF delimiter is $EOF_{ni}$, $EOF_{dti}$, $EOF_{rti}$ or $EOF_a$, the frame shall be considered invalid.
c) If the Frame_Content between the SOF and EOF delimiters is not a multiple of four bytes, the frame shall be considered invalid.
d) If the EOF delimiter is $EOF_n$, $EOF_t$, $EOF_{dt}$ or $EOF_{rt}$ and no invalid Transmission Words have been detected during frame reception for a frame with a multiple of four byte words, the CRC field shall be used. If the CRC is valid, the frame shall be considered valid and normal processing for valid frames shall be performed. If the CRC is invalid, the frame shall be considered invalid.

During normal processing of valid frames, errors may be detected that are rejectable in Class 1, 2, 4 and 6 using the P_RJT Link_Response frame (see 11.2.3.4). P_RJT frames shall not be transmitted for invalid frames. If a rejectable error condition or a busy condition is detected for a valid Class 3 frame, the frame shall be discarded.

When errors (e.g., invalid Transmission Word and invalid CRC) are detected, the event count in the Link Error Status Block shall be updated (see 21.8). If delimiter usage does not follow allowable delimiters by class as specified in tables 42 and 46, a valid frame shall be considered rejectable.

### 8.9.3 Invalid frame processing

If an Nx_Port is able to determine that an invalid frame is associated with an Exchange that is designated as operating under Process policy, the Nx_Port may process and use the Data Field at its discretion, otherwise, the entire invalid frame shall be discarded.

When a frame is corrupted, it is not known if the Frame_Header is correct. The X_IDs, SEQ_ID, SEQ_CNT, and Parameter fields may not contain reliable information. The error may cause a misrouted frame to have a D_ID that appears to be correct. Such a frame may be used under very restricted conditions.

Copyright International Organization for Standardization
Provided by IHS under license with ISO
No reproduction or networking permitted without license from IHS Not for Resale

# 9 Frame_Header

## 9.1 Introduction

The Frame_Header shall be subdivided into fields as shown in table 14.

**Table 14 - Frame_Header**

| Bits / Word | 31 .. 24 | 23 .. 16 | 15 .. 08 | 07 .. 00 |
|---|---|---|---|---|
| **0** | R_CTL | D_ID | | |
| **1** | CS_CTL/Priority | S_ID | | |
| **2** | TYPE | F_CTL | | |
| **3** | SEQ_ID | DF_CTL | SEQ_CNT | |
| **4** | OX_ID | | RX_ID | |
| **5** | Parameter | | | |

The Frame_Header shall be the first field of the frame content and immediately follow the SOF delimiter and shall be transmitted on a word boundary. The Frame_Header is used to control link operations and device protocol transfers as well as detect missing or out of order frames.

## 9.2 Identification

### 9.2.1 Frame identification

D_ID, S_ID, SEQ_ID, SEQ_CNT, and Sequence Context (see 9.7) uniquely identify a single frame. The OX_ID and RX_ID fields (collectively defined as X_ID) may be used by a Sequence Initiator or Recipient Nx_Port to provide a locally assigned value that may be used in place of S_ID, D_ID, and SEQ_ID to identify frames in a non-streamed Sequence or when only one Sequence is open. When Sequences are streamed, or more than one Sequence is open, the X_ID field may be used in place of the S_ID and D_ID to identify the Sequence Initiator and Recipient Nx_Ports associated with a specific frame. The X_ID field may also be used in conjunction with S_ID, D_ID, or SEQ_ID to relate one or more Sequences to actions initiated by Upper Level Protocols.

When one or more Sequences are aborted using the Abort Sequence Protocol (see 21.7.2.2), a Recovery_Qualifier range is identified by the Sequence Recipient that consists of S_ID, D_ID, OX_ID and RX_ID in combination with a range of SEQ_CNT values (low and high). In Class 2 and 3, the Recovery_Qualifier range shall be used by the Sequence Initiator to discard ACK and Link_Response frames and by the Sequence Recipient to discard Data frames. If a Recovery_Qualifier is used in Class 2 or 3, a Reinstate Recovery Qualifier Link Service request shall be performed after an R_A_TOV timeout period has expired (see 12.3.2.14).

### 9.2.2 Sequence identification

The set of IDs defined previously (S_ID, D_ID, OX_ID, RX_ID, and SEQ_ID) is referred to as the Sequence_Qualifier throughout the remainder of this standard. An Nx_Port implementation makes use of these IDs in an implementation-dependent manner to uniquely identify open Sequences (see 17.6.1).

NOTE An Nx_Port's freedom to assign a SEQ_ID is based on Sequence Context (Initiator or Recipient). This may affect how an Nx_Port implementation chooses to uniquely identify Sequences.

A given Sequence Initiator Nx_Port may choose to provide frame tracking outside of the signalling protocol of this standard (FC-2). Setting the OX_ID to hex 'FF FF' indicates this. This implies that the Exchange Originator shall

--`,,```,,,,````-`-`,,`,,`,`,,`---

Copyright International Organization for Standardization
Provided by IHS under license with ISO
No reproduction or networking permitted without license from IHS Not for Resale

only have one Exchange active with a given destination Nx_Port. If an Nx_Port chooses an alternative frame tracking mechanism outside the scope of FC-2, it is still responsible for providing proper SEQ_ID and SEQ_CNT values. In addition, it shall return the RX_ID assigned by the Responder.

A given Nx_Port Responder may choose to provide frame tracking outside of the signalling protocol of this standard (FC-2). Setting the RX_ID to hex 'FF FF' indicates this. If an Nx_Port chooses an alternative frame tracking mechanism outside the scope of FC-2, it is still responsible for providing proper SEQ_ID and SEQ_CNT values. In addition, it shall return the OX_ID assigned by the Originator.

## 9.3 Routing Control (R_CTL)

### 9.3.1 Introduction

The R_CTL field is a one-byte field in Word 0 Bits 31 to 24 that contains routing bits and information bits to categorize the frame function. When the R_CTL field is used in combination with the TYPE field (Word 2, bits 31 to 24), it provides an FC_Port with assistance in frame routing, data routing, or addressing.

The R_CTL field is further subdivided into the ROUTING field (bits 31 to 28) and the INFORMATION field (bits 27 to 24).

### 9.3.2 ROUTING Field

Table 15 shows the frame types associated with the ROUTING field.

**Table 15 - R_CTL - Type Code Summary**

| R_CTL | | Frame type |
|---|---|---|
| **ROUTING** | **INFORMATION** | |
| '0000'b | (see table 16) | Device_Data frames (see clause 11) |
| '0010'b | (see table 61) | Extended Link Services (see 12.3) |
| '0011'b | (see table 18) | FC-4 Link_Data (see 9.3.3) |
| '0100'b | (see table 19) | Video_Data (see 9.3.3) |
| '1000'b | (see table 55) | Basic Link Services (see 12.2) |
| '1100'b | (see table 45) | Link_Control Frame (see 11.2) |
| '1111'b | (see table 20) | Extended Routing (see 9.3.3) |
| Others | Reserved | Reserved |

### 9.3.3 INFORMATION Field

The INFORMATION field is included in R_CTL to assist the receiver of a Data frame in directing the Data Field content to the appropriate buffer pool.

The R_CTL field for Device_Data frames shall be set according to table 16.

--`,,```,,,,````-`-`,,`,,`,`,,`---

Copyright International Organization for Standardization
Provided by IHS under license with ISO
No reproduction or networking permitted without license from IHS Not for Resale

**Table 16 - Device_Data Information Categories**

| R-CTL | | Description |
|---|---|---|
| ROUTING | INFORMATION | |
| '0000' b | '0000' b | Uncategorized information |
| | '0001' b | Solicited Data |
| | '0010' b | Unsolicited Control |
| | '0011' b | Solicited Control |
| | '0100' b | Unsolicited Data |
| | '0101' b | Data Descriptor |
| | '0110' b | Unsolicited Command |
| | '0111' b | Command Status |
| | Others | Reserved |

The INFORMATION field value of "Uncategorized information", does not offer assistance in routing.

When the ROUTING field is ’0000’b and the INFORMATION field is ’0101’b, the Data Descriptor is formatted as shown in table 17.

**Table 17 - Data Descriptor Payload**

| Item | Size-Bytes |
|---|---|
| Offset of data being transferred | 4 |
| Length of data being transferred | 4 |
| Reserved | 4 |
| Other optional information (FC-4 dependent) | max |

The R_CTL field for FC-4 Link_Data frames shall be set according to table 18.

**Table 18 - FC-4 Link_Data Information Categories**

| R-CTL | | Description |
|---|---|---|
| ROUTING | INFORMATION | |
| '0011' b | '0000' b | Uncategorized information |
| | '0001' b | Solicited Data |
| | '0010' b | Unsolicited Control |
| | '0011' b | Solicited Control |
| | '0100' b | Unsolicited Data |
| | '0101' b | Data Descriptor |
| | '0110' b | Unsolicited Command |
| | '0111' b | Command Status |
| | Others | Reserved |

Copyright International Organization for Standardization
Provided by IHS under license with ISO
No reproduction or networking permitted without license from IHS Not for Resale

The R_CTL field for Video_Data frames shall be set according to table 19.

**Table 19 - Video_Data Information Categories**

| R_CTL | | Description |
|---|---|---|
| ROUTING | INFORMATION | |
| '0100' b | '0100' b | Unsolicited Data |
| | Others | Reserved |

The R_CTL field for Extended Routing frames shall be set according to table 20.

**Table 20 - Extended Routing Information Categories**

| R_CTL | | Description |
|---|---|---|
| ROUTING | INFORMATION | |
| '1111' b | '0000' b | Vendor Unique |
| | Others | Reserved |

## 9.4 Address identifiers (D_ID, S_ID)

### 9.4.1 General

Each Nx_Port shall have a native N_Port_ID that is unique within the address domain of a Fabric. In addition, an Nx_Port may optionally have one or more Alias_IDs that may be shared across multiple Nx_Ports (e.g., Alias addressing may be used to implement a Hunt Group).

An N_Port_ID of binary zeros indicates that an Nx_Port is unidentified. When an Nx_Port completes the Link Initialization (see 7.6.2) Primitive Sequence protocol, its N_Port_ID shall be unidentified. While an Nx_Port is unidentified, it shall

a) accept all frames with any D_ID value,
b) not Reject (P_RJT) any frames with a reason code of “Invalid D_ID”, and
c) Reject (P_RJT) frames other than Basic and Extended Link Service with a reason code of “Login required”.

An Nx_Port determines its N_Port_ID by performing the Login Procedure as specified in clause 15. During the Login Procedure, an Nx_Port may be assigned an N_Port_ID or it may determine its own N_Port_ID.

### 9.4.2 Reserved address identifiers

Address identifiers in the range of hex ’FF FC 01’ to hex ’FF FC FE’ are reserved for Domain Controllers. Address identifiers in the range of hex ’FF FF F0’ to hex ’FF FF FE’ are reserved for well-known addresses. The address identifier of hex 'FF FF FF' is reserved as a broadcast address. See table 21 for the complete list.

### 9.4.3 Destination_ID (D_ID)

The D_ID is a three-byte field (Word 0, Bits 23 to 0) that shall contain the address identifier of the destination Nx_Port.

### 9.4.4 Source_ID (S_ID)

The S_ID is a three-byte field (Word 1, Bits 23 to 0) that shall contain the address identifier of the source Nx_Port.

--`,,```,,,,````-`-`,,`,,`,`,,`---

Copyright International Organization for Standardization
Provided by IHS under license with ISO
No reproduction or networking permitted without license from IHS Not for Resale

.

**Table 21 - Domain Controller and Well-known address identifiers**

| Address Value | Description |
|---|---|
| hex ’FF FC 01 to hex ’FF FC FE’ | Reserved for Domain Controllers |
| hex ’FF FF F0’ to hex ’FF FF F4’ | Reserved |
| hex ’FF FF F5’ | Multicast Server (see 23.3.4) |
| hex ’FF FF F6’ | Clock Synchronization Server (see clause 27) |
| hex ’FF FF F7’ | Security Key Distribution Server (See [6], FC-GS-4) |
| hex ’FF FF F8’ | Alias Server (see 24.2) |
| hex ’FF FF F9’ | Quality of Service Facilitator - Class 4 (QoSF) (see 25.3.5.2) |
| hex ’FF FF FA’ | Management Server |
| hex ’FF FF FB’ | Time Server |
| hex ’FF FF FC’ | Directory Server |
| hex ’FF FF FD’ | Fabric Controller |
| hex ’FF FF FE’ | F_Port |
| hex ’FF FF FF’ | Broadcast Alias_ID (see 23.4) |

## 9.5 Class Specific Control (CS_CTL)/Priority

### 9.5.1 Introduction

The meaning of the CS_CTL field is controlled by the CS_CTL/Priority Enable bit (F_CTL, bit 17). When the CS_CTL/Priority Enable bit is set to zero, word 1, bits 31 to 24 shall be interpreted to be CS_CTL information as defined in 9.5.2. When the CS_CTL/Priority Enable bit is set to one, word 1, bits 31 to 24 shall be interpreted to be Priority information as described in 9.5.3.

### 9.5.2 CS_CTL

#### 9.5.2.1 General

When bit 17 of F_CTL is set to zero, Word 1, bits 31 to 24 of the Frame_Header is defined as the CS_CTL field. It contains management information for the class of service identified by the SOF. The meaning of the CS_CTL field is dependent on the class of service.

#### 9.5.2.2 Class 1 and Class 6

The CS_CTL field is defined in table 22 for Class 1. Stacked Connect-request shall be meaningful only in the connect-request frame.

Copyright International Organization for Standardization
Provided by IHS under license with ISO
No reproduction or networking permitted without license from IHS Not for Resale

**Table 22 - CS_CTL field - Class 1**

| Bit | Abbr. | Meaning |
|---|---|---|
| 31 | Simplex - obsolete | Reserved |
| 30 | Stacked Connect-request | 0 = Stacked Connect-request not requested<br>1 = Stacked Connect-request requested |
| 29 | COR - obsolete | Reserved |
| 28 | BCR - obsolete | Reserved |
| 27 to 24 | | Reserved |

#### 9.5.2.3 Class 2

The CS_CTL field is defined in table 23 for Class 2.

**Table 23 - CS_CTL field - Class 2**

| Bits | Abbr. | Meaning |
|---|---|---|
| 31 | PREF | 0 = Frame is delivered with no Preference<br>1 = Frame may be delivered with Preference |
| 30 | | Reserved for additional Preference function |
| 29 to 24 | DSCP | Differentiated Services Code Point |

PREF shall be meaningful in all Class 2 frames.

Bits 29 to 24 shall be define policies to differentiate traffic flows. The default value shall be '000000' b, that is defined as the best effort QoS. Other values are defined in [13], RFC 2597, Assured Forwarding PHB Group, and [14], RFC 2598, An Expedited Forwarding PHB. Values other than ’000000’ b and those defined in the referenced RFCs are reserved.

#### 9.5.2.4 Class 3

The CS_CTL field is defined in table 24 for Class 3.

**Table 24 - CS_CTL field - Class 3**

| Bit | Abbr. | Meaning |
|---|---|---|
| 31 | PREF | 0 = Frame is delivered with no Preference<br>1 = Frame may be delivered with Preference |
| 30 | | Reserved for additional Preference function |
| 29 to 24 | DSCP | Differentiated Services Code Point |

PREF shall be meaningful in all Class 3 frames.

Bits 29 to 24 shall be define policies to differentiate traffic flows. The default value shall be '000000' b, that is

--`,,```,,,,````-`-`,,`,,`,`,,`---

Copyright International Organization for Standardization
Provided by IHS under license with ISO
No reproduction or networking permitted without license from IHS Not for Resale

defined as the best effort QoS. Other values are defined in [13], RFC 2597, Assured Forwarding PHB Group, and [14], RFC 2598, An Expedited Forwarding PHB. Values other than ’000000’ b and those defined in the referenced RFCs are reserved.

#### 9.5.2.5 Class 4

The CS_CTL field is defined in table 25 for Class 4.

VC_ID shall be meaningful in all Class 4 frames.

**Table 25 - CS_CTL field - Class 4**

| Bit | Abbr. | Meaning |
|---|---|---|
| 31 to 24 | VC_ID | Virtual Circuit Identifier |

The Class 4 VC_ID field is a Class of Service specific use of the CS_CTL field. The VC_ID identifies from which VC the frame is associated, from the point of view of the S_ID in the frame header.

An unique VC is identified from S_ID || VC_ID in the frame header. During the Class 4 circuit setup process, the QoSF associates S_ID || VC_ID with a unique destination N_Port_ID value that is also identified in the QoSR. For each D_ID, the S_ID || VC_ID identifies the route for the VC through the Fabric. The association between VC_ID and S_ID shall be done for the CTI when the QoSR is recognized by the QoSF and for the CTR when it's LS_ACC is recognized by the QoSF.

VC_ID values are assigned as follows:

a) The value hex '00' is reserved.
b) The value in the VC_ID associated with a reserved VC shall be in the range of hex '01' through hex 'FE'.
c) The value hex 'FF' is reserved.

This assignment of VC_ID values permits a maximum of 254 Dormant or Live Class 4 circuits for each N_Port, shared between the N_Ports address identifier and any Alias_ID.

The Fabric uses the VC_ID field in the frame header to route frames to a destination N_Port. The N_Port during the Class 4 circuit setup process picks the VC_ID field value. Each N_Port picks its own VC_ID values.

The value in the field is either a CTI VC_ID (CIVC_ID) or a CTR VC_ID (CRVC_ID), depending on which N_Port is used to transmit the frame.

Permission to transmit frames is granted by a VC_RDY. Each N_Port has a VC_ID that identifies the VC for its half of the Class 4 circuit.

If a Data frame is transmitted in a Class 4 circuit, the VC_ID field shall contain the appropriate CIVC_ID or CRVC_ID value corresponding to the S_ID field in the same frame (see figure 12).

--`,,```,,,,````-`-`,,`,,`,`,,`---

Copyright International Organization for Standardization
Provided by IHS under license with ISO
No reproduction or networking permitted without license from IHS Not for Resale

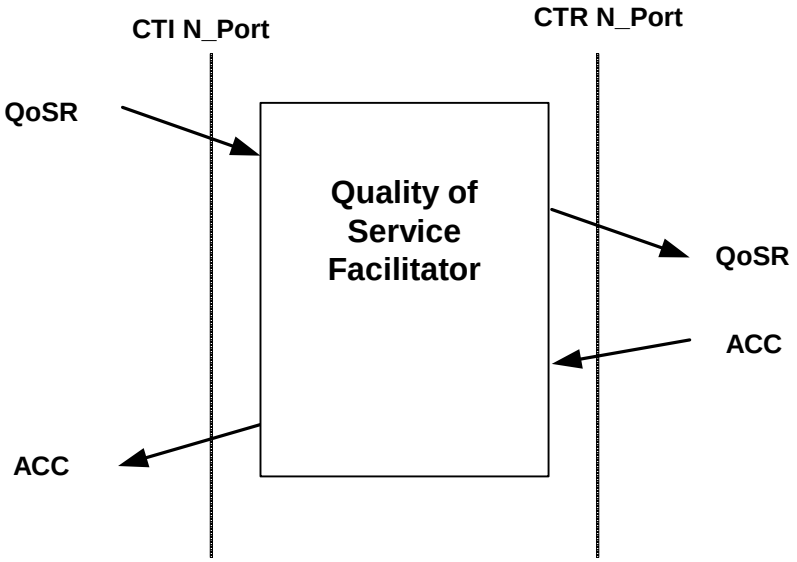


**Figure 12 - CIVC_ID and CRVC_ID management**

As shown in figure 12, in an ACK frame, the VC_ID field in the frame header is substituted with the VC_ID associated with the switched S_ID in the frame header (i.e., changed to the other VC_ID associated with the Class 4 circuit).

### 9.5.3 Priority

#### 9.5.3.1 Introduction

When supported by FC_Ports (see 15.6.5.4.5), the Priority field shall be used to resolve resource contention or to determine the order to deliver frames. The definition and use of the Priority field is class dependent.

Word 1, bits 31 to 24 of the Frame_Header shall be defined as the Priority field when the CS_CTL/Priority Enable bit (F_CTL, bit 17) is set to one. The Priority field contains priority information for the class of service identified by the SOF. A value of '0000000' b in word 1, bits 31 to 25 shall indicate that no Priority has been assigned to the frame. The remaining values shall indicate, in ascending order, the relative priority of the frame (e.g., a Priority of hex '23' shall be considered to have a lower priority than a Priority of hex '57'). The meaning of Word 1, bit 24 is dependent on the class of service.

#### 9.5.3.2 Class 1 and Class 6

The Priority field is defined in table 26 for Class 1 and 6.

**Table 26 - Priority Field - Class 1 and Class 6**

| Word 1, bit(s) | Meaning |
|---|---|
| 31 to 25 | Priority |
| 24 | 0 = No Preemption<br>1 = Preemption |

In Class 1 and Class 6, word 1, bits 31 to 25 shall be interpreted to be the priority value, and word 1, bit 24 shall be interpreted to be the preemption request flag.

Copyright International Organization for Standardization
Provided by IHS under license with ISO
No reproduction or networking permitted without license from IHS Not for Resale

The Priority for a dedicated connection shall be established by the Priority value provided by the SOFc1 frame. The Priority and Preemption flag shall have no meaning for frames other than SOFc1 frames.

When supported by an FC_Port, the Preemption flag shall be used to interrupt and remove a Class 1 or Class 6 Dedicated Connection between Nx_Ports and establish a new Class 1 or Class 6 Dedicated Connection. An Nx_Port sourcing a SOFc1 frame with the Preemption flag set initiates preemption. The Preemption flag in a SOFc1 frame shall not be meaningful when establishing a new Class 1 or Class 6 Dedicated Connection between unconnected Nx_Ports. Also, the preemption request flag has no meaning for frames other than a SOFc1 frame. See 20.1.3 for more information on Preempting a Dedicated Connection.

#### 9.5.3.3 Class 2 and Class 3

The Priority field is defined in table 27 for Class 2 and 3.

**Table 27 - Priority Field**

| Word 1, bit(s) | Meaning |
|---|---|
| 31 to 25 | Priority |
| 24 | 0 = No Preemption<br>1 = Preemption |

In Class 2 and Class 3, word 1, bits 31 to 25 shall be the priority value, and word 1, bit 24 shall be the preemption request flag. The priority for a sequence shall be established by the priority provided by the Sequence Initiator SOFi2 or SOFi3 frame. The Sequence Initiator should set the Priority to the same value for all frames in a given Sequence. Priority should only be set on the SOFi2 or SOFi3 frames. Changing priority in subsequent frames in a sequence may result in out of order delivery of data frames. However, priority does not in itself guarantee in order deliver. Both the Fabric and the Nx_Ports shall not be required to validate the consistency of the Priority Field throughout a Sequence.

When supported by an FC_Port, the Preemption flag shall be used to interrupt and remove a Class 1 or Class 6 Dedicated Connection between Nx_Ports and allow the forwarding of the Class 2 or Class 3 frame. An Nx_Port sourcing an SOFx2 or SOFx3 frame with the Preemption flag set initiates preemption. The Preemption flag in an SOFx2 or SOFx3 frame shall not be meaningful if the destination Nx_port(s) are unconnected. Also the Preemption flag has no meaning for frames other than a SOFx2 or SOFx3 frame. See 20.1.3 for more information on Preempting a Dedicated Connection.

The Sequence Initiator shall set the Priority to the same value for all frames in a given Sequence. Priority shall only be set on a SOFi2 or SOFi3 frame. Changing priority in subsequent frames in a sequence may result in out of order delivery of data frames. However, priority does not in itself guarantee in order delivery.

Both the Fabric and the Nx_Ports shall not be required to validate the constancy of the Priority Field throughout a Sequence.

When supported by an FC_Port, the Preemption flag shall be used to interrupt and remove a Class 1 or Class 6 Dedicated Connection between Nx_Ports and forward a Class 2 or Class 3 frame. An Nx_Port sourcing a SOFi2 or SOFi3 frame with the Preemption flag set initiates preemption. The Preemption flag in a SOFi2 or SOFi3 frame shall not be meaningful when forwarding a Class 2 or Class 3 frame to an unconnected Nx_Port. Also, the preemption request flag has no meaning for frames other than a SOFi2 or SOFi3 frame. See 20.1.3 for more information on Preempting a Dedicated Connection.

#### 9.5.3.4 Class 4

For Class 4, word 1, bits 31 to 24 of the Frame_Header shall be interpreted as the VC_ID as defined in 9.5.2.5.

--`,,```,,,,````-`-`,,`,,`,`,,`---

Copyright International Organization for Standardization
Provided by IHS under license with ISO
No reproduction or networking permitted without license from IHS Not for Resale

## 9.6 Data structure type (TYPE)

The data structure type (TYPE) is a one-byte field (Word 2, Bits 31 to 24) that shall identify the protocol of the frame content for Data frames.

When the Routing field (word 0, bits 31 to 28) indicates a Link_Control frame other than F_BSY, the TYPE field (word 0, bits 31 to 24) is reserved. F_BSY frames use the TYPE field to indicate a reason code for the F_BSY. When the F_BSY is in response to a Link_Control frame, the Information category field (word 0, bits 27 to 24) of the busied frame is copied by the Fabric into the TYPE field (word 2, bits 27 to 24). The bit encodings are shown in table 45.

NOTE Copying the Link_Control command code allows a source Nx_Port to easily retransmit the frame if it is busied by the Fabric (see 11.2.3.2).

When the Routing bits in R_CTL indicate Basic or Extended Link_Data, TYPE codes are decoded as shown in table 28.

**Table 28 - TYPE codes - Link Service**

| Encoded Value Word 2, bits 31 to 24 | Description |
|---|---|
| hex ’00’ | Basic Link Service |
| hex ’01’ | Extended Link Service |
| hex ’02’ to hex ’CF’ | Reserved |
| hex ’D0’ to hex ’FF’ | Vendor specific |

When the Routing bits in R_CTL indicate Video_Data, the TYPE codes are decoded as shown in table 29.

**Table 29 - TYPE codes - Video_Data**

| Encoded Value Word 2, bits 31 to 24 | Description |
|---|---|
| hex ’02’ to hex ’CF’ | Reserved |
| hex ’D0’ to hex ’FF’ | Vendor specific |

Copyright International Organization for Standardization
Provided by IHS under license with ISO
No reproduction or networking permitted without license from IHS Not for Resale

When the Routing bits in R_CTL indicate FC-4 Device_Data or FC-4 Link_Data TYPE codes are decoded as shown in table 30

**Table 30 - TYPE codes - FC-4 (Device_Data and Link_Data)**

| Encoded Value Word 2, bits 31 to 24 | Description |
|---|---|
| hex ’00’ to hex ’03’ | Reserved |
| hex ’04’ | ISO/IEC 8802-2 LLC/SNAP (in order) |
| hex ’05’ | IP over FC, RFC 2625 (See [12]) |
| hex ’06’ to hex ’07’ | Reserved |
| hex ’08’ | FCP-3 (See [9]) |
| hex ’09’ | SCSI - GPP |
| hex ’0A’ to hex ’0F’ | Reserved - SCSI |
| hex ’10’ | Reserved - IPI-3 |
| hex ’11’ | IPI-3 Master |
| hex ’12’ | IPI-3 Slave |
| hex ’13’ | IPI-3 Peer |
| hex ’14’ to hex ’17’ | Reserved |
| hex ’18’ | Reserved - SBCCS |
| hex ’19’ | SBCCS - Channel |
| hex ’1A’ | SBCCS - Control Unit |
| hex ’1B’ | FC-SB-3 Channel to Control Unit |
| hex ’1C’ | FC-SB-3 Control Unit to Channel |
| hex ’1D’ to hex ’1F’ | Reserved – FC-SB-3 |
| hex ’20’ | Fibre Channel Common Transport (FC-GS-4) |
| hex ’21’ | Reserved |
| hex ’22’ | Switch Fabric Internal Link Services (FC-SW-3) |
| hex ’23’ | FC-AL |
| hex ’24’ | SNMP |
| hex ’25’ to hex ’27’ | Reserved - Fabric Services |
| hex ’28’ to hex ’2F’ | Reserved |
| hex ’30’ to hex ’33’ | Reserved - Scalable Coherent Interface |
| hex ’34’ to hex ’3F’ | Reserved |

Copyright International Organization for Standardization
Provided by IHS under license with ISO
No reproduction or networking permitted without license from IHS Not for Resale

**Table 30 - TYPE codes - FC-4 (Device_Data and Link_Data) (Continued)**

| Encoded Value Word 2, bits 31 to 24 | Description |
|---|---|
| hex ’40’ | HIPPI-FP |
| hex ’41’ to hex ’47’ | Reserved - HIPPI |
| hex ’48’ | MIL-STD-1553 (FC-AE) |
| hex ’49’ | ASM (FC-AE) |
| hex ’4A’ to hex ’4F’ | Reserved for FC-AE |
| hex ’50’ to hex ’57’ | Reserved for future use by FC-BB |
| hex ’58’ | Virtual Interface (FC-VI) |
| hex ’59’ to hex ’5F’ | Reserved |
| hex ’60’ | FC-AV Container |
| hex ’61’ to hex ’63’ | Reserved - FC-AV |
| hex ’64’ to hex ’DE’ | Reserved |
| hex ’DF’ | Reserved for RNID uses |
| hex ’E0’ to hex ’FF’ | Vendor specific |

## 9.7 Frame Control (F_CTL)

### 9.7.1 Introduction

The Frame Control (F_CTL) field (Word 2, Bits 23 to 0) is a three-byte field that contains control information relating to the frame content. The following subclause describe the valid uses of the F_CTL bits. If an error in bit usage is detected, a reject frame (P_RJT) shall be transmitted in response with an appropriate reason code (see 11.2.3.4) for Classes 1, 2, 4 and 6. The format of the F_CTL bits are defined in table 31.

When a bit is designated as meaningful under a set of conditions, that bit shall be ignored if those conditions are not present (e.g., Bit 18 is only meaningful when bit 19 is set to one; this means that bit 18 shall be ignored unless bit 19 is set to one).

### 9.7.2 Exchange Context

An Exchange shall be started by the Originator LCF within an Nx_Port. The other Nx_Port of the Exchange shall be known as the Responder. If the Exchange Context bit (bit 23) is set to zero, the S_ID is associated with the

Copyright International Organization for Standardization
Provided by IHS under license with ISO
No reproduction or networking permitted without license from IHS Not for Resale

Exchange Originator. If the bit is set to one, the S_ID is associated with the Exchange Responder.

**Table 31 - Exchange/Sequence Control (F_CTL)**

| Control Field | Word 2, Bits | Description | Reference |
|---|---|---|---|
| Exchange Context | 23 | 0 = Originator of Exchange<br>1 = Responder of Exchange | See 17.4. |
| Sequence Context | 22 | 0 = Sequence Initiator<br>1 = Sequence Recipient | See 17.4 |
| First_Sequence | 21 | 0 = Sequence other than first of Exchange<br>1 = first Sequence of Exchange | See 17.4 |
| Last_Sequence | 20 | 0 = Sequence other than last of Exchange<br>1 = last Sequence of Exchange | See 17.7 |
| End_Sequence | 19 | 0 = Data frame other than last of Sequence<br>1 = last Data frame of Sequence | See 9.7.6 |
| End_Connection (Class 1or 6)<br>or<br>Deactivate Class 4 circuit | 18 | 0 = Connection active<br>1 = End of Connection Pending (Class 1 or 6)<br>End of Live Class 4 circuit | See 20.7.3<br>See clause 25 |
| CS_CTL/Priority Enable | 17 | 0 = Word 1, Bits 31 to 24 = CS_CTL<br>1 = Word 1, Bits 31 to 24 = Priority | See 9.5.2<br>See 9.5.3 |
| Sequence Initiative | 16 | 0 = hold Sequence initiative<br>1 = transfer Sequence initiative | See 17.6.3<br>See 17.6.4 |
| X_ID reassigned - Obsolete | 15 | | |
| Invalidate X_ID - Obsolete | 14 | | |
| ACK_Form | 13 to 12 | ’00’ b = No assistance provided<br>’01’ b = Ack_1 Required<br>’10’ b = reserved<br>’11’ b = Ack_0 Required | See 9.7 |
| Data Compression – Obsolete | 11 | | |

Copyright International Organization for Standardization
Provided by IHS under license with ISO
No reproduction or networking permitted without license from IHS Not for Resale

**Table 31 - Exchange/Sequence Control (F_CTL) (Continued)**

| Control Field | Word 2, Bits | Description | Reference |
|---|---|---|---|
| Data Encryption - Obsolete | 10 | | |
| Retransmitted Sequence | 9 | 0 = Original Sequence transmission<br>1 = Sequence retransmission | See 21.7.2.3 |
| Unidirectional Transmit (Class 1) or Remove Connection (Class 4 only) | 8 | 0 = Bi-directional transmission (Class 1)<br>1 = Unidirectional transmission (Class 1) | See 20.5.4 |
| | | 0 = Retain or deactivate circuit (Class 4)<br>1 = Remove circuit (Class 4) | See clause 25 |
| Continue Sequence Condition | 7 to 6 | Last Data frame - Sequence Initiator<br>'00' b = No information<br>'01' b = Sequence to follow-immediately<br>'10' b = Sequence to follow-soon<br>'11' b = Sequence to follow-delayed | See 17.6.5.6 |
| Abort Sequence Condition | 5 to 4 | ACK frame - Sequence Recipient<br>'00' b = Continue sequence<br>'01' b = Abort Sequence, Perform ABTS<br>'10' b = Stop Sequence<br>'11' b = Immediate Sequence retransmission requested | See 12.2.2 |
| | | Data frame (1st of Exchange) - Sequence Initiator<br>'00' b = Abort, Discard multiple Sequences<br>'01' b = Abort, Discard a single Sequence<br>'10' b = Process policy with infinite buffers<br>'11' b = Discard multiple Sequences with immediate retransmission | See 12.2.2 |
| Relative offset present | 3 | 0 = Parameter field defined for some frames<br>1 = Parameter Field = relative offset | See 9.13 |
| Exchange reassembly | 2 | Reserved for Exchange reassembly | See 9.7.16 |
| Fill Data Bytes | 1 to 0 | End of Data Field - bytes of fill<br>'00' b = 0 Bytes of fill<br>'01' b = 1 Byte of fill (last byte of Data Field)<br>'10' b = 2 Bytes of fill (last 2 bytes of Data Field)<br>'11' b = 3 Bytes of fill (last 3 bytes of Data Field) | See 9.7.17 |

### 9.7.3 Sequence Context

A Sequence shall be started by a Sequence Initiator facility within an Nx_Port. The destination FC_Port of the Sequence shall be known as the Sequence Recipient. If the Sequence Context (bit 22) bit is set to zero, it indicates that the S_ID is associated with the Sequence Initiator. If the bit is set to one, it indicates that the S_ID is associated with the Sequence Responder. This indicates the Sequence Context.

Knowledge of Sequence context is required for proper handling of Link_Control frames received in response to Data frame transmission in Class 2. When a Busy frame is received, it may be in response to a Data frame (Sequence Initiator) or to an ACK frame (Sequence Recipient). This bit simplifies the necessary constructs to

Copyright International Organization for Standardization
Provided by IHS under license with ISO
No reproduction or networking permitted without license from IHS Not for Resale

distinguish between the two cases.

### 9.7.4 First_Sequence

The First_Sequence bit (bit 21) shall be set to one on all frames in the First Sequence of an Exchange. It shall be set to zero for all other Sequences within an Exchange.

### 9.7.5 Last_Sequence

The Last_Sequence bit (bit 20) shall be set to one on the last Data frame in the Last Sequence of an Exchange. However, it may be set to one on a Data frame prior to the last frame. Once it is set to one, it shall be set to one on all subsequent Data frames in the last Sequence of an Exchange. It shall be set to zero for all other Sequences within an Exchange. This bit shall be set to the same value in the Link_Control frame as the Data frame to which it corresponds.

NOTE The early transition of this bit, unlike other F_CTL bits, is permitted as a hardware assist by providing an advance indication that the Sequence is nearing completion.

### 9.7.6 End_Sequence

The End_Sequence bit (bit 19) shall be set to one on the last Data frame of a Sequence. In Class 1 or Class 6, if this bit is set to one in the ACK corresponding to the last Data frame, it confirms that the Sequence Recipient recognized it as the last Data frame of the Sequence. In Class 2, the final ACK with this bit set to one confirms the end of the Sequence, however, the SEQ_CNT shall match the last Data frame delivered that may not be the last Data frame transmitted. This indication is used for Sequence termination by the two Nx_Ports involved in addition to $EOF_t$ or $EOF_{dt}$ (see 17.3.8). This bit shall be set to zero for all other frames within a Sequence.

### 9.7.7 End_Connection (E_C) (Class 1 or 6) or Deactivate Class 4 circuit

In Class 1 or Class 6, the E_C bit (bit 18) shall be set to one in the last Data frame of a Sequence to indicate that the Nx_Port transmitting E_C is beginning the disconnect procedure. The Nx_Port transmitting E_C set to one on the last Data frame of a Sequence is requesting the receiving Nx_Port transmit an ACK frame terminated by $EOF_{dt}$ if the receiving Nx_Port has complete the currently active Sequence. If the receiving Nx_Port is not able to transmit $EOF_{dt}$, E_C set to one requests that the receiving Nx_Port complete the currently active Sequence and not initiate any new Sequences during the current Connection.

The E_C bit is only applicable to Class 1, 4 and 6 and is only meaningful on the last Data frame of a Sequence. The E_C bit shall be set to zero on a Class 1 connect-request frame ($SOF_{c1}$) in order to avoid ambiguous error scenarios where the ACK ($EOF_{dt}$) is not properly returned to the Connection Initiator. See 20.7.3 for a discussion on removing dedicated connections (E_C bit).

In Class 4, the E_C bit shall be set to one in the last Data frame of a Sequence to indicate that the Nx_Port transmitting E_C is beginning the deactivation or removal procedure. The Nx_Port transmitting E_C set to one on the last Data frame of a Sequence is requesting the receiving Nx_Port to transmit an ACK frame terminated by $EOF_{dt}$, in the case of deactivation or $EOF_{rt}$ in the case of removal if the receiving Nx_Port has completed the currently active Sequence. If bit 8, Remove_Connection (R_C) is set to one in addition to E_C set to one, then a Class 4 circuit removal is requested, otherwise a deactivation is requested. If the receiving Nx_Port is not able to deactivate or remove the Class 4 circuit, E_C set to one requests that the receiving Nx_Port complete the currently active Sequence and not initiate any new Sequences during the current activation cycle.

### 9.7.8 CS_CTL/Priority Enable

When the CS_CTL/Priority Enable bit (bit 17) is set to zero, word 1, bits 31 to 24 of the Frame_Header shall be interpreted to be the CS_CTL field as described in 9.5.2. When CS_CTL/Priority Enable is set to one, word 1, bits 31 to 24 of the Frame_Header shall be interpreted to be the Priority field as described in 9.5.3.

In Class 1 and Class 6, CS_CTL/Priority Enable is meaningful only for the $SOF_{c1}$ frame. CS_CTL/Priority Enable

--`,,```,,,,````-`-`,,`,,`,`,,`---

Copyright International Organization for Standardization
Provided by IHS under license with ISO
No reproduction or networking permitted without license from IHS Not for Resale

shall be ignored for all subsequent frames in a Dedicated Connection.

In Class 2 and Class 3, the Sequence Initiator shall set CS_CTL/Priority Enable to the same value for all frames in a given Sequence. CS_CTL/Priority Enable shall only be modified on the initial Sequence SOFi2 or SOFi3 frame. Changing CS_CTL/Priority Enable in subsequent frames may result in out of order delivery of frames.

Both the Fabric and the Nx_Ports shall not be required to validate the constancy of CS_CTL/Priority Enable throughout a Sequence.

In Class 4, CS_CTL/Priority Enable shall be ignored. In Class 4 frames, bits 31 to 24 of word 1 are always VC_ID.

### 9.7.9 Sequence Initiative

The Originator of an Exchange shall initiate the first Sequence as the Sequence Initiator. If the Sequence Initiative bit (bit 16) is set to zero, the Sequence Initiator shall hold the initiative to continue transmitting Sequences for the duration of this Sequence Initiative. The Sequence Recipient gains the initiative to transmit a new Sequence for this Exchange after the Sequence Initiative has been transferred to the Recipient. This shall be accomplished by setting the Sequence Initiative bit to one in the last Data frame of a Sequence (End_Sequence set to one). In Class 1, 2, 4 and 6, the Sequence Initiator shall consider Sequence Initiative transferred when the ACK to the corresponding Data frame is received with the Sequence Initiative bit set to one. Setting bit 16 to one is only meaningful when End_Sequence is set to one.

### 9.7.10 ACK_Form

The ACK_Form bits (bits 13 to 12) provide an optional assistance to the Sequence Recipient by translating the ACK capability bits in the Nx_Port Class Service Login Parameters into an F_CTL field accompanying the frame to be acknowledged. ACK_Form is meaningful on all Class 1, 2, 4 or 6 Data frames of a Sequence and on all connect-request frames. ACK_Form is not meaningful on Class 1, 2, 4 or 6 Link_Control frames, or any Class 3 frames. The meaning of the ACK_Form bits is given in table 31.

### 9.7.11 Retransmitted Sequence

The Retransmitted Sequence bit (bit 9) is only meaningful in Class 1 and 6 and only if the Exchange Error Policy specified on the first Data frame of the Exchange by the Originator is specified as ’11’ b (Discard multiple Sequences with immediate retransmission). Retransmitted Sequence shall be set to one if the Sequence Initiator has received an ACK with the Abort Sequence Condition bits (F_CTL bits 5 to 4) set to one. Retransmitted Sequence shall be set to one in all frames of the retransmitted Sequence. If the Sequence Initiator is not able to determine that all Sequences are complete prior to the Sequence identified in the ACK with the Abort Sequence Condition bits set to one (i.e., missing final ACK), the Sequence Initiator shall not retransmit any Sequences until the successful reception of all previous Sequences has been verified using a Read Exchange Status (RES) ELS request (see 21.7.2.3).

### 9.7.12 Unidirectional Transmit or Remove_Connection

For Class 1, Unidirectional Transmit bit (bit 8) is meaningful on a connect-request ($SOF_{c1}$) in Class 1. If Unidirectional Transmit is set to zero, the dedicated connection is bi-directional. If a dedicated connection is bi-directional, the Connection Recipient may initiate Sequences immediately after the dedicated connection is established. If Unidirectional Transmit is set to one, the dedicated connection is unidirectional and only the Nx_Port that transmitted the connect-request that establishes the Connection shall transmit Data frames.

For Class 1 other than the connect-request, Unidirectional Transmit is meaningful on the first and last Data frames of a Sequence. After the connect-request with Unidirectional Transmit set to one, the Connection Initiator may set Unidirectional Transmit to zero making the Connection bi-directional for the duration of the Connection on the first or last Data frames of a Sequence (i.e., the bit is not meaningful in other Data frames of the Sequence).

The Connection Recipient may request that a unidirectional Connection be changed to a bi-directional Connection by setting Unidirectional Transmit to zero, in an ACK frame. Once set to zero in an ACK, all subsequent ACKs shall

Copyright International Organization for Standardization
Provided by IHS under license with ISO
No reproduction or networking permitted without license from IHS Not for Resale

be transmitted with Unidirectional Transmit set to zero. The Connection Initiator is not required to honor the request to become bi-directional. See 20.5.4 for additional requirements.

For Class 4, the Remove_Connection (R_C) bit is only meaningful on the last Data frame of a Sequence and only if the E_C bit is set to one. See the requirements for bit 18, End_Connection (E_C) (Class 1 or 6) or Deactivate Class 4 circuit (see 9.7.7).

For Class 6, Unidirectional Transmit Bit (bit 8) is meaningful on a connect-request ($SOF_{c1}$). Unidirectional Transmit shall be set to one, the dedicated connection is unidirectional and only the Nx_Port that transmitted the connect-request that establishes the Connection shall transmit Data frames.

### 9.7.13 Continue Sequence Condition

The Continue Sequence Condition bits (bits 7-6) are information bits that may be set to indicate an estimated transmission time for the next consecutive Sequence of the current Exchange. The Continue Sequence Condition bits are meaningful on a Data frame when the End_Sequence bit is set to one and the Sequence Initiative bit is set to zero. The Continue Sequence Condition bits are not meaningful on a Data frame when the End_Sequence bit set to one and the Sequence Initiative bit set to one.

The Continue Sequence Condition bits are also meaningful on the ACK to the last Data frame (End_Sequence set to one) when Sequence Initiative is also transferred (Sequence Initiative bit set to one). In this case, the Continue Sequence Condition bits shall indicate the expected delay until the Nx_Port that received Sequence Initiative transmits the first frame of its next Sequence.

The Continue Sequence Condition bits may be used to manage link resources within an Nx_Port (e.g., maintaining or removing an existing Class 1 Connection). The bits are informational and may be used to improve the performance and management of link resources within an Nx_Port. The bits are not binding. The time estimate is relative to the time to remove and reestablish a Class 1 Connection regardless of the class being used.

The meaning of the Continue Sequence Condition bits is given in table 32.

**Table 32 - Continue Sequence Condition Bits Definition**

| Encoding | Meaning |
|---|---|
| ’00’ b | No information is being offered regarding when the next Sequence is being transmitted. |
| ’01’ b | The next consecutive Sequence for this Exchange shall be transmitted immediately. |
| ’10’ b | The next consecutive Sequence for this Exchange shall be transmitted in a time period that is less than the time to remove and reestablish a Class 1 Connection (soon). |
| ’11’ b | The next consecutive Sequence transmission for this Exchange shall be delayed for a period of time that is longer than the time to remove and reestablish a Class 1 Connection. If the Sequence Initiator holds Sequence Initiative and indicates delayed transmission of the next Sequence, the Initiator shall wait until the final ACK ($EOF_t$) before transmitting the next Sequence in the Exchange. |

### 9.7.14 Abort Sequence Condition

The Abort Sequence Condition bits (bits 5 to 4) shall be set to a value by the Sequence Initiator on the first Data frame of an Exchange to indicate that the Originator is requiring a specific error policy for the Exchange. For Classes 1, 2, 4 and 6, the Abort Sequence Condition bits shall not be meaningful on other Data frames within an

--`,,```,,,,````-`-`,,`,,`,`,,`---

Copyright International Organization for Standardization
Provided by IHS under license with ISO
No reproduction or networking permitted without license from IHS Not for Resale

Exchange. For Class 3 process policy support, the Abort Sequence Condition bits shall be set to ’10’ b on each Data frame within the sequence to indicate that the Originator is requiring process policy to be used for the Sequence. The error policy passed in the first frame of the first Sequence of an Exchange shall be the error policy supported by both Nx_Ports participating in the Exchange. Additionally, for Class 3 operation the error policy passed in the first received frame of the sequence shall be the error policy supported by both Nx_Ports participating in the Exchange (see 21.6.3).

The definition of the Abort Sequence Condition Bits by the Sequence Initiator is given in table 33.

An Nx_Port, in the PLOGI sequence shall indicate process policy support. Discard policy shall be supported.

If the delivery order of Sequences, without gaps, is required by an FC-4 to match the transmission order of Sequences within an Exchange, then one of the two Discard multiple Sequence Error Policies is required. In the Discard a Single Sequence Error Policy, out of order Sequence delivery is to be expected and handled by the FC-4 or upper level.

The Abort Sequence Condition bits shall be set to a value other than zeros by the Sequence Recipient in an ACK frame to indicate to the Sequence Initiator that the Sequence Recipient has detected an abnormal condition, malfunction, or error.

The definition of the Abort Sequence Condition Bits by the Sequence Recipient is given in table 34.

**Table 33 - Abort Sequence Condition Bits Definition by Sequence Initiator**

| Encoding | Meaning |
|---|---|
| ’00’ b | In the Abort, Discard multiple Sequences Error Policy, the Sequence Recipient shall deliver Sequences to the FC-4 or upper level in the order transmitted under the condition that the previous Sequence, if any, was also deliverable. If a Sequence is determined to be non-deliverable, all subsequent Sequences shall be discarded until the ABTS protocol has been completed. The Abort, Discard multiple Sequences Error Policy shall be supported in Classes 1, 2, 3, 4 and 6. |
| ’01’ b | In the Abort, Discard a single Sequence Error Policy, the Sequence Recipient may deliver Sequences to the FC-4 or upper level in the order that received Sequences are completed by the Sequence Recipient without regard to the deliverability of any previous Sequences. The Abort, Discard a single Sequence Error Policy shall be supported in Class 1, 2, 3, 4 or 6. |
| ’10’ b | In the Process policy with infinite buffers, frames shall be delivered to the FC-4 or upper level in the order transmitted. Process policy with infinite buffers shall only be allowed in Class 1, 3 and 6. In Class 1 and 6, Process policy with infinite buffers shall use ACK_0 (see 11.2.2.3.3). |
| ’11’ b | In the Discard multiple Sequences with immediate retransmission Error Policy, the Sequence Recipient shall deliver Sequences to the FC-4 or upper level in the order transmitted under the condition that the previous Sequence, if any, was also deliverable. If a Sequence is determined to be non-deliverable, all subsequent Sequences shall be discarded until a new Sequence is received with the Retransmission bit in F_CTL set to one or until the ABTS protocol has been completed. The Discard multiple Sequences with immediate retransmission is a special case of the Discard multiple Sequences Error Policy. This policy is applicable to an Exchange where all transmission is in Class 1 or 6. |

### 9.7.15 Relative offset present

When relative offset present is set to one in a Data frame, the parameter Field contains the relative offset for the Payload of the frame as defined by the FC-4 protocol. Relative offset present is only meaningful on Data frames of

--`,,```,,,,````-`-`,,`,,`,`,,`---

Copyright International Organization for Standardization
Provided by IHS under license with ISO
No reproduction or networking permitted without license from IHS Not for Resale

a Sequence and shall be ignored on all other frames. Relative offset present is not meaningful on Link_Control or Basic Link Service Link Data frames. When relative offset present is set to zero on a Data frame, the value in the Parameter Field shall be passed to the upper level.

### 9.7.16 Exchange reassembly

The Sequence Initiator shall set the Exchange reassembly bit (bit 2) to zero to indicate that the Payload in this Data frame is associated with an Exchange between a single pair of Nx_Ports. Therefore, reassembly is confined to a single destination Nx_Port.

Exchange reassembly being set to one is reserved for future use to indicate that the Payload in this Data frame is associated with an Exchange being managed by a single node using multiple Nx_Ports at either the source, destination, or both.

**Table 34 - Abort Sequence Condition Bits Definition by Sequence Recipient**

| Encoding | Meaning |
|---|---|
| ’00’ b | Continue Sequence |
| ’01’ b | A request by the Sequence Recipient to the Sequence Initiator to terminate this Sequence using the Abort Sequence protocol and then optionally perform Sequence recovery. See 12.2.2 and 21.7.2.2 for a description of the Abort Sequence protocol. |
| ’10’ b | A request by the Sequence Recipient to the Sequence Initiator to stop this Sequence. This allows for a request for an early termination by the Sequence Recipient. Some of the data received may have been processed and some of the data discarded. Aborting the Sequence using the ABTS command is not necessary and shall not be used. Both the Sequence Initiator and Recipient end the Sequence in a normal manner. See 21.7.3 for a description of the Stop Sequence protocol. |
| ’11’ b | The Sequence Recipient has detected an error in a Class 1 or Class 6 Sequence and requests that the Sequence Initiator begin immediate retransmission of the Sequence, if able (see 21.7.2.3). Sequence retransmission also uses F_CTL bit 9. The Sequence status is saved by the Sequence Recipient in the Exchange Status Block associated with the aborted SEQ_ID. |

### 9.7.17 Fill Data Bytes

When the bits associated with the Fill Data Bytes (bits 1 to 0) are non-zero, it notifies the Data frame receiver (Sequence Recipient) that one or more of the last three bytes of the Data Field shall be ignored, except for CRC calculation. The fill byte value is not specified by this standard but shall be a valid data byte.

Fill Data Bytes shall only be meaningful on the last Data frame of a series of consecutive Data frames of a single Information Category within a single Sequence (e.g., if a Sequence contains Data frames of a single Information Category, non-zero values Fill Data Bytes shall only be meaningful on the last Data frame of the Sequence). The fill Data bytes shall not be included in the Payload.

### 9.7.18 F_CTL bits on Data frames

Table 35 shows the interactions between specific bits within the F_CTL field. The top part of table 35 describes those bits that are unconditionally meaningful on the first, last, or any Data frame of a Sequence. The

Copyright International Organization for Standardization
Provided by IHS under license with ISO
No reproduction or networking permitted without license from IHS Not for Resale

connect-request may reflect settings for either the first Data frame of a Sequence, the last Data frame of a Sequence, or both first and last.

NOTE A control function may become effective when an F_CTL bit is set to one. The locations where the function is meaningful are indicated in the top part of the table 35.

The bottom part of table 35 describes those bits that are conditionally meaningful (e.g., Bit 19 set to one (column) is only meaningful on the last Data frame of a Sequence. Bit 18 set to one (column) is only meaningful on the last Data frame when bit 19 set to one).

**Table 35 - F_CTL bit interactions on Data frames**

| Bits associated with Data frame order: | 23 | 22 | 21 = 1 | 20 = 1 | 19 = 1 | 18 = 1 | 17 = 1 | 16 = 1 | 9 = 1 | 8 = 1 | 7 to 6 | 5 to 4 | 3 = 1 | 1 to 0 |
|---|---|---|---|---|---|---|---|---|---|---|---|---|---|---|
| 1st frame of Seq<br>last frame of Seq<br>any frame of Seq<br>Class 1 connect-request | M<br>M<br>M<br>M | M<br>M<br>M<br>M | M<br>M<br>M<br>M | <br><br>ML | M<br><br>ML | | M<br>M<br>M<br>MF | | M<br>M<br>M | M<br>M<br><br>M | <br><br>ML | MF | M<br>M<br>M<br>M | M |
| First_Sequence<br>21 = 0<br>21 = 1 | | | | | | | | | | | | <br>ML | | |
| Last_Sequence<br>20 = 0<br>20 = 1 | | | | | | | | | | | | | | |
| End_Sequence<br>19 = 0<br>19 = 1 | | | | <br>ML | | <br>ML | | <br>ML | | | <br>ML | | | |
| End_Connection<br>18 = 0<br>18 = 1 | | | | | | | | | | | | | | |
| Sequence Initiative<br>16 = 0<br>16 = 1 | | | | | | | | | | | | | | |
| Legend:<br>M = Meaningful<br>MF = Only meaningful on first Data frame of a Sequence<br>ML = Only meaningful on last Data frame of a Sequence | | | | | | | | | | | | | | |

### 9.7.19 F_CTL bits on Link_Control frames

Table 36 shows the interactions with F_CTL bits on ACK, BSY, and RJT frames and should be reviewed together with table 35. F_CTL bits 19, 18, and 16 in an ACK frame are transmitted to reflect confirmation (1) or denial (0) of those indications by the Sequence Recipient (e.g., if bits 5 to 4 are set to ’01’ b in response to a Data frame in which bit 19 is set one and bit 16 is set to one, setting bits 19 and 16 to zero in the ACK frame indicates that the Data frame was not processed as the last Data frame and that Sequence Initiative was not accepted by the Sequence Recipient of the Data frame since the Sequence Recipient is requesting that the Sequence Initiator transmit an ABTS frame to Abort the Sequence). See 17.3.8, 17.3.10 and 21.7.2.2 for additional information on setting the Abort Sequence Condition bits.

Copyright International Organization for Standardization
Provided by IHS under license with ISO
No reproduction or networking permitted without license from IHS Not for Resale

The ACK to a connect-request may reflect settings for either the first Data frame of a Sequence, the last Data frame of a Sequence, or both first and last.

A control function may become effective when a F_CTL bit is set to one. The locations where the function is meaningful are indicated in the top part of the table 36.

**Table 36 - F_CTL bit interactions on ACK, BSY or RJT**

| **Bits associated with ACK frame order:** | **23** | **22** | **21** | **20** | **19** | **18** | **16** | **15** | **14** | **9 = 1** | **8 = 1** | **7 to 6** | **5 to 4** | **3** | **1 to 0** |
|---|---|---|---|---|---|---|---|---|---|---|---|---|---|---|---|
| ACK to 1st frame<br>ACK to last frame<br>ACK to any frame<br>ACK to Connect-request | V<br>V<br>V<br>V | V<br>V<br>V<br>V | E<br>E<br>E<br>E | E | ML | | ML | | | M<br>M<br>M | M<br>M<br>M<br>M | ML<br><br>ML | Ma<br>Ma<br>Ma<br>Ma | | |
| Exchange Context<br>23 = 0<br>23 = 1 | V<br>V | | | | | | | | | | | | | | |
| Sequence Context<br>22 = 0<br>22 = 1 | | V<br>V | | | | | | | | | | | | | |
| First_Sequence<br>21 = 0<br>21 = 1 | | | E<br>E | | | | | | | | | | | | |
| Last_Sequence<br>20 = 0<br>20 = 1 | | | | E<br>E | | | | | | | | | | | |
| End_Sequence<br>19 = 0<br>19 = 1 | | | | | E<br>ML | ML | ML | | ML | | | ML | | | |
| End_Connection<br>18 = 0<br>18 = 1 | | | | | | E<br>ML | | | | | | | | | |
| Sequence Initiative<br>16 = 0<br>16 = 1 | | | | | | | E<br>ML | | | | | | | | |

Legend:
M = Meaningful
Ma = Meaningful only on ACK frames
ML = Meaningful only on last ACK, BSY and RJT frames of a Sequence
E = Echo (meaningful) - contains the same value as the received frame
V = Inverse or invert (meaningful) - contains the inverse of the received frame

Copyright International Organization for Standardization
Provided by IHS under license with ISO
No reproduction or networking permitted without license from IHS Not for Resale

## 9.8 Sequence_ID (SEQ_ID)

The SEQ_ID is a one-byte field (Word 3, Bits 31 to 24) assigned by the Sequence Initiator that shall be unique for a specific D_ID and S_ID pair while the Sequence is open. Both the Sequence Initiator and the Sequence Recipient track the status of frames within the Sequence using fields within the Sequence_Qualifier. If its X_ID is unassigned, it shall use any other field or fields (e.g., S_ID, D_ID, or the other Nx_Port's X_ID) for tracking (see 9.2.1, 9.11 and 9.12).

If the Sequence Initiator initiates a new Sequence for an Exchange in any class of service while it already has Sequences open for that Exchange, it is termed a streamed Sequence. If streamed Sequences occur, it is the responsibility of the Sequence Initiator to use X+1 different consecutive SEQ_IDs where X is the number of open Sequences per Exchange (see 15.6.5.10) (e.g., if X = 2 from Login, then consecutive SEQ_IDs of 11-93-22-11-93 is acceptable).

If consecutive non-streamed Sequences for the same Exchange occur during a single Sequence Initiative, it is the responsibility of the Sequence Initiator to use a different SEQ_ID for each consecutive Sequence (e.g., consecutive SEQ_IDs of 21-74-21-74 is acceptable. The examples show when a SEQ_ID is be allowed to be repeated). A series of SEQ_IDs for the same Exchange may also be random and never repeat (see 17.3.4). See 17.6.2 for more discussion regarding reusing and timing out Recovery_Qualifiers following an aborted or abnormally terminated Sequence, or an aborted Exchange.

The combination of Initiator and Recipient Sequence Status Blocks identified by a single SEQ_ID describe the status of that Sequence for a given Exchange. See 17.8.2 for a description of the Sequence Status Block maintained by the Sequence Recipient.

## 9.9 Data Field Control (DF_CTL)

Data Field Control (DF_CTL) is a one-byte field (Word 3, Bits 23 to 16) that specifies the presence of optional headers at the beginning of the Data_Field for Device_Data or Video_Data frames. DF_CTL bits are not meaningful on Link_Control or Basic Link Service frames. The ESP_Header bit is also meaningful on Extended Link Service and FC-4 Link Service frames. Control bit usage is shown in table 37.

**Table 37 - DF_CTL bit definition**

| Word 3, Bit(s) | Optional Header |
|---|---|
| 23 | Reserved |
| 22 | 0 b = Neither ESP_Header nor ESP_Trailer<br>1 b = Both ESP_Header and ESP_Trailer |
| 21 | 0 = No Network_Header<br>1 = Network_Header |
| 20 | 0 = No Association_Header<br>1 = Association_Header |
| 19 to 18 | Reserved |
| 17 to 16 | ’00’ b = No Device_Header<br>’01’ b = 16 Byte Device_Header<br>’10’ b = 32 Byte Device_Header<br>’11’ b = 64 Byte Device_Header |

The Optional Headers shall be positioned in the Data Field in the order specified with the bit 23 header as the first header in the Data Field, bit 22 header as the second header in the Data Field, and so forth, in a left to right manner corresponding to bits 23, 22, 21, and so forth as shown in figure 13 and figure 14.

--`,,```,,,,````-`-`,,`,,`,`,,`---

Copyright International Organization for Standardization
Provided by IHS under license with ISO
No reproduction or networking permitted without license from IHS Not for Resale

If either bit 17 or 16 are set to one, then a Device_Header is present. The size of the Device_Header is specified by the encoded value of bits 17 and 16 as shown.

If an Optional Header is not present as indicated by the appropriate bit in DF_CTL, no space shall be allocated for the Header in the Data Field of the frame (e.g., if bits 23 and 22 are zero and bit 21 is one, the first data byte of the Data Field contains the first byte of the Network_Header).

See clause 10 for Optional Headers requirements.

## 9.10 Sequence count (SEQ_CNT)

The sequence count (SEQ_CNT) is a two-byte field (Word 3, Bits 15 to 0) that shall indicate the sequential order of Data frame transmission within a single Sequence or multiple consecutive Sequences for the same Exchange. The SEQ_CNT of the first Data frame of the first Sequence of the Exchange transmitted by either the Originator or Responder shall be binary zero. The SEQ_CNT of each subsequent Data frame in the Sequence shall be incremented by one.

If a Sequence is streamed, the SEQ_CNT of the first Data frame of the Sequence shall be incremented by one from the SEQ_CNT of the last Data frame of the previously sent Sequence (this is termed continuously increasing SEQ_CNT). If a Sequence is non-streamed, the starting SEQ_CNT may be continuously increasing or binary zero.

The same SEQ_ID and SEQ_CNT shall identify ACK and Link_Response frames as the frame to which it is responding. Frames are tracked on a SEQ_ID, SEQ_CNT basis within the scope of the Sequence_Qualifier for that Sequence.

The SEQ_CNT shall wrap to zero after reaching a value of 65 535. The SEQ_CNT shall then only be incremented to (but not including) the SEQ_CNT of an unacknowledged frame of the same Sequence. Otherwise, data integrity is not ensured. Sequences of Data frames and SEQ_CNT values are discussed in clause 17. See 15.6.5.9 regarding data integrity, Credit, and SEQ_CNT.

## 9.11 Originator Exchange_ID (OX_ID)

The Originator Exchange_ID is a two-byte field (Word 4, Bits 31 to 16) that shall identify the Exchange_ID assigned by the Originator of the Exchange. Each Exchange shall be assigned an identifier unique to the Originator or Originator-Responder pair. If the Originator is enforcing uniqueness via the OX_ID mechanism, it shall set a unique value for OX_ID other than hex 'FF FF' in the first Data frame of the first Sequence of an Exchange. An OX_ID of hex 'FF FF' indicates that the OX_ID is unassigned and that the Originator is not enforcing uniqueness via the OX_ID mechanism. If an Originator uses the unassigned value of hex 'FF FF' to identify the Exchange, it shall have only one Exchange (OX_ID set to hex 'FF FF') with a given Responder.

An Originator Exchange Status Block associated with the OX_ID is used to track the progress of a series of Sequences that comprises an Exchange. See 17.8.1 for a description of the Exchange Status Block.

NOTE If hex 'FF FF' is used as the OX_ID throughout the Exchange, the Originator uses an alternate Sequence tracking mechanism. If the OX_ID is unique, it may be used as an index into a control structure that may be used in conjunction with other constructs to track frames.

--`,,```,,,,````-`-`,,`,,`,`,,`---
Copyright International Organization for Standardization
Provided by IHS under license with ISO
No reproduction or networking permitted without license from IHS Not for Resale

## 9.12 Responder Exchange_ID (RX_ID)

The Responder Exchange_ID is a two byte field (Word 4, Bits 15 to 0) assigned by the Responder that shall provide a unique, locally meaningful identifier at the Responder for an Exchange established by an Originator and identified by an OX_ID. The Responder of the Exchange shall set a unique value for RX_ID other than hex 'FF FF', if RX_ID is being used, by one of two methods:

a) in an ACK to a Data frame in the first Sequence of an Exchange in Class 1 and 2 or
b) in the first Sequence transmitted as a Sequence Initiator, if any, in Class 3.

An RX_ID of hex 'FF FF' shall indicate that the RX_ID is unassigned. RX_ID is not used in Class 6 and shall be set to hex 'FF FF' for all Class 6 frames. If the Responder does not assign an RX_ID other than hex 'FF FF' by the end of the first Sequence, then the Responder is not enforcing uniqueness via the RX_ID mechanism.

When the Responder uses only hex 'FF FF' for RX_ID, it shall have the capability to identify the Exchange through the OX_ID and the S_ID of the Originator of the Exchange. Under all other circumstances, until a value other than hex 'FF FF' is assigned, hex 'FF FF' value for RX_ID shall be used indicating that RX_ID is unassigned. After a value other than hex 'FF FF' is assigned, the assigned value shall be used for the remainder of the Exchange (see 17.3.2 and 17.5.3).

A Responder Exchange Status Block associated with the RX_ID is used to track the progress of a series of Sequences that compose an Exchange. See 17.8.1 for a description of the Exchange Status Block.

NOTE If hex 'FF FF' is used as the RX_ID throughout the Exchange, the Responder uses an alternate Sequence tracking mechanism. If the RX_ID is unique, it may be used as an index into a control structure that may be used in conjunction with other constructs to track frames.

## 9.13 Parameter

The Parameter field (Word 5, Bits 31 to 0) has meanings based on frame type. For Link_Control frames, the Parameter field is used to carry information specific to the individual Link_Control frame. For Data frames with the relative offset present bit set to 1, the Parameter field specifies relative offset, a four-byte field that contains the relative displacement of the first byte of the Payload of the frame from the base address as specified by the ULP. Relative offset is expressed in terms of bytes (see 8.8). The use of the relative offset field is optional and is indicated as a Login Service Parameter. If relative offset is being used, the number of bytes transmitted relative to the protocol-specific base address shall be less than the maximum value of the relative offset (Parameter) field ($2^{32}$). For Data frames with the relative offset Present bit set to zero, the Parameter field shall be set and interpreted in a protocol specific manner that may depend on the type of Information Unit carried by the frame.

Continuously increasing relative offset is the relationship specified between relative offset values contained in frame (n) and frame (n+1) of an Information Category within a single Sequence. Continuously increasing relative offset ($RO_I$) for a given Information Category I is specified by the following:

$RO_I(n+1) = RO_I(n) + \text{Length of Payload}_I(n)$
where

n is $\geq 0$ and represents the consecutive frame count of frames for a given Information Category within a single Sequence. $RO_I(0)$ is the initial relative offset for the Information Category I.

See clause 19 for relative offset requirements. See clause 11 for requirements using the Parameter field in Link_Control frames. See clause 11 for requirements using the Parameter field in Basic Link Data frames.

Copyright International Organization for Standardization
Provided by IHS under license with ISO
No reproduction or networking permitted without license from IHS Not for Resale

# 10 Optional headers

## 10.1 Introduction

Optional headers defined within the Data Field of a frame are

a) ESP_Header and ESP_Trailer,
b) Network_Header,
c) Association_Header, and
d) Device_Header.

Control bits in the DF_CTL field of the Frame_Header define the presence of optional headers. The sequential order of the optional headers, Payload, and their sizes are indicated in figure 13 and figure 14.

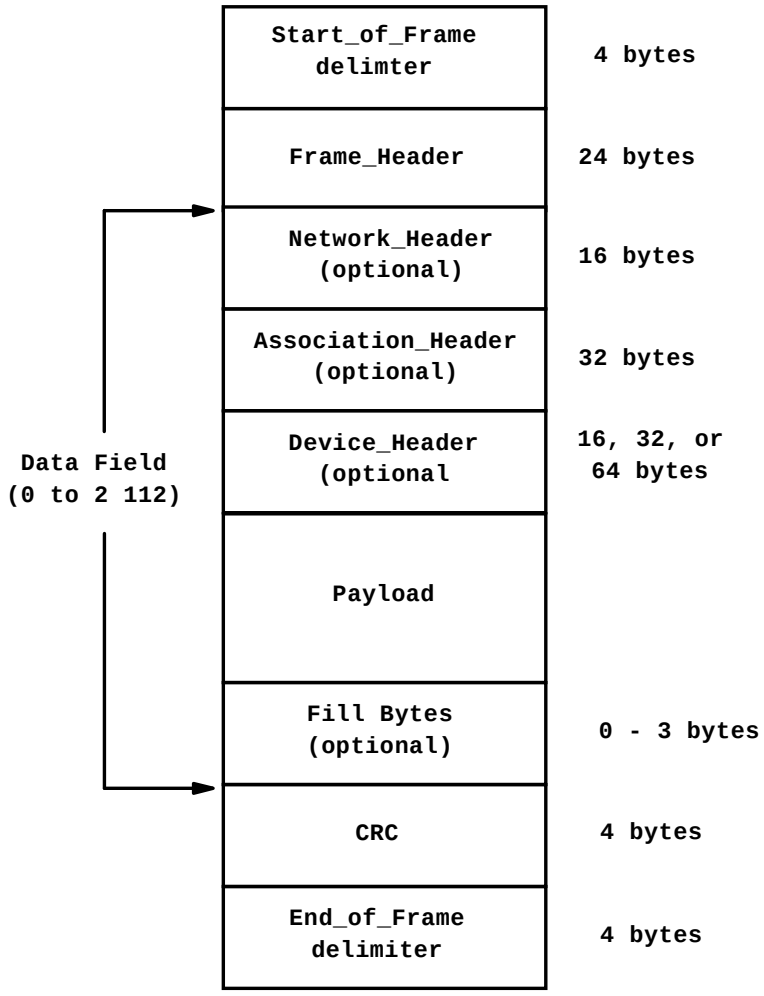


**Figure 13 - Frame structure when ESP_Header is not used**

--`,,```,,,,````-`-`,,`,,`,`,,`---

Copyright International Organization for Standardization
Provided by IHS under license with ISO
No reproduction or networking permitted without license from IHS Not for Resale

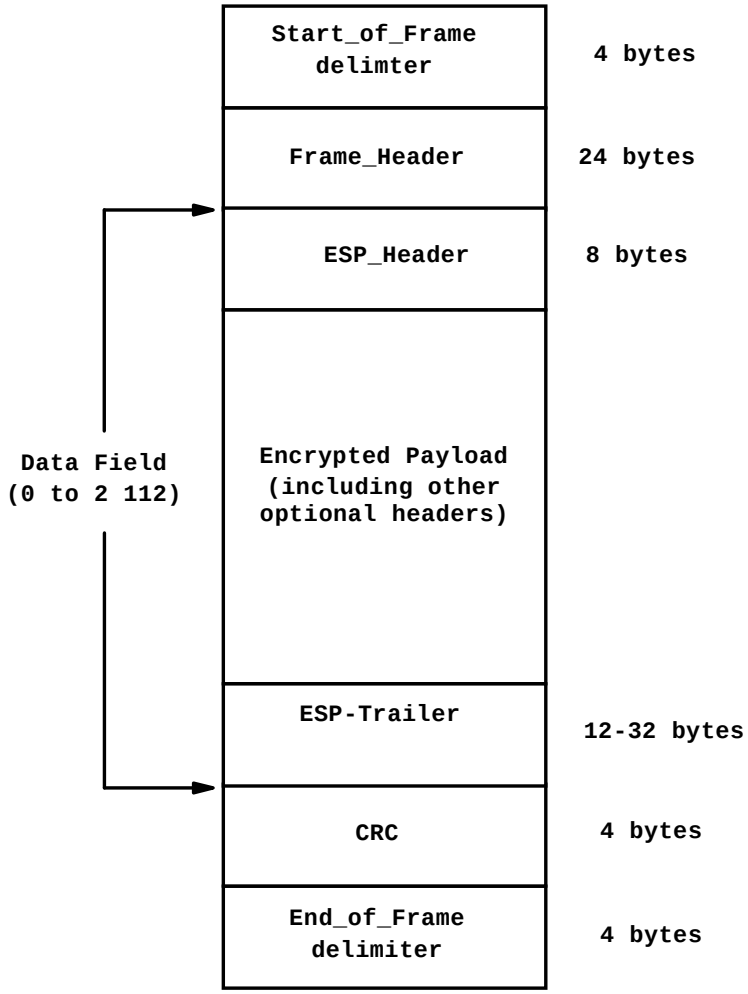


**Figure 14 - Frame structure with ESP_Header and ESP_Trailer**

If DF_CTL bit 22 is set to 1, an ESP_Header shall be the first 8 bytes of the Data Field, and the ESP_Trailer shall end the Data Field. No Fill Bytes are required when the ESP_Trailer is present. If present, a Network_Header shall be the next 16 bytes of the Data Field. If present, an Association_Header shall be the next 16 bytes of the Data Field. If present, a Device_Header shall be the next 16, 32, or 64 bytes of the Data Field. If none of the optional headers is present, no space in the Data Field shall be reserved.

Optional headers are provided for use of the FC-4 layer. If an optional header different from the ESP_Header is being used within a Sequence, it shall be present in the first data frame of that Sequence, and may be present in all data frames of that Sequence. If the ESP_Header is being used within a Sequence, it shall be present in all frames of that Sequence. The use of the optional headers is not defined by this standard.

## 10.2 ESP_Header

The Encapsulating Security Payload (ESP) is defined in the IETF document RFC 2406 (see [25]). It is a generic mechanism to provide confidentiality, data origin authentication, and anti-replay protection to IP packets. FC-SP defines how to use ESP in Fibre Channel, including any negotiation procedure, additional encryption/ authentication algorithm and processing requirements. This clause defines the structure of a Fibre Channel frame conveying an ESP_Header.

ESP shall be applied to FC frames in transport mode (see [25], RFC 2406). The Authentication option shall be

Copyright International Organization for Standardization
Provided by IHS under license with ISO
No reproduction or networking permitted without license from IHS Not for Resale

used, Confidentiality may be negotiated by the two communicating FC_Ports.

Figure 14 shows the format of an FC frame to which ESP is applied. A sender shall apply ESP processing to the Data Field of an FC frame as follows:

a) Add a fixed length ESP_Header (8 bytes), specifying a Security Parameter Index (SPI) and an ESP Sequence Number.
b) Pad the Payload Data received from the FC-4, including any possible other optional header, to the block size required by the negotiated encryption/authentication algorithms, that is a multiple of 32 bits. This ensure that the FC fill bytes are not needed. The Pad Length field shall contain the length of this ESP padding.
c) Encrypt, if negotiated, the data resulting from item b).
d) Compute an Integrity Check Value (ICV), using the negotiated authentication algorithm and parameters, covering:
   A) the FC_Header, with the S_ID, D_ID, and CS_CTL/Priority fields set to zero for the purpose of the ICV computation;
   B) the ESP_Header;
   C) the data resulting from item c).
e) Add an ESP_Trailer containing the ICV computed in item d). The length of the ESP_Trailer shall be negotiated and shall be a multiple of 32 bits.

A receiver shall process an FC frames carrying an ESP_Header and ESP_Trailer as follows:

a) Check the ESP_Header, using the SPI to retrieve the negotiated parameters required to interpret the received FC frame, and the ESP Sequence Number to avoid replay attacks (see [25], RFC 2406). The length of the ESP_Trailer is one of the retrieved parameters.
b) Compute an ICV, using the retrieved parameters, covering:
   A) the FC_Header, with the S_ID, D_ID, and CS_CTL/Priority fields set to zero for the purpose of the ICV computation;
   B) the ESP_Header;
   C) the encrypted payload.
c) Check the computed ICV with the content of the ESP_Trailer. If they are equal the authentication is successful, otherwise not.
d) Decrypt, if negotiated, the encrypted payload.
e) Remove the ESP padding and pass the resulting Payload Data, including any other optional header, to the upper level.

This specification adheres to [25], RFC2406, except for the ICV coverage, that shall include the FC header, except the S_ID, D_ID, and CS_CTL/Priority fields, because the interpretation of a Fibre Channel Payload is determined by the fields contained in the FC header. The CS_CTL/Priority field has to be excluded because is a mutable field, while excluding S_ID and D_ID permits address translation, if needed.

The ESP processing shall be transparent to the FC-4. On the sending side the ESP processing shall be applied to every frame of a sequence to be protected. On the receiving side, the ESP processing shall be applied to every frame that carries an ESP_Header, and only after that the sequence shall be reassembled and sent to the FC-4.

The ESP_Header and ESP_Trailer, if used, shall be present in every frame of a Sequence. If the receiving FC_Port does not support the ESP_Header function, it shall discard the FC frame.

The ESP_Header and ESP_Trailer format in a frame is specified in table 38 as follows:

a) the ESP_Header consists of words 6 and 7;
b) the ESP_Trailer consists of words P+1 through Q;
c) confidentiality covers words 8 through P; and
d) authentication covers words 0 through P.

--`,,```,,,,````-`-`,,`,,`,`,,`---

Copyright International Organization for Standardization
Provided by IHS under license with ISO
No reproduction or networking permitted without license from IHS Not for Resale

**Table 38 - ESP_Header and ESP_Trailer in a frame**

| Bits / Word | 31 .. 24 | 23 .. 16 | 15 .. 08 | 07 .. 00 |
|---|---|---|---|---|
| **0** | R-CTL | D_ID | | |
| **1** | CS_CTL / Priority | S_ID | | |
| **2** | TYPE | F_CTL | | |
| **3** | SEQ_ID | DF_CTL | SEQ_CNT | |
| **4** | OX_ID | | RX_ID | |
| **5** | Parameter | | | |
| **6** | Security Parameter Index (SPI) | | | |
| **7** | ESP Sequence Number | | | |
| **8 .. N** | Payload Data (variable length) | | | |
| **N+1 .. P** | Padding (0 to 255 bytes) | | | |
| | | | Pad Length | Not meaningful |
| **P+1 .. Q** | Integrity Check Value | | | |

## 10.3 Network_Header

A bridge or a gateway node that interfaces to an external Network may use the Network_Header. The Network_Header, if present, shall be 16 bytes in size.

The Network_Header, as shown in table 39, is an optional header within the Data_Field content. Its presence shall be indicated by bit 21 in the DF_CTL field being set to one. The Network_Header may be used for routing between Fibre Channel networks of different Fabric address spaces, or Fibre Channel and non-Fibre Channel networks. The Network_Header contains Name_Identifiers for Network_Destination_Address and Network_Source_Address. See clause 14 for the definition of these fields.

**Table 39 - Network_Header**

| Bits / Word | 31 .. 28 | 23 .. 00 |
|---|---|---|
| **0** | D_NAA | Network_Destination_Address (high order bits) |
| **1** | Network_Destination_Address (low order bits) | |
| **2** | S_NAA | Network_Source_Address (high order bits) |
| **3** | Network_Source_Address (low order bits) | |

The Network_Header, if used, shall be present only in the first Data frame of a Sequence. If the receiving Nx_Port does not support the header function, it shall ignore the header and skip the Data Field by the header length (16 bytes). Destination Network_Address_Authority (D_NAA) or Source Network_Address_Authority (S_NAA) field

Copyright International Organization for Standardization
Provided by IHS under license with ISO
No reproduction or networking permitted without license from IHS Not for Resale

indicates the format of the Name_Identifier used for the network address. See clause 14 for a description of the Name_Identifier formats.

## 10.4 Association_Header

### 10.4.1 Introduction

The Association_Header is an optional header within the Data_Field content. Its presence shall be indicated by bit 20 in the DF_CTL field, located in the Frame_Header, being set to one. The Association_Header shall be 32-bytes in size.

The Association_Header may be used to identify a specific Process or group of Processes within a node associated with an Exchange. When an Nx_Port has indicated during Login that an Initial Process_Associator is required to communicate with it, the Association_Header shall be used by that Nx_Port to identify a specific Process or group of Processes within a node associated with an Exchange.

The Association_Header shall be subdivided into fields as illustrated in table 40. The Validity bits (V) shall indicate whether each of the four Associators contain meaningful (valid) information (bit = 1), or that the Associator shall be ignored (bit = 0) as defined in table 41. The contents of each Associator of the Association_Header are meaningful to the node that generates that particular field. They may not be meaningful to the receiving node.

**Table 40 - Association_Header**

| Bits / Word | 31 .. 24 | 23 .. 00 |
|---|---|---|
| **0** | Validity | Originator Process_Associator (most significant three bytes) |
| **1** | Originator Process_Associator (least significant four bytes) | |
| **2** | Reserved | Responder Process_Associator (most significant three bytes) |
| **3** | Responder Process_Associator (least significant four bytes) | |
| **4** | Obsolete - shall be all zeros | |
| **5** | Obsolete - shall be all zeros | |
| **6** | Obsolete - shall be all zeros | |
| **7** | Obsolete - shall be all zeros | |

The Association_Header is applicable to Class 1, 2, 3 or 6.

The Association_Header is provided to support system architectures that require more than two levels of identifiers, (i.e., X_ID and SEQ_ID).

The Association_Header, if present, shall be present only in the first Data frame of a Sequence.

Copyright International Organization for Standardization
Provided by IHS under license with ISO
No reproduction or networking permitted without license from IHS Not for Resale

Table 41 specifies the meaning of the Validity bits (V) in table 41.

**Table 41 - Association_Header Validity bits (Word 0, Bits 31 to 24)**

| Bit | Description |
|---|---|
| 31 | Originator Process_Associator<br>0 = not meaningful<br>1 = meaningful |
| 30 | Responder Process_Associator<br>0 = not meaningful<br>1 = meaningful |
| 29 | Obsolete |
| 28 | Obsolete |
| 27 to 25 | Reserved |
| 24 | Multicast Process_Associator<br>0 = Unicast<br>1 = Multicast |

### 10.4.2 Process_Associators

#### 10.4.2.1 Originator and Responder Process_Associators

Process_Associators (Originator and Responder) have the following characteristics:

a) A Process_Associator identifies a specific process or group of processes within a node.
b) The Process_Associator is the mechanism where a specific process or group of processes is addressed by another communicating process.

NOTE An example of a group of processes is a set of related processes controlled by a single instance of an operating system.

c) A Process_Associator shall be specified by the node owning the specific process or group of processes and shall be meaningful to that node. The value specified may not be meaningful to the other communicating nodes, although the value may have been made known to them. The other communicating nodes shall return the Process_Associators given to them.
d) A Process_Associator, once assigned for an Exchange, shall not be changed within the life of the Exchange.
e) A Process_Associator shall not be required to be remembered after the logout of the communicating Nx_Port.
f) The contents of Process_Associator fields are implementation dependent.
g) A Process_Associator shall span, within the node, all Nx_Ports having access to the related process.

#### 10.4.2.2 Multicast Process_Associator

The Multicast Process_Associator bit set to one shall indicate that the recipient Nx_Port shall process the passed Process_Associator as a Multicast Process_Associator (i.e., the Nx_Port shall perform an internal multicasting of the Payload of the received frame to all images within the Multicast Group specified by the Process_Associator). This bit set to zero shall indicate that the Recipient Nx_Port shall process the passed Process_Associator as a unicast Process_Associator (i.e., the Nx_Port shall pass the Payload of the received frame to the image specified by the Process_Associator). See clause 23 for a description of Multicast support.

Copyright International Organization for Standardization
Provided by IHS under license with ISO
No reproduction or networking permitted without license from IHS Not for Resale

#### 10.4.2.3 Operation_Associators

Operation_Associators are obsolete in this standard. See FC-PH, FC-PH-2, and FC-PH-3 for information about this obsolete field and its functions.

## 10.5 Device_Header

The Device_Header, if present, shall be 16, 32, or 64 bytes in size. The contents of the Device_Header are controlled at a level above FC-2 based on the TYPE field (see 9.6).

The Device_Header, if present, shall be present either in the first Data frame or in all Data frames of a Sequence. ULP types may use a Device_Header, requiring the Device_Header to be supported. The Device_Header may be ignored and skipped, if not needed. If a Device_Header is present for a ULP that does not require it, the related FC-4 may reject the frame with the reason code of “TYPE not supported”.

Copyright International Organization for Standardization
Provided by IHS under license with ISO
No reproduction or networking permitted without license from IHS Not for Resale

# 11 Data frames and responses

## 11.1 Data frames

### 11.1.1 Introduction

When the term Data frame is used in this standard, it refers to any of the types of Data frames that may be transmitted.

Data frames may be used to transfer information (e.g., data, control, and status information from a source Nx_Port to a destination Nx_Port). In Class 1, 2, 4 and 6, each Data frame successfully transmitted shall be acknowledged to indicate successful delivery to the destination Nx_Port. An indication of unsuccessful delivery of a valid frame shall be returned to the transmitter by a Link_Response frame in Class 1, 2, 4 and 6.

Data frames may be streamed, (i.e., a single Nx_Port may transmit multiple frames before a response frame is received). The number of outstanding, unacknowledged Data frames allowed is specified by a Class Service Parameter during the Login procedure (end-to-end Credit). See clause 15 for the specification of Login and Service Parameters and clause 18 for the specification of flow control rules.

A set of one or more Data frames, related by the same SEQ_ID transmitted unidirectionally from one Nx_Port to another Nx_Port, is called a Sequence.

Class 1 and 6 Data frames, except a connect-request, shall be retransmitted, only if the Discard multiple Sequences with immediate retransmission Exchange error policy is in effect and the Sequence Recipient has requested Sequence retransmission on an ACK frame. Regardless of the error policy, a Class 1 and 6 connect-request or Class 2 Data frame shall be retransmitted, only in response to a corresponding Busy (F_BSY, P_BSY) frame. Except as above, Data frame recovery shall be by means of Sequence retransmission under the control of FC-4. See 21.6.4, 21.6.5 and 21.7, respectively, for Sequence integrity, Sequence error detection, and Sequence recovery requirements.

Each Data frame within a Sequence shall be transmitted within an E_D_TOV timeout period to avoid timeout errors at the destination Nx_Port.

### 11.1.2 Frame Delimiters

Table 42 specifies, by class, the allowable frame delimiters for Data frames (see 8.3 and 8.7).

**Table 42 - Allowable Data frame delimiters**

| Data frame | Delimiters |
|---|---|
| Class 1 | $SOF_{c1}$, $SOF_{i1}$, $SOF_{n1}$, $EOF_n$ |
| Class 2 | $SOF_{i2}$, $SOF_{n2}$, $EOF_n$ |
| Class 3 | $SOF_{i3}$, $SOF_{n3}$, $EOF_n$, $EOF_t$ |
| Class 4 | $SOF_{c4}$, $SOF_{i4}$, $SOF_{n4}$, $EOF_n$ |
| Class 6 | $SOF_{c1}$, $SOF_{i1}$, $SOF_{n1}$, $EOF_n$ |

### 11.1.3 Addressing

The S_ID field designates the source Nx_Port of the Data frame. The D_ID field designates the destination Nx_Port of the Data frame.

Copyright International Organization for Standardization
Provided by IHS under license with ISO
No reproduction or networking permitted without license from IHS Not for Resale

### 11.1.4 Data Field

The Data_Field is a multiple of four bytes and variable in length. The Data Field may contain optional headers whose presence is indicated by the DF_CTL field in the Frame_Header (see clause 10).

In order to accommodate message content within the Data Field that is not a multiple of four bytes, fill bytes shall be appended to the end of the Data Field. The number of fill bytes is specified by F_CTL bits 1 to 0 (see 9.7) and shall only be meaningful on the last frame of an instance of an Information Category. The fill byte value is not specified by this standard.

### 11.1.5 Payload size

The Payload size is determined by the number of bytes between the SOF and EOF minus the 24-byte Frame_Header, any Optional Headers, the fill bytes (0, 1, 2, or 3) and the CRC.

### 11.1.6 Responses

#### 11.1.6.1 R_RDY response

R_RDY transmission shall indicate that the interface buffer, that received the frame, is available for further frame reception. By transmitting an R_RDY, the port has agreed to receive a frame up to the buffer-to-buffer Receive Data Field Size if logged in, and 128 if not logged in. The use of R_RDY is defined for each class as follows:

a) In Class 1 and 6, a connect-request ($SOF_{c1}$) frame shall be responded to by transmitting the R_RDY Primitive Signal. The R_RDY Primitive Signal shall only be used for flow control and shall not indicate that the requested dedicated connection has been made.
b) In Class 2 and Class 3, Data and Link_Control frames received shall be responded to by transmitting the R_RDY Primitive Signal.
c) The R_RDY response is not applicable to Class 4.

#### 11.1.6.2 Data frame responses

##### 11.1.6.2.1 Introduction

Responses to Data frames are called Link_Control response frames (see 11.2). There are two types:

a) ACK frames - ACK_0 and ACK_1
b) Link_Response frames - P_BSY, P_RJT, F_BSY, and F_RJT.

All Link_Control response frames shall be transmitted in the same class as the frame that it is responding to. However, ACK_0 or ACK_1 to a connect-request frame ($SOF_{c1}$) shall be sent as a Class 1 frame and not subject to buffer-to-buffer flow control.

##### 11.1.6.2.2 ACK frames - successful Data frame delivery

Table 43 defines what ACK frames shall be used for each class for successful Data frame delivery.

Copyright International Organization for Standardization
Provided by IHS under license with ISO
No reproduction or networking permitted without license from IHS Not for Resale

**Table 43 - ACK Frames by Class**

| Data frame | ACK |
|---|---|
| Class 1 | ACK_0, ACK_1 |
| Class 2 | ACK_0, ACK_1 |
| Class 3 | No Response |
| Class 4 | ACK_0, ACK_1 |
| Class 6 | ACK_0, ACK_1 |

#### 11.1.6.3 Link_Response frames - Unsuccessful Data frame delivery

Table 44 defines what RJT or BSY frames shall be used for each class for unsuccessful Data frame delivery.

**Table 44 - Link_Response Frames by Class**

| Data frame | ACK |
|---|---|
| Class 1 | F_BSY (Fabric Busy)<br>P_BSY (Nx_Port Busy)<br>F_RJT (Fabric Reject)<br>P_RJT (Nx_Port Reject) |
| Class 2 | F_BSY (Fabric Busy)<br>P_BSY (Nx_Port Busy)<br>F_RJT (Fabric Reject)<br>P_RJT (Nx_Port Reject) |
| Class 3 | No Response |
| Class 4 | F_RJT (Fabric Reject)<br>P_RJT (N_Port Reject) |
| Class 6 | F_BSY (Fabric Busy)<br>P_BSY (N_Port Busy)<br>F_RJT (Fabric Reject)<br>P_RJT (N_Port Reject) |

## 11.2 Link_Control Frames

### 11.2.1 Introduction

Link_Control frames (ACK and Link_Response frames) shall be used by the Nx_Port to control Class 1, 2, 4 and 6 frame transfers. Busy responses are not valid for Class 4.

ACK and Link_Response frames indicate successful or unsuccessful frame delivery of a valid frame to the FC-2 level in Nx_Ports. The ACK and Link_Response frames also participate in end-to-end flow control. ACK frames shall indicate successful delivery to the destination Nx_Port, while Link_Response frames shall indicate unsuccessful delivery to the Fabric and Nx_Port.

If preemption is not enabled, the Fabric shall reply to a Class 1, 2 or 6 preemption request frame, with an F_RJT

Copyright International Organization for Standardization
Provided by IHS under license with ISO
No reproduction or networking permitted without license from IHS Not for Resale

frame to the requesting Nx_Port with a Preemption not enabled" reason code. If preemption is rejected, the Fabric shall reply to a Class 1, 2 or 6 preemption request frame, with an F_RJT frame to the requesting Nx_Port with a Preemption request rejected" reason code.

The Fabric, in reply to a Class 1, 2 or 6 preemption request frame, shall send an F_BSY frame to the requesting Nx_Port, if the Fabric is unable to complete the preemption.

Link_Control frames are identified by the ROUTING field being set to ’1100’ b and the INFORMATION field as shown in table 45.

**Table 45 - Link_Control Information Categories**

| ROUTING | INFORMATION | Description | Abbr. |
|---|---|---|---|
| ’1100’ b | ’0000’ b | Acknowledge_1 | ACK_1 |
| | ’0001’ b | Acknowledge_0 | ACK_0 |
| | ’0010’ b | Nx_Port Reject | P_RJT |
| | ’0011’ b | Fabric Reject | F_RJT |
| | ’0100’ b | Nx_Port Busy | P_BSY |
| | ’0101’ b | Fabric Busy to Data frame | F_BSY |
| | ’0110’ b | Fabric Busy to Link_Control frame | F_BSY |
| | ’0111’ b | Link Credit Reset | LCR |
| | ’1000’ b | Notify - obsolete | NTY |
| | ’1001’ b | End | END |
| | others | reserved | |

The Parameter field is reserved except for ACK_1 (see 11.2.2.3.2) and ACK_0 (see 11.2.2.3.3).

The TYPE field for Link_Control frames other than F_BSY shall be reserved.

The DF_CTL field shall be set to zeros since a Link_Control frame contains a Data Field of zero length.

An Nx_Port shall provide sufficient resources to receive Link_Control frames in response to Data frames it originated. An Nx_Port shall not transmit P_BSY in response to Link_Control frames

NOTE It is not necessary to save information in order to retransmit a Link_Control frame since F_BSY to a Link_Control frame contains all information required to retransmit and P_BSY is not allowed for Link_Control frames.

LCR (see 11.2.4.2) may always be retransmitted in response to an F_BSY. For ACK and RJT frames, see individual commands for any restrictions on frame retransmission in response to F_BSY. Link_Control frames shall be transmitted within an E_D_TOV timeout period of the event that causes transmission of the Link_Control frame.

--`,,```,,,,````-`-`,,`,,`,`,,`---

Copyright International Organization for Standardization
Provided by IHS under license with ISO
No reproduction or networking permitted without license from IHS Not for Resale

Table 46 indicates allowable delimiters for Link_Control frames by class.

**Table 46 - Link_Control frame delimiters**

| ACK, BSY, RJT | Delimiters |
|---|---|
| Class 1 | $SOF_{n1}$, $EOF_n$, $EOF_t$, $EOF_{dt}$ |
| Class 2 | $SOF_{n2}$, $EOF_n$, $EOF_t$ |
| Class 4 | $SOF_{c4}$, $SOF_{n4}$, $EOF_n$, $EOF_t$, $EOF_{dt}$, $EOF_{rt}$ |
| Class 6 | $SOF_{n1}$, $EOF_n$, $EOF_t$, $EOF_{dt}$ |
| **LCR** | **Delimiters** |
| Class 2 | $SOF_{n2}$, $EOF_n$ |
| Class 4 | $SOF_{n4}$, $EOF_n$, $EOF_t$, $EOF_{dt}$, $EOF_{dti}$, $EOF_{rt}$, $EOF_{rti}$ |

### 11.2.2 Link_Continue function

#### 11.2.2.1 Introduction

The Link_Continue function provides a positive feedback mechanism to control the flow of Data frames on the link. A Data frame shall only be transmitted when the applicable FC_Port has indicated that a buffer is available for frame reception. The following list specifies flow control elements:

a) R_RDY - buffer-to-buffer flow control for frames between FC_Ports. The R_RDY Primitive is transmitted when the corresponding interface buffer is available for receipt of any Class 1 or 6/$SOF_{c1}$, Class 2, Class 3 frame.
b) ACK_0 - successful or unsuccessful delivery of a Sequence (see 11.2.2.3) between Initiator and Recipient Nx_Ports, with or without a Fabric present. ACK_0 is only applicable to Class 1, Class 2, Class 4 and Class 6 frames.
c) ACK_1 - end-to-end flow control for a single Data frame transfer between Initiator and Recipient Nx_Ports with or without a Fabric present. The ACK_1 frame is transmitted on receipt of a Class 1, Class 2, Class 4 and Class 6 frame. An FC_Port should transmit R_RDY and Link_Control frames before Data frames in order to avoid buffer-to-buffer and end-to-end Credit problems.

#### 11.2.2.2 Receiver Ready (R_RDY)

The R_RDY Primitive shall indicate that a single frame (valid or invalid) was received and that the interface buffer, that received the frame, is available for further frame reception. An FC_Port may choose to support multiple buffers for frames using the R_RDY Primitive for flow control. The number of buffers is specified during Login as buffer-to-buffer Credit.

R_RDYs shall be transmitted between FC_Ports with or without a Fabric present for all Class 1 and 6/$SOF_{c1}$, Class 2 and Class 3 frames. The R_RDY Primitive is not forwarded to any higher levels within an FC_Port or passed beyond the entry or exit point of the Fabric.

See 8.2 for specification of the number of Idles before and after the R_RDY Primitive during transmission.

There is no response to an R_RDY Primitive.

Copyright International Organization for Standardization
Provided by IHS under license with ISO
No reproduction or networking permitted without license from IHS Not for Resale

### 11.2.2.3 Acknowledge (ACK)

#### 11.2.2.3.1 General

ACK_0 or ACK_1 may be used for acknowledgment of Data frames between Initiator and Recipient Nx_Ports for a given Sequence, but usage shall follow the allowable forms based on support defined in Login. Prior to N_Port Login, ACK_1 shall be used. Following N_Port Login, the decision to use ACK_0 or ACK_1 shall be made based on the results of N_Port Login.

The ACK frame shall indicate that one or more valid Data frames were received by the destination Nx_Port for the corresponding Sequence_Qualifier and SEQ_CNT of a valid Exchange as specified in the Sequence_Qualifier, and that the interface buffers that received the frame or frames are available for further frame reception. ACK frames shall be used in Class 1, 2, 4 and 6 and transmitted in the same class as the Data frame or frames that are being acknowledged.

NOTE 1 In Class 1 and 6, it is recommended that Nx_Ports transmit ACK_1 in the same order that the corresponding Data frames are received.

When multiple ACK forms are supported by both the Sequence Initiator N_Port Login parameters and the Dequence Recipient N_Port Login parameters, ACK_0 usage shall take precedence over ACK_1. ACK_1 shall be the default, if both ends support no other ACK form. Mixing ACK forms within a given Sequence is not allowed (i.e., only one ACK form shall be used within a single Sequence). ACK precedence is summarized in table 47.

**Table 47 - ACK precedence**

| Sequence Recipient word 1, bit 31 (ACK_0 Capable) | Sequence Initiator word 0, bit 10 (ACK_0 Capable) | ACK form required | Sequence Recipient word 1, bit 31 (ACK_0 Capable) |
|---|---|---|---|
| 0 | 0 | ACK_1 | 0 |
| 0 | 1 | ACK_1 | 0 |
| 1 | 0 | ACK_1 | 1 |
| 1 | 1 | ACK_0 | 1 |

For all forms of ACK, when the History bit (bit 16) of the Parameter Field is set to zero, it shall indicate that the Sequence Recipient has transmitted all previous ACKs (i.e., lower SEQ_CNT), if any, for this Sequence. When the History bit (bit 16) of the Parameter Field is set to one, it shall indicate that at least one previous ACK has not been transmitted (e.g., Data frame not processed, or Data frame not received) by the Sequence Recipient. Using this historical information allows an Nx_Port to reclaim end-to-end Credit for a missing ACK frame.

Being able to reclaim end-to-end Credit does not relieve the Nx_Port of accounting for all ACK frames of a Sequence in Class 2. ACK frames shall not be retransmitted in response to an F_BSY (Class 2). The F_BSY frame to an ACK shall be discarded.

Support for ACK_0 may not be symmetrical for a single Nx_Port as a Sequence Initiator and Sequence Recipient (see 15.6.5.5.3 and 15.6.5.6.2).

NOTE 2 Throughout this standard, ACK refers to one of the two forms (ACK_1 or ACK_0) and although there are two command codes in R_CTL, the Parameter Field History bit (bit 16) and ACK_CNT (bits 15 to 0) are used in a consistent manner.

The ACK frame provides end-to-end flow control for one or more Data frames between Initiator and Recipient Nx_Ports as defined in ACK_0 or ACK_1. See 18.4.3.3 for usage rules. A specific Data frame shall be acknowledged once and only once. ACK reception does not imply Data delivery to a higher level.

Copyright International Organization for Standardization
Provided by IHS under license with ISO
No reproduction or networking permitted without license from IHS Not for Resale

#### 11.2.2.3.2 ACK_1

All Nx_Ports, as the default, prior to Login shall support ACK_1. The SEQ_CNT of the ACK_1 shall match the single Data frame being acknowledged. If an Nx_Port only supports ACK_0, it shall Logout any Nx_Port that attempts to Login that does not support ACK_0. The Parameter Field contains a value of hex '0001' in ACK_CNT (bits 15 to 0) to indicate that a single Data frame is being acknowledged. The INFORMATION field (Word 0, bits 27 to 24) shall be set to '0000' b.

#### 11.2.2.3.3 ACK_0

ACK_0 is the designation used when the ACK_CNT (bits 15 to 0) of the Parameter Field of the ACK_0 frame contains a value hex '0000' to indicate that all Data frames of a Sequence are being acknowledged. The SEQ_CNT of the ACK_0 shall match the SEQ_CNT of the last Data frame received within the Sequence. The INFORMATION field (Word 0, bits 27 to 24) shall be set to '0001' b.

The ACK_0 frame may be used for both Discard and Process Exchange Error Policies. For both policy types, ACK_0 support as indicated by Login also specifies that infinite buffering shall be used.

When multiple ACK forms are supported by both Sequence Initiator N_Port Login parameters and the destination Nx_Port Sequence Recipient N_Port Login parameters, ACK_0 usage shall take precedence over ACK_1. ACK_1 shall be the default, if both ends support no other common ACK form.

If both Sequence Initiator and Sequence Recipient support ACK_0, a single ACK_0 per Sequence shall be used to indicate successful Sequence delivery or to set Abort Sequence Condition bits. An additional ACK_0 shall be used within a Sequence to:

a) perform X_ID interlock or
b) respond to a connect-request (SOFc1).

ACK_0 shall not participate in end-to-end Credit management. Mixing ACK forms in a Sequence is not allowed.

Although infinite buffers is indicated at the FC-FS level within an Nx_Port, individual FC-4s (e.g., FCP-3) may agree on a maximum Sequence size that is specified at the upper level through Mode Select in SCSI. In each protocol, a burst size is specified that indicates the largest single Sequence that shall be transferred. By further controlling the maximum number of concurrent Sequences, each Nx_Port may limit the amount of buffering that is actually required.

#### 11.2.2.3.4 Header definition for all ACK forms

##### 11.2.2.3.4.1 Addressing

The D_ID field designates the source of the Data frame (Sequence Initiator) being replied to by the ACK, while the S_ID field designates the source of the ACK frame (Sequence Recipient).

##### 11.2.2.3.4.2 F_CTL

The F_CTL field is returned with both Sequence and Exchange Context bits inverted in the ACK frame. Other bits may also be set according to table 36.

##### 11.2.2.3.4.3 SEQ_ID

Equal to the SEQ_ID of the frame being replied to by ACK.

##### 11.2.2.3.4.4 SEQ_CNT

Shall be equal to the SEQ_CNT of the highest Data frame being replied to by the ACK.

Copyright International Organization for Standardization
Provided by IHS under license with ISO
No reproduction or networking permitted without license from IHS Not for Resale

#### 11.2.2.3.4.5 Parameter field

The Parameter Field is defined as follows:

a) History Bit (bit 16)
   0 = all previous ACKs transmitted
   1 = at least one previous ACK not transmitted
b) ACK_CNT (bits 15 to 0)
   N = 0 All Data frames (ACK_0)
   N = 1 Data frames (ACK_1)
   N > 1 Reserved

#### 11.2.2.3.5 Responses

The responses to ACK are F_RJT, P_RJT or F_BSY (except Class 4, when Class 4 circuit in Live State).

### 11.2.3 Link_Response

#### 11.2.3.1 Introduction

Link_Response frames shall be sent for Class 1, 2, 4 and 6. The F_BSY and P_BSY responses are not applicable to a Class 4 circuit. An FC_Port shall only send Link_Response frames in reply to valid frames (see 8.9.2).

A Link_Response frame indicates that the frame identified by the Sequence_Qualifier and SEQ_CNT was not delivered to or processed by the destination FC_Port. When an FC_Port generates a Link_Response frame, it is routed to the FC_Port indicated by the D_ID in the frame. Link_Response frames may be:

a) Busy - indicates a busy condition was encountered by the FC_Port.
b) Reject - indicates that delivery of the frame is being denied.

#### 11.2.3.2 Fabric Busy (F_BSY)

#### 11.2.3.2.1 Description

The F_BSY frame shall indicate that the FC_Port generating the F_BSY is temporarily occupied with other link activity and is unable to deliver the frame. A reason code is identified in the TYPE field (word 2, bits 31 to 28). In Class 1 and 6, F_BSY shall only be transmitted in response to the $SOF_{c1}$ frame and shall be ended with $EOF_{dt}$. In Class 2, any Data frame or ACK frame may receive an F_BSY response. A Busy response shall not be used in Class 3.

There are two different Link_Control codes defined for F_BSY as shown in table 45. When word 0, bits 27 to 24 has a value of ’0101’ b, the F_BSY is in response to a Data frame. When word 0, bits 27 to 24 has a value of ’0110’ b, F_BSY is in response to a Link_Control frame.

A F_BSY frame shall not be transmitted in response to another busy frame (either F_BSY or P_BSY). If the Fabric is unable to deliver the F_BSY frame, it shall be discarded.

When an Nx_Port receives an F_BSY frame in response to a Data frame, the Nx_Port shall retransmit the busied frame if it has not exhausted its ability to retry. Therefore, an Nx_Port shall save sufficient information for Data frames with a $SOF_{c1}$, or $SOF_{x2}$ delimiter for retransmission until an ACK or RJT is received or retry is exhausted.

If an Nx_Port has exhausted its ability to retry Data frames in response to an F_BSY, it shall notify the FC-4 or an upper level. The Nx_Port may perform the Abort Sequence Protocol based on the Exchange Error Policy.

It is not necessary to save information in order to retransmit a Link_Control frame, since F_BSY to a Link_Control frame contains all information required to retransmit and P_BSY is not allowed in response to Link_Control frames. In Class 2, if an Nx_Port receives an F_BSY in response to an ACK frame, it shall discard the F_BSY frame.

Copyright International Organization for Standardization
Provided by IHS under license with ISO
No reproduction or networking permitted without license from IHS Not for Resale

If a Fabric determines it needs to send an F_BSY in response to a frame, it shall set fields in the header as follows:

a) Copy the S_ID and D_ID fields from the busied frame into the D_ID and S_ID fields, respectively (i.e., interchange them). Thus, the D_ID field designates the source of the frame encountering the busy condition while the S_ID field designates the destination of the frame encountering the busy condition.
b) Invert the Exchange and Sequence Context bits in the F_CTL field. Other F_CTL bits may also be set in accordance with table 36.
c) Select the correct Link_Control code value for the F_BSY depending on whether it is in response to a Data frame or Link_Control frame.
d) The SEQ_ID, SEQ_CNT and Parameter fields shall be copied unchanged from the frame being busied.
e) The Data Field (if any) shall be discarded
f) Select the most appropriate reason code (see table 48) and place it in the TYPE field (Word 2, bits 31 to 28).
g) If the frame being busied is a Link_Control frame, the Link_Control command code (see table 45) of the busied frame in the INFORMATION field (Word 0, bits 27 to 24) shall be copied to the TYPE field (Word 2, bits 27 to 24) of the F_BSY frame.

The Fabric shall use $EOF_{dt}$ for Class 1 and 6 F_BSY frames (connect-terminate) and $EOF_n$ for Class 2 F_BSY frames.

The fabric shall not F_BSY any Class 4 frames.

**Table 48 - F_BSY Reason Codes**

| Encoded Value Word 2, bits 31 to 28 | Name | Description |
|---|---|---|
| ’0001’ b | Fabric busy | The Fabric is unable to deliver the frame to the destination Nx_Port due to conditions internal to the Fabric. |
| ’0011’ b | N_Port busy | The destination Nx_Port is currently involved in a Class 1 dedicated connection and the Fabric is unable to deliver the frame. |
| Others | Reserved | |

#### 11.2.3.2.2 Responses

The following are the possible responses:

a) R_RDY Primitive ($SOF_{x2}$)
b) Link_Response: none

### 11.2.3.3 N_Port Busy (P_BSY)

#### 11.2.3.3.1 Description

The P_BSY shall indicate that the destination Nx_Port is temporarily occupied with other link activity and is not able to accept the frame. A reason code shall be identified in the Parameter field of a P_BSY frame. In Class 1 and 6, P_BSY shall only be transmitted in response to the $SOF_{c1}$ frame and shall be ended with $EOF_{dt}$. In Class 2, any Data frame may receive a P_BSY response. A Busy response shall not be used in Class 3.

A P_BSY frame shall not be transmitted in response to another Busy frame (either F_BSY or P_BSY). If the Nx_Port is unable to accept the P_BSY frame, it shall be discarded.

--`,,```,,,,````-`-`,,`,,`,`,,`---

Copyright International Organization for Standardization
Provided by IHS under license with ISO
No reproduction or networking permitted without license from IHS Not for Resale

When an Nx_Port receives P_BSY in response to a frame transmission, the Nx_Port shall retransmit the busied frame if it has not exhausted its ability to retry. Therefore, an Nx_Port shall save sufficient information for Data frames with a $SOF_{c1}$, or $SOF_{x2}$ delimiter for retransmission until an ACK or RJT is received or retry is exhausted.

If an Nx_Port has exhausted its ability to retry Data frame transmission in response to a P_BSY, it shall notify the FC-4 or an upper level. The Nx_Port may perform the Abort Sequence protocol based on the Exchange Error Policy.

P_BSY indicates that the Busy was issued by the destination Nx_Port. P_BSY shall not be issued in response to a Link_Control frame. An Nx_Port shall process a Link_Control frame for each unacknowledged Data frame transmitted.

If an Nx_Port determines it needs to send a P_BSY in response to a frame, it shall set fields in the header as follows:

a) Copy the S_ID and D_ID fields from the busied frame into the D_ID and S_ID fields, respectively (i.e., interchange them). Thus, the D_ID field designates the source of the frame encountering the busy condition while the S_ID field designates the destination of the frame encountering the busy condition.
b) Invert the Exchange and Sequence Context bits in the F_CTL field. Other F_CTL bits may also be set in accordance with table 36.
c) The SEQ_ID and SEQ_CNT fields shall be copied unchanged from the frame being busied.
d) The four bytes of the Parameter field shall indicate the action and reason code for the P_BSY response as defined in Table 49. Tables 50 and 51 specify the P_BSY action and reason codes, respectively.
e) The Data Field (if any) shall be discarded

The N_Port shall not P_BSY any Class 4 frames.

**Table 49 - P_BSY code format**

| Parameter field | |
|---|---|
| **Bits** | **Value** |
| 31 to 24 | Action Code (see table 50) |
| 23 to 16 | Reason Code (see table 51) |
| 15 to 8 | Reserved |
| 7 to 0 | Vendor Unique Code |

**Table 50 - P_BSY action codes**

| Encoded Value Word 5, bits 31 to 24 | Description |
|---|---|
| ’00000001’ b | Action 1: indicates that the Sequence Recipient has busied the Sequence ($EOF_t$ or $EOF_{dt}$). For a Class 1 or 6 connect-request the busy frame is ended with $EOF_{dt}$. The Sequence Recipient shall only terminate the Sequence on a Busy in response to a connect-request ($SOF_{c1}$) or in response to an interlocked Data frame associated with X_ID assignment ($SOF_{i2}$). The frame and Sequence are retryable at a later time. |
| ’00000010’ b | Action 2: indicate that the Sequence Recipient has busied a Class 2 frame and that the Sequence has not been terminated ($EOF_n$). The frame is retryable at a later time. |
| Others | Reserved |

Copyright International Organization for Standardization
Provided by IHS under license with ISO
No reproduction or networking permitted without license from IHS Not for Resale

**Table 51 - P_BSY Reason Codes**

| Encoded Value Word 5, bits 23 to 16 | Definition | Description |
|---|---|---|
| ’00000001’ b | Physical N_Port busy (P_BSY) | The destination Nx_Port LCF is currently busy and is unable to accept of the frame. |
| ’00000011’ b | N_Port Resource busy | The destination Nx_Port is unable to process the Data frame at the present time. |
| ’00000111’ b | Partial Multicast Busy | See clause 23 |
| ’11111111’ b | Vendor specific Busy (See Bits 7 to 0) | May be used to specify vendor unique reason codes. |
| Others | Reserved | |

#### 11.2.3.3.2 Responses

The responses to ACK are F_RJT, P_RJT or F_BSY (except Class 4, when Class 4 circuit in Live State).

### 11.2.3.4 Reject (P_RJT, F_RJT)

#### 11.2.3.4.1 Introduction

The Reject Link_Response shall indicate that delivery of a frame is being denied. A four-byte reject action and reason code shall be contained in the Parameter field. Rejects may be transmitted for a variety of conditions. For certain conditions retry is possible, whereas for other conditions it is not and intervention beyond the scope of this standard may be required.

In Class 1, 2, 4 and 6, if an FC_Port detects an error in a Data frame, it shall transmit a Reject frame with one of the reason codes specified in table 54. If an error is detected in a Link_Control frame, a Reject frame shall only be transmitted under specific conditions.

A Fabric shall only reject a Link_Control frame for the following reasons:

a) Class not supported
b) Invalid D_ID
c) Invalid S_ID
d) FC_Port not available-temporary
e) FC_Port not available-permanent
f) Login required (Fabric)
g) Class 6 non-uniform Link_Control frame

An Nx_Port shall only reject a Link_Control frame because of an unexpected ACK with Action code 2 as specified in table 53.

If an Nx_Port detects an error in a Link_Control frame for a valid Exchange for a reason not listed above, it shall initiate the Abort Sequence Protocol and not transmit a Reject frame. For an unidentified or invalid Exchange, if an error is detected in a Link_Control frame, the FC_Port shall discard the frame and ignore the Link_Control frame error. If a Class 3 frame satisfies a rejectable condition, the frame shall be discarded. A Reject frame (F_RJT, P_RJT) shall not be transmitted in response to another Reject frame (either F_RJT or P_RJT); the received Reject frame in error shall be discarded.

--`,,```,,,,````-`-`,,`,,`,`,,`---
Copyright International Organization for Standardization
Provided by IHS under license with ISO
No reproduction or networking permitted without license from IHS Not for Resale

If an Nx_Port determines it needs to send a Reject (either F_RJT or P_RJT) in response to a frame, it shall set fields in the header as follows:

a) Copy the S_ID and D_ID fields from the rejected frame into the D_ID and S_ID fields, respectively (i.e., interchange them). Thus, the D_ID field designates the source of the frame encountering the reject condition while the S_ID field designates the destination of the frame encountering the reject condition.
b) Invert the Exchange and Sequence Context bits in the F_CTL field. Other F_CTL bits may also be set in accordance with table 36.
c) The SEQ_ID and SEQ_CNT shall be copied unchanged from the frame being rejected.
d) The four bytes of the Parameter field shall indicate the action and reason for the Reject response as defined in table 52. Table 53 and Table 54 specify the Reject Action codes and Reject Reason Codes respectively.
e) The Data Field (if any) shall be discarded.

#### 11.2.3.4.2 Class 4

Class 4 shall use the F_RJT and P_RJT.

If the EE_C4_Credit rules are violated by a source N_Port, the destination N_Port shall reject the frame (P_RJT) with a Reject reason code of “Protocol error” (see 11.2.3.4).

The frame’s VC_ID field shall contain the appropriate CIVC_ID or CRVC_ID value. This value may be different from the value in the VC_ID field in the Data frame being rejected.

The Fabric shall not reject any $SOF_{n4}$ or $SOF_{i4}$ delimited frames.

The VC_ID field shall be set to zero in an F_RJT frame with the reason code “Invalid VC_ID”.

FC_Ports shall not reject an END Link_Control command. FC_Ports shall discard END Link_Control commands with invalid D_ID || S_ID || VC_ID frame header content.

#### 11.2.3.4.3 Parameter field

##### 11.2.3.4.3.1 Reject Code format

The four bytes of this field shall indicate the action code and reason for rejecting the request (see tables 52, 53 and 54).

The first error detected shall be the error reported; the order of checking is not specified.

**Table 52 - Reject Code format**

| Parameter field | |
|---|---|
| **Bits** | **Value** |
| 31 to 24 | Action Code (see table 53) |
| 23 to 16 | Reason Code (table 54) |
| 15 to 8 | Reserved |
| 7 to 0 | Vendor Unique Code |

--`,,```,,,,````-`-`,,`,,`,`,,`---

Copyright International Organization for Standardization
Provided by IHS under license with ISO
No reproduction or networking permitted without license from IHS Not for Resale

**Table 53 - Reject Action Codes**

| Encoded Value Word 5, bits 31 to 24 | Description | Action |
|---|---|---|
| ’00000001’ b | Retryable error | Action 1: indicates that if the condition indicated in the reject Reason code is changed or corrected, the sequence may be retryable.<br>Applicability:<br>by Fabric when D_ID = Fabric<br>by Fabric when D_ID = Nx_Port<br>by Nx_Port when D_ID = Nx_Port |
| ’00000010’ b | Non-retryable error | Action 2: indicates that the Sequence is non-retryable and further recovery (e.g., Abort Exchange) may be required<br>Applicability:<br>by Fabric when D_ID = Fabric<br>by Nx_Port when D_ID = Nx_Port |
| Other codes | Reserved | |

**Table 54 - Reject Reason Codes**

| Encoded Value Word 5, bits 23 to 16 | Description | By | Action Code |
|---|---|---|---|
| ’00000001’ b | Invalid D_ID | B | R |
| ’00000010’ b | Invalid S_ID | B | R |
| ’00000011’ b | Nx_Port not available, temporary | F | R |
| ’00000100’ b | Nx_Port not available, permanent | F | R |
| ’00000101’ b | Class not supported | B | R |
| ’00000110’ b | Delimiter usage error | B | N |
| ’00000111’ b | TYPE not supported | B | N |
| ’00001000’ b | Invalid Link_Control | P | N |
| ’00001001’ b | Invalid R_CTL field | P | N |
| ’00001010’ b | Invalid F_CTL field | P | N |
| ’00001011’ b | Invalid OX_ID | P | N |

Legend:
F = F_RJT (Fx_Port)
P = P_RJT (Nx_Port)
B = Both F_RJT and P_RJT
R = Retryable
N = Non-retryable

--`,,```,,,,````-`-`,,`,,`,`,,`---

Copyright International Organization for Standardization
Provided by IHS under license with ISO
No reproduction or networking permitted without license from IHS Not for Resale

**Table 54 - Reject Reason Codes (Continued)**

| Encoded Value Word 5, bits 23 to 16 | Description | By | Action Code |
|---|---|---|---|
| ’00001100’ b | Invalid RX_ID | P | N |
| ’00001101’ b | Invalid SEQ_ID | P | N |
| ’00001110’ b | Invalid DF_CTL | F | N |
| ’00001111’ b | Invalid SEQ_CNT | P | N |
| ’00010000’ b | Invalid Parameter field | P | N |
| ’00010001’ b | Exchange error | P | N |
| ’00010010’ b | Protocol error | P | N |
| ’00010011’ b | Incorrect length | B | N |
| ’00010100’ b | Unexpected ACK | P | N |
| ’00010101’ b | Class of service not supported by entity at hex 'FF FF FE' | F | R |
| ’00010110’ b | Login Required | B | R |
| ’00010111’ b | Excessive Sequences attempted | P | R |
| ’00011000’ b | Unable to Establish Exchange | P | R |
| ’00011001’ b | Reserved | P | N/A |
| ’00011010’ b | Fabric path not available | F | R |
| ’00011011’ b | Invalid VC_ID (Class 4) | F | N |
| ’00011100’ b | Invalid CS_CTL field | B | N |
| ’00011101’ b | Insufficient resources for VC (Class 4) | B | N |
| ’00011111’ b | Invalid class of service | B | N |
| ’00100000’ b | Preemption request rejected | F | N |
| ’00100001’ b | Preemption not enabled | F | N |
| ’00100010’ b | Multicast error | F | N |
| ’00100011’ b | Multicast error terminate | F | N |
| ’00100100’ b | Process login required | P | R |

Legend:
F = F_RJT (Fx_Port)
P = P_RJT (Nx_Port)
B = Both F_RJT and P_RJT
R = Retryable
N = Non-retryable

Copyright International Organization for Standardization
Provided by IHS under license with ISO
No reproduction or networking permitted without license from IHS Not for Resale

**Table 54 - Reject Reason Codes (Continued)**

| Encoded Value Word 5, bits 23 to 16 | Description | By | Action Code |
|---|---|---|---|
| '11111111' b | Vendor specific reject (See bits 7 to 0) | P | R |
| Others | Reserved | P | N/A |

Legend:
F = F_RJT (Fx_Port)
P = P_RJT (Nx_Port)
B = Both F_RJT and P_RJT
R = Retryable
N = Non-retryable

If a frame within a Sequence is rejected, the Sequence shall be abnormally terminated or aborted. If an $EOF_t$ or $EOF_{dt}$ ends the RJT frame, the FC_Port transmitting the RJT frame has terminated the Sequence. An FC_Port shall only terminate the Sequence using a Reject with an $EOF_{dt}$ in response to a connect-request ($SOF_{c1}$). In Class 2 an FC_Port shall only terminate the Sequence on a Reject in response to an interlocked Data frame associated with X_ID assignment ($SOF_{i2}$). If an $EOF_n$ ends the RJT frame, the FC_Port receiving the RJT frame shall perform the Abort Sequence protocol to abort the Sequence. Rejects shall only be transmitted in response to valid frames.

#### 11.2.3.4.3.2 Invalid D_ID

F_RJT - the Fabric is unable to locate the destination Nx_Port address.

P_RJT - the Nx_Port that received this frame does not recognize the D_ID as its own Identifier.

#### 11.2.3.4.3.3 Invalid S_ID

F_RJT - the S_ID does not match the N_Port_ID assigned by the Fabric.

P_RJT - the destination Nx_Port does not recognize the S_ID as valid.

#### 11.2.3.4.3.4 Nx_Port not available, temporary

F_RJT - The Nx_Port specified by the D_ID is a valid destination address but the Nx_Port is not functionally available (e.g., the Nx_Port is online and may be performing a Link Recovery Protocol).

#### 11.2.3.4.3.5 Nx_Port not available, permanent

F_RJT - The Nx_Port specified by the D_ID is a valid destination address but the Nx_Port is not functionally available. The Nx_Port is Offline or Powered Down.

#### 11.2.3.4.3.6 Class not supported

F_RJT or P_RJT - The class specified by the SOF delimiter of the frame being rejected is not supported.

#### 11.2.3.4.3.7 Delimiter usage error

F_RJT or P_RJT - The SOF or EOF is not appropriate for the current conditions (e.g., a frame started by $SOF_{c1}$ is received while a Class 1 dedicated connection already exists with the same Nx_Port). See tables 42 and 46 for allowable delimiters by class.

Copyright International Organization for Standardization
Provided by IHS under license with ISO
No reproduction or networking permitted without license from IHS Not for Resale

#### 11.2.3.4.3.8 TYPE not supported

F_RJT or P_RJT - The TYPE field of the frame being rejected is not supported by the FC_Port replying with the Reject frame.

#### 11.2.3.4.3.9 Invalid Link_Control

P_RJT - The command specified in the Information Category bits within R_CTL field in the frame being rejected is invalid or not supported as a Link_Control frame.

#### 11.2.3.4.3.10 Invalid R_CTL field

P_RJT - The R_CTL field is invalid or inconsistent with the other Frame_Header fields or conditions present.

#### 11.2.3.4.3.11 Invalid F_CTL field

P_RJT - The F_CTL field is invalid or inconsistent with the other Frame_Header fields or conditions present.

#### 11.2.3.4.3.12 Invalid OX_ID

P_RJT - The OX_ID specified is invalid or inconsistent with the other Frame_Header fields or conditions present.

#### 11.2.3.4.3.13 Invalid RX_ID

P_RJT - The RX_ID specified is invalid or inconsistent with the other Frame_Header fields or conditions present.

#### 11.2.3.4.3.14 Invalid SEQ_ID

P_RJT - The SEQ_ID specified is invalid or inconsistent with the other Frame_Header fields or conditions present.

#### 11.2.3.4.3.15 Invalid DF_CTL

P_RJT - The DF_CTL field is invalid.

#### 11.2.3.4.3.16 Invalid SEQ_CNT

P_RJT - The SEQ_CNT specified is inconsistent with the other Frame_Header fields or conditions present. A SEQ_CNT reject is not used to indicate out of order or missing Data frames (see 9.7 bits 5 to 4 (F_CTL Abort Sequence Condition)).

#### 11.2.3.4.3.17 Invalid Parameter field

P_RJT - The Parameter field is incorrectly specified or invalid.

#### 11.2.3.4.3.18 Exchange Error

P_RJT - An error has been detected in the identified Exchange (OX_ID). This could indicate Data frame transmission without Sequence Initiative or other logical errors in handling an Exchange.

#### 11.2.3.4.3.19 Protocol Error

P_RJT - This indicates that an error has been detected that violates the rules of FC-2 signalling protocol that are not specified by other error codes.

#### 11.2.3.4.3.20 Incorrect length

F_RJT or P_RJT - The frame being rejected is an incorrect length for the conditions present.

Copyright International Organization for Standardization
Provided by IHS under license with ISO
No reproduction or networking permitted without license from IHS Not for Resale

#### 11.2.3.4.3.21 Unexpected ACK

P_RJT - An ACK was received from an unexpected S_ID. The ACK received was not for an open Sequence or Exchange, but was received from a Logged-in Nx_Port (i.e., the EOF delimiter shall be $EOF_n$).

#### 11.2.3.4.3.22 Class of service not supported by entity at hex 'FF FF FE'

F_RJT - The class specified by the SOF delimiter of the frame being rejected is not supported by the Fx_Port (hex 'FF FF FE')

#### 11.2.3.4.3.23 Login Required

F_RJT or P_RJT - An Exchange is being initiated before the interchange of Service Parameters (i.e., Login) has been performed. The Fabric may issue F_RJT in order to notify an Nx_Port that a Login with the Fabric is required due to changes within the Fabric. The Fabric shall not issue F_RJT in order to convey Login status of a destination Nx_Port.

#### 11.2.3.4.3.24 Excessive Sequences attempted

P_RJT - A new Sequence was initiated by an Nx_Port that exceeded the capability of the Sequence Recipient as specified in the Service Parameters during Login.

#### 11.2.3.4.3.25 Unable to Establish Exchange

P_RJT - A new Exchange was initiated by an Nx_Port that exceeded the capability of the Responder facilities.

#### 11.2.3.4.3.26 Fabric path not available

F_RJT - The speed of the source and destination N_Ports do not match. Other Fabric characteristics related to multiple Fabric domains may also use this reason code.

#### 11.2.3.4.3.27 Invalid VC_ID (Class 4)

F_RJT - The VC_ID field is invalid.

#### 11.2.3.4.3.28 Invalid CS_CTL Field

F_RJT or P_RJT - The CS_CTL field is invalid.

#### 11.2.3.4.3.29 Insufficient resources for VC (Class 4)

F_RJT or P_RJT - The port sending the reject has insufficient resources for the VC.

#### 11.2.3.4.3.30 Invalid class of service

F_RJT or P_RJT - The class of service indicated by the SOF is invalid for the conditions present

#### 11.2.3.4.3.31 Preemption request rejected

F_RJT - The Preemption request is rejected (see 20.1.3)

#### 11.2.3.4.3.32 Preemption not enabled

F_RJT - Preemption Enable bit was not set to one during login (see 15.6.5.4.5)

Copyright International Organization for Standardization
Provided by IHS under license with ISO
No reproduction or networking permitted without license from IHS Not for Resale

#### 11.2.3.4.3.33 Multicast error

F_RJT - All multicast destination Nx_Ports responded with identical valid reject Link_Control Frames (see 23.3.4).

#### 11.2.3.4.3.34 Multicast error terminate

F_RJT - One or more destination Nx_Ports responded with an ACK, BSY, or RJT frame with an $EOF_{dt}$ delimiter (see 23.3.4).

#### 11.2.3.4.3.35 Vendor Specific Reject

F_RJT or P_RJT - The Vendor specific Reject bits (bits 7 to 0) may be used to specify vendor specific reason codes.

#### 11.2.3.4.3.36 Responses

F_RJT, P_RJT or F_BSY (except Class 4, when Class 4 circuit in Live State).

### 11.2.4 Link_Control commands

#### 11.2.4.1 Introduction

Link_Control commands are Link_Control frames that initiate a low-level action at the destination Nx_Port. These commands are limited in scope and are normally associated with functions such as reset. Link_Control commands do not require end-to-end Credit and do not participate in end-to-end flow control with regard to incrementing or decrementing Credit_CNT. Link_Control commands shall not be considered to be part of any existing Exchange or Sequence.

#### 11.2.4.2 Link Credit Reset (LCR)

##### 11.2.4.2.1 Description

The LCR frame shall indicate that the Nx_Port specified by the S_ID requests that the Nx_Port specified by the D_ID reset any buffers containing Data frames from the S_ID in order to allow the S_ID to reset its end-to-end Credit to its Login value. Both Nx_Ports abnormally terminate all active Sequences with the S_ID as Sequence Initiator and the D_ID as Sequence Recipient for all classes of service.

The Nx_Port specified by the S_ID shall perform Exchange and Sequence recovery at the discretion of the appropriate Upper Level Protocol. After transmitting the LCR frame, the Nx_Port that requested the Credit Reset shall wait R_A_TOV before initiating Sequences with the destination Nx_Port. The LCR frame shall not be transmitted as part of an existing Sequence or Exchange. All fields other than R_CTL, D_ID, and S_ID are reserved and ignored by the receiver except for CRC calculation.

Link Credit Reset shall only be transmitted in Class 2. See 21.2.4.4 for a discussion of end-to-end Credit loss in Class 2 resulting from Sequence timeout. Any Class 1, 3 and 6 Data frames in the destination Nx_Port buffers are also reset, although a dedicated connection, if present, is unaffected. Therefore, an Nx_Port should remove a dedicated connection prior to transmitting LCR in Class 2 to the same destination Nx_Port. LCR shall be transmitted with $SOF_{n2}$ and $EOF_n$.

If an Nx_Port is out of EE_Credit in Class 1 or 6 and times out all Sequences, it shall perform Connection Recovery (see 20.8). It shall not use LCR.

Class 4 behavior shall not be affected by LCR (see clause 25).

--`,,```,,,,````-`-`,,`,,`,`,,`---
Copyright International Organization for Standardization
Provided by IHS under license with ISO
No reproduction or networking permitted without license from IHS Not for Resale

#### 11.2.4.2.2 Protocol

a) LCR
b) No reply frame

#### 11.2.4.2.3 Request Sequence

**Format:** FT_0

**Addressing:** The S_ID field designates the Nx_Port that is requesting a buffer reset by the destination Nx_Port or D_ID.

#### 11.2.4.2.4 Responses

The possible responses are:

a) R_RDY Primitive ($SOF_{n2}$)
b) F_RJT, P_RJT
c) F_BSY (except Class 4)

NOTE F_RJT may be returned for any of the reasons allowed by the Fabric. P_RJT is only returned for "Invalid D_ID" or "Class not supported" in order to allow an Nx_Port to avoid special casing LCR in Class 2. However, the Nx_Port transmitting LCR should be aware of possibility of F_RJT or P_RJT in order to avoid end-to-end Credit_CNT problems. In particular, the zero values of OX_ID, RX_ID, SEQ_ID, and SEQ_CNT should be noted for possible conflict with an existing Exchange.

### 11.2.4.3 End (END)

#### 11.2.4.3.1 Description

The END Link_Control command is used by the QOSF in Class 4 to deactivate or remove a Class 4 circuit initiated by the fabric.

The Class 4 circuit is removed if the EOF delimiter is $EOF_{rt}$ or $EOF_{rti}$. The Class 4 circuit is deactivated if the EOF delimiter is $EOF_{dt}$ or $EOF_{dti}$. The END Link_Control frame shall be discarded if the EOF delimiter is $EOF_{n}$, $EOF_{t}$, $EOF_{ni}$, $EOF_{a}$ or if the end of frame delimiter is missing. Upon the reception of the END Link_Control frame all active Sequences between the communicating N_Ports, using the Class 4 circuit are abnormally terminated.

The communicating Nx_Ports, at the discretion of the appropriate Upper Level protocol, shall perform Exchange and Sequence recovery.

N_Ports shall use the END Link_Control frame to remove or deactivate a Class 4 circuit if the N_Port is unable to determine the state of the Class 4 circuit.

The Fabric shall send the END Link_Control command to remove Class 4 circuits when:

a) Fabric Relogin is attempted,
b) N_Port or the F_Port enters the Offline State,
c) Link failure is detected at the N_Port,
d) error recovery for the setup process (see 25.3.5.2), or
e) internal Fabric failures of the Class 4 circuit path are detected (i.e., the Fabric is unable to provide the guaranteed quality of service).

The Fabric shall send the END Link_Control command to both N_Ports in the Class 4 circuit, unless prevented (e.g., by Link failure, Offline).

The END Link_Control frame shall have no Payload and shall be sent only in Class 1, 2 or 4.

--`,,```,,,,````-`-`,,`,,`,`,,`---

Copyright International Organization for Standardization
Provided by IHS under license with ISO
No reproduction or networking permitted without license from IHS Not for Resale

#### 11.2.4.3.2 Protocol

a) END
b) No reply frame

#### 11.2.4.3.3 Request Sequence

**Format:** FT_0

**Addressing:** The D_ID field shall designate the Nx_Port receiving the END Link_Control frame. In Class 4, the S_ID and VC_ID field shall designate the N_Port on whose behalf the QoSF is transmitting the END command.

#### 11.2.4.3.4 Reply Sequence

None

## 11.3 ACK generation assistance

### 11.3.1 Introduction

If a Sequence Recipient supports multiple ACK forms, an indication about the required ACK form by the Sequence Initiator as indicated during Login may be of assistance to the Sequence Recipient in generating it. This shall be done in accordance with table 47. See 15.6.5.5.3 and 15.6.5.6.2 for definition of the login bits referenced in table 47.

### 11.3.2 N_Port Login

#### 11.3.2.1 Capability Indicator

The ACK generation assistance capability is indicated during N_Port Login in word 0, bit 9 of Nx_Port Class Service Parameters.

The Initiator Control Flags are specified in 15.6.5.5.

### 11.3.3 Applicability

The ACK precedence determined during Login is applicable to all Class 1 and 6 Data frames, Class 2 Data frames, and connect-request frames.

ACK_Form is meaningful on all Class 1, 2, 4 or 6 Data frames of a Sequence and on all connect-request frames. ACK_Form is not meaningful on Class 1, 2, 4 or 6 Link_Control frames or any Class 3 frames.

### 11.3.4 F_CTL bits

F_CTL Bits 13 to 12 (ACK_Form field) are set by Sequence Initiator to provide an optional assistance to the Sequence Recipient by indicating in this F_CTL field (see table 31) its ACK capability determined during N_Port Login.

### 11.3.5 Login rules

Only ACK_1 shall be used during or before the establishment of Login parameters. Additional rules are specified for ACK_Form field usage during these conditions:

a) In Classes 1 and 2, ACK_1 shall be used to acknowledge PLOGI and FLOGI and the corresponding LS_ACC. This rule shall be followed whether FLOGI or PLOGI and the corresponding LS_ACC flow in the same Class 1 connection or two separate connections.

Copyright International Organization for Standardization
Provided by IHS under license with ISO
No reproduction or networking permitted without license from IHS Not for Resale

b) If Class 1 is used for FLOGI or PLOGI and the corresponding LS_ACC, ACK_1 shall be used including the $SOF_{c1}$ frame. This rule shall be followed whether FLOGI or PLOGI and the corresponding LS_ACC flow in the same Class 1 connection or two separate connections.
c) If ACK generation assistance is not provided, the ACK_Form field shall be set to ’00’ b on the FLOGI or PLOGI frame and the corresponding LC_ACC frame.
d) If ACK generation assistance is provided, the ACK_Form field shall be set to ’01’ b on the FLOGI or PLOGI frame and the corresponding LC_ACC frame.
e) Once established, the ability or inability to provide ACK generation assistance shall not change until logout or Relogin occurs.

### 11.3.6 ACK_Form errors

If a Sequence Recipient receives an ACK_Form value that it does not support, it shall issue a P_RJT with the reason code "Protocol error".

Copyright International Organization for Standardization
Provided by IHS under license with ISO
No reproduction or networking permitted without license from IHS Not for Resale

# 12 Link Services

## 12.1 Sequence and Exchange management

Link Service frames and Sequences are composed of Link_Data frames and shall operate according to the R_RDY Primitive, ACK, and Link_Response rules specified in Clause 11.

Basic Link Service commands consist of only a single Basic Link_Data frame and are interspersed or are part of a Sequence for an Exchange performing a specific protocol other than Basic Link Service. In such cases, the Basic Link Service command does not constitute a separate Information Category in specifying the number of Information Categories in a Sequence as a Login parameter. Basic Link Service commands support low-level functions (e.g., passing control bit information in a NOP, or aborting a Sequence using ABTS). Login shall not be required prior to using Basic Link Service commands.

The protocols supported by the ELSs are performed within a single Exchange, intended exclusively for the purpose of ELS processing. Most of ELS protocols are performed as a two Sequence Exchange. Each of these two Sequence Exchanges consists of a Request Sequence by the Originator, transfer of Sequence Initiative, and a reply Sequence from the Responder that terminates the Exchange by setting the Last_Sequence bit (bit 20) in F_CTL.

The Sequence Initiator and Sequence Recipient shall follow the rules for Sequence management and Recovery_Qualifier reuse as specified in clause 17. The following rules regarding Sequence and Exchange management apply to ELSs in addition to the rules specified in clause 17:

a) Reply frames and Sequences shall be transmitted in the same class as the request.
b) Request and Reply Sequences shall be sent in Class 1, Class 2, Class 3 and Class 4.

NOTE Not all of the above classes make sense for all ELSs, but there is no restriction. Class 6 makes no sense for most ELSs, but there is no restriction.

c) If Login has not been completed successfully, the default Login values shall be used. Since Concurrent Sequences is limited to one, originating a second Exchange to perform an ELS (e.g., Read Exchange Status) is not possible. Therefore, ABTS is the preferred recovery action.
d) If Login has completed successfully, the Originator of the Exchange shall use the Discard multiple Sequences Error Policy for all ELS Exchanges.
e) If the Exchange Originator of an ELS Exchange detects an Exchange error, it shall abort the Exchange using ABTX and retry the protocol of the aborted Exchange with a different Exchange.
f) If the Sequence Initiator aborts a Sequence using ABTS due to receiving an ACK with the Abort Sequence bits (5 to 4) set to '01' b, the Sequence Initiator shall retry the Sequence after the BA_ACC is received for the aborted Sequence one time only. If the retry fails, the ELS Exchange shall be aborted using ABTX.
g) If the Sequence Initiator attempts to abort a Sequence using ABTS and it detects an E_D_TOV waiting for the ACK frame in response to the ABTS, it shall abort the Exchange using ABTX, if conditions permit, and retry with a different Exchange.

## 12.2 Basic Link Service commands

### 12.2.1 Introduction

Nx_Ports shall support all Basic Link Service commands.

Since DF_CTL bits are not meaningful on Basic Link_Data frames, Basic Link Service frames shall not contain optional headers.

The R_CTL field shall be set as defined in table 55 to indicate Basic Link Service commands.

The TYPE field (Word 1 bits 31 to 24) shall be set to zero.

--`,,```,,,,````-`-`,,`,,`,`,,`---

Copyright International Organization for Standardization
Provided by IHS under license with ISO
No reproduction or networking permitted without license from IHS Not for Resale

For any Basic Link Service response, if the request is carried on a Class 4 circuit, the VC_ID field shall contain the appropriate CIVC_ID or CRVC_ID value.

The timeout for a Basic Link Service shall be 2 times R_A_TOV.

**Table 55 - Basic Link Service Information Categories**

| R_CTL | | Description | Abbreviation |
|---|---|---|---|
| ROUTING | INFORMATION | | |
| '1000' b | '0000' b | No Operation | NOP (see 12.2.5) |
| | '0001' b | Abort Sequence | ABTS (see 12.2.2) |
| | '0010' b | Remove Connection | RMC (see 12.2.6) |
| | '0100' b | Basic_Accept | BA_ACC (see 12.2.3) |
| | '0101' b | Basic_Reject | BA_RJT (see 12.2.4) |
| | '0110' b | Dedicated Connection Preempted | PRMT (see 12.2.7) |
| | Others | Reserved | |

### 12.2.2 Abort Sequence (ABTS)

#### 12.2.2.1 Overview

The ABTS frame shall be used by the Sequence Initiator

a) to request that the Sequence Recipient abort one or more Sequences (see 12.2.2.2 and 21.7.2.2).
b) or Sequence Recipient to request that the ABTS Recipient abort the entire Exchange (see 12.2.2.3).

The decision to attempt to abort one or more Sequences may be determined by the Sequence Initiator (Sequence timeout) or the Sequence Recipient (ACK frame Abort Sequence Condition bits 5 to 4 or P_RJT frame).

The Sequence Initiator may optionally require that the Sequence Recipient abort one or more sequences by setting bit 0 of the parameter field to one. If the parameter field bit 0 is set to zero, the Sequence Recipient may elect to abort one or more Sequences or elect to abort the entire Exchange in a protocol specific manner.

The Sequence Recipient may request that one or more Sequences in progress be aborted by setting the Abort Sequence Condition bits to a value of ’01’ b on an ACK frame (see 9.7.14). The ABTS frame may be transmitted without regard to which Nx_Port holds, or may hold, the Sequence Initiative.

Whether a sequence or exchange is aborted shall be based on the value of bit 0 in the parameter field. = Bit 0 of the parameter field shall be as specified in table 56.

**Table 56 - ABTS Parameter Field Definitions**

| Parameter Field, bit 0 Value | Meaning |
|---|---|
| 0 | Abort Exchange |
| 1 | Abort Sequence |

Copyright International Organization for Standardization
Provided by IHS under license with ISO
No reproduction or networking permitted without license from IHS Not for Resale

#### 12.2.2.2 Aborting Sequences using ABTS

##### 12.2.2.2.1 Introduction

When aborting sequences using ABTS:

a) none, one or multiple Sequences are aborted;
b) ABTS is transmitted by the Sequence Initiator of the last Sequence; and
c) ABTS is transmitted as part of the open Sequence.

The SEQ_ID of ABTS frame shall match the SEQ_ID of the last Sequence transmitted by the Sequence Initiator of the ABTS frame. Since ABTS is a continuation of the last transmitted Sequence, it shall be transmitted in the same class. Since Sequences shall not be streamed in more than one class, the class in which the ABTS is transmitted shall be the same class in which an error, if any, occurred. The RX_ID and OX_ID specified in the ABTS Frame_Header shall be associated with the Exchange in which the Sequence Initiator has detected a potential error.

F_CTL bits, (e.g., First_Sequence), shall be set to match previous Data frames within this Sequence since the ABTS frame is part of the Sequence. F_CTL bits for Sequence Initiative (bit 16) and End_Sequence (bit 19) shall be set to one in order to transfer Sequence Initiative.

##### 12.2.2.2.2 ABTS Initiator

Since ABTS is used for error recovery, the following relaxed behaviors are allowed. An ABTS Initiator may transmit ABTS, even if

a) there is no end-to-end Credit available,
b) it does not hold the Sequence Initiative,
c) there is no Sequence open,
d) maximum number of Concurrent Sequences supported are in use, and
e) it is a Connection Recipient in Unidirectional Class 1 Connection.

After transmitting the ABTS frame, an Nx_Port shall consider the status of the Exchange in which it was transmitted to be in an indeterminate condition and shall not deliver any Sequences or notification of Sequence delivery to an upper level until the BA_ACC is received, processed, and recovery, if any, is performed. Due to out of order delivery and special ACK transmission rules, an ACK to a Data frame within a Recovery_Qualifier range may mislead the Sequence Initiator of the ABTS prior to reception of the BA_ACC.

NOTE The ABTS frame may be transmitted after a Sequence timeout. The Sequence Initiator of the ABTS frame should reset the E_D_TOV and R_A_TOV timers when the ABTS frame is transmitted, just as any other Data frame transmitted for a Sequence.

##### 12.2.2.2.3 ABTS Recipient

When the ABTS Request frame is received, the Sequence Recipient may abort no Sequences, one Sequence, or multiple Sequences based on the status of each Sequence within an Exchange and the Exchange Error Policy (see 21.6.3). After receiving the ABTS frame, the Recipient shall determine a range of SEQ_CNT values found in error, if any, associated with the identified Exchange. Data frames for any deliverable Sequences (see 4.12.4) may be processed after the ABTS frame is received based on the policy for the Exchange, but before the BA_ACC is transmitted.

Transmission of the BA_ACC to the ABTS frame is an atomic function in that any Data frames identified in the Recovery_Qualifier range (identified in the BA_ACC Payload) shall be discarded after the BA_ACC is transmitted to the Sequence Initiator. The BA_ACC provides a synchronization point between the Sequence Initiator and Sequence Recipient. The ABTS Sequence Recipient is not required to timeout waiting for any missing frames before transmitting the BA_ACC. The ABTS Sequence Recipient shall set F_CTL bit 16 to zero in the BA_ACC to indicate that it holds the Sequence Initiative for the Exchange or set it to one to indicate that the ABTS Sequence

Copyright International Organization for Standardization
Provided by IHS under license with ISO
No reproduction or networking permitted without license from IHS Not for Resale

Initiator holds the Sequence Initiative.

The format of the BA_ACC Payload is shown in table 57. The SEQ_ID, if indicated as valid, shall be the last deliverable Sequence transmitted by the Sequence Initiator (of ABTS). If the SEQ_ID is indicated as invalid, then the Sequence Recipient has no information on the last deliverable Sequence. The low SEQ_CNT value shall be equal to the SEQ_CNT of the last Data frame of the last deliverable Sequence. The high SEQ_CNT value shall be equal to the SEQ_CNT of the ABTS frame.

In the BA_ACC Payload, if the low SEQ_CNT equals high SEQ_CNT and the last valid SEQ_ID in the BA_ACC matches the last Sequence that was transmitted, then no Sequences have been aborted (i.e., all were deliverable), no Recovery_Qualifier is identified, and no recovery is required. If the low SEQ_CNT is not equal to the high SEQ_CNT or the last SEQ_ID is not the last Sequence transmitted, then at least one Sequence is in error.

#### 12.2.2.2.4 Recovery Qualifier

If the ABTS frame was transmitted in Class 1 or 6, there shall be no Recovery_Qualifier. The Sequence Initiator of the ABTS frame may reuse SEQ_IDs at its discretion following the normal rules for SEQ_ID and SEQ_CNT and there is no timeout required.

If the ABTS frame was transmitted in Class 2, 3 or 4 and a Sequence error has been indicated, a Recovery_Qualifier range shall be established for both Nx_Ports. If a Recovery_Qualifier exists, the Sequence Initiator of the ABTS frame shall discard ACK and Link_Response frames received that correspond to the Recovery_Qualifier between the low and high SEQ_CNT values. After transmission of the BA_ACC to the ABTS frame the Sequence Recipient of the ABTS frame shall discard Data frames received that correspond to the Recovery_Qualifier between the low and high SEQ_CNT values if a Recovery_Qualifier exists. While the Recovery_Qualifier exists, the Sequence Initiator shall not transmit Data frames for the Recovery_Qualifier within the specified low and high SEQ_CNT values.

If a Recovery_Qualifier has been established, based on the BA_ACC Payload, the Sequence Initiator of the ABTS shall issue a Reinstate Recovery Qualifier (RRQ) ELS Request Sequence after waiting an R_A_TOV timeout period after reception of the BA_ACC (see 12.3.2.14).

After the BA_ACC has been transmitted and the Sequence status has been posted in the Exchange Status Block as Aborted, if the Sequence Recipient receives any Data frames for the Aborted Sequence or Aborted Sequences (based on Recovery_Qualifier range), the frames shall be discarded. See 21.7.2 and 21.2.4 for more discussion on abnormal termination of Sequences and Sequence timeout. See 21.2.7.2 for examples of the ABTS protocol that include several special cases (e.g., the start of an Exchange and Class 3). Additional information regarding Sequence recovery and the effects of ABTS based on different Exchange Error Policies is also discussed.

Following reception of the BA_ACC to the Abort Sequence frame, the Sequence Initiator may perform Sequence recovery under guidance from the appropriate FC-4.

#### 12.2.2.2.5 Protocol

a) Abort Sequence Request frame
b) BA_ACC or BA_RJT Reply frame

#### 12.2.2.2.6 Request Sequence

**Format:** FT_1

**Addressing:** The D_ID field designates the Sequence Recipient Nx_Port. The S_ID field designates the source Sequence Initiator Nx_Port that is requesting that a Sequence or Sequences be aborted.

**X_ID:** Both the RX_ID and OX_ID shall correspond to the current values as determined by the Sequence Initiator of the ABTS frame.

Copyright International Organization for Standardization
Provided by IHS under license with ISO
No reproduction or networking permitted without license from IHS Not for Resale

**SEQ_ID and SEQ_CNT:** The SEQ_ID shall be the same as the last Sequence transmitted for this Exchange by the Nx_Port transmitting ABTS, even if the last Data frame has been transmitted. The SEQ_CNT shall be set to a value one greater than the previous Data frame transmitted, indicating the highest SEQ_CNT transmitted for this SEQ_ID and the highest SEQ_CNT for this range of SEQ_CNTs over multiple Sequences.

**Payload:** The Abort Sequence Basic Link Service command has no Payload.

#### 12.2.2.2.7 Reply Sequence

**BA_RJT:** BA_RJT signifies rejection of the ABTS command, however, the Sequence may have been aborted without Sequence information (see 12.2.4).

The SEQ_ID, if indicated as valid, shall be the last deliverable Sequence transmitted by the Sequence Initiator. If the SEQ_ID is indicated as invalid, then the Sequence Recipient has no information on the last deliverable Sequence.

**BA_ACC:** BA_ACC signifies that the destination Nx_Port has aborted and discarded no Sequences, one Sequence, or multiple Sequences.

The high SEQ_CNT shall be equal to the SEQ_CNT of the ABTS frame. The low SEQ_CNT value shall be one of the following:

a) same as SEQ_CNT of the ABTS frame
b) equal to the SEQ_CNT of the last Data frame of the last deliverable Sequence
c) set to hex '00 00'.

The Payload is specified for each of the permitted cases:

a) To indicate that the current Sequence in which ABTS has been received is the last deliverable Sequence, and no Sequences are aborted at its end, the Sequence Recipient shall set, in the BA_ACC Payload:
   A) SEQ_ID Validity equal valid (hex '80')
   B) SEQ_ID equal the SEQ_ID of the Sequence in which the ABTS has been received from the Sequence Initiator
   C) Low SEQ_CNT equal High SEQ_CNT equal SEQ_CNT of the ABTS frame
b) To indicate that it has the information on the last deliverable Sequence but one or more Sequences are aborted at its end, the Sequence Recipient shall set, in the BA_ACC Payload:
   A) SEQ_ID Validity equal valid (hex '80')
   B) SEQ_ID equal the SEQ_ID of the last deliverable Sequence received from the Sequence Initiator but is not equal to the SEQ_ID of the Sequence in which ABTS frame has been received,
   C) Low SEQ_CNT equal the SEQ_CNT of the last Data frame of the last deliverable Sequence
   D) High SEQ_CNT equal the SEQ_CNT of the ABTS frame
c) To indicate that it has no information on the last deliverable Sequence, and one or more Sequences are aborted at its end, the Sequence Recipient shall set, in the BA_ACC Payload, independent of continuously increasing SEQ_CNT use:
   A) SEQ_ID Validity equal invalid (hex '00')
   B) SEQ_ID equal invalid in this case
   C) Low SEQ_CNT equal hex '00 00'
   D) High SEQ_CNT equal the SEQ_CNT of the ABTS frame.

### 12.2.2.3 Aborting Exchanges using ABTS

#### 12.2.2.3.1 Introduction

Using ABTS to abort an Exchange is specified in this section. In this method,

a) an entire Exchange is aborted;
b) ABTS is transmitted by the Sequence Initiator or the Sequence Recipient of the last Sequence; and

Copyright International Organization for Standardization
Provided by IHS under license with ISO
No reproduction or networking permitted without license from IHS Not for Resale

c) ABTS is transmitted as part of the open Sequence or in a new Sequence.

#### 12.2.2.3.2 ABTS sent by the last Sequence Initiator in an open Sequence

If the last Sequence is open and the Sequence Initiator of the last Sequence transmits the ABTS frame, the SEQ_ID of this ABTS frame shall match the SEQ_ID of the last Sequence transmitted by the last Sequence Initiator. The SEQ_CNT of the ABTS frame shall be one greater than the SEQ_CNT of the last Data frame transmitted for this last Sequence.

#### 12.2.2.3.3 ABTS sent by the last Sequence Initiator in a new Sequence

If the last Sequence has been completed and is therefore not open, and the Sequence Initiator of the last Sequence transmits the ABTS frame, the ABTS shall be transmitted in a new Sequence with a valid SEQ_ID not in use at that time.

#### 12.2.2.3.4 ABTS sent in an open or new Sequence

Since ABTS is a continuation of the last transmitted Sequence, it shall be transmitted in the same class. Since Sequences shall not be streamed in more than one class, the class in which the ABTS is transmitted shall be the same class in which an error, if any, occurred. The RX_ID and OX_ID specified in the ABTS Frame_Header shall be associated with the Exchange in which the Sequence Initiator has detected a potential error.

F_CTL bits for Sequence Initiative (bit 16) and End_Sequence (bit 19) shall be set to one in order to transfer Sequence Initiative. If the ABTS frame is part of the last Sequence, F_CTL bits (e.g., First_Sequence) shall be set to match previous Data frames within this Sequence. If the ABTS is transmitted in a new Sequence, F_CTL bits shall be set to match the new Sequence.

#### 12.2.2.3.5 ABTS by the last Sequence Recipient

If the last Sequence Recipient transmits an ABTS frame, it shall transmit ABTS in a new Sequence with a SEQ_ID available for use from its Nx_Port as the Sequence Initiator. The new Sequence shall follow applicable rules for the Sequence. The class in which the ABTS is transmitted shall be the same class in which an error, if any, occurred. The RX_ID and OX_ID specified for the new Sequence shall be associated with the Exchange in which the Sequence Recipient has detected a potential error.

If the Sequence Initiator has not transferred the Sequence Initiative or has transferred the Sequence Initiative but has not received the confirmation, but receives the ABTS frame then the Sequence Initiator shall abort the Exchange. Aborting the Exchange may be performed by one of the following two methods specified:

On receiving the ABTS, the ABTS Recipient may set

a) the Last_Sequence bit to one in BA_ACC or
b) the Last_Sequence bit to zero in BA_ACC followed by ABTX command.

NOTE If the Sequence Initiator has transferred the Sequence Initiative, received the confirmation but receives ABTS, then it is treated as the ABTS sent by the new Sequence Initiator and the corresponding rules are followed.

#### 12.2.2.3.6 Request Sequence

**Format:** FT_1

**Addressing:** The D_ID field designates the ABTS Recipient Nx_Port. The S_ID field designates the ABTS Initiator Nx_Port that is requesting that an Exchange be aborted.

**X_ID:** Both the RX_ID and OX_ID shall correspond to the current values as determined by the Sequence Initiator of the ABTS frame.

Copyright International Organization for Standardization
Provided by IHS under license with ISO
No reproduction or networking permitted without license from IHS Not for Resale

**SEQ_ID and SEQ_CNT:** If the Sequence Initiator is the ABTS initiator and a Sequence is open, the SEQ_ID shall be the same as the last Sequence transmitted for this Exchange by the Nx_Port transmitting ABTS, even if the last Data frame has been transmitted. The SEQ_CNT shall be set to a value one greater than the previous Data frame transmitted, indicating the highest SEQ_CNT transmitted for this SEQ_ID and the highest SEQ_CNT for this range of SEQ_CNTs over multiple Sequences.

If the Sequence Initiator is the ABTS Initiator and no Sequence is open, the SEQ_ID shall be a new valid value unused at that time and the SEQ_CNT shall be either continuously increasing from the latest Data frame transmitted in the last Sequence or binary zero.

If the Sequence Recipient is the ABTS Initiator, the SEQ_ID shall be a new valid value unused at that time by that Nx_Port as a Sequence Initiator and the SEQ_CNT shall be either continuously increasing from the latest Data frame transmitted in the last Sequence or binary zero.

**Payload:** The Abort Sequence Basic Link Service command has no Payload.

#### 12.2.2.3.7 Reply Sequence

**BA_RJT:** BA_RJT signifies rejection of the ABTS command, however, the Exchange may have been aborted without Sequence information (see 12.2.4).

**BA_ACC:** BA_ACC signifies that the destination Nx_Port has aborted and discarded no Sequences, one Sequence, multiple Sequences, or the entire Exchange.

The SEQ_ID, if indicated as valid, shall be the last deliverable Sequence received from the Sequence Initiator. If the SEQ_ID is indicated as invalid, then the Sequence Recipient has no information on the last deliverable Sequence. To abort an Exchange, the Last_Sequence bit shall be set to 1 and Low SEQ_CNT shall be hex '00 00' and High SEQ_CNT hex 'FF FF'.

The BA_ACC Payload is shown in table 57. The Payload is specified for each of the permitted cases:

a) To indicate that it has the information on the last deliverable Sequence, and nothing is aborted at its end, the ABTS Recipient shall set, in the BA_ACC Payload:
   A) SEQ_ID Validity = valid (hex '80')
   B) SEQ_ID = the SEQ_ID of the last deliverable Sequence received from the ABTS Initiator, and
   C) Low SEQ_CNT = High SEQ_CNT = SEQ_CNT of ABTS frame

**Table 57 - BA_ACC Payload**

| Bits / Word | 31 .. 24 | 23 .. 16 | 15 .. 08 | 07 .. 00 |
|---|---|---|---|---|
| **0** | SEQ_ID Validity<br>hex ’80’ = valid<br>hex ’00’ = invalid | SEQ_ID of last Sequence deliverable to ULP<br>(if valid indicated) | Reserved | |
| **1** | OX_ID | | RX_ID | |
| **2** | Low SEQ_CNT | | High SEQ_CNT | |

b) To indicate that it has no information on the last deliverable Sequence, and it is aborting the entire Exchange, the ABTS Recipient shall set the Last_Sequence F_CTL bit to one and shall set, in the BA_ACC Payload:
   A) SEQ_ID Validity = invalid (hex '00'),
   B) SEQ_ID = invalid in this case
   C) Low SEQ_CNT = hex '00 00' and
   D) High SEQ_CNT = hex 'FF FF'

Copyright International Organization for Standardization
Provided by IHS under license with ISO
No reproduction or networking permitted without license from IHS Not for Resale

c) To indicate that it has information on the last deliverable Sequence, but it is aborting the entire Exchange due to uncertainty (e.g., Sequence Initiative ownership or lack of its capability to resolve the conflict), the ABTS Recipient shall set the Last_Sequence F_CTL bit to 1 and shall set, in the BA_ACC Payload:
   A) SEQ_ID Validity = valid (hex '80')
   B) SEQ_ID = the SEQ_ID of the last deliverable Sequence received from the ABTS Initiator,
   C) Low SEQ_CNT = hex '00 00' and
   D) High SEQ_CNT = hex 'FF FF'

### 12.2.3 Basic Accept (BA_ACC)

#### 12.2.3.1 Description

BA_ACC is a single frame Link Service Reply Sequence that notifies the transmitter of a Basic Link Service Request frame that the request has been completed. The BA_ACC Link Service Reply Sequence shall transfer the Sequence Initiative by setting the Sequence Initiative bit (Bit 16) to one in F_CTL on the last Data frame of the Reply Sequence if the Sequence Initiative for the Exchange is held by the transmitter of the ABTS frame. The Sequence Initiative (Bit 16) shall be set to zero to indicate that the transmitter of the BA_ACC holds the Sequence Initiative for the Exchange. The OX_ID and RX_ID shall be set to match the Exchange in which the ABTS frame was transmitted. The SEQ_ID shall be assigned following the normal rules for SEQ_ID assignment.

#### 12.2.3.2 Protocol

BA_ACC is the Reply Sequence to Abort Sequence Basic Link Service command.

#### 12.2.3.3 Request Sequence

**Format:** FT_1

**Addressing:** The D_ID field designates the source of the Link Service frame being accepted while the S_ID field designates the destination of the request Data frame Sequence being accepted.

**Payload:** The Payload content is defined within individual Basic Link Service command (ABTS).

#### 12.2.3.4 Reply Sequence

none

### 12.2.4 Basic Reject (BA_RJT)

#### 12.2.4.1 Description

BA_RJT is a single frame Link Service Reply Sequence that notifies the transmitter of a Basic Link Service Request frame that the request has been rejected. A four-byte reason code is contained in the Payload. Basic Reject may be transmitted for a variety of conditions that may be unique to a specific Basic Link Service Request. The OX_ID and RX_ID shall be set to match the Exchange in which the Basic Link Service Request frame was transmitted. The SEQ_ID shall be assigned following the normal rules for SEQ_ID assignment.

The first error condition detected shall be the error reported.

#### 12.2.4.2 Protocol

BA_RJT may be a Reply Sequence to ABTS.

#### 12.2.4.3 Request Sequence

**Format:** FT_1

--`,,```,,,,````-`-`,,`,,`,`,,`---

Copyright International Organization for Standardization
Provided by IHS under license with ISO
No reproduction or networking permitted without license from IHS Not for Resale

**Addressing:** The D_ID field designates the source of the Basic Link Service Request being rejected while the S_ID field designates the destination of the request Data frame Sequence being rejected.

**Payload:** The first word of the Payload shall contain four bytes to indicate the reason for rejecting the request (see tables 58, 59 and 60).

#### 12.2.4.4 Reply Sequence

none

**Table 58 - BA_RJT Payload Format**

| Bits | Value |
|---|---|
| 31 to 24 | Reserved |
| 23 to 16 | Reason Code (see table 59) |
| 15 to 8 | Reason Explanation (see table 60) |
| 7 to 0 | Vendor Unique Code |

**Table 59 - BA_RJT reason codes**

| Encoded Value (Bits 23 to 16) | Name | Description |
|---|---|---|
| ’00000001’ b | Invalid command code | The Command code in the Sequence being rejected is invalid. |
| ’00000011’ b | Logical error | The request identified by the Command code is invalid or logically inconsistent for the conditions present. |
| ’00000101’ b | Logical busy | The Basic Link Service is logically busy and unable to process the request at this time. |
| ’00000111’ b | Protocol error | This indicates that an error has been detected that violates the rules of FC-2 protocol that are not specified by other error codes. |
| ’00001001’ b | Unable to perform command request | The Recipient of a Link Service command is unable to perform the request at this time. |
| Others | Reserved | The Vendor specific error bits may be used to specify vendor unique reason codes. |
| ’111111111’ b | Vendor specific error (see bits 7 to 0) | |

--`,,```,,,,````-`-`,,`,,`,`,,`---

Copyright International Organization for Standardization
Provided by IHS under license with ISO
No reproduction or networking permitted without license from IHS Not for Resale

**Table 60 - BA_RJT Reason Code Explanation**

| Encoded Value (Bits 15 to 8) | Description | Applicable commands |
|---|---|---|
| ’00000000’ b | No additional explanation | ABTS |
| ’00000011’ b | Invalid OX_ID-RX_ID combination | ABTS |
| ’00000101’ b | Sequence aborted, no sequence information provided | ABTS |
| Others | Reserved | |

### 12.2.5 No Operation (NOP)

#### 12.2.5.1 Description

The NOP Basic Link Service frame shall be used with delimiters appropriate to the class in which it is being used. The Data_Field of a NOP frame shall be of zero size. However, the F_CTL field and the SOF and EOF delimiters shall be examined and the appropriate action shall be taken by both the Nx_Port and Fabric, if present. A NOP frame may be used to initiate a Class 1 or 6 Connection using $SOF_{c1}$, initiate Sequences, terminate Sequences, or terminate Class 1 or 6 Connections in place of a normal Data frame when there is no Data to send. When used to remove Class 1 or 6 Connections, NOP shall use the normal remove connection procedure by using the E_C bit (see 20.4.3).

The OX_ID and RX_ID shall be set to match the Exchange in which the NOP is being transmitted. The SEQ_ID shall be assigned following the normal rules for SEQ_ID assignment.

#### 12.2.5.2 Protocol

a) No Operation Request
b) No Reply frame

#### 12.2.5.3 Request Sequence

**Format:** FT_1

**Addressing:** The D_ID field designates the destination of the frame while the S_ID field designates the source of the frame.

**Payload:** The NOP Basic Link Service command has no Payload.

#### 12.2.5.4 Reply Sequence

none

### 12.2.6 Remove Connection (RMC)

#### 12.2.6.1 Description

The RMC Basic Link Service frame shall be used to request immediate removal of a Class 1 or 6 Connection. An ACK frame ended by $EOF_{dt}$ shall be transmitted in response. This protocol overrides the normal negotiated remove connection procedure using the E_C bit in F_CTL. This method should not be used as the normal method to remove Class 1 or Class 6 Connections since all open Sequences shall be abnormally terminated. See 20.4.3 for specific rules on removing connections.

The OX_ID and RX_ID shall be set to match the Exchange in which the RMC is being transmitted. The SEQ_ID

Copyright International Organization for Standardization
Provided by IHS under license with ISO
No reproduction or networking permitted without license from IHS Not for Resale

shall be assigned following the normal rules for SEQ_ID assignment.

**12.2.6.2 Protocol:**

a) Remove Connection Request
b) No Reply frame

**12.2.6.3 Request Sequence**

**Format:** FT_1

**Addressing:** The D_ID field designates the Nx_Port being requested to terminate the Class 1 or 6 Connection. The S_ID field designates the Nx_Port requesting removal.

**Payload:** The RMC Basic Link Service command has no Payload.

**12.2.6.4 Reply Sequence**

none

**12.2.7 Dedicated connection preempted (PRMT)**

**12.2.7.1 Description**

The PRMT basic link service command shall indicate that the connection for which this Nx_Port is participating has been preempted and no longer exists. All sequences associated with this connection have ended abnormally.

**12.2.7.2 Protocol**

a) Connection Preempted Notification
b) No Reply frame

**12.2.7.3 Request Sequence**

**Format:** FT_1

**Addressing:** The D_ID field shall designate the Nx_Port to which the Fabric directs this basic link service command. The S_ID field shall be equal to the S_ID field in the SOFx preemption request frame that triggered this preemption notification.

**Priority:** Bit 17 of the F_CTL field of the PRMT frame shall be set to one and the Priority field shall be set to the value of the Priority field of the SOFx preemption request frame that triggered this preemption.

**Payload:** None

**12.2.7.4 Reply Sequence**

None

## 12.3 Extended Link Services

**12.3.1 Introduction**

An Extended Link Service (ELS) request solicits a destination FC_Port to perform a function or service. An ELS reply shall be transmitted in response to an ELS request, unless otherwise specified. Each request or reply is composed of a single Sequence with the LS_Command code being specified in the first word of the Payload of the

--`,,```,,,,````-`-`,,`,,`,`,,`---

Copyright International Organization for Standardization
Provided by IHS under license with ISO
No reproduction or networking permitted without license from IHS Not for Resale

first frame of the Sequence.

Each Sequence may be composed of one or more frames. Normal rules for Exchange and Sequence management apply to ELS frames, Sequences, and Exchanges. An Accept (LS_ACC) to an ELS shall terminate the Exchange by setting the Last Sequence bit (Bit 20) to one on the last frame of the reply. An ELS request and the corresponding reply shall be performed within a single Exchange.

The TYPE field for ELS frames shall be set to hex ’01’.

The R_CTL shall be set as specified in table 61.

**Table 61 - Extended Link Routing Bits and Information Categories**

| R_CTL | | Description |
|---|---|---|
| **ROUTING** | **INFORMATION** | |
| '0010'b | ’0001’b | Solicited Data[a] |
| | '0010'b | Request |
| | '0011'b | Reply |
| | Others | Reserved |
| [a] This value is only used by the Clock Synchronization Update (CSU) ELS. | | |

The first byte of the Payload (LS_Command code) of the request or reply Sequence shall be as shown in table 62. The remainder of the Payload is ELS unique. Subsequent frames, if any, for a request or reply Sequence shall only contain additional Payload in the Payload field (i.e., the LS_Command code is not repeated in each frame).

### 12.3.2 Extended Link Service requests

#### 12.3.2.1 Introduction

A Sequence Initiator shall transmit an ELS Sequence in order to solicit the destination Nx_Port to perform a link-level function or service. Unless otherwise noted, Extended Link Service requests shall not be issued prior to completion of N_Port Login. Table 62 applies to ELSs sent to or received by all valid addresses, including well known addresses. FLOGI to a fabric is required before all ELSs if a fabric is present.

Copyright International Organization for Standardization
Provided by IHS under license with ISO
No reproduction or networking permitted without license from IHS Not for Resale

**Table 62 - ELS_Command codes**

| Value (Bits 31 to 24) | Description | Abbr. | Reference | PLOGI Required |
|---|---|---|---|---|
| hex ’01’ | Link Service Reject | LS_RJT | 12.3.3.4 | N/A |
| hex ’02’ | Link Service Accept | LS_ACC | 12.3.3.2 | N/A |
| hex ’03’ | N_Port Login | PLOGI | 12.3.2.7 | No |
| hex ’04’ | F_Port Login | FLOGI | 12.3.2.7 | No |
| hex ’05’ | Logout | LOGO | 12.3.2.8 | No |
| hex ’06’ | Abort Exchange | ABTX | 12.3.2.2 | Yes |
| hex ’07’ | Read Connection Status | RCS | 12.3.2.9 | Yes |
| hex ’08’ | Read Exchange Status Block | RES | 12.3.2.10 | Yes |
| hex ’09’ | Read Sequence Status Block | RSS | 12.3.2.12 | Yes |
| hex ’0A’ | Request Sequence Initiative | RSI | 12.3.2.15 | Yes |
| hex ’0B’ | Establish Streaming | ESTS | 12.3.2.6 | Yes |
| hex ’0C’ | Estimate Credit | ESTC | 12.3.2.5 | Yes |
| hex ’0D’ | Advise Credit | ADVC | 12.3.2.3 | Yes |
| hex ’0E’ | Read Timeout Value | RTV | 12.3.2.13 | Yes |
| hex ’0F’ | Read Link Error Status Block | RLS | 12.3.2.11 | Yes |
| hex ’10’ | Echo | ECHO | 12.3.2.4 | Yes |
| hex ’11’ | Test | TEST | 12.3.2.16 | Yes |
| hex ’12’ | Reinstate Recovery Qualifier | RRQ | 12.3.2.14 | Yes |
| hex ’13’ | Read Exchange Concise | REC | 12.3.2.54 | Yes |
| hex ’14’ | Reserved for legacy implementations[a] | | | |
| hex ’20’ | Process Login | PRLI | 12.3.2.24 | Yes |
| hex ’21’ | Process Logout | PRLO | 12.3.2.25 | Yes |
| hex ’22’ | State Change Notification | SCN | 12.3.2.26 | N/A |
| hex ’23’ | Test Process Login State | TPLS | 12.3.2.27 | Yes |
| hex ’24’ | Third Party Process Logout | TPRLO | 12.3.2.43 | Yes |

[a] Some implementations of early revisions of FCP-3 (see [9]) may have used the value hex '14' for SRR (Sequence Retransmission Request). This code is permanently reserved in this standard to avoid conflicts with such implementations. See FCP-2 for the standard implementation of SRR as an FC-4 Link Service

--`,,```,,,,````-`-`,,`,,`,`,,`---

Copyright International Organization for Standardization
Provided by IHS under license with ISO
No reproduction or networking permitted without license from IHS Not for Resale

**Table 62 - ELS_Command codes (Continued)**

| Value (Bits 31 to 24) | Description | Abbr. | Reference | PLOGI Required |
|---|---|---|---|---|
| hex ’25’ | Login Control List Management | LCLM | 12.3.2.46 | No |
| hex ’30’ | Get Alias_ID | GAID | 12.3.2.33 | No |
| hex ’31’ | Fabric Activate Alias_ID | FACT | 12.3.2.34 | No |
| hex ’32’ | Fabric Deactivate Alias_ID | FDACT | 12.3.2.35 | No |
| hex ’33’ | N_Port Activate Alias_ID | NACT | 12.3.2.36 | No |
| hex ’34’ | N_Port Deactivate Alias_ID | NDACT | 12.3.2.37 | No |
| hex ’40’ | Quality of Service Request | QoSR | 12.3.2.38 | Yes |
| hex ’41’ | Read Virtual Circuit Status | RVCS | 12.3.2.39 | Yes |
| hex ’50’ | Discover N_Port Service Parameters | PDISC | 12.3.2.40 | Yes |
| hex ’51’ | Discover F_Port Service Parameters | FDISC | 12.3.2.40 | Yes |
| hex ’52’ | Discover Address | ADISC | 12.3.2.42 | Yes |
| hex ’53’ | Report node Capability | RNC | 12.3.2.17 | N/A |
| hex ’54’ | Fibre Channel Address Resolution Protocol Request | FARP_REQ | 12.3.2.28 | No |
| hex ’55’ | Fibre Channel Address Resolution Protocol Reply | FARP_REPLY | 12.3.2.29 | Yes |
| hex ’56’ | Read Port Status Block | RPS | 12.3.2.47 | Yes |
| hex ’57’ | Read Port List | RPL | 12.3.2.48 | Yes |
| hex ’58’ | Report Port Buffer Condition | RPBC | 12.3.2.49 | Yes |
| hex ’60’ | Fabric Address Notification | FAN | 12.3.2.18 | No |
| hex ’61’ | Registered State Change Notification | RSCN | 12.3.2.22 | No |
| hex ’62’ | State Change Registration | SCR | 12.3.2.23 | No |
| hex ’63’ | Report node FC-4 Types | RNFT | 12.3.2.50 | Yes |
| hex ’68’ | Clock Synchronization Request | CSR | 12.3.2.44 | No |
| hex ’69’ | Clock Synchronization Update | CSU | 12.3.2.45 | No |
| hex ’70’ | Loop Initialize | LINIT | 12.3.2.19 | No |
| hex ’71’ | Loop Port Control (obsolete) | LPC | 12.3.2.20 | No |

[a] Some implementations of early revisions of FCP-3 (see [9]) may have used the value hex '14' for SRR (Sequence Retransmission Request). This code is permanently reserved in this standard to avoid conflicts with such implementations. See FCP-2 for the standard implementation of SRR as an FC-4 Link Service

Copyright International Organization for Standardization
Provided by IHS under license with ISO
No reproduction or networking permitted without license from IHS Not for Resale

**Table 62 - ELS_Command codes (Continued)**

| Value (Bits 31 to 24) | Description | Abbr. | Reference | PLOGI Required |
|---|---|---|---|---|
| hex ’72’ | Loop Status | LSTS | 12.3.2.21 | No |
| hex ’77’ | Vendor Specific | | | N/A |
| hex ’78’ | Request node Identification Data | RNID | 12.3.2.30 | Yes |
| hex ’79’ | Registered Link Incident Report | RLIR | 12.3.2.31 | Yes |
| hex ’7A’ | Link Incident Record Registration | LIRR | 12.3.2.32 | Yes |
| hex ’7B’ | Scan Remote Loop | SRL | 12.3.2.51 | Yes |
| hex ’7C’ | Set Bit-error Reporting Parameters | SBRP | 12.3.2.52 | Yes |
| hex ’7D’ | Report Port Speed Capabilities | RPSC | 12.3.2.53 | Yes |
| hex ’7E’ | Reserved for security | | | |
| Others | Reserved | | | |

[a] Some implementations of early revisions of FCP-3 (see [9]) may have used the value hex '14' for SRR (Sequence Retransmission Request). This code is permanently reserved in this standard to avoid conflicts with such implementations. See FCP-2 for the standard implementation of SRR as an FC-4 Link Service

If an ELS request Sequence that has a Reply Sequence is transmitted without the transfer of Sequence Initiative, the Recipient shall abort the Exchange and not perform the request. An ELS Protocol is composed of an ELS request Sequence and, for some requests, an ELS Reply Sequence. The last Data frame of an ELS request Sequence with a Reply Sequence shall transfer the Sequence Initiative to the Recipient in order to allow the reply to be transmitted (see clause 5).

The following ELS requests and their replies shall be supported by an Nx_Port (all others are optional):

a) FLOGI
b) PLOGI
c) LOGO

**Table 63 - Responses to Received ELSs**

| Login Required? (see table 62) | Logged in with Source N_Port? | |
|---|---|---|
| | Yes | No |
| Yes | Respond as appropriate for the ELS and the current state of the Nx_Port | If a reply sequence is defined for the ELS, reply with a LOGO ELS Sequence or an LS_RJT ELS Sequence with a reason code of “unable to perform command request” and a reason code explanation of “N_Port Login required”.<br><br>If a reply sequence is not defined for the ELS, it shall be discarded |
| No | Respond as appropriate for the ELS and the current state of the Nx_Port. | Respond as appropriate for the ELS and the current state of the Nx_Port. |

--`,,```,,,,````-`-`,,`,,`,`,,`---

Copyright International Organization for Standardization
Provided by IHS under license with ISO
No reproduction or networking permitted without license from IHS Not for Resale

An Nx_Port is not required to generate and send the PLOGI ELS request. However, if an Nx_Port receives a PLOGI ELS request, the Nx_Port shall respond with a LS_ACC Link Service Reply, or if the PLOGI frame has invalid information, the Nx_Port shall respond with LS_RJT. LS_RJT shall not be issued for the reason "PLOGI command not supported".

NOTE If an Nx_Port that does not generate PLOGI, is in a point-to-point topology, and has an N_Port_Name greater than the other Nx_Port's, the other Nx_Port may timeout, waiting to receive PLOGI.

All ELS requests, excluding ESTS, ESTC, and ADVC, and the corresponding replies shall be performed within a single Exchange (see 18.4.11 for the procedure using ESTS, ESTC, and ADVC). The Advise Credit request may also be performed in a separate Exchange.

The Originator of the ELS request shall assign an OX_ID when the request Sequence and Exchange are originated. If the only Exchange that the Responder has open with the Originator Nx_Port is the one for the ELS being performed, a value of hex 'FF FF' may be used. The Responder shall assign an RX_ID when the request Sequence is received. A value of hex 'FF FF' may be used if only one Exchange is open with the Originator.

Normal Sequence and Exchange management rules shall apply. See clause 9 for more information regarding use of F_CTL bits for Exchange and Sequence control as well as OX_ID, RX_ID, SEQ_ID, and SEQ_CNT.

ELS request and reply frames shall use FT_1. More than one frame may be used to form a request or reply Sequence.

The Originator of an ELS Exchange shall detect an Exchange error following Sequence Initiative transfer if the Reply Sequence is not received within a timeout interval of 2 x R_A_TOV.

There are two ELS request Sequences in which a collision is possible with the other Nx_Port involved in the same target Exchange. Those two requests are Abort Exchange (ABTX) and Request Sequence Initiative (RSI) (e.g., Nx_Port (A) may transmit an ABTX request to Nx_Port (B) at the same time that Nx_Port (B) transmits an ABTX request to Nx_Port (A) for the same target Exchange).

If such an instance occurs, the Originator Nx_Port of the target Exchange shall reject the ABTX or RSI request sequence with an LS_RJT with a reason code of “command already in progress”. The Responder Nx_Port of the target Exchange shall honor and process the ABTX or RSI request Sequence normally.

#### 12.3.2.2 Abort Exchange (ABTX)

##### 12.3.2.2.1 Description

The ABTX ELS shall be used to request abnormal termination of an open Exchange, in progress. A request to abort an Exchange shall only be accepted if the Originator Nx_Port or the Responder Nx_Port of the target Exchange makes the request.

A separate Exchange shall be used to abort the existing Exchange. The Payload shall contain the OX_ID and RX_ID for the Exchange being aborted, and shall contain the S_ID of the Exchange Originator of the Exchange being aborted.

Transmission of an ABTX frame is allowed while the identified Exchange is open (see 17.3.14). Both the Originator and Responder shall ensure that the OX_ID and RX_ID pair being terminated is currently associated with the OX_ID and RX_ID pair specified in the ABTX request.

If an RX_ID other than hex 'FF FF' has not been received by the Sequence Initiator or the First Sequence of the Exchange has not completed successfully, the Abort Sequence Protocol shall be performed prior to attempting to Abort the Exchange using ABTX (see 21.7.2.2). This ensures that the Exchange Status Block exists and that both the OX_ID and RX_ID are assigned and known to both the Originator and Responder.

In Class 1, both the OX_ID and RX_ID are available by the respective Nx_Ports for reuse after the Exchange has

Copyright International Organization for Standardization
Provided by IHS under license with ISO
No reproduction or networking permitted without license from IHS Not for Resale

been successfully aborted (i.e., LS_ACC transmitted and received). If all frames are not accounted for in Class 2, 3 or 4, a Recovery_Qualifier shall be established with a low SEQ_CNT of ’0000’ b and a high SEQ_CNT of hex 'FF FF'.

The Nx_Port that issues the ABTX request shall set the Recovery_Qualifier status in the Payload of the ABTX request to indicate whether it believes a Recovery_Qualifier is required or not required. If the ABTX indicates that a Recovery_Qualifier is not required, the Recipient of the ABTX may agree by transmitting an LS_ACC reply Sequence or it may disagree by transmitting an LS_RJT with the reason code of “Recovery_Qualifier required”.

If the ABTX requires a Recovery_Qualifier in its Payload and it is Accepted by the destination Nx_Port, then the Nx_Port that requested the ABTX shall transmit a Reinstate Recovery Qualifier (RRQ) ELS request following an R_A_TOV timeout in order to free those Exchange resources.

Each Nx_Port abnormally terminates any open Sequences associated with the Exchange. The LS_ACC reply confirms that all Sequences and the Exchange have been abnormally terminated. It also confirms the presence or absence of a Recovery_Qualifier. If ABTX is used, then the use of ABTS to precede or follow ABTX is optional.

N_Port Login shall be required to send this ELS.

#### 12.3.2.2.2 Protocol

a) Abort Exchange Request Sequence
b) LS_ACC or LS_RJT Reply Sequence

#### 12.3.2.2.3 Request Sequence

**Format:** FT_1

**Addressing:** The D_ID field designates the other Nx_Port of the Exchange being aborted. The S_ID field designates the Nx_Port that is requesting that the Exchange be aborted.

**Exchange:** A separate Exchange shall be used for the ABTX other than the Exchange being aborted in order to properly track status.

**SEQ_ID and SEQ_CNT:** The SEQ_ID and the SEQ_CNT shall be appropriate for an open Sequence.

**Payload:** The format of the Payload is shown in table 64.

**Table 64 - ABTX Payload**

| Bits / Word | 31 .. 24 | 23 .. 16 | 15 .. 08 | 07 .. 00 |
|---|---|---|---|---|
| **0** | ABTX (hex ’06’) | hex '00' | hex '00' | hex '00' |
| **1** | Recovery_Qualifier status | Originator S_ID | | |
| **2** | OX_ID | | RX_ID | |
| **3** | MSB | Association_Header (optional) | | |
| **..** | | | | |
| **10** | | | | LSB |

--`,,```,,,,````-`-`,,`,,`,`,,`---
Copyright International Organization for Standardization
Provided by IHS under license with ISO
No reproduction or networking permitted without license from IHS Not for Resale

**Recovery Qualifier:** The Recovery Qualifier values are given in table 65.

**Table 65 - Recovery Qualifier Values**

| Value | Meaning |
|---|---|
| hex '00’ | no Recovery Qualifier |
| hex ’80’ | Recovery Qualifier Required |

#### 12.3.2.2.4 Reply Sequence

**LS_RJT:** LS_RJT signifies rejection of the ABTX command.

**LS_ACC:** LS_ACC signifies that the ABTX recipient Nx_Port has terminated the Exchange. The format of the LS_ACC Payload is shown in table 66.

**Table 66 - ABTX LS_ACC Payload**

| Bits / Word | 31 .. 24 | 23 .. 16 | 15 .. 08 | 07 .. 00 |
|---|---|---|---|---|
| **0** | hex ’02’ | hex '00' | hex '00' | hex '00' |

### 12.3.2.3 Advise Credit (ADVC)

#### 12.3.2.3.1 Description

The ADVC ELS shall be used to advise the destination Nx_Port of the estimated end-to-end Credit that the source Nx_Port requests to be allocated. The ADVC ELS request shall be a separate Sequence. It may also be requested in a separate Exchange. See 18.4.11.2.4 for the usage of this frame. The ADVC request may also be used independently from the Estimate Credit procedure (see 18.4.11). If the recipient Nx_Port is not logged in with the requesting Nx_Port it shall reply with an LS_RJT ELS Sequence with a reason code of “Unable to perform command request” and a reason code explanation of “N_Port Login Required”.

#### 12.3.2.3.2 Protocol

a) Advise Credit Request Sequence
b) LS_ACC or LS_RJT Reply Sequence

#### 12.3.2.3.3 Request Sequence

**Format:** FT_1

**Addressing:** The S_ID field designates the source Nx_Port requesting Credit revision. The D_ID field designates the destination Nx_Port.

**Payload:** The format of the Payload is shown in table 67. The Payload shall contain the requested End-to-end Credit in the End-to-end Credit field of the appropriate Class Service Parameters (see 15.6.5.9) as indicated by the Class Validity bit. For each class in which a revised end-to-end Credit is requested, the Class Validity bit shall be

--`,,```,,,,````-`-`,,`,,`,`,,`---

Copyright International Organization for Standardization
Provided by IHS under license with ISO
No reproduction or networking permitted without license from IHS Not for Resale

set to one. The receiver shall ignore the other Service Parameter fields.

**Table 67 - ADVC Payload**

| Bits / Word | 31 .. 24 | 23 .. 16 | 15 .. 08 | 07 .. 00 |
|---|---|---|---|---|
| **0** | ADVC (hex '0D') | hex '00' | hex '00' | hex '00' |
| **1** | MSB | Common Service Parameters (16 bytes) | | |
| **..** | | | | |
| **4** | | | | LSB |
| **5** | MSB | N_Port_Name (8 bytes) | | |
| **6** | | | | LSB |
| **7** | MSB | Node_Name (8 bytes) | | |
| **8** | | | | LSB |
| **9** | MSB | Class 1 Service Parameters (16 bytes) | | |
| **..** | | | | |
| **12** | | | | LSB |
| **13** | MSB | Class 2 Service Parameters (16 bytes) | | |
| **..** | | | | |
| **16** | | | | LSB |
| **17** | MSB | Class 3 Service Parameters (16 bytes) | | |
| **..** | | | | |
| **20** | | | | LSB |
| **21** | MSB | Reserved (16 bytes) | | |
| **..** | | | | |
| **24** | | | | LSB |
| **25** | MSB | Vendor Version Level (16 bytes) | | |
| **..** | | | | |
| **28** | | | | LSB |

#### 12.3.2.3.4 Reply Sequence

**LS_RJT:** LS_RJT signifies rejection of the ADVC command.

**LS_ACC:** LS_ACC signifies successful completion of the ADVC function and permanently replaces the end-to-end Credit in effect for the current N_Port Login.

The format of the LS_ACC Payload is shown in table 68. The Payload shall contain the revised end-to-end Credit allocated in the Credit field for the appropriate Class Service Parameters as indicated by the Class Validity bit. The revised end-to-end Credit shall replace the end-to-end Credit for the current Login for the Nx_Port transmitting the LS_ACC Sequence (see 15.6.5.9). For each class in which a revised end-to-end Credit is updated, the Class Validity bit shall be set to one. The receiver shall ignore the other Service Parameter fields. This revised end to-end Credit value is determined by the destination Nx_Port based on its buffering scheme, buffer management, buffer

Copyright International Organization for Standardization
Provided by IHS under license with ISO
No reproduction or networking permitted without license from IHS Not for Resale

availability, and Nx_Port processing time. See 18.4.11.2.4 for the determination of this value.

**Table 68 - ADVC LS_ACC Payload**

| Bits / Word | 31 .. 24 | 23 .. 16 | 15 .. 08 | 07 .. 00 |
|---|---|---|---|---|
| **0** | hex ’02’ | hex '00' | hex '00' | hex '00' |
| **1** | MSB | Common Service Parameters (16 bytes) | | |
| **..** | | | | |
| **4** | | | | LSB |
| **5** | MSB | N_Port_Name (8 bytes) | | |
| **6** | | | | LSB |
| **7** | MSB | Node_Name (8 bytes) | | |
| **8** | | | | LSB |
| **9** | MSB | Class 1 Service Parameters (16 bytes) | | |
| **..** | | | | |
| **12** | | | | LSB |
| **13** | MSB | Class 2 Service Parameters (16 bytes) | | |
| **..** | | | | |
| **16** | | | | LSB |
| **17** | MSB | Class 3 Service Parameters (16 bytes) | | |
| **..** | | | | |
| **20** | | | | LSB |
| **21** | MSB | Reserved (16 bytes) | | |
| **..** | | | | |
| **24** | | | | LSB |
| **25** | MSB | Vendor Version Level (16 bytes) | | |
| **..** | | | | |
| **28** | | | | LSB |

### 12.3.2.4 Echo (ECHO)

#### 12.3.2.4.1 Description

The Echo ELS shall consist of a single frame requesting the Recipient to transmit the Payload contents, following the LS_Command, back to the Initiator of the Echo command in the same order as received using the LS_ACC Reply Sequence. The Echo frame shall indicate End_Sequence and Sequence Initiative transfer as well as other appropriate F_CTL bits. The Echo ELS Request provides a means to transmit a Data frame and have the Payload content returned for a simple loop-back diagnostic function. The Echo command shall be transmitted as a one frame Sequence and the LS_ACC Reply Sequence is also a one frame Sequence. The Echo Protocol shall be transmitted as an Exchange that is separate from any other Exchange.

#### 12.3.2.4.2 Protocol

a) Echo Request Sequence
b) LS_ACC or LS_RJT Reply Sequence

Copyright International Organization for Standardization
Provided by IHS under license with ISO
No reproduction or networking permitted without license from IHS Not for Resale

#### 12.3.2.4.3 Request Sequence

**Format:** FT_1

**Addressing:** The D_ID field designates the destination of the request while the S_ID field designates the source of the request.

**Payload:** The format of the Payload is shown in table 69. The Payload size is limited by the smallest Data Field size supported by the destination Nx_Port, the Fabric, and the source destination Nx_Port for the class being used since the Echo Data Field LS_ACC frame shall be equal in size to the Echo Data Field size.

**Table 69 - ECHO Payload**

| Bits / Word | 31 .. 24 | 23 .. 16 | 15 .. 08 | 07 .. 00 |
|---|---|---|---|---|
| 0 | ECHO (hex ’10’) | hex '00' | hex '00' | hex '00' |
| 1 | MSB | ECHO data (up to max. frame length, any byte boundary) | | |
| .. | | | | |
| n | | | | LSB |

#### 12.3.2.4.4 Reply Sequence

**LS_RJT:** LS_RJT signifies rejection of the ECHO command.

**LS_ACC:** LS_ACC signifies successful completion of the ECHO function. The format of the LS_ACC Payload is shown in table 70. The Payload shall contain the ECHO data contained in the Payload of the ECHO Request frame.

**Table 70 - ECHO LS_ACC Payload**

| Bits / Word | 31 .. 24 | 23 .. 16 | 15 .. 08 | 07 .. 00 |
|---|---|---|---|---|
| 0 | hex ’02’ | hex '00' | hex '00' | hex '00' |
| 1 | MSB | ECHO data (up to max. frame length - 4, any byte boundary) Excludes word 0 of ECHO Payload. | | |
| .. | | | | |
| n | | | | LSB |

### 12.3.2.5 Estimate Credit (ESTC)

#### 12.3.2.5.1 Description

The ESTC ELS shall be used to estimate the minimum Credit required to achieve the maximum bandwidth for a given distance between an Nx_Port pair. The ESTC ELS Request shall have the frame size as determined by Login with the destination Nx_Port.

The class of the SOF delimiter of the ESTC Request identifies the class for which Credit is being estimated. The destination Nx_Port shall acknowledge Data frames as specified by its Login parameters. See 18.4.11.2.3 for the usage of this frame.

#### 12.3.2.5.2 Protocol

a) Estimate Credit Request Sequence
b) No Reply Sequence

--`,,```,,,,````-`-`,,`,,`,`,,`---

Copyright International Organization for Standardization
Provided by IHS under license with ISO
No reproduction or networking permitted without license from IHS Not for Resale

#### 12.3.2.5.3 Request Sequence

**Format:** FT_1

**Addressing:** The S_ID field designates the source Nx_Port requesting the Credit estimate. The D_ID field designates the destination Nx_Port specified in the Establish Streaming frame.

**Payload:** The format of the Payload is shown in table 71. The first word of the Payload of the first frame of the Sequence shall contain the LS_Command code. The remainder of the Payload shall be the size as determined by Login. The content of the Payload after the LS_Command and for subsequent frames shall be valid data bytes.

**Table 71 - ESTC Payload**

| Bits / Word | 31 .. 24 | 23 .. 16 | 15 .. 08 | 07 .. 00 |
|---|---|---|---|---|
| **0** | ESTC (hex ’0C’) | hex '00' | hex '00' | hex '00' |
| **1** | MSB | Any data (up to max. frame length - 4, any byte boundary) | | |
| **..** | | | | |
| **n** | | | | LSB |

#### 12.3.2.5.4 Reply Sequence

None.

### 12.3.2.6 Establish Streaming (ESTS)

#### 12.3.2.6.1 Description

The ESTS ELS shall request a temporary allocation of Credit known as Streaming Credit large enough to perform continuous streaming of Data frames. The SOF delimiter of the ESTS Request identifies the class for which Credit is being estimated. See 18.4.11.2.2 for the usage of this frame.

If the recipient Nx_Port is not logged in with the requesting Nx_Port it shall reply with an LS_RJT ELS Sequence with a reason code of “Unable to perform command request” and a reason code explanation of “N_Port Login required”.

#### 12.3.2.6.2 Protocol

a) Establish Streaming Request Sequence
b) LS_ACC or LS_RJT Reply Sequence

#### 12.3.2.6.3 Request Sequence

**Format:** FT_1

**Addressing:** The S_ID field designates the source Nx_Port requesting Streaming. The D_ID field designates the destination Nx_Port addressed.

Copyright International Organization for Standardization
Provided by IHS under license with ISO
No reproduction or networking permitted without license from IHS Not for Resale

**Payload:** The format of the Payload is shown in table 72.

**Table 72 - ESTS Payload**

| Bits / Word | 31 .. 24 | 23 .. 16 | 15 .. 08 | 07 .. 00 |
|---|---|---|---|---|
| **0** | ESTS (hex ’0B’) | hex '00' | hex '00' | hex '00' |

**12.3.2.6.4 Reply Sequence**

**LS_RJT:** LS_RJT signifies rejection of the ESTS command

**LS_ACC:** LS_ACC signifies successful completion of the ESTS function. The format of the LS_ACC Payload is shown in table 73. The Payload shall contain Streaming Credit (L) allocated in the Credit field of the appropriate Class Service Parameters. The Class Validity bit, when set to one, identifies the class that contains the Streaming Credit. The receiver shall ignore the other Service Parameter fields.

**Table 73 - ESTS LS_ACC Payload**

| Bits / Word | 31 .. 24 | 23 .. 16 | 15 .. 08 | 07 .. 00 |
|---|---|---|---|---|
| **0** | hex ’02’ | hex '00' | hex '00' | hex '00' |
| **1** | MSB | Common Service Parameters (16 bytes) | | |
| | | | | |
| **4** | | | | LSB |
| **5** | MSB | N_Port_Name (8 bytes) | | |
| **6** | | | | LSB |
| **7** | MSB | node Name (8 bytes) | | |
| **8** | | | | LSB |
| **9** | MSB | Class 1 Service Parameters (16 bytes) | | |
| .. | | | | |
| **12** | | | | LSB |
| **13** | MSB | Class 2 Service Parameters (16 bytes) | | |
| .. | | | | |
| **16** | | | | LSB |
| **17** | MSB | Class 3 Service Parameters (16 bytes) | | |
| .. | | | | |
| **20** | | | | LSB |
| **21** | MSB | Reserved (16 bytes) | | |
| .. | | | | |
| **24** | | | | LSB |
| **25** | MSB | Vendor Version Level (16 bytes) | | |
| .. | | | | |
| **38** | | | | LSB |

Copyright International Organization for Standardization
Provided by IHS under license with ISO
No reproduction or networking permitted without license from IHS Not for Resale

#### 12.3.2.7 Login (FLOGI/PLOGI)

##### 12.3.2.7.1 Description

The FLOGI/PLOGI ELS shall transfer Service Parameters from the initiating Nx_Port to the FC_Port associated with the D_ID. The FLOGI frame provides the means by which an Nx_Port may request Login with the Fabric (see 15.3). The PLOGI frame provides the means by which an Nx_Port may request Login with another Nx_Port prior to other Data frame transfers (see 15.4).

In order to Login with the Fabric and determine the Fabric operating characteristics, an Nx_Port shall specify the D_ID as the well-known F_Port_ID (i.e., hex 'FF FF FE').

In order to direct the Login ELS frame to a Fibre Channel Service, an Nx_Port shall specify the N_Port_ID for the Nx_Port providing the service or the appropriate well-known Address Identifier (see table 21).

When an Nx_Port receives a Login from an Nx_Port, all open Sequences with the Nx_Port performing Login shall be abnormally terminated.

##### 12.3.2.7.2 Protocol

a) FLOGI or PLOGI Request Sequence
b) LS_ACC or LS_RJT Reply Sequence

##### 12.3.2.7.3 Request Sequence

**Format:** FT_1

**Addressing:** The S_ID field designates the source Nx_Port requesting Login. If unidentified, as in Fabric Login, binary zeros are used. The D_ID field designates the destination Nx_Port or Fx_Port of the Login.

**Payload:** The format of the Payload is shown in table 216. The Service Parameters are defined in 15.6.

##### 12.3.2.7.4 Reply Sequence

**LS_RJT:** LS_RJT signifies rejection of the FLOGI or PLOGI Request Sequence

**LS_ACC:** LS_ACC signifies successful completion of the FLOGI or PLOGI Request Sequence. The format of the LS_ACC Payload is shown in table 216. The Service Parameters are defined in 15.6.

#### 12.3.2.8 Logout (LOGO)

##### 12.3.2.8.1 Description

The LOGO ELS, when sent to an N_Port, shall request invalidation of the Service Parameters and N_Port_Name that have been saved by an Nx_Port, freeing those resources. This provides a means by which an Nx_Port may request Logout or remove service between two Nx_Ports. (see 15.5)

The LOGO ELS, when sent to the well-known (hex 'FF FF FE'), shall request the removal and logout of the previously-assigned N_Port_ID specified in the S_ID field.

The N_Port_ID and N_Port_Name of the Nx_Port requesting Logout are identified in the Payload. For the case of N_Port logout with another N_Port, this allows an Nx_Port to Logout its old Identifier using a new Identifier after its native N_Port_ID has changed. Both the source Nx_Port and the destination Nx_Port of the Logout Request Sequence shall abnormally terminate all open Exchanges (see 17.7.2) that used the N_Port_ID indicated in the Payload of the Logout Request Sequence.

--`,,```,,,,````-`-`,,`,,`,`,,`---

Copyright International Organization for Standardization
Provided by IHS under license with ISO
No reproduction or networking permitted without license from IHS Not for Resale

#### 12.3.2.8.2 Protocol

a) Logout Request Sequence
b) LS_ACC or LS_RJT Reply Sequence

#### 12.3.2.8.3 Request Sequence

**Format:** FT_1

**Addressing:** The S_ID field designates the source Nx_Port requesting Logout. The D_ID field designates the destination Nx_Port of the Logout Request, or the well-known F_Port ID, hex 'FF FF FE'.

**Payload:** The format of the Payload is shown in table 74.

**Table 74 - LOGO Payload**

| Bits / Word | 31 .. 24 | 23 .. 16 | 15 .. 08 | 07 .. 00 |
|---|---|---|---|---|
| 0 | LOGO (hex '05') | hex '00' | hex '00' | hex '00' |
| 1 | Reserved | N_Port_ID | | |
| 2 | MSB | N_Port_Name (8 bytes) | | |
| 3 | | | | LSB |

#### 12.3.2.8.4 Reply Sequence

**LS_RJT:** LS_RJT signifies rejection of the LOGO command.

**LS_ACC:** When the LOGO ELS was sent to an N_Port, LS_ACC signifies that Service has been removed; when the LOGO ELS was sent to the well-known F_Port ID (hex 'FF FF FE'), LS_ACC signifies that N_Port_ID specified in the D_ID field of the LS_ACC has been removed and logged out. The format of the LS_ACC Payload is shown in table 75.

**Table 75 - LOGO LS_ACC Payload**

| Bits / Word | 31 .. 24 | 23 .. 16 | 15 .. 08 | 07 .. 00 |
|---|---|---|---|---|
| 0 | hex '02' | hex '00' | hex '00' | hex '00' |

### 12.3.2.9 Read Connection Status (RCS)

#### 12.3.2.9.1 Description

The RCS ELS shall request the Fabric Controller to return the current dedicated connection status for the Nx_Port specified in the Payload of the RCS frame. The RCS Request provides the means by which an Nx_Port may interrogate the Fabric for the Connection status of other Nx_Ports within the Fabric.

In order to direct the RCS ELS Request frame to the Fabric, an Nx_Port specifies the D_ID as the Fabric Controller (i.e., hex 'FF FF FD').

#### 12.3.2.9.2 Protocol

a) Read Connection Status Request Sequence
b) LS_ACC or LS_RJT Reply Sequence

Copyright International Organization for Standardization
Provided by IHS under license with ISO
No reproduction or networking permitted without license from IHS Not for Resale

#### 12.3.2.9.3 Request Sequence

**Format:** FT_1

**Addressing:** The S_ID field designates the source Nx_Port requesting Connection status. The D_ID field is the Fabric Controller, (hex 'FF FF FD').

**Payload:** The format of the Payload is shown in table 76. The first word of the Payload shall contain the LS_Command code. The second word shall contain the N_Port_ID for which Connection status is being requested.

**Table 76 - RCS Payload**

| Bits / Word | 31 .. 24 | 23 .. 16 | 15 .. 08 | 07 .. 00 |
|---|---|---|---|---|
| **0** | RCS (hex ’07’) | hex '00' | hex '00' | hex '00' |
| **1** | Reserved | N_Port_ID | | |

#### 12.3.2.9.4 Reply Sequence

**LS_RJT:** LS_RJT signifies rejection of the RCS command.

**LS_ACC:** LS_ACC signifies that the Fabric has completed the request. The format of the LS_ACC Payload is shown in table 77.

**Table 77 - RCS LS_ACC Payload**

| Bits / Word | 31 .. 24 | 23 .. 16 | 15 .. 08 | 07 .. 00 |
|---|---|---|---|---|
| **0** | hex ’02’ | hex '00' | hex '00' | hex '00' |
| **1** | Connection Status | N_Port_ID | | |

The Connection Status Codes are defined in table 78.

Bits 23 through 0 specify the address identifier of the Nx_Port involved in a dedicated connection with the other

Copyright International Organization for Standardization
Provided by IHS under license with ISO
No reproduction or networking permitted without license from IHS Not for Resale

Nx_Port specified by the RCS ELS Request Sequence frame (i.e., the Connection established bit is set to one).

**Table 78 - Connection Status Codes**

| Name | Bit Number | Value | Definition |
|---|---|---|---|
| Connect-Request delivered | 31 | 0 | The specified Nx_Port is either not Connected, or is involved in an Established Connection based on the setting of the Connection established bit. |
| | | 1 | A connect-Request has been delivered to the specified Nx_Port, but the Nx_Port has not yet responded with a proper response frame and a dedicated connection does not yet exist. |
| Connect-Request stacked | 30 | 0 | No connect-Request is stacked for the specified Nx_Port on behalf of the requesting Nx_Port. |
| | | 1 | One or more connect-Requests are stacked, but have not been delivered to the specified Nx_Port on behalf of the requesting Nx_Port |
| Connection established | 29 | 0 | The specified Nx_Port in the RCS Request is not in a dedicated connection |
| | | 1 | The specified Nx_Port is involved in a dedicated connection. The address identifier in bits 23 to 0 identifies the other Nx_Port involved in the dedicated connection. |
| Intermix mode | 28 | 0 | The N_Port specified in the RCS frame is not functioning in Intermix mode. |
| | | 1 | The N_Port specified in the request is functioning in intermix mode. An N_Port is functioning in intermix mode if both the N_Port and the F_Port have both previously indicated that each supports intermix during Login. |

### 12.3.2.10 Read Exchange Status Block (RES)

#### 12.3.2.10.1 Description

The RES ELS Request Sequence requests an Nx_Port to return the Exchange Status Block as defined in 17.8.1 for the RX_ID or OX_ID originated by the S_ID specified in the Payload of this Request Sequence. The specification of OX_ID and RX_ID provides information for the destination Nx_Port to locate the status information requested. If the RX_ID is hex 'FF FF', then a Responder destination Nx_Port shall only use the OX_ID, otherwise only the RX_ID shall be used. Similarly, the Originator would use the OX_ID and ignore the RX_ID. This provides the Nx_Port transmitting the request with information regarding the current status of the Exchange specified.

If the destination Nx_Port of the RES Request determines that the SEQ_ID, Originator S_ID, OX_ID, or RX_ID are inconsistent, then it shall reply with an LS_RJT Sequence with a reason code of "Unable to perform the command request".

N_Port Login shall be required to send this ELS.

Copyright International Organization for Standardization
Provided by IHS under license with ISO
No reproduction or networking permitted without license from IHS Not for Resale

#### 12.3.2.10.2 Protocol

a) Read Exchange Status Request Sequence
b) LS_ACC or LS_RJT Reply Sequence

#### 12.3.2.10.3 Request Sequence

**Format:** FT_1

**Addressing:** The S_ID field designates the source Nx_Port requesting the Exchange Status Block. The D_ID field designates the destination Nx_Port to which the request is being made.

**Payload:** The format of the Payload is shown in 79.

**Table 79 - RES Payload**

| Bits / Word | 31 .. 24 | 23 .. 16 | 15 .. 08 | 07 .. 00 |
|---|---|---|---|---|
| **0** | hex ’08’ | hex '00' | hex '00' | hex '00' |
| **1** | Reserved | Originator S_ID | | |
| **2** | OX_ID | | RX_ID | |
| **2 + N** | MSB | Association_Header (optionally required) (32 bytes) | | |
| **..** | | | | |
| **9 + N** | | | | LSB |

#### 12.3.2.10.4 Reply Sequence

**LS_RJT:** LS_RJT signifies rejection of the RES command.

**LS_ACC:** LS_ACC signifies that the Nx_Port has transmitted the requested data. The format of the LS_ACC Payload is shown in table 80. The format of the Exchange Status Block is specified in table 246.

**Table 80 - RES LS_ACC Payload**

| Bits / Word | 31 .. 24 | 23 .. 16 | 15 .. 08 | 07 .. 00 |
|---|---|---|---|---|
| **0** | hex ’02’ | hex '00' | hex '00' | hex '00' |
| **1** | Reserved | Originator S_ID | | |
| **2** | MSB | Exchange Status Block (see 17.8.1) (N words) | | |
| **..** | | | | |
| **1 + N** | | | | LSB |
| **2 + N** | MSB | Association_Header (optionally required) (32 bytes) | | |
| **..** | | | | |
| **9 + N** | | | | LSB |

Copyright International Organization for Standardization
Provided by IHS under license with ISO
No reproduction or networking permitted without license from IHS Not for Resale

#### 12.3.2.11 Read Link Error Status Block (RLS)

##### 12.3.2.11.1 Description

The RLS ELS shall request an FC_Port to return the Link Error Status Block associated with the Port_ID specified in the Payload. This provides the Nx_Port transmitting the request with information regarding Link Errors detected within the destination FC_Port. If an Fx_Port does not support the Link Error Status Block, it shall reply with an LS_RJT with a reason code of “Unable to perform command request”.

##### 12.3.2.11.2 Protocol

a) Read Link Error Status Request Sequence
b) LS_ACC or LS_RJT Reply Sequence

##### 12.3.2.11.3 Request Sequence

**Format:** FT_1

**Addressing:** The S_ID field designates the source Nx_Port requesting the Link Error Status Block. The D_ID field designates the destination FC_Port to which the request is being made.

**Payload:** The format of the Payload is shown in table 81.

**Table 81 - RLS Payload**

| Bits / Word | 31 .. 24 | 23 .. 16 | 15 .. 08 | 07 .. 00 |
|---|---|---|---|---|
| **0** | RLS (hex ’0F’) | hex '00' | hex '00' | hex '00' |
| **1** | Reserved | N_Port_ID | | |

##### 12.3.2.11.4 Reply Sequence

**LS_RJT:** LS_RJT signifies rejection of the RLS command.

**LS_ACC:** LS_ACC signifies that the FC_Port has transmitted the requested data. The format of the LS_ACC Payload is shown in table 82. The format of the Link Error Status Block is specified in table 256**.**

**Table 82 - RLS LS_ACC Payload**

| Bits / Word | 31 .. 24 | 23 .. 16 | 15 .. 08 | 07 .. 00 |
|---|---|---|---|---|
| **0** | hex ’02’ | hex '00' | hex '00' | hex '00' |
| **1** | MSB | Link Error Status Block (see table 256) (24 bytes) | | |
| **..** | | | | |
| **6** | | | | LSB |

#### 12.3.2.12 Read Sequence Status Block (RSS)

##### 12.3.2.12.1 Description

The RSS ELS shall request an Nx_Port to return the Sequence Status Block for the SEQ_ID specified in the Payload. The Payload also specifies the S_ID of the Exchange Originator in addition to the associated OX_ID and RX_ID. The specification of OX_ID and RX_ID provide information for the destination Nx_Port to locate the status

Copyright International Organization for Standardization
Provided by IHS under license with ISO
No reproduction or networking permitted without license from IHS Not for Resale

information requested. A Responder destination Nx_Port may use RX_ID and ignore the OX_ID. Similarly, the Originator would use the OX_ID and ignore the RX_ID. This provides the Nx_Port transmitting the request with information regarding the current status of the Sequence it identified.

If the destination Nx_Port of the RSS Request determines that the SEQ_ID, Originator S_ID, OX_ID, or RX_ID are inconsistent, it shall reply with an LS_RJT Sequence with a reason code of “Unable to perform the command request”.

N_Port Login shall be required to send this ELS.

#### 12.3.2.12.2 Protocol

a) Read Sequence Status Request Sequence
b) LS_ACC or LS_RJT Reply Sequence

#### 12.3.2.12.3 Request Sequence

**Format:** FT_1

**Addressing:** The S_ID field designates the source Nx_Port requesting the Sequence Status Block. The D_ID field designates the destination Nx_Port to which the request is being made.

**Payload:** The format of the Payload is shown in table 83.

**Table 83 - RSS Payload**

| Bits / Word | 31 .. 24 | 23 .. 16 | 15 .. 08 | 07 .. 00 |
|---|---|---|---|---|
| **0** | RSS (hex ’09’) | hex '00' | hex '00' | hex '00' |
| **1** | SEQ_ID | Originator S_ID | | |
| **2** | OX_ID | | RX_ID | |

#### 12.3.2.12.4 Reply Sequence

**LS_RJT:** LS_RJT signifies rejection of the RSS command.

**LS_ACC:** LS_ACC signifies that the Nx_Port has transmitted the requested data. The format of the LS_ACC Payload is shown in table 84. The format of the Sequence Status Block is specified in 17.8.2.

**Table 84 - RSS LS_ACC Payload**

| Bits / Word | 31 .. 24 | 23 .. 16 | 15 .. 08 | 07 .. 00 |
|---|---|---|---|---|
| **0** | hex ’02’ | hex '00' | hex '00' | hex '00' |
| **1** | MSB | Sequence Status Block (see 17.8.2) (N words) | | |
| **..** | | | | |
| **N** | | | | LSB |

Copyright International Organization for Standardization
Provided by IHS under license with ISO
No reproduction or networking permitted without license from IHS Not for Resale

#### 12.3.2.13 Read Timeout Value (RTV)

##### 12.3.2.13.1 Description

The RTV ELS shall request an FC_Port to return the R_A_TOV and the E_D_TOV in the LS_ACC. The LS_ACC also indicates that the FC_Port uses the default value or the short value for R_T_TOV. This provides the FC_Port transmitting the RTV ELS with information regarding these values from another FC_Port. Usage of R_A_TOV, E_D_TOV and R_T_TOV requirements are given in 21.2.1.

##### 12.3.2.13.2 Protocol

a) Read Timeout Value (RTV) Request Sequence
b) LS_ACC or LS_RJT Reply Sequence

##### 12.3.2.13.3 Request Sequence

**Format:** FT_1

**Addressing:** The S_ID field designates the source Nx_Port requesting the timeout interval values. The D_ID field designates the destination FC_Port to which the request is being made.

**Payload:** The format of the Payload is shown in table 85.

**Table 85 - RTV Payload**

| Bits / Word | 31 .. 24 | 23 .. 16 | 15 .. 08 | 07 .. 00 |
|---|---|---|---|---|
| **0** | RTV (hex ’0E’) | hex '00' | hex '00' | hex '00' |

##### 12.3.2.13.4 Reply Sequence

**LS_RJT:** LS_RJT signifies rejection of the RTV command.

**LS_ACC:** LS_ACC signifies that the FC_Port has transmitted the requested data. The format of the LS_ACC Payload is shown in table 86. E_D_TOV Timeout values are specified as a count of either 1 ms or 1 ns increments, depending on the setting of the E_D_TOV Resolution (see 15.6.2.4.8).

**Table 86 - RTV LS_ACC Payload**

| Bits / Word | 31 .. 24 | 23 .. 16 | 15 .. 08 | 07 .. 00 |
|---|---|---|---|---|
| **0** | hex ’02’ | hex '00' | hex '00' | hex '00' |
| **1** | Resource_Allocation_Timeout Value (R_A_TOV) (see 21.2.1.4) | | | |
| **2** | Error_Detect_Timeout Value (E_D_TOV) (see 21.2.1.4) | | | |
| **3** | Timeout Qualifier (see 15.6.2.10) | | | |

The Timeout Qualifier word is defined as follows:

a) Bits 31 to 27: Reserved
b) Bit 26: E_D_TOV Resolution
c) If the E_D_TOV Resolution bit is zero, the value specified in the E_D_TOV field shall indicate a count of 1 ms increments. If the E_D_TOV Resolution bit is one, the value specified in the E_D_TOV field shall indicate a count of 1 ns increments.
d) Bits 25 to 20: Reserved

Copyright International Organization for Standardization
Provided by IHS under license with ISO
No reproduction or networking permitted without license from IHS Not for Resale

e) Bit 19: R_T_TOV Value
f) If this bit is set to zero, the value of R_T_TOV shall be the default value of 100 ms. If it is set to one, the value of R_T_TOV shall be 100 µs.
g) Bits 18 to 0: Reserved

#### 12.3.2.14 Reinstate Recovery Qualifier (RRQ)

##### 12.3.2.14.1 Description

The RRQ ELS shall be used to notify the destination Nx_Port that the Recovery_Qualifier shall be available for reuse. The Recovery_Qualifier (S_ID, D_ID, OX_ID, RX_ID, and low SEQ_CNT minus high SEQ_CNT) shall be associated with an Exchange in which the Abort Sequence or Abort Exchange was previously performed.

In the case of Abort Exchange, the ESB and Recovery_Qualifier are immediately available for reuse. In the case of Abort Sequence Protocol, the Recovery_Qualifier is purged. A request to Reinstate the Recovery_Qualifier shall only be accepted if the Originator Nx_Port or the Responder Nx_Port of the target Exchange makes the request.

A separate Exchange shall be used to reinstate the Recovery_Qualifier. The Payload shall contain the OX_ID and RX_ID for the Exchange Recovery_Qualifier, in addition to the S_ID of the Nx_Port that originated the Exchange being aborted. Resources associated with the OX_ID in the Originator, and with the RX_ID in the Responder, shall be released following transmission and reception of the LS_ACC reply Sequence if the Exchange had been aborted with ABTX.

Both the Originator and Responder shall ensure that the OX_ID and RX_ID pair being terminated is currently associated with the OX_ID and RX_ID pair specified in the RRQ Request.

The Recovery_Qualifier range shall be timed out for an R_A_TOV timeout period (i.e., RRQ shall not be transmitted until an R_A_TOV timeout period after BA_ACC for ABTS or LS_ACC for ABTX has been received) by the Nx_Port that transmitted and successfully completed either the ABTX or the ABTS frame.

N_Port Login shall be required to send this ELS.

##### 12.3.2.14.2 Protocol

a) Reinstate Recovery Qualifier Request Sequence
b) LS_ACC or LS_RJT Reply Sequence

##### 12.3.2.14.3 Request Sequence

**Format:** FT_1

**Addressing:** The D_ID field designates the destination Nx_Port of the RRQ Request Sequence while the S_ID field designates the source Nx_Port that is requesting that the Recovery_Qualifier be reinstated.

**Exchange:** A separate Exchange is required.

**SEQ_ID and SEQ_CNT:** The SEQ_ID and the SEQ_CNT shall be appropriate for an open Sequence.

Copyright International Organization for Standardization
Provided by IHS under license with ISO
No reproduction or networking permitted without license from IHS Not for Resale

**Payload:** The format of the Payload is shown in table 87.

**Table 87 - RRQ Payload**

| Bits / Word | 31 .. 24 | 23 .. 16 | 15 .. 08 | 07 .. 00 |
|---|---|---|---|---|
| **0** | RRQ (hex ’12’) | hex '00' | hex '00' | hex '00' |
| **1** | Reserved | Originator S_ID | | |
| **2** | OX_ID | | RX_ID | |
| **3** | MSB | Association_Header (optional) (32 bytes) | | |
| **..** | | | | |
| **10** | | | | LSB |

**12.3.2.14.4 Reply Sequence**

**LS_RJT:** LS_RJT signifies rejection of the RRQ command.

**LS_ACC:** LS_ACC signifies that the destination Nx_Port reinstated the Recovery_Qualifier. The format of the LS_ACC Payload is shown in table 88.

**Table 88 - RRQ LS_ACC Payload**

| Bits / Word | 31 .. 24 | 23 .. 16 | 15 .. 08 | 07 .. 00 |
|---|---|---|---|---|
| **0** | hex ’02’ | hex '00' | hex '00' | hex '00' |

**12.3.2.15 Request Sequence Initiative (RSI)**

**12.3.2.15.1 Description**

The RSI ELS shall be used to request that Sequence Initiative be passed to the Sequence Recipient of an Exchange in progress. A request to pass Sequence Initiative shall only be accepted if the Originator Nx_Port or the Responder Nx_Port of the target Exchange makes the request. A separate Exchange shall be used to perform the Request Sequence Initiative. The Payload shall contain the OX_ID and RX_ID for the target Exchange, in addition to the S_ID of the Nx_Port that originated the Exchange. The LS_ACC Reply is sent subsequent to the transfer of Sequence Initiative on the target Exchange.

Transmission of RSI is allowed while the identified Exchange is open. Both the Originator and Responder shall ensure that the OX_ID and RX_ID pair for which Sequence Initiative is being passed are currently associated with the OX_ID and RX_ID pair specified in the RSI Request.

If there is a Sequence active for the target Exchange, the Sequence Initiator of the active Sequence of the target Exchange shall terminate them and transfer Sequence Initiative as follows:

a) If there is an active Sequence for which the last Data frame has not been transmitted, the Sequence Initiator of the target Exchange shall terminate the Sequence by transmitting a Data frame with the End_Sequence and Sequence Initiative bits set to one in F_CTL.
b) If there are no Data frames to be sent for the active Sequence, the Sequence Initiator of the target Exchange shall transmit a NOP Basic Link Service frame with the End_Sequence and Sequence Initiative bits set to one in F_CTL.

If there is no Sequence active, the Sequence Initiator of the target Exchange shall transfer Sequence Initiative by initiating a new Sequence consisting of a single NOP Basic Link Service frame (a one frame Sequence) with the

--`,,```,,,,````-`-`,,`,,`,`,,`---

Copyright International Organization for Standardization
Provided by IHS under license with ISO
No reproduction or networking permitted without license from IHS Not for Resale

End_Sequence and Sequence Initiative bits set to 1 in F_CTL.

The LS_ACC to the Exchange requesting Sequence Initiative shall be transmitted after Sequence Initiative has been passed (see 9.7.9) on the target Exchange.

#### 12.3.2.15.2 Protocol

a) Request Sequence Initiative Request Sequence
b) LS_ACC or LS_RJT Reply Sequence

#### 12.3.2.15.3 Request Sequence

**Format:** FT_1

**Addressing:** The D_ID field designates the destination Nx_Port of the Exchange for which Sequence Initiative is being requested and the S_ID field designates the source Nx_Port that is requesting Sequence Initiative.

**Exchange:** A separate Exchange is required other than the Exchange for which Sequence Initiative is being requested in order to properly track status.

**SEQ_ID and SEQ_CNT:** The SEQ_ID and the SEQ_CNT shall be appropriate for an open Sequence.

**Payload:** The format of the Payload is shown in table 89.

**Table 89 - RSI Payload**

| Bits / Word | 31 .. 24 | 23 .. 16 | 15 .. 08 | 07 .. 00 |
|---|---|---|---|---|
| 0 | RSI (hex ’0A’) | hex '00' | hex '00' | hex '00' |
| 1 | Reserved | Originator S_ID | | |
| 2 | OX_ID | | RX_ID | |
| 3 | MSB | Association_Header (optional) (32 bytes) | | |
| .. | | | | |
| 10 | | | | LSB |

#### 12.3.2.15.4 Reply Sequence

**LS_RJT:** LS_RJT signifies rejection of the RSI command.

**LS_ACC:** LS_ACC signifies that the destination Nx_Port has transferred the Sequence Initiative for the target Exchange. The format of the LS_ACC Payload is shown in table 90.

**Table 90 - RSI LS_ACC Payload**

| Bits / Word | 31 .. 24 | 23 .. 16 | 15 .. 08 | 07 .. 00 |
|---|---|---|---|---|
| 0 | hex ’02’ | hex '00' | hex '00' | hex '00' |

#### 12.3.2.16 Test (TEST)

#### 12.3.2.16.1 Description

The TEST ELS shall consist of a single Sequence being transmitted from the Sequence Initiator to the Sequence

Copyright International Organization for Standardization
Provided by IHS under license with ISO
No reproduction or networking permitted without license from IHS Not for Resale

Recipient. The Test Request may be used in diagnostic or testing procedures to provide system loading. There is no Reply Sequence. The Payload may consist of any frame size up to the maximum allowable for the class and other normal Sequence and frame limitations.

#### 12.3.2.16.2 Protocol

a) Test Request Sequence
b) No Reply Sequence

#### 12.3.2.16.3 Request Sequence

**Format:** FT_1

**Addressing:** The D_ID field designates the destination of the request while the S_ID field designates the source of the request.

**Payload:** The format of the Payload is shown in table 91.

**Table 91 - TEST Payload**

| Bits / Word | 31 .. 24 | 23 .. 16 | 15 .. 08 | 07 .. 00 |
|---|---|---|---|---|
| **0** | TEST (hex ’11’) | hex '00' | hex '00' | hex '00' |
| **1** | MSB | TEST data (up to max. Data Field size, any byte boundary) | | |
| **..** | | | | |
| **n** | | | | LSB |

The Payload size is limited by the smallest Data Field size supported by the destination Nx_Port and the Fabric for the class being used.

#### 12.3.2.16.4 Reply Sequence

none

### 12.3.2.17 Report node Capability Information (RNC)

Obsolete. For an ELS that reports FC-4 types, see 12.3.2.50.

### 12.3.2.18 Fabric Address Notification (FAN)

#### 12.3.2.18.1 Description

The FAN ELS shall be sent by an FL_Port (hex 'FF FF FE') to all known previously logged in (via FLOGI) attached NL_Ports following an initialization event. This initialization event is typically Loop Initialization on an Arbitrated Loop, though other events that may cause a port to change its ID may also be considered. The FL_Port shall report the F_Port_Name and Fabric_Name as they were reported in the prior FLOGI, and shall report the current Loop Fabric Address. The FL_Port shall send this ELS using the default login parameters (i.e., the parameters that are in effect prior to a FLOGI Request).

The attached ports may use this information to authenticate active Exchanges and operating parameters (e.g., login BB_Credit).

The FL_Port shall report identical information to all attached NL_Ports. If the information changes in any way before the FL_Port is able to send the service to all attached ports, the FL_Port shall begin a new initialization event.

Copyright International Organization for Standardization
Provided by IHS under license with ISO
No reproduction or networking permitted without license from IHS Not for Resale

The attached NL_Ports shall not initiate a Reply Sequence to this ELS.

#### 12.3.2.18.2 Protocol

a) Fabric Address Notification Request Sequence
b) No Reply Sequence

#### 12.3.2.18.3 Request Sequence

**Format:** FT_1

**Addressing:** The S_ID is the FL_Port (hex 'FF FF FE') sending the FAN. The D_ID is the NL_Port receiving the FAN.

**Payload:** The format of the FAN Request Payload is shown in table 92.

**Table 92 - FAN Payload**

| Bits / Word | 31 .. 24 | 23 .. 16 | 15 .. 08 | 07 .. 00 |
|---|---|---|---|---|
| **0** | FAN (hex '60') | hex '00' | hex '00' | hex '00' |
| **1** | Reserved | Loop Fabric Address | | |
| **2** | MSB | F_Port_Name (8 bytes) | | |
| **3** | | | | LSB |
| **4** | MSB | Fabric_Name (8 bytes) | | |
| **5** | | | | LSB |

#### 12.3.2.18.4 Reply Sequence

none

### 12.3.2.19 Loop Initialize (LINIT)

#### 12.3.2.19.1 Description

The LINIT ELS shall request the start of Loop Initialization on a designated loop. The FL_Port connected to the loop addressed by the Loop Fabric Address shall originate a LIP of the type specified in the Payload and enter the INITIALIZING Arbitrated Loop State. The LS_ACC Reply Sequence shall not be initiated before the FL_Port has transitioned from the OPEN-INIT to MONITORING State, and has completed sending any FAN ELS. See [2], FC-AL-2). If the LINIT ELS is received by a non-FL_Port, the port shall originate an LS_RJT with a reason code of "Command not supported".

#### 12.3.2.19.2 Protocol

a) Loop Initialize Request Sequence
b) LS_ACC or LS_RJT Reply Sequence

#### 12.3.2.19.3 Request Sequence

**Format:** FT_1

**Addressing:** The S_ID designates the Nx_Port requesting Loop Initialization of the loop. The D_ID field shall be the Loop Fabric Address (LFA) of the loop to be initialized.

--`,,```,,,,````-`-`,,`,,`,`,,`---

Copyright International Organization for Standardization
Provided by IHS under license with ISO
No reproduction or networking permitted without license from IHS Not for Resale

**Payload:** The format of the LINIT Request Payload is shown in table 93.

**Table 93 - LINIT Payload**

| Bits / Word | 31 .. 24 | 23 .. 16 | 15 .. 08 | 07 .. 00 |
|---|---|---|---|---|
| **0** | LINIT (hex ’70’) | hex '00' | hex '00' | hex '00' |
| **1** | Reserved | Initialization Function | LIP byte 3 | LIP byte 4 |

The Initialization Function field defines modifications of the initialization to be performed. The format of the Initialization Function is shown in table 94.

**Table 94 - Initialization Function**

| Function | Value |
|---|---|
| Normal Initialization - The fabric determines the best method by which to complete the initialization. | 0 |
| Force Login - The L_bit shall be set in the Loop Initialization Soft Assigned (LISA)<br>Sequence to force all affected L_Ports to perform FLOGI. | 1 |
| Reserved | 2 to 255 |

The LIP Byte 3 field is the 3rd character of the LIP Primitive Sequence to be originated. The LIP Byte 4 field is the 4th character of the LIP Primitive Sequence to be originated. LIP Byte 3 and LIP Byte 4 should only be set to values permitted by FC-AL-2.

**12.3.2.19.4 Reply Sequence**

**LS_RJT:** LS_RJT signifies the rejection of the LINIT command

**LS_ACC:** LS_ACC signifies acceptance of the LINIT Request and initiation of Loop Initialization. The format of the LS_ACC Payload is shown in table 95.

**Table 95 - LINIT LS_ACC Payload**

| Bits / Word | 31 .. 24 | 23 .. 16 | 15 .. 08 | 07 .. 00 |
|---|---|---|---|---|
| **0** | hex ’02’ | hex '00' | hex '00' | hex '00' |
| **1** | Reserved | | | Status |

The format of the Status field is shown in table 96.

**Table 96 - LINIT Status**

| State | Value |
|---|---|
| Reserved | 0 |
| Success - The requested function was completed. | 1 |
| Failure - The requested function could not be completed. | 2 |
| Reserved | 3 to 255 |

#### 12.3.2.20 Loop Port Control (LPC) (Obsolete)

The LPC ELS is obsolete.

#### 12.3.2.21 Loop Status (LSTS)

##### 12.3.2.21.1 Description

The LSTS ELS shall be used to request the Fabric Controller to report on the state of the specified loop.

##### 12.3.2.21.2 Protocol

a) Loop Status Request Sequence
b) LS_ACC or LS_RJT Reply Sequence

##### 12.3.2.21.3 Request Sequence

**Format:** FT_1

**Addressing:** The S_ID is the Nx_Port requesting status for the specified loop. The D_ID field shall be the Loop Fabric Address (LFA) of the loop for which status is being requested.

**Payload:** The format of the LSTS Payload is shown in table 97.

**Table 97 - LSTS Payload**

| Bits / Word | 31 .. 24 | 23 .. 16 | 15 .. 08 | 07 .. 00 |
|---|---|---|---|---|
| **0** | LSTS (hex ’72’) | hex '00' | hex '00' | hex '00' |

##### 12.3.2.21.4 Reply Sequence

**LS_RJT:** LS_RJT signifies the rejection of the LSTS command.

**LS_ACC:** LS_ACC supplies the requested status for the identified Loop. The format of the LS_ACC Payload is shown in table 98.

**Table 98 - LSTS LS_ACC Payload**

| Bits / Word | 31 .. 24 | 23 .. 16 | 15 .. 08 | 07 .. 00 |
|---|---|---|---|---|
| **0** | hex ’02’ | hex '00' | hex '00' | hex '00' |
| **1** | Reserved | Failed receiver | FC-FLA Compliance Level | Loop State |

Copyright International Organization for Standardization
Provided by IHS under license with ISO
No reproduction or networking permitted without license from IHS Not for Resale

**Table 98 - LSTS LS_ACC Payload**

| | | | |
|---|---|---|---|
| **2** | MSB | Current Public Loop Devices bit map (16 bytes) | |
| **..** | | | |
| **5** | | | LSB |
| **6** | MSB | Current Private Loop Devices bit map (16 bytes) | |
| **..** | | | |
| **9** | | | LSB |
| **10** | MSB | AL_PA Position Map (128 bytes) | |
| **..** | | | |
| **41** | | | LSB |

The Payload fields are defined as follows:

**a) Failed receiver field:** The Failed receiver field shall contain the AL_PA of the L_Port that detected the loop failure. This field is valid only if the Loop State indicates a Loop Failure. This field shall be set to hex '00' if the FL_Port detected the failure. This field shall be set to hex 'F7' if the Fabric Controller is unable to determine the port that detected the failure.

NOTE The Failed Receiver field is valid only if the Loop State indicates a Loop Failure. The Failed Receiver field shall contain the AL_PA of the L_Port that detected the loop failure.

**b) Compliance Level field:** The FC-FLA Compliance Level field shall contain the Compliance Level of the loop, as detected by the FL_Port. The format of the FC-FLA Compliance Level field is shown in table 99. See [9], FC-FLA for the meaning of the various compliance levels.

**Table 99 - FC-FLA Compliance Level**

| Level | Value |
|---|---|
| Reserved | 0 |
| FC-FLA Level A | 1 |
| FC-FLA Level B | 2 |
| Reserved | 3 to 255 |

Copyright International Organization for Standardization
Provided by IHS under license with ISO
No reproduction or networking permitted without license from IHS Not for Resale

**c) Loop State field:** The format of the Loop State field is shown in table 100.

**Table 100 - Loop State**

| State | Value |
|---|---|
| Reserved | 0 |
| Online – The loop is not performing Loop Initialization, and no Failure has been detected. | 1 |
| Loop Failure - A Loop Failure has been detected. The AL_PA that detected the failure is reported in the Failed receiver field. | 2 |
| Initialization Failure - The FL_Port has not been able to complete Loop Initialization. | 3 |
| Initializing - The loop is currently performing Loop Initialization. | 4 |
| Reserved | 5 to 255 |

**d) Current Public Loop Devices:** The format of the Current Public Loop Devices field follows the AL_PA bit mapped format defined in FC–AL-2. If a bit is set to one in this field, then a Loop Device that has performed FLOGI is present at the identified location. This field is valid only when the value in the Loop State field is Online.

**e) Current Private Loop Devices:** The format of the Current Private Loop Devices field follows the AL_PA bit mapped format defined in FC–AL-2. If a bit is set to one in this field, then a Loop Device is present at the identified location. This field is valid only when the value in the Loop State field is Online.

**f) AL_PA Position Map:** The format of the AL_PA Position Map field follows the AL_PA position map format defined in FC-AL-2 for the Loop Initialization Loop Position (LILP) Sequence. If Byte 0 of the first word of the AL_PA position map is set to zero, then no AL_PA position map is available. This field is valid only when the value in the Loop State field is Online.

### 12.3.2.22 Registered State Change Notification (RSCN)

#### 12.3.2.22.1 Introduction

A RSCN ELS shall be sent to registered Nx_Ports when an event occurs that may have affected the state of one or more Nx_Ports, or the ULP state within the Nx_Port. The term state is used here to refer to any condition of an Nx_Port that is considered important enough to notify other Nx_Ports of a change in that state. The definition of important is specific to an Nx_Port implementation, but should include the Login state or Link state. The RSCN additionally provides an indication of the change of state that is being reported.

RSCN is intended to provide a timely indication of changes in nodes to avoid the considerable traffic that polling may generate. RSCN may be used to indicate a failed node, allowing the release of resources tied up by the failed node. RSCN may also be used to notify interested nodes of new devices coming online, and of changes within an online node that affect the operation of the system (e.g., more storage has become available). The sender of the RSCN Request may coalesce several events into a single report.

A RSCN Request may be sent by the fabric to notify registered Nx_Ports of changes detected by the fabric. The Fabric Controller (hex 'FF FF FD') issues the RSCN Request to the registered Nx_Ports. An Nx_Port may also issue a RSCN Request to the Fabric Controller or another Nx_Port to indicate changes of state within the Nx_Port that are not otherwise detectable by the fabric.

Copyright International Organization for Standardization
Provided by IHS under license with ISO
No reproduction or networking permitted without license from IHS Not for Resale

The Payload of a RSCN Request includes a list containing the addresses of the affected Nx_Ports. The RSCN includes a summary indication of the type of state change being reported to assist in analyzing the change. The sending of RSCN between Nx_Ports, neither of which are the Fabric Controller, is permitted.

#### 12.3.2.22.2 RSCNs issued by the Fabric Controller

The Fabric Controller shall issue an RSCN Request to all registered Nx_Ports for an affected Nx_Port when the fabric detects an event. The Fabric Controller shall ensure that any Fabric-provided resources (e.g., the Name Service) have received updates to reflect changes caused by the event, prior to issuing the RSCN for the event. An event may include any of the following:

a) an implicit fabric Logout of the affected Nx_Port, including Loss-of-Signal, NOS, and OLS, or when the fabric receives a FLOGI that contains new or different information from a port that had already completed FLOGI;
b) a loop initialization of the affected L_Port, and the L_bit was set in the LISA Sequence;
c) a fabric Login from an affected Nx_Port not previously logged in;
d) the fabric path between the affected Nx_Port and any other Nx_Port has changed (e.g., a change to the fabric routing tables that affects the ability of the fabric to deliver frames in order, or an E_Port initialization or failure);
e) any other fabric-detected state change of the affected Nx_Port;
f) the affected Nx_Port issues an RSCN Request to the Fabric Controller.

A registered Nx_Port that receives an RSCN Request may perform any operation to determine the nature of the state change. These operations include the PDISC ELS, the ADISC ELS, a query to the Name Service, or a ULP query. The fabric may accumulate affected Nx_Port addresses for subsequent delivery to reduce the volume of RSCN traffic.

#### 12.3.2.22.3 RSCN issued by the affected Nx_Port

An Nx_Port shall issue an RSCN Request to the Fabric Controller or the Nx_Port that has registered for receipt of RSCN Requests or both when an event is detected by an Nx_Port. Fabric Controllers are implicitly registered to receive RSCNs after a successful implicit or explicit FLOGI. Nx_Ports, neither of which are the Fabric Controller, that request RSCNs are hereafter called registered Nx_Ports. Unless it is providing a service associated with a well known address an Nx_Port shall only issue RSCNs with an event qualifier of 02h or 00h. An event may include any of the following:

a) a failure within the affected Nx_Port;
b) any other important state change of the affected Nx_Port (e.g., an event defined by a FC-4).

#### 12.3.2.22.4 RSCN initiative

An affected Nx_Port shall issue one RSCN Request for all state changes that occur prior to the initiation of the RSCN Request; multiple RSCN Requests shall not be queued for initiation. An RSCN Request shall be considered initiated when the SOF of the first frame of the RSCN Request Sequence has been transmitted.

#### 12.3.2.22.5 RSCN registration

A node (Fabric Controller, service, Nx_Port) shall only issue RSCN requests to Nx_Ports that have registered with the node to be notified of state changes. These registrations shall be performed using the State Change Registration (SCR) ELS.

#### 12.3.2.22.6 Protocol

a) RSCN Request Sequence
b) LS_ACC or LS_RJT Reply Sequence

Copyright International Organization for Standardization
Provided by IHS under license with ISO
No reproduction or networking permitted without license from IHS Not for Resale

#### 12.3.2.22.7 Request Sequence

**Format:** FT_1

**Addressing:** If the fabric is using RSCN to notify a Registered Nx_Port of a state change (see 12.3.2.22.2), the S_ID is the Fabric Controller, (hex 'FF FF FD') and the D_ID is the address of the Registered Nx_Port destination. If an affected Nx_Port is using RSCN to notify the fabric or a Registered Nx_Port of a state change (see 12.3.2.22.3), the S_ID designates either the Nx_Port indicating a state change to the Fabric Controller or the Registered Nx_Port and the D_ID is either the Fabric Controller, (hex 'FF FF FD') or the address of the Registered Nx_Port destination.

**Payload:** The format of the RSCN Request Payload is shown in table 101.

**Table 101 - RSCN Payload**

| Bits / Word | 31 .. 24 | 23 .. 16 | 15 .. 08 | 07 .. 00 |
|---|---|---|---|---|
| **0** | RSCN (hex ’61’) | Page Length (hex '04') | Payload Length | |
| **1** | affected Port_ID pages (1 to 255 pages, 4 bytes each) | | | |
| **..** | | | | |
| **N** | | | | |

The RSCN Payload fields are defined as follows:

a) The Page Length field is the length in bytes of an affected Port_ID page. This value is fixed at hex ’04'.
b) The Payload Length field is the length in bytes of the entire Payload, inclusive of the word 0. This value shall be a multiple of 4 bytes. The minimum value of this field is 8 bytes. The maximum value of this field is 1024 bytes.
c) Affected Port_ID Pages: Each affected Port_ID page contains the ID of the Nx_Port, Fabric Controller, E_Port, domain, or area for which the event was detected. The RSCN Payload shall contain one or more of these pages. The generic format of the affected Port_ID page is shown in table 102.

**Table 102 - Generic affected Port_ID page**

| Bit in Byte / Byte | 7 | 6 | 5 | 4 | 3 | 2 | 1 | 0 |
|---|---|---|---|---|---|---|---|---|
| **0 (Bits 31 to 24)** | reserved | | RSCN Event Qualifier | | | | Address Format | |
| **1 (Bits 23 to 16)** | affected Port_ID byte 1 (Domain) | | | | | | | |
| **2 (Bits 15 to 08)** | affected Port_ID byte 2 (Area) | | | | | | | |
| **3 (Bits 07 to 00)** | affected Port_ID byte 3 (Port) Sequence | | | | | | | |

--`,,```,,,,````-`-`,,`,,`,`,,`---

Copyright International Organization for Standardization
Provided by IHS under license with ISO
No reproduction or networking permitted without license from IHS Not for Resale

RSCN Event Qualifier: The RSCN Event Qualifier values are shown in table 103.

**Table 103 - RSCN Event Qualifier values**

| RSCN event Qualifier | Value | | | |
|---|---|---|---|---|
| | Bit 5 | Bit 4 | Bit 3 | Bit 2 |
| Event is not specified | 0 | 0 | 0 | 0 |
| CHANGED NAME SERVER OBJECT - An object maintained by the Name Server has changed state for the port, area or domain indicated by the affected Port_ID. | 0 | 0 | 0 | 1 |
| CHANGED PORT ATTRIBUTE - An internal state of the port specified by the affected Port_ID has changed. The change of state is identified in a protocol specific manner. | 0 | 0 | 1 | 0 |
| CHANGED SERVICE OBJECT - An object maintained by the service identified by the well-known address contained in affected Port_ID has changed state. This Event Qualifier value shall not be used by services accessed through N_Port_ID that are not well-known addresses. | 0 | 0 | 1 | 1 |
| CHANGED SWITCH CONFIGURATION - Switch configuration has changed for the area or domain specified by the affected Port_ID. | 0 | 1 | 0 | 0 |
| Reserved | All Other Values | | | |

Address Format field: The format of the Address Format field is shown in table 104.

**Table 104 - Address Format**

| Format | Value |
|---|---|
| Port Address - Bytes 1, 2, and 3 of the affected Port_ID are valid and indicate a single Nx_Port or service with a well-known address. | 0 |
| Area Address Group - Bytes 1 and 2 of the affected Port_ID are valid and indicate a group of addresses that encompass an Area of E_Port or Nx_Port addresses. Byte 3 shall be zero. Any links and ports within the area may be affected. | 1 |
| Domain Address Group - Byte 1 of the affected Port_ID is valid and indicates a group of addresses that encompass a Domain. Bytes 2 and 3 shall be zero. Any links and ports within the domain may be affected. | 2 |
| Fabric Address Group - This format indicates a group of addresses that encompass the entire Fabric of Nx_Port addresses. Bytes 1, 2 and 3 shall be zero. Any links and ports within the area may be affected. | 3 |
| Reserved | 4 to 255 |

**12.3.2.22.8 Reply Sequence**

**LS_RJT:** LS_RJT signifies the rejection of the RSCN command

**LS_ACC:** LS_ACC signifies acceptance of the RSCN Request. The format of the LS_ACC Payload is shown in

--`,,```,,,,````-`-`,,`,,`,`,,`---

Copyright International Organization for Standardization
Provided by IHS under license with ISO
No reproduction or networking permitted without license from IHS Not for Resale

table 105.

**Table 105 - RSCN LS_ACC Payload**

| Bits / Word | 31 .. 24 | 23 .. 16 | 15 .. 08 | 07 .. 00 |
|---|---|---|---|---|
| **0** | hex ’02’ | hex '00' | hex '00' | hex '00' |

### 12.3.2.23 State Change Registration (SCR)

#### 12.3.2.23.1 Description

The SCR ELS shall request the Fabric Controller or Nx_Port to add the Nx_Port that is sending the SCR Request to the list of Nx_Ports registered to receive the RSCN ELS.

#### 12.3.2.23.2 Protocol

a) State Change Registration Request Sequence
b) LS_ACC or LS_RJT Reply Sequence

#### 12.3.2.23.3 Request Sequence

**Format:** FT_1

**Addressing:** The S_ID designates the Nx_Port requesting registration for State Change Notification. The D_ID designates either the Fabric Controller, hex 'FF FF FD', or the address of the Nx_Port from which RSCNs are desired.

**Payload:** The format of the SCR Request Payload is shown in table 106.

**Table 106 - SCR Payload**

| Bits / Word | 31 .. 24 | 23 .. 16 | 15 .. 08 | 07 .. 00 |
|---|---|---|---|---|
| **0** | SCR (hex ’62’) | hex '00' | hex '00' | hex '00' |
| | Reserved | | | Registration Function |

Copyright International Organization for Standardization
Provided by IHS under license with ISO
No reproduction or networking permitted without license from IHS Not for Resale

The format of the Registration Function field is shown in table 107.

**Table 107 - Registration Function**

| Function | Value |
|---|---|
| Reserved | 0 |
| Fabric Detected registration - Register to receive all RSCN Requests issued by the Fabric Controller for events detected by the fabric. | 1 |
| Nx_Port Detected registration - Register to receive all RSCN Requests issued for events detected by the affected Nx_Port. | 2 |
| Full registration - Register to receive all RSCN Requests issued. The RSCN Request shall return all affected N_Port_ID pages. | 3 |
| Reserved | 4 to 254 |
| Clear registration - Remove any current RSCN registrations. | 255 |

#### 12.3.2.23.4 Reply Sequence

**LS_RJT:** LS_RJT signifies the rejection of the SCR command.

**LS_ACC:** LS_ACC signifies acceptance of the SCR Request and registration for RSCN. The format of the LS_ACC Payload is shown in table 108.

**Table 108 - SCR LS_ACC Payload**

| Bits / Word | 31 .. 24 | 23 .. 16 | 15 .. 08 | 07 .. 00 |
|---|---|---|---|---|
| **0** | hex ’02’ | hex '00' | hex '00' | hex '00' |

### 12.3.2.24 Process login (PRLI)

#### 12.3.2.24.1 Introduction

The PRLI ELS shall be used to establish the operating environment between a group of related processes at the originating Nx_Port and a group of related processes at the responding Nx_Port. (see 16.1).

#### 12.3.2.24.2 Protocol

a) Process Login Request Sequence
b) LS_ACC or LS_RJT Reply Sequence

#### 12.3.2.24.3 Request Sequence

**Format:** FT_1

**Addressing:** The S_ID field designates the Nx_Port requesting Process Login. The D_ID field designates the destination Nx_Port of the Process Login.

Copyright International Organization for Standardization
Provided by IHS under license with ISO
No reproduction or networking permitted without license from IHS Not for Resale

**Payload:** The format of the Payload is shown in table 109.

**Table 109 - PRLI Payload**

| Bits / Word | 31 .. 24 | 23 .. 16 | 15 .. 08 | 07 .. 00 |
|---|---|---|---|---|
| **0** | PRLI (hex '20') | Page Length (hex '10') | Payload Length | |
| **1** | Service Parameter pages (4 words each page) | | | |
| **..** | | | | |
| **N** | | | | |

The Payload Field are defined as follows:

a) Page length: Byte 1 of word 0 contains an 8-bit value that specifies the length of each Service Parameter page. The right-most two bits shall be zeros.
b) Payload length: Bytes 2 to 3 of word 0 contain a 16-bit value that specifies the length of the PRLI Payload. The right-most two bits shall be zeros. The value specified shall be greater than or equal to 20, and less than or equal to 65 532.
c) Service parameter page(s): Words 1:N of the PRLI Payload contain one or more Service Parameter pages. Each Service Parameter page contains Service Parameters for a single image pair and is associated with either a single FC-4 TYPE or is common to all FC-4 TYPE codes for the specified image pair. The format of PRLI Service Parameter pages is specified in table 110.

**Table 110 - PRLI service parameter page format**

| Item | Word | Bit |
|---|---|---|
| TYPE Code or Common Service Parameters[a] | 0 | 31 to 24 |
| TYPE Code Extension | 0 | 23 to 16 |
| Originator Process_Associator Validity | 0 | 15 |
| Responder Process_Associator Validity | 0 | 14 |
| Establish Image Pair | 0 | 13 |
| Reserved | 0 | 12 to 0 |
| Originator Process_Associator | 1 | 31 to 0 |
| Responder Process_Associator | 2 | 31 to 0 |
| Service Parameters | 3 | 31 to 0 |

[a] If byte 0 of the first word of a Service Parameter page is set to the value hex '00', the Service Parameter page is common to all FC-4 Types at that image pair.

Copyright International Organization for Standardization
Provided by IHS under license with ISO
No reproduction or networking permitted without license from IHS Not for Resale

The PRLI service parameter page format fields are defined as follows:

a) Word 0, Bits 31 to 24 - TYPE code or common service parameters

Identifies the protocol associated with this Service Parameter page. If byte 0 of the first word of a Service Parameter page contains the value hex ’00’, the Service Parameter page contains Service Parameters common to all FC-4 Types at that image pair or Nx_Port pair. If byte 0 of the first word of a Service Parameter page contains the value other than hex ’00’, the Service Parameter page contains Service Parameters for the FC-4 TYPE indicated.

b) Word 0, Bits 23 to 16 - TYPE code extension
Reserved for future use.

c) Word 0, Bit 15 - Originator Process_Associator validity

0 = not meaningful
1 = meaningful

d) Word 0, Bit 14 - Responder Process_Associator validity

0 = not meaningful
1 = meaningful

e) Word 0, Bit 13 - Establish Image Pair

0 = Exchange Service Parameters only
1 = Establish image pair and exchange Service Parameters

f) Word 3, Bits 31 to 0 - Service parameters

No Common Service Parameters are currently specified.

**12.3.2.24.4 Reply Sequence**

**LS_RJT:** LS_RJT signifies rejection of the PRLI Request

**LS_ACC:** LS_ACC signifies successful completion of the PRLI Request. The format of the LS_ACC Payload is shown in table 111.

**Table 111 - PRLI LS_ACC Payload**

| Bits / Word | 31 .. 24 | 23 .. 16 | 15 .. 08 | 07 .. 00 |
|---|---|---|---|---|
| **0** | hex ’02’ | Page Length (hex ’10’) | Payload Length | |
| **1** | Service Parameter Response pages (4 words each page) | | | |
| **..** | | | | |
| **N** | | | | |

The LS_ACC Payload fields are defined as follows:

a) Page length:

Byte 1 of word 0 contains an 8-bit value that specifies the length of each Service Parameter Response page. The right-most two bits shall be zeros.

b) Payload length:

Bytes 2 to 3 of word 0 contain a 16-bit value that specifies the length of the PRLI LS_ACC Payload. The right-most two bits shall be zeros. The value specified shall be greater than or equal to 20, and less than or equal to 65 532.

c) Service parameter response page(s):

Words 1:N of the PRLI LS_ACC Payload contain one or more Service Parameter Response pages. Each Service Parameter Response page contains Service Parameter responses for a single image pair or

Copyright International Organization for Standardization
Provided by IHS under license with ISO
No reproduction or networking permitted without license from IHS Not for Resale

Nx_Port pair and is associated with a single FC-4 TYPE or common to all FC-4 Types at that image pair or Nx_Port pair.

The number of Service Parameter pages and the Payload Length field of the PRLI LS_ACC Reply Sequence shall match the number of Service Parameter pages and the Payload Length field of the PRLI Request Sequence.

The format of PRLI LS_ACC Service Parameter Response pages is described in table 112.

**Table 112 - PRLI LS_ACC service parameter response page format**

| Item | Word | Bit |
|---|---|---|
| TYPE Code or Common Service Parameters[a] | 0 | 31 to 24 |
| TYPE Code Extension | 0 | 23 to 16 |
| Originator Process_Associator Validity | 0 | 15 |
| Responder Process_Associator Validity | 0 | 14 |
| Image Pair Established | 0 | 13 |
| Reserved | 0 | 12 |
| Response Code (see table 113) | 0 | 11 to 8 |
| Reserved | 0 | 7 to 0 |
| Originator Process_Associator | 1 | 31 to 0 |
| Responder Process_Associator | 2 | 31 to 0 |
| Service Parameter Response | 3 | 31 to 0 |

[a] If byte 0 of the first word of a Service Parameter page is set to the value hex '00', the Service Parameter page is common to all FC-4 Types at that image pair.

The PRLI LS_ACC service parameter response page format fields are defined as follows:

a) Word 0, Bits 31 to 24 - TYPE code or common service parameters

Identifies the protocol associated with this Service Parameter Response page. If byte 0 of the first word of a Service Parameter Response page contains the value hex ’00’, the Service Parameter page contains Service Parameters common to all FC-4 Types at that image pair or Nx_Port pair. If byte 0 of the first word of a Service Parameter Response page contains a value other than hex ’00’, the Service Parameter page contains Service Parameters for the FC-4 TYPE indicated.

b) Word 0, Bits 23 to 16 - TYPE code extension

Reserved for future use.

c) Word 0, Bit 15 - Originator Process_Associator validity

0 = not meaningful
1 = meaningful

d) Word 0, Bit 14 - Responder Process_Associator validity

0 = not meaningful
1 = meaningful

--`,,```,,,,````-`-`,,`,,`,`,,`---

Copyright International Organization for Standardization
Provided by IHS under license with ISO
No reproduction or networking permitted without license from IHS Not for Resale

e) Word 0, Bit 13 - Image Pair Established

Image Pair Established is valid only if bit 13 was set to one on the corresponding Service Parameter page of the PRLI Request.

0 = Image pair not established, see response code for additional information
1 = Image pair established

f) Word 0, Bits 11 to 8 - Response code

The Response code field contains an encoded binary value indicating the result of the PRLI Request. The meanings of the encoded Response code values are shown in table 113.

g) Word 3, Bits 31 to 0 - Service parameter response

Provides feedback to the Originator as to the resultant state of the Service Parameters as returned by the Responder.

**Table 113 - PRLI accept response code**

| Encoded Value Word 0, Bits 11 to 8 | Description |
|---|---|
| ’0000’ b | Reserved |
| ’0001’ b | Request executed |
| ’0010’ b | The Exchange recipient has no resources available for establishing image pairs between the specified source and destination Nx_Ports. The PRLI Request may be retried. |
| ’0011’ b | Initialization is not complete for the Exchange recipient. The PRLI Request may be retried. |
| ’0100’ b | The Exchange recipient corresponding to the Responder Process_Associator specified in the PRLI Request and PRLI LS_ACC response does not exist. The PRLI Request shall not be retried. |
| ’0101’ b | The Exchange recipient has a predefined configuration that precludes establishing this image pair. The PRLI Request shall not be retried. |
| ’0110’ b | Request executed conditionally. Some Service Parameters were not able to be set to their requested state (see table 110) |
| ’0111’ b | The destination Nx_Port is unable to process multiple page PRLI Requests. The PRLI request may be retried as a single page request. |
| ’1000’ b | Service parameters are invalid |
| ’1001’ b to ’1111’ b | Reserved |

### 12.3.2.25 Process logout (PRLO)

#### 12.3.2.25.1 Description

The PRLO ELS shall be used to request invalidation of the operating environment between an image at the initiating Nx_Port and an image at the recipient Nx_Port. PRLO frees resources committed by a previous PRLI function. (see 16.2)

#### 12.3.2.25.2 Protocol

a) Process Logout Request Sequence

Copyright International Organization for Standardization
Provided by IHS under license with ISO
No reproduction or networking permitted without license from IHS Not for Resale

b) LS_ACC or LS_RJT Reply Sequence

#### 12.3.2.25.3 Request Sequence

**Format:** FT_1

**Addressing:** The S_ID field designates the Nx_Port requesting Process Logout. The D_ID field designates the destination Nx_Port of the Process Logout.

**Payload:** The format of the Payload is shown in table 114.

**Table 114 - PRLO Payload**

| Bits / Word | 31 .. 24 | 23 .. 16 | 15 .. 08 | 07 .. 00 |
|---|---|---|---|---|
| 0 | PRLO (hex '21') | Page Length (hex '10') | Payload Length | |
| 1 | | Logout Parameter pages (4 words each page) | | |
| .. | | | | |
| N | | | | |

The PRLO Payload fields shall be defined as follows:

a) Page length:

Byte 1 of word 0 contains an 8-bit value that specifies the length of each Logout Parameter page. The right-most two bits shall be zeros.

b) Payload length:

Bytes 2 to 3 of word 0 contain a 16-bit value that specifies the length of the PRLO Payload. The right-most two bits shall be zeros. The value specified shall be greater than or equal to 20, and less than or equal to 65 532.

Copyright International Organization for Standardization
Provided by IHS under license with ISO
No reproduction or networking permitted without license from IHS Not for Resale

c) Logout parameter page(s):

Words 1:N of the PRLO Payload contain one or more Logout Parameter pages. Each Logout Parameter page contains logout parameters for a single image pair and is associated with either a single FC-4 TYPE or is common to all FC-4 TYPE codes for the specified image pair.

The format of PRLO Logout Parameter pages is described in table 115.

**Table 115 - PRLO logout parameter page format**

| Item | Word | Bit |
|---|---|---|
| TYPE Code or Common Logout Parameters[a] | 0 | 31 to 24 |
| TYPE Code Extension | 0 | 23 to 16 |
| Originator Process_Associator Validity | 0 | 15 |
| Responder Process_Associator Validity | 0 | 14 |
| Reserved | 0 | 13 to 0 |
| Originator Process_Associator | 1 | 31 to 0 |
| Responder Process_Associator | 2 | 31 to 0 |
| Reserved | 3 | 31 to 0 |

[a] If byte 0 of the first word of a Logout Parameter page is set to the value hex ’00’, the Logout Parameter page is common to all FC-4 Types at that image pair.

The PRLO logout parameter page format fields shall be defined as follows:

a) Word 0, Bits 31 to 24 - TYPE code or common logout parameters

Identifies the protocol associated with this Logout Parameter page. If byte 0 of the first word of a Logout Parameter page contains the value hex ’00’, the Logout Parameter page contains Logout Parameters common to all FC-4 Types at that image pair or Nx_Port pair. If byte 0 of the first word of a Logout Parameter page contains the value other than hex ’00’, the Logout Parameter page contains Logout Parameters for the FC-4 TYPE indicated.

b) Word 0, Bits 23 to 16 - TYPE code extension

Reserved for future use.

c) Word 0, Bit 15 - Originator Process_Associator validity

0 = not meaningful
1 = meaningful

d) Word 0, Bit 14 - Responder Process_Associator validity

0 = not meaningful
1 = meaningful

**12.3.2.25.4 Reply sequence**

**LS_RJT:** LS_RJT signifies rejection of the PRLO Request

**LS_ACC:** LS_ACC signifies successful completion of the PRLO Request

Copyright International Organization for Standardization
Provided by IHS under license with ISO
No reproduction or networking permitted without license from IHS Not for Resale

**LS_ACC Payload:** The format of the LS_ACC Payload is shown in table 116.

**Table 116 - PRLO LS_ACC Payload**

| Bits / Word | 31 .. 24 | 23 .. 16 | 15 .. 08 | 07 .. 00 |
|---|---|---|---|---|
| **0** | hex ’02’ | Page Length (hex ’10’) | Payload Length | |
| **1** | Logout Parameter Response pages (4 words each page) | | | |
| **..** | | | | |
| **N** | | | | |

The PRLO LS_ACC Payload fields shall be defined as follows:

a) Page length:

Byte 1 of word 0 contains an 8-bit value that specifies the length of each Logout Parameter Response page. The right-most two bits shall be zeros.

b) Payload length:

Bytes 2 to 3 of word 0 contain a 16-bit value that specifies the length of the PRLO LS_ACC Payload. The right-most two bits shall be zeros. The value specified shall be greater than or equal to 20, and less than or equal to 65 532.

c) Logout parameter response page(s):

Words 1:N of the PRLO LS_ACC Payload contain one or more Logout Parameter Response pages. Each Logout Parameter Response page contains a logout parameter response for a single image pair and is associated with a single FC-4 TYPE or common to all FC-4 Types at that image pair or Nx_Port pair.

The number of Logout Parameter pages and the Payload Length field of the PRLO LS_ACC Reply Sequence shall match the number of Logout Parameter pages and the Payload Length field of the PRLO Request Sequence.

The format of PRLO LS_ACC Logout Parameter Response pages is described in table 117.

--`,,```,,,,````-`-`,,`,,`,`,,`---

Copyright International Organization for Standardization
Provided by IHS under license with ISO
No reproduction or networking permitted without license from IHS Not for Resale

**Table 117 - PRLO LS_ACC logout parameter response page format**

| Item | Word | Bit |
|---|---|---|
| TYPE Code or Common Logout Parameters[a] | 0 | 31 to 24 |
| TYPE Code Extension | 0 | 23 to 16 |
| Originator Process_Associator Validity | 0 | 15 |
| Responder Process_Associator Validity | 0 | 14 |
| Reserved | 0 | 13 to 12 |
| Response Code (see table 118) | 0 | 11 to 8 |
| Reserved | 0 | 7 to 0 |
| Originator Process_Associator | 1 | 31 to 0 |
| Responder Process_Associator | 2 | 31 to 0 |
| Reserved | 3 | 31 to 0 |

[a] If byte 0 of the first word of a Logout Parameter page is set to the value hex ’00’, the Logout Parameter page is common to all FC-4 Types at that image pair.

The PRLO LS_ACC logout parameter response page format fields shall be defined as follows:

a) Word 0, Bits 31 to 24 - TYPE code or common logout parameters

   Identifies the protocol associated with this Logout Parameter Response page. If byte 0 of the first word of a Logout Parameter Response page contains the value hex ’00’, the Logout Parameter page contains Logout Parameters common to all FC-4 Types at that image pair or Nx_Port pair. If byte 0 of the first word of a Logout Parameter Response page contains a value other than hex ’00’, the Logout Parameter page contains Logout Parameters for the FC-4 TYPE indicated.

b) Word 0, Bits 23 to 16 - TYPE code extension

   Reserved for future use.

c) Word 0, Bit 15 - Originator Process_Associator validity

   0 = not meaningful
   1 = meaningful

d) Word 0, Bit 14 - Responder Process_Associator validity

   0 = not meaningful
   1 = meaningful

e) Word 0, Bits 11 to 8 - Response code

   The Response code field contains an encoded binary value indicating the result of the PRLO Request and the status of the image pair. The meanings of the encoded Response code values are shown in table 118.

Copyright International Organization for Standardization
Provided by IHS under license with ISO
No reproduction or networking permitted without license from IHS Not for Resale

**Table 118 - PRLO accept response code**

| Encoded Value Word 0, Bits 11 to 8 | Description |
|---|---|
| ’0000’ b | Reserved |
| ’0001’ b | Request executed |
| ’0010’ b to ’0011’ b | Reserved |
| ’0100’ b | The Exchange recipient corresponding to the Responder Process_Associator specified in the PRLO Request and PRLO LS_ACC response does not exist. The PRLO Request shall not be retried. |
| ’0101’ b to ’0110’ b | Reserved |
| ’0111’ b | The destination Nx_Port is unable to process multiple page PRLO Requests. The PRLO Request may be retried as a single page request. |
| ’1000’ b | Service Parameters are invalid |
| ’1001’ b to ’1111’ b | Reserved |

#### 12.3.2.26 State change notification (SCN)

Obsolete

#### 12.3.2.27 Test Process Login State (TPLS)

##### 12.3.2.27.1 Description

The TPLS ELS shall be used to determine whether image pairs are established for the image pairs specified by the combination of the S_ID || Originator Process_Associator || D_ID || Responder Process_Associator. Upon receiving a TPLS Request, the receiving Nx_Port checks whether it has an image pair established for each specified image.

TPLS verifies the Login state for the source Nx_Port at the destination Nx_Port.

The LS_ACC Reply Sequence confirms the successful completion of the TPLS function and indicates whether or not an image pair is established for the source specified by the S_ID and image pair(s) contained in the Payload. The Payload of the LS_ACC Reply indicates the state of the image pair.

If the recipient Nx_Port is not logged in with the requesting port it shall reply with an LS_RJT ELS Sequence with a reason code of “Unable to perform command request” and a reason code explanation of “N_Port Login required”.

##### 12.3.2.27.2 Protocol

a) Test Process Login State Request Sequence
b) LS_ACC or LS_RJT Reply Sequence

##### 12.3.2.27.3 Request Sequence

**Format:** FT_1

**Addressing:** The S_ID field designates the source Nx_Port associated with the image pair. The D_ID field

Copyright International Organization for Standardization
Provided by IHS under license with ISO
No reproduction or networking permitted without license from IHS Not for Resale

designates the destination Nx_Port associated with the image pair.

**Payload:** The format of the Payload is shown in table 119.

**Table 119 - TPLS Payload**

| Bits / Word | 31 .. 24 | 23 .. 16 | 15 .. 08 | 07 .. 00 |
|---|---|---|---|---|
| **0** | TPLS (hex ’23’) | Page Length (hex ’10’) | Payload Length | |
| **1** | | Image Pair ID pages (4 words each page) | | |
| **..** | | | | |
| **N** | | | | |

a) Page length:

Byte 1 of word 0 contains an 8-bit value that specifies the length of each Image Pair ID page. The right-most two bits shall be zeros.

b) Payload length:

Bytes 2 to 3 of word 0 contain a 16-bit value that specifies the length of the TPLS Payload. The right-most two bits shall be zeros. The value specified shall be greater than or equal to 20, and less than or equal to 65 532.

c) Image pair ID page(s):

Words 1:N of the TPLS Payload contain one or more Image Pair ID pages. Each Image Pair ID page contains parameters required to identify a single image pair.

The format of Image Pair ID pages is described in table 120.

**Table 120 - TPLS image pair ID page format**

| Item | Word | Bit |
|---|---|---|
| Reserved | 0 | 31 to 16 |
| Originator Process_Associator Validity | 0 | 15 |
| Responder Process_Associator Validity | 0 | 14 |
| Reserved | 0 | 13 to 0 |
| Originator Process_Associator | 1 | 31 to 0 |
| Responder Process_Associator | 2 | 31 to 0 |
| Reserved | 3 | 31 to 0 |

A) Word 0, Bit 15 - Originator Process_Associator validity
0 = not meaningful
1 = meaningful

B) Word 0, Bit 14 - Responder Process_Associator validity
0 = not meaningful
1 = meaningful

Copyright International Organization for Standardization
Provided by IHS under license with ISO
No reproduction or networking permitted without license from IHS Not for Resale

#### 12.3.2.27.4 Reply sequence

**LS_RJT:** LS_RJT signifies rejection of the TPLS Request.

**LS_ACC:** LS_ACC signifies successful completion of the TPLS Request. The format of the LS_ACC Payload is shown in table 121.

**Table 121 - TPLS LS_ACC Payload**

| Bits / Word | 31 .. 24 | 23 .. 16 | 15 .. 08 | 07 .. 00 |
|---|---|---|---|---|
| **0** | (hex '02') | Page Length (hex '10') | Payload Length | |
| **1** | TPLS Response pages (4 words each page) | | | |
| **..** | | | | |
| **N** | | | | |

a) Page length:

Byte 1 of word 0 contains an 8-bit value that specifies the length of each Image Pair ID page. The right-most two bits shall be zeros.

b) Payload length:

Bytes 2 to 3 of word 0 contain a 16-bit value that specifies the length of the TPLS LS_ACC Payload. The rightmost two bits shall be zeros. The value specified shall be greater than or equal to 20, and less than or equal to 65 532.

Copyright International Organization for Standardization
Provided by IHS under license with ISO
No reproduction or networking permitted without license from IHS Not for Resale

c) TPLS response page(s):

Words 1:N of the TPLS Payload contain one or more Image Pair ID pages. Each TPLS Response page contains TPLS response information associated with a single image pair.

The number of Service Parameter pages and the Payload Length field of the TPLS LS_ACC Reply Sequence shall match the number of Service Parameter pages and the Payload Length field of the TPLS Request Sequence.

The format of TPLS Response pages is described in table 122.

**Table 122 - TPLS response page format**

| Item | Word | Bits |
|---|---|---|
| TPLS Response page | 0 to 3 | 31 to 0 |
| Reserved | 0 | 31 to 16 |
| Originator Process_Associator Validity | 0 | 15 |
| Responder Process_Associator Validity | 0 | 14 |
| Reserved | 0 | 13 to 12 |
| Response Code (see table 123) | 0 | 11 to 8 |
| Reserved | 0 | 7 to 0 |
| Originator Process_Associator | 1 | 31 to 0 |
| Responder Process_Associator | 2 | 31 to 0 |
| Reserved | 3 | 31 to 1 |
| Image Pair State | 3 | 0 |

A) Word 0, Bit 15 - Originator Process_Associator validity
0 = not meaningful
1 = meaningful

B) Word 0, Bit 14 - Responder Process_Associator validity
0 = not meaningful
1 = meaningful

Copyright International Organization for Standardization
Provided by IHS under license with ISO
No reproduction or networking permitted without license from IHS Not for Resale

C) Word 0, Bits 11 to 8 - Response code
The Response code field contains an encoded binary value indicating the result of the PRLI Request and the status of the image pair. The meanings of the encoded Response code values are shown in table 123.

**Table 123 - TPLS accept response code**

| Encoded Value Word 0, Bits 11 to 8 | Description |
|---|---|
| ’0000’ b | Reserved |
| ’0001’ b | Request executed |
| ’0010’ b to 0110’ b | Reserved |
| ’0111’ b | The destination Nx_Port is unable to process multiple page PRLI requests. The PRLI request may be retried as a single page request. |
| ’1000’ b to ’1111’ b | Reserved |

D) Word 3, Bit 0 - Image pair state
1 = image pair established
0 = image pair not established

### 12.3.2.28 Fibre Channel Address Resolution Protocol Request (FARP_REQ)

#### 12.3.2.28.1 Description

The FARP_REQ ELS shall be used to resolve Port_IDs of communicating Fibre Channel devices. A FARP_REQ may be used to retrieve a specific Nx_Port’s current Port_ID given an N_Port_Name, Node_Name or IP address by requesting either a FARP_REPLY ELS (see 12.3.2.29) and/or by indicating that the responding Nx_Port shall perform Login with the requesting Nx_Port.

A FARP_REQ Match shall be considered successful at the Recipient when the FARP_REQ Request is successfully received and recognized by an Nx_Port, and the requested Match Address Code Point is successful.

NOTE The values for R_CTL, TYPE and DF_CTL for FARP_REQ are incorrect in RFC 2625 (See [12]). The values specified in this standard should be used.

#### 12.3.2.28.2 Protocol

a) FARP_REQ Request Sequence
b) No Reply Sequence

#### 12.3.2.28.3 Request Sequence

**Format:** FT_1

**Addressing:** The S_ID designates the Requestor Nx_Port requesting addressing information, The D_ID is the Broadcast Alias_ID (hex 'FF FF FF').

Copyright International Organization for Standardization
Provided by IHS under license with ISO
No reproduction or networking permitted without license from IHS Not for Resale

**Payload:** The format of the FARP_REQ Request Payload is shown in table 124.

**Table 124 - FARP_REQ Request Payload Item**

| Bits / Word | 31 .. 24 | 23 .. 16 | 15 .. 08 | 07 .. 00 |
|---|---|---|---|---|
| **0** | FARP_REQ (hex '54') | hex '00' | hex '00' | hex '00' |
| **1** | Match Address Code Points | Requesting N_Port_ID | | |
| **2** | Responder Action | Responding N_Port_ID | | |
| **3** | MSB | Requesting Nx_Port N_Port_Name (8 bytes) | | |
| **4** | | | | LSB |
| **5** | MSB | Requesting Nx_Port Node_Name (8 bytes) | | |
| **6** | | | | LSB |
| **7** | MSB | Responding Nx_Port N_Port_Name (8 bytes) | | |
| **8** | | | | LSB |
| **9** | MSB | Responding Nx_Port Node_Name (8 bytes) | | |
| **10** | | | | LSB |
| **11** | MSB | Requesting Nx_Port IP Address (16 bytes) | | |
| **..** | | | | |
| **14** | | | | LSB |
| **15** | MSB | Responding Nx_Port IP Address (16 bytes) | | |
| **..** | | | | |
| **18** | | | | LSB |

a) Match Address Code Points:

The Match Address Code Points define what addresses to match based on these code points. The Match Address Code Points also indicate which Address fields shall be valid. The values of these code points are defined in table 125. The Match Address Code Points indicate which of the fields shall be specified, as defined in table 126.

b) Requesting N_Port_ID:

The Requesting N_Port_ID contains the address identifier of the Nx_Port issuing the FARP_REQ.

c) Responder Action:

The Responder Action defines the Responder action if the match requested by the Match Address Code Points is successful. These actions are defined in table 127.

d) Requesting Nx_Port N_Port_Name:

The Requesting Nx_Port N_Port_Name contains the N_Port_Name of the Nx_Port issuing the FARP_REQ.

e) Requesting Nx_Port Node_Name:

The Requesting Nx_Port Node_Name contains the Node_Name of the Nx_Port issuing the FARP_REQ.

f) Responding Nx_Port N_Port_Name:

The Responding Nx_Port N_Port_Name contains the N_Port_Name that the receiving Nx_Port compares with its own N_Port_Name to determine a Match.

g) Responding Nx_Port Node_Name:

The Responding Nx_Port Node_Name contains the Node_Name that the receiving Nx_Port compares with its own Node_Name to determine a Match.

--`,,```,,,,````-`-`,,`,,`,`,,`---

Copyright International Organization for Standardization
Provided by IHS under license with ISO
No reproduction or networking permitted without license from IHS Not for Resale

h) Requesting Nx_Port IP Address:

The Requesting Nx_Port IP address contains the IP address of the Nx_Port issuing the FARP_REQ. The format of the IP address is IPv6 (See [21], IP Version 6 Addressing Architecture).

i) Responding Nx_Port IP Address:

The Responding Nx_Port IP address contains the IP ad dress that the receiving Nx_Port compares with, its own IP address to determine a Match. The format of the IP address is IPv6 (See [21], IP Version 6 Addressing Architecture).

Copyright International Organization for Standardization
Provided by IHS under license with ISO
No reproduction or networking permitted without license from IHS Not for Resale

**Table 125 - FARP_REQ Match Address Code Points**

| Value | Definition |
|---|---|
| ’00000001’ b | The Match is successful if all of the following are true:<br>a) the N_Port_Name of the Nx_Port that receives the FARP_REQ equals the Responding N_Port_Name;<br>b) ignore the Responding Node_Name;<br>c) ignore the Responding IP address. |
| ’00000010’ b | The Match is successful if all of the following are true:<br>a) ignore the Responding N_Port_Name;<br>b) the Node_Name of the Nx_Port that receives the FARP_REQ equals the Responding Node_Name;<br>c) ignore the Responding IP address. |
| ’00000011’ b | The Match is successful if all of the following are true:<br>a) the N_Port_Name of the Nx_Port that receives the FARP_REQ equals the Responding N_Port_Name;<br>b) the Node_Name of the Nx_Port that receives the FARP_REQ equals the Responding Node_Name;<br>c) ignore the Responding IP address. |
| ’00000100’ b | The Match is successful if all of the following are true:<br>a) ignore the Responding N_Port_Name;<br>b) ignore the Responding Node_Name;<br>c) the IP address of the Nx_Port that receives the FARP_REQ equals the Responding IP address. |
| ’00000101’ b | The Match is successful if all of the following are true:<br>a) the N_Port_Name of the Nx_Port that receives the FARP_REQ equals the Responding N_Port_Name;<br>b) ignore the Responding Node_Name;<br>c) the IP address of the Nx_Port that receives the FARP_REQ equals the Responding IP address. |
| ’00000110’ b | The Match is successful if all of the following are true:<br>a) ignore the Responding N_Port_Name;<br>b) the Node_Name of the Nx_Port that receives the FARP_REQ equals the Responding Node_Name;<br>c) the IP address of the Nx_Port that receives the FARP_REQ equals the Responding IP address. |
| ’0000 0111’ b | The Match is successful if all of the following are true:<br>a) the N_Port_Name of the Nx_Port that receives the FARP_REQ equals the Responding N_Port_Name;<br>b) the Node_Name of the Nx_Port that receives the FARP_REQ equals the Responding Node_Name;<br>c) the IP address of the Nx_Port that receives the FARP_REQ equals the Responding IP address. |
| all others | Reserved |

Copyright International Organization for Standardization
Provided by IHS under license with ISO
No reproduction or networking permitted without license from IHS Not for Resale

**Table 126 - FARP_REQ Address Fields**

| Code Point Value | Requesting Nx_Port Port_Name | Requesting Nx_Port Node_Name | Requesting Nx_Port IP Address | Responding Nx_Port Port_Name | Responding Nx_Port Node_Name | Responding Nx_Port IP Address |
|---|---|---|---|---|---|---|
| ’00000001’ b | correct | ignored | ignored | correct | ignored | ignored |
| ’00000010’ b | ignored | correct | ignored | ignored | correct | ignored |
| ’00000011’ b | correct | correct | ignored | correct | correct | ignored |
| ’00000100’ b | ignored | ignored | correct | ignored | ignored | correct |
| ’00000101’ b | correct | ignored | correct | correct | ignored | correct |
| ’00000110’ b | ignored | correct | correct | ignored | correct | correct |
| ’00000111’ b | correct | correct | correct | correct | correct | correct |
| all others | Reserved | | | | | |

Legend:
"correct" means the value of the field shall be correct for the Nx_Port;
"ignored" means that the value shall be either zero, or any valid value, since the field is not examined for comparison.

**Table 127 - Responder Action**

| Value (hex) | Definition |
|---|---|
| hex ’00’ | Perform no action |
| hex ’01’ | If the Match is successful, the receiving Nx_Port shall perform Login with the Requesting N_Port_ID. |
| hex ’02’ | If the Match is successful, the receiving Nx_Port shall originate FARP_REPLY with the Requesting N_Port_ID. The receiving Nx_Port shall not perform Login with the Requesting N_Port_ID. |
| hex ’03’ | If the Match is successful, the receiving Nx_Port shall perform Login with the Requesting N_Port_ID; and, if the Login is successful, the receiving Nx_Port shall originate FARP_REPLY with the Requesting N_Port_ID. |
| all others | Reserved |

#### 12.3.2.28.4 Reply Sequence

None

### 12.3.2.29 Fibre Channel Address Resolution Protocol Reply (FARP_REPLY)

#### 12.3.2.29.1 Description

A FARP_REPLY ELS communicates the information solicited by a previously received FARP_REQ ELS. A FARP_REPLY ELS shall be generated if and only if the conditions specified in Table 127 are met.

Copyright International Organization for Standardization
Provided by IHS under license with ISO
No reproduction or networking permitted without license from IHS Not for Resale

NOTE The values for R_CTL, TYPE and DF_CTL for FARP_REQ are incorrect in RFC 2625 (see [12]). The values specified in this standard should be used.

#### 12.3.2.29.2 Protocol

a) FARP_REPLY Request Sequence
b) LS_ACC or LS_RJT Reply Sequence

#### 12.3.2.29.3 Request Sequence

**Format:** FT_1

**Addressing:** The S_ID designates the Responding Nx_Port providing addressing information. The D_ID designates the Requesting Nx_Port requesting addressing information.

**Payload:** The format of the FARP_REPLY Request Payload is shown in table 128.

**Table 128 - FARP_REPLY Request Payload**

| Bits / Word | 31 .. 24 | 23 .. 16 | 15 .. 08 | 07 .. 00 |
|---|---|---|---|---|
| **0** | FARP_REPLY (hex '55') | hex '00' | hex '00' | hex '00' |
| **1** | Match Address Code Points | Requesting N_Port_ID | | |
| **2** | Responder Action | Responding N_Port_ID | | |
| **3** | MSB | Requesting Nx_Port N_Port_Name (8 bytes) | | |
| **4** | | | | LSB |
| **5** | MSB | Requesting Nx_Port Node_Name (8 bytes) | | |
| **6** | | | | LSB |
| **7** | MSB | Responding Nx_Port N_Port_Name (8 bytes) | | |
| **8** | | | | LSB |
| **9** | MSB | Responding Nx_Port Node_Name (8 bytes) | | |
| **10** | | | | LSB |
| **11** | MSB | Requesting Nx_Port IP Address (16 bytes) | | |
| **..** | | | | |
| **14** | | | | LSB |
| **15** | MSB | Responding Nx_Port IP Address (16 bytes) | | |
| **..** | | | | |
| **18** | | | | LSB |

a) Match Address Code Points:

The Match Address Code Points define the address(es) that were matched. The values of these code points are defined in table 125. The value of this field shall equal the value sent in the corresponding FARP_REQ Request. The Match Address Code Points indicate which of the fields shall be specified, as defined in table 129.

Copyright International Organization for Standardization
Provided by IHS under license with ISO
No reproduction or networking permitted without license from IHS Not for Resale

b) Requesting N_Port_ID:

The Requesting N_Port_ID contains the address identifier of the Nx_Port that issued the FARP_REQ.

c) Responding N_Port_ID:

The Responding N_Port_ID contains the address identifier of the Nx_Port that is responding to the FARP_REQ.

d) Responder Action:

The Responder Action field shall be set to the same value as in the corresponding FARP_REQ.

e) Requesting Nx_Port N_Port_Name:

The Requesting Nx_Port N_Port_Name contains the N_Port_Name of the Nx_Port that issued the FARP_REQ.

f) Requesting Nx_Port Node_Name:

The Requesting Nx_Port Node_Name contains the Node_Name of the Nx_Port that issued the FARP_REQ.

g) Responding Nx_Port N_Port_Name:

The Responding Nx_Port N_Port_Name contains the N_Port_Name of the Nx_Port that is responding to the FARP_REQ.

h) Responding Nx_Port Node_Name:

The Responding Nx_Port Node_Name contains the Node_Name of the Nx_Port that is responding to the FARP_REQ.

i) Requesting Nx_Port IP Address:

The Requesting Nx_Port IP address contains the IP address of the Nx_Port that issued the FARP_REQ. The format of the IP address is IPv6 (See [21], IP Version 6 Addressing Architecture).

j) Responding Nx_Port IP Address:

The Responding Nx_Port IP address contains the IP ad-dress of the Nx_Port that is responding to the FARP_REQ. The format of the IP address is IPv6 (See [21], IP Version 6 Addressing Architecture).

--`,,```,,,,````-`-`,,`,,`,`,,`---

Copyright International Organization for Standardization
Provided by IHS under license with ISO
No reproduction or networking permitted without license from IHS Not for Resale

**Table 129 - FARP_REPLY Address Fields**

| Code Point Value | Requesting Nx_Port Port_Name | Requesting Nx_Port Node_Name | Requesting Nx_Port IP Address | Responding Nx_Port Port_Name | Responding Nx_Port Node_Name | Responding Nx_Port IP Address |
|---|---|---|---|---|---|---|
| ’00000001’ b | REQ | REQ | REQ | correct | ignored | ignored |
| ’00000010’ b | REQ | REQ | REQ | ignored | correct | ignored |
| ’00000011’ b | REQ | REQ | REQ | correct | correct | ignored |
| ’00000100’ b | REQ | REQ | REQ | ignored | ignored | correct |
| ’00000101’ b | REQ | REQ | REQ | correct | ignored | correct |
| ’00000110’ b | REQ | REQ | REQ | ignored | correct | correct |
| ’00000111’ b | REQ | REQ | REQ | correct | correct | correct |
| all others | Reserved | | | | | |

Legend:
“correct” means the value of the field shall be correct for the Nx_Port;
“ignored” means that the value shall be either the correct value, zero, or any valid value, since the field was not examined for comparison;
“REQ” means that the value shall be equal to the value sent in the corresponding FARP_REQ Request.

#### 12.3.2.29.4 Reply Sequence

**LS_RJT:** LS_RJT signifies rejection of the FARP_REPLY command (see 12.3.2.29).

**LS_ACC:** LS_ACC signifies that the Nx_Port has transmitted the requested data. The format of the LS_ACC Payload is shown in table 130.

**Table 130 - FARP_REPLY LS_ACC Payload**

| Bits / Word | 31 .. 24 | 23 .. 16 | 15 .. 08 | 07 .. 00 |
|---|---|---|---|---|
| **0** | hex ’02’ | hex '00' | hex '00' | hex '00' |

### 12.3.2.30 Request Node Identification Data (RNID)

#### 12.3.2.30.1 Introduction

The RNID ELS is an ELS for acquiring Node Identification Data. The normal response shall be an Accept (ACC) ELS Sequence with Node Identification Data in its payload. If the recipient Nx_Port or FL_Port does not support the RNID ELS, it shall reply with an LS_RJT ELS Sequence with a reason code of “Command not supported”. If the recipient Nx_Port or FL_Port does not support the requested Node Identification Data format, it shall either reply with an LS_RJT ELS Sequence with a reason code of “Unable to perform command request” and reason-code explanation of “unable to supply requested data” or reply with an Accept ELS Payload containing only the Common Identification Data.

If an Nx_Port sends an RNID ELS and receives an LS_RJT Sequence with a reason code of “Unable to perform command request” and reason code explanation of “Unable to supply requested data”, the ULP may cause the Nx_Port to retry the RNID ELS with a different Node Identification Data Format request if an Nx_Port sends an

Copyright International Organization for Standardization
Provided by IHS under license with ISO
No reproduction or networking permitted without license from IHS Not for Resale

RNID ELS and receives a reply with an Accept ELS containing only Common Identification Data (see Table 135) in its payload, the ULP usage of the Common Identification Data and any further discovery processing is beyond the scope of this standard.

N_Port Login shall not be required prior to sending the RNID ELS.

The RNID ELS may be sent to any Nx_Port or FL_Port in the Fabric. If the destination is known to be a FL_Port, then the RNID ELS shall be sent to the Fabric Controller (hex 'FF FF FD'). If an RNID ELS is sent to the Fabric Controller (hex 'FF FF FD'), the reply shall represent the fabric controller node that contains the FL_ Port to which the requesting FC port is attached. If the receiving FC port has been determined to be an Nx_Port, then the RNID ELS shall be sent to that Nx_Port.

**12.3.2.30.2 Protocol:**

a) Request Node-Identification (RNID) request Sequence
b) LS_ACC or LS_RJT Reply Sequence

**12.3.2.30.3 Request Sequence**

**Addressing:** The S_ID field designates the requesting source port or the Fabric Controller (hex 'FF FF FD'). The D_ID field designates the Nx_Port or FL_Port receiving the RNID request or the Fabric Controller (hex 'FF FF FD').

**Format:** FT_1

**Payload:** The format of the RNID Payload is shown in table 131.

**Table 131 - RNID Payload**

| Bits / Word | 31 ... 24 Byte 0 | 23 ... 16 Byte 1 | 15 ... 08 Byte 2 | 07 ... 00 Byte 3 |
|---|---|---|---|---|
| **0** | RNID (hex '78') | hex '00' | hex '00' | hex '00' |
| **1** | Node Identification Data Format | Reserved | | |

**Node Identification Data Format:** The format of the Node Identification Data field is shown in table 132.

**Table 132 - Node Identification Data Format**

| Value | Description |
|---|---|
| hex '00' | Shall be set when the requesting Nx_Port does not want Specific Node Identification Data (see table 135). This allows the RNID Accept Payload to return any Specific-coded value in the Node Identification Data Format field. |
| hex '01' to hex 'DE' | Shall be set to the Specific-coded value when requesting data for a specific ULP (e.g., FCP-3 (See [9]). Shall use the TYPE codes defined in table 30. |
| hex 'DF' | Shall be used if the General Topology Discovery format (see 12.3.2.31) is to be returned in the RNID Accept Payload. |
| hex 'E0' to hex 'FF' | Shall be used to indicate that Specific Node Identification Data in a vendor specific format is to be returned. |

--`,,```,,,,````-`-`,,`,,`,`,,`---
Copyright International Organization for Standardization
Provided by IHS under license with ISO
No reproduction or networking permitted without license from IHS
Not for Resale

**12.3.2.30.4 Reply Sequence:**

**LS_RJT:** Signifies the rejection of the RNID request

**LS_ACC:** Signifies acceptance of the RNID request and presents Node Identification Data Format. The format of the Accept Payload is shown in table 133.

**Table 133 - RNID Accept Payload**

| Bits / Word | 31 ... 24 Byte 0 | 23 ... 16 Byte 1 | 15 ... 08 Byte 2 | 07 ... 00 Byte 3 |
|---|---|---|---|---|
| **0** | hex ’02’ | hex '00' | hex '00' | hex '00' |
| **1** | Node Identification Data Format | Common Identification Data Length (0 or 16) | Reserved | Specific Identification Data Length |
| **2** | | Common Identification Data (0 bytes or 16 bytes) | | |
| **...** | | | | |
| **5** | | | | |
| **6** | | Specific Identification Data (m) (0 - max. bytes) | | |
| **...** | | | | |
| **m** | | | | |

a) Node Identification Data Format:

The value of the Node Identification Data Format field is shown in table 134.

**Table 134 - Node Identification Data Format**

| Value | Description |
|---|---|
| hex '00' | The RNID Accept Payload only contains the Common Identification Data (see Table 135). |
| hex '01' to hex 'DE' | The RNID Accept Payload may contain the Common Identification Data and shall contain the Specific Identification Data for the ULP that is assigned an FC-4 frame type (see table 30) equal to the value of the Node Identification Data Format from the RNID Payload (see Table 132). |
| hex ’DF’ | The RNID Accept Payload shall contain the Common Identification Data and General Topology Discovery format Specific Identification Data. |
| hex 'E0' to hex 'FF' | The RNID Accept Payload may contain the Common Identification Data and shall contain vendor specific Specific Identification Data. |

b) Common Identification Data Length:

When Common Node Identification Data is included in the RNID Accept payload, the Common Identification-Data length shall specify 16 bytes as the size of the Common Identification-Data field. When the ULP indicates in the Node Identification Data Format that no (see table 134) Common Node Identification Data is to be included in the RNID Accept payload, the Common Identification-Data length shall be set to zero.

Copyright International Organization for Standardization
Provided by IHS under license with ISO
No reproduction or networking permitted without license from IHS Not for Resale

c) Specific Identification Data Length:

The Specific Identification Data Length field indicates the number of bytes in the Specific Identification-Data field. The length is determined by the Node Identification Data Format requested for the respective ULP. This value shall be a multiple of 4. The minimum value of this field is zero bytes. The maximum value of this field is 252 bytes.

d) Common Identification-Data:

The format of the Common Identification Data field is shown in table 135.

**Table 135 - Common Identification Data**

| Bits / Word | 31 ... 24 Byte 0 | 23 ... 16 Byte 1 | 15 ... 08 Byte 2 | 07 ... 00 Byte 3 |
|---|---|---|---|---|
| 0 | MSB | N_Port_Name (8 bytes) | | |
| 1 | | | | LSB |
| 2 | MSB | Node_Name (8 bytes) | | |
| 3 | | | | LSB |

A) N_Port_Name:
The N_Port_Name field provides the Name_Identifier (See 15.6.3 and 15.6.4) of the Nx_Port or FL_Port to which the RNID ELS was directed.

B) Node_Name:
The Node_Name field provides the Name_Identifier (See 15.6.3 and 15.6.4) of the node associated with the Nx_Port or FL_Port indicated in the N_Port_Name field.

e) Specific Identification Data:

The format of the Specific Identification Data field shall be dependent on the Node Identification Data Format field (see Table 132). If the value of the Node Identification Data Format field is set to hex 'DF' see 12.3.2.31. For all other values of the Node Identification Data Format field the standard for the related ULP defines the format, fields used, and size of the parameters.

NOTE The information in the Specific Identification Data should only be used to determine the product identity of a node. The information in the Specific Identification Data should not be used to determine the functional characteristics or the service capabilities of a node.

**General Topology Discovery format:** When the Node Identification Data Format field in the RNID LS_ACC Payload (see table 134) indicates the General Topology Discovery format (hex 'DF') the RNID LS_ACC payload shall contain the following:

a) Node Identification Data Format field set to hex 'DF';
b) Common Identification-Data length set to 16;
c) Specific Identification-Data length set to 52;
d) Common Node Identification Data (see table 135);

Copyright International Organization for Standardization
Provided by IHS under license with ISO
No reproduction or networking permitted without license from IHS Not for Resale

e) Specific Identification Data (see table 136).

**Table 136 - General Topology Specific Identification Data**

| Bits / Word | 31 ... 24 Byte 0 | 23 ... 16 Byte 1 | 15 ... 08 Byte 2 | 07 ... 00 Byte 3 |
|---|---|---|---|---|
| **0** | MSB | Vendor Unique (16 bytes) | | |
| **...** | | | | |
| **3** | | | | LSB |
| **4** | Associated Type | | | |
| **5** | Physical Port Number | | | |
| **6** | Number of Attached Nodes | | | |
| **7** | Node Management | IP Version | UDP/TCP Port Number | |
| **8** | MSB | IP Address (16 bytes) | | |
| **...** | | | | |
| **11** | | | | LSB |
| **12** | Reserved | | Vendor Specific | |

A) Associated Type:
The Associated Type (see table 136) is the type of Fibre Channel functionality associated with the node of the Nx_Port or FL_Port receiving the RNID request (e.g., switch, hub, storage device).

B) Physical Port Number:
A vendor unique value that identifies the physical port that has a Fibre Channel link attached.

C) Number of Attached Nodes:
The number of nodes attached to the Nx_Port, Fx_Port, or L_Port receiving the RNID request. The minimum value is one. The maximum value is 126. For any Nx_Port receiving the RNID, the Number of Attached Nodes shall be set to one. For any FL_Port receiving the RNID, the Number of Attached Nodes shall be set to the number of nodes known to that FL_Port (i.e., the number of loop devices know to that FL_Port).

D) Node Management:
The Node Management field contains the protocol by which a Node Management Entity for the responding node may be accessed (see table 139).

--`,,```,,,,````-`-`,,`,,`,`,,`---

Copyright International Organization for Standardization
Provided by IHS under license with ISO
No reproduction or networking permitted without license from IHS Not for Resale

.

**Table 137 - Associated Type**

| Value - hex | Type |
|---|---|
| hex '00 00 00 00' | Reserved |
| hex '00 00 00 01' | Unknown |
| hex '00 00 00 02' | Other (none of the following) |
| hex '00 00 00 03' | Hub |
| hex '00 00 00 04' | Switch |
| hex '00 00 00 05' | Gateway |
| hex '00 00 00 06' | Obsolete |
| hex '00 00 00 07' | Obsolete |
| hex '00 00 00 09' | Storage device (i.e., disk drive, CD-ROM drive, tape drive). |
| hex '00 00 00 0A' | Host |
| hex '00 00 00 0B' | Storage subsystem (e.g., raid, library) |
| hex ’00 00 00 0E’ | Storage Access Device (e.g., Media changer) |
| hex ’00 00 00 11’ | NAS server |
| hex ’00 00 00 12’ | Bridge |
| hex ’00 00 00 13’ | Virtualization device |
| hex ’xx xx xx FF’ | Multi-function device (see Table 138 for values to fill in for xx xx xx) |
| All Others | Reserved |

--`,,```,,,,````-`-`,,`,,`,`,,`---

Copyright International Organization for Standardization
Provided by IHS under license with ISO
No reproduction or networking permitted without license from IHS Not for Resale

**Table 138 - Multi-function device bit definitions**

| Bit position | Function |
|---|---|
| 31 | Hub |
| 30 | Switch |
| 29 | Gateway |
| 28 | Storage device |
| 27 | Host |
| 26 | Storage subsystem |
| 25 | Storage access device |
| 24 | Wavelength division multiplexer |
| 23 | NAS server |
| 22 | Bridge |
| 21 | Virtualization device |
| 20 to 8 | Reserved |

**Table 139 - Node Management**

| Value | Protocol | Reference |
|---|---|---|
| hex ’0’0 | IP/UDP/SNMP | See [16], RFC 791; [22], RFC 2460; [15], RFC 768; [19], RFC 1157, and [20], RFC 1901 |
| hex ’01’ | IP/TCP/Telnet | See [16], RFC 791; [22], RFC 2460; [17], RFC 793 and [18], RFC 854 |
| hex ’02’ | IP/TCP/HTTP | See [16], RFC 791; [22], RFC 2460; [17], RFC 793, and [23], RFC 2616 |
| hex ’03’ | IP/TCP/HTTPS | See [16], RFC 791; [22], RFC 2460; [17], RFC 793; and [24], RFC 2818 |
| hex ’04’ | IP/TCP/HTTP/ XML | See [16], RFC 791; [22], RFC 2460; [17], RFC 793; [23], RFC 2616, CIM[a], XML[b] CIM-XML[c], and CIM-HTTP[d] |
| hex ’05 to hex ’FF’ | Reserved | |

[a] Distributed Management Task Force, *Common Information Model (CIM) in XML*, Version 2.2, June 14, 1999

[b] World Wide Web consortium, *Extensible Markup Language (XML) 1.0*, Second Edition, October, 6, 2000

[c] Distributed Management Task Force, *Specification for the Representation of CIM in XML (CIM-XML),* Version 2.0, July 20, 1999

[d] Distributed Management Task Force, *Specification for CIM Operations over HTTP (CIM-HTTP),* Version 1.0, August 11, 1999

Copyright International Organization for Standardization
Provided by IHS under license with ISO
No reproduction or networking permitted without license from IHS Not for Resale

E) IP Version:
The IP versions are shown in table 140.

**Table 140 - IP Version**

| Value | Version | Description |
|---|---|---|
| hex ’00’ | None | Indicates that this port is not providing IP support, and the Node Management, UDP Port, and IP Address fields shall be ignored. |
| hex ’01’ | IPv4 (IP version 4) | See RFC 791 |
| hex ’02’ | IPv6 (IP version 6) | See RFC 2460 |
| hex’ 03’ to hex ’FF’ | Reserved | |

F) UDP/TCP Port Number:
The numerical value used in UDP (See [15], RFC 768) or TCP (See [17], RFC 793) to distinguish among multiple destinations at the same IP address.

G) IP Address:
The IP address by which a Node Management Entity for the responding node may be reached. If the IP version field is set to one, the IPv4 address shall be stored in the least significant word of the IP field and the remainder shall be set to zero.

### 12.3.2.31 Registered Link Incident Report (RLIR)

#### 12.3.2.31.1 Description

The following terms are used to reference the ports, nodes, and records related to link incident reporting:

a) incident port: The port on which the link incident occurred and that detected the link incident.
b) connected port or connected node: The port or node connected directly to the incident port by a Fibre Channel link.
c) reporting port: The port that sends the Link Incident Record.
d) registered port: A port that is registered with the incident port to receive link incident reports.
e) reporting node: The node that creates the Link Incident Record describing the incident on the incident port.

The RLIR ELS shall provide a method for a reporting Nx_Port to send a Link Incident Record to a registered Nx_Port. The normal response to an RLIR ELS Sequence shall be a LS_ACC ELS Sequence with no Payload. If the recipient Nx_Port does not support the RLIR ELS, it shall reply with an LS_RJT ELS Sequence with a reason code of “Command not supported”. If the recipient Nx_Port is unable to accept the specified Link Incident Record type, it shall reply with an LS_RJT ELS Sequence with a reason code of “Unable to perform command request”. If the recipient Nx_Port is not logged in with the requesting port it shall reply with an LS_RJT ELS Sequence with a reason code of “Unable to perform command request” and a reason code explanation of “N_Port Login required”, or a LOGO ELS.

A port shall recognize a link incident when a condition is detected for which an incident code is defined. When a link incident is recognized and a recipient of Link Incident Records is registered for the incident port, a Link Incident Record that contains information related to the link incident shall be created. When a Link Incident Record is generated, the reporting port shall use the link incident reporting procedure to pass the Link Incident Record to a registered port. The link incident reporting mechanism, if any, for a port that does not use this link incident reporting procedure is beyond the scope of this standard.

#### 12.3.2.31.2 Link Incident reporting procedure

The incident port's reporting node shall generate one Link Incident Record for each link incident. The number of

Copyright International Organization for Standardization
Provided by IHS under license with ISO
No reproduction or networking permitted without license from IHS Not for Resale

Link Incident Records a reporting node may hold is vendor specific. If the incident port's reporting node attempts to generate a Link Incident Record but does not have resources to hold the record, the oldest Link Incident Record shall be discarded, and the new Link Incident Record shall be retained.

The port selected as the reporting port by the reporting node shall present the Link Incident Records by sending RLIR ELSs to ports registered as valid recipients of Link Incident Records. After sending all required RLIR ELSs containing the Link Incident Record, the port may discard the Link Incident Record.

The reporting port shall select ports from the registrant list for each Link Incident Record Format. The RLIR shall first be sent to all registered ports that have registered to always receive RLIRs. If no registered ports are registered to always receive RLIR or if RLIR was not successfully transmitted to at least one of those ports registered to always receive RLIRs, then the reporting port shall send the RLIR to a registered port selected from among those that have registered to conditionally receive RLIR. If RLIR is not successfully transmitted to the selected registered port registered to conditionally receive RLIR, the sending port shall select another port, if any, from the established registration list. The RLIR ELS is considered successfully transmitted if a LS_ACC is received for the RLIR within 2xR_A_TOV.

If a reporting port is not able to successfully deliver a RLIR ELS to a registered port, the registered port's registration for the incident port may be discarded. If a reporting node is not able to successfully deliver an RLIR ELS through a particular reporting port, it may select a different reporting port and try again. If no registration is established, it is vendor specific as to whether the incident port's reporting node generates and retains or discards the Link Incident Record.

#### 12.3.2.31.3 Protocol

a) RLIR Request Sequence
b) LS_ACC or LS_RJT Reply Sequence

#### 12.3.2.31.4 Request Sequence

**Format:** FT_1

**Addressing:** The S_ID designates the reporting port that is providing the Link Incident Record. The D_ID field designates the registered port.

**Payload:** The format of the RLIR Payload is shown in table 141.

--`,,```,,,,````-`-`,,`,,`,`,,`---

Copyright International Organization for Standardization
Provided by IHS under license with ISO
No reproduction or networking permitted without license from IHS Not for Resale

**Table 141 - RLIR Payload**

| Bits / Word | 31 .. 24 | 23 .. 16 | 15 .. 08 | 07 .. 00 |
|---|---|---|---|---|
| **0** | RLIR (hex '79') | hex '00' | hex '00' | hex '00' |
| **1** | Link Incident Record Format | Common Link Incident Record Length | Common Link Incident-Descriptor Length | Specific Link Incident Record Length |
| **2** | MSB | Common Link Incident Record (m) (m=4 or 16) | | |
| **..** | | | | |
| **m** | | | | LSB |
| **m+1** | Common Link Incident Descriptor | | | |
| | IQ | IC | EPAI (domain/area of ILS) | |
| **m+2** | | Specific Link Incident Record (0-max. bytes) | | |
| **..** | | | | |
| **n** | | | | |

The RLIR Payload fields shall be defined as follows:

a) **Link Incident Record Format:** The format of the Link Incident Record-Format field is shown in table 142.

**Table 142 - Link Incident Record Format**

| Description | Value |
|---|---|
| Common Link Incident Record | hex '00' |
| Specific-coded value | hex '01' to hex 'FF' |

The Specific-coded value field of the Link Incident Record Format shall be set to the FC-4 Type code registered by the client that is being presented with the incident record (e.g., see [9], FCP-3). The Specific-coded value uses the TYPE codes FC-4 defined in Table 28. A value of zero in the Specific-coded value field indicates that only the Common Link Incident Record and the Common Link Incident Descriptor are being reported and that the Specific Link Incident Record Length shall be zero.

b) **Common Link Incident Record Length:** When only the incident port's Name_Identifiers (i.e., the N_Port_Name and the Node_Name) are included in the RLIR ELS Payload, the Common Link Incident Record length shall specify 16 bytes, indicating the size of the Common Link Incident Record field. When the additional Common Link Incident Record fields are included in the Payload, the Common Link Incident Record Length shall specify 64 bytes. The link identified by the N_Port_Name and the Node_Name shall be one end of the link for which the report is being made. The report may be passed through that link or by any other path to the node that has registered to receive RLIR ELSs.

c) **Common Link Incident Descriptor Length:** The Common Link Incident Descriptor length shall be set to 4 bytes specifying the number of bytes in the Link Incident Descriptor field.

d) **Specific Link Incident Record Length:** The Specific Link Incident Record Length shall be specified according to the Link Incident Record Format indicated for the respective ULP. The length shall specify the number of bytes in the Specific Link Incident Record field. This value shall be a multiple of 4. The minimum value of this field is 0 bytes. The maximum value of this field is 252 bytes.

e) **Common Link Incident Record:** The Common Link Incident Record shall contain the unit's Name_Identifiers (i.e., the N_Port_Name and the Node_Name), as shown in table 143. The Common Link Incident Record may optionally contain the additional fields shown in table 143. Optional fields that have

--`,,```,,,,````-`-`,,`,,`,`,,`---
Copyright International Organization for Standardization
Provided by IHS under license with ISO
No reproduction or networking permitted without license from IHS
Not for Resale

unknown values shall be set to zero. The Common Link Incident Record Data Fields shall be defined as follows:

A) **Incident port N_Port Name:** The Name_Identifier that is the incident port's N_Port_Name.
B) **Incident port Node_Name:** The Name_Identifier that is the incident port's Node_Name.

**Table 143 - Common Link Incident Record Data**

| Bits / Word | 31 .. 24 | 23 .. 16 | 15 .. 08 | 07 .. 00 |
|---|---|---|---|---|
| 0 | MSB | Incident port N_Port_Name (Mandatory) | | |
| 1 | | | | LSB |
| 2 | MSB | Incident port Node_Name | | |
| 3 | | | | LSB |
| 4 | Incident Port Type (Optional) | Incident Port_ID | | |
| 5 | MSB | Connected port N_Port_Name | | |
| 6 | | | | LSB |
| 7 | MSB | Connected port Node_Name | | |
| 8 | | | | LSB |
| 9 | MSB | Fabric_Name | | |
| 10 | | | | LSB |
| 11 | Incident Physical Port number | | | |
| 12 | Transaction ID | | | |
| 13 | reserved | | | Time Stamp Format |
| 14 | MSB | Time Stamp | | |
| 15 | | | | LSB |

C) **Incident Port Type:** The value in the Incident Port Type field specifies the type of the incident port. Port Type values are defined in FC-GS-3. A value of zero in the field indicates the Incident Port Type is unknown or unspecified.
D) **Incident Port_ID:** The N_Port_ID of the incident port. All ports shall supply a valid Domain address (bits 23 to 16). Ports that do not have complete N_Port_ID may use zeros for the lower two bytes. A value of all zero in the Port_ID field indicates the Port_ID is unknown or unspecified.
E) **Connected Port N_Port_Name:** The Name_Identifier that is the connected port's N_Port_Name.
a)If the incident port is an L_Port in a private loop, the connected port shall be the port associated with the link incident, if known.
b)If the incident port is an L_Port in a public loop, the connected port shall be the FL_Port.
c)If the incident port is an Nx_Port connected to a fabric, the connected port shall be the F_Port.
d)If the incident port is an FL_Port, the connected port shall be the port associated with the link incident, if known.
e)If the connected port's N_Port_Name is unknown or unspecified, the Connected Port N_Port_Name may be zero
F) **Connected Port Node_Name:** The Name_Identifier that is the Node_Name of the port described by the Connected Port N_Port_Name. If the connected port is an Fx_Port, the Node_Name may be the Fabric_Name, the Node_Name of the local fabric element, or unspecified. If the Node_Name is unknown or unspecified, the corresponding field shall be zero.
G) **Fabric_Name:** The Fabric_Name of the incident port's fabric. For Nx_Port devices this is the value obtained in the FLOGI LS_ACC Payload. Private loop devices do not have a Fabric_Name and shall report zeros.

Copyright International Organization for Standardization
Provided by IHS under license with ISO
No reproduction or networking permitted without license from IHS Not for Resale

H) **Incident Physical Port Number:** The vendor specific identification of the incident port within the unit having Fibre Channel ports. When this field is presented in the Common Link Incident Record, the Incident Physical Port Number shall be valid.

I) **Transaction ID:** A 32-bit value that starts at one and is incremented by one for each link incident record generated by the reporting node. Applications receiving link incident records may use this value to eliminate duplicates or detect missing records. The value of zero shall be used only to indicate that the Transaction ID is unknown or unspecified.

J) **Time Stamp Format:** This field specifies the format of the Time Stamp field as shown in table 144.

K) **Time Stamp:** The time stamp value in the format specified by the Time Stamp Format field. If the Time Stamp Format value is 0, the Time Stamp field is unknown or unspecified and may have any value.

.

**Table 144 - Time Stamp Format values**

| Value | Meaning |
|---|---|
| hex ’00’ | The Time Stamp field is unknown or unspecified. |
| hex ’01’ | Time Server: The 64 bit time stamp is reported in units of seconds and fractions of a second. The time stamp uses the value obtained from the Time Server (See [6], FC-GS-4). |
| hex ’02’ | Clock synchronization format: The 64-bit time stamp is reported as defined for the Clock Synchronization Update (CSU) ELS. |
| hex ’03’ to hex ’FF’ | reserved |

**f) Common Link Incident Descriptor**

--`,,```,,,,````-`-`,,`,,`,`,,`---

Copyright International Organization for Standardization
Provided by IHS under license with ISO
No reproduction or networking permitted without license from IHS Not for Resale

A) **Incident Qualifier (IQ):** Word 8 bits 31 to 24 (byte 0 of the Common Link Incident Descriptor) qualify the manner in which the contents of the Link Incident Record shall be interpreted. The meaning is defined in table 145.

**Table 145 - Incident Qualifier**

<table>
<tr><th>Bits</th><th colspan="2">Meaning</th></tr>
<tr><td>31</td><td colspan="2">Reserved.</td></tr>
<tr><td>30</td><td colspan="2">Reserved.</td></tr>
<tr><td>29</td><td colspan="2">Switch:<br>When set to one, indicates that the incident port is a port on a switch node. When set to zero, indicates that the incident port is not a port on a switch node.</td></tr>
<tr><td>28</td><td colspan="2">Expansion Port:<br>When set to one, indicates that the switch port is an Inter-Switch-Link Expansion port (E_Port). When zero, bit 28 indicates that the switch port is not an Inter-Switch-Link Expansion port.</td></tr>
<tr><td rowspan="5">27 to 26</td><td colspan="2">Severity Indication:<br>Bits 27 to 26 constitute a two-bit code that identifies the severity indication for the link incident. The codes and their meanings are as follows:</td></tr>
<tr><td>Code</td><td>Meaning</td></tr>
<tr><td>0</td><td>Informational report:<br>Link incidents use reporting-status order 0 to provide information only.</td></tr>
<tr><td>1</td><td>Link degraded but operational:<br>Link incidents use reporting-status order 1 if the link associated with the incident port is not in a Link-Failure or Offline State as a result of the event that generated the Link Incident Record.</td></tr>
<tr><td>2</td><td>Link not operational:<br>Link incidents use reporting-status order 2 if the link associated with the incident port is in a Link-Failure or Offline State as a result of the event that generated the Link Incident Record.</td></tr>
<tr><td>3</td><td>Reserved.</td></tr>
<tr><td>25</td><td colspan="2">Subassembly type:<br>When set to one, specifies that the type of subassembly used for the port that is the subject of this Link Incident Record is a laser. When set to zero, specifies that the type of subassembly used for the port that is the subject of this Link Incident Record is not a laser.</td></tr>
<tr><td>24</td><td colspan="2">FRU identification:<br>When set to one, specifies that the Specific-Link Incident Record Data is in a format that provides field-replaceable-unit (FRU) identification. When set to one, specifies that the Specific-Link Incident Record Data is not in a format that provides field-replaceable-unit (FRU) identification.</td></tr>
</table>

**B) Incident Code (IC):** Word 8 bits 23 to 16 (byte 1 of the Common Link Incident Descriptor) contains the incident code that describes the incident that was observed by the incident node.
a)Bit 23 is reserved.
b)Bits 22 to 16 is the value that specifies the type of incident that was observed. The values that shall be specified and their meanings are shown in table 146.

Copyright International Organization for Standardization
Provided by IHS under license with ISO
No reproduction or networking permitted without license from IHS Not for Resale

After a Link Failure is detected, the reporting node may delay recognizing and considering this link failure as a reportable link incident condition, for a specific period of time. Some FC-4 protocols may be capable of transparently recovering from a Link Failure condition, and may not generate a Link Incident Record. If the Link Failure condition persists for longer than the FC-4 specified time out period, then a Link Incident Record is generated and reported.

.

**Table 146 - Incident Code values**

| Value | Meaning |
|---|---|
| hex ’00’ | Reserved. |
| hex ’01’ | **Implicit incident:**<br>A condition, caused by an event known to have occurred within the incident port, has been recognized by the incident port. The condition affects the attached link in such a way that it may cause a link incident to be recognized by the connected port. |
| hex ’02’ | **Bit-error-rate threshold exceeded:**<br>The number of code-violation errors recognized by the incident port has exceeded a threshold (see 21.2.7). |
| hex ’03’ | **Link Failure - Loss-of-Signal or synchronization:**<br>The incident port has recognized a Loss-of-Synchronization condition, and it persisted for more than the R_T_TOV timeout period. The incident port has recognized a Loss-of-Signal condition (see 6.1.5.2). |
| hex ’04’ | **Link Failure - Not-Operational Primitive Sequence (NOS) recognized:**<br>The Not_Operational Primitive Sequence has been recognized by the incident port (see 5.5.4.2) |
| hex ’05’ | **Link Failure - Primitive Sequence timeout:**<br>The incident port has recognized either a Link-Reset-Protocol timeout (see 7.6.3), or a timeout when timing for the appropriate response while in the LF1 State and after NOS is no longer recognized (see 7.4.2). |
| hex ’06 | **Link Failure - Invalid Primitive Sequence for port state:**<br>The incident port recognized either a LR or LRR Primitive Sequence while in the OL3 State (see 7.5.4). |
| hex ’07’ | **Link Failure - Loop Initialization time out:**<br>The incident port failed to complete loop initialization within the normal loop time out period (See [2], FC-AL-2). |
| hex ’08’ | **Link Failure – receiving LIP(F8):**<br>The incident port is receiving LIP(F8) indicating some other port on the loop is experiencing a Loss-of-Signal condition. |
| hex ’09’ to hex ’FE’ | **Reserved.** |

C) **Expansion Port address identifier (EPAI):** When word m+1 (see table 141) bits 29 and 28 (IQ field) of the Payload are both ones, indicating that the incident port is an Inter-Switch-Link Expansion port (word 0 bits 15 to 0 of the Common Link Incident Descriptor) contain the Domain and Area address identifiers (hex 'DD AA') of the connected Expansion port on this Inter-Switch-Link.

g) **Specific Link Incident Record Data:** The format of the Specific Link Incident Record-Data Field shall be dependent on the Link Incident Record Format. Specific Link Incident Record Data is subject to the client's

Copyright International Organization for Standardization
Provided by IHS under license with ISO
No reproduction or networking permitted without license from IHS Not for Resale

requirements and intended usage. The Specific Link Record Data may include summaries of RNID node information and other parameters, for example:

A) I**ncident port control descriptors**: Contains flag, qualifier, and control parameters pertaining to the incident record. The contents of Incident-Control Descriptors are described in the appropriate ULP standard or technical report.
B) **Incident port's node descriptor:** Contains the node Identification Data of the incident node. The contents of node Identification Data are described in the appropriate ULP standard or technical report.
C) **Connected port's node descriptor:** Contains the node identification data of the connected port's node. The contents of node identification data are described in the appropriate ULP standard or technical report.
D) **Incident specific information:** When word 8 bit 24 (IQ field) of the Payload indicates that the Specific Link Incident Record Data is in a format that provides field replaceable unit (FRU) identification, then the incident specific information contains the FRU identification. When word 0 bit 24 indicates that the Specific Link Incident Record Data is not in a format that provides field replaceable unit identification, then the incident specific information contains vendor specific incident information.

#### 12.3.2.31.5 Reply Sequence

**LS_RJT:** LS_RJT signifies the rejection of the RLIR Request

**LS_ACC:** LS_ACC signifies acceptance of the RLIR Request and its Link Incident Record. The format of the LS_ACC Payload is shown in table 147.

**Table 147 - RLIR LS_ACC Payload**

| Bits / Word | 31 .. 24 | 23 .. 16 | 15 .. 08 | 07 .. 00 |
|---|---|---|---|---|
| **0** | hex '02' | hex '00' | hex '00' | hex '00' |

### 12.3.2.32 Link Incident Record Registration (LIRR)

#### 12.3.2.32.1 Description

See 12.3.2.30.1 for the definition of ports, nodes, and records related to link incident reporting.

The LIRR ELS shall request the recipient to add or remove this source Nx_Port to or from the list of Nx_Port's registered to receive the Registered Link Incident Report (RLIR) ELS. The normal response to a LIRR ELS Sequence shall be a LS_ACC ELS Sequence with no Payload. If the recipient Nx_Port does not support the LIRR ELS, it shall reply with a LS_RJT ELS Sequence with a reason code of "Command not supported". If the recipient Nx_Port is unable to perform the requested LIRR registration function or the specified format is not supported, it shall reply with a LS_RJT ELS Sequence with a reason code of "Unable to perform command request".

When an Nx_Port is registering or de-registering with the Fabric for receipt of Link Incident Records from the Fabric, the LIRR ELS shall be sent to the Management Server (hex 'FF FF FA').

#### 12.3.2.32.2 Registration for Link Incident Records

To obtain and process Link Incident Records, a ULP shall register it's port with other ports of interest. The term 'ports of interest' refers to all ports that the registered port may address and for which the port requires their Link Incident Records.

An Nx_Port shall attempt to register as a valid recipient of subsequent Link Incident Records by sending a LIRR ELS as soon as the requesting Nx_Port has determined its address identifier and has determined the address identifiers for the ports of interest. The ULP shall indicate the format of Link Incident Records of interest that are being registered. The recipient Nx_Port shall respond with a LS_ACC ELS with no Payload.

Copyright International Organization for Standardization
Provided by IHS under license with ISO
No reproduction or networking permitted without license from IHS Not for Resale

When a registered ULP is no longer interested in receiving Link Incident Records from any port or ports of interest, it shall send a LIRR ELS to de-register their port as a valid recipient of Link Incident Records. The ULP shall indicate the format of Link Incident Records that are being de-registered.

If a LIRR ELS requesting a de-registration function for a port that is not registered is received, the recipient port accepts the request by sending a LS_ACC ELS and performs no further action. If a LIRR ELS requesting a registration for a port that is already registered for the specified format, the recipient port shall accept by sending a LS_ACC ELS request and perform no further action.

The recipient of a LIRR ELS shall maintain a separate established registration list of valid Link Incident Record recipients for each registration format specified. The size of the established registration list maintained by each port for each specified format is vendor specific. If the established registration list is full when an add registration function occurs, the port does not accept this registration, and rejects this request indicating “unable to perform command request”.

A Logout occurring between a node and a valid-registered-recipient node shall cause de-registration of the valid-recipient port in the established registration list maintained by the port.

#### 12.3.2.32.3 Responsibilities of Valid-Registered Recipients

A valid-registered recipient shall be capable of receiving and processing Link Incident Records that are generated according to the Link Incident reporting procedure (see 12.3.2.31.2). The usage and coordination of Link Incident Records by ULPs is beyond the scope of this standard.

If a valid registered recipient receives a Link Incident Record for a format that does not match its registration format, the recipient port shall reject the RLIR ELS with a reason code of “Unable to perform command request”.

#### 12.3.2.32.4 Protocol

a) LIRR Request Sequence
b) LS_ACC or LS_RJT Reply Sequence

#### 12.3.2.32.5 Request Sequence

**Format:** FT_1

**Addressing:** The S_ID designates the source port requesting registration for Link Incident Records. The D_ID field designates the port receiving the registration request.

**Payload:** The format of the LIRR Payload is shown in table 148.

**Table 148 - LIRR Payload**

| Bits / Word | 31 .. 24 | 23 .. 16 | 15 .. 08 | 07 .. 00 |
|---|---|---|---|---|
| **0** | LIRR (hex ’7A’) | hex '00' | hex '00' | hex '00' |
| **1** | Registration Function | Link Incident Record-Registration Format | Reserved | |

THe LIRR Payload field shall be defined as follows:

a) **Registration Function:** The Registration function shall specify the mode of registration (i.e., whether the recipient node adds or removes the sending Nx_Port to or from its list of registered nodes, hereafter

Copyright International Organization for Standardization
Provided by IHS under license with ISO
No reproduction or networking permitted without license from IHS Not for Resale

referred to as the established registration list). The format of the Registration Function field is shown in table 149.

**Table 149 - Registration Function**

| value | Function |
|---|---|
| hex ’00 | Reserved |
| hex ’01’ | **Set registration – conditionally receive:** The source port is registered as a valid recipient of subsequent RLIR ELSs for the format specified. The port is added to the appropriate format specific established registration list. This source port is chosen as the recipient of a link incident record only if no other recipients from this established registration list have been chosen. |
| hex ’02’ | **Set registration – always receive:** The source port is registered as a valid recipient of subsequent RLIR ELSs for the format specified. The port is added to the appropriate format specific established registration list. This source port is always chosen as a recipient of a link incident record. |
| hex ’03’ to hex ’FE’ | **Reserved** |
| hex ’FF’ | **Clear registration:** The source port is de-registered as a valid recipient of subsequent RLIR ELSs for the format specified (i.e., remove from the established registration list). |

b) **Link Incident Record-Registration Type:** The type of the requested Link Incident Record Registration is shown in table 150.

**Table 150 - Link Incident Record-Registration Format**

| Value | Description |
|---|---|
| hex '00' | Common Format |
| hex '01' to hex 'FF' | Specific-coded value |

A Link Incident Record Registration Format of hex ’00’ specifies that only the Common Link Incident Record and the Link Incident Descriptor is reported. If the Link Incident Record Registration format is non-zero, it shall be set to the Specific-coded value (FC-4 Device Type) of the registration format being requested for a specific client ULP (e.g., see [9], FCP-3). The Specific-coded value uses the TYPE codes defined in FC-4 data structures of this standard. These codes allow clients to define and register for Link Incident Record formats for their own particular usage according to the unique FC-4 protocol.

**12.3.2.32.6 Reply Sequence**

**LS_RJT:** LS_RJT signifies the rejection of the LIRR Request

**LS_ACC:** LS_ACC Signifies acceptance of the LIRR Request and the registration for RLIR ELSs. The format of the LS_ACC Payload is shown in table 151.

**Table 151 - LIRR LS_ACC Payload**

| Bits / Word | 31 .. 24 | 23 .. 16 | 15 .. 08 | 07 .. 00 |
|---|---|---|---|---|
| **0** | hex ’02’ | hex '00' | hex '00' | hex '00' |

--`,,```,,,,````-`-`,,`,,`,`,,`---

Copyright International Organization for Standardization
Provided by IHS under license with ISO
No reproduction or networking permitted without license from IHS Not for Resale

#### 12.3.2.33 Get Alias_ID (GAID)

##### 12.3.2.33.1 Description

The GAID ELS shall be sent to the Fabric Controller by the Alias Server (see clause 24) to request a unique Alias_ID to be associated with the Alias Group indicated in the passed Alias_Token.

##### 12.3.2.33.2 Protocol

a) GAID Request Sequence
b) LS_ACC or LS_RJT Reply Sequence

##### 12.3.2.33.3 Request Sequence

**Format:** FT_1

**Addressing:** The S_ID designates the Alias Server (hex 'FF FF F8'). The D_ID field designates the Fabric Controller (hex 'FF FF FD').

**Payload:** The format of the Payload is shown in table 152.

**Table 152 - Get Alias_ID Payload**

<table>
<tr><th>Bits<br>Word</th><th>31 .. 24</th><th>23 .. 16</th><th>15 .. 08</th><th>07 .. 00</th></tr>
<tr><td>0</td><td>Get Alias_ID<br>(hex '30')</td><td>hex '00'</td><td>hex '00'</td><td>hex '00'</td></tr>
<tr><td>1</td><td>MSB</td><td colspan="2" rowspan="3">Alias_Token<br>(12 bytes)</td><td></td></tr>
<tr><td>2</td><td></td><td></td></tr>
<tr><td>3</td><td></td><td>LSB</td></tr>
<tr><td>4</td><td></td><td colspan="2" rowspan="4">Alias_SP<br>(80 bytes)</td><td></td></tr>
<tr><td>..</td><td></td><td></td></tr>
<tr><td>23</td><td></td><td></td></tr>
<tr><td>24</td><td colspan="4">NP_List_Length<br>(Number of NP_List entries = n)</td></tr>
<tr><td>25</td><td colspan="4">NP_List (1)</td></tr>
<tr><td>..</td><td colspan="4">..</td></tr>
<tr><td>24 + n</td><td colspan="4">NP_List (n)</td></tr>
</table>

a) **Alias Group Token (Alias_Token):** This is the token identifying the Alias Group. See [6], FC-GS-4 for a description of the Alias_Token.
b) **Alias Group Service Parameters (Alias_SP):** The Alias_SP defines the Service Parameters to be used for all operations with this Alias Group. The Service Parameters are passed as defined by the Common Service Parameters and the appropriate Class Service Parameters (see 15.6).

NOTE 1 This field is used by the Fabric Controller to ensure that the Service Parameters to be used by the Alias Group are not in conflict with the Fabric Service Parameters.

c) **Nx_Port List Length (NP_List_Length):** The NP_List_Length specifies the number of entries in the following NP_List.

Copyright International Organization for Standardization
Provided by IHS under license with ISO
No reproduction or networking permitted without license from IHS Not for Resale

d) **Nx_Port List (NP_List):** The NP_List contains one entry for each N_Port_ID to be included in the Alias Group. The N_Port_ID shall be right aligned within the NP_List entry (i.e., the high-order byte of the entry shall be ignored and the low-order 3 bytes shall contain the N_Port_ID. The N_Port_ID shall not be an Alias_ID).

NOTE 2 The Fabric Controller uses the NP_List to determine whether it supports an Alias Group composed of these Nx_Ports (e.g., if the Fabric does not support an Alias Group that spans Domains, and the NP_List contains Nx_Ports in multiple Domains, the request may be rejected). Alternatively, the Fabric may form an Alias Group from the Nx_Ports within a single Domain.

#### 12.3.2.33.4 Reply Sequence

**LS_RJT:** LS_RJT signifies the rejection of the GAID Request. An LS_RJT shall be returned if an Alias_ID is not generated. A reason code of “Unable to perform command request” shall be generated, along with one of the reason code explanations given in table 206.

**LS_ACC:** The format of the Payload for the LS_ACC indicating that this request has been successfully completed is shown in table 153.

**Table 153 - Get Alias_ID LS_ACC Payload**

| Bits / Word | 31 .. 24 | 23 .. 16 | 15 .. 08 | 07 .. 00 |
|---|---|---|---|---|
| **0** | hex ’02’ | hex '00' | hex '00' | hex '00' |
| **1** | Alias_ID | | | |

The Alias Group Identifier field contains the Alias_ID that the Nx_Port shall recognize, in addition to its native address identifier.

### 12.3.2.34 Fabric Activate Alias_ID (FACT)

#### 12.3.2.34.1 Description

The FACT ELS shall be sent to the Fabric Controller by the Alias Server (see clause 24) to cause it to assign the passed Alias_ID as an Alias_ID for the passed Nx_Ports.

#### 12.3.2.34.2 Protocol

a) FACT Request Sequence
b) LS_ACC or LS_RJT Reply Sequence

#### 12.3.2.34.3 Request Sequence

**Format:** FT_1

**Addressing:** The S_ID designates the Alias Server (hex ’FF FF F8’). The D_ID field designates the Fabric Controller (hex ’FF FF FD’).

**Payload:** The Payload of the request contains, among other parameters a list of the Nx_Ports for which the Alias_ID is to be recognized and the Alias_ID to be recognized as an Alias_ID. The format of the Payload is shown in table 154.

Copyright International Organization for Standardization
Provided by IHS under license with ISO
No reproduction or networking permitted without license from IHS Not for Resale

**Table 154 - Fabric Activate Alias_ID Payload**

| Bits / Word | 31 .. 24 | 23 .. 16 | 15 .. 08 | 07 .. 00 |
|---|---|---|---|---|
| **0** | FACT (hex ’31’) | hex '00' | hex '00' | hex '00' |
| **1** | Alias_ID | | | |
| **2** | NP_List_Length<br>(Number of NP_List entries = n) | | | |
| **3** | NP_List (1) | | | |
| **..** | .. | | | |
| **2 + n** | NP_List (n) | | | |

a) **Alias Group Identifier (Alias_ID):** This is the Alias_ID that the Fabric shall recognize for the Nx_Ports in the list, in addition to their native address identifiers.
b) **Nx_Port List Length (NP_List_Length):** The NP_List_Length specifies the number of entries in the following NP_List.
c) **Nx_Port List (NP_List):** The NP_List contains one entry for each Nx_Port for which the Alias_ID is to be assigned as an Alias_ID. The N_Port_ID shall be right aligned within the NP_List entry (i.e., the high-order byte of the entry shall be ignored and the low-order 3 bytes shall contain the N_Port_ID).

#### 12.3.2.34.4 Reply Sequence

**LS_RJT:** LS_RJT signifies the rejection of the FACT Request. An LS_RJT shall be returned if an Alias_ID is not activated as an Alias_ID. A reason code of “Unable to perform command request”.

**LS_ACC:** The format of the Payload for the LS_ACC indicating that this request has been successfully completed is shown in table 155.

**Table 155 - Fabric Activate Alias_ID LS_ACC Payload**

| Bits / Word | 31 .. 24 | 23 .. 16 | 15 .. 08 | 07 .. 00 |
|---|---|---|---|---|
| **0** | hex ’02’ | hex '00' | hex '00' | hex '00' |

### 12.3.2.35 Fabric Deactivate Alias_ID (FDACT)

#### 12.3.2.35.1 Description

The FDACT ELS shall be sent to the Fabric Controller by the Alias Server (see 24.2) to request that it deassign the indicated Alias_ID as an Alias Group identifier for the passed Nx_Ports. When there are no longer any Nx_Ports for which the Alias_ID is active, the Fabric Controller shall free up the Alias_ID for subsequent reassignment.

#### 12.3.2.35.2 Protocol

a) FDACT Request Sequence
b) LS_ACC or LS_RJT Reply Sequence

#### 12.3.2.35.3 Request Sequence

**Format:** FT_1

**Addressing:** The S_ID designates the Alias Server (hex ’FF FF F8’). The D_ID field designates the Fabric

Copyright International Organization for Standardization
Provided by IHS under license with ISO
No reproduction or networking permitted without license from IHS Not for Resale

Controller (hex ’FF FF FD’).

**Payload:** The Payload of the request contains, among other parameters, the Alias_ID to be deactivated, and the list of Nx_Ports for which this Alias_ID is to be deactivated. The format of the Payload is shown in table 156.

**Table 156 - Fabric Deactivate Alias_ID Payload**

| Bits / Word | 31 .. 24 | 23 .. 16 | 15 .. 08 | 07 .. 00 |
|---|---|---|---|---|
| **0** | FACT (hex ’32’) | hex '00' | hex '00' | hex '00' |
| **1** | Alias_ID | | | |
| **2** | NP_List_Length<br>(Number of NP_List entries = n) | | | |
| **3** | NP_List (1) | | | |
| **..** | .. | | | |
| **2 + n** | NP_List (n) | | | |

a) **Alias Group ID (Alias_ID):** This is the Alias_ID to be deactivated.
b) **Nx_Port List Length (NP_List_Length):** The NP_List_Length specifies the number of entries in the following NP_List.
c) **Nx_Port List (NP_List):** The NP_List contains one entry for each Nx_Port for which the Alias_ID is to be deactivated as an Alias_ID. The N_Port_ID shall be right aligned within the NP_List entry (i.e., the high-order byte of the entry shall be ignored and the low-order 3 bytes shall contain the N_Port_ID).

#### 12.3.2.35.4 Reply Sequence

**LS_RJT:** LS_RJT signifies the rejection of the FDACT Request. An LS_RJT shall be returned if the Alias_ID is not deactivated as an Alias_ID. A reason code of “Unable to perform command request”.

**LS_ACC:** The format of the Payload for the LS_ACC indicating that this request has been successfully completed is shown in table 157.

**Table 157 - Fabric Deactivate Alias_ID LS_ACC Payload**

| Bits / Word | 31 .. 24 | 23 .. 16 | 15 .. 08 | 07 .. 00 |
|---|---|---|---|---|
| **0** | hex ’02’ | hex '00' | hex '00' | hex '00' |

### 12.3.2.36 N_Port Activate Alias_ID (NACT)

#### 12.3.2.36.1 Description

The NACT ELS shall be sent to an Nx_Port by Alias Server (see 24.2) to cause it to assign the passed Alias_ID as an Alias_ID.

#### 12.3.2.36.2 Protocol

a) NACT Request Sequence
b) LS_ACC or LS_RJT

Copyright International Organization for Standardization
Provided by IHS under license with ISO
No reproduction or networking permitted without license from IHS Not for Resale

#### 12.3.2.36.3 Reply Sequence

**Format:** FT_1

**Addressing:** The S_ID designates the Alias Server (hex 'FF FF F8'). The D_ID field designates the Nx_Port receiving the NACT.

**Payload:** The Payload of the request contains, among other parameters, the Alias_Token of the Alias Group that the Nx_Port is joining, the Service Parameters associated with that Alias Group, and the Alias_ID to be assigned to the Nx_Port. The format of the Payload is shown in table 158.

**Table 158 - N_Port Activate Alias_ID Payload**

| Bits / Word | 31 .. 24 | 23 .. 16 | 15 .. 08 | 07 .. 00 |
|---|---|---|---|---|
| 0 | FACT (hex '33') | hex '00' | hex '00' | hex '00' |
| 1 | MSB | Alias_Token (12 bytes) | | |
| 2 | | | | |
| 3 | | | | LSB |
| 4 | Alias_ID | | | |
| 5 | | Alias_SP (80 bytes) | | |
| .. | | | | |
| 24 | | | | |

a) **Alias Group Token (Alias_Token):** This is the token identifying the Alias Group. It contains the Alias_Class and Alias_Qualifier of the Alias Group the Nx_Port is being requested to join. The Nx_Port validates that it supports that particular Alias Class. See [6], FC-GS-4 for a description of the Alias_Token.
b) **Alias Group Identifier (Alias_ID):** The Alias Group Identifier field contains the Alias_ID that the Nx_Port shall recognize, in addition to its native address identifier.
c) **Alias Group Service Parameters (Alias_SP):** The Alias_SP defines the Service Parameters to be used for all operations with this Alias Group (see 15.6).

NOTE These Service Parameters may differ from those passed during Login.

For Multicast Groups, only the Common Service Parameters and Class 3 Service Parameters are used. For Hunt Groups, all Service Parameters may be used.

The Nx_Port shall transmit a LS_ACC to notify the Alias Server if the Nx_Port:

a) Supports the Alias_Class in the Alias_Token.
b) Supports the Alias Group Service Parameters specified in Alias_SP.
c) Has assigned the passed Alias_ID as an Alias_ID for this Nx_Port.

#### 12.3.2.36.4 Reply Sequence

**LS_RJT:** LS_RJT signifies the rejection of the NACT Request. An LS_RJT shall be returned if the Alias_ID is unable to be activated as an Alias_ID. A reason code of "Unable to perform command request" shall be generated, along with one of the reason code explanations given in table 206.

**LS_ACC:** The format of the Payload for the LS_ACC indicating that this request has been successfully completed is shown in table 159. If the Nx_Port is unable to perform all of the above functions, it shall send an LS_RJT as a

--`,,```,,,,````-`-`,,`,,`,`,,`---

Copyright International Organization for Standardization
Provided by IHS under license with ISO
No reproduction or networking permitted without license from IHS Not for Resale

reply.

**Table 159 - N_Port Activate Alias_ID LS_ACC Payload**

| Bits / Word | 31 .. 24 | 23 .. 16 | 15 .. 08 | 07 .. 00 |
|---|---|---|---|---|
| **0** | hex ’02’ | hex '00' | hex '00' | hex '00' |

**12.3.2.37 N_Port Deactivate Alias_ID (NDACT)**

**12.3.2.37.1 Description**

The NDACT ELS shall be sent to an Nx_Port by Alias Server (see 24.2) to cause it to deactivate the passed Alias_ID as an Alias_ID.

**12.3.2.37.2 Protocol**

a) NDACT Request Sequence
b) LS_ACC or LS_RJT Reply Sequence

**12.3.2.37.3 Request Sequence**

**Format:** FT_1

**Addressing:** The S_ID designates the Alias Server (hex ’FF FF F8’). The D_ID field designates the Nx_Port receiving the NDACT.

**Payload:** The Payload of the request contains, among other parameters, the Alias_ID to be deactivated by the Nx_Port. The format of the Payload is shown in table 160.The Nx_Port shall transmit a LS_ACC to notify the Alias Server of a deactivation of an Alias_ID.

**Table 160 - N_Port Deactivate Alias_ID Payload**

| Bits / Word | 31 .. 24 | 23 .. 16 | 15 .. 08 | 07 .. 00 |
|---|---|---|---|---|
| **0** | FACT (hex ’34’) | hex '00' | hex '00' | hex '00' |
| **1** | Alias_ID | | | |

**Alias Group Identifier (Alias_ID):** The Alias Group Identifier field shall contain the Alias_ID that the Nx_Port no longer recognizes.

**12.3.2.37.4 Reply Sequence**

**LS_RJT:** LS_RJT signifies the rejection of the NDACT Request. An LS_RJT shall be returned if the Alias_ID is unable to be deactivated as an Alias_ID. A reason code of “Unable to perform command request” shall be generated, along with one of the reason code explanations in table 206.

**LS_ACC:** The format of the Payload for the LS_ACC indicating that this request has been successfully completed is shown in table 161. If the Nx_Port is unable to perform all of the above functions, it shall send an LS_RJT as a

Copyright International Organization for Standardization
Provided by IHS under license with ISO
No reproduction or networking permitted without license from IHS Not for Resale

reply.

**Table 161 - N_Port Deactivate Alias_ID LS_ACC Payload**

| Bits / Word | 31 .. 24 | 23 .. 16 | 15 .. 08 | 07 .. 00 |
|---|---|---|---|---|
| **0** | hex ’02’ | hex '00' | hex '00' | hex '00' |

### 12.3.2.38 Quality of Service Request (QoSR)

#### 12.3.2.38.1 Description

The QoSR ELS shall request setup of a Class 4 circuit and that the requested level of service be granted by the Quality of Service Facilitator (QoSF) for this Class 4 circuit. The N_Port requesting a Class 4 circuit is the circuit initiator (CTI), the Recipient N_Port is the circuit recipient (CTR).

A QoSR transaction is first sent from the CTI to the QOSF to request setup of a Class 4 circuit. A QoSR transaction shall be sent from the QoSF to the CTR to obtain acceptance from the CTR to setup a Class 4 circuit (see 25.3.5.2).

The CTR shall grant the setup of the Class 4 circuit to the QOSF using an LS_ACC before the Class 4 circuit setup is granted by the QOSF to the CTI using an LS_ACC (see figure 15).

#### 12.3.2.38.2 Protocol

a) QoSR Request Sequence
b) LS_ACC or LS_RJT Reply Sequence

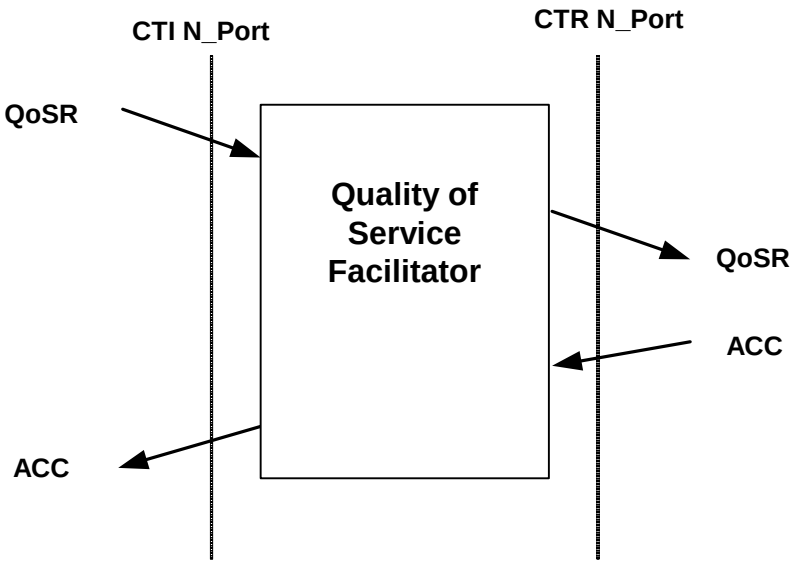


**Figure 15 - QoSR Sequence flow**

#### 12.3.2.38.3 Request Sequence

**Addressing:** When transmitted by a CTI, the S_ID field designates the source N_Port requesting the Class 4 circuit. The D_ID field designates the QoSF (hex ’FF FF F9').

When transmitted by the QoSF, the S_ID field designates the QoSF. The D_ID field designates the CTR Address

--`,,```,,,,````-`-`,,`,,`,`,,`---

Copyright International Organization for Standardization
Provided by IHS under license with ISO
No reproduction or networking permitted without license from IHS Not for Resale

Identifier.

**Payload:** The format of the Payload is shown in table 162.

**Table 162 - QoSR Payload**

| Bits / Word | 31 .. 24 | 23 .. 16 | 15 .. 08 | 07 .. 00 |
|---|---|---|---|---|
| **0** | QoSR (hex ’40’) | hex '00' | hex '00' | hex '00' |
| **1** | Reserved | | | |
| **2** | CTI VC_ID | CTI address identifier | | |
| **3** | CTI Maximum Bandwidth (Bytes/s) | | | |
| **4** | CTI Minimum Bandwidth (Bytes/s) | | | |
| **5** | CTI Maximum Delay ( µs) | | | |
| **6** | CTI VC Data Field Size | | | |
| **7** | Reserved | | | |
| **8** | Reserved | | | |
| **9** | Reserved | | | |
| **10** | CTR VC_ID | CTR address identifier | | |
| **11** | CTR Maximum Bandwidth (Bytes/s) | | | |
| **12** | CTR Minimum Bandwidth (Bytes/s) | | | |
| **13** | CTR Maximum Delay (µs) | | | |
| **14** | CTR VC Data Field Size | | | |
| **15** | Reserved | | | |
| **16** | Reserved | | | |
| **17** | Reserved | | | |
| **18** | Reserved | Live VC credit limit | Class 4 end-to-end credit | |

**CTI VC_ID:** The CIVC_ID for the CTI. The CTI shall choose a currently unassigned VC_ID value in the range of hex '01' through hex 'FE'. This same value shall be in the request from the QoSF to the CTR.

**CTI address identifier:** The CTI address identifier may be different from the S_ID in the QoSR from the CTI. However, the CTI address identifier shall be a valid, native or Alias_ID for the CTI. The CTI address identifier shall be the address identifier used as the S_ID in all Class 4 frames sent by the CTI or the D_ID on all Class 4 frames sent by the CTR for the Class 4-circuit setup by the LS_ACC for this QoSR. This same value shall be in the request from the QoSF to the CTR.

**CTI Maximum Bandwidth (Bytes/s):** The maximum bandwidth in bytes per second (Bytes/s), from the CTI to the CTR, the CTI requires for this VC. This same value shall be in the request from the QoSF to the CTR. The Fabric may enforce the CTI Maximum Bandwidth limit. An N_Port may use end-to-end flow control to further limit the available bandwidth. The CTI Maximum Bandwidth field value divided by the CTI VC Data Field Size provides the maximum number of VC_RDYs that the QOSF shall send to the CTI per second.

**CTI Minimum Bandwidth (Bytes/s):** The minimum bandwidth in bytes per second (Bytes/s) is the minimum acceptable rate that the Fabric shall be capable of supporting from the CTI to the CTR. This same value shall be in the request from the QoSF to the CTR. The CTI Minimum Bandwidth field value divided by the CTI VC Data Field Size provides the minimum number of VC_RDYs that the QOSF shall send to the CTI per second.

**CTI Maximum Delay (µs):** The maximum acceptable delay in µs from the CTI to the CTR. This same value shall

Copyright International Organization for Standardization
Provided by IHS under license with ISO
No reproduction or networking permitted without license from IHS Not for Resale

be in the request from the QoSF to the CTR. The CTI maximum delay value shall satisfy the following relationship:

E_D_TOV > 2 (CIMD + CRMD)

where

a) CIMD CTI maximum delay
b) CRMD CTR maximum delay

**CTI VC Data Field Size:** The maximum acceptable frame size in bytes from the CTI to the CTR. This value shall not exceed the minimum value resulting from Fabric Login and N_Port Login with the CTR. This value shall not be less than 256 and shall be a multiple 4. This same value shall be in the request from the QoSF to the CTR.

**CTR VC_ID:** The field is only meaningful in the LS_ACC for a QOSR transaction. When sent in a QOSR request from the CTI, this field shall be zero. This same value shall be in the QOSR request from the QoSF to the CTR.

**CTR address identifier:** The address identifier of the CTR for this Class 4 circuit. The CTR address identifier may be different from the D_ID in the QoSR from the CTI. However, the CTR address identifier shall be a valid, native or Alias_ID for the CTR. The CTR address identifier shall be the address identifier used as the D_ID in all Class 4 frames sent by the CTI or the S_ID on all Class 4 frames sent by the CTR for the Class 4-circuit setup by the LS_ACC for this QoSR. This same value shall be in the request from the QoSF to the CTR.

**CTR Maximum Bandwidth (Bytes/s):** The maximum bandwidth in bytes per second, from the CTR to the CTI. This same value shall be in the request from the QoSF to the CTR. The Fabric may enforce the CTR Maximum Bandwidth limit. An N_Port may use end-to-end flow control to further limit the available bandwidth. The CTR Maximum Bandwidth field value divided by the CTR VC Data Field Size provides the maximum number of VC_RDYs that the QOSF shall send to the CTR per second.

**CTR Minimum Bandwidth (Bytes/s):** The minimum bandwidth in bytes per second (Bytes/s) is the minimum acceptable rate that the Fabric shall be capable of supporting from the CTR to the CTI. This same value shall be in the request from the QoSF to the CTR. The CTR Minimum Bandwidth field value divided by the CTR VC Data Field Size provides the minimum number of VC_RDYs that the QOSF shall send to the CTR per second.

**CTR Maximum Delay (µs):** The maximum acceptable delay in microseconds from the CTR to the CTI. This same value shall be in the request from the QoSF to the CTR. The CTR maximum delay value shall satisfy the following relationship:

E_D_TOV > 2 (CIMD + CRMD)

where

a) CIMD CTI maximum delay
b) CRMD CTR maximum delay

**CTR VC Data Field Size:** The maximum acceptable frame size in bytes from the CTR to the CTI. This value shall not exceed the minimum value resulting from Fabric Login and N_Port Login with the CTR. This value shall not be less than 256 and shall be a multiple 4. This same value shall be in the request from the QoSF to the CTR.

**Live VC credit limit:** The VC credit limit for the VC in the Live State shall be set by the Fabric in the QoSR from the QoSF to the CTR. This field is not meaningful to the CTI and shall be set to zero.

**Class 4 end-to-end Credit:** For the CTR, this shall be set by the CTI and represents the maximum Class 4 end-to-end Credit limit as well as the Class 4 end-to-end Credit for a dormant Class 4 circuit. This same value shall be in the request from the QoSF to the CTR.

#### 12.3.2.38.4 Reply Sequence

**LS_RJT:** LS_RJT signifies rejection of the QoSR command

Copyright International Organization for Standardization
Provided by IHS under license with ISO
No reproduction or networking permitted without license from IHS Not for Resale

**LS_ACC:**

a) From the CTR to the QoSF - signifies that the CTR has accepted the QoS parameters.
b) From the QoSF - signifies that the Fabric has accepted the QoS parameters and has setup the Class 4 circuit. The QoSF shall await the LS_ACC from the CTR before it transmits the LS_ACC to the CTI.

The format of the LS_ACC Payload is shown in table 163.

**Table 163 - QoSR LS_ACC Payload**

| Bits<br>Word | 31 .. 24 | 23 .. 16 | 15 .. 08 | 07 .. 00 |
|---|---|---|---|---|
| **0** | hex ’02’ | hex '00' | hex '00' | hex '00' |
| **1** | Reserved | | | |
| **2** | CTI VC_ID | CTI address identifier | | |
| **3** | CTI Maximum Bandwidth (B/s) | | | |
| **4** | CTI Minimum Bandwidth (B/s) | | | |
| **5** | CTI Maximum Delay (µs) | | | |
| **6** | CTI VC Data Field Size | | | |
| **7** | Reserved | | | |
| **8** | Reserved | | | |
| **9** | Reserved | | | |
| **10** | CTR VC_ID | CTR address identifier | | |
| **11** | CTR Maximum Bandwidth (Bytes/s) | | | |
| **12** | CTR Minimum Bandwidth (Bytes/s) | | | |
| **13** | CTR Maximum Delay (µs) | | | |
| **14** | CTR VC Data Field Size | | | |
| **15** | Reserved | | | |
| **16** | Reserved | | | |
| **17** | Reserved | | | |
| **18** | Reserved | Live VC credit limit | Class 4 end-to-end credit | |

**CTI VC_ID:** The value from the request shall be in the LS_ACC from the CTR to the QoSF and in the LS_ACC from the QoSF to the CTI.

**CTI address identifier:** The value from the request shall be in the LS_ACC from the CTR to the QoSF and in the LS_ACC from the QoSF to the CTI.

**CTI Maximum Bandwidth (Bytes/sec):** The value from the request shall be in the LS_ACC from the CTR to the QoSF and in the LS_ACC from the QoSF to the CTI.

**CTI Minimum Bandwidth (Bytes/sec):** The value from the request shall be in the LS_ACC from the CTR to the QoSF and in the LS_ACC from the QoSF to the CTI.

**CTI Maximum Delay (µs):** The value from the request shall be in the LS_ACC from the CTR to the QoSF and in the LS_ACC from the QoSF to the CTI.

Copyright International Organization for Standardization
Provided by IHS under license with ISO
No reproduction or networking permitted without license from IHS Not for Resale

**CTI VC Data Field Size:** The value from the request shall be in the LS_ACC from the CTR to the QoSF and in the LS_ACC from the QoSF to the CTI.

**CTR VC_ID:** The field is only meaningful in the LS_ACC and shall contain the CRVC_ID for the CTR. The CTR N_Port shall choose an unassigned value in the range of hex '01' through hex 'FE'. This same value shall be in the LS_ACC from the QoSF to the CTI.

**CTR address identifier:** The value from the LS_ACC from the CTR shall be in the LS_ACC from the QoSF to the CTI. The value in the LS_ACC from the CTR may be different from the value in the QoSR from the QoSF. The CTR address identifier may also be different from the S_ID in the LS_ACC from the CTR. However, the CTR address identifier shall be a valid, native or Alias_ID for the CTR. The CTR address identifier shall be the address identifier used as the S_ID in all Class 4 frames sent by the CTr or the D_ID in all Class 4 frames sent by the CTI for the Class 4-circuit setup by this LS_ACC.

**CTR Maximum Bandwidth (Bytes/s):** The value from the request shall be in the LS_ACC from the CTR to the QoSF and in the LS_ACC from the QoSF to the CTI.

**CTR Minimum Bandwidth (Bytes/s):** The value from the request shall be in the LS_ACC from the CTR to the QoSF and in the LS_ACC from the QoSF to the CTI.

**CTR Maximum Delay (µs):** The value from the request shall be in the LS_ACC from the CTR to the QoSF and in the LS_ACC from the QoSF to the CTI.

**CTR VC Data Field Size:**The value from the request shall be in the LS_ACC from the CTR to the QoSF and in the LS_ACC from the QoSF to the CTI.

**Live VC credit limit:** The VC credit limit for the Fabric in the LS_ACC shall set the VC in the Live State in the LS_ACC from the QoSF to the CTI. This field is not meaningful to the CTR.

**Class 4 end-to-end Credit:** For the CTI, this shall be set by the CTR and represents the maximum Class 4 end-to-end Credit limit as well as the Class 4 end-to-end Credit for a dormant Class 4 circuit. The value in the LS_ACC from the CTR shall be in the LS_ACC from the QoSF to the CTI.

#### 12.3.2.39 Read Virtual Circuit Status (RVCS)

##### 12.3.2.39.1 Description

The RVCS ELS shall request the Virtual Circuit Status in the QoS Facilitator.

##### 12.3.2.39.2 Protocol

a) RVCS Sequence
b) LS_ACC or LS_RJT Reply Sequence

##### 12.3.2.39.3 Request Sequence

**Format:** FT_1

**Addressing:** The S_ID shall designate the source N_Port requesting the VC status. The D_ID field shall designate the QoSF (hex 'FF FF F9').

--`,,```,,,,````-`-`,,`,,`,`,,`---

Copyright International Organization for Standardization
Provided by IHS under license with ISO
No reproduction or networking permitted without license from IHS Not for Resale

**Payload:** The format of the Payload is shown in table 164.

**Table 164 - RVCS Payload**

| Bits / Word | 31 .. 24 | 23 .. 16 | 15 .. 08 | 07 .. 00 |
|---|---|---|---|---|
| **0** | RVCS (hex ’41’) | hex '00' | hex '00' | hex '00' |
| **1** | Reserved | N_Port_ID | | |

#### 12.3.2.39.4 Reply Sequence

**LS_RJT:** LS_RJT signifies rejection of the RVCS command.

**LS_ACC:** LS_ACC signifies that the QoSF has completed the request. The format of the LS_ACC Payload is shown in Table 165.

**Table 165 - RVCS LS_ACC Payload**

| Bits / Word | 31 .. 24 | 23 .. 16 | 15 .. 08 | 07 .. 00 |
|---|---|---|---|---|
| **0** | hex ’02’ | hex '00' | hex '00' | hex '00' |
| **1** | Reserved | | | |
| **2** | Class 4 VC Status Block (see table 166), N = number of Class 4 circuits for the designated N_Port (N x 8 bytes) | | | |
| **..** | | | | |
| **1+(N x 2)** | | | | |

The LS_ACC Sequence contains one entry for each Class 4 circuit setup with the designated N_Port. The format of the Class 4 VC Status Block entry is shown in Table 166.

**Table 166 - Class 4 VC Status Block entry**

| Bits / Word | 31 .. 24 | 23 .. 16 | 15 .. 08 | 07 .. 00 |
|---|---|---|---|---|
| **0** | CTI VC_ID | CTI address identifier | | |
| **1** | CTR VC_ID | CTR address identifier | | |

#### 12.3.2.40 Discover N_Port/Service Parameters (PDISC)

#### 12.3.2.40.1 Description

The PDISC ELS shall transfer Service Parameters from the initiating Nx_Port to the Nx_Port associated with the D_ID without affecting the operating environment between the two ports. This provides the means for exchange of Service Parameters without terminating open Sequences or open Exchanges.

#### 12.3.2.40.2 Protocol

a) PDISC Sequence
b) LS_ACC or LS_RJT Reply Sequence

#### 12.3.2.40.3 Request Sequence

The Payload in PDISC and the LS_ACC are, except for the LS_Command, identical to the Payloads in PLOGI (see 12.3.2.7) and the corresponding LS_ACC (see 12.3.3.2). The interchange of PDISC information shall not modify

--`,,```,,,,````-`-`,,`,,`,`,,`---
Copyright International Organization for Standardization
Provided by IHS under license with ISO
No reproduction or networking permitted without license from IHS Not for Resale

the operating environment or Service Parameters between the two ports. Service Parameters contained in FDISC or PDISC shall be ignored and no error condition shall be reported.

#### 12.3.2.40.4 Reply Sequence

A response shall not be sent to a PDISC if a LR or loop initialization occurs before the LS_ACC is sent. An LS_ACC for a PDISC shall be ignored if a LR or loop initialization occurred between the PDISC and the LS_ACC.

### 12.3.2.41 Discover F_Port Service Parameters (FDISC)

#### 12.3.2.41.1 Description

The FDISC ELS shall transfer Service Parameters from the initiating Nx_Port to the Fx_Port at well-known F_Port_ID (i.e., hex 'FF FF FE'). This provides the means for the exchange of Service Parameters and the assignment of an additional N_Port_IDs without changing service parameters.

#### 12.3.2.41.2 Protocol

a) FDISC Sequence
b) LS_ACC, LS_RJT Reply Sequence

#### 12.3.2.41.3 Request Sequence

The Payload in FDISC and the corresponding LS_ACC are, except for the LS_Command, identical to the Payloads in FLOGI (see 12.3.2.7) and the LS_ACC (see 12.3.3.2). When the S_ID of the FDISC ELS is equal to zero, the FDISC ELS shall transfer an N_Port Name and node name, and request the assignment and login of an additional N_Port_ID. The FDISC ELS with an S_ID equal to zero shall only be sent by an N_Port with at least one N_Port_ID that is currently logged in with the Fabric, and the assignment of an additional N_Port_ID shall not modify the Service Parameters between the two ports.

When the S_ID of the FDISC ELS is set to a previously-assigned N_Port_ID, the FDISC ELS shall contain the N_Port_Name and node name corresponding to that N_Port_ID. The interchange of FDISC information shall not modify the operating environment or Service Parameters between the two ports. Service Parameters contained in FDISC shall be ignored and no error condition shall be reported.

#### 12.3.2.41.4 Reply Sequence

When the S_ID of the FDISC ELS is zero, the D_ID field of the LS_ACC shall be set to the additional N_Port_ID being assigned. When the fabric sends the LS_ACC, it shall consider fabric login to have occurred for the additional N_Port_ID.

When the S_ID of the FDISC ELS is not zero and is currently logged in, the D_ID of the LS_ACC shall be set to the S_ID of the FDISC ELS.

When an FDISC ELS with an S_ID set to zero is sent by an N_Port when no N_Port_ID is logged in, or if the S_ID is set to a non-zero N_Port_ID that is not currently logged in, then an LS_RJT shall be returned to the S_ID of the FDISC ELS.

### 12.3.2.42 Discover Address (ADISC)

#### 12.3.2.42.1 Description

The ADISC ELS shall exchange addresses and identifiers of communicating Nx_Ports.

#### 12.3.2.42.2 Protocol

a) ADISC Sequence

Copyright International Organization for Standardization
Provided by IHS under license with ISO
No reproduction or networking permitted without license from IHS Not for Resale

b) LS_ACC or LS_RJT Reply Sequence

#### 12.3.2.42.3 Request Sequence

The ADISC Payload format is shown in table 167.

**Table 167 - ADISC Payload**

| Bits / Word | 31 .. 24 | 23 .. 16 | 15 .. 08 | 07 .. 00 |
|---|---|---|---|---|
| 0 | ADISC (hex ’52’) | hex '00' | hex '00' | hex '00' |
| 1 | Reserved | Hard Address of Originator | | |
| 2 | MSB | N_Port_Name of Originator (8 bytes) | | |
| 3 | | | | LSB |
| 4 | MSB | Node_Name of Originator (8 bytes) | | |
| 5 | | | | LSB |
| 6 | Reserved | N_Port_ID of Originator | | |

#### 12.3.2.42.4 Reply Sequence

The LS_ACC Payload format is shown in table 168.

A Hard Address is the 24-bit L_Port_ID that consists of

a) the 8-bit Domain address in the most significant byte,
b) the 8-bit Area address in the next most significant byte, and
c) the 8-bit AL_PA that an L_Port attempts to acquire in the LIHA sequence during loop initialization in the least significant byte (See [2], FC-AL-2).

If an L_Port does not have a hard address, or if a port does not have FC-AL-2 capability, it shall report zeroes in this field.

**Table 168 - ADISC LS_ACC Payload**

| Bits / Word | 31 .. 24 | 23 .. 16 | 15 .. 08 | 07 .. 00 |
|---|---|---|---|---|
| 0 | hex ’02’ | hex '00' | hex '00' | hex '00' |
| 1 | Reserved | Hard Address of Responder | | |
| 2 | MSB | N_Port_Name of Responder (8 bytes) | | |
| 3 | | | | LSB |
| 4 | MSB | Node_Name of Responder (8 bytes) | | |
| 5 | | | | LSB |
| 6 | Reserved | N_Port_ID of Responder | | |

N_Port_Name in ADISC is the 8-byte N_Port_Name of the Originator and N_Port_Name in LS_ACC to ADISC is the 8-byte N_Port_Name of the Responder.

Node_Name in ADISC is the 8-byte Node_Name of the Originator and Node_Name in LS_ACC to ADISC is the 8-byte Node_Name of the Responder.

Copyright International Organization for Standardization
Provided by IHS under license with ISO
No reproduction or networking permitted without license from IHS Not for Resale

N_Port_ID is the 24-bit S_ID used in the header of the ADISC frame (for the Originator) or LS_ACC frame (for the Responder).

A response shall not be sent to an ADISC if an LR or loop initialization occurs before the LS_ACC is sent. An LS_ACC for a ADISC shall be ignored if an LR or loop initialization occurred between the ADISC and the LS_ACC.

Table 169 summarizes the responses to FDISC, PDISC and ADISC.

**Table 169 - Response summary to FDISC/PDISC**

| ELS command | Port Status | Nx_Port | Fx_Port | |
|---|---|---|---|---|
| | | Class 1, 2, 3, 4 | Class 1, 2, or 4 | Class 3 |
| FDISC | Logged in | LS_RJT [a] | LS_ACC | LS_ACC |
| | Not Logged in | LS_RJT [a] | F_RJT [b] | Discard |
| PDISC[c] | Logged in | LS_ACC | F_RJT [b] | Discard |
| | Not Logged in | LS_RJT [a] | F_RJT [b] | Discard |
| ADISC | Logged in | LS_ACC | F_RJT [b] | Discard |
| | Not Logged in | LS_RJT [a] | F_RJT [b] | Discard |

[a] LS_RJT may be issued with a reason code = "Unable to supply requested data".

[b] F_RJT may be issued with a reason code = "Login required".

[c] If an FC_Port receives a PDISC from an Nx_Port with which it has not logged in or receives an FDISC, it may choose to issue a Logout or OLS.

### 12.3.2.43 Third Party Process Logout (TPRLO)

#### 12.3.2.43.1 Description

The TPRLO ELS shall be used to invalidate the operating environments between the specified image(s) at the recipient Nx_Port and the specified image(s) in the specified Nx_Port(s) that have performed Process Login with the recipient Nx_Port for the specified TYPE.

If the recipient Nx_Port is not logged in with the requesting port it shall reply with an LS_RJT ELS Sequence with a reason code of “Unable to perform command request” with a reason code explanation of “N_Port Login required”.

TPRLO has the same effect on the recipient Nx_Port as if all specified Third Party Originators performed PRLO with the recipient Nx_Port using the specified Process Associators.

#### 12.3.2.43.2 Protocol

a) TPRLO Request Sequence
b) LS_ACC or LS_RJT Reply Sequence

#### 12.3.2.43.3 Request Sequence

**Format:** FT_1

Copyright International Organization for Standardization
Provided by IHS under license with ISO
No reproduction or networking permitted without license from IHS Not for Resale

**Addressing:** The S_ID field designates the Nx_Port initiating TPRLO. The D_ID field designates the destination Nx_Port of the TPRLO.

**Payload:** The TPRLO format is shown in table 170.

**Table 170 - TPRLO Payload**

| Bits / Word | 31 .. 24 | 23 .. 16 | 15 .. 08 | 07 .. 00 |
|---|---|---|---|---|
| 0 | TPRLO (hex ’24’) | Page Length (hex'10’) | Payload Length | |
| 1 | | Logout Parameter pages (16 - max. bytes) | | |
| .. | | | | |
| n | | | | |

The TPRLO Logout parameter page format is shown in table 171.

**Table 171 - TPRLO logout parameter page format**

| Item | Word | Bit |
|---|---|---|
| TYPE Code or Common Service Parameters | 0 | 31 to 24 |
| TYPE Code Extension | 0 | 23 to 16 |
| Third Party Originator Process _Associator Validity | 0 | 15 |
| Responder Process_Associator Validity | 0 | 14 |
| Third Party Originator N_Port_ID Validity | 0 | 13 |
| Global Process Logout | 0 | 12 |
| Reserved | 0 | 11 to 0 |
| Third Party Originator Process_Associator | 1 | 31 to 0 |
| Responder Process_Associator | 2 | 31 to 0 |
| Reserved | 3 | 31 to 24 |
| Third Party Originator N_Port_ID | 3 | 23 to 0 |

The TPRLO LS_ACC Payload format is shown table 172.

**Table 172 - TPRLO LS_ACC Payload**

| Bits / Word | 31 .. 24 | 23 .. 16 | 15 .. 08 | 07 .. 00 |
|---|---|---|---|---|
| 0 | hex ’02’ | Page Length (hex '10’) | Payload Length | |
| 1 | | Logout Parameter pages (16 - max. bytes) | | |
| .. | | | | |
| n | | | | |

Copyright International Organization for Standardization
Provided by IHS under license with ISO
No reproduction or networking permitted without license from IHS Not for Resale

Third Party Originator Process Associator validity, if set to one, indicates that the Responder Process_Associator field is meaningful.

The Global bit, if set to one, specifies that all image pairs for all Nx_Ports with which Process Login has been performed be removed from the recipient Nx_Port for the specified TYPE. If the Global bit is set to one, only one logout parameter page shall be transmitted, and only the TYPE code and TYPE code extension fields shall have meaning (aside from the Global bit itself). If the Global bit is set to one, it frees all resources associated with the establishment of all image pairs of the specified TYPE at the recipient Nx_Port.

Third Party Originator N_Port_ID validity, if set to one, indicates that the Third Party Originator N_Port_ID field is meaningful.

The Third Party Originator Process_Associator specifies the Process Associator associated with the image to be removed.

The Third Party Originator N_Port_ID specifies the Nx_Port associated with the image to be removed.

All other fields have the same meaning as described in PRLO.

The minimum TPRLO Payload length is 20 bytes.

#### 12.3.2.44 Clock Synchronization Request (CSR)

##### 12.3.2.44.1 Description

The CSR ELS shall be used to request the Clock Synchronization Server to either send or to quit sending periodic Clock Synchronization Update (CSU) ELS frames or clock synchronization primitives, depending on the method implemented. See 27.2 and 27.3.

##### 12.3.2.44.2 Protocol

a) Clock Synchronization Request Sequence
b) LS_ACC or LS_RJT Reply Sequence

##### 12.3.2.44.3 Request Sequence

**Format:** FT_1

**Addressing:** The S_ID field designates the source Nx_Port requesting clock synchronization updates. The D_ID field designates either the Clock Synchronization Server (hex 'FF FF F6') or the Fabric Controller (hex 'FF FF FD').

**Payload:** The format of the Payload is shown in table 261.

##### 12.3.2.44.4 Reply Sequence

**LS_RJT:** LS_RJT signifies rejection of the CSR command.

**LS_ACC:** LS_ACC signifies that the Clock Synchronization Server agrees to perform the action requested in the CSR Payload. The format of the LS_ACC Payload is shown in table 263. The Clock Sync Mode item in the CSR LS_ACC Payload shall contain the value that was received in the Clock Sync Mode item of the CSR Payload.

#### 12.3.2.45 Clock Synchronization Update (CSU)

##### 12.3.2.45.1 Description

The CSU ELS shall be used by the Clock Synchronization Server to send its current clock value to its clients. (see 27.2.4.3)

--`,,```,,,,````-`-`,,`,,`,`,,`---

Copyright International Organization for Standardization
Provided by IHS under license with ISO
No reproduction or networking permitted without license from IHS Not for Resale

#### 12.3.2.45.2 Protocol

a) Clock Synchronization Update Request Sequence
b) No Reply Sequence

#### 12.3.2.45.3 Request Sequence

**Format:** FT_1

**Information Category:** The Information Category value (Header word 0, bits 24 to 27) shall indicate Solicited Data ('0001' b).

**Addressing:** The S_ID field designates the Clock Synchronization Server well-known address (hex 'FF FF F6'). The D_ID field designates the Nx_Port(s) that is/are to receive the clock information.

**Payload:** The format of the Payload is shown in table 265

#### 12.3.2.45.4 Reply Sequence

none.

### 12.3.2.46 Login Control List Management (LCLM)

#### 12.3.2.46.1 Description

The LCLM ELS supports the management of a Login Control List (LCL) for Login Control. Login Control is the authentication of PLOGIs by an Nx_Port based on information stored in the Nx_Port about the originator of the PLOGI. The Nx_Port should use an LCL to determine which originators are allowed to perform a PLOGI.

This optional ELS is applicable for operation between an Originator Nx_Port and a Responder Nx_Port. Nx_Ports that comply with the Login Control function shall implement the Login Control List Management ELS. It enables an originator to manage an LCL in Nx_Ports that are utilizing Login Control. It may be sent prior to PLOGI in order to perform the clear LCL command.

The LCLM ELS shall provide a method for managing the LCL in a Nx_Port. The normal response shall be a LS_ACC ELS Sequence. This LS_ACC shall indicate that the LCL modification has been received by the destination Nx_Port. If the recipient Nx_Port is unable to queue commands or is temporarily unable to process the ELS, it shall respond with a LS_RJT ELS with a reason code of "Logical busy". If the recipient Nx_Port does not support the LCLM ELS, it shall reply with an LS_RJT ELS Sequence with a reason code of "Command not supported". If the recipient Nx_Port does not allow this Nx_Port to perform Login Control List Management, it shall reply with an LS_RJT ELS Sequence with a reason code of "Unable to perform command request" and reason-code explanation of "Invalid Originator S_ID".

The LCLM ELS may be sent by an Nx_Port to an Nx_Port for which it has the capability of managing the LCL. More than one Nx_Port may be allowed to manage the LCL on a given Nx_Port. This is determined by the capabilities that the first Nx_Port to send an LCL to the Nx_Port sets for other originators.

When the LCLM ELS recipient supports LCL management by the originator of the LCLM ELS, it shall perform the requested LCLM command and return an LS_ACC Reply Sequence.

The mechanisms whereby the Nx_Port implements login control based on the LCLM ELS is beyond the scope of this standard.

LCLM operates by sending a command to a Nx_Port. The command shall be of the following:

a) an addition of a Port/Node_Name to the LCL stored on the Nx_Port
b) the deletion of a Port/Node_Name from the LCL stored on the Nx_Port

Copyright International Organization for Standardization
Provided by IHS under license with ISO
No reproduction or networking permitted without license from IHS Not for Resale

c) a Read of the LCL stored on the Nx_Port for a given Port/Node_Name
d) a Read of the list of Port/Node_Names in the LCL on the Nx_Port
e) a clear of the entire LCL on the Nx_Port

The originator of any LCL Request shall be able to accept LS_RJT, reason code of “Logical busy, and a reason code explanation of “Command (request) already in progress” or “Unable to supply requested data”.

**LCLM addition:** An LCLM addition shall add a Port/Node_Name and the associated capabilities to the LCL. Responses may be one of the following:

a) If the originator of the LCLM Addition is not in the LCL and there are Port/Node_Names in the LCL with the LCL Management bit set to one, an LS_RJT shall be returned with a reason code of “Unable to perform command request” and reason code explanation of “Invalid Originator S_ID”.
b) If the originator of the LCLM Addition is in the LCL and there are Port/Node_Names in the LCL with the LCL Management bit set to one and the LCL Management bit for this Port/Node_Name is set to zero, an LS_RJT shall be returned with a reason code of “Unable to perform command request” and reason code explanation of “Invalid Originator S_ID”.

**LCLM deletion:** An LCLM deletion shall delete any LCL record for the Port/Node_Name in the ELS. Responses may be one of the following:

a) If the originator of the LCLM Deletion is not in the LCL and there are Port/Node_Names in the LCL with the LCL Management bit set to one, an LS_RJT shall be returned with a reason code of “Unable to perform command request” and reason code explanation of “Invalid Originator S_ID”.
b) If the originator of the LCLM Deletion is not in the LCL and there are Port/Node_Names in the LCL with the LCL Management bit set to one and the LCL Management bit for this Port/Node_Name is set to zero, a LS_RJT shall be returned with a reason code of “Unable to perform command request” and reason code explanation of “Invalid Originator S_ID”.
c) If the Port/Node_Name in the LCLM deletion is not currently in the LCL of the Nx_Port, the Nx_Port shall return the LS_ACC as if the Port/Node_Name had been in the LCL, and had been deleted. If the Port/Node_Name was in the LCL, and the Port was currently logged in, a LOGO shall be sent to the Port.

**LCLM read:** An LCLM Read shall return the global capabilities of the given Port/Node_Name for the Nx_Port that was queried. Responses may be one of the following:

a) If the originator of the LCLM Read is not in the LCL and there are Port/Node_Names in the LCL with the LCL Management bit set to one, a LS_RJT shall be returned with a reason code of “Unable to perform command request” and reason code explanation of “Invalid Originator S_ID”.
b) If the originator of the LCLM Read is not in the LCL and there are Port/Node_Names in the LCL with the LCL Management bit set to one and the LCL Management bit for this Port/Node_Name is set to zero, a LS_RJT shall be returned with a reason code of “Unable to perform command request” and reason code explanation of “Invalid Originator S_ID”. The format of the LS_ACC shall be the same as the format for the LCLM ELS that added the Port/Node_Name to the LCL on the Nx_Port.
c) If the Port/Node_Name is not in the LCL of the Nx_Port, the Nx_Port shall return an LS_RJT ELS Sequence with a reason code of “Unable to perform command request” and reason code explanation of “Invalid Port/Node_Name”.
d) If the Nx_Port is unable to access the requested the data, a LS_RJT ELS Sequence with reason code of “Logical busy” and reason code explanation of “Unable to supply requested data” shall be returned.

**LCLM read list:** An LCLM Read List shall return a list of the Port/Node_Name pairs currently in the LCL of the Nx_Port starting at Index. The number of entries that are returned in the LS_ACC to the LCL read list is determined by the maximum frame length of the LCL LS_ACC (256 bytes). The end of the list should be determined using the value returned in Max Index. Responses may be one of the following:

a) If the originator of the LCLM Read List is not in the LCL and there are Port/Node_Names in the LCL with the LCL Management bit set to one and the LCL Management bit for this Port/Node_Name is set to zero, a LS_RJT shall be returned with a reason code of “Unable to perform command request” and reason code explanation of “Invalid Originator S_ID”.

--`,,```,,,,````-`-`,,`,,`,`,,`---

Copyright International Organization for Standardization
Provided by IHS under license with ISO
No reproduction or networking permitted without license from IHS Not for Resale

b) If there are no Port/Node_Names in the LCL, the Nx_Port shall return a LS_ACC with a Payload length of hex '1C' and no Port/Node_Names listed.

**Clear LCL:** An LCLM clear shall clear all entries in the LCL. Responses may be one of the following:

a) If the originator of the LCLM Read List is not in the LCL and there are Port/Node_Names in the LCL with the LCL Management bit set to one and the LCL Management bit for this Port/Node_Name is set to zero, a LS_RJT shall be returned with a reason code of “Unable to perform command request” and reason code explanation of “Invalid Originator S_ID”.
b) If there are no Port/Node_Names in the LCL, the Nx_Port shall return a LS_ACC with a Payload length of hex '1C' and no Port/Node_Names listed.

This allows recovery from a missing LCL manager, or a move of an Nx_Port with LCL from one configuration to another. This should only be used by an Nx_Port that has knowledge that it should be allowed to rebuild the LCL.

#### 12.3.2.46.2 Protocol

a) Login Control List Management (LCLM) Request Sequence
b) LS_ACC or LS_RJT Reply Sequence

#### 12.3.2.46.3 Request Sequence

**Format:** FT_1

**Addressing:** The S_ID field designates the requesting source Nx_Port. The D_ID field designates the Nx_Port receiving the LCLM Request.

**Payload:** The format of the LCLM Payload is shown in table 173.

**Table 173 - LCLM Payload**

| Bits / Word | 31 .. 24 | 23 .. 16 | 15 .. 08 | 07 .. 00 |
|---|---|---|---|---|
| 0 | LCLM (hex ’25’) | reserved | Payload Length (hex '1C') | |
| 1 | Reserved | | LCLM command | Global Capabilities |
| 2 | MSB | N_Port_Name (8 bytes) | | |
| 3 | | | | LSB |
| 4 | MSB | Node_Name (8 bytes) | | |
| 5 | | | | LSB |
| 6 | Reserved | | Index | |

a) **Payload length:** Bytes 2 to 3 of word 0 contain the Payload length of this ELS. This shall be set to hex '1C'.

Copyright International Organization for Standardization
Provided by IHS under license with ISO
No reproduction or networking permitted without license from IHS Not for Resale

b) **LCLM Command:** Byte 2 of word 1 contains a value that indicates one of the LCLM commands as shown in table 174.

**Table 174 - LCLM Commands**

| LCLM Command | Value |
|---|---|
| Read LCL entry | hex '00' |
| Add LCL entry | hex '01' |
| Delete LCL entry | hex '02' |
| Read LCL list | hex '03' |
| Clear LCL | hex '04' |

c) **Global Capabilities:** Byte 3 of Word 1 contains global capabilities. The format of the Global capabilities byte is described in table 175.

**Table 175 - Global capabilities**

| Item | Word | Bits |
|---|---|---|
| Reserved | 1 | 7 to 1 |
| LCL Management | 1 | 0 |

Bit zero is defined as LCL Management. This bit Identifies that the Port/Node_Name in this LCLM may manage the LCL. If any entry in the LCL has this bit set to one, then only those entries that have this bit set to one are allowed to perform LCLM commands, except the Clear LCL command. A Management Server (hex 'FF FF FA') may use the clear LCL command regardless of the LCL management bit setting. If no entry in the LCL has this bit set to one then any Nx_Port may perform LCLM commands.

d) **N_Port and node Name:** The values in these fields are LCLM command dependent as shown in table 176.

**Table 176 - N_Port and node Name Field Values**

| Command | Value |
|---|---|
| Read LCL entry | N_Port and node Names for which the global capabilities are requested |
| Add LCL entry | N_Port and node Names to be added to the LCL |
| Delete LCL entry | N_Port and node Names to be added to the LCL |
| Read LCL list | Shall contain all zeros |
| Clear LCL | Shall contain all zeros |

e) **Index:** Bytes 2 to 3 of Word 6 is a signed integer index into the LCL. The index is based on the number of the Port/Node_Name pair, not a byte index. This is used to indicate the starting index of the group of Port/Node_Names that a Read LCL list Request is requesting. The first entry is at index hex '0'. For all other LCLM commands this field is reserved and shall be set to hex '0'.

#### 12.3.2.46.4 Reply sequence

**LS_RJT:** LS_RJT signifies rejection of the LCLM Request

Copyright International Organization for Standardization
Provided by IHS under license with ISO
No reproduction or networking permitted without license from IHS Not for Resale

**LS_ACC:** LS_ACC signifies successful completion of the LCLM Request. The format of the LS_ACC Payload is shown in table 177.

**Table 177 - LCLM LS_ACC Payload**

| Bits / Word | 31 .. 24 | 23 .. 16 | 15 .. 08 | 07 .. 00 |
|---|---|---|---|---|
| 0 | hex '02' | reserved | Payload Length | |
| 1 | Reserved | | LCLM command | Global Capabilities |
| 2 | MSB | N_Port_Name (8 bytes) | | |
| 3 | | | | LSB |
| 4 | MSB | Node_Name (8 bytes) | | |
| 5 | | | | LSB |
| 6 | List Length | | Index | |
| 7 | MSB | N_Port_Name 1 in list (8 bytes) | | |
| 8 | | | | LSB |
| 9 | MSB | Node_Name 1 in list (8 bytes) | | |
| 10 | | | | LSB |
| .. | .. | | | |
| 3+(n x 4) | MSB | N_Port_Name n in list (8 bytes) | | |
| 4+(n x 4) | | | | LSB |
| 5+(n x 4) | MSB | Node_Name n list (8 bytes) | | |
| 6+(n x 4) | | | | LSB |

**a) Payload length:** Bytes 2 to 3 of word 0 contain a value that specifies the length of the LCLM LS_ACC Payload. The right-most four bits shall be '1100' b. The value specified shall be greater than or equal to 28, and less than or equal to 252.

**b) LCLM Command:** Byte 2 of word 1 contains a value that indicates one of the following LCLM commands that this response corresponds to as defined in table 174.

**c) Global Capabilities:** Byte 3 of Word 1 contains the Global capabilities. The format of the Global capabilities byte is described in table 178. This is reserved and set to zero for the "read LCL list" and "clear LCL list" commands.

**Table 178 - Global capabilities**

| Item | Word | Bits |
|---|---|---|
| Reserved | 1 | 7 to 1 |
| LCL Management | 1 | 0 |

Bit zero is defined as LCL Management. This bit Identifies that the Port/Node_Name in this LCLM may manage the LCL. If any entry in the LCL has this bit set to one, then only those entries that have this bit set to one are allowed to perform LCLM commands to this Nx_Port. If no entry in the LCL has this bit set to one then any Nx_Port may perform LCLM commands.

--`,,```,,,,````-`-`,,`,,`,`,,`---

Copyright International Organization for Standardization
Provided by IHS under license with ISO
No reproduction or networking permitted without license from IHS Not for Resale

**d) List Length:** Byte 0 to 1 of Word 6 is a signed integer reporting the number of Port/Node_Names in the LCL list after performing the requested LCL command. This field is required for all responses. It is reserved and set to hex '0' for all commands.

**e) Index:** Byte 2 to 3 of Word 6 is a 16 bit index into the LCL list. The index is based on the number of the Port/Node_Name pair, not a byte index. This is used to indicate the starting index of the group of Port/ Node_Names that a Read LCL list LS_ACC is reporting. The first entry is at index hex '0'. The LS_ACC for any LCL command other than a Read LCL shall return hex '0' in this field. All LCLM commands other than a Read LCL list shall set this value to hex '0'.

**f) N_Port and node Name:** The values in these fields correspond to the N_Port and node Name of the N_Port that is replying to the LCLM Request.

**g) Port/Node_Name List:** For the Read LCL command, Word 7 to the end of the LCLM LS_ACC Payload contains the Port/Node_Name list of the Nx_Port. The List contains a list of the Port/Node_Name pairs that are currently registered in the Nx_Port's LCL. For all other commands, word 5 of the Payload shall be the last word.

### 12.3.2.47 Read Port Status Block (RPS)

#### 12.3.2.47.1 Description

The RPS ELS shall request an FC_Port to return port status associated with the port specified in the Payload of this frame. The ability to request status information for FC_Ports other than the FC_Port addressed in the frame header is useful in the absence of a management server.

#### 12.3.2.47.2 Protocol

a) Read Port Status Request Sequence
b) LS_ACC or LS_RJT Reply Sequence

#### 12.3.2.47.3 Request Sequence

**Format:** FT_1

**Addressing:** The S_ID field designates the source Nx_Port requesting the Link Error Status Block. The D_ID field designates the destination Nx_Port or the Domain Controller (hex 'FF FC' || Domain_ID) to which the request is being made.

**Payload:** The format of the Payload is shown in table 179.

**Table 179 - RPS Payload**

| Bits / Word | 31 .. 24 | 23 .. 16 | 15 .. 08 | 07 .. 00 |
|---|---|---|---|---|
| 0 | RPS (hex '56') | Reserved | | Flag |
| 1 | MSB | Port Selection (8 bytes) | | |
| 2 | | | | LSB |

Copyright International Organization for Standardization
Provided by IHS under license with ISO
No reproduction or networking permitted without license from IHS Not for Resale

**a) Flag:** The values for the flag field are given in table 180. No more than one bit shall be set in the Flag field at a time. If no bits are set to one, the port selection field is ignored and the RPS Request is for the port identified in the frame header D_ID.

**Table 180 - Flag field bit definitions**

| Value | Meaning |
|---|---|
| hex ’00’ | The port identified by the D_ID of the request |
| hex ’01’ | The port identified by the physical port number in the port selection field |
| hex ’02’ | The port identified by the Port_Name in the port selection field |
| Reserved | Other values |

**b) Port selection:** Contains either an N_Port_Name or physical port number of the port for which the port status information is being requested. The type of port selection is indicated in the Flag field. A physical port number uniquely identifies an Nx_Port or Fx_Port contained in a unit. Physical port numbers may be obtained using the RPL ELS, RNID ELS or by implicit means.

### 12.3.2.47.4 Reply Sequence

**LS_RJT:** LS_RJT signifies rejection of the RPS command.

**LS_ACC:** The format of the LS_ACC Payload is shown in table 181.

**Table 181 - RPS LS_ACC Payload**

| Bits / Word | 31 .. 24 | 23 .. 16 | 15 .. 08 | 07 .. 00 |
|---|---|---|---|---|
| 0 | hex ’02’ | Reserved | | Flag |
| 1 | Reserved | | Port Status | |
| 2 | MSB | LESB (24 bytes) | | |
| .. | | | | |
| 7 | | | | LSB |
| 8 | MSB | L_Port Extension (32 bytes) | | |
| .. | | | | |
| 15 | | | | LSB |

**a) Flag:** The values for the flag field are given in table 182.

**Table 182 - Flag field bit definitions**

| Meaning | Bit(s) |
|---|---|
| Reserved | 7 to 1 |
| L_Port Extension Valid - When set to one, the L_Port Extension block is included in the RPS LS_ACC Payload. When set to zero, the RPS LS_ACC Payload ends with the LESB data. | 0 |

Copyright International Organization for Standardization
Provided by IHS under license with ISO
No reproduction or networking permitted without license from IHS Not for Resale

**b) Port Status:** The values for the port status field are given in table 183.

**Table 183 - Port Status**

| Item | Word | Bit |
|---|---|---|
| Reserved | 1 | 15 to 6 |
| point-to-point - When set to one, the port is connected point-to-point with another port. | 1 | 5 |
| Loop mode - When set to one, the port is in FC-AL mode. | 1 | 4 |
| Fabric present - When set to one, the port has detected an F_Port in a point-to-point connection or an FL_Port in loop mode. | 1 | 3 |
| Loss-of-Signal - When set to one, the port is not receiving an input signal. When set to zero, port is receiving an input signal or the status is not supported. | 1 | 2 |
| Loss-of-Synchronization - When set a one, the port is in the Loss-of-Synchronization State. | 1 | 1 |
| Link Reset Protocol- When set to one, the port is currently in the Link Reset Protocol. | 1 | 0 |

**c) LESB:** See 21.8 for the definition of the Link Error Status Block (LESB).

**d) L_Port_Extension:** The definition of the L_Port_Extension field is given in table 184.

**Table 184 - L_Port_Extension**

| Bits / Word | 31 .. 24 | 23 .. 16 | 15 .. 08 | 07 .. 00 |
|---|---|---|---|---|
| **0** | Reserved | | L_Port Status | |
| **1** | Reserved | | | LIP AL_PS |
| **2** | LIP F7 Initiated Count | | | |
| **3** | LIP F7 Received Count | | | |
| **4** | LIP F8 Initiated Count | | | |
| **5** | LIP F8 Received Count | | | |
| **6** | LIP Reset Initiated Count | | | |
| **7** | LIP Reset Received Count | | | |

Copyright International Organization for Standardization
Provided by IHS under license with ISO
No reproduction or networking permitted without license from IHS Not for Resale

**e) L_Port_Status:** The definition of the L_Port_Status field is given in table 185. If all bits in L_Port Status are zero, the port is not currently functional or does not support this status.(See [2], FC-AL-2) for definition of the terms used).

**Table 185 - L_Port Status**

| Item | Word | Bit |
|---|---|---|
| OLD-PORT - When set to one, the Loop Port State Machine is in the OLD-PORT State. | 0 | 15 |
| MONITORING – When set to one, the Loop Port State Machine is in the MONITORING State. | 0 | 14 |
| ABITRATING - When set to one, the Loop Port State Machine is in the ABITRATING State. | 0 | 13 |
| OPEN - When set to one, the Loop Port State Machine is in the OPEN State. | 0 | 12 |
| OPENED - When set to one, the Loop Port State Machine is in the OPENED State. | 0 | 11 |
| XMITTED_CLOSE When set to one, the Loop Port State Machine is in the XMITTED_CLOSE State. | 0 | 10 |
| RECEIVED_CLOSE - When set to one, the Loop Port State Machine is in the RECEIVED_CLOSE State. | 0 | 9 |
| TRANSFER When set to one, the Loop Port State Machine is in the TRANSFER State. | | 8 |
| Reserved | | 7 to 3 |
| LIP(F7,xx) Loop Initialization in process - When set to one, the port is performing the Loop Initialization Process defined by FC-AL-2 initiated by a LIP(F7,xx). | | 2 |
| LIP(F8,xx) Loop Initialization in process - When set to one, the port is currently performing the Loop Initialization Process defined by FC-AL-2 initiated by a LIP(F8,xx). | | 1 |
| LIP(AL_PD,xx) Loop Initialization in process - When set to one, the port is currently performing the Loop Initialization Process defined by FC-AL-2 initiated by a LIP(AL_PD,xx). | | 0 |

**f) LIP AL_PS:** field contains the fourth character of the received LIP. A value of hex 'FF' indicates the port does not support this field.

**g) LIP F7 Initiated Count:** The number of loop initialization processes originated by the port with LIP (F7,xx) (Initialize LIP).

**h) LIP F7 Received Count:** The number of loop initialization processes initiated on the port by receiving (F7,xx) (Initialize LIP).

**i) LIP F8 Initiated Count:** The number of loop initialization processes originated by the port with (F8,xx) (Failure LIP).

**j) LIP F8 Received Count:** The number of loop initialization processes initiated on the port by receiving (F8,xx) (Failure LIP).

**k) LIP Reset Initiated Count:** The number of loop initialization processes originated by the port with (AL_PD,xx) (Reset LIP).

**l) LIP Reset Received Count:** The number of loop initialization processes initiated on the port by receiving (AL_PD,xx) (Reset LIP).

Copyright International Organization for Standardization
Provided by IHS under license with ISO
No reproduction or networking permitted without license from IHS Not for Resale

### 12.3.2.48 Read Port List (RPL)

#### 12.3.2.48.1 Description

The RPL ELS provides internal node port identification information. This information allows the requesting port to direct a request for status of other ports using selection protocol outside the normal Fibre Channel address structure.

The internal port identification information is in the form of a list of available port entries addressed by an entry number index.

#### 12.3.2.48.2 Protocol

a) Report Port List (RPL) Request Sequence
b) LS_ACC or LS_RJT Reply Sequence

#### 12.3.2.48.3 Request Sequence

**Format:** FT_1

**Addressing:** The S_ID field designates the source Nx_Port requesting the port numbers information. The D_ID field designates the destination Nx_Port or the Domain Controller (hex 'FF FC' || Domain_ID) to which the request is being made.

**Payload:** The format of the RPL Payload is shown in table 186.

**Table 186 - RPL Payload**

| Bits / Word | 31 .. 24 | 23 .. 16 | 15 .. 08 | 07 .. 00 |
|---|---|---|---|---|
| 0 | RPL (hex '57') | Reserved | | |
| 1 | Reserved | | Maximum Size | |
| 2 | Reserved | Index | | |

**a) Maximum Size:** This field manages the size of the information returned in an RPL LS_ACC. The sender of an RPL may specify the maximum size of the RPL LS_ACC it is able to receive. The recipient of the RPL shall return information equal to or less than the maximum size value in the RPL. The values for Maximum Size shall be interpreted as shown in table 187.

**Table 187 - Maximum Size values**

| Value | Meaning |
|---|---|
| hex '00 00' | No Maximum Size indicated; the RPL LS_ACC may be any size. |
| hex 'FF FF' | Reserved. |
| hex 'XX XX' | Any other value: The encoded value indicates the maximum number of words that shall be sent in the RPL LS_ACC, not inclusive of the command word 0. |

**b) Index:** The entry number of the first port number block being requested in this RPL. The index for the first entry in the list is 0.

Copyright International Organization for Standardization
Provided by IHS under license with ISO
No reproduction or networking permitted without license from IHS Not for Resale

#### 12.3.2.48.4 Reply Sequence

**LS_RJT:** LS_RJT signifies rejection of the RPL command

**LS_ACC:**

The RPL LS_ACC returns a list of the port number information. The format of the RPL LS_ACC Payload is shown table 188.

**Table 188 - RPL LS_ACC Payload**

| Bits / Word | 31 .. 24 | 23 .. 16 | 15 .. 08 | 07 .. 00 |
|---|---|---|---|---|
| **0** | hex ’02’ | Reserved | Payload Length | |
| **1** | Reserved | List Length | | |
| **2** | Reserved | Index | | |
| **3** | MSB | Port number block 1 (Each entry is 16 bytes) | | |
| **..** | | | | |
| **6** | | | | LSB |
| **..** | | | | |
| **(n x 4)-1** | MSB | Port number block n | | |
| **..** | | | | |
| **2+(n x 4)** | | | | LSB |

**a) Payload Length:** a value that specifies the length of the RPL LS_ACC Payload in bytes.

**b) List Length:** The total number of Port Number Blocks accessible through the recipient port.

**c) Index:** The entry number for the first Port Number Block in the LS_ACC Payload.

**d) Port Number Blocks:** See table 189 for the contents of the Port Number Block. n is the number of Port Number Blocks in this LS_ACC.

**Table 189 - Port Number Block**

| Bits / Word | 31 .. 24 | 23 .. 16 | 15 .. 08 | 07 .. 00 |
|---|---|---|---|---|
| **0** | Physical port number | | | |
| **1** | Reserved | Port_ID | | |
| **2** | MSB | Port Name (8 bytes) | | |
| **3** | | | | LSB |

A Port_ID of all zeros indicates the port currently does not have a valid address.

The physical port number is unique identification of the port within the node.

#### 12.3.2.49 Report Port Buffer Conditions (RPBC)

#### 12.3.2.49.1 Description

The RPBC ELS shall provide a method for a Port to report its buffer conditions. The normal response to an RPBC

Copyright International Organization for Standardization
Provided by IHS under license with ISO
No reproduction or networking permitted without license from IHS Not for Resale

ELS Sequence shall be a LS_ACC ELS Sequence. If the recipient Port does not support the RPBC ELS, it shall reply with an LS_RJT ELS Sequence with a reason code of “command not supported”.

#### 12.3.2.49.2 Protocol

a) Report Port Buffer Conditions (RPBC) Request Sequence
b) LS_ACC or LS_RJT Reply Sequence

#### 12.3.2.49.3 Request Sequence

**Format:** FT_1

**Addressing:** The S_ID designates the source port that is requesting port buffer conditions. The D_ID field designates the recipient that is to process the RPBC request and report buffer conditions.

**Payload:** The format of the RPBC Payload is shown in table 190.

**Table 190 - RPBC Payload**

| Bits / Word | 31 .. 24 | 23 .. 16 | 15 .. 08 | 07 .. 00 |
|---|---|---|---|---|
| **0** | RPBC (hex ’58’) | Reserved | | |
| **1** | ELS Buffer Parameters | | | |
| **2** | Reserved | Originator S_ID | | |

The ELS Buffer Parameter field contained in word 1 of the RPBC Payload relates to the ELS buffer conditions of the sender of the RPBC ELS and the contents is shown in table 191.

**Table 191 - ELS Buffer Parameters Field**

| Bits | Field Name |
|---|---|
| 31 | Multi-frame ELS sequence supported |
| 30 to 12 | Reserved. |
| 11 to 00 | ELS Receive Data Field Size |

The Multi-frame ELS sequence supported bit indicates that the port either supports multi-frame ELS's (bit 31=1) or does not support multi-frame ELS's (bit 31=0).

The ELS Receive Data Field Size field (word 1, bits 11 to 0) specifies the largest FT_1 ELS frame that may be received by the FC_Port responding with the RPBC LS_ACC. Values shall be a multiple of four bytes, and less than 128 or greater than 2 112 are invalid. For each class of service, the maximum usable ELS Receive Data Field Size is the lessor of the reported ELS Receive Data Field Size or the buffer-to-buffer Receive Data Field Size reported during Login.

NOTE If a 256 byte login is required when the buffer conditions of the destination port are unknown, a timeout may be avoided with the following procedure. Issue a login with the payload bit set to zero (116 byte login), followed by an RPBC ELS (if the Query Buffer Conditions bit is set), followed by a 256 byte login with the payload bit set to1 (if both the ELS Receive Buffer Field Size field and the Buffer-to-buffer Receive Data_Field Size field are at least 256 bytes.)

#### 12.3.2.49.4 Reply Sequence

**LS_RJT:** LS_RJT signifies rejection of the RPBC command

Copyright International Organization for Standardization
Provided by IHS under license with ISO
No reproduction or networking permitted without license from IHS Not for Resale

**LS_ACC:** LS_ACC signifies acceptance of the RPBC Request and its Accept Payload. The format of the RPBC LS_ACC Payload is shown in table 192.

**Table 192 - RPL LS_ACC Payload**

| Bits / Word | 31 .. 24 | 23 .. 16 | 15 .. 08 | 07 .. 00 |
|---|---|---|---|---|
| 0 | hex ’02’ | Reserved | | |
| 1 | ELS Buffer Parameters | | | |

The ELS Buffer Parameter field contained in byte word 1 of the RPBC LA_ACC Payload relates to the ELS buffer conditions of the sender of the RPBC_ACC ELS and the contents is shown in table 191.

### 12.3.2.50 Report node FC-4 Types (RNFT)

#### 12.3.2.50.1 Description

The RNFT ELS provides for the exchange of supported FC-4 protocol lists. It may be used any time after N_Port Login to verify that the remote Nx_Port supports a given FC-4 protocol.

The RNFT requests a list of the FC-4 protocols supported by the responder, and the RNFT LS_ACC provides the requested list to the source of the of the RNFT.

A specific FC-4 may require that its Nx_Ports support RNFT, and therefore may conclude that a remote Nx_Port that returns LS_RJT with reason code of “Command not supported” does not support that FC-4.

If the recipient Nx_Port is not logged in with the requesting port it shall reply with an LS_RJT ELS Sequence with a reason code of “Unable to perform command request” and a reason code explanation of “N_Port Login required”.

#### 12.3.2.50.2 Protocol

a) Report node FC-4 Types (RNFT) Request sequence
b) LS_ACC or LS_RJT Reply Sequence

#### 12.3.2.50.3 Request Sequence

**Format:** FT_1

**Addressing:** The S_ID field designates the source Nx_Port requesting the FC-4 Types information. The D_ID field designates the destination Nx_Port to which the request is being made.

**Payload:** The format of the request Payload is shown in table 193.

**Table 193 - RNFT Payload**

| Bits / Word | 31 .. 24 | 23 .. 16 | 15 .. 08 | 07 .. 00 |
|---|---|---|---|---|
| 0 | RNFT (hex ’63’) | Reserved | Maximum Size | |
| 1 | Reserved | | | Index |

**a) Maximum Size:** Bytes 2 to 3 of Word 0 contain a 16-bit value that specifies the maximum length of the RNFT LS_ACC that the originator is able to accept. The value zero implies the RNFT LS_ACC may be any size.

Copyright International Organization for Standardization
Provided by IHS under license with ISO
No reproduction or networking permitted without license from IHS Not for Resale

**b) Index:** Byte 3 of Word 1 contains an 8-bit value that specifies the index of the first FC-4 Entry to be returned in the RNFT Reply.

Each FC-4 protocol supported by the responder has an index in the range from zero to (List Length – 1) that should be used to specify a subset of the entries when the entire list shall not fit into one reply. The index of the entry for a particular FC-4 Type may change at any time.

#### 12.3.2.50.4 Reply Sequence

**LS_RJT:** LS_RJT signifies rejection of the RNFT command.

**LS_ACC:** LS_ACC Signifies that the destination Nx_Port has transmitted the requested data. The format of the LS_ACC Payload is shown in table 194.

**Table 194 - RNFT LS_ACC Payload**

| Bits / Word | 31 .. 24 | 23 .. 16 | 15 .. 08 | 07 .. 00 |
|---|---|---|---|---|
| **0** | hex ’02’ | Reserved | Payload Length (M) | |
| **1** | Reserved | List Length | Reserved | Index |
| **2** | FC-4 Entry 1 | | | |
| **..** | | | | |
| **N+1** | FC-4 Entry N | | | |

**a) Payload Length:** Bytes 2 to 3 of Word 0 contain a 16-bit value that specifies the length M of the RNFT LS_ACC Payload in bytes.

M = 8 + N x 4

where

N is the number of FC-4 Entries contained in the Payload.

**b) List Length:** Byte 1 of Word 1 contains an 8-bit value that specifies the total number of FC-4 protocols supported by the responder.

If List Length exceeds Index+N then the originator may request additional records with another RNFT in which Index is increased by N.

**c) Index:** Byte 3 of Word 1 contains an 8-bit value that specifies the index of the first FC-4 Entry returned in the RNFT reply.

**d) FC-4 Entries:** The remainder of the Payload contains a list of N FC-4 Entry records.

**e) FC-4 Entry:** The FC-4 Entry record contains a FC-4 Entry and is shown in table 195.

**Table 195 - RNFT FC-4 Entry**

| Bits / Word | 31 .. 24 | 23 .. 16 | 15 .. 08 | 07 .. 00 |
|---|---|---|---|---|
| **1** | FC-4 Type | FC-4 Qualifier | | |

**f) FC-4 Type:** The FC-4 TYPE code of a FC-4 protocol that is supported by the sending Nx_Port. The values are defined in table 30**.**

Copyright International Organization for Standardization
Provided by IHS under license with ISO
No reproduction or networking permitted without license from IHS Not for Resale

**g) FC-4 Qualifier:** The FC-4 Qualifier may be used to distinguish between two protocols that use the same FC-4 TYPE code.

For FC-4 type codes that are reserved or assigned for specific use in this standard (hex ’00’ to hex ’68’), the value of the FC-4 Qualifier shall be zero.

For Vendor specific FC-4 TYPE codes (hex ’69. Through hex ’FF’), the FC-4 Qualifier shall be selected from one of the 24-bit Company_ID values assigned by the IEEE Registration Authority to the organization that defines the Vendor specific FC-4 protocol, and that Company_ID shall be used to qualify that FC-4 TYPE in all implementations. It is up to the organization that defines the Vendor specific FC-4 protocol to assure that the protocol has a unique qualified FC-4 Type.

### 12.3.2.51 Scan Remote Loop (SRL)

#### 12.3.2.51.1 Description

The SRL ELS shall require a switch to scan attached loops to determine if any L_Ports have been disabled or removed. If the switch determines any L_Ports that are currently logged in with the fabric have been removed or disabled it shall update the name server and send an RSCN to all registered Nx_Ports.

The SRL Payload indicates whether the switch shall scan all attached loops or a single loop. If a single loop is to be scanned the Payload shall contain the FL_Port_ID of the loop to be scanned.

#### 12.3.2.51.2 Protocol

a) Scan Remote Loop Request Sequence
b) LS_ACC or LS_RJT Reply Sequence

#### 12.3.2.51.3 Request Sequence

**Format:** FT_1

**Addressing:** The S_ID field designates the source Nx_Port requesting Scan Remote Loop. The D_ID field designates the destination of the address identifier for the Domain Controller of the switch for which loops are being scanned. The format of the Domain Controller address is hex ’FF FC' || Domain_ID. Domain_ID is the Domain_ID of the switch being queried.

**Payload:** The format of the Payload is shown in table 196.

**Table 196 - SRL Payload**

| Bits / Word | 31 .. 24 | 23 .. 16 | 15 .. 08 | 07 .. 00 |
|---|---|---|---|---|
| **0** | SRL (hex ’7B’) | Reserved | | |
| **1** | Flag | Flag Parameter | | |

Copyright International Organization for Standardization
Provided by IHS under license with ISO
No reproduction or networking permitted without license from IHS Not for Resale

**a) Flag:** Byte 0 of word 1 indicates if the FL_Port shall be scanned, if all FL_Ports within the domain shall be scanned, or the scan period that all FL_Ports within the domain shall be scanned. The meaning of bits 0 to 7 is given in Table 197.

**Table 197 - Flag field definitions**

| Value (hex) | Meaning | Flag Parameter |
|---|---|---|
| 00 | All the FL_Ports within the domain shall be scanned. | Ignored |
| 01 | Only the loop attached to the FL_Port addressed in the address identifier of the FL_Port field shall be scanned. | Address identifier of the FL_Port |
| 02 | Enable periodic scanning for all FL_ports. | Scan period[a] |
| 03 | Disable periodic scanning for all FL_ports. | Ignored |
| All Others | Reserved | |

[a] Scan period in seconds. If the scan period is set to zero the scan period is vendor specific. If the switch does not support this option it shall reject the SRL ELS with a reason code of Periodic Scan Not Supported. If the switch does not support the selected value it shall reject the SRL ELS with a reason code of Periodic Scan Value Not Allowed.

**b) Flag Parameter:** See Table 197.

#### 12.3.2.51.4 Reply Sequence

**LS_RJT:** LS_RJT signifies the rejection of the SRL Request

**LS_ACC:** LS_ACC signifies acceptance of the SRL Request. If the period scanning is enabled then the switch shall return the value of the periodic scanning period in the LS_ACC payloads Scan Period field, If the periodic scanning period is disabled then the switch shall set the LS_ACC payload Scan Period field to zero.

**Table 198 - SRL LS_ACC Payload**

| Bits / Word | 31 .. 24 | 23 .. 16 | 15 .. 08 | 07 .. 00 |
|---|---|---|---|---|
| **0** | hex '02' | Scan Period | | |

### 12.3.2.52 Set Bit-error Reporting Parameters (SBRP)

#### 12.3.2.52.1 Description

Set SBRP ELS shall be used to communicate a set of bit error reporting parameters to a Port or to all Ports in a particular Domain in a Fabric. There are 3 parameters, Error Interval, Error Window, and Bit-error Threshold. Error Interval is the time period over which bit error bursts are integrated to produce a single reported error. An Error Window is composed of one or more Error Intervals. The number of intervals in error occurring in an Error Window are counted and compared to a value derived from the Bit-error Threshold. If the count is equal or greater than derived value, a Registered Link Incident Report (RLIR) is generated with an Incident Code specifying Bit-error-rate threshold exceeded (see 21.2.7). At the end of the Error Window, the count is set to zero and the

Copyright International Organization for Standardization
Provided by IHS under license with ISO
No reproduction or networking permitted without license from IHS Not for Resale

process is repeated. See figure 16 for illustration of the parameters.

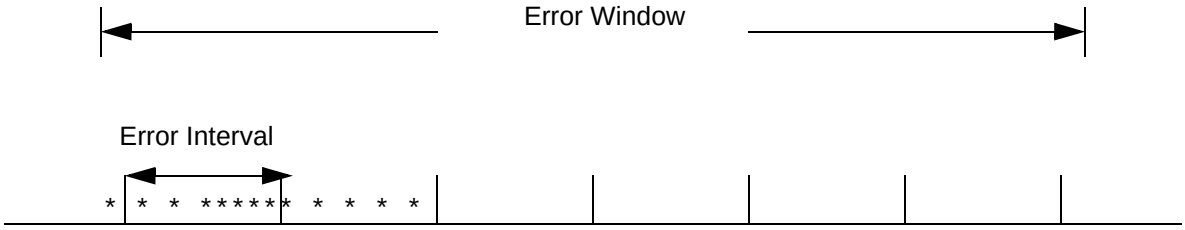


**Figure 16 - Illustration of parameters**

SBRP may be used to determine an acceptable set or the current set of bit error reporting parameters in the destination Port or Domain, without changing the settings.

The setting of parameters in a particular Port or Domain is done by a controlling entity that is out side the scope of this standard.

#### 12.3.2.52.2 Protocol

a) Set Bit-error Reporting Parameters (SBRP) Request Sequence
b) LS_ACC or LS_RJT Reply Sequence

#### 12.3.2.52.3 Request Sequence

**Format:** FT_1

**Addressing:** The S_ID designates the source Nx_Port requesting the bit error rate reporting parameters. The D_ID designates the destination Nx_Port or the Domain Controller (hex 'FF FC' || <Domain_ID>). Domain_ID is the Domain_ID of the recipient switch) to process the SBRP ELS.

**Payload:** The format of the SBRP Payload is shown in table 199.

**Table 199 - SBRP Payload**

| Bits / Word | 31 .. 28 | 27 .. 24 | 23 .. 16 | 15 .. 12 | 11 .. 08 | 07 .. 03 | 02 .. 00 |
|---|---|---|---|---|---|---|---|
| **0** | SBRP (hex '7C') | | hex '00' | hex '00' | | hex '00' | |
| **1** | Reserved | | | | | | Set/ Report/ Default Flag |
| **2** | Error Window exponent | Error Window value | | Error Interval exponent | Error Interval value | | |
| **3** | Error Threshold | | | | | | |

a) Word 1 - Set/Report/Report Default Flags

Copyright International Organization for Standardization
Provided by IHS under license with ISO
No reproduction or networking permitted without license from IHS Not for Resale

**Bit 0 – Set Error Reporting Parameters**: The bit is set to request that the destination set the Error Window, the Error Interval and the Bit-error Threshold parameters. If the destination is the Domain Controller then the request is for the switch to set all ports to the requested values.

**Bit 1 – Report Error Reporting Parameters**: The bit is set to request that the destination return the active parameters, currently being enforced.

**Bit 2 – Report Default Parameters**The bit is set to request that the destination return the default parameters it is capable of enforcing. The default parameters to be used are those specified in 21.2.7 unless SBRP is supported and a SBRP is received.

b) Word 2, Bits 31 to 28, Error Window exponent and Bits 27 to 16, Error Window value

The Error Window is a time duration described by a 16-bit value. Twelve bits, Bits 28 to 16, are used for the base value. Four bits, Bits 31 to 28 are encoded to form the exponent. The product of the base value and the exponent yields the time duration in seconds. The encoded exponent is defined as follows:

hex ’0’ represents $10^{0}$

hex ’1’represents $10^{-1}$

hex ’2’ represents $10^{-2}$

▪

▪

▪

hex ’F’ represents $10^{-15}$

(e.g., a base value of hex ’001’ multiplied by an exponent of hex ’5’ would yield a value of 1 times $10^{-5}$ or 10 µs).

The Error Window has a tolerance of -0 to + 1 maximum Error Interval.

c) Word 2, Bits 15 to 12, Error Interval exponent and Bits 11 to 0, Error Interval value

The Error Interval is a time duration in seconds and has the same, exact definitions for exponent and base value as Error Window. The Error Interval has a tolerance of – 50% to + 50%.

d) Word 3, Bits 31 to 0, Error Threshold

The Error Threshold is the basis for a comparison value. The manner in which it is used shall be a function of the speed at which the Link is operating. The operating speed of the Port, in gigabits per second, shall be rounded to an integer number. The product of the Error Threshold value and the integer number of the speed shall be used in the comparison (e.g., if the Error Threshold is set to ’00000100’ b, at 1 gigabit per second the comparison value would be hex ’00 00 01 00’ or decimal 256; at 10 gigabits per second the comparison value would be hex ’00 00 0A 00’ or decimal 2560).

### 12.3.2.52.4 Reply Sequence

**LS_RJT:** LS_RJT signifies the rejection of the SBRP Request.

**LS_ACC:** LS_ACC signifies acceptance of the SBRP Request and presents SBRP data. The format of the LS_ACC Payload is shown in table 200.

The LS_ACC Payload conveys either:

a) the current Bit Error Rate Reporting Parameters (i.e., the requestor is querying for currently set parameters) or,
b) the accepted Bit Error Rate Reporting Parameters (a request to set the parameters was accepted) or,

Copyright International Organization for Standardization
Provided by IHS under license with ISO
No reproduction or networking permitted without license from IHS Not for Resale

c) acceptable Bit Error Rate Report Parameters (a request to set the parameters was rejected because the parameters requested are not within the range supported by the port or switch).

**Table 200 - SBRP LS_ACC Payload**

| Bits / Word | 31 | 30 .. 28 | 27 .. 24 | 23 .. 16 | 15 .. 12 | 11 .. 08 | 07 .. 00 |
|---|---|---|---|---|---|---|---|
| **0** | hex ’02’ | | | hex ’00’ | hex ’00’ | | hex ’00’ |
| **1** | SBRP Request Accepted | Reserved | | | | | |
| **2** | Error Window exponent | | Error Window value | | Error Interval exponent | Error Interval value | |
| **3** | Error Threshold | | | | | | |

**a) Word 1, Bit 31, SBRP Request Accepted:** When a request to set the reporting parameters is indicated (request Payload word 1 bit 0 is set to one) and the recipient accepts the requested parameters, it shall set the SBRP Request Accepted bit to zero (Accepted) and echo the requested Error Window, Interval and Threshold parameters in words 2 and 3.

When a request to set the reporting parameters is indicated (request Payload word 1 bit 0 is set to one) and the recipient does not accept the parameters as requested it shall set the SBRP Request Accepted bit to one (Rejected) and return in words 2 and 3 those parameters that were acceptable (values unenforceable by the recipient shall be set to zero).

When a request to report the parameters is indicated (request Payload word 1 bit 1 is set to one) the recipient shall set the SBRP Request Accepted bit to zero (Accepted) and report the current Bit Error Rate porting parameters being enforced. If no Bit Error Rate reporting is being enforced, words 2 and 3 shall be set to zero.

When a request to report the default parameters is indicated (request Payload word 1 bit 2 is set) the recipient shall set the SBRP Request Accepted bit to zero (Accepted) return the default Bit Error Rate porting parameters it is capable of enforcing.

### 12.3.2.53 Report Port Speed Capabilities (RPSC)

#### 12.3.2.53.1 Description

The RPSC ELS shall provide a method for a Port to report its current and potential link operating speeds. The normal response to an RPSC ELS Sequence shall be a LS_ACC ELS Sequence. If the recipient Port does not support the RPSC ELS, it shall reply with an LS_RJT ELS Sequence with a reason code of “command not supported”.

#### 12.3.2.53.2 Protocol

a) RPSC Request Sequence
b) LS_ACC or LS_RJT Reply Sequence

#### 12.3.2.53.3 Request Sequence

**Format:** FT_1

**Addressing:** The S_ID designates the source port that is requesting port speeds. The D_ID field designates the recipient that is to process the RPSC request. If the recipient is a Domain Controller, the request is for all the ports within that domain.

--`,,```,,,,````-`-`,,`,,`,`,,`---

Copyright International Organization for Standardization
Provided by IHS under license with ISO
No reproduction or networking permitted without license from IHS Not for Resale

**Payload:** The format of the RPSC Payload is shown in table 201.

**Table 201 - RPSC Payload**

| Bits / Word | 31 .. 24 | 23 .. 16 | 15 .. 08 | 07 .. 00 |
|---|---|---|---|---|
| **0** | RPSC (hex '7D') | hex '00' | hex '00' | hex '00' |

**12.3.2.53.4 Reply Sequence**

**LS_RJT:** LS_RJT signifies the rejection of the RPSC Request

**LS_ACC:** LS_ACC signifies acceptance of the RPSC Request and its Accept Payload. The format of the LS_ACC Payload is shown in table 202.

**Table 202 - RPSC LS_ACC Payload**

| Bits / Word | 31 .. 24 | 23 .. 16 | 15 .. 08 | 07 .. 00 |
|---|---|---|---|---|
| **0** | hex '02' | Reserved | Number of entries | |
| **1** | Port Speed Capabilities (Port 1) | | Port Operating Speed (Port 1) | |
| **2** | Port Speed Capabilities (Port 2) | | Port Operating Speed (Port 2) | |
| **..** | | | | |
| **n** | Port Speed Capabilities (Port n) | | Port Operating Speed (Port n) | |

a) Number of Entries: Specifies the number of Port entries in the Payload.
b) Port Speed Capabilities (bits 31 to 16): Identifies the operating speed capabilities of the port.
   A) Bit 31 – 1 Gb capable
   B) Bit 30 – 2 Gb capable
   C) Bit 29 – 4 Gb capable
   D) Bit 28 – 10 Gb capable
   E) Bits 27 through 17 – reserved
   F) Bit 16 - Unknown
c) Port Operating Speed (bits 15 to 0): Identifies the current operating speed if set.
   A) Bit 15 – 1 Gb Operation
   B) Bit 14 – 2 Gb Operation
   C) Bit 13 – 4 Gb Operation
   D) Bit 12 – 10 Gb Operation
   E) Bits 11 through 2 – reserved
   F) Bit 1 - Unknown
   G) Bit 0 – Speed not established.

**12.3.2.54 Read Exchange Concise (REC)**

**12.3.2.54.1 Description**

This ELS shall be used only for purposes specific to an FC-4. The REC (Read Exchange Concise) Extended Link Service requests an Nx_Port to return Exchange information for the RX_ID and OX_ID originated by the S_ID specified in the Payload of the request Sequence. The S_ID specified in the Payload of the request Sequence may differ from address identifiers of both the source and destination of the REC request itself. The specification of OX_ID and RX_ID shall be provided for the destination Nx_Port to locate the status information requested. A Responder destination Nx_Port shall use the RX_ID and verify that the OX_ID is consistent, unless the RX_ID is unassigned (i.e., RX_ID = hex 'FFFF'). If the RX_ID is unassigned in the request, the Responder shall identify the Exchange by means of the S_ID specified in the Payload of the request Sequence and OX_ID. An Originator

Copyright International Organization for Standardization
Provided by IHS under license with ISO
No reproduction or networking permitted without license from IHS Not for Resale

Nx_Port shall use the OX_ID and verify that the RX_ID is consistent.

If the destination Nx_Port of the REC request determines that the Originator S_ID, OX_ID, or RX_ID are inconsistent, then it shall reply with an LS_RJT Sequence with a reason code of “Unable to perform command request” and a reason code explanation of “Invalid OX_ID-RX_ID combination”.

The value of the Parameter field in the frame header of an REC ELS and an LS_ACC in response to an REC ELS shall be specified by the FC-4 that sends the frame. The Relative offset present bit in the frame header of an REC ELS or an LS_ACC in response to an REC ELS shall be set to zero.

#### 12.3.2.54.2 Protocol

a) Read Exchange Concise (REC) Request Sequence
b) LS_ACC or LS_RJT Reply Sequence

#### 12.3.2.54.3 Request Sequence

**Format:** FT_1

**Addressing:** The S_ID designates the source port that is requesting exchange information. The D_ID field designates the recipient that is requested to provide exchange information.

**Payload:** The format of the REC Payload is shown in table 203.

**Table 203 - REC Payload**

| Bits / Word | 31 .. 24 Byte 0 | 23 .. 16 Byte 1 | 15 .. 08 Byte 2 | 07 .. 00 Byte 3 |
|---|---|---|---|---|
| **0** | REC (hex ’13’) | hex '00' | hex '00' | hex '00' |
| **1** | Reserved | Exchange originator S_ID | | |
| **2** | OX_ID | | RX_ID | |

#### 12.3.2.54.4 Reply Sequence

**LS_RJT**: LS_RJT signifies the rejection of the REC Request

**LS_ACC:** LS_ACC signifies acceptance of the REC Request and returns the requested exchange information. The

Copyright International Organization for Standardization
Provided by IHS under license with ISO
No reproduction or networking permitted without license from IHS Not for Resale

format of the LS_ACC Payload is shown in table 204.

**Table 204 - REC LS_ACC Payload**

| Bits / Word | 31 .. 24 Byte 0 | 23 .. 16 Byte 1 | 15 .. 08 Byte 2 | 07 .. 00 Byte 3 |
|---|---|---|---|---|
| 0 | LS_ACC (hex '02') | hex '00' | hex '00' | hex '00' |
| 1 | OX_ID | | RX_ID | |
| 2 | Reserved | Originator Address Identifier | | |
| 3 | Reserved | Responder Address Identifier | | |
| 4 | FC4VALUE | | | |
| 5 | E_STAT | | | |

The Originator Address Identifier field shall be set to the address identifier of the Originator of the exchange about which information was requested.

The Responder Address Identifier field shall be set the address identifier of the Responder of the exchange about which information was requested.

The value of the FC4VALUE field shall be specified by the FC-4 that sends the LS_ACC to a REC ELS.

E_STAT shall be as defined in 17.8.1 for the E_STAT field in the Exchange Status Block for the exchange about which information was requested. The bits specifying whether the Exchange is complete (Bit 29) and whether the responder holds Sequence Initiative (Bit 30) shall be valid; the setting of other bits may not be valid.

### 12.3.3 Extended Link Service Reply Sequences

#### 12.3.3.1 Overview

An ELS Reply Sequence shall signify that the ELS request Sequence is completed. The reply Sequence may contain data in the Payload following the LS_Command code word. The format and meaning of the Payload is specified in the request ELS definition.

For any ELS response, if the request is carried on a Class 4 circuit, the VC_ID field shall contain the appropriate CIVC_ID or CRVC_ID value.

#### 12.3.3.2 LS_ACC

The Link Service Accept (LS_ACC) ELS reply Sequence shall notify the transmitter of an ELS request that the ELS request Sequence has been completed. The Responder shall terminate the Exchange by setting the Last Sequence bit (Bit 20) in F_CTL on the last Data frame of the reply Sequence. The first byte of the Payload shall contain hex '02'. The remainder of the Payload is unique to the ELS request.

**Format:** FT_1

**Protocol:** LS_ACC is the reply Sequence for several ELSs as indicated in the applicable clause.

**Addressing:** The D_ID field designates the source of the ELS Sequence being accepted while the S_ID field designates the destination of the request Sequence being accepted.

**Payload:** The Payload content following the LS_Command code (hex '02 XX XX XX') is defined within individual

--`,,```,,,,````-`-`,,`,,`,`,,`---

Copyright International Organization for Standardization
Provided by IHS under license with ISO
No reproduction or networking permitted without license from IHS Not for Resale

ELS requests.

#### 12.3.3.3 Reply Sequence

none

#### 12.3.3.4 Link Service Reject (LS_RJT)

##### 12.3.3.4.1 Description

The Link Service Reject (LS_RJT) shall notify the transmitter of a Link Service request that the Link Service request Sequence has been rejected. A four-byte reason code shall be contained in the Data Field. Link Service Reject may be transmitted for a variety of conditions that may be unique to a specific Link Service request (e.g., if the Service Parameters specified in a Login frame were logically inconsistent or in error, a P_RJT frame would not be transmitted in response, but rather a Link Service Reject).

##### 12.3.3.4.2 Payload

**Addressing:** The D_ID field designates the source of the ELS request being rejected while the S_ID field designates the destination of the request Data frame Sequence being rejected.

**Payload:** The first word of the Payload shall contain the LS_Command code (hex '01 00 00 00'). The next four bytes of this field shall indicate the reason for rejecting the request (see figure 17 and tables 205 and 206). The first error condition encountered shall be the error reported.

NOTE The applicable ELSs column in table 206 is not necessarily complete (i.e., A given reply may contain a Reason Code Explanation other than what is indicated for it in the table).

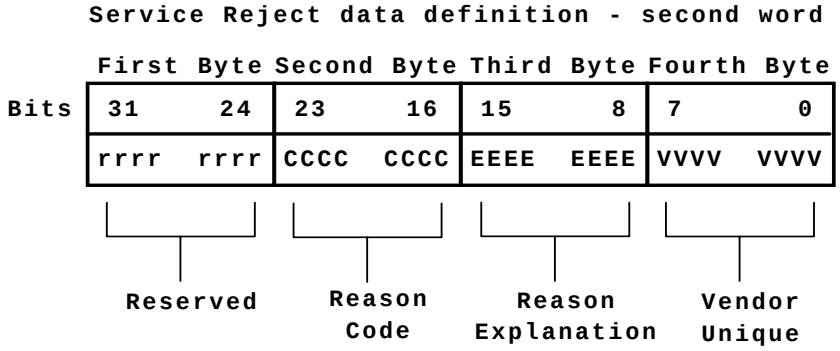


**Figure 17 - LS_RJT format**

Copyright International Organization for Standardization
Provided by IHS under license with ISO
No reproduction or networking permitted without license from IHS Not for Resale

**Table 205 - LS_RJT Reason Codes**

| Encoded Value (Bits 23 to 16) | Description | Explanation |
|---|---|---|
| hex ’01’ | Invalid LS_Command code | The LS_Command code in the Sequence being rejected is invalid. |
| hex '03' | Logical error | The request identified by the LS_Command code and Payload content is invalid or logically inconsistent for the conditions present. |
| hex '05' | Logical busy | The Link Service is logically busy and unable to process the request at this time. |
| hex '07' | Protocol error | This indicates that an error has been detected that violates the rules of the ELS Protocol that are not specified by other error codes. |
| hex '09' | Unable to perform command request | The Recipient of a Link Service command is unable to perform the request at this time. |
| hex '0B' | Command not supported | The Recipient of a Link Service command does not support the command requested. |
| hex ’OE’ | Command already in progress | |
| hex 'FF' | Vendor specific error (See bits 7 to 0) | The Vendor specific error bits may be used by Vendors to specify additional reason codes. |
| Others | Reserved | |

Copyright International Organization for Standardization
Provided by IHS under license with ISO
No reproduction or networking permitted without license from IHS Not for Resale

#### 12.3.3.4.3 Reply Sequence

none

**Table 206 - LS_RJT Reason Code Explanation**

| Encoded Value (Bits 15 to 8) | Description | Applicable ELSs |
|---|---|---|
| hex '00' | No additional explanation | ABTX, ADVC, ESTS, FLOGI, PLOGI, LOGO, RCS, RES, REC, RLS, RSS, RTV, RSI, PRLI, PRLO, TPLS, TPRLO, GAID, FACT, FDACT, NACT, NDACT, QoSR, RVCS, PDISC, FDISC, ADISC, RNC, CSR, RNFT |
| hex '01' | Service Parm error - Options | FLOGI, PLOGI |
| hex '03' | Service Parm error - Initiator Ctl | FLOGI, PLOGI |
| hex '05' | Service Parm error - Recipient Ctl | FLOGI, PLOGI |
| hex '07' | Service Parm error - Rec Data Field Size | FLOGI, PLOGI |
| hex '09' | Service Parm error - Concurrent Seq | FLOGI, PLOGI |
| hex '0B' | Service Parm error - Credit | ADVC, FLOGI, PLOGI |
| hex '0D' | Invalid N_Port/F_Port_Name | FLOGI, PLOGI |
| hex '0E' | Invalid node/Fabric Name | FLOGI, PLOGI |
| hex '0F' | Invalid Common Service Parameters | FLOGI, PLOGI |
| hex '11' | Invalid Association_Header | ABTX, RES, RRQ, RSI |
| hex '13' | Association_Header Required | ABTX, RES, RRQ, RSI |
| hex '15' | Invalid Originator S_ID | ABTX, RES, REC, RRQ, RSI, RSS |
| hex '17' | Invalid OX_ID-RX_ID combination | ABTX, RES, REC, RRQ, RSI, RSS |
| hex '19' | Command (request) already in progress | ABTX, PLOGI, RSI |
| hex '1E' | N_Port Login Required | ABTX, RCS, RES, REC, RSS, RSI, ESTS, ESTC, AVDC, PRLI, PRLO, TPLS, TPRLO, QoSR, RVCS, PDISC, FDISC, ADISC, RNFT, RLIR, LIRR, SRL |
| hex '1F' | Invalid N_Port_ID | RCS, RLS |
| hex '21' | Invalid SEQ_ID | RSS |
| hex '23' | Attempt to abort invalid Exchange | ATBX |
| hex '25' | Attempt to abort inactive Exchange | ABTX |
| hex '27' | Recovery_Qualifier required | ABTX |
| hex '29' | Insufficient resources to support Login | FLOGI, PLOGI |

Copyright International Organization for Standardization
Provided by IHS under license with ISO
No reproduction or networking permitted without license from IHS Not for Resale

**Table 206 - LS_RJT Reason Code Explanation (Continued)**

| Encoded Value (Bits 15 to 8) | Description | Applicable ELSs |
|---|---|---|
| hex '2A' | Unable to supply requested Data | ADVC, ESTS, RCS, RES, RLS, RSS, RTV |
| hex '2C' | Request not supported | ADVC, ESTS, PRLI, PRLO, TPLS, TPRLO, GAID, FACT, FDACT, NACT, NDACT, QoSR, RVCS, PDISC, FDISC, ADISC, RNC, RNFT |
| hex '2D' | Invalid Payload Length | FLOGI, PLOGI |
| hex '30' | No Alias_IDs available for this Alias_ID Type | Get Alias_ID |
| hex '31' | Alias_ID not activated (no resources available) | Fabric Activate Alias ID, N_Port Activate Alias ID |
| hex '32' | Alias_ID not activated (invalid Alias_ID) | Fabric Activate Alias ID, N_Port Activate Alias ID |
| hex '33' | Alias_ID not deactivated (doesn't exist) | Fabric Deactivate Alias ID, N_Port Deactivate Alias ID |
| hex '34' | Alias_ID not deactivated (resource problem) | Fabric Deactivate Alias ID, N_Port Deactivate Alias ID |
| hex '35' | Service Parameter conflict | N_Port Activate Alias ID |
| hex '36' | Invalid Alias_Token | Get Alias_ID |
| hex '37' | Unsupported Alias_Token | N_Port Activate Alias ID |
| hex '38' | Alias Group cannot be formed | Get Alias ID |
| hex '40' | QoS Parm Error | QoSR |
| hex '41' | VC_ID Not Found | QoSR |
| hex '42' | Insufficient Resources to support a Class4 connection | QoSR |
| hex '44' | Invalid Port/Node_Name | LCLM |
| hex '46' | Login Extension not Supported | PLOGI, FLOGI |
| hex '50' | Periodic Scan Value not Allowed | SRL |
| hex '51' | Periodic Scanning not Supported | SRL |
| Others | Reserved | |

## 12.4 FC-4 Link Service

An FC-4 Link Service request solicits a destination Port (Fx_Port or Nx_Port) to perform a function or service in order to support an individual FC-4 Device_Data protocol. The Information Category for a request shall be specified as Unsolicited Control. A FC-4 Link Service reply may be transmitted in answer to a FC-4 Link Service request. The Information Category for a reply shall be specified as Solicited Control. Each request or reply shall be

--`,,```,,,,````-`-`,,`,,`,`,,`---
Copyright International Organization for Standardization
Provided by IHS under license with ISO
No reproduction or networking permitted without license from IHS Not for Resale

composed of a single Sequence. The format of the request or reply shall be specified by the individual FC-4 being supported and is beyond the scope of this standard. Each Sequence may be composed of one or more frames.

The protocols supported by the FC-4 Link Services shall be performed within a single Exchange, intended exclusively for the purpose. FC-4 Link Service protocols are performed using a two Sequence Exchange. The protocols consist of a request Sequence by the Originator (Nx_Port), transfer of Sequence Initiative, and a reply Sequence from the Responder (Nx_Port or Fx_Port). The execution of a FC-4 Link Service may perform sequence abort functions and modify sequence initiative of other exchanges in a protocol specific manner. The Sequence Initiator and Sequence Recipient shall follow the rules for Sequence management and Recovery_Qualifier reuse as specified in clause 17. The following rules regarding Sequence and Exchange management apply to FC-4 Link Services in addition to the rules specified in clause 17:

a) FC-4 Link Services shall only be Exchanges originated following N_Port Login.
b) the Originator of the Exchange shall use the Discard multiple Sequences Exchange Error Policy for all FC-4 Link Service Exchanges.
c) the Originator of an FC-4 Link Service Exchange shall detect an Exchange error following Sequence Initiative transfer if the reply Sequence is not received within a timeout interval equal to twice the value of R_A_TOV.
d) if the Exchange Originator of an FC-4 Link Service Exchange detects an Exchange error, it shall abort the Exchange (ABTX) and retry the protocol of the aborted Exchange with a different Exchange.
e) if the Sequence Initiator aborts a Sequence using ABTS (Abort Sequence Protocol) due to receiving an ACK with the Abort Sequence bits (5 to 4) set to ’01’ b, the Sequence Initiator shall retry the Sequence after the Basic Accept is received for the aborted Sequence one time only.

R_CTL bits 31 to 28 (Word 0) are set = to ’0011’ b to indicate a FC-4 Link_Data frame. The TYPE field for each FC-4 Link Service frame shall match the FC-4 Device_Data TYPE field as specified in table 15.

--`,,```,,,,````-`-`,,`,,`,`,,`---
Copyright International Organization for Standardization
Provided by IHS under license with ISO
No reproduction or networking permitted without license from IHS Not for Resale

# 13 Classes of service

## 13.1 Introduction

Five Classes of service are specified in this standard. These classes of service are distinguished primarily by the methodology with which the communication circuit is allocated and retained between the communicating Nx_Ports and by the level of delivery integrity required for an application.

A given Fabric or Nx_Port may support one or more of the following classes of service:

a) Class 1 - Dedicated Connection
b) Class 2 - Multiplex
c) Class 3 - Datagram
d) Class 4 - Fractional
e) Class 6 - Connected Multicast

Classes 1, 2, and 3 may be supported with any of the three topologies. Classes 4 and 6 shall only be supported with the Fabric topology. Intermix is specified as an option of Class 1 and Class 6 service.

In all classes of service, the FC-2 Segmentation and Reassembly function makes available to the receiving ULP the same image of application data as transmitted by the sending ULP (see clause 19).

In all classes of service, for each frame received, the Fabric shall do one of the following:

a) deliver only one instance of the frame to any single Nx_Port
b) issue a F_BSY (except Class 4)
c) issue a F_RJT
d) discard the frame without issuing any response.

## 13.2 Class 1 - Dedicated connection

### 13.2.1 Function

Class 1 is a service that provides dedicated connections. A Class 1 Connection is opened between a pair of Nx_Ports, by the Nx_Port wishing to initiate the connection sending a frame with a SOFc1 delimiter. An acknowledgement (ACK) is returned by the other Nx_Port to establish the Connection (see clause 20). Once a Connection is established, it shall be retained and guaranteed by the Fabric, until one of participating Nx_Ports requests removal of the Connection. See 7.4 for special conditions in which a Connection may be removed.

NOTE This standard does not specify any method or configuration for establishing a connection between Nx_Ports of different speeds.

A Class 1 Connection is requested by an Nx_Port with another Nx_Port via transmission of a frame containing a $SOF_{c1}$ (Class 1/$SOF_{c1}$). The Fabric, if present, allocates a circuit between the requesting Nx_Port and the destination Nx_Port. The destination Nx_Port transmits an ACK indicating its acceptance to the requesting Nx_Port. Upon successful receipt of the ACK at the requesting Nx_Port, the Connection is established (see 20.4.1). The Fabric retains the allocated circuit between the two Nx_Ports, until one of the Nx_Ports requests the dedicated connection be removed.

Even if a Fabric is not present, the requesting Nx_Port and the destination Nx_Port follow the same protocol.

Class 1 Delimiters as specified in 13.2.3 are used to establish and remove the dedicated connection and to initiate and terminate one or more Sequences within the dedicated connection.

Copyright International Organization for Standardization
Provided by IHS under license with ISO
No reproduction or networking permitted without license from IHS Not for Resale

### 13.2.2 Rules

The following rules apply to exclusive Class 1 Connections. See 13.5 for additional rules applicable to Intermix. To provide a Class 1 Connection, the transmitting and receiving Nx_Ports, and the Fabric shall obey the following rules:

a) Except for some Link Service Protocols (see clause 12) an Nx_Port requesting a Class 1 Connection is required to have previously logged in with the Fabric and the Nx_Ports with which it intends to communicate. To login explicitly, the requesting Nx_Port shall use Fabric and N_Port Login protocols (see clause 15).
b) The Fabric is responsible for establishing a Connection at the request of an Nx_Port and retaining it until one of the communicating Nx_Ports explicitly requests removal of the Connection or one of the links attached to the Nx_Ports participates in a Primitive Sequence protocol (see 7.4). To establish or remove the dedicated connection, the requesting Nx_Port shall use the Class 1 Delimiters as specified in 13.2.3.
c) After transmitting a Class 1/SOF$_{c1}$ frame, the Nx_Port requesting the Connection shall not transmit additional frames to the destination Nx_Port, until it receives from that destination Nx_Port, an ACK that shall establish the Connection.
d) Once a Connection is established between two Nx_Ports, each Nx_Port shall send frames only to the other Nx_Port in the Connection until the Connection is removed. All these frames shall contain respective S_ID and D_ID for these Nx_Ports.
e) A destination Nx_Port shall acknowledge delivery of every valid Data frame with an ACK_1 or the entire Sequence with a single ACK_0.
f) The Sequence Initiator shall increment the SEQ_CNT field of each successive frame transmitted within a Sequence. The Fabric shall guarantee delivery of the frames at the receiver in the same order of transmission within the Sequence (see 17.3.6).
g) Each Nx_Port of an established Connection may originate multiple Exchanges and initiate multiple Sequences within that Connection. The Nx_Port originating an Exchange shall set the OX_ID in accord with 9.11 and the Responder of the Exchange shall set the RX_ID in accord with 9.12. The Sequence Initiator shall assign a SEQ_ID, for each Sequence it initiates in accord with 17.
h) Communicating Nx_Ports shall be responsible for end-to-end flow control, without any Fabric involvement. ACK frames are used to perform end-to-end flow control. All Class 1 frames except Class 1/SOF$_{c1}$, participate only in end to-end flow control. A Class 1/SOF$_{c1}$ frame participates in both end-to-end and buffer-to-buffer flow controls.
i) The Fabric may reject a request for a Class 1 Connection or issue a busy with a valid reason code. After the dedicated connection is established, the Fabric shall not interfere with the Connection. The Fabric shall issue a F_BSY to any Class 2 frame or discard any Class 3 frame, transmitted from a third Nx_Port and destined to one of the Nx_Ports engaged in the Connection (see 11.2.3.2 and 11.2.3.4).
j) The destination Nx_Port specified in Class 1/SOF$_{c1}$ frame may respond with a busy or a reject with a valid reason code to this frame. Once the dedicated connection is established, the destination Nx_Port shall not issue a busy but may issue a reject (see 11.2.3).
k) The Credit established during Login by interchanging service Parameters shall be honored. At the beginning of a Connection, the End-to-end Credit_Count is re initialized to the value determined during Login. Class 1/SOF$_{c1}$ frames shall share the Credit for connectionless service with Class 2 frames and Class 3 frames. All Class 1 frames shall share End-to-end Credit with Class 2 frames (see 18.3).
l) The Fabric shall guarantee full bandwidth availability between the connected Nx_Ports (see 4.5).
m) Frames within a Sequence are tracked on a Sequence_Qualifier and SEQ_CNT basis (see 9.2.1).
n) An Nx_Port or Fx_Port shall be able to recognize SOF delimiters for all classes of service, whether or not the Nx_Port or Fx_Port supports all classes of service, and provide appropriate responses for all classes of service with appropriate delimiters.
   A) if an Nx_Port that supports only Class 1 receives a Class 2 frame, and
      a) is not engaged in a dedicated connection, the Nx_Port shall issue a P_RJT with appropriate Class 2 delimiters and obey buffer-to-buffer flow control rules.
      b) is engaged in a dedicated connection, the Nx_Port response is unpredictable.
   B) If an Nx_Port that supports only Class 1 receives a Class 3 frame, and
      c) is not engaged in a dedicated connection, the Nx_Port shall discard the frame and obey the buffer-to-buffer flow control rules.

Copyright International Organization for Standardization
Provided by IHS under license with ISO
No reproduction or networking permitted without license from IHS Not for Resale

d) is engaged in a dedicated connection, the Nx_Port shall discard the frame and not follow the buffer-to-buffer flow control rules.

C) if an Fx_Port that supports only Class 1 receives a Class 2 frame, and
   e) is not engaged in a dedicated connection, the Fx_Port shall issue a F_RJT with appropriate Class 2 delimiters and obey buffer-to-buffer flow control rules.
   f) is engaged in a dedicated connection, the Fx_Port response is unpredictable.

D) If an Fx_Port that supports only Class 1 receives a Class 3 frame, and
   g) is not engaged in a dedicated connection, the Fx_Port shall discard the frame and obey buffer-to-buffer flow control rules.
   h) is engaged in a dedicated connection, the Fx_Port response is unpredictable.

E) If a Class 4 or Class 6 Frame is received and only Class 1 is supported, see 13.6.8 or 13.7.2, respecively.

o) If an Nx_Port does not support Class 1 and receives a Class 1/$SOF_{c1}$ frame, the Nx_Port shall issue a P_RJT with a $SOF_{n1}$ and $EOF_{dt}$ with a reason code of “Class not supported”. If an Fx_Port does not support Class 1 and receives a Class 1/$SOF_{c1}$ frame, the Fx_Port shall issue a F_RJT with a $SOF_{n1}$ and $EOF_{dt}$ with a reason code of “Class not supported”.

p) If an Fx_Port, not engaged in a dedicated connection, receives a frame with a $SOF_{i1}$ or $SOF_{n1}$, the Fx_Port response is unpredictable. However, the buffer-to-buffer control shall remain unaffected.

### 13.2.3 Delimiters

A dedicated connection is requested by transmitting a Data frame using a $SOF_{c1}$ delimiter. $SOF_{c1}$ initiates the first Sequence; subsequent Sequences are initiated with a $SOF_{i1}$. $SOF_{n1}$ starts all frames other than the first within a sequence.

$EOF_n$ terminates all frames other than the last frame within a Sequence. Each Sequence is terminated using an $EOF_t$. An $EOF_{dt}$ contained in a frame terminates the Sequence in which the frame is sent and it also serves to remove the dedicated connection. Other open Sequences in progress are also terminated. Exchanges and Sequences may be left in indeterminate state from the perspective of ULPs.

### 13.2.4 Frame size

The size of Data_Field of a frame using the $SOF_{c1}$ delimiter is limited by the smaller value of the maximum Data_Field size supported for frames with $SOF_{c1}$ by the Fabric and the destination Nx_Port. Subsequent frames, after a dedicated connection is established, are limited only by the maximum Data Field size supported by the destination Nx_Port.

### 13.2.5 Flow control

ACK frames are used to perform Class 1 end-to-end flow control. ACK frames are started with $SOF_{n1}$. The ACK used to terminate a Sequence shall end with $EOF_t$. The ACK used to terminate the Connection shall end with $EOF_{dt}$. All ACK frames that do not terminate a Sequence, shall end with $EOF_n$.

All Class 1 frames shall follow end-to-end flow control rules (see 18.4.1). The Class 1 $SOF_{c1}$ frame shall follow both end-to-end and buffer-to-buffer flow control rules (see 18.5.2).

### 13.2.6 Stacked connect-requests

Stacked connect-requests is a feature that may be provided by the Fabric (see 20.5.3 and clause 26).

## 13.3 Class 2 - Multiplex

### 13.3.1 Function

This operating environment provides connectionless service with notification of non-delivery between two Nx_Ports. This service allows one Nx_Port to transmit consecutive frames to multiple destinations without

Copyright International Organization for Standardization
Provided by IHS under license with ISO
No reproduction or networking permitted without license from IHS Not for Resale

establishing a dedicated connection with any specific Nx_Port. Conversely, this service also allows one Nx_Port to receive consecutive frames from one or more Nx_Ports without having established dedicated connections with any of them.

A Class 2 service is requested by an Nx_Port on a frame by frame basis. The Fabric, if present, routes the frame to the destination Nx_Port. If the Nx_Port transmits consecutive frames to multiple destinations, the Fabric demultiplexes them to the requested destinations.

Class 2 Delimiters are used to indicate the requested service and to initiate and terminate one or more Sequences as described in 13.2.3. Since Class 2 is connectionless, the question of service removal does not arise.

### 13.3.2 Rules

To provide Class 2 service, the transmitting and receiving Nx_Ports, and the Fabric shall obey the following rules:

a) Except as explicitly stated in for a given Link Service protocol, an Nx_Port supporting Class 2 service is required to have logged in with the Fabric and the Nx_Ports with which it intends to communicate, either explicitly or implicitly. To login explicitly, the requesting Nx_Port shall use Fabric and N_Port Login protocols.
b) The Fabric routes the frames without establishing a dedicated connection between communicating Nx_Ports. To obtain Class 2 service from the Fabric, the Nx_Port shall use the Class 2 Delimiters as specified in 13.3.3.
c) An Nx_Port may send consecutive frames to one or more destinations. This enables an Nx_Port to demultiplex multiple Sequences to a single or multiple destinations concurrently (see 13.3.3).
d) A given Nx_Port may receive consecutive frames from different sources. Each source may send consecutive frames for one or more Sequences.
e) A destination Nx_Port shall provide an acknowledgement to the source for each valid Data frame received. As in Class 1, the destination Nx_Port shall use ACK for the acknowledgement (see 13.3.5). If unable to deliver ACK, the Fabric shall return a F_BSY or F_RJT.
f) The Sequence Initiator shall increment the SEQ_CNT field of each successive frame transmitted within a Sequence. However, the Fabric may not guarantee delivery to the destination in the same order of transmission (see 17.3.6).
g) An Nx_Port may originate multiple Exchanges and initiate multiple Sequences with one or more destination Nx_Ports. The Nx_Port originating an Exchange shall set the OX_ID in accord with 9.11 and the Responder of the Exchange shall set the RX_ID in accord with 9.12. The Sequence Initiator shall assign a SEQ_ID, for each Sequence it initiates in accord with 17.6.2.
h) Each Fx_Port (the local and the remote) exercises buffer-to buffer flow control with the Nx_Port to which it is directly attached. Communicating Nx_Ports performs end-to-end flow control. ACK frames are used to perform end-to-end flow control and R_RDY is used for buffer-to-buffer flow control.
i) If the Fabric is unable to deliver the frame to the destination Nx_Port, the source is notified of each frame not delivered by an F_BSY or F_RJT frame from the Fabric with corresponding D_ID, S_ID, OX_ID, RX_ID, SEQ_ID, and SEQ_CNT. The source is also notified of valid frames busied or rejected by the destination Nx_Port by P_BSY or P_RJT.
j) A busy or reject may be issued by an Fx_Port or the destination Nx_Port with a valid reason code. (see 11.2)
k) If a Class 2 Data frame is busied, the sender shall retransmit the busied frame up to the ability of the sender to retry, including zero.
l) The Credit established during Login by interchanging Service Parameters shall be honored (see 18.3 for more on Credit). Class 2 may share the Credit for connectionless service with Class 3 and Class 1/$SOF_{c1}$ frames.
m) Effective transfer rate between any given Nx_Port pair is dependent upon the number of Nx_Ports a given Nx_Port is demultiplexing to and multiplexing from.
n) Frames within a Sequence are tracked on a Sequence_Qualifier and SEQ_CNT basis (see 9.2.1).
o) An FC_Port shall be able to recognize SOF delimiters for all classes of service, whether or not the FC_Port supports all classes of service, and provide appropriate responses for all classes of service with appropriate delimiters. An Nx_Port that supports only Class 2 shall issue a P_RJT for Class 1 and Class 6 $SOF_{c1}$ frames with appropriate Class 1 delimiters and discard Class 3 frames, while obeying the

Copyright International Organization for Standardization
Provided by IHS under license with ISO
No reproduction or networking permitted without license from IHS Not for Resale

buffer-to-buffer flow control, rules in both cases. An Fx_Port that supports only Class 2 shall issue a F_RJT for Class 1 and Class 6 $SOF_{c1}$ frames with appropriate Class 1 delimiters and discard Class 3 frames, while obeying the buffer-to-buffer flow control, rules in both cases. If a Class 4 or Class 6 frame is received and only Class 2 is supported, see 13.6.8 or 13.7.2, respectively.

p) The Class 2 PREF field is a Class of Service specific use of the CS_CTL field. When PREF is set to zero, the Fabric shall deliver the frame normally. When PREF is set to one, the Fabric may deliver the frame to the destination Nx_Port prior to frames that have PREF set to zero. If the Fabric indicated through login that it guarantees order-of-delivery, the Fabric shall deliver frames with the same PREF value to a destination in the same order received from the source.

### 13.3.3 Delimiters

Sequences are initiated by transmitting a frame started by a $SOF_{i2}$. A $SOF_{n2}$ starts subsequent frames within a Sequence. A Sequence is normally terminated with a frame ended by $EOF_t$. All frames other than the last frame within the Sequence are ended with an $EOF_n$.

### 13.3.4 Frame size

The size of each frame transmitted is limited by the smaller value of the maximum Data Field size supported by the Fabric or by the receiving Nx_Port. Each frame is routed through the Fabric, if present, as a separate entity.

### 13.3.5 Flow control

Class 2 service uses both buffer-to-buffer and end-to-end flow controls. R_RDY is used for buffer-to-buffer flow control. R_RDY is transmitted by the Fx_Port to the Nx_Port originating the Class 2 frame to indicate that a buffer is available for further frame reception at the Fx_Port. R_RDY is transmitted by the destination Nx_Port to the attached Fx_Port to indicate that a buffer is available for further frame reception at the destination Nx_Port.

ACK frames are used to perform end-to-end flow control. ACK frames shall begin with $SOF_{n2}$. The ACK used to terminate a Sequence shall end with $EOF_t$. All ACK frames that do not terminate a Sequence shall end with $EOF_n$.

All Class 2 frames shall follow both buffer-to-buffer and end-to-end flow control rules (see 18.5.2).

## 13.4 Class 3 - Datagram

### 13.4.1 Function

This operating environment provides connectionless service without any notification of non-delivery (BSY or RJT), delivery (ACK), or end-to-end flow control between two communicating Nx_Ports. The Fabric, if present, and the destination Nx_Port are allowed to discard Class 3 frames without any notification to the transmitting Nx_Port. This service allows one Nx_Port to transmit consecutive frames to multiple destinations without establishing a dedicated connection with any specific Nx_Port. Conversely, this service also allows one Nx_Port to receive consecutive frames from one or more Nx_Ports without having established dedicated connections with any of them.

A Class 3 service is requested by an Nx_Port on a frame by frame basis. The Fabric, if present, routes the frame to the destination Nx_Port. If the Nx_Port transmits consecutive frames to multiple destinations, the Fabric demultiplexes them to the requested destinations.

Class 3 Delimiters are used to indicate the requested service and to initiate and terminate one or more Sequences as described in 13.4.3 Since Class 3 is connectionless, the question of service removal does not arise.

Copyright International Organization for Standardization
Provided by IHS under license with ISO
No reproduction or networking permitted without license from IHS Not for Resale

### 13.4.2 Rules

To provide Class 3 service, the transmitting and receiving Nx_Ports, and the Fabric shall obey the following rules:

a) Except as explicitly stated in for a given Link Service protocol, an Nx_Port supporting Class 3 service is required to have logged in with the Fabric or the Nx_Ports, either explicitly or implicitly. To login explicitly, the requesting Nx_Port shall use Fabric and N_Port Login protocols (see clause 15).
b) The Fabric routes the frames without establishing a dedicated connection between communicating Nx_Ports. To obtain Class 3 service from the Fabric, the Nx_Port shall use the Class 3 Delimiters as specified in the Class 3 Datagram Rules (see clause 13.4.3).
c) A given Nx_Port may send consecutive frames to one or more destinations. This enables an Nx_Port to demultiplex multiple Sequences to single or multiple destinations concurrently.
d) A given Nx_Port may receive consecutive frames from one or more source Nx_Ports. Each source Nx_Port may send consecutive frames for one or more Sequences.
e) A destination Nx_Port shall not provide acknowledgement (ACK) to the source for any valid frame received.
f) The Sequence Initiator shall increment the SEQ_CNT field of each successive frame transmitted within a Sequence. However, the Fabric may not guarantee delivery at the receiver in the same order of transmission (see 17.3.6).
g) An Nx_Port may originate Exchanges and initiate Sequences with one or more destination Nx_Ports. The Nx_Port originating an Exchange shall set the OX_ID in accord with 9.11 and the Responder of the Exchange shall set the RX_ID in accord with 9.12. The Responder may assign an RX_ID in the first Sequence it transmits. The Sequence Initiator shall assign a SEQ_ID for each Sequence it initiates in accord with 17.6.2.
h) The local Fx_Port exercises buffer-to-buffer flow control with the transmitting Nx_Port. The remote Fx_Port exercises buffer to-buffer flow control with the receiving Nx_Port. R_RDY is used for buffer-to-buffer flow control.
i) If the Fabric is unable to deliver the frame to the destination Nx_Port, the frame is discarded and the source is not notified. If the destination Nx_Port is unable to receive the frame, the frame is discarded and the source is not notified.
j) The buffer-to-buffer Credit is used for buffer-to-buffer flow control. End-to-end Credit is not used (see 18.3). Class 3 may share the Credit for connectionless service with Class 2 and Class 1/SOF$_{c1}$ frames.
k) Effective transfer rate between any given Nx_Port pair is dependent upon the number of Nx_Ports a given Nx_Port is demultiplexing to and multiplexing from.
l) Neither the Fx_Port nor Nx_Port shall issue busy or reject to Class 3 frames.
m) Frames within a Sequence are tracked on a Sequence_Qualifier and SEQ_CNT basis (see 9.2.1).
n) An Nx_Port or Fx_Port shall be able to recognize SOF delimiters of all classes of service, whether or not the Nx_Port or Fx_Port supports all classes of service, and provide appropriate responses for all classes of service with appropriate delimiters. An Nx_Port that supports only Class 3, shall issue a P_RJT for Class 1 and Class 6 SOF$_{c1}$ frames or Class 2 frames with appropriate Class 1, Class 6, or Class 2 delimiters respectively while obeying the buffer-to-buffer flow control rules. An Fx_Port that supports only Class 3 shall issue a F_RJT for Class 1 and Class 6 SOF$_{c1}$ frames or Class 2 frames with appropriate Class 1, Class 6, or Class 2 delimiters respectively, while obeying the buffer-to-buffer flow control rules. If a Class 4 or Class 6 frame is received and only Class 3 is supported, see 13.6.8 or 13.7.2, respectively.
o) An Nx_Port may obtain the delivery status of Class 3 Sequences transferred by using Abort Sequence protocol (see 21.7.2.2) and thus verify the integrity of the delivered Sequences.
p) The Class 3 PREF field is a class specific use of the CS_CTL field. When PREF is set to zero, the Fabric shall deliver the frame normally. When PREF is set to one, the Fabric may deliver the frame to the destination Nx_Port prior to frames that have PREF set to zero. If the Fabric indicated through login that it guarantees order-of-delivery, the Fabric shall deliver frames with the same PREF value to a destination in the same order received from the source.

### 13.4.3 Delimiters

Sequences are initiated by transmitting a frame started by a SOF$_{i3}$. A SOF$_{n3}$ starts subsequent frames within a Sequence. A Sequence is terminated with a Data frame ended by EOF$_t$. An EOF$_n$ terminates all frames other than the last frame within the Sequence.

Copyright International Organization for Standardization
Provided by IHS under license with ISO
No reproduction or networking permitted without license from IHS Not for Resale

### 13.4.4 Frame size

The size of each frame transmitted is limited by the smaller value of the maximum Data Field size supported by the Fabric and by the receiving Nx_Port. Each frame is routed through the Fabric, if present, as a separate entity.

### 13.4.5 Flow control

Class 3 uses only buffer-to-buffer flow control with R_RDY. End-to-end flow control is not supported.

All Class 3 frames shall follow buffer-to-buffer flow control rules (see 18.5.2).

### 13.4.6 Sequence integrity

With a missing Class 3 Data frame, the Sequence Recipient is capable of detecting the error of non-receipt of the frame, but has no method to communicate it to the Sequence Initiator due to absence of ACK in Class 3. However, using Abort Sequence protocol (see 17.3.11 and 21.7), the Sequence Initiator may verify if one or more transmitted Sequences were received without any Sequence error. This usage of Abort Sequence protocol makes it possible to verify the integrity of Class 3 Sequences delivered.

If a sending ULP relies on the receiving ULP for ensuring Sequence integrity, the Sequence Initiator may not use the Abort Sequence protocol to confirm Sequence delivery.

## 13.5 Intermix

### 13.5.1 Introduction

Intermix is an option of Class 1 and Class 6 services that allows interleaving of Class 2 and Class 3 frames during an established Class 1 Connection (Class 6 uses a Class 1 Connection) between two N_Ports. During a Class 1 Connection, an N_Port capable of Intermix may transmit and receive Class 2 and Class 3 frames interleaved with Class 1 frames. Class 2 and Class 3 frames may be interchanged with either the N_Port at the other end of the Connection or with any other N_Port. An N_Port that supports Intermix shall be capable of both transmitting and receiving intermixed frames.

In a point-to-point topology, both interconnected N_Ports shall be required to support Intermix if Intermix is to be used. In the presence of a Fabric, both the N_Port and the Fabric shall be required to support Intermix if Intermix is to be used in that link. Fabric support for Intermix requires that the full Class 1 bandwidth during a dedicated connection be maintained.

NOTE Intermix permits the potentially unused Class 1 bandwidth to be available for transmission of Class 2 and Class 3 frames.

The Fabric shall provide adequate buffering for an incoming Class 1 frame while a Class 2 or Class 3 frame is being transmitted during a Class 1 Connection. The extent of buffering needed is dependent on which of the following is used to manage the Class 2 or Class 3 frame that is in transit:

a) to successfully complete a Class 2 or 3 frame in transit, an incoming Class 1 frame shall be buffered to the extent of the maximum Class 2 or Class 3 frame size, or
b) if a Class 2 or Class 3 frame is being aborted (EOFa) on receipt of a Class 1 frame, the Class 1 frame shall be buffered to the extent of the time required to append an EOFa to the Class 2 or 3 frame in transit.

### 13.5.2 Rules

An N_Port pair shall have a Class 1 Connection established for Intermix rules to be applicable to them. To provide

Copyright International Organization for Standardization
Provided by IHS under license with ISO
No reproduction or networking permitted without license from IHS Not for Resale

an Intermix service, the Fabric and the receiving and transmitting N_Ports shall obey the following rules:

a) The Fabric or an N_Port shall provide the Intermix Service Parameter during Login to indicate its Intermix capability to the communicating Port.
b) If the Fabric supports Intermix, an N_Port supporting Intermix may transmit Class 2 and Class 3 frames during a Class 1 Connection intermixed with Class 1 frames of that Connection. If the Fabric does not support Intermix, the N_Port shall not transmit intermixed frames. If the N_Port transmits intermixed frames, delivery of these frames is unpredictable.
c) An attached N_Port supporting Intermix shall be capable of receiving Class 2 and Class 3 frames during Class 1 Connection intermixed with Class 1 frames of that Connection, provided the Fabric supports Intermix.
d) If the Fabric that supports Intermix receives a Class 2 or Class 3 frame destined to an N_Port engaged in a dedicated connection, and the destination N_Port does not support Intermix, the Fabric shall return F_BSY to the Class 2 frame after ensuring that the frame is not deliverable. The Fabric shall discard the Class 3 frame without any response to the sender.
e) If the Fabric that does not support Intermix receives a Class 2 or Class 3 frame from a third N_Port destined to an N_Port engaged in a dedicated connection, regardless of whether the destination N_Port supports Intermix or not, the Fabric shall return F_BSY to the source of the Class 2 frame after determining that the frame is not deliverable. The Fabric shall discard the Class 3 frame without any response to the sender.
f) If an N_Port attached to the Fabric that does not support Intermix transmits intermixed frames in violation of rule b, the delivery of these intermixed frames is unpredictable.
g) The Fabric shall guarantee full Class 1 bandwidth during a dedicated connection. Class 2 and Class 3 frames shall flow on the potentially unused Class 1 bandwidth.
h) Class 1 frames have priority over Class 2 and Class 3 frames. Class 2 and Class 3 frames may be inter-mixed only when there is no backlog of Class 1 frames. The Fabric may issue F_BSY to a Class 2 frame. And discard a Class 3 frame. The Fabric may abort (EOFa) a Class 2 or Class 3 frame in progress if its transmission interferes with the transmission of a Class 1 frame.
i) The Fabric may cause a delay and displace a Class 1 frame in time due to Intermix. This delay is limited to the maximum Class 2 or 3 frame size. The Fabric shall provide adequate buffering for the incoming Class 1 frame while a Class 2 or a Class 3 frame is in transit and guarantee the integrity and delivery of Class 1 frames.
j) In a point-to-point topology, an N_Port that supports Intermix may transmit and receive Class 2 and Class 3 frames during Class 1 Connection intermixed with Class 1 frames if the other N_Port supports Intermix.

### 13.5.3 Frame size

The size of each Class 1, Class 2, or Class 3 frame is governed by the limitations of each class individually. Intermix does not impose any additional limitation on the frame size.

### 13.5.4 Flow control

The flow control for each class is governed separately by individual class. Intermix does not impose any additional rules on flow control.

## 13.6 Class 4 - Fractional

### 13.6.1 Function

Class 4 (see clause 25) is a connection-oriented service that allows circuits to be established between communicating N_Ports. A Class 4 circuit is bi-directional and consists of two unidirectional Virtual Circuits (VC) established between two N_Ports. Each VC is established according to unique Quality of Service (QoS) parameters that include guaranteed bandwidth and latency. A QoS facilitator (QoSF) function provided by the Fabric assists in the establishment, maintenance, and management of VCs and their associated resources.

--`,,```,,,,````-`-`,,`,,`,`,,`---

Copyright International Organization for Standardization
Provided by IHS under license with ISO
No reproduction or networking permitted without license from IHS Not for Resale

### 13.6.2 Procedures

The following procedures specify the behavior for the various phases of a Class 4 circuit.

The flow chart in figure 18 outlines the procedures involved in Class 4 circuit management.

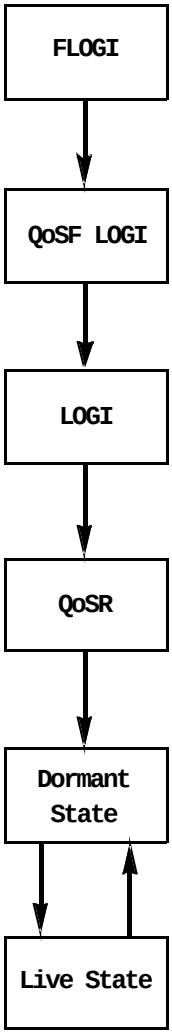


**Figure 18 - Class 4 circuit – Management**

a) FLOGI - Each N_Port shall perform Fabric login indicating support for Class 4.
b) Each N_Port shall perform N_Port Login with the QoSF.
c) PLOGI - Each N_Port shall perform N_Port Login with each N_Port for which it intends to establish a Class 4 circuit indicating support for Class 4.
d) One of the communicating N_Ports shall start the QoSR link service request with the QoSF. When successful, the Class 4 circuit is placed in the Dormant State (see 25.3.5).
e) From the Dormant State, the Class 4 circuit may be activated or reactivated to the Live State by a frame with a circuit activation request between the communicating N_Ports (see 25.3.5.3). The Class 4 circuit may also be removed by the Fabric (see 25.3.5.5).

Copyright International Organization for Standardization
Provided by IHS under license with ISO
No reproduction or networking permitted without license from IHS Not for Resale

f) While in the Live State, normal interaction between the communicating N_Ports takes place across the Class 4 circuit, moderated by the Fabric.
g) When data transfers are complete or are to be suspended, the Class 4 circuit may be moved back to the Dormant State (see 25.3.5.4).

### 13.6.3 Login

Before any operations may begin in Class 4, the potential communicating N_Ports shall support Class 4. Their attempt to login with the Fabric provides an indication to the Fabric of their capability to support Class 4 operation and of the Fabric to support Class 4 operation.

If Fabric login ends successfully with Class 4 available to both N_Ports and the Fabric, the N_Ports shall then perform N_Port Login with each other. N_Ports shall Login with the QoSF prior to any QoSR by the N_Port.

### 13.6.4 Circuit Setup

An N_Port requests setup of a Class 4 circuit to another N_Port by sending a Quality of Service request (QoSR) ELS command to the QoSF. The requesting N_Port becomes the circuit initiator (CTI) and the target N_Port the circuit recipient (CTR). The QoSR identifies the communicating N_Ports and the required QoS parameters.

The QoSR is granted if the QoSF establishes a path between the communicating N_Ports with the requested QoS parameters and if the CTR also accepts the QoS parameters. If the QoSR is accepted then a Class 4 circuit is established in the Pending State (see 25.3.5) when the LS_ACC Sequence is returned to the CTI.

The QoSR is rejected if the QoSF is unable to establish a path between the communicating N_Ports with the requested QoS parameters. The CTR is never queried if the QoSF is unable to establish a path between the communicating N_Ports.

The QoSR is rejected if the QoSF is able to establish a path between the communicating N_Ports with the requested QoS parameters but the CTR is unable to accept the QoSR.

### 13.6.5 Circuit Activation

A Class 4 circuit activation request is used to activate the two VCs for the Class 4 circuit after which Class 4 frames may be transmitted between the communicating N_Ports. Either N_Port may activate the Class 4 circuit. Once activated, the Class 4 circuit may be deactivated with a deactivation request or removed entirely with a removal request by either of the communicating N_Ports.

A Class 4 circuit in the Dormant State is activated and enters the Live State when a $SOF_{c4}$ delimited frame is sent or received.

While in the Live State, the Fabric monitors bandwidth utilization, and frame transmission is regulated by the Fabric. Once the Class 4 circuit activation frame has been transmitted Class 4 frame flow is possible, only limited by available EE_C4_Credit and VC_Credit.

The Fabric manages buffer-to-buffer flow control and the Fabric regulates frame transmission from each source N_Port. The Fabric regulates each VC independently with the Virtual Circuit Ready (VC_RDY) Primitive Signal. Fabric flow control is accomplished using the VC_RDY Primitive Signal for each Live Class 4 circuit.

Class 4 end-to-end flow control is managed by the communicating N_Ports using ACK frames.

### 13.6.6 Circuit Deactivation

A Class 4 circuit, in the Live State, is deactivated, and enters the Dormant State, when an $EOF_{dt}$ or $EOF_{dti}$ delimited frame is sent or received. A deactivated Class 4 circuit may later be reactivated to the Live State.

The Fabric shall issue two END Link_Control commands, one on either VC, when the QoSF determines for any

Copyright International Organization for Standardization
Provided by IHS under license with ISO
No reproduction or networking permitted without license from IHS Not for Resale

reason that a Class 4 circuit should be deactivated. The Fabric shall use the addresses of the communicating N_Ports, as the S_ID and D_ID, in the generated END Link_Control commands, and the VC_ID shall match with the S_ID field. The END Link_Control command frame delimiters shall be $EOF_{dt}$ and $SOF_{n4}$. The Fabric shall use this mechanism to deactivate Class 4 circuits when the N_Port or Fx_Port enters the Link Reset State.

When a Class 4 circuit is deactivated, an N_Port shall reclaim all EE_C4_Credit when the N_Port enters the Dormant State (i.e., set EE_C4_Credit equal to EE_C4_Credit_Limit when using the count down model for credit management).

### 13.6.7 Circuit Removal

The request to remove a Live Class 4 circuit may be sent by either of the communicating N_Ports.

A Class 4 circuit, in the Live or Dormant State, is removed, and enters the Nonexistent State, when an $EOF_{rt}$ or $EOF_{rti}$ delimited frame is received.

The two N_Ports shall not reactivate the Class 4 circuit when the Class 4 circuit has been removed. However, the VC_IDs associated with the removed Class 4 circuit (CIVC_ID and CRVC_ID) may be reused. The QoSF shall return any resources it has allocated to a common pool for use by other Live Class 4 circuits or other classes of service when the Class 4 circuit has been removed.

If required for any reason, the Fabric may remove a Class 4 circuit from either the Live State or the Dormant State. To achieve this the Fabric shall issue two END Link_Control commands, one on either VC. The Fabric shall use the addresses of the communicating N_Ports, as the S_ID and D_ID, in the generated END Link_Control commands, and the VC_ID shall match with the S_ID field. The END Link_Control command frame delimiters shall be $EOF_{rt}$ and $SOF_{n4}$. If the Class 4 circuit is alive, then the Fabric shall first deactivate the Class 4 circuit before removing the circuit.

### 13.6.8 Rules

To provide a Class 4 circuit, the transmitting and receiving N_Ports and the Fabric, shall obey the following rules:

a) Except for some Link Service protocols an N_Port shall have performed Fabric Login and N_Port Login with the ports it intends to communicate with, either explicitly or implicitly. To login explicitly, the requesting N_Port shall use the Fabric and N_Port Login protocols.
b) The Fabric shall be responsible for Class 4 circuit setup. The Fabric shall retain the setup Class 4 circuit until one of the communicating N_Ports in the Class 4 circuit requests removal of the Class 4 circuit unless one of the permitted Fabric exceptions occur. Permitted Fabric exceptions include: path failure and Fabric Login.
c) To activate a Class 4 circuit, the requesting N_Port shall use the Class 4 delimiters as specified in 25.5 An N_Port shall only send a $SOF_{c4}$ delimited frame on a Class 4 circuit in the Dormant State.
d) To deactivate a Class 4 circuit, the requesting N_Port shall use the Class 4 delimiters as specified in 25.5 The Class 4 circuit may be re-activated at a later time by using the procedure in 25.3.5.3.
e) To remove a Class 4 circuit, the requesting N_Port shall use the Class 4 delimiters as specified in 25.5.
f) A destination N_Port shall acknowledge delivery of each valid Data frame.
g) The Sequence Initiator shall increment the SEQ_CNT field on each successive frame transmitted within a Sequence. The Fabric shall guarantee delivery of the frames at the destination N_Port in the order of transmission by the source N_Port.
h) Each N_Port of a Live Class 4 circuit may originate multiple Exchanges and initiate multiple Sequences with one or more N_Ports. The Nx_Port originating an Exchange shall set the OX_ID in accord with 9.11 and the Responder of the Exchange shall set the RX_ID in accord with 9.12. The Sequence Initiator shall assign a SEQ_ID, for each Sequence it initiates in accord with 17.6.2.
i) Communicating N_Ports shall be responsible to manage end-to-end flow control without any Fabric involvement. ACK frames shall be used to perform end-to-end flow control. All Class 4 frames, except for the END Link_Control command, shall participate in end-to-end flow control.
j) The Fabric shall be responsible to regulate the rate at which an N_Port transmits frames. It does so by transmitting the VC_RDY Primitive Signal to an N_Port to request that frames be transmitted. Each

--`,,```,,,,````-`-`,,`,,`,`,,`---

Copyright International Organization for Standardization
Provided by IHS under license with ISO
No reproduction or networking permitted without license from IHS Not for Resale

VC_RDY shall identify the VC for which a frame is being requested. The Fabric shall measure the QoS for bandwidth by measuring all Transmission Words associated with the VC (SOF delimiters, EOF delimiters, and frame content).

k) The Fabric may reject a request to activate a Class 4 circuit with a valid reason code. Once the Class 4 circuit is alive the QoSF shall only interfere with a VC to the extent that it supplies the VC_RDY Primitive Signals in a timely manner.
l) The Fabric shall respond with an F_BSY Link_Response frame to any received Class 1 connect-request frame (i.e., a $SOF_{c1}$ delimited frame) if one or more Class 4 circuits are setup with the destination N_Port frame.
m) The destination N_Port for a request to establish a VC may respond with a P_RJT with an appropriate reason code.
n) An N_Port shall not respond with a P_BSY for any Class 4 frame received.
o) The EE_C4_Credit, determined during the circuit setup process shall be honored.
p) The Fabric shall guarantee that it provides VC_RDY Primitive Signals to the communicating N_Ports at the correct rate and time intervals to meet or exceed the QoS parameters guaranteed for each VC. The latency guarantee relates only to the frame transit within the Fabric.
q) An N_Port shall only transmit Class 4 frames if available VC_Credit permits (see 13.6.13).
r) N_Ports shall discard all Class 4 frames received on a Nonexisting Class 4 circuit, or if the Class 4 circuit is in the Pending State (see 25.3.5).
s) The N_Port shall discard all $SOF_{i4}$ and $SOF_{n4}$ delimited frames received on a Class 4 circuit in the Dormant State (see 25.3.5).
t) An Fx_Port shall discard all $SOF_{i4}$ and $SOF_{n4}$ delimited frames received unless the Class 4 circuit is in the Live State (see 25.3.5).
u) EE_C4_Credit shall remain unaffected by any discarded Class 4 frames.
v) If VC_Credit is equal to zero for a time of more than E_D_TOV the N_Port may use the RVCS protocol to read the state of the Class 4 circuit or the N_Port shall perform the Online-to-Offline protocol. If the N_Port obtains the Class 4 circuit state from the LS_ACC to the RVCS request and it shows that the Class 4 circuit is Nonexisting, the N_Port shall set the circuit State to Nonexisting.
w) Frames within a Sequence are tracked on a Sequence_Qualifier and SEQ_CNT basis.
x) If an N_Port, not supporting Class 4, receives a Class 4 circuit activation frame, the N_Port may return a P_RJT frame with a reason code of “Class not supported”, or the N_Port may discard the Class 4 frame. If an Fx_Port, not supporting Class 4, receives a Class 4 circuit activation frame, the Fx_Port may return a F_RJT response frame with a reason code of “Class not supported”.
y) The Fabric shall use the VC_ID from the frame header for routing frames to a destination N_Port (D_ID). The QoSF maintains a translation from S_ID || VC_ID to D_ID from the original QoSR transaction. Prior to routing a frame, if there is a mismatch on S_ID || VC_ID and D_ID, the frame shall be discarded by the Fabric.
z) An N_Port supporting Class 4 shall not send Class 1 frames nor attempt to establish a Class 1 dedicated connection while a Class 4 circuit exists with the N_Port or while a request to setup a Class 4 circuit has been made by the N_Port.

### 13.6.9 Interleaving other classes of service in Class 4

N_Ports may interleave Class 2 or Class 3 frames on the outbound fibre while a Class 4 circuit exists. The same N_Port may receive Class 2 or Class 3 frames on the inbound fibre while a Class 4 circuit exists.

Transmission of Class 4 frames shall have priority over Class 2 and 3, but a Class 2 or Class 3 frame shall not be aborted to send a Class 4 frame.

During Class 4 operation, Class 2 and Class 3 frames use R_RDY flow control, and Class 4 frames use VC_RDY flow control.

### 13.6.10 Class 4 delimiters

A Class 4 circuit in the Dormant State is activated to Live State by using a $SOF_{c4}$ delimiter for the first frame of a Sequence.

The frames that initiate a Sequence while the Class 4 circuit is in the Live State shall begin with a SOFi4 delimiter.

All other frames for a Class 4 circuit in the Live State shall begin with a SOFn4 delimiter.

All frames other than the last frame of a Sequence shall be terminated with an EOFn delimiter.

Each Sequence other than a Sequence that deactivates or removes a Class 4 circuit shall terminate with an EOFt delimiter.

The EOFni delimiter shall be used by the Fabric to replace either an EOFn or an EOFt on frames for which the Fabric detects a frame error.

The EOFa delimiter shall be used to terminate a partial frame due to a malfunction during transmission. It is also used by the Fabric to replace missing EOF delimiters or to truncate overlength frames.

The EOFdt delimiter shall deactivate the Class 4 circuit.

The EOFdti delimiter shall replace a recognized EOFdt delimiter on a frame with invalid frame content.

The EOFrt delimiter shall remove the Class 4 circuit.

The EOFrti delimiter shall replace a recognized EOFrt delimiter on a frame with invalid frame content.

### 13.6.11 Frame size

The maximum frame size used for all frames for a Class 4 circuit shall be the VC Data Field size decided during the QoSR ELS request.

The Fabric may discard or truncate any Class 4 frames exceeding the Data Field Size limit. If the Fabric truncates a Class 4 frame it shall be terminated with an EOFa delimiter.

### 13.6.12 End-to-end flow control

ACK frames shall be used to perform Class 4 end-to-end flow control. All Class 4 frames shall participate in end-to-end flow control.

NOTE End-to-end flow control is the only mechanism available for flow control by an N_Ports receiver. A small EE_C4_Credit value helps to decrease peak demands.

### 13.6.13 Buffer-to-buffer flow control

Summary rules for VC credit management:

a) N_Ports shall track available credit independently for each VC.
b) Maximum available credit (VC_Credit) on a VC shall be limited to a value of less than 256 (VC_Credit_Limit < 256).
c) An N_Port shall not transmit any Class 4 frames on a given VC unless VC_Credit is available for the VC.
d) One credit shall be consumed for every Class 4 frame transmitted on a VC (VC_Credit ⇐ VC_Credit - 1).
e) Credit shall be regained when a VC_RDY is received for a given VC (VC_Credit ⇐ VC_Credit + 1 if VC_Credit < VC_Credit_Limit)

NOTE 1 Limiting available credit allows the Fabric to generate more VC_RDYs than the number of frames transmitted allowing unused bandwidth to be used by other VCs or for other classes of service.

The state of a VC shall be the same as the Class 4 circuit state for that VC. The maximum available credit

Copyright International Organization for Standardization
Provided by IHS under license with ISO
No reproduction or networking permitted without license from IHS Not for Resale

(VC_Credit) shall be limited as follows:

a) For the CTR, to the value of the Live VC credit limit field in the QoSR, if the VC is alive.
b) For the CTI, to the value of the Live VC credit limit field in the LS_ACC frame to the QoSR, if the VC is alive.
c) Maximum available credit shall be zero for nonexisting VC or VCs in the Pending State (VC_Credit_Limit = 0).

NOTE 2 The CTI and the CTR start with an available VC_Credit of 0 when a new VC is setup.

d) Maximum available credit shall be one for VCs in the Dormant State (VC_Credit_Limit = 1).
e) Maximum available credit shall be set to the Live_VC_Credit_Limit for VCs in the Live State.
f) Available VC_Credit shall be zero after Link Reset (VC_Credit ⇐ 0).

If the N_Port has a frame ready to transmit and EE_C4_Credit available when a VC_RDY is received for a VC, the N_Port transmits the frame at the next opportunity to transmit an outbound frame. The N_Port may be in the middle of transmitting a frame when a VC_RDY is received.

The N_Port shall not accumulate a VC_RDY buffer-to-buffer credit that exceeds the allotted limit. The N_Port shall not use a count in excess of the preset limit to send several frames.

Receipt of a VC_RDY is a guarantee by the Fabric that bandwidth is available to transmit a frame for the identified VC.

The rate at which the Fabric provides VC_RDYs to an N_Port should be used to provide congestion control for the Fabric by keeping unwanted frames in the N_Ports until the fabric is able to meet the QoS parameters.

## 13.7 Class 6 - Connected Multicast

### 13.7.1 Function

Class 6 is a service that provides dedicated connections for Reliable multicast (see 23.3) for a Fabric topology. An N_Port for one or more destination N_Ports requests a Class 6 connection. An acknowledgment is returned by the destination N_Ports to a multicast server that returns an acknowledge to the Connection Initiator, establishing a reliable multicast connection. In general, once a connection is established, it shall be retained and guaranteed by the Fabric until the Connection Initiator requests removal.

A Class 6 connection is requested by an N_Port to one or more destination N_Ports via transmission of a frame containing a $SOF_{c1}$. A Class 6 $SOF_{c1}$ is identical to a Class 1 $SOF_{c1}$. The Fabric recognizes the multicast D_ID and establishes circuits between the requesting N_Port and the destination N_Ports. The destination N_Ports each transmit an ACK, indicating acceptance that are intercepted by the Multicast Server. The Multicast Server, based on the ACKs, RJTs, or BSYs received from the destinations, transmits an ACK, a P_RJT, or a P_BSY to the requesting N_Port indicating acceptance, rejection, or busy for the request. The return of an ACK indicates the establishment of a Multicast Connection. The Fabric retains the allocated circuits between the requesting N_Port and the destination N_Ports until the Connection Initiator request the Multicast Connection be removed.

Class 1 Delimiters, as specified in 13.2.3, are used to establish and remove the Multicast Connection and to initiate and terminate one or more sequences within the Multicast Connection.

Class 1 service parameters, as specified during Login, shall be used to manage Class 6 connections.

### 13.7.2 Rules

The following rules apply to exclusive Class 6 Connections. To provide a Class 6 Connection, the transmitting and

Copyright International Organization for Standardization
Provided by IHS under license with ISO
No reproduction or networking permitted without license from IHS Not for Resale

receiving N_Ports, Fabric, and multicast server shall obey the following rules:

a) Except for some Link Service Protocols, an N_Port requesting a Class 6 Connection is required to have previously logged in with the Fabric and the N_Ports with which it intends to communicate, either implicitly or explicitly. To Login explicitly, the requesting N_Port shall use Fabric and N_Port Login protocols.
b) The Fabric is responsible for establishing a Connection at the request of an N_Port and retaining it until the requesting N_Port explicitly requests removal of the Connection by setting the End_Connection bit in the F_CTL field (bit 18), or the requesting N_Port's link participates in a Primitive Sequence protocol. To establish or remove the dedicated connection, the requesting N_Port shall use the Class 1 Delimiters as specified in 13.2.3.
c) After transmitting a Class 6/SOFc1 frame, the N_Port requesting the Connection shall not transmit additional frames to the destination N_Ports until it receives, from the multicast server, an ACK that shall establish the connection.
d) Once a Connection is established between multiple N_Ports, only the requesting N_Port (Connection Initiator) shall send Data frames. Only the Connection Initiator shall cause the connection to be terminated. All frames shall contain S_ID and D_ID as appropriate (i.e., The D_ID shall be the multicast address).
e) A destination N_Port shall acknowledge delivery of every valid Data frame with an ACK_1 or the entire Sequence with a single ACK_0.
f) The Sequence Initiator shall increment the SEQ_CNT field of each successive frame transmitted within a Sequence. The Fabric shall guarantee delivery of the frames at the receivers in the same order of transmission within the Sequence (see 17.3.6).
g) The Connection Initiator N_Port of a Class 6 Connection shall be the multicast Source Nx_Port. The multicast Source Nx_Port may originate multiple Exchanges and initiate multiple Sequences within that Connection. The multicast Source Nx_Port shall set the OX_ID in accord with 9.11. RX_ID is not used in Class 6 and shall be set to hex 'FF FF' for all Class 6 frames. The Sequence Initiator shall be the multicast Source. It shall assign a SEQ_ID, for each Sequence it initiates in accord with 17.6.2.
h) Communicating N_Ports and the multicast server shall be responsible for end-to-end flow control, without any fabric involvement. ACK frames are used to perform end-to-end flow control. All Class 6 frames, except Class 6/SOFc1, participate only in end-to-end flow control. A Class 6/SOFc1 frame participates in both end-to-end and buffer-to-buffer flow controls.
i) The Fabric may reject a request for a Class 6 Connection or issue a busy with a valid reason code. After the dedicated connection is established, the fabric shall only issue a reject at the direction of the multicast server. The fabric shall issue a F_BSY to any Class 2 frame or discard any Class 3 frame, transmitted from a third N_Port and destined to one of the N_Ports engaged in the Connection (see 11.2.3.2 and 11.2.3.4) except if intermix is enabled.
j) The destination N_Ports specified in the Class 6/SOFc1 frame may respond with a busy or a reject with a valid reason code to this frame. The multicast server shall interpret these responses and respond with an ACK, busy, or a reject with a valid reason code to the requesting N_Port (see 23.3.4). Once the dedicated connection is established, the destination N_Ports shall not issue a busy but may issue a reject (see 11.2.3).
k) The End-to-end Credit established during login by interchanging service Parameters shall be honored (see 18.3). End-to-end credit shall be managed between Connection Initiator and the multicast server. At the beginning of a Connection, the End-to-end Credit_Count is re initialized to the value determined during Login. A Class 6/SOFc1 frame shall share the End-to-end Credit with Class 2 and Class 3 frames.
l) The Fabric shall guarantee full bandwidth availability to the connected N_Ports.
m) Frames within a Sequence are tracked on a Sequence_Qualifier and SEQ_CNT basis (see 9.2.1).
n) An N_Port or F_Port shall be able to recognize SOF delimiters for all classes of service, whether or not the N_Port or F_Port supports all classes of service, and provide appropriate responses for all classes of service with appropriate delimiters.
    A) If an N_Port that supports only Class 6 receives a Class 2 frame, and
        a) is not engaged in a dedicated connection, the N_Port shall issue a P_RJT with appropriate Class 2 delimiters and obey buffer-to-buffer flow control rules.
        b) is engaged in a dedicated connection, the N_Port response is unpredictable.
    B) If an N_Port that supports only Class 6 receives a Class 3 frame, and
        a) is not engaged in a dedicated connection, the N_Port shall discard the frame and obey the buffer-to-buffer flow control rules.

Copyright International Organization for Standardization
Provided by IHS under license with ISO
No reproduction or networking permitted without license from IHS Not for Resale

b) is engaged in a dedicated connection, the N_Port shall discard the frame and not follow the buffer-to-buffer flow control rules.

C) If an F_Port that supports only Class 6 receives a Class 2 frame, and
   a) is not engaged in a dedicated connection, the F_Port shall issue a F_RJT with appropriate Class 2 delimiters and obey buffer-to-buffer flow control rules.
   b) is engaged in a dedicated connection, the F_Port response is unpredictable.

D) If an F_Port that supports only Class 6 receives a Class 3 frame, and
   a) is not engaged in a dedicated connection, the F_Port shall discard the frame and obey buffer-to-buffer flow control rules.
   b) is engaged in a dedicated connection, the F_Port response is unpredictable.

o) If an N_Port does not support Class 6 and receives a Class 6/$SOF_{c1}$ frame, the N_Port shall issue a P_RJT with a $SOF_{n1}$ and EOFdt with a reason code of “Class not supported”. If an F_Port does not support Class 6 and receives a Class 6/$SOF_{c1}$ frame, the F_Port shall issue an F_RJT with a $SOF_{n1}$ and $EOF_{dt}$ with a reason code of “Class not supported”.

p) If an F_Port, not engaged in a dedicated connection, receives a frame with a $SOF_{i1}$ or $SOF_{n1}$, the F_Port response is unpredictable. However, the buffer-to-buffer control shall remain unaffected.

q) The effect of preemption of one destination N_Port on the remaining N_Ports is implementation-dependent.

### 13.7.3 Delimiters

A dedicated connection is requested by transmitting a Data frame using a $SOF_{c1}$ delimiter. $SOF_{c1}$ initiates the first Sequence; subsequent Sequences are initiated with a $SOF_{i1}$. $SOF_{n1}$ starts all frames other than the first within a Sequence.

$EOF_n$ terminates all frames other than the last frame within a Sequence. Each Sequence is terminated using an $EOF_t$. An $EOF_{dt}$ contained in a frame terminates the Sequence in which the frame is sent and it also serves to remove the dedicated connection. Other open Sequences in progress are also terminated. Exchanges and Sequences may be left in indeterminate state from the perspective of ULPs.

### 13.7.4 Frame size

The size of Data_Field of a frame using the $SOF_{c1}$ delimiter is limited by the smaller value of the maximum Data_Field size supported for frames with $SOF_{c1}$ by the Fabric and the destination N_Port. Subsequent frames, after a dedicated connection is established, are limited only by the maximum Data Field size supported by the destination N_Port.

### 13.7.5 Flow control

All Class 6 frames shall follow end-to-end flow control rules (see 18.4.1). The Class 6/$SOF_{c1}$ frame shall follow both end-to-end and buffer-to-buffer flow control rules (see 18.5.2).

### 13.7.6 Stacked Connect-requests

Stacked connect-requests is a feature that may be provided by the Fabric (see 20.5.3).

Copyright International Organization for Standardization
Provided by IHS under license with ISO
No reproduction or networking permitted without license from IHS Not for Resale

# 14 Name_Identifier Formats

## 14.1 Introduction

Name_Identifiers are used to identify entities in Fibre Channel such as an N_Port, Node, F_Port, Fabric or other Fibre Channel objects. The Name_Identifier for an entity shall be unique within the address domain of configuration, Fabric, point to point, or private loop. The scope of the uniqueness varies with the format type.

The NAA field (bits 31 to 28 of Word 0) within the Name_Identifier specifies its format and length. A list of supported formats is given in table 207.

**Table 207 - NAA identifiers**

| Words 0, bits 31 to 28 | NAA | Length |
|---|---|---|
| 0000’ b | Name not present | |
| ’0001’ b | IEEE 48-bit address | 64 |
| ’0010’ b | IEEE extended | 64 |
| ’0011’ b | Locally assigned | 64 |
| ’0100’ b | 32-bit IP address | 64 |
| ’0101’ b | IEEE Registered | 64 |
| ’0110’ b | IEEE Registered Extended | 128 |
| ’0111’ b to ’1011’ b | Reserved | |
| ’1100’ b | EUI-64 Mapped | 64 |
| ’1101’ b | EUI-64 Mapped | 64 |
| ’1110’ b | EUI-64 Mapped | 64 |
| ’1111’ b | EUI-64 Mapped | 64 |

An NAA field value of "Name not present” ('0000'b) indicated that the Name Value field does not contain an valid Name_Identifier, and shall be ignored.

## 14.2 IEEE 48-bit address

When the Name_Identifier format is IEEE 48-bit address, the name value field shall contain a 48-bit IEEE Standard 802.1A Universal LAN MAC Address (ULA). The ULA shall be represented as an ordered string of six bytes numbered from 0 to 5. ULA Bytes 0, 1, and 2 are generated using the IEEE Company_ID. Reference Annex J for information on obtaining an IEEE Company_ID. ULA Bytes 3, 4, and 5 represent a unique value provided by the identified company.

The least significant two bits of byte 0 are the Individual/Group Address (I/G) bit and the Universally or Locally Administered Address (U/L) bit. These bits shall be zero when a ULA is used in a Name_Identifer. Table 208 shows how the bytes of an ULA shall be mapped to two words in the Name_Identifier.

A 48-bit IEEE address Name_Identifier is a Worldwide Name.

**Table 208 - IEEE 48-bit address format**

| Bits<br>Word | 31 .. 28 | 27 .. 24 | 23 .. 16 | 15 .. 10 | 9 | 8 | 07 .. 00 |
|---|---|---|---|---|---|---|---|
| 0 | ’0001’ b | hex '0 00' | | ULA Byte 0 | U/ L | I/ G | ULA Byte 1 |
| 1 | ULA Byte 2 | | ULA Byte 3 | ULA Byte 4 | | | ULA Byte 5 |

Copyright International Organization for Standardization
Provided by IHS under license with ISO
No reproduction or networking permitted without license from IHS Not for Resale

Example -

A company has an IEEE Company_ID value:

hex 'AC DE 48'

This value is combined with a unique value generated by the identified company of hex '00 00 80' to create a ULA of:

hex 'AC DE 48 00 00 80'

Using this ULA, the following 64-bit Fibre Channel IEEE 48-bit identifier format is created:

hex '10 00 AC DE 48 00 00 80'

## 14.3 IEEE extended

When the Name_Identifier format is IEEE extended, the name value field shall contain the 48-bit IEEE address preceded by a 12 bit value that is an extension to the company assigned address portion of the 48-bit address that shall form a unique 60-bit value. The 48-bit IEEE address shall be as defined for the IEEE 48-bit address Name_Identifier format. This format is described in table 209.

An IEEE extended Name_Identifier is a Worldwide Name.

**Table 209 - IEEE extended format**

| Bits<br>Word | 31 .. 28 | 27 .. 24 | 23 .. 16 | 15 .. 10 | 9 | 8 | 07 .. 00 |
|---|---|---|---|---|---|---|---|
| 0 | ’0010’ b | Vendor Specific | | ULA Byte 0 | U/ L | I/ G | ULA Byte 1 |
| 1 | ULA Byte 2 | | ULA Byte 3 | ULA Byte 4 | | | ULA Byte 5 |

Example -

A company has an IEEE Company_ID value:

hex 'AC DE 48'

This value is combined with a unique value generated by the identified company of hex '00 00 80' to create a ULA of:

hex 'AC DE 48 00 00 80'

Using this ULA and a vendor specified value of hex 'B17’, the following 64-bit Fibre Channel IEEE extended identifier format is created:

hex '2B 17 AC DE 48 00 00 80'

## 14.4 Locally assigned

When the Name_Identifier format is locally assigned, the name value field shall be assigned in a manner determined by the administration of the Fabric in which it is assigned. This format is described in table 210.

Copyright International Organization for Standardization
Provided by IHS under license with ISO
No reproduction or networking permitted without license from IHS Not for Resale

A locally assigned Name_Identifier is unique within the Fabric wherein it is assigned.

**Table 210 - Locally assigned format**

| Bits Word | 31 .. 28 | 27 .. 24 | 23 .. 16 | 15 .. 08 | 07 .. 00 |
|---|---|---|---|---|---|
| 0 | ’0011’ b | Locally administered value | | | |
| 1 | Locally administered value | | | | |

## 14.5 32-bit IP address

When the Name_Identifier format is IP, the name value shall contain a 32-bit IP address. Assignment of IP addresses shall conform to accepted Internet Protocol conventions and be unique within the Fabric wherein it is assigned. This format is specified in table 211.

A 32-bit IP address Name_Identifier is unique within the Fabric wherein it is assigned.

**Table 211 - 32-bit IP address format**

| Bits Word | 31 .. 28 | 27 .. 24 | 23 .. 16 | 15 .. 10 | 9 | 8 | 07 .. 00 |
|---|---|---|---|---|---|---|---|
| 0 | ’0100’ b | Reserved | | | | | |
| 1 | IP Address Byte 0 | | IP Address Byte 1 | IP Address Byte 2 | | | IP Address Byte |

## 14.6 IEEE registered

When the Name_Identifier format is IEEE registered, the name value field shall contain the 24-bit IEEE Company_ID in canonical form, as specified by IEEE, followed by a 36-bit unique vendor specified identifier (VSID). This format is described in table 212.

An IEEE registered Name_Identifier is a Worldwide Name.

**Table 212 - IEEE Registered**

| Bits Word | 31 .. 28 | 27 .. 24 | 23 .. 16 | 15 .. 8 | 07 .. 04 | 03 .. 00 |
|---|---|---|---|---|---|---|
| 0 | ’0101’ b | IEEE Company_ID | | | | VSID (35 to 32) |
| 1 | VSID (31 to 0) | | | | | |

Example -

A company has an IEEE Company_ID value:

hex 'AC DE 48'

The VSID value selected by the identified company is hex 'B 17 34 F6 2D'.

The resulting Fibre Channel IEEE registered format is:

hex '5A CD E4 8B 17 34 F6 2D'

--`,,```,,,,````-`-`,,`,,`,`,,`---

Copyright International Organization for Standardization
Provided by IHS under license with ISO
No reproduction or networking permitted without license from IHS Not for Resale

## 14.7 IEEE registered extended

When the Name_Identifier format is IEEE registered extended, the name value field shall contain the 24-bit IEEE Company_ID in canonical form, as specified by IEEE, followed by a 36-bit unique vendor specified id (VSID). An additional 64-bit vendor specified identifier extension is defined. Only the first 64 bits of the IEEE registered extended format are used as the Name_Identifier and accessible by methods defined in this standard. The vendor specified identifier extension may have meaning to and be accessible by an FC-4 implementation. The format of IEEE registered extended is described table 213.

An IEEE registered extended name may be assigned to any Fibre Channel related object.

An IEEE registered extended Name_Identifier is a Worldwide Name.

**Table 213 - IEEE Registered Extended**

| Bits<br>Word | 31 .. 28 | 27 .. 24 | 23 .. 16 | 15 .. 8 | 07 .. 04 | 03 .. 00 |
|---|---|---|---|---|---|---|
| 0 | ’0110’ b | IEEE Company_ID | | | | VSID (35 to 32) |
| 1 | VSID (31 to 0) | | | | | |
| 2 | VSID Extension (63 to 32) | | | | | |
| 3 | VSID Extension (31 to 0) | | | | | |

Example -

A company has an IEEE Company_ID value:

hex 'AC DE 48'

The VSID value selected by the identified company is hex 'B 17 34 F6 2D' and the VSID extension is hex '12 34 56 78 AB CD EF'.

The resulting Fibre Channel IEEE registered extended format is:

hex '6A CD E4 8B 17 34 F6 2D'

## 14.8 Other uses of IEEE registered Company_ID

The Company_ID is used in the RNFT LS_ACC (see 12.3.2.53.3).

## 14.9 EUI-64 Mapped

### 14.9.1 General

When the Name_Identifier format is EUI-64 Mapped, The NAA field shall contain either hex ’0C’, hex ’0D’, hex ’0E’, or hex ’0F’. The name value field shall contain a modified 22-bit IEEE Company_ID, as specified in following paragraphs, followed by a 40-bit unique VSID.

The EUI-64 name is so mapped to account for the 4 additional bits allocated to the VSID. The general mapping scheme is to right shift the first byte of the IEEE Company_ID, moving bits 7 to 2 to positions 5 to 0 of the WWN Byte 0. Bits 1 to 0 of are the Universal/Local and Individual/Group bits, presumed to always be ’00’ b. Bits 7 to 6 of the WWN Byte 0 are set to ’11’ b, and the byte is prepended to the rest of the name. The format of EUI-64 Mapped

Copyright International Organization for Standardization
Provided by IHS under license with ISO
No reproduction or networking permitted without license from IHS Not for Resale

Name_Identifier is described in table 214.

**Table 214 - EUI-64 Mapped Name_Identifier Format**

| Bits<br>Word | 31...30 | 29...24 | 23...16 | 15...8 | 7...0 |
|---|---|---|---|---|---|
| 0 | ’11’b | IEEE Company_ID (modified) | | | VSID<br>(39 to 33) |
| 1 | VSID (32 to 0) | | | | |

### 14.9.2 EUI-64 to WWN Mapping Rules

Refer to table 215, Bit Position Map. The following mapping rules apply:

a) WWN.NAA 3 and WWN.NAA 2 are set = 1.
b) EUI.OUI 23 to 18 are mapped to WWN.OUI 21 to 16.
c) EUI.OUI 15 to 0 are mapped one for one to WWN.OUI 15 to 0.
d) EUI.VSID 39 to 0 are mapped one for one to WWN.VSID 39 to 0.

### 14.9.3 Encapsulated MAC-48 and EUI-48 translation

Encapsulated MAC-48 and EUI-48 names may be translated using the same rules as the EUI-64 names. Uniqueness shall be preserved.

**Table 215 - Bit Position Map**

| Byte Position | Bit Position in Byte | Bit Position in Name | EUI Values | WWN Values |
|---|---|---|---|---|
| 0 | 7 | 63 | OUI 23 | 1 |
| | 6 | 62 | OUI 22 | 1 |
| | 5 | 61 | OUI 21 | OUI 23 |
| | 4 | 60 | OUI 20 | OUI 22 |
| | 3 | 59 | OU1 19 | OUI 21 |
| | 2 | 58 | OUI 18 | OUI 20 |
| | 1 | 57 | OUI 17 / L/U | OUI 19 |
| | 0 | 56 | OUI 16 / I/G | OUI 18 |
| 1 | 7 to 0 | 55 to 48 | OUI 15 to 8 | OUI 15 to 8 |
| 2 | 7 to 0 | 47 to 40 | OUI 7 to 0 | OUI 7 to 0 |
| 3 | 7 to 0 | 39 to 32 | VSID 39 to 32 | VSID 39 to 32 |
| 4 | 7 to 0 | 31 to 24 | VSID 31 to 24 | VSID 31 to 24 |
| 5 | 7 to 0 | 23 to 16 | VSID 23 to 16 | VSID 23 to 16 |
| 6 | 7 to 0 | 15 to 8 | VSID 15 to 8 | VSID 15 to 8 |
| 7 | 7 to 0 | 7 to 0 | VSID 7 to 0 | VSID 7 to 0 |

Copyright International Organization for Standardization
Provided by IHS under license with ISO
No reproduction or networking permitted without license from IHS Not for Resale

# 15 Login and Service Parameters

## 15.1 Introduction

The Login procedure is a method by which an Nx_Port establishes its operating environment with a Fabric, if present, and other destination Nx_Ports with which it communicates. Fabric Login and N_Port Login are both accomplished with a similar procedure using different D_IDs and possibly different S_IDs.

Login between an Nx_Port and the Fabric or between two Nx_Ports is long-lived. The number of concurrent Nx_Ports with which an Nx_Port may be logged in with is a function of the Nx_Port facilities available. There is no one to one relationship between Login and Class 1 dedicated connections.

Login between an Nx_Port and the Fabric or between two Nx_Ports may use an explicit or implicit methods. When Login is referred to throughout other sections of this standard, either the explicit or implicit procedure may be used. Implicit Login is assumed to provide the same functionality as Explicit Login.

Explicit Login is accomplished using a Login (FLOGI or PLOGI) ELS (see 12.3.2.7) within a new Exchange to transfer the Service Parameters (contained in the Payload) of the Nx_Port initiating the Login Exchange. The LS_ACC contains the Service Parameters of the Responder (contained in the Payload).

Implicit Login is a method of defining and specifying the Service Parameters of destination Nx_Ports by means other than the explicit use of the Login ELS. Specific methods of implicit Login are not defined in this standard.

Implicit Fabric Login, unlike Explicit Fabric Login, does not require the support, within an Nx_Port, of the FLOGI Link Service request and reply. Implicit Fabric Login may be supported in a variety of ways, requiring varying levels of support within an Nx_Port.

An Nx_Port determines its own native N_Port_ID through explicit or implicit Login by

a) the Fabric, if present,
b) implicit definition, or
c) assignment in the PLOGI Sequence transmitted to a destination Nx_Port attached in a point-to-point topology.

Nx_Ports may collect Address Identifiers from other potential destination Nx_Ports from:

a) a name server function, if present,
b) implicit definition, or
c) an alternate initialization procedure.

N_Port Login shall not affect the state of Class 4 connections in the Fabric.

## 15.2 Default Login values

Prior to Login or following Logout, the following default set of Service Parameters shall apply (Class 1, 2, 3 and 6):

a) Concurrent Sequences = 1
b) Total Concurrent Sequences = 1
c) End-to-end Credit = 1
d) buffer-to-buffer Credit = 1 (0 for an L_Port)
e) Receive_Data_Field Size = 128
f) X_ID interlock required
g) ACK_1
h) Discard multiple Sequences Error Policy
i) Relative offset not used
j) E_D_TOV Resolution = 0

Copyright International Organization for Standardization
Provided by IHS under license with ISO
No reproduction or networking permitted without license from IHS Not for Resale

k) BB_SC_N = 0
l) Other optionally supported features shall not be used or required.

Following Login with the destination, an Nx_Port shall use the Service Parameters obtained through Login.

The Class 4 Service Parameters prior to N_Port Login shall be as specified in 15.2. The default Login values for Class 6 shall be the same as Class 1.

## 15.3 Fabric Login

### 15.3.1 Introduction

Login with the Fabric is required for all Nx_Ports, regardless of the class supported. Communication with other Nx_Ports shall not be attempted until the Fabric Login procedure is complete.

a) Fabric Login accomplishes the following functions:
b) It determines the presence or absence of a Fabric.
c) If a Fabric is present, it provides the Nx_Port with the specific set of operating characteristics associated with the entire Fabric, F_Port_Name and Fabric_Name.
d) If a Fabric is present, it provides the Fabric with the specific set of operating characteristics, N_Port_Name and Node_Name of the Nx_Port
e) If a Fabric is present, the Fabric shall optionally assign or shall confirm the N_Port_ID of the Nx_Port that initiated the Login.
f) If a Fabric is present, it initializes the buffer-to-buffer Credit.

### 15.3.2 Explicit Fabric Login

#### 15.3.2.1 Introduction

The explicit Fabric Login procedure shall require an Nx_Port to transmit a Fabric Login (FLOGI) Link Service ELS (see 12.3.2.7).

Explicit Fabric Login replaces previous Service Parameters. The Login procedure shall follow the Exchange and Sequence management rules as specified in clause 17. Frames within a Sequence shall operate according to R_RDY Primitive Signal, ACK, and Link_Response rules specified in 11.2.

#### 15.3.2.2 Explicit Fabric Login Request

The Nx_Port shall transmit the FLOGI in a new Exchange. The Payload of FLOGI contains the Service Parameters of the Nx_Port, a 64-bit N_Port_Name of the Nx_Port, and a 64-bit Node_Name. The Service Parameters are as specified for F_Port Login in 15.6. The applicability of the Service Parameters to Fabric Login are given in tables 217 and 222. The Nx_Port shall assign an OX_ID and set the D_ID to the well-known F_Port address (hex ’FF FF FE’).

If the Nx_Port is unidentified, an Nx_Port shall set the S_ID in the FLOGI to hex '00 00 00' or hex '00 00 YY'. If the Nx_Port sets the S_ID to hex ’00 00 00’, the Nx_Port is requesting the Fabric assign all 24 bits of the N_Port_ID. If the Nx_Port sets the S_ID to hex ’00 00 YY’, the Nx_Port is requesting the Fabric assign the upper 16 bits, bits 23 to 8, and validate the lower 8 bits, bits 7 to 0, of the N_Port_ID. An example of the use of S_ID of hex ’00 00 YY’ is FC-AL-2. The lower 8 bits of the N_Port_ID are the AL_PA.

#### 15.3.2.3 Responses to Explicit Fabric Login

The following are possible responses the Nx_Port may receive when transmitting a FLOGI:

a) LS_ACC reply Sequence with OX_ID equal to the OX_ID of the FLOGI, and the Common Service N_Port/ F_Port bit set to one (Fx_Port) - This is the normal response to a Fabric Login request. The D_ID of the

Copyright International Organization for Standardization
Provided by IHS under license with ISO
No reproduction or networking permitted without license from IHS Not for Resale

LS_ACC shall be the N_Port_ID assigned by the Fabric. If the S_ID in the FLOGI was hex ’00 00 00’, the D_ID shall be hex ’XX XX XX’. If the S_ID in the FLOGI was hex ’00 00 YY’, the D_ID shall be hex ’XX XX YY’. If the S_ID in the FLOGI was hex ’XX XX XX’, the D_ID shall be same value of hex ’XX XX XX’. The Payload shall include the Service Parameters for the entire Fabric, a 64-bit F_Port_Name and 64-bit Fabric_Name. The Service Parameters are as specified for F_Port Login in 15.6. The applicability of the Service Parameters to Fabric Login are given in tables 217 and 222. The Nx_Port may continue operation with other Nx_Ports if the N_Port_ID, F_Port_Name, and Fabric_Name are the same as in a previous Fabric Login or proceed to N_Port Login.

b) LS_ACC reply Sequence with OX_ID equal to the OX_ID of the FLOGI, and the Common Service Nx_Port/F_Port bit set to zero (Nx_Port) This indicates a point-to-point connection with another Nx_Port. The D_ID of the LS_ACC shall be the S_ID of the FLOGI. The Payload shall include the Service Parameters from the FLOGI with all classes mark invalid, a 64-bit N_Port_Name and 64-bit Node_Name of the connected Nx_Port. If the received N_Port_Name is less than its N_Port_Name, the Nx_Port proceeds to N_Port Login. If the received N_Port_Name is greater than its N_Port_Name, the Nx_Port waits for PLOGI from the attached N_Port.
c) F_BSY with OX_ID equal to the OX_ID of the FLOGI. The D_ID shall be the S_ID of the FLOGI. The Fabric is busy. The Nx_Port may retry the FLOGI again later.
d) P_BSY Sequence with OX_ID equal to the OX_ID of the FLOGI. The D_ID shall be the S_ID of the FLOGI. This indicates a point-to-point connection with another Nx_Port that is currently busy. The Nx_Port may proceed to N_Port Login after a delay to allow the destination Nx_Port to become not busy.
e) F_RJT Sequence with OX_ID equal to the OX_ID of the FLOGI. The D_ID shall be the S_ID of the FLOGI. The Fabric has rejected the FLOGI request. The reason code contained in the Payload determines the Nx_Port’s action. If the reason code is “class not supported”, the Nx_Port may originate a FLOGI in a different class. If the reason code is “Invalid S_ID”, the Nx_Port may originate a FLOGI with a different S_ID:
   A) If the S_ID of the rejected FLOGI was hex '00 00 00' or hex '00 00 YY', the Nx_Port may select a 24 bit value, hex 'XX XX XX', for its N_Port_ID by a method outside this standard and originate a FLOGI with this value in the S_ID.
   B) If the S_ID of the rejected FLOGI was hex 'XX XX XX', the Nx_Port may select a value of '00 00 00' or '00 00 yy', or a new value 'XX XX XX' for its N_Port_ID by a method outside this standard and originate a FLOGI with this value in the S_ID.

   If the reason code in the reject is other than the reason codes listed here, the Nx_Port should respond accordingly.
f) P_RJT Sequence, with OX_ID equal to the OX_ID of the FLOGI. The D_ID shall be the S_ID of the FLOGI. This indicates a point-to-point connection with another Nx_Port. The reason code contained in the Payload determines the Nx_Port’s action. If the reason code is “class not supported”, the Nx_Port may proceed to N_Port Login in a different class than used for the FLOGI. For other reason codes, the Nx_Port should respond accordingly.
g) FLOGI Sequence. This indicates a point-to-point connection with another Nx_Port. The Payload shall include a 64-bit N_Port_Name and 64-bit Node_Name of the connected Nx_Port. If the received N_Port_Name is less than its N_Port_Name, the Nx_Port proceeds to N_Port Login. If the received N_Port_Name is greater than its N_Port_Name, the Nx_Port waits for PLOGI from the attached N_Port.
h) LS_RJT Sequence with OX_ID equal to the OX_ID of the FLOGI. The D_ID of the LS_RJT shall be the N_Port_ID assigned by the Fabric. If the S_ID in the FLOGI was hex ’00 00 00’, the D_ID shall be hex ’XX XX XX’. If the S_ID in the FLOGI was hex ’00 00 YY’, the D_ID shall be hex ’XX XX YY’. If the S_ID in the FLOGI was hex ’XX XX XX’, the D_ID shall be hex ’XX XX XX’. The reason code contained in the Payload determines the Nx_Port’s action. The Nx_Port may alter the Service Parameters based on the reason code and originate a new FLOGI.
i) No Response may indicate a delivery error, for example, error on the physical transport. The Nx_Port shall perform error recovery per clause 21. The Nx_Port may originate a new FLOGI after recovery.
j) If the received N_Port_Name is equal to its N_Port_Name, then the Nx_Port is connected to itself and this case is outside the scope of this standard. The FLOGI is discarded.

#### 15.3.2.4 Relogin with the Fabric

During a Login with the Fabric, if the Nx_Port was previously logged in with the fabric and the N_Port_ID, F_Port_Name, and the Fabric_Name are the same as the previous login, the Nx_Port may continue current

--`,,```,,,,````-`-`,,`,,`,`,,`---

Copyright International Organization for Standardization
Provided by IHS under license with ISO
No reproduction or networking permitted without license from IHS Not for Resale

communications with other Nx_Ports that it has established logins with; if the Nx_Port detects that the N_Port_ID, F_Port_Name, and/or the Fabric_Name has changed since the last Fabric Login, the Nx_Port shall implicitly logout with all Nx_Ports and wait an R_A_TOV timeout period before initiating or accepting communication with other Nx_Ports. The timeout period shall start when the Nx_Port detects the change. After waiting the timeout period, new N_Port Logins are required before the Nx_Port may communicate with other Nx_Ports.

### 15.3.3 SOF delimiters

Fabric Login shall only be performed using Class 1, 2 or 3. Since the Fabric may not support all three classes, the FLOGI Sequence may require retry with a different SOF delimiter for each of the following classes:

a) Class 1 - $SOF_{c1}$
b) Class 2 - $SOF_{i2}$
c) Class 3 - $SOF_{i3}$

Fabric Login is valid for all supported classes as indicated by the validity bits in the FLOGI LS_ACC Reply Sequence.

$SOF_{c1}$ may be used to attempt fabric login or fabric relogin. $SOF_{i1}$ is not allowed.

Class 6 shall not be used for fabric login since the D_ID field requires a Alias_ID multicast address.

Selection of the SOF delimiter for the FLOGI Sequence is based on the Classes supported by the originating Nx_Port. The FLOGI Sequence is transmitted and the appropriate action is specified in 15.3.2.3. If an F_RJT with reason code "Class of Service not supported by entity at hex 'FF FF FE'" is received, another supported delimiter shall be attempted until the Login procedure is complete or until all supported delimiter types have been attempted. If all supported delimiter types have been attempted and the Fabric has rejected all or timed out, the Fabric and Nx_Port are incompatible and outside intervention is required.

Class 4 shall not be used for fabric login. Class 4 is dependent on Classes 1, 2, or 3 for fabric login of an N_Port. The Class 4 N_Port Login service parameters used during Fabric Login (in FLOGI or LS_ACC to FLOGI) shall be as specified in 25.2. The Fabric shall remove all Class 1, 4 and 6 connections to an N_Port when the N_Port performs a Fabric Login.

### 15.3.4 Frequency

Login between an Nx_Port and the Fabric should be long-lived. If Implicit Logout with the Fabric has occurred, it is necessary to perform a new Login with the Fabric (see 15.5.3).

### 15.3.5 Fabric Login completion - Originator

The Originator of the FLOGI request considers Fabric Login to have ended when

a) in Class 1, the Originator has transmitted the ACK ($EOF_t$ or $EOF_{dt}$) to the LS_ACC;
b) in Class 2, the Originator has transmitted the ACK ($EOF_t$) to the LS_ACC; or
c) in Class 3, the Originator has received the LS_ACC.

When Login is ended, the values of buffer-to-buffer Credit are initialized.

### 15.3.6 Fabric Login completion - Responder

The Responder of the FLOGI request considers Fabric Login to have ended when

a) in Class 1, the Responder has received the ACK ($EOF_t$ or $EOF_{dt}$) to the LS_ACC;
b) in Class 2, the Responder has received the ACK ($EOF_t$) to the LS_ACC; or
c) in Class 3, the Responder has transmitted the LS_ACC.

Copyright International Organization for Standardization
Provided by IHS under license with ISO
No reproduction or networking permitted without license from IHS Not for Resale

When Fabric Login has ended successfully, the values of buffer-to-buffer Credit are initialized.

## 15.4 N_Port Login

### 15.4.1 Introduction

N_Port Login follows the Fabric Login procedure. If a Fabric is present, as determined by performing the Fabric Login procedure, an Nx_Port proceeds with N_Port Login according to 15.4.2.2. If a Fabric is not present, as determined by performing the Fabric Login procedure, an Nx_Port proceeds with N_Port Login according to 15.4.2.4.

N_Port Login accomplishes the following functions:

a) It provides each Nx_Port with the other Nx_Port's operating characteristics, N_Port_Name and Node_Name.
b) If a Fabric is not present, it assigns the native N_Port_ID for both Nx_Ports.
c) If initializes the end-to-end Credit.
d) In point-to-point topology or between NL_Ports on the same loop, buffer-to-buffer Credit is initialized

N_Port Login between two Nx_Ports is complete when each Nx_Port has received the Service Parameters of the other Nx_Port. This may be accomplished by either implicit or explicit N_Port Login.

An Nx_Port is required to Login with each Nx_Port with which it intends to communicate. This includes reserved and well-known address identifiers since they are considered to be N_Ports (see 9.4.2).

NOTE 1 It is not required that an Nx_Port provide the same Login information with each destination Nx_Port or with the Fabric. However, an Nx_Port should avoid using contradictory or conflicting parameters with different Login destinations.

The N_Port Common Service Parameters during N_Port Login are specified in 15.6.2 (See table 217 for applicability). The N_Port Class Service Parameters during N_Port Login are specified in 15.6.5 (See table 222 for applicability). Both the Common Service Parameters and Class Service Parameters apply to each Nx_Port during N_Port Login.

NOTE 2 When an Nx_Port (A) receives a PLOGI from another Nx_Port (B), Nx_Port (A) should verify that it is not already logged in with an Nx_Port (C) with the same N_Port_Name but different Nx_Port native address identifier and Node_Name. If so, it should consider the prior Login to be ended and all open Sequences that it originated with or received from the destination Nx_Port are terminated before accepting the new Login. Such a situation may arise if configuration changes have occurred.

N_Port Login provides each Nx_Port with the other Nx_Port's Service Parameters. Knowledge of a destination Nx_Port's receive and transmit characteristics is required for data exchanges. Service Parameters of destination Nx_Ports are saved and used when communication with those Nx_Ports is initiated. The Service Parameters interchanged between two Nx_Ports may be asymmetrical. Saving the Service Parameters of destination Nx_Ports with which an Nx_Port communicates requires Nx_Port resources. These resources should be released using the destination N_Port Logout procedure (see 15.5).

Due to the resetting behavior of a PLOGI (for example, termination of all open exchanges with the destination port), a port shall only send a PLOGI to a destination port if it is not logged in with the destination port. Examples of why a port is not logged in include:

a) it has determined that a configuration change has occurred;
b) it has lost knowledge of the login parameters with the destination port;
c) the destination port has responded with a frame that indicates an error condition (for example, LOGO, P_RJT);
d) the local port has logged out the destination port, either implicitly or explicitly, due to resource constraints; and
e) the destination port failed to respond after 2 times R_A_TOV has expired.

Copyright International Organization for Standardization
Provided by IHS under license with ISO
No reproduction or networking permitted without license from IHS Not for Resale

A configuration change shall be determined by comparing the Port_Name, Node_Name, and Address_Identifier received in the ACC from an ADISC or PDISC with the values previously established during the previous login process. A configuration change has occurred if either N_Port_Name or N_Port_ID do match and any of the three parameters do not match.

### 15.4.2 Explicit N_Port Login

#### 15.4.2.1 Introduction

The explicit N_Port Login procedure shall require an Nx_Port to transmit a PLOGI Link request Sequence.

Explicit N_Port Login replaces previous Service Parameters. The Login procedure shall follow the Exchange and Sequence management rules as specified in clause 17. Frames within a Sequence shall operate according to R_RDY Primitive Signal, ACK, and Link_Response rules specified in 11.2.

A well-behaved Nx_Port shall Logout with another Nx_Port prior to initiating a new N_Port Login. However, if an Nx_Port receives or transmits a PLOGI request with another Nx_Port, it shall abnormally terminate open Sequences and respond to any new Sequences with that Nx_Port as though a Logout had been previously performed. During the N_Port Login procedure, other communication with the destination Nx_Port shall not be initiated or accepted. Once the N_Port Login procedure has been successfully completed, communication between the Nx_Ports may be initiated or accepted, (for example, if Nx_Port(A) performs a PLOGI request with Nx_Port(B) and Nx_Port(B) transmits the LS_ACC reply, then either Nx_Port(A) or Nx_Port(B) may initiate communication for other protocols. Nx_Port(B) shall not be required to transmit a PLOGI request Sequence to Nx_Port(A) unless it wishes to invalidate or alter the existing Login parameters).

#### 15.4.2.2 N_Port Login - Fabric present

The destination Nx_Port explicit Login procedure requires transmission of a N_Port Login (PLOGI) Link Service Sequence. The PLOGI is sent within an Exchange with an assigned OX_ID, the D_ID of the destination Nx_Port and a S_ID of originating Nx_Port. The Payload of this Sequence contains the Service Parameters, N_Port_Name, and Node_Name of the Nx_Port originating the PLOGI Sequence. The N_Port Service Parameters are as specified in 15.6. The applicability of the Service Parameters to N_Port Login are given in tables 217 and 222.

The normal reply Sequence to a PLOGI Link Service Sequence by an Nx_Port is a LS_ACC Link Service Reply Sequence within the Exchange identified by the OX_ID of the Login Sequence and the RX_ID assigned by the Responder with a D_ID of the originating Nx_Port (PLOGI Sequence) and a S_ID of the responding Nx_Port. The Payload of the LS_ACC contains the Service Parameters of the responding Nx_Port.

#### 15.4.2.3 Responses to N_Port Login - Fabric present

The following are possible responses the Nx_Port may receive in response to transmitting a PLOGI with a Fabric present:

a) LS_ACC reply Sequence with OX_ID equal to the OX_ID of the PLOGI, and the Common Service N_Port/ F_Port bit = 0 (Nx_Port) - This is the normal response to a N_Port Login request. The D_ID of the LS_ACC shall be the S_ID from the PLOGI. The S_ID of the LS_ACC shall be D_ID from the PLOGI. The Payload shall include the Service Parameters for the destination Nx_Port, a 64-bit N_Port_Name and a 64-bit Node_Name. The N_Port Service Parameters are as specified for in 15.6. The applicability of the Service Parameters to N_Port Login are given in tables 217 and 222. The Nx_Port may begin normal communication with the remote N_Port.
b) F_BSY with OX_ID equal to the OX_ID of the PLOGI. The D_ID shall be the S_ID of the PLOGI. The Fabric is busy. The Nx_Port may retry the PLOGI again later.
c) F_RJT Sequence with OX_ID equal to the OX_ID of the PLOGI. The D_ID shall be the S_ID of the PLOGI. The Fabric has rejected the PLOGI request. The reason code contained in the Payload determines the Nx_Port's action. If the reason code is Invalid D_ID, N_Port Login is not possible with the addressed Nx_Port. The Nx_Port may attempt Login with other destination Nx_Ports. For other reason codes, the Nx_Port should respond according to the code.

Copyright International Organization for Standardization
Provided by IHS under license with ISO
No reproduction or networking permitted without license from IHS Not for Resale

d) P_BSY Sequence with OX_ID equal to the OX_ID of the PLOGI. The D_ID shall be the S_ID of the PLOGI. The destination Nx_Port is busy. The Nx_Port may retry the PLOGI again later.
e) P_RJT Sequence with OX_ID equal to the OX_ID of the PLOGI. The D_ID shall be the S_ID of the PLOGI. The reason code contained in the Payload determines the Nx_Port's action. If the reason code is "Class not supported", the Nx_Port may attempt PLOGI in a different class. For other reason codes, the Nx_Port should responded according to the code.
f) PLOGI Sequence. The D_ID is the N_Port_ID of receiving Nx_Port. The S_ID is the N_Port_ID of the originating Nx_Port. The OX_ID is as assigned by the originating Nx_Port. The Payload shall include a 64-bit N_Port_Name and 64-bit Node_Name of the Nx_Port originating the PLOGI. This indicates a collision with N_Port Login from the destination Nx_Port. If the received N_Port_Name is less than the receiving Nx_Port's N_Port_Name, the Nx_Port sends LS_RJT to the originating Nx_Port with reason code Login already in progress. If the received N_Port_Name is greater than its N_Port_Name, the Nx_Port processes the received PLOGI.
g) LS_RJT Sequence with OX_ID equal to the OX_ID of the PLOGI. The D_ID of the LS_ACC shall be the N_Port_ID of the destination Nx_Port. The reason code contained in the Payload determines the Nx_Port's action. The Nx_Port may alter the Service Parameters based on the reason code and originate a new PLOGI.
h) No Response may indicate a delivery error, for example, error on the physical transport. The Nx_Port shall perform error recovery per clause 21. The Nx_Port may originate a new PLOGI after recovery.
i) If the received N_Port_Name is equal to its N_Port_Name, then the Nx_Port is connected to itself and this case is outside the scope of this standard.

#### 15.4.2.4 N_Port Login - No Fabric present

This procedure is based on the Nx_Port discovering the Fabric is not present during an attempted Fabric Login. (see 15.3.2.3) The destination N_Port explicit Login procedure requires transmission of a PLOGI Link Service Sequence in a new Exchange.

Only one Nx_Port in the point-to-point connection is required to transmit a PLOGI. If the N_Port_Names are exchanged during Fabric Login, the Nx_Port with the highest N_Port_Name shall transmit the PLOGI.

If either Nx_Port does not have access the N_Port_Name of the connected Nx_Port, it may send a PLOGI. The processing requirements for responses received after transmitting a PLOGI resolves the condition of both Nx_Ports transmitting PLOGI.

An Nx_Port in a point-to-point configuration transmits PLOGI within a new Exchange. The S_ID shall be different than the D_ID. The Payload of this Sequence contains the Service Parameters, N_Port_Name, and Node_Name of the Nx_Port originating the PLOGI Sequence. The N_Port Service Parameters are as specified for in 15.6. The applicability of the Service Parameters to N_Port Login are given in tables 217 and 222.

#### 15.4.2.5 Responses to N_Port Login - No Fabric present

The following are possible responses the Nx_Port may receive in response to transmitting a PLOGI in a point-to-point configuration:

a) LS_ACC reply Sequence with OX_ID equal to the OX_ID of the PLOGI, and the Common Service N_Port/F_Port bit = 0 (Nx_Port). The D_ID of the LS_ACC shall be the S_ID from the PLOGI. The S_ID shall be the destination Nx_Port's N_Port_ID assigned by the D_ID in the PLOGI. The Payload shall include the Service Parameters for the destination Nx_Port, a 64-bit N_Port_Name and a 64-bit Node_Name. The N_Port Service Parameters are as specified for in 15.6. The applicability of the Service Parameters to N_Port Login are given in tables 217 and 222. This is the normal response to a N_Port Login request. The Nx_Port may begin normal communication with the remote N_Port.
b) P_BSY Sequence with OX_ID equal to the OX_ID of the FLOGI. The D_ID shall be the S_ID of the PLOGI. The destination Nx_Port is busy. The Nx_Port may retry the PLOGI again later.
c) P_RJT Sequence with OX_ID equal to the OX_ID of the PLOGI. The D_ID shall be the S_ID of the PLOGI. The reason code contained in the Payload determines the Nx_Port's action. If the reason code is "Class

--`,,```,,,,````-`-`,,`,,`,`,,`---

Copyright International Organization for Standardization
Provided by IHS under license with ISO
No reproduction or networking permitted without license from IHS Not for Resale

not supported", the Nx_Port may attempt N_Port Login in a different Class. For other reason codes, the Nx_Port should respond according to the code.

d) LS_RJT Sequence with OX_ID equal to the OX_ID of the PLOGI. The D_ID of the LS_ACC shall be the N_Port_ID of the destination Nx_Port. The reason code contained in the Payload determines the Nx_Port's action. The Nx_Port may alter the Service Parameters based on the reason code and originate a new PLOGI.
e) PLOGI Sequence. The D_ID is the Port_Identifier of receiving Nx_Port. The S_ID is the N_Port_ID of the originating Nx_Port. The OX_ID is as assigned by the originating Nx_Port. The Payload shall include a 64-bit N_Port_Name and 64-bit Node_Name of the Nx_Port originating the PLOGI. This indicates a collision with N_Port Login from the destination Nx_Port. If the received N_Port_Name is less than the receiving Nx_Port's N_Port_Name, the Nx_Port sends LS_RJT to the originating Nx_Port with reason code Login already in progress. If the received N_Port_Name is greater than its N_Port_Name, the Nx_Port processes the received PLOGI.
f) No Response may indicate a delivery error, for example, error on the physical transport. The Nx_Port shall perform error recovery per clause 21. The Nx_Port may originate a new PLOGI after recovery.
g) If the received N_Port_Name is equal to its N_Port_Name, then the Nx_Port is connected to itself and this case is outside the scope of this standard.

### 15.4.3 SOF delimiters

N_Port Login is only supported in Class 1, 2, and 3. Since the destination Nx_Port may not support all these classes for Login, the PLOGI Sequence may require retransmission in a different Class with the appropriate SOF in the same manner described for Fabric Login (see 15.3.3). Login is valid for all supported classes as indicated by the validity bits in the PLOGI LS_ACC Reply Sequence.

### 15.4.4 Frequency

The frequency of N_Port Login is installation dependent based on the frequency of configuration changes that may alter the N_Port_ID within an installation. Service Parameters of other Nx_Ports are retained until the next N_Port Login or until N_Port Logout (implicit or explicit) is performed.

### 15.4.5 N_Port Login completion - Originator

The Originator of the PLOGI request considers Login to have ended when

a) in Class 1, the Originator has transmitted the ACK ($EOF_t$ or $EOF_{dt}$) to the LS_ACC;
b) in Class 2, the Originator has transmitted the ACK ($EOF_t$) to the LS_ACC; or
c) in Class 3, the Originator has received the LS_ACC.

When N_Port Login is ended with a Fabric present, the value of end-to-end Credit is initialized. When N_Port Login is ended in a point-to-point topology, the values of buffer-to-buffer and end-to-end Credit are initialized.

### 15.4.6 N_Port Login completion - Responder

The Responder of the PLOGI request considers Login to have ended when

a) in Class 1, the Responder has received the ACK ($EOF_t$ or $EOF_{dt}$) to the LS_ACC;
b) in Class 2, the Responder has received the ACK ($EOF_t$) to the LS_ACC; or
c) in Class 3, the Responder has transmitted the LS_ACC.

When N_Port Login is ended with a Fabric present, the value of end-to-end Credit is initialized. When N_Port Login is ended in a point-to-point topology, the values of buffer-to-buffer and end-to-end Credit are initialized.

### 15.4.7 N_Port Login frame flow

See figures B.5, B.6, and B.7 for examples of frame flow for N_Port Login for Classes 1, 2, and 3, respectively.

--`,,```,,,,````-`-`,,`,,`,`,,`---

Copyright International Organization for Standardization
Provided by IHS under license with ISO
No reproduction or networking permitted without license from IHS Not for Resale

## 15.5 Logout

### 15.5.1 Introduction

The destination Logout procedure provides a method for removing service between two Nx_Ports or for removing an N_Port_ID that was previously assigned by an F_Port. Logout releases resources associated with maintaining Service with a destination Nx_Port. Implicit Logout may occur between an Nx_Port and the Fabric (see 15.5.3), or an N_Port may use the LOGO ELS to request the removal of a virtual N_Port_ID previously assigned by the fabric

NOTE Except for the removal of a previously-assigned N_Port_ID, explicit Fabric Logout is not needed since the Fabric has no resources dedicated to an Nx_Port that could be usefully made available.

### 15.5.2 Explicit N_Port Logout

Logout is accomplished by transmitting a Logout (LOGO) Link Service request Sequence (see 12.3.2.8) to a destination Nx_Port. The Logout procedure is complete when the responding Nx_Port transmits a LS_ACC Link Service reply Sequence.

To explicitly Logout, the initiating Nx_Port shall terminate other open Sequences that it initiated with the destination Nx_Port prior to performing Logout, otherwise, the state of other open Sequences is unpredictable. If an Nx_Port receives a Logout request while another Sequence is open that was initiated from the requesting Nx_Port, it may reject the Logout request using an LS_RJT (Link Service Reject).

After an explicit Logout is performed with an Nx_Port, the default Login Service Parameters specified in 15.2 shall be functional if Login was explicit. After an explicit Logout is performed with an Nx_Port, the implicit Login Service Parameters shall be functional if Login was implicit.

### 15.5.3 Implicit Logout

If an Nx_Port receives or transmits the NOS or OLS Primitive Sequence, it shall be implicitly logged out from the Fabric, if present, or attached Nx_Port in a point-to-point topology. Fabric Login shall be performed following implicit Logout. Communication with other Nx_Ports shall not be accepted until the Fabric Login procedure is complete (implicit or explicit).

During Login with the Fabric, if the Nx_Port detects that the N_Port_ID, F_Port_Name and/or the Fabric_Name has changed since the last Fabric Login, and the Clean Address bit is zero, the Nx_Port shall implicitly logout with all Nx_Ports and wait an R_A_TOV timeout period before initiating or accepting communication with other Nx_Ports. The timeout period shall start when the Nx_Port detects the change. After waiting the timeout period, new N_Port Logins are required before the Nx_Port may communicate with other Nx_Ports.

If an Nx_Port receives OLS from the Fabric, the Fabric may be indicating configuration changes internal to the Fabric using the Online to Offline Protocol.

NOTE If an Nx_Port is concerned that a partial Fabric Login may be in process using its link immediately preceding its attempted Fabric Login, it may wait an R_A_TOV in order to ensure that the response it receives from the Fx_Port during Fabric Login is associated with its Login request.

## 15.6 Service Parameters

### 15.6.1 ELS and LS_ACC Payload

Table 216 defines the Payload format for the FLOGI and PLOGI ELSs and the LS_ACCs. The definitions of the parameters are applicable to PLOGI, FLOGI, PLOGI LS_ACC and FLOGI LS_ACC unless stated otherwise.

NOTE 1 There are no separate Class 6 login Service Parameters as Class 1 service parameters are used instead. Service Parameter options specify FC-2 capability.

Copyright International Organization for Standardization
Provided by IHS under license with ISO
No reproduction or networking permitted without license from IHS Not for Resale

NOTE 2 The Link Service may further limit values supplied during Login as specified by individual Upper Level Protocols.

**Table 216 - FLOGI, PLOGI or LS_ACC Payload**

| Bits / Word | 31 .. 24 | 23 .. 16 | 15 .. 08 | 07 .. 00 |
|---|---|---|---|---|
| 0 | LS_Command code | | | |
| 1 | MSB | Common Service Parameters (16 bytes) | | |
| .. | | | | |
| 4 | | | | LSB |
| 5 | MSB | Port_Name | | |
| 6 | | | | LSB |
| 7 | MSB | Node_ or Fabric_Name | | |
| 8 | | | | LSB |
| 9 | MSB | Class 1 and Class 6 Service Parameters (16 bytes) | | |
| .. | | | | |
| 12 | | | | LSB |
| 13 | MSB | Class 2 Service Parameters (16 bytes) | | |
| .. | | | | |
| 16 | | | | LSB |
| 17 | MSB | Class 3 Service Parameters (16 bytes) | | |
| .. | | | | |
| 20 | | | | LSB |
| 21 | MSB | Class 4 Service Parameters (16 bytes) | | |
| .. | | | | |
| 24 | | | | LSB |
| 25 | MSB | Vendor Version Level (16 bytes) | | |
| .. | | | | |
| 28 | | | | LSB |
| 29 | MSB | Services Availability[a] (8 bytes) | | |
| 30 | | | | LSB |
| 31 | Login Extension Data Length[a] | | | |
| 32 | MSB | Login Extension Data[a] | | |
| .. | | | | |
| 61 | | | | LSB |
| 62 | | Clock Synchronization QoS[a] (8 bytes) | | |
| 63 | | | | |

[a] These fields are only present when the Payload bit (see 15.6.2.4.17) is set to one. When the Payload bit is set to zero, these fields are not present in the Payload (i.e., the Payload is 116 bytes long).

Copyright International Organization for Standardization
Provided by IHS under license with ISO
No reproduction or networking permitted without license from IHS Not for Resale

### 15.6.2 Common Service Parameters

#### 15.6.2.1 Applicability

Table 217 defines the applicability, by class as well as by PLOGI, FLOGI, PLOGI LS_ACC and FLOGI LS_ACC, of the Common Service Parameters to N_Port and Fabric Login. These are words 1 to 4 in the Payload (see table 217).

**Table 217 - Common Service Parameter applicability**

| Service Parameter | Word | Bits | PLOGI and PLOGI LS_ACC Parameter applicability | | | | FLOGI Parameter applicability | | | | FLOGI LS_ACC Parameter applicability | | | |
|---|---|---|---|---|---|---|---|---|---|---|---|---|---|---|
| | | | Class | | | | Class | | | | Class | | | |
| | | | 1 [a] | 2 | 3 | 4 | 1 [a] | 2 | 3 | 4 | 1 [a] | 2 | 3 | 4 |
| FC-PH Version - Obsolete | 0 | 31 to 16 | n | n | n | n | n | n | n | n | n | n | n | n |
| Buffer-to-Buffer Credit | 0 | 15 to 0 | y | y | y | n | y | y | y | n | y | y | y | n |
| Common Features | 1 | 31 to 16 | | | | | | | | | | | | |
| Continuously increasing relative offset | 1 | 31 | y | y | y | y | n | n | n | n | n | n | n | n |
| Clean Address | 1 | 31 | n | n | n | n | n | n | n | n | y | y | y | y |
| Random relative offset | 1 | 30 | y | y | y | y | n | n | n | n | n | n | n | n |
| Valid Vendor Version Level | 1 | 29 | y | y | y | y | y | y | y | y | n | n | n | n |
| Multiple N_Port_ID Assignment | 1 | 29 | n | n | n | n | n | n | n | n | y | y | y | y |
| N_Port/F_Port | 1 | 28 | y | y | y | y | y | y | y | y | y | y | y | y |
| BB_Credit Management | 1 | 27 | y | y | y | y | y | y | y | y | n | n | n | n |
| E_D_TOV Resolution | 1 | 26 | y [b] | y [b] | y [b] | y [b] | n | n | n | n | y | y | y | y |
| Multicast supported by Fabric | 1 | 25 | n | n | n | n | n | n | n | n | y | y | y | y |
| Broadcast supported by Fabric | 1 | 24 | n | n | n | n | n | n | n | n | y | y | y | y |
| Hunt Group routing supported by Fabric | 1 | 23 | n | n | n | n | n | n | n | n | y | y | y | y |
| Query Data Buffer conditions | 1 | 22 | y | y | y | y | y | y | y | y | y | y | y | y |
| Security bit (see FC-SP) | 1 | 21 | - | - | - | - | - | - | - | - | - | - | - | - |

Legend
"y" indicates yes, applicable (i.e., has meaning);
"n" indicates no, not applicable (i.e., has no meaning)

[a] The Class 1 Service Parameters shall be used for Class 6. Each has the same applicability as Class 1.

[b] E_D_TOV resolution and the corresponding value are only meaningful in a point-to-point topology and when doing PLOGI with an NL_Port on the same loop.

--`,,```,,,,````-`-`,,`,,`,`,,`---

Copyright International Organization for Standardization
Provided by IHS under license with ISO
No reproduction or networking permitted without license from IHS Not for Resale

**Table 217 - Common Service Parameter applicability (Continued)**

| Service Parameter | Word | Bits | PLOGI and PLOGI LS_ACC Parameter applicability | | | | FLOGI Parameter applicability | | | | FLOGI LS_ACC Parameter applicability | | | |
|---|---|---|---|---|---|---|---|---|---|---|---|---|---|---|
| | | | Class | | | | Class | | | | Class | | | |
| | | | 1 [a] | 2 | 3 | 4 | 1 [a] | 2 | 3 | 4 | 1 [a] | 2 | 3 | 4 |
| Clock Synchronization Primitive Capable | 1 | 20 | y | y | y | y | y | y | y | y | y | y | y | y |
| R_T_TOV Value | 1 | 19 | y | y | y | y | y | y | y | y | y | y | y | y |
| Dynamic Half Duplex Supported | 1 | 18 | y | y | y | y | y | y | y | y | y | y | y | y |
| SEQ_CNT | 1 | 17 | y | y | y | y | n | n | n | n | n | n | n | n |
| Payload bit | 1 | 16 | y | y | y | y | y | y | y | y | y | y | y | y |
| BB_SC_N | 1 | 15 to 12 | y | y | y | n | y | y | y | n | y | y | y | n |
| Buffer-to-Buffer Receive Data Field Size | 1 | 11 to 0 | y | y | y | y | y | y | y | y | y | y | y | y |
| Nx_Port Total Concurrent Sequences | 2 | 31 to 16 | y | y | y | y | n | n | n | n | n | n | n | n |
| Relative offset by Info Category | 2 | 15 to 0 | y | y | y | y | n | n | n | n | n | n | n | n |
| R_A_TOV | 2 | 31 to 0 | n | n | n | n | n | n | n | n | y | y | y | y |
| E_D_TOV Value | 3 | 31 to 0 | y [b] | y [b] | y [b] | y [b] | n | n | n | n | y | y | y | y |

Legend
"y" indicates yes, applicable (i.e., has meaning);
"n" indicates no, not applicable (i.e., has no meaning)

[a] The Class 1 Service Parameters shall be used for Class 6. Each has the same applicability as Class 1.

[b] E_D_TOV resolution and the corresponding value are only meaningful in a point-to-point topology and when doing PLOGI with an NL_Port on the same loop.

### 15.6.2.2 Payload

The Common Service Parameters Payload for FLOGI is shown in table 218.

**Table 218 - Common Service Parameters - FLOGI**

| Bits / Word | 31 .. 24 | 23 .. 16 | 15 .. 12 | 11 .. 08 | 07 .. 00 |
|---|---|---|---|---|---|
| **0** | FC-PH Version - Obsolete | | Buffer-to-buffer Credit | | |
| **1** | Common Features (see table 217) | | BB_SC_N | Buffer-to-buffer Receive Data Field size | |
| **2** | Reserved | | Reserved | | |
| **3** | Reserved | | Reserved | | |

Copyright International Organization for Standardization
Provided by IHS under license with ISO
No reproduction or networking permitted without license from IHS Not for Resale

The Common Service Parameters Payload for PLOGI and PLOGI LS_ACC is shown in table 219.

**Table 219 - Common Service Parameters - PLOGI and PLOGI LS_ACC**

| Bits / Word | 31 .. 24 | 23 .. 16 | 15 .. 12 | 11 .. 08 | 07 .. 00 |
|---|---|---|---|---|---|
| 0 | FC-PH Version - Obsolete | | Buffer-to-buffer Credit | | |
| 1 | Common Features (see table 217) | | BB_SC_N | Buffer-to-buffer Receive Data Field size | |
| 2 | Reserved | Total Concurrent Sequences | Relative offset by Information Category | | |
| 3 | E_D_TOV | | | | |

The Common Service Parameters Payload for FLOGI LS_ACC is shown in table 220.

**Table 220 - Common Service Parameters - FLOGI LS_ACC**

| Bits / Word | 31 .. 24 | 23 .. 16 | 15 .. 12 | 11 .. 08 | 07 .. 00 |
|---|---|---|---|---|---|
| 0 | FC-PH Version - Obsolete | | Buffer-to-buffer Credit (Fx_Port) | | |
| 1 | Common Features (see table 217) | | BB_SC_N | Buffer-to-buffer Receive Data Field size | |
| 2 | R_A_TOV | | | | |
| 3 | E_D_TOV | | | | |

#### 15.6.2.3 Buffer-to-buffer Credit

The buffer-to-buffer Credit field (word 0, bits 15 to 0) defines the number of buffers available for holding Class 1 and Class 6 connect-request, Class 2, or Class 3 frames received. An FC_Port tracks buffer-to-buffer Credit as a single entity for all frames subject to buffer-to-buffer flow control (see clause 18). Values in the buffer-to-buffer Credit field have the same format as in the end-to-end Credit Class Service Parameter (see 15.6.5.9).

For N_Port Login, this field shall only be meaningful for an Nx_Port in a point-to-point topology and between two NL_Ports on the same loop.

#### 15.6.2.4 Common Features

##### 15.6.2.4.1 Continuously increasing relative offset

0 = not supported
1 = supported

If the continuously increasing relative offset bit (word 1, bit 31) is set to one, the Nx_Port supplying this parameter shall be capable of supporting continuously increasing relative offset, if present (F_CTL bit 3), within a Sequence on a frame by frame SEQ_CNT basis. This bit shall only be applicable to those Information Categories in which an Nx_Port supports relative offset (i.e., word 3, bits 15 to 0). See 9.13 and 19.5 for the use of continuously increasing relative offset.

This bit shall be applicable to a Sequence Initiator in addition to a Sequence Recipient for all Classes of Service supported by the Nx_Port.

Copyright International Organization for Standardization
Provided by IHS under license with ISO
No reproduction or networking permitted without license from IHS Not for Resale

#### 15.6.2.4.2 Clean Address

0 = No information
1 = Clean Address

The Clean Address bit (word 1, bit 31) provides an indication to an Nx_Port as to whether the address it was assigned by the Fabric had been previously used by another device within R_A_TOV. If this bit is set to zero, the assigned address may or may not have been used by a previous device within R_A_TOV. If this bit is set to one, the assigned address has not been used by any other device within R_A_TOV, or has been assigned to the current device for a previous FLOGI and not been changed within R_A_TOV. This bit is only meaningful in the FLOGI LS_ACC, it is not meaningful in the FLOGI request.

#### 15.6.2.4.3 Random relative offset

0 = not supported
1 = supported

The random relative offset bit (word 1, bit 30) indicates that the Nx_Port supplying this parameter shall be capable of supporting random relative offset values, if present (F_CTL bit 3). Random values may increase, decrease, or otherwise fluctuate within a Sequence. This bit shall only be applicable to those Information Categories in which an Nx_Port supports relative offset (i.e., word 3, bits 15 to 0). See 19.5 for the use of random relative offset.

This bit shall be applicable to a Sequence Initiator in addition to a Sequence Recipient for all Classes of Service supported by the Nx_Port.

#### 15.6.2.4.4 Valid Vendor Version Level

0 = not valid
1 = Valid

In PLOGI, PLOGI LS_ACC, and FLOGI, if the Valid Vendor Version Level bit (word 1, bit 29) is set to one, the Vendor Version Level (words 25 through 28 in table 216) contains valid information. If it is set to zero, the Vendor Version Level field is not meaningful.

#### 15.6.2.4.5 Multiple N_Port_ID Assignment

0 = not supported
1 = supported

The Multiple N_Port_ID Assignment bit (word 1, bit 29) shall be set to one to indicate that the F_Port supplying this parameter is capable of assigning multiple N_Port_IDs to the attached N_Port using the FDISC ELS. The Multiple N_Port_ID Assignment bit shall be set to zero to indicate that the F_Port is not capable of assigning multiple N_Port_IDs to the attached N_Port. This bit is only meaningful in the FLOGI LS_ACC, it is not meaningful in the FLOGI request.

#### 15.6.2.4.6 N_Port/F_Port

0 = Nx_Port
1 = Fx_Port

The N_Port/F_Port Bit (word 1, bit 28) bit shall be set to zero for PLOGI, PLOGI LS_ACC and FLOGI. It shall be set to one for FLOGI LS_ACC.

#### 15.6.2.4.7 BB_Credit Management

0 = BB_Credit management specified in 18.5 shall be used.
1 = Alternate BB_Credit management specified in 18.5.10 shall be used.

Copyright International Organization for Standardization
Provided by IHS under license with ISO
No reproduction or networking permitted without license from IHS Not for Resale

The BB_Credit Management bit (word 1, bit 27) specifies the type of BB_Credit Management to be used.

#### 15.6.2.4.8 E_D_TOV Resolution

0 = 1 ms
1 = 1 ns

The E_D_TOV resolution bit (word 1, bit 26) indicates the resolution of the E_D_TOV timer. If the bit is set to zero, the timer shall be in increments of 1 ms. If the bit is set to one, the timer shall be in increments of 1 ns. See 21.2.1.3 for the definition of E_D_TOV.

#### 15.6.2.4.9 Multicast

0 = Multicast not supported by the Fabric
1 = Multicast supported by the Fabric

The Multicast bit (word 1, bit 25) indicates whether multicast is supported by the Fabric or not. It is only meaningful in the FLOGI LS_ACC. For multicast requirements see clause 23.

#### 15.6.2.4.10 Broadcast

0 = Broadcast not supported by the Fabric
1 = Broadcast supported by the Fabric

The Broadcast bit (word 1, bit 24) indicates whether broadcast is supported by the Fabric or not. It is only meaningful in the FLOGI LS_ACC. For broadcast requirements see 23.4.

#### 15.6.2.4.11 Hunt Group

0 = Hunt Groups not supported.
1 = Hunt Groups supported.

The Hunt Group bit (word 1, bit 23) indicates whether or not the Fabric supports Hunt Group routing. If it is set to zero, the Fabric shall not support Hunt Group routing. If it is set to one, the Fabric shall support Hunt Group routing. (see clause 22)

#### 15.6.2.4.12 Query Buffer Conditions

0 = No buffer conditions to report.
1 = Buffer conditions to report.

The Query Buffer Conditions bit (word 1, bit 22) indicates whether or not the FC_Port has unusual buffer conditions to report. A Report Port Buffer Conditions (RPBC) ELS may be issued to gather the buffer conditions. An FC_Port shall only set the Query Buffer Conditions to 1 if the FC_Port supports the RPBC ELS, and any of the following conditions are true:

a) The ELS Receive Buffer Field Size field is different that the Buffer-to-buffer Receive Data_Field Size field in the common service parameters, or
b) multi-frame ELSs are not supported.

#### 15.6.2.4.13 Clock Synchronization Primitive Capable

0 = not Clock Synchronization Primitive Capable
1 = Clock Synchronization Primitive Capable

The Clock Synchronization Primitive Capable bit (word 1, bit 20) indicates support for the Primitive method of Clock Synchronization (see 27.3). If the bit is set to zero, the Primitive method of Clock Synchronization is not supported.

--`,,```,,,,````-`-`,,`,,`,`,,`---

Copyright International Organization for Standardization
Provided by IHS under license with ISO
No reproduction or networking permitted without license from IHS Not for Resale

If the bit is set to one, the meaning is as defined in table 221.

**Table 221 - Clock Synchronization Applicability**

| | Meaning if bit set to one |
|---|---|
| Clock Synchronization Server (N_Port Login only) | The Clock Synchronization Server is capable of generating clock synchronization Primitive Signals. |
| Other FC_Ports (N_Port Login only) | The FC_Port is capable of receiving the clock synchronization Primitive Signals and acting upon them. |
| Fabric (FLOGI LS_ACC only) | The Fabric is capable of receiving the clock synchronization Primitive Signals and acting upon them. |

#### 15.6.2.4.14 R_T_TOV value

0 = Default value of 100 ms.
1 = Short value of 100 µs.

The R_T_TOV value (word 1, bit 19) indicates support for the short value of R_T_TOV. If this bit is set to zero, the default value of 100 ms is specified. If it is set to one, the value of 100 µs is specified.

#### 15.6.2.4.15 Dynamic Half Duplex Supported

0 = DHD not supported
1 = DHD supported

The Dynamic Half Duplex Supported bit (word 1, bit 18) indicates support for Dynamic Half Duplex. If it is set to zero, Dynamic Half Duplex is not supported. If it is set to one, the FC_Port supports the reception of the DHD primitive.

NOTE DHD is applicable to FC-AL topologies. See [2], FC-AL-2, for a description of DHD behavior.

#### 15.6.2.4.16 SEQ_CNT

0 = Normal rules apply to SEQ_CNT
1 = Continuously Increasing SEQ_CNT shall be used.

SEQ_CNT (word 1, bit 17) indicates the requirement on SEQ_CNT. If the bit is set to zero, normal rules shall apply to SEQ_CNT usage. If the bit is set to one, the Nx_Port is guaranteeing that it shall transmit all frames within an Exchange using a continuously increasing SEQ_CNT. Each Exchange shall start with SEQ_CNT set to zero in the first frame, and every frame transmitted after that shall increment the previous SEQ_CNT by one, even across transfers of Sequence Initiative. Any frames received from the other Nx_Port in the Exchange shall have no effect on the transmitted SEQ_CNT (see 9.10).

#### 15.6.2.4.17 Payload Bit

0 = Payload length is 116 bytes
1 = Payload length in bytes is 256 plus four times the value of the Login Extension Length field

The Payload bit (word 1 bit 16) indicates the length of the FLOGI or PLOGI Payload. If it is set to zero, the Payload length shall be 116 bytes. If it is set to one, the Payload length in bytes shall be 256 plus four times the value of the Login Extension Length field.

If Payload bit is 0 in PLOGI or FLOGI, then LS_ACC sent in response shall have the Payload bit set to 0.

Copyright International Organization for Standardization
Provided by IHS under license with ISO
No reproduction or networking permitted without license from IHS Not for Resale

#### 15.6.2.5 BB_SC_N

The Buffer-to-buffer State Change Number (BB_SC_N) field (word 1, bits 15 to 12) specifies the Buffer-to-buffer State Change Number. It indicates that the sender of the PLOGI or FLOGI frame is requesting $2^{BB_SC_N}$ number of frames to be sent between two consecutive BB_SCs primitives, and $2^{BB_SC_N}$ number of R_RDY primitives to be sent between two consecutive BB_SCr primitives. See 18.5.11 for a description of the BB_Credit recovery process.

#### 15.6.2.6 Buffer-to-buffer Receive Data_Field size

The buffer-to-buffer Receive Data_Field Size field (word 1, bits 11 to 0) specifies the largest FT_1 frame Data_Field Size that may be received by the Nx_Port supplying the Service Parameters as a Sequence Recipient for:

a) a connect-request ($SOF_{c1}$),
b) a Class 2 Data frame, or
c) a Class 3 Data frame

The value shall be a multiple of four bytes. Values less than 256 or greater than 2 112 are invalid. An Fx_Port shall support a Data Field size of at least 256 bytes.

#### 15.6.2.7 Total Concurrent Sequences

Total Concurrent Sequences field (word 3, bits 23 - 16) specifies the total number of Concurrent Sequences for all classes that the Nx_Port is capable of supporting as a Recipient.

The Total Concurrent Sequences specified by an Nx_Port shall be less than or equal to the sum of the Concurrent Sequences supported on a Class by Class basis (for example, an Nx_Port may specify that it is capable of supporting ten Concurrent Sequences in Class 2 and ten Concurrent Sequences in Class 3. However, the total number of Concurrent Sequences when both Class 2 and 3 are open may be fifteen).

#### 15.6.2.8 Relative offset by category

The relative offset by category field (word 2, bits 15 to 0) shall indicate on a bit-position basis, whether or not relative offset shall be supported for the corresponding Information Category (for example, if bit 14 = 1 and bit 2 = 1 and the others are set to zero, Information Category ’1110’ b and ’0010’ b frames shall be capable of using relative offset as a Sequence Recipient or a Sequence Initiator). See 9.3.3 for definition of the Information Category field.

#### 15.6.2.9 R_A_TOV

The R_A_TOV value shall be specified as a count of 1 ms increments. Therefore, a value of hex '00 00 00 0A' specifies a time period of 10 ms.

#### 15.6.2.10 E_D_TOV

When the E_D_TOV Resolution bit (word 1, bit 26) is set to zero, the E_D_TOV value shall be specified as a count of 1 ms increments. When the E_D_TOV Resolution bit is set to one, the E_D_TOV value shall be specified as a count of 1 ns increments (for example, based on the setting of the E_D_TOV Resolution bit, a value of hex '00 00 00 0A' specifies a time period of either 10 ms or 10 ns).

For PLOGI, the E_D_TOV value in the LS_ACC to the PLOGI shall be greater than or equal to the value in the PLOGI. The E_D_TOV value in the LS_ACC shall be the value used by each Nx_Port. R_A_TOV shall be a value twice the E_D_TOV value in a point-to-point topology. See 21.2.1.3 for definition of E_D_TOV.

### 15.6.3 N_Port_Name

The N_Port_Name is an eight-byte field (words 5 to 6) that identifies an FC_Port. Each Nx_Port shall provide a unique N_Port_Name within the address domain of the Fabric and associated Nx_Ports. Bits 63 to 60 specify the

--`,,```,,,,````-`-`,,`,,`,`,,`---

Copyright International Organization for Standardization
Provided by IHS under license with ISO
No reproduction or networking permitted without license from IHS Not for Resale

format of the N_Port_Name. The formats are defined in clause 14.

### 15.6.4 Node_ or Fabric_Name

Node_Name is applicable to PLOGI, PLOGI LS_ACC and FLOGI. Fabric_Name is applicable to FLOGI LS_ACC.

The Node_ or Fabric_Name is an eight-byte field (words 7 to 8) that identifies a Node or Fabric for identification purposes, such as diagnostics that is independent and unrelated to network addressing. Each Node or Fabric shall provide a unique name within the address domain of the Fabric and associated Nx_Ports. Bits 63 to 60 specify the format of the name. The formats are defined in clause 14.

### 15.6.5 Class Service Parameters

#### 15.6.5.1 Applicability

Table 222 defines the applicability, by class as well as by PLOGI, FLOGI, PLOGI LS_ACC and FLOGI LS_ACC, of the Class Service Parameters to N_Port and Fabric Login. The Class 1 and Class 6 Service parameters are given in words 9 to 12. The Class 2 Service parameters are given in words 13 to 16. The Class 3 Service parameters are given in words 17 to 20. The Class 4 Service parameters are given in words 21 to 24. The words given in the second column and in the following subclauses are relative to the start of the specific class service parameters field (see table 222)..

**Table 222 - Class Service Parameters Applicability**

| Service Parameter | Word | Bits | PLOGI and PLOGI LS_ACC Parameter applicability | | | | FLOGI Parameter applicability | | | | FLOGI LS_ACC Parameter applicability | | | |
|---|---|---|---|---|---|---|---|---|---|---|---|---|---|---|
| | | | Class | | | | Class | | | | Class | | | |
| | | | 1 [a] | 2 | 3 | 4 | 1 [a] | 2 | 3 | 4 | 1 [a] | 2 | 3 | 4 |
| Class Validity | 0 | 31 | y | y | y | y | y | y | y | y | y | y | y | y |
| Service Options | 0 | 30 to 16 | | | | | | | | | | | | |
| Intermix Mode | 0 | 30 | y | n | n | n | y | n | n | n | y | n | n | n |
| Stacked Connect-Requests | 0 | 29 to 28 | n | n | n | n | n | n | n | n | y | n | n | n |
| Sequential delivery | 0 | 27 | n | n | n | n | n | y | y | n | n | y | y | n |
| Simplex dedicated connection - obsolete | 0 | 26 | n | n | n | n | n | n | n | n | n | n | n | n |
| Camp-On - obsolete | 0 | 25 | n | n | n | n | n | n | n | n | n | n | n | n |
| Buffered Class 1 - obsolete | 0 | 24 | n | n | n | n | n | n | n | n | n | n | n | n |
| Priority/Preemption | 0 | 23 | y | y | y | y | y | y | y | y | y | y | y | y |
| Preference | 0 | 22 | n | y | y | n | n | y | y | n | n | y | y | n |
| DiffServ QoS | 0 | 21 | n | y | y | n | n | y | y | n | n | y | y | n |
| Reserved | 0 | 20 to 16 | n | n | n | n | n | n | n | n | n | n | n | n |
| Initiator Control | 0 | 15 to 0 | | | | | | | | | | | | |
| X_ID Reassignment - Obsolete | 0 | 15 to 14 | n | n | n | n | n | n | n | n | n | n | n | n |

Legend
"y" indicates yes, applicable (i.e., has meaning);
"n" indicates no, not applicable (i.e., has no meaning)

[a] The Class 1 Service Parameters shall be used for Class 6. Each has the same applicability as Class 1.

Copyright International Organization for Standardization
Provided by IHS under license with ISO
No reproduction or networking permitted without license from IHS Not for Resale

**Table 222 - Class Service Parameters Applicability (Continued)**

| Service Parameter | Word | Bits | PLOGI and PLOGI LS_ACC Parameter applicability | | | | FLOGI Parameter applicability | | | | FLOGI LS_ACC Parameter applicability | | | |
|---|---|---|---|---|---|---|---|---|---|---|---|---|---|---|
| | | | Class | | | | Class | | | | Class | | | |
| | | | 1 [a] | 2 | 3 | 4 | 1 [a] | 2 | 3 | 4 | 1 [a] | 2 | 3 | 4 |
| Initial Responder Process_Associator | 0 | 13 to 12 | y | y | y | y | n | n | n | n | n | n | n | n |
| ACK_0 capable | 0 | 11 | y | y | n | y | n | n | n | n | n | n | n | n |
| ACK_N Capable - Obsolete | 0 | 10 | n | n | n | n | n | n | n | n | n | n | n | n |
| ACK generation assistance | 0 | 9 | y | y | n | y | n | n | n | n | n | n | n | n |
| Data compression capable - obsolete | 0 | 8 | n | n | n | n | n | n | n | n | n | n | n | n |
| Data compression history buffer size - obsolete | 0 | 7 to 6 | n | n | n | n | n | n | n | n | n | n | n | n |
| Data Encryption Capable - obsolete | 0 | 5 | n | n | n | n | n | n | n | n | n | n | n | n |
| Clock Synchronization ELS capable | 0 | 4 | y | y | y | y | y | y | y | y | y | y | y | y |
| Reserved | 0 | 3 to 0 | n | n | n | n | n | n | n | n | n | n | n | n |
| Recipient Control | 1 | 31 to 16 | | | | | | | | | | | | |
| ACK_0 Capable | 1 | 31 | y | y | n | y | n | n | n | n | n | n | n | n |
| ACK_N Capable - Obsolete | 1 | 30 | n | n | n | n | n | n | n | n | n | n | n | n |
| X_ID interlock | 1 | 29 | y | y | n | y | n | n | n | n | n | n | n | n |
| Error policy support | 1 | 28 to 27 | y | y | y | y | n | n | n | n | n | n | n | n |
| Categories per Sequence | 1 | 25 to 24 | y | y | y | y | n | n | n | n | n | n | n | n |
| Data compression capable - obsolete | 1 | 23 | n | n | n | n | n | n | n | n | n | n | n | n |
| Data compression history buffer size - obsolete | 1 | 22 to 21 | n | n | n | n | n | n | n | n | n | n | n | n |
| Data decryption capable – obsolete | 1 | 20 | n | n | n | n | n | n | n | n | n | n | n | n |
| Clock Synchronization ELS capable | 1 | 19 | y | y | y | y | y | y | y | y | y | y | y | y |
| Reserved - Fabric Specific | 1 | 18 to 16 | n | n | n | n | n | n | n | n | n | n | n | n |
| Reserved | 1 | 15 to 12 | n | n | n | n | n | n | n | n | n | n | n | n |

Legend
"y" indicates yes, applicable (i.e., has meaning);
"n" indicates no, not applicable (i.e., has no meaning)

[a] The Class 1 Service Parameters shall be used for Class 6. Each has the same applicability as Class 1.

--`,,```,,,,````-`-`,,`,,`,`,,`---

Copyright International Organization for Standardization
Provided by IHS under license with ISO
No reproduction or networking permitted without license from IHS Not for Resale

**Table 222 - Class Service Parameters Applicability (Continued)**

| Service Parameter | Word | Bits | PLOGI and PLOGI LS_ACC Parameter applicability | | | | FLOGI Parameter applicability | | | | FLOGI LS_ACC Parameter applicability | | | |
|---|---|---|---|---|---|---|---|---|---|---|---|---|---|---|
| | | | Class | | | | Class | | | | Class | | | |
| | | | 1 [a] | 2 | 3 | 4 | 1 [a] | 2 | 3 | 4 | 1 [a] | 2 | 3 | 4 |
| Receive Data Field Size | 1 | 11 to 0 | y | y | y | y | n | n | n | n | n | n | n | n |
| Reserved | 2 | 31 to 24 | n | n | n | n | n | n | n | n | n | n | n | n |
| Concurrent Sequences | 2 | 23 to 16 | y | y | y | y | n | n | n | n | n | n | n | n |
| Nx_Port End-to-end Credit | 2 | 15 to 0 | y | y | n | n | n | n | n | n | n | n | n | n |
| Reserved | 3 | 31 to 24 | n | n | n | n | n | n | n | n | n | n | n | n |
| Open Sequences per Exchange | 3 | 23 to 16 | y | y | y | y | n | n | n | n | n | n | n | n |
| Reserved | 3 | 15 to 0 | n | n | n | n | n | n | n | n | n | n | n | n |
| CR_TOV | 3 | 31 to 0 | n | n | n | n | n | n | n | n | y | n | n | n |

Legend
“y” indicates yes, applicable (i.e., has meaning);
“n” indicates no, not applicable (i.e., has no meaning)

[a] The Class 1 Service Parameters shall be used for Class 6. Each has the same applicability as Class 1.

### 15.6.5.2 Payload

The Payload Class Service Parameters using FLOGI is shown in table 223.

**Table 223 - Class Service Parameters - FLOGI**

| Bits / Word | 31 .. 24 | 23 .. 16 | 15 .. 12 | 11 .. 08 | 07 .. 00 |
|---|---|---|---|---|---|
| **0** | Service Options | | Initiator Control | | |
| **1** | Recipient Control | | Reserved | | |
| **2** | Reserved | Total Concurrent Sequences | Nx_Port End-to-End credit | | |
| **3** | Reserved | Open Sequences per Exchange | Reserved | | |

Copyright International Organization for Standardization
Provided by IHS under license with ISO
No reproduction or networking permitted without license from IHS Not for Resale

The Payload Service Parameters using PLOGI and PLOGI LS_ACC is shown in table 224.

**Table 224 - Class Service Parameters - PLOGI and PLOGI LS_ACC**

| Bits / Word | 31 .. 24 | 23 .. 16 | 15 .. 00 | |
|---|---|---|---|---|
| **0** | Service Options | | Initiator Control | |
| **1** | Recipient Control | | Reserved | Receive Data Field Size |
| **2** | Reserved | Total Concurrent Sequences | Nx_Port End-to-End credit | |
| **3** | Reserved | Open Sequences per Exchange | Reserved | |

The Payload Parameters using FLOGI LS_ACC is shown in table 225.

**Table 225 - Class Service Parameters - FLOGI LS_ACC**

| Bits / Word | 31 .. 16 | 15 .. 00 |
|---|---|---|
| **0** | Service Options | Reserved |
| **1** | Recipient Control | Reserved |
| **2** | Reserved | Reserved |
| **3** | CR_TOV | |

#### 15.6.5.3 Class validity

0 = Invalid - Class not supported
1 = Valid - Class supported

The Class validity bit (word 0, bit 31) shall indicate whether this Class is supported or not. If the Class validity bit is set to zero, this set of sixteen bytes shall be ignored. If the Class validity bit is one, this Class shall be supported.

The Class 1 and Class 6 Service parameters are given in words 9 to 12. The Class 2 Service parameters are given in words 13 to 16. The Class 3 Service parameters are given in words 17 to 20. The Class 4 Service parameters are given in words 21 to 24.

NOTE There is no separate set of class service parameters for Class 6. The Class 1 service parameters are used for Class 6.

#### 15.6.5.4 Service options

##### 15.6.5.4.1 Introduction

The service options shall specify optional features of a class of service supported by the port supplying the service parameters.

##### 15.6.5.4.2 Intermix Mode

0 = Intermix not requested
1 = Intermix requested

The Intermix Mode bit (word 0, bit 30) only has meaning in Class 1 and 6. It has no meaning in Classes 2, 3, and 4.

All N_Ports and Fabrics supporting Class 1 shall support exclusive connections. An N_Port supporting exclusive

Copyright International Organization for Standardization
Provided by IHS under license with ISO
No reproduction or networking permitted without license from IHS Not for Resale

connections may only transmit and receive frames from the N_Port to which an existing Class 1 Connection is pending or established. Exclusive connections require that the Fabric transmit an F_BSY frame, as appropriate, in response to Class 2 frames and connect-request Data frames (SOFc1) issued by a third N_Port targeted for one of the two N_Ports engaged in a Class 1 Connection.

An Intermixed dedicated connection specifies that the Fabric may insert or extract Class 2 or Class 3 frames while a Class 1 Connection is established. Support for Intermix is optional by both N_Ports and Fabrics. When an N_Port performs Login with a Fabric, it shall request support for Intermix by setting bit the Intermix Mode bit to one. If the Fabric responds with bit 30 set to one in the LS_ACC, Intermix shall be functional.

For Fabric Login, table 226 specifies the meaning of the combination of the Intermix Mode bit for the requesting N_Port and the applicable F_Port.

**Table 226 - Intermix Mode Support**

| Nx_Port | Fx_Port | Meaning |
|---|---|---|
| 0 | 0 | Neither supports |
| 0 | 1 | Fabric is capable of supporting, Intermix not functional |
| 1 | 0 | Nx_Port support requested, Fabric does not support |
| 1 | 1 | Nx_Port requested, Fabric is capable of supporting, Intermix is functional |

For N_Port Login, this bit indicates that Intermix is functional between the N_Port setting this bit and the port to which it is attached. In a point-to-point topology if both N_Ports indicate Intermix support, then Intermix is functional. Otherwise, Class 1 dedicated connections shall be removed before transmission of Class 2 or Class 3 frames.

See 13.5 for Intermix requirements.

#### 15.6.5.4.3 Stacked Connect-requests

The Stack Connect-request bits (word 0, bits 29 to 28) are used in the Fabric Login procedure. They are only meaningful for Class 1 in the FLOGI LS_ACC. They are not meaningful for other classes and other Class 1 login frames. Table 227 specifies the meaning of the combination of word 0 bits 29 and 28.

**Table 227 - Stacked Connect-request support Login Bits**

| Word 0, bits 29 to 28 | Meaning |
|---|---|
| ’00’ b | Stacked Connect-request not supported |
| ’01’ b | Lock-Down Mode |
| ’10’ b | Transparent Mode |
| ’11’ b | Reserved |

Support for stacked connect-requests is optional in both a Fabric and Nx_Port. Both an Nx_Port's and Fx_Port's behavior change if stacked connect-requests are functional (See 20.5.3 and clause 26).

#### 15.6.5.4.4 Sequential delivery

0 = Out of order delivery allowed
1 = Sequential delivery requested

The Sequential delivery bit (word 0, bit 27) is only meaningful for the class 2 and 3 N_Port Class Service Parameters in Fabric Login. Out of order frame delivery in class 2 and 3 is the default function by a Fabric. It is not meaningful for Classes 1, 4 or 6 or for N_Port Login.

Copyright International Organization for Standardization
Provided by IHS under license with ISO
No reproduction or networking permitted without license from IHS Not for Resale

If this bit is set to one by an Nx_Port, it is requesting that all frames delivered to the Nx_Port requesting this function be delivered in the same order in which the frames were transmitted by the source Nx_Port. If this bit is set to one by the Fx_Port in the LS_ACC, the Fx_Port shall deliver Class 2 and 3 frames in the same order as transmitted from any one Nx_Port.

A Fabric supporting the sequential delivery feature routes Class 2 and 3 frames via a fixed route through the Fabric to provide in-order frame delivery. This feature does not imply any other alteration to the normal class of service functions (for example, F_BSY responses are still possible in Class 2 and Class 3 frames may still be discarded by the Fabric based on normal Class 2 and 3 rules).

If this bit is set to one, the Fabric guarantees the order of delivery of both Data and Link_Control (Class 2 only) frames to the Nx_Port requesting this feature in the same order in which the frames were transmitted. Table 228 specifies the meaning of the combination of the Sequential delivery bit for the requesting Nx_Port and the applicable Fx_Port.

**Table 228 - Sequential delivery support**

| Nx_Port | Fx_Port | Meaning |
|---|---|---|
| 0 | 0 | Neither supports |
| 0 | 1 | Fabric is capable of supporting, Sequential delivery is functional |
| 1 | 0 | Nx_Port support requested, Fabric does not support |
| 1 | 1 | Nx_Port requested, Fabric is capable of supporting, Sequential delivery is functional |

#### 15.6.5.4.5 Priority/Preemption

0 = Priority/Preemption is not supported
1 = Priority/Preemption is supported

See 9.5.3.

The Priority/Preemption bit (word 0, bit 23) has meaning in Class 1, 2, 3, 4 and 6.

When an Nx_Port performs Login with a Fabric, it shall request support for Priority and Preemption by setting the Priority and Preemption bit (word 0, bit 23) to one. If is set to one in the LS_ACC, then both the Nx_Port and Fabric have agreed that Priority and Preemption is available for use.

The set of values specified in table 229 give the meaning of the combination of the Priority and Preemption bit.

**Table 229 - Fabric Login Priority and Preemption Support**

| Nx_Port | Fx_Port | Meaning |
|---|---|---|
| 0 | 0 | Neither supports Priority and Preemption |
| 0 | 1 | Fabric is capable of supporting Priority and Preemption |
| 1 | 0 | Nx_Port support requested, Fabric does not support Priority and Preemption |
| 1 | 1 | Nx_Port requested, Fabric is capable of supporting Priority and Preemption, available for use |

#### 15.6.5.4.6 Preference

##### 15.6.5.4.6.1 Nx_Port

0 = non-zero CS_CTL may be tolerated
1 = non-zero CS_CTL shall be tolerated

Copyright International Organization for Standardization
Provided by IHS under license with ISO
No reproduction or networking permitted without license from IHS Not for Resale

When an Nx_Port performs Login with another Nx_Port, it shall indicate tolerance for non-zero CS_CTL within the Class of Service by set the Preference bit (word 0, bit 22) to one. The other Nx_Port indicates tolerance for non-zero CS_CTL by setting this bit to one in the LS_ACC. An Nx_Port that tolerates a non-zero CS_CTL shall not reject or otherwise deprecate a frame solely because the CS_CTL field is non-zero.

NOTE Even if an Nx_Port never intends to set the PREF bit to any value other than zero, the Nx_Port may still have reason to set the login Preference bit to one. Setting the bit to one indicates to the other Nx_Port that the Nx_Port shall accept frames with a non-zero CS_CTL field value.

In Class 2 and 3, if this bit is set to one, the Nx_Port shall tolerate the PREF field in the CS_CTL field of the Frame_Header. Tolerance for CS_CTL as a Sequence Initiator means that the PREF field may specify Preference to the Fabric. Tolerance for CS_CTL as a Sequence Recipient means that the Nx_Port shall ignore the PREF field (See 13.3.2, p and 13.4.2, p).

This Preference Bit has no meaning in Class 1, 4 and 6.

**15.6.5.4.6.2 Fx_Port**

0 = Normal delivery
1 = Preferred delivery functional

If the Preference bit (word 0, bit 22) is set to one by an Nx_Port, then it is requested that all frames transmitted by the Nx_Port requesting this function be delivered according to the setting of the PREF field in the CS_CTL field of the Frame_Header. If this bit is set to one by the Fx_Port, the Fx_Port is indicating that it shall deliver Class 2 and 3 frames transmitted by the requesting Nx_Port according to the setting of the PREF field.

NOTE An Fx_Port that responds with bit 22 set to zero may not itself support Preferred delivery, but other Fabric Elements in the path to the destination may support it. An Nx_Port may attempt Preferred delivery even if the Fx_Port does not indicate support.

If this bit is set to one, the Fabric shall deliver both Data and Link_Control (class 2 only) frames according to the setting of the PREF field in the CS_CTL field of the frame header.

The Preference bit is not meaningful for Class 1, 4 and 6.

Table 230 summarizes the function of the PREF bit for both Class 2 and Class 3.

**Table 230 - Class 2 and 3 Preference Bit Function**

| Nx_Port Word 0, Bit 22 | Fx_Port Word 0, Bit 22 | Meaning |
|---|---|---|
| 0 | 0 | Preferred delivery by the Fabric may be functional |
| 0 | 1 | Preferred delivery by the Fabric shall be functional |
| 1 | 0 | Nx_Port support requested, Preferred delivery by the Fabric may be functional |
| 1 | 1 | Nx_Port requested, Fabric agrees, Preferred delivery by the Fabric shall be functional |

Table 231 summarizes the relationship between Preferred delivery and sequential delivery for both Class 2 and

Copyright International Organization for Standardization
Provided by IHS under license with ISO
No reproduction or networking permitted without license from IHS Not for Resale

Class 3.

**Table 231 - Relationship between Preferred delivery and sequential delivery**

| Preference Functional | Sequential delivery Functional | Meaning |
|---|---|---|
| 0 | 0 | Frames may be delivered in any order |
| 0 | 1 | Frames shall be delivered to a destination in the same order received from the source, PREF is ignored |
| 1 | 0 | Frames may be delivered in any order, but frames with PREF set to one may be delivered prior to frames with PREF set to zero |
| 1 | 1 | Frames with PREF set to one shall be delivered to a destination in the same order received from the source relative to each other, and may be delivered prior to frames with PREF set to zero; frames with PREF set to zero shall also be delivered to a destination in the same order received from the source relative to each other |

#### 15.6.5.4.7 DiffServ QoS

##### 15.6.5.4.7.1 N_Port Login

0 = DiffServ QoS not supported
1 = DiffServ QoS supported

When an Nx_Port performs Login with another Nx_Port, it shall indicate support for Differentiated Services QoS by setting the DiffServ QoS bit (word 0, bit 21) to one. The other Nx_Port indicates support for Differentiated Services QoS by setting this bit to one in the LS_ACC. Support of Differentiated Services QoS as an Exchange Originator means that the CS_CTL/Priority Enable bit (F_CTL bit 17) is set to zero to indicate that the DSCP field of the CS_CTL field in the frame header (word 1, bits 29 to 24) specifies the Differentiated Services QoS policy. Support of Differentiated Services QoS as an Exchange Responder means that the CS_CTL/Priority Enable bit (F_CTL bit 17) is set to zero, indicates that the DSCP field of the CS_CTL field in the frame header (word 1, bits 29 to 24) specifies the Differentiated Services QoS policy (see 9.5.2).

The DiffServ QoS bit only has meaning for Classes 2 and 3.

##### 15.6.5.4.7.2 F_Port Login

0 = DiffServ QoS not Supported
1 = DiffServ QoS Supported

When doing Fabric Login, an Nx_Port shall request support for Differentiated Services QoS by setting the DiffServ QoS bit (word 0, bit 21) to one. If the LS_ACC reply from the Fx_Port has this bit set to one, both the Nx_Port and Fx_Port have agreed that Differentiated Services QoS is available for use.

The set of values specified in table 232 give the meaning of the combination of Word 0, bit 21 between the requesting Nx_Port and the responding Fx_Port (see 9.5.2).

Copyright International Organization for Standardization
Provided by IHS under license with ISO
No reproduction or networking permitted without license from IHS Not for Resale

The DiffServ QoS bit only has meaning for Classes 2 and 3.

**Table 232 - DiffServ QoS bit definition**

| Nx_Port | Fx_Port | Description |
|---|---|---|
| 0 | 0 | Neither supports Differentiated Services QoS |
| 0 | 1 | Fx_Port is capable of supporting Differentiated Services QoS |
| 1 | 0 | Nx_Port support requested, Fx_Port does not support Differentiated Services QoS |
| 1 | 1 | Nx_Port requested, Fx_Port is capable of supporting Differentiated Services QoS, Differentiated Services QoS is available for use |

#### 15.6.5.5 Initiator control

##### 15.6.5.5.1 Introduction

The Initiator Control Flags shall specify which protocols, policies or functions the Sequence Initiator function in the Nx_Port supplying the Service Parameters requests of the recipient or is capable of as a Sequence initiator.

##### 15.6.5.5.2 Initial Process_Associator

The definition of the Initial Process_Associator bits (word 0, bits 13 to 12) is shown in table 233.

**Table 233 - Initial Process_Associator Bits Definition**

| Word 0, bits 13 to 12 | Meaning |
|---|---|
| ’00’ b | Initial Process_Associator not supported |
| ’01’ b | Initial Process_Associator supported |
| ’10’ b | Reserved |
| ’11’ b | Initial Process_Associator required (and supported) |

Initial Process_Associator required indicates that the Nx_Port supplying this parameter requires an Association_Header at certain Sequence boundaries (see 10.4) that contains a specific initial value in the Process_Associator field. An Nx_Port that supports Initial Process_Associator shall supply an Association_Header with an initial Responder Process_Associator value at certain Sequence boundaries, such as when it originates an Exchange. If an Initial Process_Associator is required or supported, then X_ID interlock also is required in Class 1 and 2.

If the Responder Nx_Port to the PLOGI request requires an Initial Process_Associator and the Originator of the PLOGI request does not support an Initial Process_Associator, the Responder shall transmit an LS_RJT indicating the Initiator Control bits are in conflict. If the Responder Nx_Port to the PLOGI request does not support an Initial Process_Associator and the Originator of the PLOGI request has indicated that Initial Process_Associator is required, the Responder shall transmit an LS_RJT indicating the Initiator Control bits are in conflict. In either of these cases, the Nx_Ports are unable to communicate.

These bits only have meaning for PLOGI and PLOGI LS_ACC.

##### 15.6.5.5.3 ACK_0 capability

0 = ACK_0 incapable

Copyright International Organization for Standardization
Provided by IHS under license with ISO
No reproduction or networking permitted without license from IHS Not for Resale

1 = ACK_0 capable

The ACK_0 capability bit (word 0, bit 11) specifies if the Nx_Port supplying these Class Service Parameters is capable of support for ACK_0 as a Sequence Initiator for acknowledgement of an entire Sequence in either Discard or Process Exchange Error Policies. As a Sequence Initiator an Nx_Port receives and processes ACK frames in response to Data frame transmission. ACK_0 support is applicable to acknowledged class of service Sequences.

The conditions under which ACK_0 is support is defined in table 234 and described in the following text.

**Table 234 - ACK_0 Support Conditions (Initiator Control)**

| Nx_Port A Word 0, Bit 11 | Nx_Port B Word 1, Bit 31 | Nx_Port A as Sequence Initiator |
|---|---|---|
| 0 | 0 | ACK_0 not supported |
| 0 | 1 | ACK_0 not supported |
| 1 | 0 | ACK_0 not supported |
| 1 | 1 | ACK_0 supported |

If one Nx_Port (for example, Nx_Port A) is capable of receiving ACK_0 as a Sequence Initiator (word 0, bit 11 set to one) and the other Nx_Port (for example, Nx_Port B) is capable of transmitting ACK_0 as a Sequence Recipient (word 1, bit 31 set to one), ACK_0 is supported when Nx_Port A is the Sequence Initiator and Nx_Port B is the Sequence Recipient. Otherwise, ACK_0 shall not be supported while Nx_Port A is the Sequence Initiator and Nx_Port B is the Sequence Recipient. ACK_0 usage shall take precedence over ACK_1.

If ACK_0 is supported, Nx_Port A shall transmit Data frames to Nx_Port B with infinite buffering in effect and shall be able to receive ACK_0 for Sequences transmitted. If ACK_0 is supported, Nx_Port B shall support infinite buffering and be capable of transmitting ACK_0 to acknowledge an entire Sequence (See 11.2.2.3.3 and 18.4.3.2).

ACK_0 capability may be asymmetrical for a single Nx_Port (i.e., an Nx_Port may be capable processing ACK_0 as a Sequence Initiator, but not be capable of ACK_0 transmission as a Sequence Recipient). Similarly, an Nx_Port may be capable of generating ACK_0 as a Sequence Recipient, but not be capable of ACK_0 reception as a Sequence Initiator.

ACK_0 may be used for all forms of Discard Error Policies for Exchanges. ACK_0 support shall be required for Process Policy with infinite buffers Exchange Error Policy. However, any requirements regarding symmetrical or asymmetrical ACK_0 support shall be specified by the FC-4 or upper level and is outside the scope of this standard (for example, if an FC-4 only transmitted Video_Data from Nx_Port A to Nx_Port B (for example, a frame buffer), Nx_Port A need only support ACK_0 as a Sequence Initiator, whereas, Nx_Port B need only support ACK_0 as a Sequence Recipient). See 15.6.5.5.4 for additional requirements regarding the use of ACK_0.

#### 15.6.5.5.4 ACK generation assistance

0 = No ACK generation assistance is provided to Sequence Recipient.
1 = ACK generation assistance is provided to Sequence Recipient.

See 11.3.

#### 15.6.5.5.5 Clock synchronization ELS capable

0 = Initiator does not have clock synchronization ELS capability
1 = Initiator has clock synchronization ELS capability

The Clock synchronization ELS capable bit (word 0, bit 4) is only meaningful from the Clock Synchronization Server well-known address (hex 'FF FF F6'). This bit indicates support for the ELS method of Clock

--`,,```,,,,````-`-`,,`,,`,`,,`---

Copyright International Organization for Standardization
Provided by IHS under license with ISO
No reproduction or networking permitted without license from IHS Not for Resale

Synchronization. If this bit is set to zero, the Nx_Port does not support the ELS method of Clock Synchronization. If this bit is set to one, the Nx_Port is capable of generating the CSU ELS frames. See 27.2.

#### 15.6.5.6 Recipient control

##### 15.6.5.6.1 Introduction

The Recipient Control Flags shall specify which protocols, policies or functions the Recipient Initiator function in the Nx_Port supplying the Service Parameters when acting as a receiver of Data frames.

##### 15.6.5.6.2 ACK_0 capability

0 = ACK_0 incapable
1 = ACK_0 capable

The ACK_0 capability bit (word 1, bit 31) specifies that the Nx_Port supplying these Class Service Parameters may or may not capable of support for ACK_0 as a Sequence Recipient for acknowledgement of an entire Sequence in either Discard or Process Exchange Error Policies. As a Sequence Recipient an Nx_Port shall support infinite buffering and be capable of transmitting ACK_0 frames in response to Data frame transmission. ACK_0 support is applicable to acknowledged class or service Sequences.

The conditions under which ACK_0 is support is defined in table 235 and described in the following text.

**Table 235 - ACK_0 Support Conditions (Recipient Control)**

| Nx_Port A Word 0, Bit 11 | Nx_Port B Word 1, Bit 31 | Nx_Port A as Sequence Recipient |
|---|---|---|
| 0 | 0 | ACK_0 not supported |
| 0 | 1 | ACK_0 not supported |
| 1 | 0 | ACK_0 not supported |
| 1 | 1 | ACK_0 supported |

If one Nx_Port (for example, Nx_Port A) is capable of receiving ACK_0as a Sequence Initiator (Word 0, Bit 11 set to one) and the other Nx_Port (for example, Nx_Port B) is capable of transmitting ACK_0 as a Sequence Recipient (Word 1, Bit 31 set to one), then ACK_0 may be used when Nx_Port A is the Sequence Initiator and Nx_Port B is the Sequence Recipient. Otherwise, ACK_0 shall not be supported while Nx_Port A is the Sequence Initiator and Nx_Port B is the Sequence Recipient. If ACK_0 is supported, as indicated, Nx_Port A shall transmit Data frames to Nx_Port B with infinite buffering in effect and shall be able to receive ACK_0 for Sequences transmitted. If ACK_0 is supported, as indicated, Nx_Port B shall support infinite buffering and be capable of transmitting ACK_0 to acknowledge an entire Sequence (See 11.2.2.3.3 and 18.4.3.2).

ACK_0 capability may be asymmetrical for a single Nx_Port (i.e., an Nx_Port may be capable processing ACK_0 as a Sequence Initiator, but not be capable of ACK_0 transmission as a Sequence Recipient. Similarly, an Nx_Port may be capable of generating ACK_0 as a Sequence Recipient, but not be capable of ACK_0 reception as a Sequence Initiator). If an Nx_Port sets both Word 0, bit 11 and Word 1, bit 31 to one, then it is capable of ACK_0 support as either a Sequence Initiator or a Sequence Recipient.

ACK_0 may be used for all forms of Discard Error Policies for Exchanges. ACK_0 support shall be required for Process Policy with infinite buffers Exchange Error Policy. However, any requirements regarding symmetrical or asymmetrical ACK_0 support shall be specified by the FC-4 or upper level and is outside the scope of this standard (for example, if an FC-4 only transmitted Video_Data from Nx_Port A to Nx_Port B (a frame buffer), then Nx_Port A need only support ACK_0 as a Sequence Initiator, whereas, Nx_Port B need only support ACK_0 as a Sequence Recipient).

Copyright International Organization for Standardization
Provided by IHS under license with ISO
No reproduction or networking permitted without license from IHS Not for Resale

#### 15.6.5.6.3 X_ID interlock

0 = X_ID interlock not required
1 = X_ID interlock required

X_ID interlock (word 1, bit 29) only applies to Class 1 and Class 2. This bit indicates that the Nx_Port supplying this parameter requires that an interlock be used during X_ID assignment in Class 1 and 2. In X_ID assignment, the Sequence Initiator shall set the Recipient X_ID value to hex 'FF FF' in the first Data frame of a Sequence and the Recipient shall supply its X_ID in the ACK frame corresponding to the first Data frame of a Sequence. The Sequence Initiator shall not transmit additional frames until the corresponding ACK is received. Following reception of the ACK, the Sequence Initiator continues transmission of the Sequence using both assigned X_ID values (See 17.5.5).

#### 15.6.5.6.4 Error policy supported

The definition of the Error policy supported bits (word 1, bits 28 to 27) is shown in table 236.

**Table 236 - Error Policy Bits Definition**

| Word 1, bits 28 to 27 | Meaning |
|---|---|
| ’00’ b | Only discard policy supported |
| ’01’ b | Reserved |
| ’10’ b | Both discard and process policies supported |
| ’11’ b | Reserved |

These bits are set to specify the types of support possible for missing frame conditions processed by the receiver Nx_Port. The policy used for a given Exchange shall be specified as discard or process by the Exchange Originator (see 9.7.14 and 21.6.3).

In either Discard or Process policy, when a missing frame error is detected, the expected SEQ_CNT is saved in the Error SEQ_CNT field of the appropriate Sequence Status Block and a Sequence error is posted in the S_STAT field in the same Sequence Status Block for a given Exchange (OX_ID, RX_ID). Only the first error is saved.

NOTE The error status is reported by FC-2 to FC-4.

Discard policy support specifies that the Nx_Port shall be able to discard Data frames received following detection of a missing frame error condition including the frame at which the error is detected.

Except for Class 3, when the missing frame condition is detected, the Sequence Recipient shall notify the Sequence Initiator using the Abort Sequence Condition bits in F_CTL on the ACK corresponding to the frame on which the error was detected. All subsequent frames continue to be discarded and Abort Sequence indicated in the ACK frame (see 17.3.10). In one discard policy, only a single Sequence shall be discarded, whereas in the other discard policy, multiple Sequences shall be discarded (see 9.7.14 and 21.6.3).

Process policy support specifies that the Nx_Port is to able to continue processing valid Data frames following a detected missing frame error condition in the normal manner, including the frame at which the error is detected (see 21.6.3).

Copyright International Organization for Standardization
Provided by IHS under license with ISO
No reproduction or networking permitted without license from IHS Not for Resale

#### 15.6.5.6.5 Categories per Sequence

The definition of the Categories per Sequence bits (word 1, bits 25 to 24) is shown in table 237.

**Table 237 - Categories per Sequence Bits Definition**

| Word 1, bits 25 to 24 | Meaning |
|---|---|
| ’00’ b | 1 Category/Sequence |
| ’01’ b | 2 Categories/Sequence |
| ’10’ b | Reserved |
| ’11’ b | More than 2 Categories/Sequence |

The setting of these bits shall specify that the Recipient is capable of processing one, two, or more than two Information Categories (R_CTL bits 27 to 24 in the Frame_Header) in a single Sequence. Bits 25 to 24 are applicable to each Class of Service since support for an individual Class may offer different capabilities in the same Nx_Port.

When an Nx_Port is acting as a Sequence Initiator, it shall restrict the number of Information Categories per Sequence based on the Sequence Recipient's capability as specified during N_Port Login. An Nx_Port's capability for processing Information Categories in a single Sequence may prohibit that Nx_Port from communicating in certain FC-4 protocols.

Each FC-4 should allow the ability to communicate using only one Information Category per Sequence but always provide the ability to communicate using multiple Information Categories per Sequence where possible, and when performance may be enhanced.

#### 15.6.5.6.6 Clock synchronization ELS capable

0 = Recipient does not have clock synchronization ELS capability
1 = Recipient has clock synchronization ELS capability

The Clock synchronization capable bit (word 1, bit 19) indicates support for the ELS method of Clock Synchronization. If this bit is set to zero, the Nx_Port or Fabric does not support the ELS method of Clock Synchronization. If this bit is set to one, the Nx_Port or Fabric is capable of receiving CSU ELS frames and acting upon them (See 27.2).

#### 15.6.5.7 Receive Data_Field Size

The Receive Data_Field Size is a value (word 1, bits 11 to 0) that specifies the largest Data_Field Size for an FT_1 frame (see 8.5) that may be received by the Nx_Port supplying the Service Parameters as a Sequence Recipient. Values less than 256 or greater than 2 112 are invalid. Values shall be a multiple of four bytes. An Nx_Port shall support a Data Field size of at least 256 bytes.

In Class 1 and 6 the Receive Data_Field size represents the largest Data_Field size that an Nx_Port is able to receive after a dedicated connection is established. The connect-request Data_Field size is specified in the Buffer-to-Buffer Receive Data_Field size in Common Service Parameters (see 15.6.2.6).

The Receive Data_Field size for Class 2, 3 and 4 shall be equal to or less than the Buffer-to-Buffer Receive Data_Field size specified in the Common Service Parameters.

#### 15.6.5.8 Concurrent Sequences

Concurrent Sequences (word 2, bits 23 to 16) shall specify the number of Sequence Status Blocks available in the

Copyright International Organization for Standardization
Provided by IHS under license with ISO
No reproduction or networking permitted without license from IHS Not for Resale

Nx_Port supplying the Service Parameters for tracking the progress of a Sequence as a Sequence Recipient. The maximum number of Concurrent Sequences that may be specified is 255 per Nx_Port as a Recipient that may be allocated across all classes. The total number of Concurrent Recipient Sequences that may be open across all classes by a single Nx_Port is specified in the Common Service Parameter field (see 15.6.2.7). The number of concurrent sequences open is specified in table 238.

**Table 238 - Concurrent Sequences field meaning**

| Word 2, bits 23 to 16 | Meaning |
|---|---|
| hex ’00’ | Reserved |
| hex ’01’ | 1 Sequence Status Register |
| | … |
| hex ’FF’ | 255 Sequence Status Registers |

NOTE 1 If each Nx_Port specified 255 Concurrent Sequences, then the maximum number of open Sequences between the two Nx_Ports is 510 (255 as Recipient and 255 as Initiator, for each Nx_Port).

IN Class 1 and 6, the SEQ_ID values shall range from 0 to L, inclusively, where L is the value of the Concurrent Sequence field. During a Class 1 Connection an Nx_Port shall support the maximum number of Concurrent Sequences specified during Login.

In Class 2 and 3, the SEQ_ID values shall range from 0 to 255. In Class 2 an Nx_Port may respond with a P_BSY to a frame initiating a new Sequence if Nx_Port resources are not available.

In Class 4, the SEQ_ID values shall range from 0 to L, inclusively, where L is the value of the Concurrent Sequence field. During Live Class 4 circuits a Nx_Port shall support the maximum number of Concurrent Sequences specified during Login.

NOTE 2 The ability to sustain the maximum number of concurrent sequences may be limited by the available VC_Credit.

#### 15.6.5.9 End-to-end Credit

End-to-end Credit (word 2, bits 14 to 0) is the maximum number of Data frames that may be transmitted by an Nx_Port without receipt of an accompanying ACK or Link_Response frames. The minimum value of end-to-end Credit is one. The end-to-end Credit field specified is associated with the number of buffers available for holding the Data_Field of a frame and processing the contents of that Data_Field by the Nx_Port supplying the Service Parameters. End-to-end Credit is not applicable to Class 3 since ACK frames are not used.

In order to ensure frame identification integrity, end-to-end Credit is defined as a 15-bit field while SEQ_CNT is a 16-bit field. This ensures that end-to-end Credit never exceeds one-half of the maximum SEQ_CNT. Bit 15 shall be set to zero. See 18.4.

Values in the end-to-end Credit Field have the meanings defined in table 239.

**Table 239 - End-to-end Credit Field Meaning**

| Word 2, Bits 14 to 0 | Meaning |
|---|---|
| ’0000000 00000000’ b | Reserved |
| ’0000000 00000001’ b | 1 Buffer |
| . | . |
| ’1111111 11111110’ b | 32 766 Buffers |
| ’1111111 11111111’ b | 32 767 Buffers |

Copyright International Organization for Standardization
Provided by IHS under license with ISO
No reproduction or networking permitted without license from IHS Not for Resale

#### 15.6.5.10 Open Sequences per Exchange

The value of open Sequences per Exchange field (word 3, bits 23 to 16) shall specify the maximum number of Sequences that may be open at the Recipient at one time between a pair of Nx_Ports for one Exchange. The value of X+2 specifies the number of instances of Sequence Status that shall be maintained by the Recipient for a single Exchange in the Exchange Status Block. This value is used for Exchange and Sequence tracking. The value of X limits the link facility resources required for error detection and recovery. The value of X is specified in bits 23 to 16 (see clause 21).

NOTE The number of SSBs specified at X+2 to be retained in the ESB ensures that if Sequence streaming rules are followed, the ESB shall contain at least one "good" Sequence that ended normally. Another SSB position was allocated in order to allow for any race or timing conditions that might impact that "good" Sequence.

The open Sequences per Exchange field is valid for PLOGI and PLOGI LS_ACC only.

#### 15.6.5.11 CR_TOV

The CR_TOV value (word 3) shall be specified as a count of 1 ms increments. Therefore a value of hex '00 00 00 0A' specifies a time period of 10 ms. See 26.8.2 for CR_TOV usage. CR_TOV is applicable to Class 1 and 6. CR_TOV is not applicable to other Classes. CR_TOV is only meaningful in FLOGI LS_ACC.

### 15.6.6 Vendor Version Level

Vendor Version Level field (words 25 to 28) specifies vendor-specific information. If the Valid Version Level bit in the Common Service Parameters field (word 1, bit 29) is set to one, the Vendor Version Level field contains valid information. If the Valid Version Level bit is set to zero, the Vendor Version Level field is not meaningful.

### 15.6.7 Services Availability

#### 15.6.7.1 Introduction

This field returns information regarding the Fabric’s ability to route to the defined well-known addresses. It is meaningful only for FLOGI LS_ACC. Only bits 10 - 3 of word 30 are meaningful. Word 29 and bits 31 to 11 and 2 to 0 of word 30 are reserved (see 9.4.2).

#### 15.6.7.2 Multicast Server

When set to one, the Multicast Server bit (word 30, bit 10) shall indicate that the Fabric supports routing to the well-known Multicast Server address identifier (hex 'FF FF F5'). When set to zero, this bit shall indicate that the Fabric does not support routing to the well-known Multicast Server address identifier.

#### 15.6.7.3 Clock Synchronization Server

When set to one, the Clock Synchronization Server bit (word 30, bit 9) shall indicate that the Fabric supports routing to the well-known Clock Synchronization Server address identifier (hex 'FF FF F6'). When set to zero, this bit shall indicate that the Fabric does not support routing to the well-known Clock Synchronization Server address identifier.

#### 15.6.7.4 Security Key Distribution Server

When set to one, the Security Key Distribution Server bit (word 30, bit 8) shall indicate that the Fabric supports routing to the well-known Key Distribution Server address identifier (hex 'FF FF F7'). When set to zero, this bit shall indicate that the Fabric does not support routing to the well-known Key Distribution Server address identifier.

#### 15.6.7.5 Alias Server

When set to one, the Alias Server bit (word 30, bit 7) shall indicate that the Fabric supports routing to the

Copyright International Organization for Standardization
Provided by IHS under license with ISO
No reproduction or networking permitted without license from IHS Not for Resale

well-known Alias Server address identifier (hex 'FF FF F8'). When set to zero, this bit shall indicate that the Fabric does not support routing to the well-known Alias Server address identifier.

#### 15.6.7.6 Quality of Service Facilitator

When set to one, the Quality of Service Facilitator bit (word 30, bit 6) shall indicate that the Fabric supports routing to the well-known Quality of Service Facilitator address identifier (hex 'FF FF F9'). When set to zero, this bit shall indicate that the Fabric does not support routing to the well-known Quality of Service Facilitator address identifier.

#### 15.6.7.7 Management Server

When set to one, the Management Server bit (word 30, bit 5) shall indicate that the Fabric supports routing to the well-known Management Server address identifier (hex 'FF FF FA'). When set to zero, this bit shall indicate that the Fabric does not support routing to the well-known Management Server address identifier.

#### 15.6.7.8 Time Server

When set to one, the Time Server bit (word 30, bit 4) shall indicate that the Fabric supports routing to the well-known Time Server address identifier (hex 'FF FF FB'). When set to zero, this bit shall indicate that the Fabric does not support routing to the well-known Time Server address identifier.

#### 15.6.7.9 Directory Server

When set to one, the Directory Server bit (word 30, bit 3) shall indicate that the Fabric supports routing to the well-known Directory Server address identifier (hex 'FF FF FC'). When set to zero, this bit shall indicate that the Fabric does not support routing to the well-known Directory Server address identifier.

### 15.6.8 Login Extension

#### 15.6.8.1 General

If a port does not support a Login request with the Payload bit set to one, the port shall reject the Login request with an LS_RJT. The reason code shall be set to Logical Error with a reason code explanation of “Invalid Payload Length”.

If a port does not support a Login request with a non-zero Login Extension Data Length field, the port shall reject the Login request with an LS_RJT. The reason code shall be set to Logical Error with a reason code explanation of “Login Extension not supported”.

If a port receives a Login request containing a page code that it does not support, the port shall reject the Login request with an LS_RJT. The reason code shall be set to Logical Error with a reason code explanation of “Login Extension not supported”.

If a port does not support a LS_ACC reply Sequence with the Payload bit set to one, the port shall perform an explicit Logout with the port that sent the reply.

#### 15.6.8.2 Login Extension Data Length

If the Login Extension Data Length field (word 31) is non-zero, a Login Extension follows the normal payload. The Login Extension Data Length field indicates the length of the Login Extension field in words. The Payload bit (see 15.6.2.4.17) shall be set to one if this field is non-zero.

#### 15.6.8.3 Login Extension format

The Login Extension field is a sequence of zero or more Login Extension Pages. The length in words of the sequence of Login Extension Pages shall be equal to the value of the Login Extension Length field. The format of a Login Extension Page is given in Table 240. Word 0 of the first Login Extension Page, if present, is word 64 of the

--`,,```,,,,````-`-`,,`,,`,`,,`---
Copyright International Organization for Standardization
Provided by IHS under license with ISO
No reproduction or networking permitted without license from IHS Not for Resale

FLOGI/PLOGI/ACC payload.

**Table 240 - Login Extension Page format**

| Bits / Word | 31 .. 24 | 23 .. 16 | 15 .. 08 | 07 .. 00 |
|---|---|---|---|---|
| 0 | Page Length (n) | | Reserved | Page Code |
| 1 | Page Code Specific Data | | | |
| ... | | | | |
| n to 1 | | | | |

**Page Length Field:** The length in words of the following page, including the word containing the page length and page code fields.

**Page Code Field:** The Page Code field specifies the type of page as shown in table 241.

**Table 241 - Page Code Definitions**

| Page Code | Meaning |
|---|---|
| hex ’00’ to hex ’EF’ | Reserved |
| hex ’F0’ | Vendor Specific |
| hex ’F1’ to hex ’FF’ | Reserved |

**Vendor Specific Page:** The format of the Vendor Specific Page is shown in table 242.

**Table 242 - Vendor Specific Page format**

| Bits / Word | 31 .. 24 | 23 .. 16 | 15 .. 08 | 07 .. 00 |
|---|---|---|---|---|
| 0 | Page Length (n) | | Reserved | Page Code (hex ’F0’) |
| 1 | (MSB) | Vendor Identification Data | | |
| 2 | | | | (LSB) |
| 3 | Vendor Specific Data | | | |
| ... | | | | |
| n to 1 | | | | |

**Vendor Identification field:** The value of the Vendor Identification field shall be a Vendor Identifier as defined in [10], SPC-3. If the length of the Vendor Identifier is less than eight bytes, it shall be left aligned within the Vendor Identification field. The format and interpretation of the Vendor Specific Data field is vendor specific to the vendor identified by the value of the Vendor Identification field.

**Vendor Specific Data Field:** The Vendor Specific Data field contains vendor specific data and shall be padded to a word boundary.

### 15.6.9 Clock Synchronization Quality of Service

#### 15.6.9.1 N_Port Login

##### 15.6.9.1.1 Applicability

The Clock Synchronization Quality of Service (QoS) field in PLOGI ELS or LS_ACC (words 62 to 63) is only

Copyright International Organization for Standardization
Provided by IHS under license with ISO
No reproduction or networking permitted without license from IHS Not for Resale

meaningful when sent to or received from the Clock Synchronization Server (hex 'FF FF F6'). This field contains meaningful information only if either the Clock Synchronization Primitive Capable bit of the Common features field (word 1, bit 20) is set to one; or if the Clock Synchronization ELS capable bit of one of the N_Port Class Service Parameter Recipient control fields (word 1, bit 19) is set to one. If this field does not contain meaningful information, it shall be set to zero (See 27.2 and 27.3).

The Clock Synchronization QoS field is defined in table 243.

**Table 243 - N_Port Clock Synchronization QoS**

| Bits<br>Word | 31 .. 24 | 23 .. 16 | 15 .. 08 | 07 .. 00 |
|---|---|---|---|---|
| **62** | CS_QoS_Request | CS_Accuracy | CS_Implemented_MSB | CS_Implemented_LSB |
| **63** | CS_Update_Period | | | |

#### 15.6.9.1.2 CS_QoS_Request

For PLOGI and FLOGI Request, the meaning is defined in table 244. This field is not meaningful for PLOGI LS_ACC and shall be set to zero.

**Table 244 - FLOGI/PLOGI CS_QoS_Request**

| Word 62,<br>Bits 31 to 24 | Meaning |
|---|---|
| hex ’00’ | The CS_Accuracy, CS_Implemented_MSB, CS_Implemented_LSB, and CS_Update_Period fields are not meaningful in the FLOGI/PLOGI Request. |
| hex ’01’ | The CS_Accuracy, CS_Implemented_MSB, CS_Implemented_LSB, and CS_Update_Period fields contain the requested Quality of Service parameters. |
| hex ’02’ – hex ’FF’ | Reserved |

#### 15.6.9.1.3 CS_Accuracy (Mantissa and Exponent)

This field contains the CS_Accuracy_Mantissa (word 62, bits 23 to 21) and CS_Accuracy_Exponent (bits word 62, 20 to 16).

When sent to the Fabric during FLOGI, these bits indicate the accuracy that the Fabric is requested to maintain in passing along to the clients the clock synchronization value it receives from the Clock Synchronization Server (hex 'FF FF F6').

When sent to the Clock Synchronization Server (hex 'FF FF F6'), these bits indicate the requested accuracy of the clock synchronization value as it leaves the server port.

When received from the Clock Synchronization Server (hex 'FF FF F6'), these bits indicate the accuracy of the clock synchronization value as it leaves the server port. Specifically, the server shall supply a CS_Accuracy value such that the Clock Synchronization value is always within the range of:

$$T_reference \pm (0.5 + CS_Accuracy_Mantissa \times 2^{-4}) \times 2^{(CS_Accuracy_Exponent-30)},$$

where

a) T_reference is the clock reference value internal to the server
b) CS_Accuracy_Mantissa is a value from '000’ b to '111’ b'
c) CS_Accuracy_Exponent is a value from '00000’ b to '11111’ b'

Copyright International Organization for Standardization
Provided by IHS under license with ISO
No reproduction or networking permitted without license from IHS Not for Resale

Example #1, if CS_Accuracy Mantissa and Exponent are set to ’001’ b and ’01011’ b, respectively, the Clock Synchronization value as it exits the server shall always be within the range of:

T_reference ± 1,073 μsec

Example #2, if CS_Accuracy Mantissa and Exponent are set to ’111’ b and ’11000’ b, respectively, the Clock Synchronization value as it exits the server shall always be within the range of:

T_reference ± 14,65 msec

#### 15.6.9.1.4 Clock Synchronization Implemented MSB

The Clock Synchronization Implemented MSB field (word 62, bits 13 to 8) is a 6-bit value. Word 62, bits 15 to 14 are reserved and shall be set to zero.

When sent to the Clock Synchronization Server (hex 'FF FF F6') during PLOGI, these bits indicate the requested most significant bit position within the 64-bit Clock Count field in the CSU ELS Payload.

When received from the Clock Synchronization Server (hex 'FF FF F6') this field represents the most significant bit position within the 64-bit Clock Count field that contains meaningful information.

NOTE The value in the Clock Count field shall wrap around to zero when an overflow occurs from the Clock Synchronization Implemented MSB.

(for example, a value of '110111’ b indicates that the MSB of byte 1 of the Clock Count field is the highest bit that contains meaningful information).

#### 15.6.9.1.5 Clock Synchronization Implemented LSB

The Clock Synchronization Implemented LSB field (word 62, bits 13 to 8) field is a 6-bit value. Word 62, bits 7 to 6 are reserved and shall be set to zero.

When sent to the Clock Synchronization Server (hex 'FF FF F6') during PLOGI, these bits indicate the requested least significant bit position within the 64-bit Clock Count field in the CSU ELS Payload.

When received from the Clock Synchronization Server (hex 'FF FF F6'), this field represents the least significant bit position within the 64-bit Clock Count field that contains meaningful information.

(for example, a value of '001000’ b indicates that the LSB of byte 6 of the Clock Count field is the lowest bit that contains meaningful information).

#### 15.6.9.1.6 Clock Synchronization Update Period

When sent to the Clock Synchronization Server (hex 'FF FF F6'), the Clock Synchronization Update Period field (word 63) indicates the requested time, in microseconds, between consecutive updates from the Clock Synchronization server.

When received from the Clock Synchronization Server (hex 'FF FF F6'), it represents the time, in microseconds, between consecutive updates from the Clock Synchronization server.

This field is not meaningful for FLOGI and shall be set to zero.

### 15.6.9.2 Fabric Login

#### 15.6.9.2.1 Applicability

The Clock Synchronization Quality of Service field contains meaningful information only if either Word 1, bit 20 -

Copyright International Organization for Standardization
Provided by IHS under license with ISO
No reproduction or networking permitted without license from IHS Not for Resale

Clock Synchronization Primitive Capable of the Common features field is set to one, or Word 1, bit 19 - Clock Synchronization ELS capable of the Recipient control field is set to one. If this field does not contain meaningful information, it shall be set to zero (See 27.2 and 27.3).

The Fx_Port Clock Synchronization Quality of Service field is illustrated in table 245.

**Table 245 - Fx_Port Clock Synchronization QoS**

| Bits<br>Word | 31 .. 24 | 23 .. 16 | 15 .. 08 | 07 .. 00 |
|---|---|---|---|---|
| **62** | Reserved | CS_Transfer_Accuracy | CS_Implemented_MSB | CS_Implemented_LSB |
| **63** | Reserved | | | |

#### 15.6.9.2.2 CS_Transfer_Accuracy

The CS_Transfer_Accuracy field contains CS_Transfer_Accuracy_Mantissa (word 62, bits 23 to 21) and CS_Transfer_Accuracy_Exponent (word 62, bits 20 to 16).

These bits indicate the accuracy that the Fabric maintains in passing along to the clients the clock synchronization value it receives from the Clock Synchronization Server. Specifically, the Fabric shall supply a CS_Transfer_Accuracy value such that the Clock Synchronization value supplied to the clients is always within the range of:

$$(T_server + T_fabric_delay) \pm (0.5 + CS_Accuracy_Mantissa \times 2^{-4}) \times 2^{(CS_Accuracy_Exponent-30)}$$

where:

a) T_server is the value received from the Clock Synchronization Server
b) T_fabric_delay is the time from when a given value was received from the server until the corresponding value is delivered to the client
c) CS_Accuracy_Mantissa is a value from '000’ b to '111’ b'
d) CS_Accuracy_Exponent is a value from '00000’ b to '11111’ b'

Example #1, if CS_Transfer_Accuracy Mantissa and Exponent are set to ’001’ b and ’01011’ b, respectively, the Clock Synchronization value supplied to the clients shall always be within the range of:

(T_server + T_fabric_delay) ± 1,073 μs

Example #2, if CS_Transfer_Accuracy Mantissa and Exponent are set to ’111’ b and ’11000’ b, respectively, the Clock Synchronization value supplied to the clients shall always be within the range of:

(T_server + T_fabric_delay) ± 14,65 ms

#### 15.6.9.2.3 Clock Synchronization Implemented MSB

The Clock Synchronization Implemented MSB field (word 62, bits 13 to 8) is a 6-bit value that represents the most significant bit position within the 64-bit Clock Count field that contains meaningful information. Word 62, bits 15 to 14 are reserved and shall be set to zero (for example, a value of '110111' b indicates that the MSB of byte 1 of the Clock Count field is the highest bit that contains meaningful information).

This field refers to the capabilities of the Fabric in transferring the clock synchronization value that was received from the Clock Synchronization Server (hex 'FF FF F6') to the clients. It does not refer to the capabilities of the Clock Synchronization Server itself.

Copyright International Organization for Standardization
Provided by IHS under license with ISO
No reproduction or networking permitted without license from IHS Not for Resale

#### 15.6.9.2.4 Word 0, Bits 7 to 0 Clock Synchronization Implemented LSB

This Clock Synchronization Implemented LSB field (word 62, bits 5 to 0) is a 6-bit value that represents the least significant bit position within the 64-bit Clock Count field that contains meaningful information (for example, a value of '001000' b indicates that the LSB of byte 6 of the Clock Count field is the lowest bit that contains meaningful information). Word 62, bits 7 to 6 are reserved and shall be set to zero.

This field refers to the capabilities of the Fabric in transferring the clock synchronization value that was received from the Clock Synchronization Server (hex 'FF FF F6') to the clients. It does not refer to the capabilities of the Clock Synchronization Server itself.

Copyright International Organization for Standardization
Provided by IHS under license with ISO
No reproduction or networking permitted without license from IHS Not for Resale

# 16 Process Login/Logout

## 16.1 Process Login

### 16.1.1 Introduction

The Process Login (PRLI) ELS request shall be used to establish the operating environment between a group of related processes at the originating Nx_Port and a group of related processes at the responding Nx_Port.

Establishing the operating environment may include the establishment of image pairs and the exchange of Service Parameters. The establishment of image pairs is FC-4 independent and is system structure dependent. The exchange of Service Parameters is FC-4 dependent, and if required by a particular FC-4, shall be specified in the corresponding FC-4 standard.

A Process Login remains in affect until a process logout occurs. The number of concurrent Process Logins in effect at an Nx_Port is a function of the Nx_Port facilities available. Process Login is separate from N_Port Login. Process Login may be either implicit or explicit.

If the recipient Nx_Port is not logged in with the requesting port it shall reply with a LOGO ELS Sequence, or with an LS_RJT ELS Sequence with a reason code of “Unable to perform command request” and a reason code explanation of “N_Port Login required”. There are 2 types of login:

a) Implicit Process Login is a method of establishing an operating environment by means other than the explicit use of the PRLI Exchange. Specific methods of Implicit Process Login are not defined in this standard.
b) Explicit Process Login is accomplished by using the PRLI ELS Sequence within a separate Exchange to establish an operating environment.

A group of related processes is known as an image and is identified by the Process_Associator (see figure 19). The combination of the D_ID, Responder Process_Associator, S_ID and Originator Process_Associator identify the image pair (see figure 20). Either a single group or multiple groups of related processes may exist behind an Nx_Port. A single group of related processes behind an Nx_Port may be denoted by either an N_Port_ID only or N_Port_ID and Process_Associator.

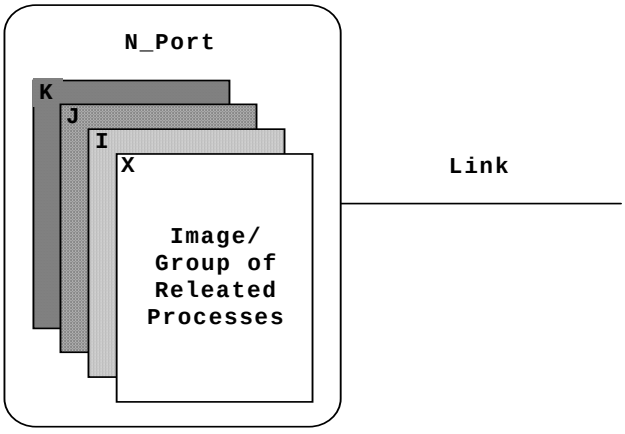


**Figure 19 - Image/Group of Related Processes**

--`,,```,,,,````-`-`,,`,,`,`,,`---

Copyright International Organization for Standardization
Provided by IHS under license with ISO
No reproduction or networking permitted without license from IHS Not for Resale

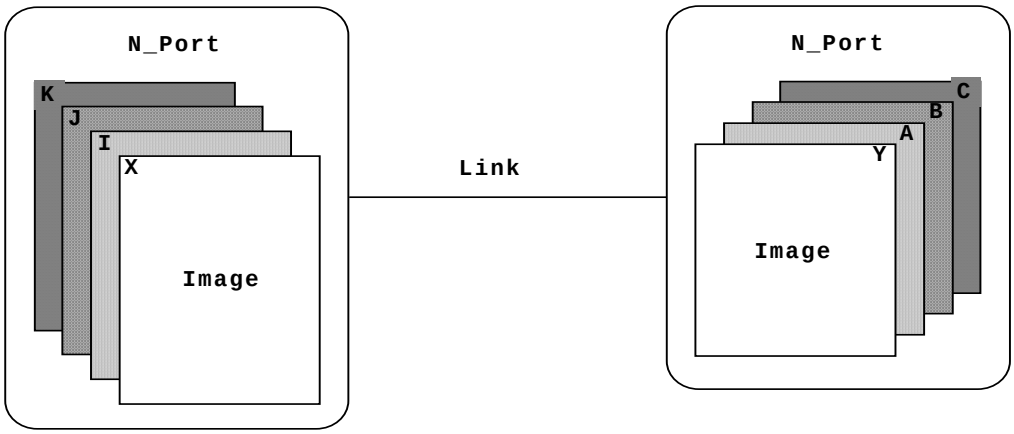


**Figure 20 - Image pairs**

PRLI, if required, is performed after N_Port Login is successful and prior to other FC-4 transfers. Examples of use of the Process Login function may include image initialization, image re-configuration, or when the Nx_Port receives an indication that the image pair no longer exists. PRLI allows each image behind an Nx_Port to separately manage its resources.

PRLI may be used to establish an operating environment between any of the following combinations of Nx_Port facilities:

a) two Nx_Ports
b) one Nx_Port and one Nx_Port image
c) two Nx_Port images

Multiple image pairs may be established with a single PRLI request and LS_ACC reply Sequence set. Failure to establish a particular image pair does not affect existing image pairs or the ability to establish other image pair.

PRLI may also be used to exchange Service Parameters without establishing image pairs. However, if an image pair is currently established, a subsequent PRLI request targeted to the same Nx_Port pair shall identify an image pair in order to modify Service Parameter settings for that image pair.

A ULP may choose to establish or modify the operating environment for multiple image pairs with a single PRLI request. This should be accomplished by specifying multiple Service Parameter pages within a single PRLI request. However, a destination Nx_Port may be unable to execute a PRLI request containing multiple Service Parameter pages. No protocol to determine the capability of a PRLI Responder to execute PRLI requests containing multiple Service Parameter pages is specified. An LS_ACC response containing a non-zero Response code is returned in the case that a PRLI Responder is unable to execute a PRLI request containing multiple Service Parameter pages (see table 113).

If a PRLI request is received for an established image pair, the existing image pair is unaffected and the PRLI request is processed normally. This allows the exchange of Service Parameters for a FC-4 not specified when the original image pair was established. PRLO shall be used to remove an established image pair.

It shall be the responsibility of the ULPs to ensure that all active operations over an image pair have been properly terminated prior to issuing a PRLI request that replaces Service Parameters. If the replacement of Service Parameters affects any active operations, all open Sequences shall be terminated by invoking Abort Sequence (ABTS) protocol. Following the completion of ABTS protocol, all open Exchanges shall be terminated by invoking either Abort Exchange (ABTX) protocol or Abort Sequence Protocol-Last Sequence (ABTS-LS) protocol. Whether or not the replacement of Service Parameters affects an active operation shall be specified for each Service Parameter by the associated FC-4.

--`,,```,,,,````-`-`,,`,,`,`,,`---

Copyright International Organization for Standardization
Provided by IHS under license with ISO
No reproduction or networking permitted without license from IHS Not for Resale

The Nx_Port originating the PRLI request shall not consider the image pair to be established until it has taken the necessary action to establish the image pair, and has received an LS_ACC reply Sequence indicating that the image pair has been established. The Nx_Port responding to the PRLI request does not consider the image pair to be established until the necessary action is taken at the Nx_Port to establish the image pair, and an LS_ACC reply Sequence is sent.

If a link error is detected when a PRLI request is received, the appropriate response, if any, is made, and the image pair is not established. If the recipient Nx_Port is not logged in with the requesting port it shall reply with a LOGO ELS Sequence, or with an LS_RJT ELS Sequence with a reason code of “Unable to perform command request” and a reason code explanation of “N_Port Login required”. If an LS_RJT is sent in response to a PRLI request for an image pair that is already established, the existing image pair is unaffected. If an LS_RJT, P_BSY, F_BSY, P_RJT, or F_RJT response is received to a PRLI request, the PRLI request may be retried until the image pair is established. The number of retries is system dependent. In the case of LS_RJT, whether or not the PRLI is retried depends on the LS_RJT reason code.

In the event that there is an error in the response to establish an image pair, the originating Nx_Port shall not assume that the requested action has or has not taken place. If the Nx_Port to the PRLI request receives no valid response, the Nx_Port should retry the request. The number of retries is system dependent.

### 16.1.2 PRLI/PRLO Relationships

#### 16.1.2.1 Introduction

Process_Associator (PA) images may exist in the following relationships. Any of these relationships may be established as a default condition using mechanisms not specified by this standard.

#### 16.1.2.2 PA not supported

If one or both of the Originator and Responder do not support PAs, no valid PA is specified in any frame of any exchange.

PRLI and PRLO commands may have no more than a single page for the Common Service Parameters and an additional single page for each additional TYPE supported by the Originator or Responder. Each page indicates that both the Originator PA and Responder PA are invalid.

The PRLI/PRLO should allow control over the enabling and disabling the specified services for the entire Nx_Port.

#### 16.1.2.3 PA required by originator, supported by responder

If the Originator requires PAs, the Originator is expected to communicate only when a valid PA is included in the initial Association_Header. The Responder provides a final Association_Header and provides other Association_Headers as required. The PA establishes a routing to a particular Originator process (or group of related processes). There is no relationship between PAs identified through one Nx_Port of a host system and another Nx_Port from the same host. The PA may additionally be used by the FC-4 in a FC-4 dependent manner.

The PRLI request pages have valid Originator PA values and invalid Responder PA values. This PRLI informs the Responder of the Originator requirements and capabilities for each TYPE of FC-4.

The PRLI and PRLO may allow control over the enabling and disabling the access of each Originator Process to the Responder Nx_Port. Communication with image pairs that have not been established is not allowed, even if both PAs exist and have the proper requirements and capabilities.

#### 16.1.2.4 PA required by responder, supported by originator

If the Responder requires PAs, the Responder is expected to communicate only when a valid Responder PA is included in the initial Association_Header. The Responder provides a final Association_Header and provides other Association_Headers as required. The PA establishes a routing to a particular Responder process. There is no

Copyright International Organization for Standardization
Provided by IHS under license with ISO
No reproduction or networking permitted without license from IHS Not for Resale

relationship between PAs identified through one Nx_Port of a host system and another Nx_Port from the same host. The PA may additionally be used by the FC-4 in a FC-4 dependent manner.

The PRLI request pages have valid Responder PA values and invalid Originator PA values. The Responder PA values may be obtained through an informative PRLI operation or by other methods not specified.

The PRLI and PRLO may allow control over the enabling and disabling the access of each Responder Process to the Originating Nx_Port. Communication with image pairs that have not been established is not allowed, even if both PAs exist and have the proper requirements and capabilities.

#### 16.1.2.5 PA required by originator and responder

Communication should only take place between an Originator and a Responder when valid PAs are specified. The PA may additionally be used by the FC-4 in a FC-4 dependent manner.

The PRLI request pages shall have valid Originator and Responder PA values defined and shall have the Establish Image Pair bit set to one in order to create image pairs in an binding manner. The Responder PA values may be obtained through an informative PRLI operation or by other methods not specified.

PRLI and PRLO pages with complete Originator PA and Responder PA information enable or disable communication between the specified image pair. PRLI pages with incomplete Originator PA and Responder PA information are invalid. Communication with image pairs that have not been established is not allowed, even if both PAs exist and have the proper requirements and capabilities.

### 16.1.3 Mode of operation

#### 16.1.3.1 Informative mode

Service Parameter information is exchanged enabling subsequent negotiation for image pair establishment.

#### 16.1.3.2 Binding mode

Information is exchanged that explicitly establishes a relationship between processes in the communicating Nx_Ports. The relationship does not allow any communication types or paths other than those established by the PRLI.

The use of a Binding PRLI page requires that the Originator have precise and detailed knowledge of the PAs and capabilities available in the Responder. That information may be obtained from Directory Services, implicitly from configuration information obtained outside the scope of FC, or by performing an Informative PRLI.

Binding or Informative mode is determined by the setting of the Establish Image Pair bit in the PRLI request page.

The Service Parameters included in a page may be either requirements or capabilities. Capabilities indicate those FC-4 properties that describe the role and state of the node in the FC-4 (e.g., channel or device for FCP-2, initiator or target for FCP-2 and similar values) Requirements indicate those FC-4 properties that shall be agreed upon by both nodes for operation with a FC-4.

### 16.1.4 Protocol

#### 16.1.4.1 PA required by originator and responder

For each PRLI request page the Originator and Responder PA validity bits are set to one and valid Originator and Responder PAs are specified. Service Parameter requirements are set to those that correspond to the combined understanding expected to be agreed to by the Responder, given the knowledge that the Originator PA has of the Responder PA. Service Parameter capabilities are those of the Originator only. The specification of Service Parameters as either requirements or capabilities is specified in the corresponding FC-4 standard.

--`,,```,,,,````-`-`,,`,,`,`,,`---

Copyright International Organization for Standardization
Provided by IHS under license with ISO
No reproduction or networking permitted without license from IHS Not for Resale

For each LS_ACC response page, the Originator and Responder PA validity bits are set to one and valid Originator and Responder PAs are specified. Service Parameter requirements are set to those that are agreed to by the Responder. Service Parameter capabilities are those of the Responder only. Error responses are possible.

Each page identifies a Binding mode PRLI operation between one image at the Originator Nx_Port and one image at the Responder Nx_Port.

#### 16.1.4.2 PA required by originator, supported by responder

For each PRLI request page the Originator PA validity bit is set to one and the Responder PA validity bit is set to zero. A valid Originator PA is specified. Service Parameter requirements are set to those that correspond to the combined understanding expected to be agreed to by the Responder, given the knowledge that the Originator PA has of the Responder PA. Service Parameter capabilities are those of the Originator only. The specification of Service Parameters as either requirements or capabilities is specified in the corresponding FC-4 standard.

For each LS_ACC response page the Originator PA validity bit is set to one and the Responder PA validity bit is set to zero. The Originator PA is returned. Service Parameter requirements are set to those that are agreed to by the Responder. Service Parameter capabilities are those of the Responder only. Error responses are possible.

Each page identifies a Binding mode PRLI operation between one image at the Originator Nx_Port and the Responder Nx_Port.

#### 16.1.4.3 PA supported by originator, required by responder

For each PRLI request page, the Originator PA validity bit is set to zero and the Responder PA validity bit is set to one. A valid Responder PA is specified. Service Parameter requirements are set to those that correspond to the combined understanding expected to be agreed to by the Responder, given the knowledge that the Originator PA has of the Responder PA. Service Parameter capabilities are those of the Originator only. The specification of Service Parameters as either requirements or capabilities is specified in the corresponding FC-4 standard.

For each LS_ACC response page, the Originator PA validity bit is set to zero and the Responder PA validity bit is set to one. The Responder PA is returned. Service Parameter requirements are set to those that are agreed to by the Responder. Service Parameter capabilities are those of the Responder only. Error responses are possible.

Each page identifies a Binding mode PRLI operation between the Originator Nx_Port and one image at the Responder Nx_Port.

## 16.2 Process Logout

The Process Logout (PRLO) ELS request shall be used to request invalidation of the operating environment between an image at the initiating Nx_Port and an image at the recipient Nx_Port. PRLO frees resources committed by a previous PRLI function. ULP behavior following successful execution of the PRLO function is specified in the corresponding FC-4 standard.

Examples of PRLO usage include image re-configuration and TYPE-specific reset of Process Login Service Parameters.

One or more TYPE-specific Service Parameter settings may be reset or image pairs removed with a single PRLO request and LS_ACC reply Sequence set. Other TYPE-specific Service Parameter settings or image pairs associated with the same or different image pairs or Nx_Ports shall be unaffected. After TYPE-specific Service Parameter settings are reset or image pair is removed, Information Units may not be sent or received for the specified FC-4 TYPE using that image pair and Nx_Port combination specified in the PRLO request.

A ULP may choose to remove multiple image pairs or reset multiple TYPE-specific Service Parameter settings with a single PRLO request. This should be accomplished by specifying multiple Logout Parameter pages within a single PRLO request. However, a destination Nx_Port may be unable to execute a PRLO request containing

Copyright International Organization for Standardization
Provided by IHS under license with ISO
No reproduction or networking permitted without license from IHS Not for Resale

multiple Logout Parameter pages. No protocol to determine the capability of a PRLO Responder to execute PRLO requests containing multiple Logout Parameter pages is specified in this standard. An LS_ACC response containing a non-zero Response code is returned in the case that a PRLO Responder is unable to execute a PRLO request containing multiple Logout Parameter pages.

If a PRLO request is received for an image pair or FC-4 TYPE that does not exist, the request is accepted, provided that no link errors are detected, and the LS_ACC response is sent.

The Nx_Port originating the PRLO request shall not consider an image pair to be removed until it receives an LS_ACC reply Sequence. The Nx_Port responding to the PRLO request shall not consider an image pair to be removed or TYPE-specific Service Parameter settings to be reset, as appropriate, until the LS_ACC reply Sequence is sent. An Nx_Port that receives a P_BSY, F_BSY, P_RJT, or F_RJT reply in response to a PRLO request may retry the PRLO request. The number of retries is system dependent.

Unless the requesting Nx_Port receives a valid response to a PRLO request, that Nx_Port shall not assume that the requested action has or has not taken place. If an Nx_Port to the PRLO request receives an invalid response, the Nx_Port should retry the request. The number of retries is vendor unique.

If the recipient Nx_Port is not logged in with the requesting port it shall reply with a LOGO ELS Sequence, or with an LS_RJT ELS Sequence with a reason code of “Unable to perform command request” and a reason code explanation of “N_Port Login required”.

PRLO operates by referencing particular PA image pairs. Pages may be mixed in any combination in a PRLO request. The PRLO LS_ACC is required to present a response page for every request page. Pages may be individually marked as being in error.

A PRLO page identifies a particular image pair to logout by marking either or both the Originator Process Associator and the Responder Process Associator. Only that image pair is logged out. No further communication for the affected FC-4(s) is possible between these two images. It is the responsibility of the ULPs to ensure that all active operations over an image pair have been orderly and properly terminated prior to issuing a PRLO request. Following PRLO execution, all active Sequences are terminated by invoking Abort Sequence (ABTS) protocol. Following the completion of ABTS protocol, all active Exchanges shall be terminated by invoking either Abort Exchange (ABTX) protocol or Abort Sequence Protocol-Last Sequence (ABTS-LS) protocol. On-going operations and states for other image pairs are not affected.

If a ULP attempts to communicate over an image pair that has not been established or has been abnormally terminated, the communication shall be acknowledged in the normal manner. The Originator may then perform a PRLO operation for the affected image pair in order to properly terminate the operating environment at both the Originator and Responder.

Copyright International Organization for Standardization
Provided by IHS under license with ISO
No reproduction or networking permitted without license from IHS Not for Resale

# 17 Exchange, Sequence and sequence count management

## 17.1 Introduction

### 17.1.1 Data frame transfer

Transfer of information between two Nx_Ports is based on transmission of a Data frame by a source Nx_Port with an ACK response frame, as appropriate (Class 1, 2, 4 and 6 only), from the destination Nx_Port or Nx_Ports receiving the Data frame to acknowledge Data frame delivery.

### 17.1.2 Sequence

A Sequence is a set of one or more related Data frames transmitted unidirectionally from one Nx_Port to another Nx_Port within an Exchange. The relationship between Sequences and Exchanges is shown in figure 21. In Class 1, 2, 4 and 6, an ACK_1 frame is transmitted in response to each Data frame or a single ACK_0 is transmitted for all Data frames of a Sequence. A Sequence is assigned a SEQ_ID by the Sequence Initiator. A Sequence shall only be initiated when an Nx_Port holds the Sequence Initiative for a given Exchange.

### 17.1.3 Streamed Sequences

This standard allows an Nx_Port to initiate a new Sequence for the same Exchange while it already has Sequences open for that Exchange. The new Sequence is termed a streamed Sequence. See 9.8 for more information regarding the assignment of SEQ_IDs for additional rules when streaming Sequences.

### 17.1.4 SEQ_CNT

Each frame within a Sequence contains a SEQ_CNT that represents the sequential number of each Data frame within one or multiple Sequences transmitted by an Exchange Originator or Responder. An ACK response frame contains a SEQ_CNT that is set equal to the Data frame SEQ_CNT to which it is responding (Classes 1, 2, 4 and 6).

### 17.1.5 Exchange

An Exchange is the fundamental mechanism for coordinating the interchange of information and data between two Nx_Ports. All Data transmission shall be part of an Exchange. This discusses Exchanges between Nx_Ports. This standard does not address the means to manage Exchanges across multiple Nx_Ports within a node.

An Exchange is a set of one or more related Sequences. Sequences for the same Exchange may flow in the same or opposite direction between a pair of Nx_Ports but not simultaneously (i.e., Data flows in one direction at a time within an Exchange for a single Nx_Port pair). An Exchange may be unidirectional or bi-directional. Within a single Exchange only one Sequence shall be active at any given time for a single initiating Nx_Port (i.e., a Sequence Initiator shall complete transmission of Data frames for a Sequence before initiating another Sequence for the same Exchange). In Classes 1 and 6, an Exchange may span multiple or successive dedicated connections at Sequence boundaries.

An Exchange may utilize multiple classes of service. Separate Sequences for the same Exchange may be transmitted in Classes 1, 2 and 6. Unless stated otherwise by the upper level, Class 3 Sequences shall not be transmitted in the same Exchange with Class 1, 2, 4 or 6 Sequences. The ability to send or receive Class 3 Sequences in the same Exchange as Class 1, 2, 4 or 6 Sequences is not a requirement of this standard. A Sequence Initiator shall not stream Sequences that are in different classes of service.

NOTE In Class 2, when Sequences are streamed, a Recipient Nx_Port may see multiple active Sequences for the same Initiator because of out of order delivery.

Copyright International Organization for Standardization
Provided by IHS under license with ISO
No reproduction or networking permitted without license from IHS Not for Resale

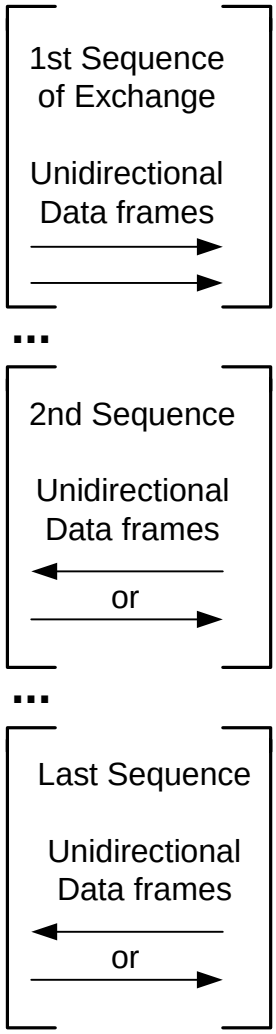


**Figure 21 - Exchange - Sequence relationship**

The Sequence Initiator shall use continuously increasing SEQ_CNT if Sequences are streamed. If the Sequence Initiator does not stream Sequences, it may also use continuously increasing SEQ_CNT to allow the Sequence Recipient to track delivery order.

In the Discard multiple Exchange Policy, the Sequence Recipient shall deliver consecutive Sequences within an Exchange in the order transmitted. The Sequence Recipient shall preserve transmission order from one Sequence to the next even if the Sequence Initiator does not use continuously increasing SEQ_CNT. Should frames arrive out of order, the Sequence Recipient may delay transmission of the last ACK until the order is re-established.

An Exchange is assigned an OX_ID by the Originator and an RX_ID by the Responder. When an Exchange is originated, there is a binding of resources in both the Originator and Responder.

An Exchange Status Block exists throughout the life of an Exchange and is located by using one or more fields of the Sequence_Qualifier (e.g., an Nx_Port's X_ID).

Copyright International Organization for Standardization
Provided by IHS under license with ISO
No reproduction or networking permitted without license from IHS Not for Resale

### 17.1.6 Sequence Initiative

The Exchange Originator is the Initiator of the first Sequence of the Exchange and holds the initiative to transmit Sequences. At the end of each Sequence of the Exchange, the Initiator of the Sequence may transfer the initiative to transmit the next Sequence to the other Nx_Port, or it may retain the initiative to transmit the next Sequence.

## 17.2 Applicability

For Classes 1,2, 3, 4 and 6, FC-2 manages:

a) Activation and deactivation of Exchanges,
b) Initiation and termination of Sequences,
c) Assignment of X_IDs,
d) Sequence Initiative,
e) Assignment of SEQ_IDs,
f) Segmentation and Reassembly,
g) Sequences,
h) SEQ_CNT of frames,
i) Detection of frame Sequence errors, and

In addition to the above, for classes 1, 2, 4, and 6 FC-2 manages notification of frame Sequence errors.

In addition to the above, for Class 4, FC-2 manages:

a) Manages Available VC credit,
b) Selects frames to send per VC with Available VC_Credit greater than zero,
c) Notification of frame Sequence errors.
d) Sequence Initiator shall assign SEQ_IDs from 0 to 255.
e) Sequence Recipient assigns the SEQ_ID to a Sequence Status Block.

For Classes 1 and 6, the Sequence Initiator shall assign SEQ_IDs from 0 to L where L is the number of Concurrent Sequences supplied by the Recipient Nx_Port.

NOTE The Sequence Recipient may assign the SEQ_ID directly to a Recipient Sequence Status Block on an indexed basis.

A Class 1 Sequence requires a Class 1 dedicated connection for the duration of the Sequence. When the Connection is terminated, all open Class 1 Sequences are terminated. A Sequence that has been abnormally terminated, is left in an indeterminate state at the Upper Level Protocol.

For Class 2, the Sequence Initiator shall assign SEQ_IDs from 0 to 255. The Sequence Recipient assigns the SEQ_ID to an available Recipient Sequence Status Block.

For Class 3, the Sequence Initiator shall assign SEQ_IDs from 0 to 255.

A Class 6 Sequence requires a Class 6 Multicast Connection for the duration of the Sequence. When the Connection is terminated, all open Class 6 Sequences are terminated. A Sequence, that has been abnormally terminated, is left in an indeterminate state at the Upper Level Protocol.

## 17.3 Exchange rules

### 17.3.1 Exchange management

The following rules apply to Exchange management:

a) Over the life of an Exchange, the Sequence Recipient shall deliver Data to FC-4 or an upper level on a Sequence basis.

Copyright International Organization for Standardization
Provided by IHS under license with ISO
No reproduction or networking permitted without license from IHS Not for Resale

b) In the Discard multiple Sequences Error Policy, each Sequence shall be delivered in the order in which the Sequence was transmitted relative to other Sequences transmitted for the Exchange.
c) In the Discard multiple Sequences Error Policy, a Sequence shall be deliverable if the Sequence completes normally and the previous Sequence, if any, is deliverable.
d) In the Discard multiple Sequences with retransmission Error Policy, each Sequence shall be delivered in the order in which the Sequence was transmitted relative to other Sequences transmitted for the Exchange.
e) In the Discard multiple Sequences with retransmission Error Policy, a Sequence shall be deliverable if the Sequence completes normally and the previous Sequence, if any, is deliverable.
f) In the Discard a single Sequence Error Policy, each Sequence shall be delivered in the order in which the Sequence was received relative to other Sequences received for the Exchange.
g) In the Discard a single Sequence Error Policy, a Sequence shall be deliverable if the Sequence completes normally without regard to the deliverability of other Sequences within the same Exchange.
h) In all Discard policies, a Sequence is complete with regard to Data content if all valid Data frames for the Sequence were received without rejectable errors being detected.
i) In Process policy with infinite buffers under Class 1 and 6 operation, a Sequence is complete with regard to Data content if at least the first and last Data frames were received as valid frames without rejectable errors being detected. For Class 3 Process policy with infinite buffers, a sequence is complete if a frame of another sequence is received or E_D_TOV expires before the last frame of the current sequence is received.
j) The ordering relationship and deliverability of Sequences between two separate Exchanges is outside the scope of this standard. Certain specific cases of Basic Link Services and Extended Link Services do, however, specify collision cases (e.g., FLOGI, PLOGI, ABTX, and RSI).

### 17.3.2 Exchange origination

The following rules apply to Exchange origination:

a) An Exchange being originated for ELSs before Login is complete or for the purpose of Login shall follow default Login parameters and special ELSs rules specified in clause 15.
b) A new Exchange, other than ELSs, may be originated if three conditions are met:
   A) The originating Nx_Port has performed Login with the destination Nx_Port.
   B) The originating Nx_Port has an OX_ID and Exchange resources available for use.
   C) The originating Nx_Port is able to initiate a new Sequence.
c) Each frame within the first Sequence of an Exchange shall set the First_Sequence F_CTL bit to one.
d) The first frame of the first Sequence of the Exchange shall specify the Error Policy for the Exchange in F_CTL bits 5 to 4 of the Frame_Header. The Exchange Error Policy shall be consistent with the error policies supported by both the Originator and Responder.
e) The Originator shall transmit the first Data frame of the Exchange with its assigned OX_ID and an unassigned RX_ID of hex 'FF FF'.
f) If the Responder requires X_ID interlock (Login), the Originator (and Sequence Initiator) shall not transmit additional Data frames for this Exchange until the ACK to the first frame of the Exchange is received. The RX_ID in the ACK frame shall be used in subsequent frames of the Exchange. Class 4 requires X_ID Interlock.
g) If the Responder (Login) does not require X_ID interlock, the Originator may transmit additional frames of the Sequence. In Class 1, 2 and 6, the Responder shall return its X_ID no later than in the ACK corresponding to the last Data frame of the Sequence. The next Sequence of the Exchange shall contain both the OX_ID and RX_ID assigned in the previous Sequence.
h) In Class 1, 2, and 4, the Sequence Initiator shall receive at least one ACK from the Recipient before the Initiator attempts to initiate subsequent Sequences for the Exchange.
i) The rules specified in Sequence initiation and termination specify the method for assigning X_IDs.

### 17.3.3 Sequence delimiters

For a more complete description of Data frame and Link_Control delimiters see tables 42 and 46. The following

--`,,```,,,,````-`-`,,`,,`,`,,`---

Copyright International Organization for Standardization
Provided by IHS under license with ISO
No reproduction or networking permitted without license from IHS Not for Resale

rules summarize the management of frame delimiters within a Sequence:

a) A Sequence shall be initiated by transmitting the first frame with a SOFix, or SOFcx.
b) Intermediate frames within a Sequence shall be transmitted with SOFnx and EOFn.
c) The Sequence shall be complete when an EOFt, EOFdt for Classes 1, 4 and 6 or EOFrt (for Class 4) has been transmitted or received for the appropriate SEQ_ID and all previous Data frames and ACKs (if any) have been accounted for by the Initiator and Recipient, respectively.

### 17.3.4 Sequence initiation

The following rules apply to Sequence initiation:

a) A new Sequence may be initiated if three conditions are met:
   A) The initiating Nx_Port holds the initiative to transmit (Sequence Initiative).
   B) The initiating Nx_Port has a SEQ_ID available for use.
   C) The total number of active Sequences initiated by the initiating Nx_Port with the Recipient Nx_Port does not exceed any of the following:
      a) total concurrent Sequences (see 15.6.2.7),
      b) concurrent Sequences per class (see 15.6.5.8),
      c) open Sequences per Exchange (see 15.6.5.10).
b) A SOFix (or a SOFcx shall start the first Data frame of the Sequence.
c) The Sequence Initiator shall assign a SEQ_ID that is unique between the Initiator and Recipient Nx_Port pair while the Sequence is open. The SEQ_ID shall not match the last SEQ_ID transmitted by the Sequence Initiator for this Exchange for the current Sequence Initiative. For streamed Sequences for the same Exchange, the Sequence Initiator shall use X+1 different subsequent SEQ_IDs where X is the number of open Sequences per Exchange so that the Exchange Status Block contains status of the last deliverable Sequence.
d) The Sequence Initiator shall not initiate the (X+1)th streamed Sequence until the first Sequence status is known (e.g., if X = 3 and the Sequence Initiator transmits SEQ_ID = 3, then 4, then 7, it shall not initiate another Sequence for the same Exchange until it resolves the completion status of SEQ_ID = 3, regardless of the completion status of SEQ_ID = 4 or 7).
e) The Sequence_Qualifier shall be unique until an open Sequence is ended normally or until the Recovery_Qualifier is determined by the Abort Sequence Protocol (ABTS).
f) In Class 2 and 3, each Data frame of the Sequence shall be limited in size to the lesser of the Fx_Port and destination Nx_Port capabilities as specified by Login.
g) In Classes 1 and 6, the connect-request frame shall be limited in size to the lesser of the Fx_Port and destination Nx_Port capabilities as specified by Login.
h) The Sequence Recipient shall supply the status of the Sequence in the format of the Sequence Status Block defined in 17.8.2 in response to a Read Sequence Status ELS request while the Sequence is active. Sequence status shall be associated with the Exchange in which the Sequence is being transmitted.
i) Frame transmission shall follow Flow Control Rules specified in clause 18 and Connection rules specified in clause 20.

### 17.3.5 Sequence management

The Sequence Recipient and the Sequence Initiator shall verify that frames received for a Sequence adhere to the items listed. If the Sequence Recipient determines that one of the following conditions is not met in Class 1, 2, 4 or 6, it shall transmit a P_RJT. If the Sequence Initiator determines that one of the following conditions is not met, it shall abort the Sequence (Abort Sequence Protocol).

a) Each frame shall contain the assigned SEQ_ID and assigned or reassigned OX_ID and RX_ID values.
b) Hex 'FF FF' shall be used for unassigned X_ID values.
c) Each frame shall indicate the Exchange Context.
d) Each frame shall indicate the Sequence Context.
e) Each frame shall contain a SEQ_CNT that follow the rules as defined in 17.3.6.
f) Frame transmission shall follow Flow Control Rules as defined in clause 18.
g) The Data Field size of each frame of the Sequence shall be less than or equal to:

--`,,```,,,,````-`-`,,`,,`,`,,`---

Copyright International Organization for Standardization
Provided by IHS under license with ISO
No reproduction or networking permitted without license from IHS Not for Resale

A) the maximum size specified by the Fabric ($SOF_{c1}$, Class 2, or 3), if present, or
B) the maximum size specified by the destination Nx_Port in the Service Parameters defined during Login, whichever is smaller.
C) the maximum size specified by the QoSR for the VC in the Class 4 circuit.

h) A Sequence shall be transmitted in one class.
i) Each Data frame in a Sequence shall be transmitted within an E_D_TOV timeout period of the previous Data frame transmitted within the same Sequence. Otherwise, a Sequence timeout shall be detected.

### 17.3.6 SEQ_CNT

Within a Data frame Sequence, SEQ_CNT is used to identify each Data frame for verification of delivery and transmission order. The following rules specify the SEQ_CNT of each frame of a Sequence:

a) The SEQ_CNT of the first Data frame of the first Sequence of the Exchange transmitted by either the Originator or Responder shall be binary zero.
b) The SEQ_CNT of each subsequent Data frame within the Sequence shall be incremented by one from the previous Data frame.
c) The SEQ_CNT of the first Data frame of a streamed Sequence shall be incremented by one from the last Data frame of the previous sent Sequence.
d) The SEQ_CNT of the first Data frame of a non-streamed Sequence may be incremented by one from the last Data frame of the previous sent Sequence or may be zero.
e) The SEQ_CNT of each Link_Response shall be set to the SEQ_CNT of the Data frame to which it is responding (Class 1, 2, 4 and 6).
f) The SEQ_CNT of each ACK_1 frame shall be set to the SEQ_CNT of the Data frame to which it is responding (Class 1, 2, 4 and 6). See 18.4.3.3 for ACK_1 rules.
g) The SEQ_CNT of each ACK_0 frame shall be set to the SEQ_CNT of the last Data frame transmitted (End_Sequence = 1) for the Sequence (Class 1, 2, 4 and 6). See 18.4.3.2 for ACK_0 rules.
h) If infinite buffers and ACK_0 is being used for Sequences in which the SEQ_CNT may wrap, frame uniqueness is not being ensured (See 15.6.5.9 and 18.4.3.2 for ACK_0 rules).
i) Within an acknowledged class of service, the SEQ_CNT of any frame shall not be reused until that frame is acknowledged.

### 17.3.7 Normal ACK processing

The following rules apply to normal ACK processing:

a) Based on N_Port Login parameters (Initiator support indicated in Initiator Control and Recipient support in Recipient Control in Class Service Parameters), if both Nx_Ports support multiple ACK forms, ACK_0 usage shall take precedence over ACK_1. ACK_0 use may be asymmetrical between two Nx_Ports (See 15.6.5.5 and 15.6.5.6).
b) Mixing ACK forms in a Sequence is not allowed.
c) ACK_0 may be used for both Discard and Process Error Policies. A single ACK_0 per Sequence shall be used to indicate successful Sequence delivery or to set Abort Sequence Condition bits to a value other than ’00’ b. ACK_0 shall not participate in end-to-end Credit management. An additional ACK_0 shall be used within a Sequence to
   A) perform X_ID interlock or
   B) respond a connect-request
d) ACK frames may be transmitted in the order in which the Data frames are processed and need not be transmitted in SEQ_CNT order, however, the History bit (bit 16) of the Parameter Field shall indicate transmission status of previous ACK frame transmission for the current Sequence.
e) The final ACK ($EOF_t$, $EOF_{dt}$ (Classes 1, 4 and 6 only), $EOF_{rt}$ (Class 4 only)) of a Sequence shall be transmitted according to the rules for normal Sequence completion in the absence of detected errors.
f) ACK_1 or an ACK_0 frame, shall be transmitted during X_ID interlock, (see 17.5.5) and in response to a connect-request (see 20.4.2).
g) If a Sequence Recipient receives a Data frame in Class 2 or 4 that falls within the SEQ_CNT range of a Recovery_Qualifier, it shall discard the Data Field of the frame and shall not deliver the Payload. The Sequence Recipient may transmit an ACK for the corresponding Data frame.

--`,,```,,,,````-`-`,,`,,`,`,,`---
Copyright International Organization for Standardization
Provided by IHS under license with ISO
No reproduction or networking permitted without license from IHS Not for Resale

h) If a Sequence Initiator receives an ACK for a Data frame in Class 2 or 4 that falls within the SEQ_CNT range of a Recovery_Qualifier, it shall discard and ignore the ACK frame.
i) See 18.4.3.2 and 18.4.3.3 for the role of acknowledgement frames (ACK) in flow control.
j) Each ACK shall be transmitted within an E_D_TOV timeout period of the event that prompts the initiative to transmit an ACK frame (i.e., when using ACK_1, it shall be transmitted within E_D_TOV of the Data frame reception). Whereas, when using ACK_0, it shall be transmitted within E_D_TOV of receiving the last Data frame of the Sequence.

### 17.3.8 Normal Sequence completion

The following rules apply to normal Sequence completion:

a) The Last Data frame of a Sequence shall be indicated by setting the F_CTL End_Sequence bit (F_CTL Bit 19) to one.
b) An Exchange Event shall be defined when the End_Sequence bit (Bit 19) = 1, and any of the following F_CTL bits are set as indicated:
   A) Sequence Initiative (Bit 16) = 1,
   B) Continue Sequence Condition (Bits 7 to 6) = 11,
   C) Last Sequence (Bit 20) = 1, or
   D) End_Connection (Bit 18) = 1.
c) A Sequence Event shall be defined when the End_Sequence bit (Bit 19) = 1, and the Continue Sequence Condition bits (Bits 7 to 6) in F_CTL are set to ’00’ b, ’01’ b, or ’10’ b in the absence of an Exchange Event.
d) In Classes 1 and 6 the Sequence Initiator shall consider a Sequence as deliverable and complete when it receives the final ACK for the Sequence (ACK with $EOF_t$ or $EOF_{dt}$ delimiter).
e) In Class 2 the Sequence Initiator shall consider a Sequence as deliverable (to the ULP) and complete when it receives the final ACK for the Sequence (ACK with $EOF_t$ delimiter). However, the Sequence Initiator shall account for all ACKs before reusing the SEQ_ID for this Exchange.
f) For Class 3 Sequences, this standard provides no deliverability guarantees.
g) A Class 1, 2, 4 or 6 Sequence shall be considered complete by the Sequence Recipient if
   A) all Data frames are received,
   B) no Sequence errors are detected, and
   C) acknowledgements, if any, prior to acknowledgment of the last Data frame received have been transmitted.
h) A Class 3 Sequence shall be considered complete by the Sequence Recipient if
   A) all Data frames are received,
   B) no Sequence errors are detected, and
   C) An $EOF_t$ terminates the last Data frame.
i) For a normally completed Sequence in Classes 1 or 6, the Sequence Recipient shall transmit an ACK frame (ACK_1 or ACK_0) with $EOF_t$ (or $EOF_{ndt}$ or $EOF_{rt}$) in response to the last Data frame of the Sequence (End_Sequence bit in F_CTL = 1) when the Sequence is deliverable. The End_Sequence bit in F_CTL of the ACK shall be set to one. The choice of transmitting $EOF_{dt}$ or $EOF_{rt}$ depends on the setting of R_C when E_C = 1.
   A) In Discard multiple Sequences Error Policy, the Sequence is deliverable when all preceding ACK frames have been transmitted and the previous Sequence, if any, is deliverable.
   B) In Discard a single Sequence Error Policy, the Sequence is deliverable when all preceding ACK frames have been transmitted without regard to a previous Sequence.
j) In Class 2, if the last Data frame (End_Sequence = 1) transmitted is the last Data frame received for the Sequence, or if the last Data frame (End_Sequence = 1) received indicates an Exchange event (item b), the Sequence Recipient shall operate in the same manner as in Class 1 as specified in item i).
k) In Class 2, if the last Data frame (End_Sequence = 1) transmitted is not the last Data frame received and the last Data frame (End_Sequence = 1) transmitted indicates a Sequence Event, the Sequence Recipient may either:
   A) withhold transmission of the ACK corresponding to the last Data frame transmitted until all previous ACKs have been transmitted and the Sequence is deliverable, or
   B) save the value of End_Sequence (Bit 19) and Continue Sequence Condition (Bits 7 to 6), and transmit the ACK corresponding to the last Data frame with $EOF_n$ with End_Sequence and Continue Sequence bits set to zeros. When the last missing Data frame of the Sequence is received and the Sequence is

Copyright International Organization for Standardization
Provided by IHS under license with ISO
No reproduction or networking permitted without license from IHS Not for Resale

deliverable, the Sequence Recipient shall transmit an ACK with EOFt with the value of End_Sequence and Continue Sequence Condition bits saved from the Data frame containing the End_Sequence bit = 1 with the SEQ_CNT and other fields that match the corresponding Data frame.

NOTE When Sequences are being streamed in Class 2 with out of order delivery, transmission of ACK (EOFn) in response to the last Data frame of the Sequence (End_Sequence = 1) avoids costing the Initiator an extra Credit of one for the last Data frame of the Sequence while the Sequence Recipient waits for the last frame to be delivered.

l) In Classes 1, 2, 4 and 6 the Sequence Initiator shall transmit the last Data frame with an EOFn.
m) In Class 3 the Sequence Initiator shall transmit the last Data frame with an EOFt.
n) In the last Data frame of a Sequence with the Sequence Initiative held, the Sequence Initiator may set the Continue Sequence bits in F_CTL to indicate that the next Sequence shall be transmitted immediately (’01’ b), soon (’10’ b), or delayed (’11’ b). If Continue Sequence bits are set to ’11’ b, then the Sequence Initiator shall wait until the final ACK (EOFt) is received before initiating a new Sequence for this Exchange.
o) In the last Data frame of a Sequence, the Sequence Initiator shall set the
   A) Sequence Initiative bit in F_CTL to 0 to hold Sequence Initiative.
   B) Sequence Initiative bit in F_CTL to 1 to transfer Sequence Initiative.
p) In Classes 1, 2, 4 and 6, the Sequence Initiative is considered to be passed to the Sequence Recipient when the Sequence Initiator receives the final ACK (EOFt) of the Sequence with the Sequence Initiative bit = 1.
q) In the last Data frame of a Class 1 or 6 Sequence, the Sequence Initiator may indicate its desire to end the dedicated connection by setting the End_Connection (bit 18 = 1) in order to begin the procedure to remove the dedicated connection (see 20.7.3).
r) After a Sequence is complete, the Sequence Recipient shall supply the status of the Sequence in the format of the Exchange Status Block defined in 17.8.1 in response to a Read Exchange Status Link Service command. Sequence status in the Exchange Status Block is available until X+2 Sequences have been completed (where X is the number of open Sequences per Exchange supported by the Sequence Recipient as specified during Login) or the Exchange is terminated.
s) In the last Data frame of a Class 4 Sequence, the Sequence Initiator may indicate its desire to deactivate the Class 4 circuit by setting the End_Connection (bit 18) = 1 and R_C (bit 8) = 0 in order to begin the procedure to deactivate the Class 4 circuit (see clause 25).
t) In the last Data frame of a Class 4 Sequence, the Sequence Initiator may request its removal of the Class 4 circuit by setting the End_Connection (bit 18) = 1 and R_C (bit 8) = 1 in order to begin the procedure to remove the Class 4 circuit (see clause 25).
u) In the last Data frame of a Class 4 Sequence, the Sequence Initiator may indicate that it requires a reply Sequence be transmitted within the existing dedicated connection by setting the Sequence Initiative bit to one and Chained_Sequence bit to one in F_CTL.

### 17.3.9 Detection of missing frames

The following methods of detecting missing frames apply to a non-streamed Sequence or multiple streamed Sequences with continuously increasing SEQ_CNT.

a) In Class 1, 4 or 6, a missing Data frame error is detected if a frame is received with a SEQ_CNT that is not one greater than the previously received frame, except when a SEQ_CNT wrap to zero occurs (e.g., SEQ_CNT = 3 received, then SEQ_CNT = 5 received; a missing frame error (SEQ_CNT = 4) is detected).
b) In Class 1, 4 or 6, a missing Data frame error due to timeout is detected by the Sequence Recipient if a partial Sequence has been received and the next expected Data frame (current SEQ_CNT+1, except when a wrap to zero occurs) is not received within an E_D_TOV timeout period.
c) In Class 2 and 3, with out of order delivery, a potentially missing Data frame is detected if a frame is received with a SEQ_CNT that is not one greater than the previously received frame, except when a SEQ_CNT wrap to zero occurs. If the potentially missing Data frame is not received within the E_D_TOV timeout period, a missing frame error is detected.
d) In Class 2, with in order delivery, a potentially missing Data frame is detected if a frame is received with a SEQ_CNT that is not one greater than the previously received frame, except when a SEQ_CNT wrap to zero occurs. If the potentially missing Data frame is not received within the E_D_TOV timeout period, a missing frame error is detected.

--`,,```,,,,````-`-`,,`,,`,`,,`---
Copyright International Organization for Standardization
Provided by IHS under license with ISO
No reproduction or networking permitted without license from IHS Not for Resale

NOTE 1 With in order delivery, a Class 2 frame may be delivered with its SEQ_CNT that is not one greater than the previously received frame, if a Class 2 frame that was transmitted earlier has been issued F_BSY or F_RJT. This frame is potentially missing, since it may be retransmitted.

e) In Class 3, with in order delivery, a missing Data frame is detected if a frame is received with a SEQ_CNT that is not one greater than the previously received frame, except when a SEQ_CNT wrap to zero occurs.
f) A Sequence Recipient may also detect missing Class 2 or 3 Data frames through the use of a missing frame window. The size of the missing frame window, W, is set by the Sequence Recipient and is not specified by this standard. A frame is considered missing by a Sequence Recipient if its SEQ_CNT is less than the highest SEQ_CNT received for that Sequence minus W. It is suggested that W be at least equal to End-to-end Credit.

NOTE 2 Fabric characteristics should be taken into account when attempting to establish a missing frame window - W. Too small a value may give false errors, whereas too large a value may create out of Credit conditions.

### 17.3.10 Sequence errors - Class 1, 2, 4 and 6

#### 17.3.10.1 Rules common to all Discard policies

Either the Sequence Initiator or the Sequence Recipient may detect errors within a Sequence.

In discard policy, the Recipient shall discard the Data Field portion of Data frames (FC-2 Header is processed) received after the point at which the error is detected and including the frame in which the error was detected. In all cases except the Stop Sequence condition, the Sequence Recipient shall discard the entire Sequence. The following rules apply.

a) The types of Sequence errors that shall be detected by an Nx_Port include:
   A) detection of a missing frame based on SEQ_CNT,
   B) detection of a missing frame based on a timeout (E_D_TOV),
   C) detection of an error within a frame (P_RJT),
   D) reception of a Reject frame (F_RJT or P_RJT) or
   E) detection of an internal malfunction.
b) If a Recipient receives a Data frame for a Sequence that the Recipient ULP wishes to stop receiving, the Recipient shall indicate the Stop Sequence condition to the Initiator by using the Abort Sequence Condition bits (’10’ b) in F_CTL. (see 21.7.3)
c) If a Recipient detects an error within a valid frame of a Sequence, it shall indicate that error to the Initiator by transmitting a P_RJT with a reason code.
d) If a Recipient receives a Data frame for an active Sequence that has previously had one or more Data frames rejected, the Recipient shall indicate that previous error to the Initiator on subsequent ACK frames using the Abort Sequence Condition bits (’01’ b) in F_CTL in the same manner as it would if a missing frame were detected.
e) If the Recipient has transmitted an ACK with the Abort Sequence Condition bits set, or a P_RJT in response to a Data frame, it shall post that information in the Sequence Status.
f) If an Initiator receives an ACK with the Abort Sequence Condition bits in F_CTL requesting Stop Sequence (’10’ b), it shall end the Sequence by transmitting the End_Sequence bit set to 1 in the next Data frame. If the last Data frame has already been transmitted, the Sequence Initiator shall not respond to the Stop Sequence request but shall notify the FC-4.
g) If an Initiator detects a missing frame, internal error, or receives an ACK with a detected rejectable condition, it shall abort the Sequence by transmitting an Abort Sequence (ABTS) Basic Link Service command (see 12.2.2).
h) If an Initiator receives an ACK with the Abort Sequence Condition bits (’01’ b) in F_CTL requesting that the Sequence be aborted, it shall abort the Sequence by transmitting an Abort Sequence (ABTS) Basic Link Service command (see 12.2.2).
i) If an Initiator receives a Reject frame (F_RJT, or P_RJT), it shall abort the Sequence by transmitting an Abort Sequence (ABTS) Basic Link Service command (see 12.2.2) if the Sequence has not been terminated by the Sequence Recipient or Fabric using an $EOF_t$ ($EOF_{dt}$) on the RJT.
j) In Class 1 and Class 6, if the Sequence Initiator detects a Sequence timeout (see 21.2.4), it shall:

Copyright International Organization for Standardization
Provided by IHS under license with ISO
No reproduction or networking permitted without license from IHS Not for Resale

A) abort the Sequence using ABTS,
B) perform the Link Reset Protocol if all active Sequences have timed out or no end-to-end Credit is available, or
C) read status from the Recipient if the current state of a Sequence is uncertain in order to determine the existence of an error condition.

End-to-end credit is not required in order to exercise option A; however, if ABTS is sent in absence of end-to-end credit, it is possible that the ABTS frame may be lost, forcing further error recovery process.

k) In Class 2 or Class 4, if the Sequence Initiator detects a Sequence timeout (see 21.2.4), it shall:
A) abort the Sequence using ABTS,
B) transmit Link Credit Reset to the Recipient if no end-to-end Credit is available, or
C) read status from the Recipient if the current state of a Sequence is uncertain in order to determine the existence of an error condition.

End-to-end credit is not required in order to exercise option A; however, if ABTS is sent in absence of end-to-end credit, it is possible that the ABTS frame may be lost, forcing further error recovery process.

#### 17.3.10.2 Discard multiple Sequences Error Policy

These rules apply to Discard multiple Sequences Error Policy and Discard multiple Sequences with Retransmission Error Policy.

a) In Classes 1 and 6, if a Sequence Recipient detects a missing frame error, or detects an internal malfunction for a Sequence within an Exchange that requested Discard multiple Sequences Error Policy, it shall request that the Sequence be aborted by setting the Abort Sequence Condition bits ('01' b) in F_CTL on the ACK corresponding to the Data frame during which the missing frame error was detected. For errors detected other than missing frame, the Abort Sequence Condition bits ('01' b) in F_CTL shall be transmitted for any subsequent ACKs transmitted. The Sequence Recipient may continue to transmit ACKs for subsequent frames of the Sequence and any subsequent streamed Sequences until the ABTS frame is received. If an ACK is transmitted for the last Data frame of a Sequence, F_CTL bits 19 (End_Sequence), 18 (End_Connection or Deactivate Class 4 circuit), 17 (Priority Enable), 16 (Sequence Initiative) and 14 (Invalidate X_ID - obsolete) settings on the Data frame shall be ignored and those bits shall be set to zero in the ACK frame in addition to bits 5 to 4 ('01' b). (see 21.7.2).
b) In Classes 1 and 6, if a Sequence Recipient detects a missing frame error, or detects an internal malfunction for a Sequence within an Exchange that requested Discard multiple Sequences with Retransmission Error Policy, it shall request that the Sequence be aborted and immediately retransmitted by setting the Abort Sequence Condition bits ('11' b) in F_CTL on the ACK corresponding to the Data frame during which the missing frame error was detected.
c) If the Sequence Recipient is unable to transmit an ACK with the same SEQ_ID as the Sequence that requires retransmission, the Sequence Recipient shall follow the rules for Discard multiple Sequences Error Policy (bits 5 to 4 set to '01' b).
d) For errors detected other than missing frame, the Abort Sequence Condition bits ('11' b) in F_CTL shall be transmitted for any subsequent ACKs transmitted. The Sequence Recipient may continue to transmit ACKs for subsequent frames of the Sequence and any subsequent streamed Sequences until it receives a new Sequence ($SOF_{ix}$) with the F_CTL Retransmission bit set to one, or an ABTS frame is received. If an ACK is transmitted for the last Data frame of a Sequence, F_CTL bits 19 (End_Sequence), 18 (End_Connection or Deactivate Class 4 circuit), 17 (Priority Enable), 16 (Sequence Initiative) and 14 (Invalidate X_ID - obsolete) settings on the Data frame shall be ignored and those bits shall be set to zero in the ACK frame in addition to bits 5 to 4 ('11' b).
e) If the Sequence Recipient is unable to support Discard multiple Sequences with Retransmission Error Policy, it shall follow the rules for Discard multiple Sequences Error Policy (bits 5 to 4 set to '01' b). If the Sequence Initiator is unable to determine the correct Sequence boundary to begin retransmission, it shall either transmit the ABTS frame or Read Exchange Status (RES). (see 21.7.2).
f) In Class 2 or 4, if a Sequence Recipient detects a missing frame error, transmits a P_RJT, or detects an internal malfunction for a Sequence within an Exchange that requested Discard multiple Sequences Error Policy, it shall request that the Sequence be aborted by setting the Abort Sequence Condition bits ('01' b)

Copyright International Organization for Standardization
Provided by IHS under license with ISO
No reproduction or networking permitted without license from IHS Not for Resale

in F_CTL on the ACK corresponding to the Data frame during which the missing frame error was detected. For detected errors other than missing frame, the Abort Sequence Condition bits (’01’ b) in F_CTL shall be transmitted for any subsequent ACKs transmitted. The Sequence Recipient may continue to transmit ACKs for subsequent frames of the Sequence and any subsequent streamed Sequences until the ABTS frame is received. Any ACKs transmitted for frames in this Sequence or any subsequent Sequences shall continue to set the Abort Sequence Condition bits to ’01’ b (see 21.7.2). The last ACK for the Sequence in error shall be transmitted as described under normal Sequence completion.

g) In Classes 1 and 6, if a Sequence Initiator receives an ACK with the Abort Sequence Condition bits (’11’ b) in F_CTL requesting that the Sequence be retransmitted, it shall begin retransmission of the first non-deliverable Sequence by starting a new Sequence and setting the F_CTL Retransmission bit (F_CTL bit 9) set to one until it has received at least one ACK that indicates that the retransmitted Sequence has been successfully initiated by the Recipient. If the Sequence Initiator is unable to determine the correct Sequence boundary to begin retransmission, it shall either transmit the ABTS frame to abort the Sequence or Read Exchange Status using the RES ELSs request (see 21.7.2.3).

#### 17.3.10.3 Discard a single Sequence Error Policy

In Classes 1, 2, 4 and 6, if a Sequence Recipient detects a missing frame error, or detects an internal malfunction for a Sequence within an Exchange that requested Discard a single Sequence Error Policy, it shall request that the Sequence be aborted by setting the Abort Sequence Condition bits to ’01’b in F_CTL on the ACK corresponding to the Data frame during which the missing frame error was detected. For errors detected other than missing frame, the Abort Sequence Condition bits ’01’b in F_CTL shall be transmitted for any subsequent ACKs transmitted for this Sequence.

The Sequence Recipient may continue to transmit ACKs for subsequent frames of the Sequence until the ABTS frame is received. However, it shall not continue to set the Abort Sequence Condition bits in any subsequent streamed Sequences. If the final ACK (EOFt) to the Sequence is transmitted, F_CTL bits 19, 18, 17, 16, and 14 settings on the Data frame shall be ignored and shall be set to zero in the ACK frame, and bits 5 to 4 shall be set to '01'b in the ACK frame (see 21.7.2).

#### 17.3.10.4 Process with infinite buffers Error Policy

In process policy, the Recipient shall ignore errors detected on intermediate frames, or timeout errors such that ABTS is not requested. However, such errors shall be reported to an upper level.

If a Recipient detects an internal error related to a Sequence, or it detects that the first or last frame of a Sequence is missing, it shall request that the Sequence be aborted by setting the Abort Sequence Condition bits (’01’ b) in F_CTL on subsequent ACK frames. The Recipient shall continue to respond in the same manner as defined under Discard a single Sequence Error Policy.

NOTE Missing last Data frame is detected by the Sequence timeout.

If a Sequence Recipient detects an error within a valid frame of a Sequence, it shall indicate that error to the Initiator by transmitting a P_RJT with a reason code.

### 17.3.11 Sequence errors - Class 3

#### 17.3.11.1 Rules common to all discard policies

The Sequence Recipient may only detect errors within a Sequence.

In both Discard policies, the Sequence Recipient shall discard Sequences in the same manner as in Classes 1, 2 and 6 with the exception that an ACK indication of Abort Sequence shall not be transmitted. In discard policy, the Recipient shall discard frames received after the point at which the error is detected. Individual FC-4s or upper levels may recover the entire Sequence or only that portion after which the error is detected.

Copyright International Organization for Standardization
Provided by IHS under license with ISO
No reproduction or networking permitted without license from IHS Not for Resale

a) The types of errors that shall be detected by an Nx_Port are:
   A) detection of a missing frame based on timeout, or
   B) detection of an internal malfunction.
b) If a Recipient detects an internal error, it shall abnormally terminate the Sequence, post the appropriate status, and notify the FC-4 or upper level. One or more Sequences shall not be delivered based on single or multiple Sequence discard Error Policy.
c) If a Recipient detects a missing frame, it shall abnormally terminate the Sequence, post the appropriate status, and notify the FC-4 or upper level. One or more Sequences shall not be delivered based on single or multiple Sequence discard Error Policy.
d) In the Discard multiple Sequences Error Policy in Class 3, the Sequence Recipient shall not be required to utilize a timeout value of R_A_TOV following detection of a missing frame. Therefore, frames may be discarded for an Exchange forever if the Sequence Initiator does not utilize other detection mechanisms.
e) Notification of the Sequence error condition to the Initiator is the responsibility of the FC-4 or upper level.

#### 17.3.11.2 Process with infinite buffers Error Policy

In process Policy, the Recipient shall ignore errors detected on all frames, or timeout errors. However, such errors shall be reported to an upper level.

NOTE Ignoring an error on the first frame of a Sequence or an Exchange may cause the frame to be delivered to the wrong Recipient.

### 17.3.12 Sequence Status Rules

The following rules summarize handling of Sequence Status Block processing:

a) The Sequence Initiator shall consider a Sequence open and active after transmission of the first frame of the Sequence. The Sequence shall remain active until the Sequence Initiator has transmitted the last frame of the Sequence. The Sequence Initiator shall consider the Sequence open until
   A) it receives the ACK ($EOF_t$),
   B) BA_ACC is received to an ABTS frame,
   C) a Read Sequence Status or Read Exchange Status indicates normal or abnormal completion,
   D) the Link Reset Primitive Sequence is received or transmitted during a dedicated connection,
   E) the Exchange is aborted using the ABTX Link Service request, or
   F) a Logout Link Service request is completed.
b) A Sequence shall be considered open and active, and an Sequence Status Block opened, by the Sequence Recipient when any frame in a Sequence is received for the first Sequence of a new Exchange as indicated in F_CTL bit 21. An Exchange Status Block is opened at the same time and the Exchange becomes active.
c) A Sequence shall be considered open and active, and a Sequence Status Block opened, by the Sequence Recipient when any frame in a Sequence is received for an open Exchange.
d) If the Sequence Recipient transmits an ACK frame with the Abort Sequence Condition bits other than ’00’ b, it shall post that status in the Sequence Status Block status.
e) If a Sequence completes normally and is deliverable, its status shall be posted in the Sequence Status Block.
f) If a Sequence completes abnormally by the Abort Sequence Protocol, its status shall be posted in the Sequence Status Block.
g) The Exchange Status Block shall be updated with Sequence Status information when the Sequence becomes abnormally complete, or normally complete.

### 17.3.13 Exchange termination

a) The last Sequence of the Exchange shall be indicated by setting the F_CTL Last_Sequence bit = 1 in the last Data frame of a Sequence. The Last_Sequence bit may be set to 1 prior to the last Data frame; once it has been = 1, it shall remain set for the remainder of the Sequence.
b) The Exchange shall be terminated when the last Sequence is completed by normal Sequence completion rules.

Copyright International Organization for Standardization
Provided by IHS under license with ISO
No reproduction or networking permitted without license from IHS Not for Resale

c) An Exchange may be abnormally terminated using the ABTX ELSs request. A Recovery_Qualifier range timeout may be required in Class 2 and 3.
d) An Exchange shall be abnormally terminated following Logout with the other Nx_Port involved in the Exchange (either Originator or Responder). A Recovery_Qualifier range timeout may be required in Class 2, 3 or 4.

#### 17.3.14 Exchange Status Rules

The following rules summarize handling of Exchange Status Block processing:

a) An Exchange shall be considered active, and an Exchange Status Block opened, by the Originator after transmission of the first frame of the first Sequence.
b) An Exchange shall be considered active, and an Exchange Status Block opened, by the Sequence Recipient when any frame in the first Sequence is received.
c) An Exchange shall be remain open until
   A) the last Sequence of the Exchange completes normally,
   B) a timeout period of E_D_TOV has elapsed since the last Sequence of the Exchange completed abnormally, or
   C) the Exchange is successfully aborted with ABTX (that includes a Recovery_Qualifier timeout, if necessary).
d) When an Exchange is no longer open, it shall be complete and the Exchange resources associated with the Exchange, including the Exchange Status Block, are available for reuse. An upper level may choose to complete an Exchange with an interlocked protocol in order to ensure that both the Originator and Responder agree that the Exchange is complete. Such a protocol is outside the scope of this standard.
e) The contents of an Exchange Status Block may be made available (RES request) until the resource is allocated to another Exchange.

## 17.4 Exchange management

An Exchange is managed as a series of Sequences of data frames. The Originator of the Exchange shall transmit the initial Sequence. F_CTL bits within the Frame_Header identify and manage Sequences within an Exchange.

Following the initial Sequence, subsequent Sequences may be transmitted by either the Originator or the Responder facilities based on which facility holds the Sequence Initiative.

## 17.5 Exchange origination

#### 17.5.1 Introduction

The key facilities, functions, and events involved in the origination of an Exchange by both the Originator and Responder are diagrammed in figure 22. An Exchange for Data transfer may be originated with a destination Nx_Port following N_Port Login. Login provides information necessary for managing an Exchange and Sequences (e.g., class, the number of Concurrent Sequences, Credit, and Receive Data Field Size). An Exchange is originated through the initiation of a Sequence. The rules in 17.3.2 specify the requirements for originating an Exchange.

--`,,```,,,,````-`-`,,`,,`,`,,`---
Copyright International Organization for Standardization
Provided by IHS under license with ISO
No reproduction or networking permitted without license from IHS Not for Resale

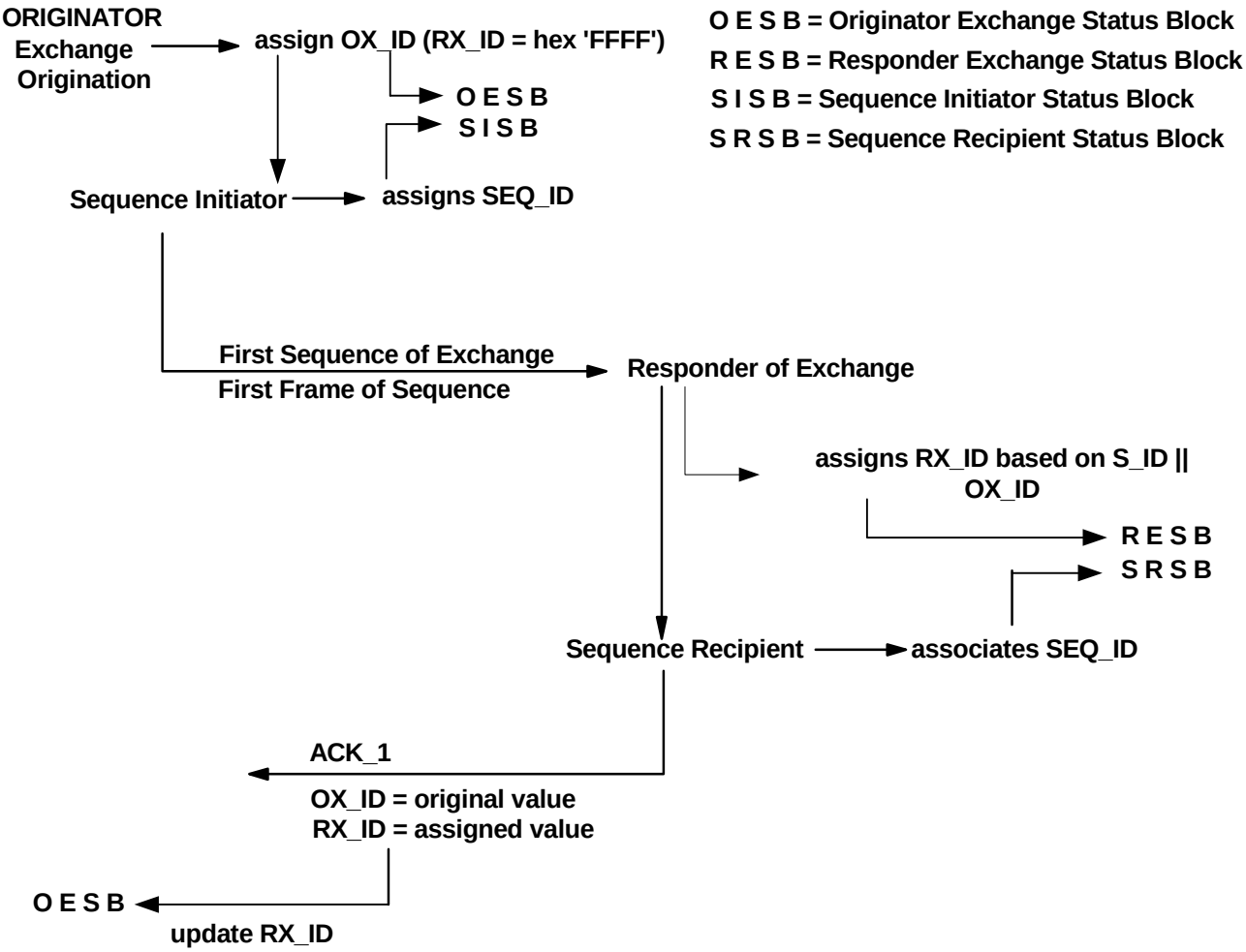


**Figure 22 - Exchange origination**

### 17.5.2 Exchange Originator

When an Exchange is originated by an Nx_Port, that Nx_Port shall assign an OX_ID unique to that Originator or Originator-Responder pair. An Originator Exchange Status Block is allocated and bound to the Exchange and other link facilities in that Nx_Port for the duration of the Exchange. All frames associated with that Exchange contain the assigned OX_ID. The Originator in the Originator Exchange Status Block shall track the status of the Exchange. See 17.6.2 for more information on unique Sequence_Qualifiers.

Each frame within the Exchange transmitted by the Originator shall be identified with an F_CTL bit designating the frame as Originator generated (Exchange Context). The OX_ID, together with Originator-Responder pair information (if required) provides the mechanism for tracking Sequences for multiple concurrent Exchanges that may be active at the same time.

NOTE Since the Originator assigns the OX_ID, assignment may be organized to provide efficient processing within the Nx_Port. The Originator may choose to qualify the OX_ID using the Originator-Responder pair.

### 17.5.3 Exchange Responder

The destination Nx_Port shall be designated as the Responder for the duration of the Exchange. When the destination Nx_Port receives the first Sequence of the Exchange, that Nx_Port shall assign an RX_ID to the newly established Exchange. This RX_ID is associated with the OX_ID from a given S_ID to a Responder Exchange

--`,,```,,,,````-`-`,,`,,`,`,,`---

Copyright International Organization for Standardization
Provided by IHS under license with ISO
No reproduction or networking permitted without license from IHS Not for Resale

Status Block (S_ID||OX_ID). See 17.6.2 for more information on unique Sequence_Qualifiers.

In Class 1, 2 or 4, the assigned RX_ID shall be transmitted to the Originator on the ACK frame responding to the last Data frame of the Sequence or earlier, if possible. In a Class 3 bi-directional Exchange, the assigned RX_ID shall be transmitted to the Originator in the first Data frame transmitted by the Responder. If the Sequence Recipient has specified X_ID interlock during Login, the RX_ID shall be assigned in the ACK to the first Data frame of the Sequence. The Originator shall withhold additional frame transmission for the Exchange until the ACK is received. The Responder Exchange_ID provides the mechanism for tracking Sequences for multiple concurrent Exchanges from multiple S_IDs or the same S_ID.

NOTE Since the Responder assigns the RX_ID, assignment may be organized to provide efficient processing within the Nx_Port.

Each frame within the Exchange transmitted by the Responder is identified with an F_CTL bit designating the frame as Responder generated (Exchange Context). Each frame within the Exchange transmitted by the Responder is identified with the assigned RX_ID. The Responder in the Responder Exchange Status Block shall track the status of the Exchange.

### 17.5.4 X_ID assignment

In the first frame of an Exchange, the Originator shall set the OX_ID to an assigned value and the RX_ID value to hex 'FF FF' (unassigned). When the Responder receives the first Sequence of an Exchange, it shall assign an RX_ID and shall return the RX_ID in the ACK frame sent in response to the last Data frame in the Sequence, or in an earlier ACK (Class 1, 2 and 4). In a Class 3 bi-directional Exchange, the Responder shall assign an RX_ID in the first Data frame transmitted.

For all remaining frames within the Exchange, the OX_ID and RX_ID fields retain these assigned values.

### 17.5.5 X_ID interlock

X_ID interlock is only applicable to Classes 1, 2 and 4. When an Nx_Port initiates a Sequence with an Nx_Port that has specified during Login that X_ID interlock is required and the Recipient's X_ID is invalid or unassigned, the initiating Nx_Port shall transmit the first frame of the Sequence with the Recipient's X_ID set to hex 'FF FF' and shall withhold transmission of additional frames until the corresponding ACK with an assigned X_ID has been received from the Recipient. The assigned X_ID is then used in all subsequent frames in the Sequence.

## 17.6 Sequence management

### 17.6.1 Open and active Sequences

From the standpoint of the Sequence Initiator, a Sequence is active for the period of time from the allocation of the SSB for the sequence until the end of the last Data frame of the Sequence is transmitted. In Class 1 and Class 6, the Sequence Initiator considers the Sequence open until the ACK with EOFt (EOFdt) is received, the Sequence is aborted by performing the ABTS Protocol, or the Sequence is abnormally terminated. In Class 2, the Sequence Initiator considers the Sequence open until the ACK with EOFt is received, the Sequence is aborted by performing the ABTS Protocol, or the Sequence is abnormally terminated. In Class 3, the Sequence Initiator considers the Sequence open until the deliverability is confirmed or an R_A_TOV timeout period has expired. The determination of deliverability of Class 3 Sequences is beyond the scope of this standard, which provides no deliverability guarantees for Class 3 Sequences. In Class 4, the Sequence Initiator considers the Sequence open until the ACK with EOFt (EOFdt or EOFrt) is received, the Sequence is aborted by performing the ABTS Protocol, or the Sequence is abnormally terminated. In Classes 1, 2, 4 and 6, from the standpoint of the Sequence Recipient, a Sequence is open and active from the time any Data frame is received until the EOFt (EOFdt) is transmitted in the ACK to the last Data frame, or abnormal termination of the Sequence.

In Classes 1, 2, 4 and 6, from the standpoint of the Sequence Recipient, a Sequence is active from the time any Data frame is received until the EOFt (EOFdt) is transmitted in the ACK to the last Data frame, or abnormal

Copyright International Organization for Standardization
Provided by IHS under license with ISO
No reproduction or networking permitted without license from IHS Not for Resale

termination of the Sequence. In Class 3, from the standpoint of the Sequence Recipient, a Sequence is open and active from the time the initiating Data frame is received until all Data frames up to the frame containing EOFt have been received.

### 17.6.2 Sequence_Qualifier management

The Sequence Initiator assigns a SEQ_ID that is unique between the Nx_Port pair of the Initiator and the Recipient at the time it is assigned and until the Sequence is complete. When the Sequence completes normally or abnormally, the SEQ_ID is reusable by the Sequence Initiator for any Sequence_Qualifier, including the same Recipient and Exchange providing that Sequence rules are followed (see 17.3.4). If a Sequence is aborted using the Abort Sequence Protocol or the ABTX Link Service request, a Recovery_Qualifier range may be specified by the Sequence Recipient (see 21.7.2), however, SEQ_ID shall not be included in the Recovery_Qualifier.

### 17.6.3 Sequence initiative and termination

When a Sequence is terminated in a normal manner, the last Data frame transmitted by the Sequence Initiator is used to identify two conditions:

a) Sequence initiative, and
b) Sequence termination.

### 17.6.4 Transfer of Sequence Initiative

The Sequence Initiator controls which Nx_Port shall be allowed to initiate the next Sequence for the Exchange. The Sequence Initiator may hold the initiative to transmit the next Sequence of the Exchange or the Sequence Initiator may transfer the initiative to transmit the next Sequence of the Exchange. The decision to hold or transfer initiative shall be indicated by Sequence_Initiative bit in F_CTL.

In Classes 1, 2, 4 and 6, the Sequence Recipient shall not consider Sequence Initiative to have been passed until the Sequence that passes the Sequence Initiative is completed successfully and the ACK (EOFt) has been transmitted with the Sequence Initiative bit (F_CTL bit 16) = 1.

In Classes 1, 2, 4 and 6, when a Sequence Initiator detects a Data frame from the Recipient for an Exchange in which it holds the Sequence Initiative, it shall transmit a P_RJT with a reason code of “Exchange error” (excluding the ABTS frame). In Class 3, when a Sequence Initiator detects a Data frame (excluding the ABTS frame) from the Recipient for an Exchange in which it holds the Sequence Initiative, it shall abnormally terminate the Exchange and discard all frames for the Exchange.

When the Sequence Initiator is ending the current Sequence, it shall set the End_Sequence bit in F_CTL to one on the last Data frame of the Sequence.

### 17.6.5 Sequence Termination

#### 17.6.5.1 Introduction

Setting the End_Sequence bit in F_CTL to one indicates the last Data frame transmitted by the Sequence Initiator. The Sequence is terminated by either the Initiator or the Recipient transmitting a frame terminated by EOFt. The Sequence Initiator is in control of terminating the Sequence. Transmission of the EOFt may occur in two ways:

a) In Classes 1, 2, 4 and 6 the Sequence Recipient transmits an ACK frame of ACK_1 or ACK_0 with EOFt (or EOFdt or EOFrt as appropriate) in response to the last Data frame received for the Sequence.
b) In Class 3, the Sequence Initiator transmits the last Data frame of the Sequence with EOFt.

#### 17.6.5.2 Class 1 and Class 6

When EOFt or EOFdt has been transmitted or received by each Nx_Port, the appropriate Exchange Status Block associated with the Sequence shall be updated in each Nx_Port to indicate that the Sequence was completed and

--`,,```,,,,````-`-`,,`,,`,`,,`---

Copyright International Organization for Standardization
Provided by IHS under license with ISO
No reproduction or networking permitted without license from IHS Not for Resale

whether the Originator or Responder facility holds the Sequence Initiative. Link facilities associated with the Sequence (including Sequence Status Block) are released and available for other use.

#### 17.6.5.3 Class 2

Since Class 2 frames may be delivered out of order, Sequence processing is only completed after all frames (both Data and ACK) have been received, accounted for, and processed by the respective Nx_Ports.

When the Sequence is completed by each Nx_Port, the appropriate Exchange Status Block associated with the Sequence shall be updated in each Nx_Port to indicate that the Sequence was completed and whether the Originator or Responder facility holds the Sequence Initiative. Link facilities associated with the Sequence (including the Sequence Status Block) are released and available for other use.

NOTE Since ACKs may arrive out of order, the Sequence Initiator may receive the ACK that contains EOFt before ACKs for the same Sequence. The Sequence Initiator shall not consider the Sequence normally terminated until it has received the final ACK (see 21.7.4).

#### 17.6.5.4 Class 3

The Sequence Initiator shall terminate the last Data frame of the Sequence with EOFt. Acknowledgment of Sequence completion is the responsibility of the Upper Level Protocol.

When the Sequence is completed by each Nx_Port, the appropriate Exchange Status Block associated with the Sequence shall be updated in each Nx_Port to indicate that the Sequence was completed and whether the Originator or Responder facility holds the Sequence Initiative. Link facilities associated with the Sequence (including Sequence Status Block) are released and available for other use.

#### 17.6.5.5 Class 4

When EOFt, EOFdt, or EOFrt has been transmitted or received by each Nx_Port, the appropriate Exchange Status Block associated with the Sequence shall be updated in each Nx_Port to indicate that the Sequence was completed and whether the Originator or Responder facility holds the Sequence Initiative. Link facilities associated with the Sequence (including Sequence Status Block) are released and available for other use.

#### 17.6.5.6 Continue Sequence Condition

When an Nx_Port terminates a Sequence yet holds the Sequence Initiative, the Nx_Port may include additional information regarding the timing of the next Sequence. The Nx_Port uses the Continue Sequence Condition bits in F_CTL to indicate that the next Sequence is being transmitted immediately (’01’ b), soon (’10’ b), or delayed (’11’ b). The estimate of time is based on the time to remove and reestablish a Class 1 and Class 6 Connection, regardless of which class is being used.

#### 17.6.5.7 End_Sequence

When the Sequence Initiator is ending the current Sequence, it shall set the End_Sequence bit in F_CTL to one on the last Data frame of the Sequence.

## 17.7 Exchange termination

### 17.7.1 Normal termination

Either the Originator or the Responder may terminate an Exchange. The facility terminating the Exchange shall indicate Exchange termination on the last Sequence of the Exchange by setting the Last_Sequence bit in F_CTL on the last frame, or earlier, if possible, of the last Sequence of the Exchange.

The Sequence shall be terminated according to normal Sequence termination rules. When the last Sequence of

Copyright International Organization for Standardization
Provided by IHS under license with ISO
No reproduction or networking permitted without license from IHS Not for Resale

the Exchange is terminated normally, the Exchange shall also be terminated. The OX_ID and RX_ID and associated Exchange Status Blocks are released and available for reuse.Abnormal termination

### 17.7.2 Abnormal termination

Either the Originator or the Responder may abnormally terminate an Exchange by using the Abort Exchange Protocol or Sequence timeout of the last Sequence of the Exchange. In general, reception of a reject frame with an action code of 2 as specified in 11.2.3 is not recoverable at the Sequence level and aborting of the Exchange is probable. Other reasons to abort an Exchange are FC-4 protocol dependent and not defined in this standard.

When a Class 4 Virtual Circuit is terminated by the END Link_Control Command, all exchanges active at that time that are using the Virtual Circuit shall be terminated. The Fabric, or either Nx_Port may originate the END Link_Control Command.

## 17.8 Status blocks

### 17.8.1 Exchange Status Block

An Exchange Status Block (see table 246) is a logical construct used to associate the OX_ID, RX_ID, D_ID and S_ID of an Exchange. The Status Block is used throughout the Exchange to track the progress of the Exchange and identify which Nx_Port holds the initiative to transmit Sequences.

The Exchange Status Block shall record Exchange status information and Sequence Status for a number of Sequences received as a Sequence Recipient. The Exchange Status Block is supplied in the RES Link Services request. Equivalent information to track transmitted Sequences is required by the Sequence Initiator for internal tracking of Exchange progress but is not required to be supplied to any other Nx_Port. The Sequence Status is stored in the Exchange Status Block in the oldest to newest order. The oldest Sequence is dropped out of the ESB when new Sequence status is added.

**Table 246 - Exchange Status Block**

| Item | Size - Bytes |
|---|---|
| Priority (if enabled) (LSB is preemption flag) | 1 |
| OX_ID | 2 |
| RX_ID | 2 |
| Originator Address Identifier (High order byte - reserved) | 4 |
| Responder Address Identifier (High order byte - reserved) | 4 |
| E_STAT | 4 |
| Reserved | 4 |
| Service Parameters | 112 |
| Oldest Sequence Status (SSB format-first 8 bytes) | 8 |
| Intermediate Sequence Status (SSB format-first 8 bytes) | X (see 15.6.5.10) x 8 |
| Newest Sequence Status (SSB format-first 8 bytes) | 8 |

Copyright International Organization for Standardization
Provided by IHS under license with ISO
No reproduction or networking permitted without license from IHS Not for Resale

The E_STAT Field shall be defined as follows:

a) Bit 31 - ESB owner
   0 = Originator
   1 = Responder
b) Bit 30 - Sequence Initiative
   0 = Other port holds initiative
   1 = This port holds initiative
c) Bit 29 - Completion
   0 = open
   1 = complete
d) Bit 28 - Ending Condition
   0 = normal
   1 = abnormal
e) Bit 27 - Error type
   0 = Exchange aborted with ABTX
   1 = Exchange abnormally terminated
   Error type is only valid when bit 28 is set to one.
f) Bit 26 - Recovery_Qualifier
   0 = none
   1 = Active
g) Bits 25 to 24 - Exchange Error Policy
   0 0 = Abort, Discard multiple Sequences
   0 1 = Abort, Discard a single Sequence
   1 0 = Process with infinite buffers
   1 1 = Discard multiple Sequences with immediate retransmission
h) Bit 23 - Originator X_ID invalid
   0 = Originator X_ID valid
   1 = Originator X_ID invalid
   X_ID validity status reflects the completion condition of the newest Sequence Status Block contained in the ESB.
i) Bit 22 - Responder X_ID invalid
   0 = Responder X_ID valid
   1 = Responder X_ID invalid
   X_ID validity status reflects the completion condition of the newest Sequence Status Block contained in the ESB.
j) Bit 21 - Priority in Use
   0 = Priority/Preemption not used for this exchange
   1 = Priority/Preemption in use for this exchange
   Priority/Preemption not enabled reflects the condition set F_CTL for $SOF_{c1}$ and $SOF_{ix}$ frames.
k) Bits 20 to 0 - Reserved

### 17.8.2 Sequence Status Block

A Sequence Status Block (see table 247) is a logical construct used to track the progress of a single Sequence by an FC_Port on a frame by frame basis. A Sequence Status Block shall be opened and maintained by the Sequence Recipient for each Sequence received in order to support the RSS Link Service request. Information equivalent to an SSB is required for the Sequence Initiator to track Sequence progress internally, but is not required to be supplied to any other FC_Port.

Copyright International Organization for Standardization
Provided by IHS under license with ISO
No reproduction or networking permitted without license from IHS Not for Resale

**Table 247 - Sequence Status Block**

| Item | Size - Bytes |
|---|---|
| SEQ_ID | 1 |
| reserved | 1 |
| Lowest SEQ_CNT | 2 |
| Highest SEQ_CNT | 2 |
| S_STAT | 2 |
| Error SEQ_CNT | 2 |
| Frame header Word 1, bits 31 to 24 | 1 |
| Frame header Word 4, bits 31 to 16 | 2 |
| RX_ID | 2 |
| reserved | 2 |

**Frame header Word 1, Bits 31 to 24**: When priority is in use, this field shall contain the current priority. When priority is not in use, this field shall contain the CS_CTL field.

**Frame header Word 4, Bits 31 to 16**: This field shall contain the OX_ID.

The S_STAT field shall be defined as follows:

a) Bit 15 - Sequence context
   0 = Initiator
   1 = Recipient
b) Bit 14 - active
   0 = not active
   1 = active
c) Reserved
d) Bit 12 - Ending Condition
   0 = normal
   1 = abnormal
   Bits 11 to 7 clarify the reason for an abnormal ending condition.
e) Bits 11 to 10 ACK, Abort Sequence condition
   0 0 = continue
   0 1 = Abort Sequence requested
   1 0 = Stop Sequence requested
   1 1 = Abort with Retransmission requested
f) Bit 9 - ABTS protocol performed
   0 = ABTS not completed
   1 = ABTS completed by Recipient
g) Bit 8 - Retransmission performed
   0 = Retransmission not completed
   1 = Retransmission completed by Recipient

--`,,```,,,,````-`-`,,`,,`,`,,`---
Copyright International Organization for Standardization
Provided by IHS under license with ISO
No reproduction or networking permitted without license from IHS Not for Resale

h) Bit 7 - Sequence time-out
   0 = Sequence not timed-out
   1 = Sequence timed-out by Recipient (E_D_TOV)
i) Bit 6 - P_RJT transmitted
   0 = P_RJT not transmitted
   1 = P_RJT transmitted
j) Bits 5 to 4 Class
   0 0 = reserved
   0 1 = Class 1
   1 0 = Class 2
   1 1 = Class 3
k) Bit 3 - ACK (EOFt) transmitted
   0 = ACK (EOFt) not transmitted
   1 = ACK (EOFt or EOFdt) transmitted
l) Bits 2 to 0 - Reserved

Copyright International Organization for Standardization
Provided by IHS under license with ISO
No reproduction or networking permitted without license from IHS Not for Resale

# 18 Flow control management

## 18.1 Introduction

Flow control is the FC-2 control process to pace the flow of frames between Nx_Ports, an Nx_Port and the Fabric and within the Fabric to prevent overrun at the receiver. Flow control is managed using end-to-end Credit, end-to-end Credit_CNT, ACK_1, buffer-to-buffer Credit, buffer-to-buffer Credit_CNT, and R_RDY along with other frames.

Flow control is managed between Nx_Ports (end-to-end) and between FC_Ports (buffer-to-buffer). Flow control management has variations dependent upon the class.

Class 1 and 6 frames use end-to-end flow control. Class 1 and 6/SOFc1 frames and Class 2 frames use both end-to-end and buffer-to-buffer flow controls. Class 3 uses only buffer-to-buffer flow control. Table 248 shows the applicability of the flow control mechanisms to each class. Buffer-to-buffer flow control management for Class 4 is specified in clause 25. Class 4 uses VC_RDYs as specified in clause 25 and end-to-end for flow control.

**Table 248 - Flow control applicability**

| Flow Control methodology and mechanism | Class 1 and 6 without SOFc1 | Connect-request frame with SOFc1 | Class 2 | Class 3 | Class 4 |
|---|---|---|---|---|---|
| end-to-end | Yes | Yes | Yes | No | Yes |
| buffer-to-buffer | No | Yes | Yes | Yes | No (uses VC_RDYs) |
| ACK_1 | Yes | Yes | Yes | No | Yes |
| ACK_0 | One per Sequence | Yes | One per Sequence | No | One per Sequence |
| R_RDY | No | Yes | Yes | Yes | No (uses VC_RDYs) |
| F_BSY (DF)[a] | No | Yes | Yes | No | No |
| F_BSY (LC)[b] | No | No | Yes | No | No |
| F_RJT | No | Yes | Yes | No | Yes |
| P_BSY | No | Yes | Yes | No | No |
| P_RJT | Yes | Yes | Yes | No | Yes |

[a] F_BSY (DF) indicates F_BSY response to a Data frame.

[b] F_BSY (LC) indicates F_BSY response to a Link_Control frame except P_BSY

--`,,```,,,,````-`-`,,`,,`,`,,`---

Copyright International Organization for Standardization
Provided by IHS under license with ISO
No reproduction or networking permitted without license from IHS Not for Resale

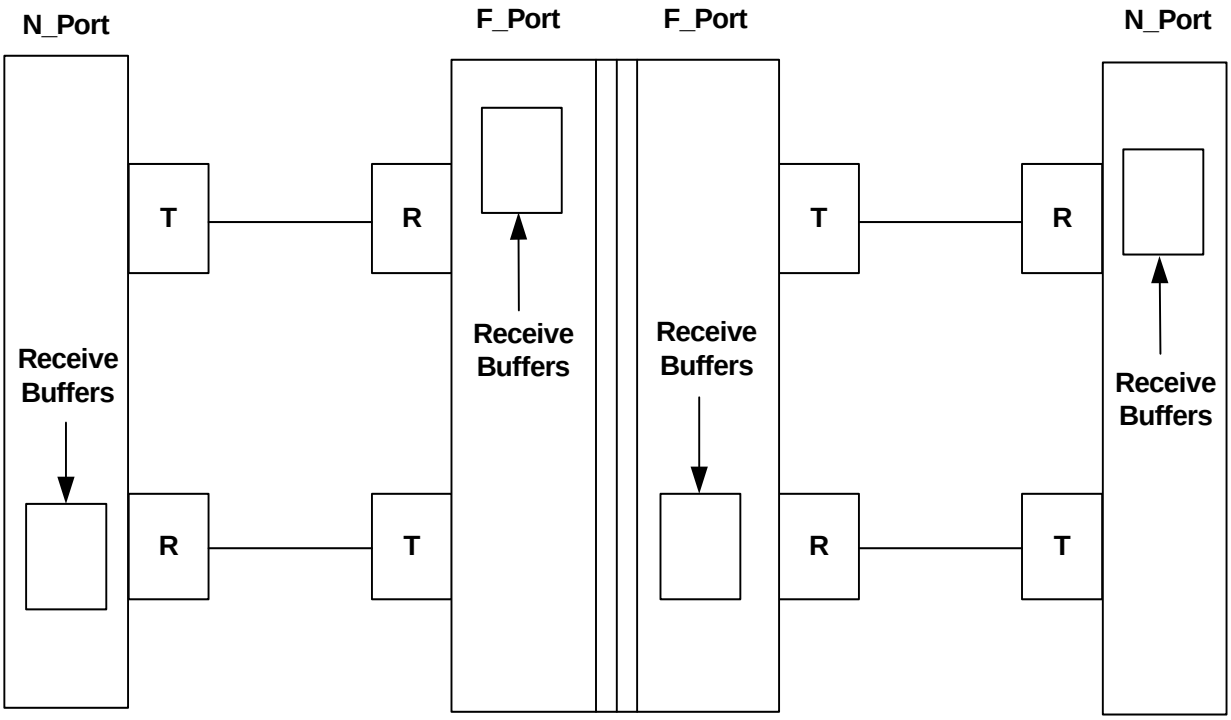


**Figure 23 - Physical flow control model for Classes 1, 2, 3 and 6**

## 18.2 Physical flow control model for Classes 1, 2, 3 and 6

The physical flow control model for Classes 1, 2, 3 and 6 is illustrated in figure 23 (See clause 25 for the Class 4 physical flow control model). The model consists of following physical components:

a) Each Nx_Port with Class 1 and 6/SOFc1 and Connectionless receive buffers.
b) Each Fx_Port to which an Nx_Port is attached, with its receive buffers for Connectionless service. Class 1 buffers internal to the fabric used for Intermix are transparent to the FC-2 flow control.

Class 1 and 6 buffering requirements during Intermix are specified in 13.5. Class 2, Class 3 and Class 1 SOFc1 frames shall share connectionless buffers. Table 249 shows the use of buffers for end-to-end and buffer-to-buffer flow controls.

Buffer-to-buffer flow control management for Class 4 is specified in clause 18.

**Table 249 - Buffer participation**

| Participating buffers | end-to-end flow control | buffer-to-buffer flow control |
|---|---|---|
| Class 1[a] and 6 buffers | Class 1 and 6 frames | - |
| connectionless buffers | Class 2 frames | Class 2, Class 3 and Class 1 and 6/SOFc1 frames |
| Class 4 buffers | Class 4 frames | Uses VC_RDYs |
| [a] Participation of Class 1 buffers in the Fabric during Intermix is transparent to flow control. | | |

Copyright International Organization for Standardization
Provided by IHS under license with ISO
No reproduction or networking permitted without license from IHS Not for Resale

## 18.3 Credit and Credit_Count

### 18.3.1 Introduction

Credit is the number of receive buffers available to a transmitting FC_Port. Two types of Credits used in flow control are:

a) End-to-end Credit (EE_Credit) - between communicating Nx_Ports
b) buffer-to-buffer Credit (BB_Credit) - between adjacent FC_Ports

### 18.3.2 Credit_Count management

The Sequence Initiator manages the Credit_Count. The Credit_Count management is internal to the Sequence Initiator and is transparent to the other port involved in the Sequence. The Credit_Count may be managed either by increasing or decreasing starting with an appropriate value.

### 18.3.3 Management by increasing the Credit_Count

To manage the increasing Credit_Count, the Credit_Count is initialized to zero and increased by a specified value (see tables 250, 251, and 252) to a maximum value given by the Credit. The Credit_Count in this case represents the number of outstanding Data frames that have not been acknowledged by the Sequence Recipient. The Credit_Count is a positive integer and shall not exceed the value of Credit to avoid the possibility of overflow at the receiver. The Credit_Count shall not be decreased below zero.

### 18.3.4 Management by decreasing the Credit_Count

To manage the decreasing Credit_Count, the Credit_Count is initialized to the value of the Credit and decreased to the minimum value of zero. The Credit_Count in this case represents the number of Data frames that may be sent without the possibility of causing overflow at the receiver. The Credit_Count is a positive integer and shall not be decreased below zero. (see 18.5.10)

### 18.3.5 Credit_Count types

Corresponding to two types of Credits listed above, two types of Credit_Counts used are:

a) End-to-end Credit_Count (EE_Credit_CNT)
b) buffer-to-buffer Credit_Count (BB_Credit _CNT)

### 18.3.6 Usage

The Nx_Port transmitting Class 1, 2 or 6 Data frames shall use the end-to-end Credit allocated by the receiving Nx_Port for end-to-end flow control and manage the corresponding end-to-end Credit_Count. Class 3 Data frames do not participate in end-to-end flow control. When an FC_Port is transmitting Data frames or Link_Control frames, it shall use BB_Credit allocated by the receiving FC_Port for buffer-to-buffer flow control and manage the corresponding BB_Credit_Count.

## 18.4 End-to-end flow control

### 18.4.1 End-to-end management rules

End-to-end flow control is an FC-2 control process to pace the flow of frames between Nx_Ports. An Nx_Port pair in Class 1, 2, 4 or 6 uses end-to-end flow control.

End-to-end flow control is performed with EE_Credit_CNT and EE_Credit as the controlling parameter.

End-to-end management rules are given in following subclauses for those cases where no error occurs.

Copyright International Organization for Standardization
Provided by IHS under license with ISO
No reproduction or networking permitted without license from IHS Not for Resale

Management of EE_Credit_CNT is summarized in table 250. The EE_Credit recovery is specified in 18.4.9.

**Table 250 - End-to-end flow control management**

| Activity | EE_Credit_CNT (Nx_Port only) |
|---|---|
| Nx_Port transmits a Classes 1, 2, and 6 Data frame | Increment EE_Credit_CNT by one |
| Nx_Port transmits an LCR | And reinitializes End-to-end Credit for the destination Nx_Port to its Login value. |
| Nx_Port receives F_BSY (DF), F_RJT, P_BSY, or P_RJT | Decrement EE_Credit_CNT by one |
| Nx_Port receives F_BSY (LC) | N/A |
| Nx_Port receives ACK_1 (Parameter field: History bit = 1, ACK_CNT = 1 | Decrement EE_Credit_CNT by one |
| Nx_Port receives ACK_1 (Parameter field: History bit = 0, ACK_CNT = 1) | subtract 1 for current SEQ_CNT of the ACK_1 and also subtract all unacknowledged lower SEQ_CNTs (see 11.2.2.3) |
| Nx_Port receives ACK_0 (Parameter field: History bit = 0, ACK_CNT = 0) | N/A (see 11.2.2.3) |
| Nx_Port receives Data frame (Class 1, Class 2 or Class 3) | N/A |
| Nx_Port receives an LCR | N/A[a] |
| Nx_Port transmits a Class 3 Data frame | N/A |
| Nx_Port transmits P_BSY or P_RJT | N/A |
| Nx_Port transmits ACK | N/A |
| Legend:<br>N/A = Not applicable | |
| [a] On receipt of LCR, the Sequence Recipient resets buffer (see 11.2.4) | |

### 18.4.2 Sequence Initiator

The following rules apply to the Sequence initiator:

a) The Sequence Initiator is responsible for managing EE_Credit_CNT across all active Sequences.
b) The Sequence Initiator shall not transmit a Data frame other than the ABTS Basic Link Service unless the allocated EE_Credit is greater than zero and the EE_Credit_CNT is less than this EE_Credit.
c) In Class 1, 2 or 6, the value of the EE_Credit_CNT = 0 at the end of N_Port Login, N_Port Relogin, or Link Credit Reset (see 11.2.4).
d) In Class 1 and 6, the EE_Credit_CNT is set to one, on transmitting Class 1 and 6/SOFc1 frame. It is incremented by one for each subsequent Class 1 and 6 Data frame transmitted. In the case of ACK_0 usage, EE_Credit_CNT management is not applicable.
e) The EE_Credit_CNT is incremented by one for each Class 2 Data frame transmitted. In the case of ACK_0 usage, EE_Credit_CNT management is not applicable.
f) The Sequence Initiator decrements the EE_Credit_CNT by a value of one for each ACK_1 (parameter field: History bit = 1, ACK_CNT = 1), F_BSY(DF), F_RJT, P_BSY, or P_RJT received.
g) For an ACK_1 (parameter field: History bit = 0, ACK_CNT = 1) received, the Sequence Initiator decrements the EE_Credit_CNT by a value of one for the current SEQ_CNT in the ACK_1 plus all unacknowl-

Copyright International Organization for Standardization
Provided by IHS under license with ISO
No reproduction or networking permitted without license from IHS Not for Resale

edged Data frames with lower SEQ_CNTs. If any of these ACKs with lower SEQ_CNT is received later, it is ignored and Credit_Count is not decremented.

h) For an ACK_0 (parameter field: History bit = 0, ACK_CNT = 0) received, the Sequence Initiator recognizes that the Sequence has been received successfully or unsuccessfully, or that the interlock is being completed (see 11.2.2), but does not perform any EE_Credit_CNT management.

i) For an ACK_1 with $EOF_t$ or $EOF_{dt}$ received, even if the History bit contains a value of 1, the Sequence Initiator shall recover the Credit for the Sequence by decrementing the EE_Credit_CNT by an additional value equal to all unacknowledged Data frames with lower SEQ_CNT of the Sequence. If any of these ACKs with lower SEQ_CNT is received later, it is ignored and Credit_Count is not decremented.

### 18.4.3 Sequence Recipient

#### 18.4.3.1 General

The Sequence Recipient is responsible for acknowledging valid Data frames received (see 11.2.2.3).

The Sequence Recipient may use ACK_0 and ACK_1 as determined during N_Port Login (see 15.6). The Sequence Recipient rules for using ACK_0 and ACK_1 are different and are listed for a non-streamed Sequence first, followed by additional rules for streamed Sequences.

#### 18.4.3.2 ACK_0

If ACK_0 is used (see 11.2.2), the following rules apply to the Sequence Recipient:

a) ACK_0 shall not participate in end-to-end flow control.
b) A single ACK_0 per Sequence shall be used to indicate successful or unsuccessful Sequence delivery at the end of the Sequence except under specified conditions.
c) Both the History bit and the ACK_CNT of the Parameter field shall be set to zero.
d) The ACK_0 used at the end of a Sequence shall have the End_Sequence bit set to 1. The ACK_0 used at the end of a Sequence shall be ended with $EOF_t$ or $EOF_{dt}$ in Classes 1 and 6 and with $EOF_t$ in Class 2.

#### 18.4.3.3 ACK_1

If ACK_1 is used, the following rules apply to the Sequence Recipient:

a) For each valid Data frame acknowledged an ACK_1 shall be sent with ACK_CNT set to 1.
b) The History bit of the Parameter field shall be set to 1 if at least one ACK is pending for a previous SEQ_CNT for the Sequence, or shall be set to zero if no ACK is pending for any previous SEQ_CNT for the Sequence (see 11.2.2.3).
c) In Classes 1 and 6, the Sequence Recipient shall withhold transmission of the last ACK_1 until all preceding ACK_1s corresponding to all Data frames with previous SEQ_CNTs have been transmitted. The last ACK_1 in Classes 1 and 6 shall have the End_Sequence bit set to 1, History bit set to zero and shall contain $EOF_t$ or $EOF_{dt}$.
d) In Class 2, the last ACK_1 shall be issued by the Sequence Recipient in one of the two ways specified.
   A) In Class 2 the Sequence Recipient shall withhold transmission of the last ACK_1 until all preceding Data frames with lower SEQ_CNTs have been received, processed, and corresponding ACK_1s transmitted (see 17.3.10). In this case, the last ACK_1 transmitted by the Sequence Recipient shall have the End_Sequence bit set to 1, History bit set to zero and shall contain $EOF_t$.
   B) In Class 2, in response to the last Data frame (End_Sequence bit = 1) transmitted by the Sequence Initiator, if any of the Data frame is pending for the Sequence, the Sequence Recipient may transmit ACK_1 (with End_Sequence bit set to zero) but with $EOF_n$ in lieu of $EOF_t$. In this case, the last ACK_1 transmitted by the Sequence Recipient shall have the End_Sequence bit set to 1, History bit set to 1 and shall contain $EOF_t$.

#### 18.4.3.4 Last ACK timeout

If a Sequence error is detected or the E_D_TOV expires when the Sequence Recipient is withholding the last ACK

Copyright International Organization for Standardization
Provided by IHS under license with ISO
No reproduction or networking permitted without license from IHS Not for Resale

for a Sequence and waiting to send other ACKs for that Sequence, the Sequence Recipient supporting discard policy shall set Abort Sequence bits and transmit the last ACK. The Sequence Recipient supporting the Process Policy shall transmit the last ACK without setting the Abort Sequence bits (see 17.3.10.4).

#### 18.4.3.5 Streamed Sequences

Each of the streamed Sequences shall follow all the rules for a non-streamed Sequence as defined in 18.4.3.1 and 18.4.3.3 above. In addition, in the case of multiple Sequence discard policy, the last ACK for the succeeding Sequence shall be withheld until all the previous Sequences are complete and deliverable. This additional withholding, for previous Sequences to complete and be deliverable, is not applicable to the case of Single Sequence discard policy.

### 18.4.4 EE_Credit

EE_Credit is the number of receive buffers in the Sequence Recipient that have been allocated to a given Sequence Initiator. EE_Credit represents the maximum number of unacknowledged or outstanding frames that may be transmitted without the possibility of overrunning the receiver at the Sequence Recipient. EE_Credit is defined per class per Sequence Recipient and managed by the Sequence Initiator. Class 1 or 6 EE_Credit represents the number of Class 1 or 6 receive buffers and Class 2 EE_Credit represents the number of Class 2 buffers allocated to the Sequence Initiator. EE_Credit is not applicable to Class 3. The value of EE_Credit allocated to the Sequence Initiator is conveyed to this Nx_Port through the EE_Credit field of the Service Parameters. The minimum or default value of EE_Credit is one.

EE_Credit is used as a controlling parameter in end-to-end flow control.

### 18.4.5 EE_Credit_CNT

EE_Credit_CNT is defined as the number of unacknowledged or outstanding frames awaiting a response and represents the number of receive buffers that are occupied at the Sequence Recipient. To track the number of frames transmitted and outstanding, the Sequence Initiator uses the above variable.

### 18.4.6 EE_Credit management

EE_Credit management involves an Nx_Port establishing and revising EE_Credit with the other Nx_Port it intends to communicate with, for Class 1, 2, 6 or all three.

N_Port Login is used to establish and optionally revise these EE_Credit values. The Estimate Credit procedure may be used to estimate and revise End-to-End Credit for streaming. The Advise Credit Sequence and associated LS_ACC Sequence may also be used as a stand-alone procedure to revise the EE_Credit. The Service Parameters interchanged during N_Port Login provide the Class 1 or Class 2 EE_Credit separately in their respective Credit fields.

A Sequence Initiator, during N_Port Login obtains EE_Credit from the Nx_Port to which it is logging in. EE_Credit allocated by the Sequence Recipient forms the maximum limit for the EE_Credit_CNT value. The EE_Credit_CNT value is set at zero, at the end of initialization, Login or Relogin. The EE_Credit_CNT is incremented, decremented or left unaltered as specified by the flow control management rules (see 18.4.1). The EE_Credit_CNT shall not exceed the EE_Credit value to avoid possible overflow at the receiver except that the EE_Credit_CNT may exceed the EE_Credit value as a result of transmitting an ABTS Basic Link Service.

The Sequence Initiator shall allocate the total Nx_Port Credit associated with a Sequence Recipient among all active Sequences associated with that Sequence Recipient. The Sequence Initiator function may dynamically alter the Credit associated with each active Sequence as long as the total Nx_Port Credit specified for the Sequence Recipient is not exceeded. In the event of an abnormal termination of a Sequence using the Abort Sequence Protocol, the Sequence Initiator may reclaim the Sequence Credit allocation when the LS_ACC response has been received to the Abort Sequence frame.

The Nx_Port is responsible for managing EE_Credit_CNT using EE_Credit as the upper bound on a per Nx_Port

Copyright International Organization for Standardization
Provided by IHS under license with ISO
No reproduction or networking permitted without license from IHS Not for Resale

basis except that the EE_Credit_CNT may exceed the EE_Credit value as a result of transmitting an ABTS Basic Link Service.

### 18.4.7 End-to-end flow control model

The end-to-end flow control model is illustrated in figure 24. The model includes flow control parameters, control variables and resources for a Data frame from a Sequence Initiator and ACK_1 or BSY/RJT in response from the Sequence Recipient.

a) The Sequence Recipient provides a number of Class 1, Class 2 and/or Class 6 receive buffers.
b) The Sequence Initiator obtains the allocation of Class 1, Class 2 and/or Class 6 receive buffers, as Class 1 Class 2 and Class 6 Accredits, respectively. That allocation is distributed among all the open Sequences for a specific Sequence Recipient.
c) The Sequence Initiator manages the end-to-end flow by managing Class 1, Class 2 and Class 6 end-to-end Credit-CNT(s). That management is distributed among all the active Sequences for a specific Sequence Recipient.

The model illustrates all possible replies to the Data frame. The EE_Credit_CNT is decremented by one when the ACK_1 frame is received. F_BSY(LC) is a valid response only to Class 2.

For more details on incrementing and decrement EE_Credit_CNT see table 250.

### 18.4.8 End-to-end class dependency

#### 18.4.8.1 End-to-end Credit allocation

Each Sequence Recipient may allocate the same Class 1 or Class 6 Nx_Port EE_Credit value to each Nx_Port it is logging into. This Class 1 or Class 6 Credit value may be the maximum supportable by the Sequence Recipient.

Each Sequence Recipient allocates some number of its receive buffers for Class 2 Service to Nx_Ports it is logging into. The sum of allocated Class 2 buffers may exceed the total number of Class 2 buffers supported at the Sequence Recipient. This excess buffer allocation shall not result in overrun. Class 2 EE_Credit allocation depends upon system requirements, which are outside the scope of this standard.

#### 18.4.8.2 EE_Credit_CNT management

Since Class 2 supports demultiplexing to multiple Sequence Recipient, the Sequence Initiator manages a Connectionless EE_Credit_CNT for each Sequence currently active, with that Sequence Recipient's EE_Credit as the upper bound.

A Class 3 Nx_Port does not perform EE_Credit_CNT management.

Copyright International Organization for Standardization
Provided by IHS under license with ISO
No reproduction or networking permitted without license from IHS Not for Resale

.

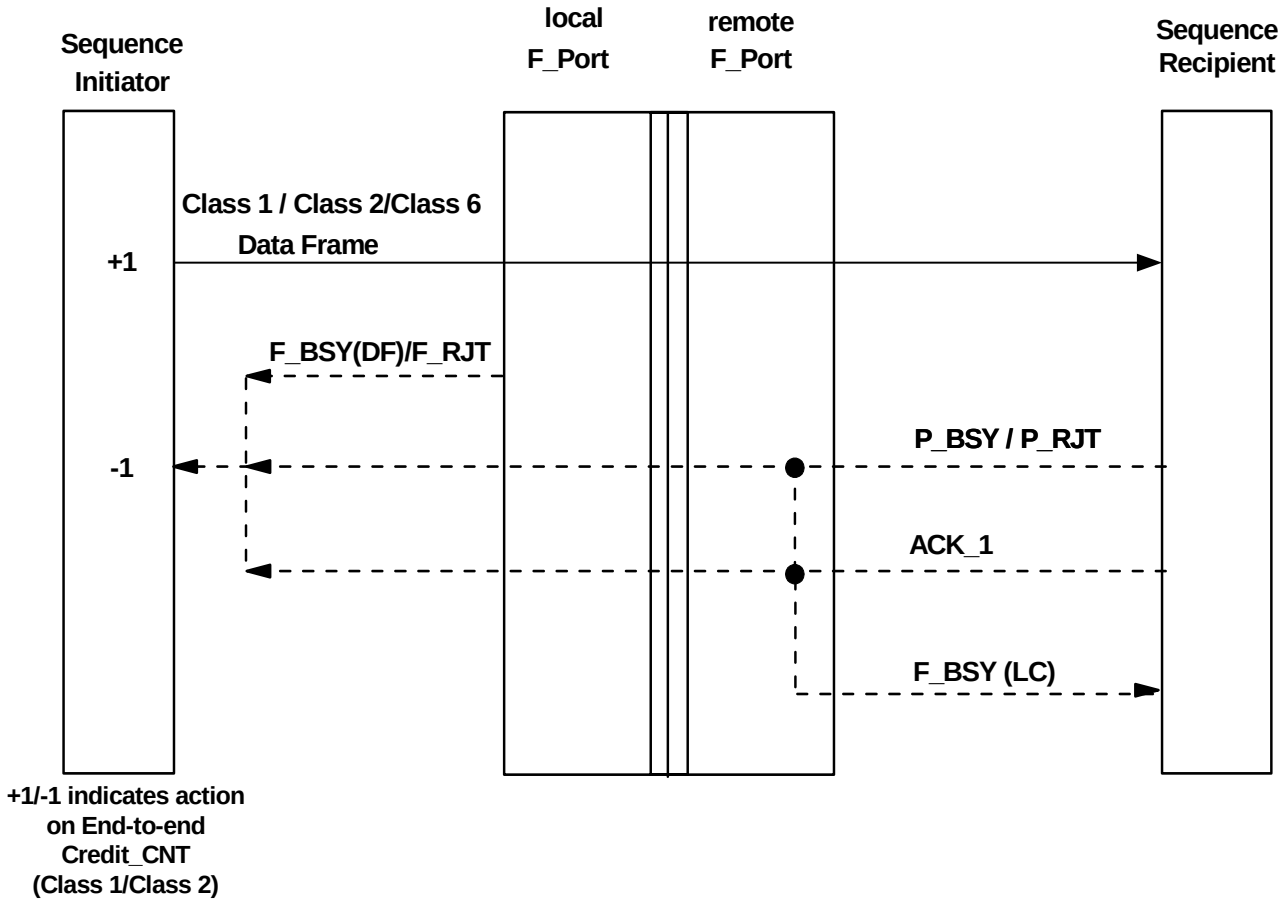


**Figure 24 - End-to-end flow control model**

### 18.4.9 EE_Credit recovery

In Class 1, Class 2 and Class 6, the Sequence Initiator may recover EE_Credit when a Sequence is terminated, by any unacknowledged Data frames associated with the Sequence being terminated. Termination may be normal or abnormal.

In Class 1, Class 2 and Class 6, EE_Credit may be recovered by the Sequence Initiator within the Sequence by detection of SEQ_CNT discontinuity in ACK, if the ACK received contains zero in the History bit of the Parameter field. Otherwise, the Sequence Initiator at the termination of the Sequence should recover EE_Credit.

If an ACK is received that contains a zero in the History bit of the parameter field, then EE_Credit for any outstanding ACK with lower SEQ_CNT shall be reclaimed. If any of these outstanding ACKs arrive later due to misordering, they shall not affect the EE_Credit_CNT.

Class 1 and Class 6 EE_Credit is also recovered when a dedicated connection is removed by either $EOF_{dt}$ or by the Link Reset Protocol.

In Class 1, Class 2 and Class 6, EE_Credit may also be recovered by an Nx_Port through Relogin.

Class 2 EE_Credit may also be reinitialized to N_Port Login value using Link Credit Reset (see 11.2.4.2).

### 18.4.10 Class 4

Class 4 shall use either ACK_1 or ACK_0 frames for frame acknowledgment.

Copyright International Organization for Standardization
Provided by IHS under license with ISO
No reproduction or networking permitted without license from IHS Not for Resale

The frame's VC_ID field shall contain the appropriate CIVC_ID or CRVC_ID value. This value may be different from the value in the VC_ID field in the Data frame being acknowledged.

The ACK frame used to terminate a Sequence shall have an EOFt delimiter. The ACK frame used to deactivate a Class 4 circuit and terminate a Sequence shall use the EOFdt delimiter. The ACK frame used to remove a Class 4 circuit and terminate a Sequence shall use the EOFrt delimiter. All other ACK frames that do not terminate a Sequence shall use an EOFn delimiter.

### 18.4.11 Procedure to estimate end-to-end Credit

#### 18.4.11.1 Introduction

An estimate of the minimum end-to-end Credit between an Nx_Port pair for a given distance helps achieve the maximum bandwidth utilization of the channel, by continuously streaming data. The procedure to estimate end-to-end Credit is defined to accomplish this purpose.

Link Service Sequences that support this procedure are optional. This procedure shall be performed after Login between this Nx_Port pair. Login determines a number of Service Parameters (e.g., the maximum frame size that each Nx_Port is capable of receiving).

The procedure is applicable to both Class 1 and Class 2. In Class 2, the procedure and the continuous streaming function may also be limited by the buffer-to-buffer Credit.

The procedure shall be invoked by the Link Service support of the source Nx_Port and responded to by the Link Service support of the destination Nx_Port. Since the ELS requests used to perform this procedure are optional, LS_RJT may be received to any request (except ESTC which has no reply) with a reason code of "Command not supported".

To perform this procedure for Class 1, a Class 1 Connection shall have been established before the procedure is performed.

#### 18.4.11.2 Procedure steps

##### 18.4.11.2.1 General

This procedure is optional and consists of following three request Sequences.

a) Establish Streaming Sequence
b) Estimate Credit Sequence
c) Advise Credit Sequence

The procedure is illustrated with these request Sequences and their respective reply Sequences in figure 25.

The procedure shall be performed for Class 1 or Class 2 with respective delimiters, as clause 13.

Copyright International Organization for Standardization
Provided by IHS under license with ISO
No reproduction or networking permitted without license from IHS Not for Resale

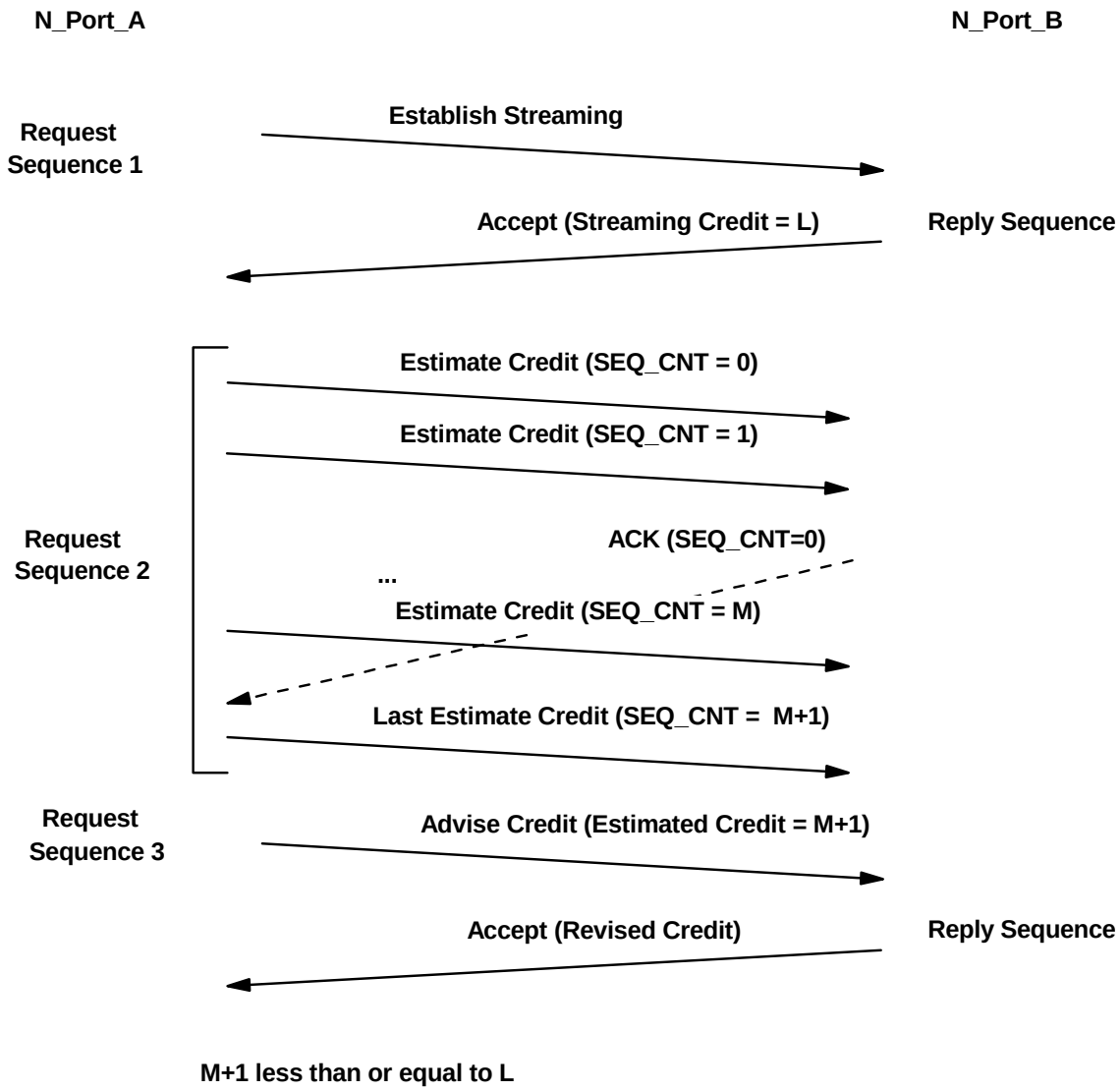


**Figure 25 - Procedure to estimate end-to-end Credit**

#### 18.4.11.2.2 Establish Streaming Sequence

The ESTS ELS (see 12.3.2.6) shall be used to obtain an end-to-end Credit large enough to perform continuous streaming from a source Nx_Port to a destination Nx_Port. This Sequence provides an opportunity for the destination Nx_Port to communicate the maximum end-to-end Credit it shall provide for the purposes of streaming. This temporary allocation is termed Streaming Credit (L).

This Sequence shall be used between an Nx_Port pair after the Nx_Port pair have logged in with each other. This Sequence shall be initiated as a new Exchange. The Originator of the Exchange shall initiate the Sequence.

1) The source shall transmit the ESTS ELS.
2) The destination shall reply with a LS_ACC frame.
3) The Class Validity bit set to one (see 15.6.5.3) shall identify the Class that is requesting streaming Credit.
4) The Payload of LS_ACC shall have the same format as the Service Parameters for N_Port Login. The Payload shall contain Streaming Credit (L) allocated in the end-to-end Credit field of the appropriate Class of the Service Parameters for which the Estimate Credit procedure is being performed (word 2, bits 14 to 0 of each class group). The receiver shall ignore the other fields.

Copyright International Organization for Standardization
Provided by IHS under license with ISO
No reproduction or networking permitted without license from IHS Not for Resale

#### 18.4.11.2.3 Estimate Credit Sequence

The Estimate Credit (see 12.3.2.5) ELS shall be performed immediately following the completion of the Establish Streaming Sequence. This Sequence requires the use of ACK_1 and may not be executed by all Nx_Ports.

a) The source Nx_Port shall stream ESTC (see 12.3.2.5) frames consecutively until it receives the first ACK (ACK_1) from the destination Nx_Port that set the Abort Sequence bits (F_CTL bits 5 to 4) to '10' b. The source shall not exceed the Streaming Credit obtained during the Establish Streaming Sequence.
b) If the source does not receive ACK_1 after it has reached the limit imposed by the Streaming Credit value, it shall stop streaming and wait for the first ACK to be received with the Abort Sequence bits (F_CTL bits 5 to 4) set to '10' b.
c) The size of the Data Field of the ESTC frame shall be the normal size frames transmitted by a FC-4 based on the Service Parameters from N_Port Login.
d) The Payload shall contain valid data bytes.
e) The SEQ_CNT shall follow the normal rules for Sequence transmission.
f) The destination Nx_Port shall respond with ACK for Data frames received.
g) If the highest SEQ_CNT transmitted by the source Nx_Port at the time it receives the first ACK is M, the number of outstanding frames (i.e., Credit estimated for continuous streaming) shall equal M+1. If ACK is received within the Streaming Credit limit (L > M), this value of M+1 represents the minimum Credit required to utilize the maximum bandwidth of the Fibre. If the ACK is received after reaching the Streaming Credit limit, this value is less than the optimal Credit required to utilize the maximum bandwidth of the fibre.
h) The source Nx_Port shall follow all the rules in closing the Sequence, by sending the last Data frame of the Sequence and waiting for corresponding ACK to be received.

#### 18.4.11.2.4 Advise Credit Sequence

The Advise Credit (see 12.3.2.3) shall be performed immediately following completion of the Estimate Credit Sequence. The source Nx_Port that performed the Estimate Credit Sequence shall advise the destination Nx_Port of the Estimated Credit in ADVC Data Field. The destination Nx_Port shall reply using a LS_ACC frame, with a revised end-to-end Credit value in its Payload. This value is determined by the destination Nx_Port based on its buffering scheme, buffer management, buffer availability and Nx_Port processing time. This is the final value to be used by the source Nx_Port for revised end-to-end Credit.

This Sequence provides a complementary function to Login. In contrast to the Login frame, the ADVC frame contains the end-to-end Credit it would like to be allocated for continuous streaming.

If the Estimated Credit (M+1) is less than or equal to the Streaming Credit, the destination may choose to reallocate the estimated end-to-end Credit. If the Streaming Credit is smaller than needed for continuous streaming, the source Nx_Port is bound to run short of end-to-end Credit and the source Nx_Port may advise that value as the Estimated Credit.

a) The source Nx_Port shall transmit Advise Credit frame with the Estimated Credit (M+1).
b) The Payload of the ADVC shall have the same format as the Service Parameters for Login. The Payload shall contain the Estimated Credit (M+1) in end-to-end Credit field of the appropriate Class of the Service Parameters. The appropriate Class is identified by the Class Validity bit set to one. The receiver shall ignore the other fields.
c) The destination Nx_Port shall determine the revised end-to-end Credit value. The destination shall determine the value based on its buffer management, buffer availability and port processing time and may add a factor to the Estimated Credit value. This is the final value to be used by the source Nx_Port for end-to-end Credit.
d) The destination Nx_Port replies with a LS_ACC frame that successfully completes the Protocol. The LS_ACC Sequence shall contain the end-to-end Credit allocated to the source Nx_Port. The Payload of LS_ACC shall have the same format as the Service Parameters for Login. The Payload shall contain the final end-to-end Credit in end-to-end Credit field of the appropriate Class of the Service Parameters. The appropriate Class is identified by the Class Validity bit set to one. The receiver shall ignore the other fields.

Since the maximum frame size is permitted to be unequal in forward and reverse directions, the Estimate Credit

Copyright International Organization for Standardization
Provided by IHS under license with ISO
No reproduction or networking permitted without license from IHS Not for Resale

procedure may be performed separately for each direction of transfer. Credit modification applies only to the direction of the transfer of Estimate Credit frames.

The Estimate Credit procedure provides an approximation of the distance involved on a single path. If there are concerns that in a Fabric in which the length (and time) of the paths assigned may vary, the procedure may be repeated several times to improve the likelihood that the Estimated end-to-end Credit value is valid.

Alternatively, a source may accept the Estimated end-to-end Credit value. If, at a later time, data transfers are unable to stream continuously, the source may re-initiate the Estimate Credit Procedure, or arbitrarily request an increase in Estimated end-to-end Credit by using an ADVC Link request Sequence.

## 18.5 Buffer-to-buffer flow control

### 18.5.1 Introduction

Buffer-to-buffer flow control is an FC-2 staged control process to pace the flow of frames. The buffer-to-buffer control occurs in both directions between

a) Sequence Initiator and local Fx_Port
b) remote Fx_Port and Sequence Recipient Nx_Port
c) E_Ports within the Fabric
d) Sequence Initiator and Sequence Recipient Nx_Ports in point to-point topology

### 18.5.2 Buffer-to-buffer management rules

Buffer-to-buffer flow control rules are as follows:

a) Each FC_Port is responsible for managing its own BB_Credit_CNT.
b) The sending FC_Port shall not transmit a Class 2, Class 3, or Class 1 and 6/SOF$_{c1}$ frame unless the allocated BB_Credit is greater than zero and the BB_Credit_CNT is less than this BB_Credit. To avoid possible overrun at the receiver, each FC_Port is responsible for maintaining BB_Credit_CNT less than BB_Credit.
c) Each Nx_Port and Fx_Port sets BB_Credit_CNT value to zero at the end of Fabric Login, or Fabric Relogin.
d) Each FC_Port increments BB_Credit_CNT by one for each Class 2, Class 3, or Class 1and 6/SOF$_{c1}$ frame transmitted and decrements by one for each R_RDY received.
e) Recognition of SOF$_{c1}$, SOF$_{x2}$, or SOF$_{x3}$ shall be responded to by a transmission of an R_RDY when the buffer becomes available, regardless of weather the frame is valid, invalid, or discarded.

Managing BB_Credit_CNT is given in table 251. BB_Credit_CNT for E_Ports and B_Ports is specified in [7], FC-SW-3.

**Table 251 - Buffer-to-buffer flow control management**

| Activity | BB_Credit_CNT |
|---|---|
| FC_Port transmits any Class 2, Class 3, Class 1 or 6 frame with SOF$_{c1}$ (including F_BSY(DF), F_BSY(LC), F_RJT, P_BSY, P_RJT or LCR | Increment BB_Credit_CNT by one |
| FC_Port receives R_RDY | Decrement BB_Credit_CNT by one |
| FC_Port receives any Class 2, Class 3, or Class 1 or 6 frame with SOF$_{c1}$ (including F_BSY(DF), F_BSY(LC), F_RJT, P_BSY, P_RJT or LCR) | N/A |
| FC_Port transmits R_RDY | N/A |

Copyright International Organization for Standardization
Provided by IHS under license with ISO
No reproduction or networking permitted without license from IHS Not for Resale

### 18.5.3 BB_Credit

BB_Credit represents the number of receive buffers supported by an FC_Port for receiving Class 1 and 6/SOFc1, Class 2, or Class 3 frames. BB_Credit values of the attached FC_Ports are mutually conveyed to each other during the Fabric Login through the Credit field of common Service Parameters (see 15.6.2.3). The minimum or default value of BB_Credit is one.

BB_Credit is used as the controlling parameter in buffer-to-buffer flow control.

### 18.5.4 BB_Credit_Count

BB_Credit_CNT is defined as the number of unacknowledged or outstanding frames awaiting R_RDY responses from the directly attached FC_Port. It represents the number of receive buffers that are occupied at the attached FC_Port. To track the number of frames transmitted for which R_RDY responses are outstanding, the transmitting FC_Port uses the BB_Credit_CNT.

### 18.5.5 BB_Credit management

BB_Credit management involves an FC_Port receiving the BB_Credit value from the FC_Port to which it is directly attached. Fabric Login is used to accomplish this. The common Service Parameters interchanged during Fabric Login provide these values (see 15.6.2).

The transmitting FC_Port is responsible to manage BB_Credit_CNT with BB_Credit as its upper bound.

### 18.5.6 Buffer-to-buffer flow control model

The buffer-to-buffer flow control model is illustrated in figure 26. The model includes flow control parameters, control variables for a Class 2, Class 3, or Class 1 and 6/SOFc1 frame and R_RDY as its response, and the resources for Connectionless service. All possible responses to a Class 2 or Class 3 Data frame are illustrated.

Each FC_Port provides a number of receive buffers for Connectionless service. Each Nx_Port obtains the allocation of receive buffers from the Fx_Port (or Nx_Port in case of point-to-point topology) to which it is attached, as BB_Credit. Each Fx_Port obtains the allocation of receive buffers from the Nx_Port to which it is attached, as total BB_Credit for Connectionless service.

### 18.5.7 Class dependent frame flow

The class dependent flow of frames accomplishing buffer-to-buffer flow control for the following cases are illustrated in the figures referenced:

a) Class 1 and 6/SOFc1 frame with delivery or non-delivery to the Fabric (see figure 27). Possible responses from the Fx_Port or an Nx_Port to a Class 1 and 6/SOFc1 frame are illustrated.
b) Class 1 and 6/SOFc1 frame with delivery or non-delivery to an Nx_Port (see figure 28). Possible responses from the Fx_Port and the destination Nx_Port to a Class 1 and 6/SOFc1 frame are illustrated.
c) Class 2 with delivery or non-delivery to the Fabric (see figure 29). Possible responses from the Fx_Port or an Nx_Port within the Fabric to a Class 2 are illustrated.
d) Class 2 with delivery or non-delivery to an Nx_Port (see figure 30). Possible responses from the Fx_Port and the destination Nx_Port to a Class 2 Data frame are illustrated.
e) Class 3 (see figure 31). Possible responses from the Fx_Port and the destination Nx_Port to a Class 3 Data frame are illustrated.

### 18.5.8 R_RDY

For any Class 2, Class 3 Class 1/SOFc1 or Class 6/SOFc1 frames received at an FC_Port, an R_RDY is issued when a receive buffer is available.

--`,,```,,,,````-`-`,,`,,`,`,,`---

Copyright International Organization for Standardization
Provided by IHS under license with ISO
No reproduction or networking permitted without license from IHS Not for Resale

### 18.5.9 BB_Credit_Count reset

BB_Credit_Count is reinitialized to the login value for both Nx_Port and Fx_Port on Fabric Relogin or after the Link Reset Protocol has been performed.

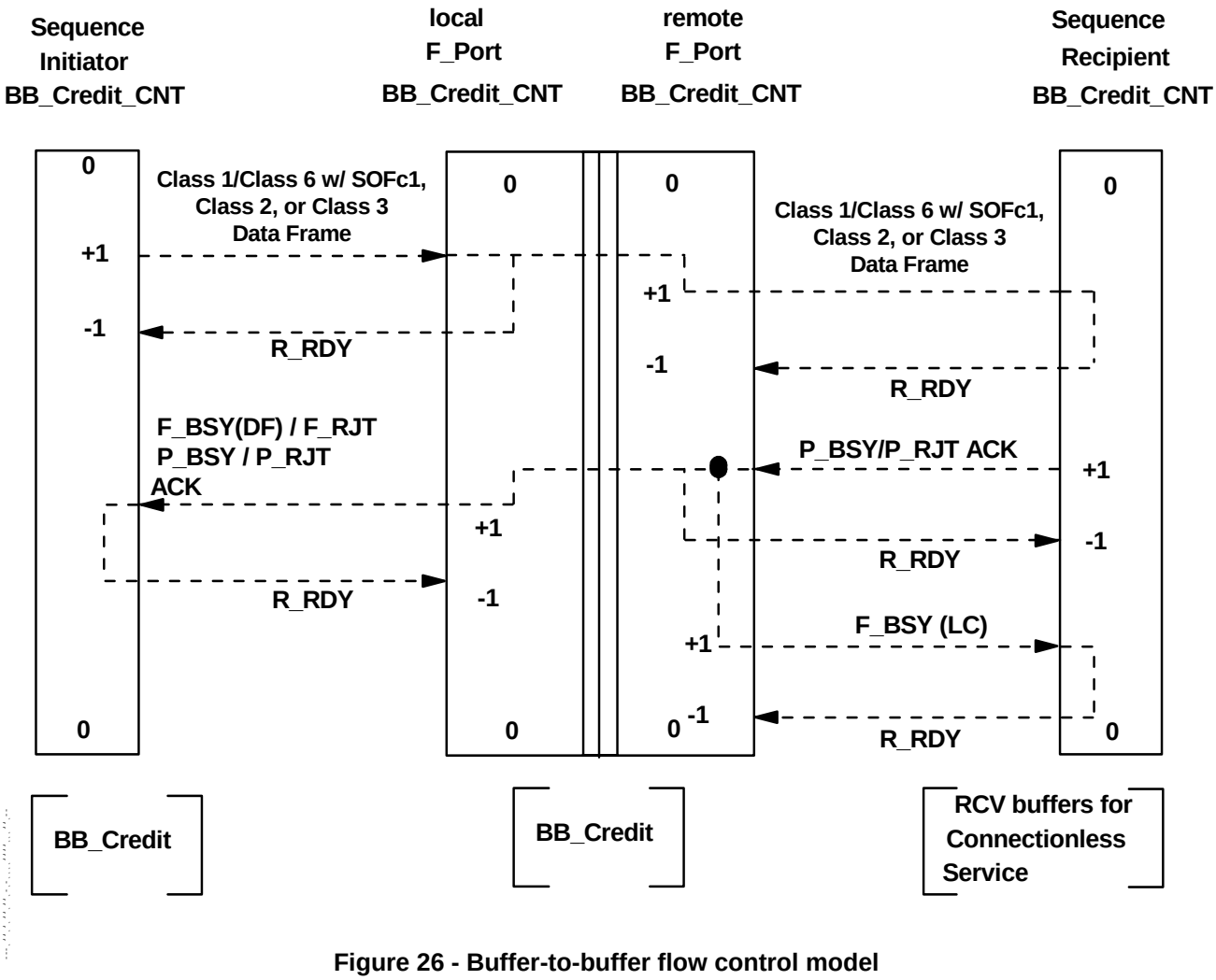


**Figure 26 - Buffer-to-buffer flow control model**

Copyright International Organization for Standardization
Provided by IHS under license with ISO
No reproduction or networking permitted without license from IHS
Not for Resale

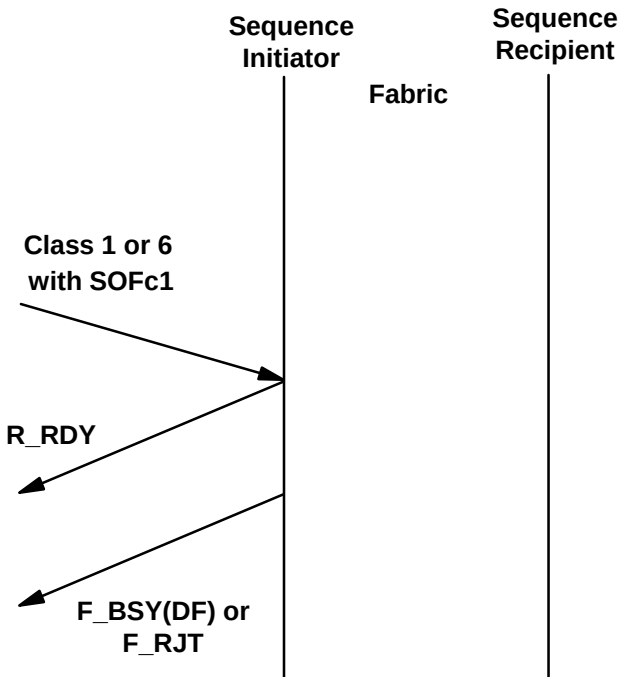


**Figure 27 - Class 1 or 6/SOF$_{c1}$ frame flow with delivery or non-delivery to the fabric**

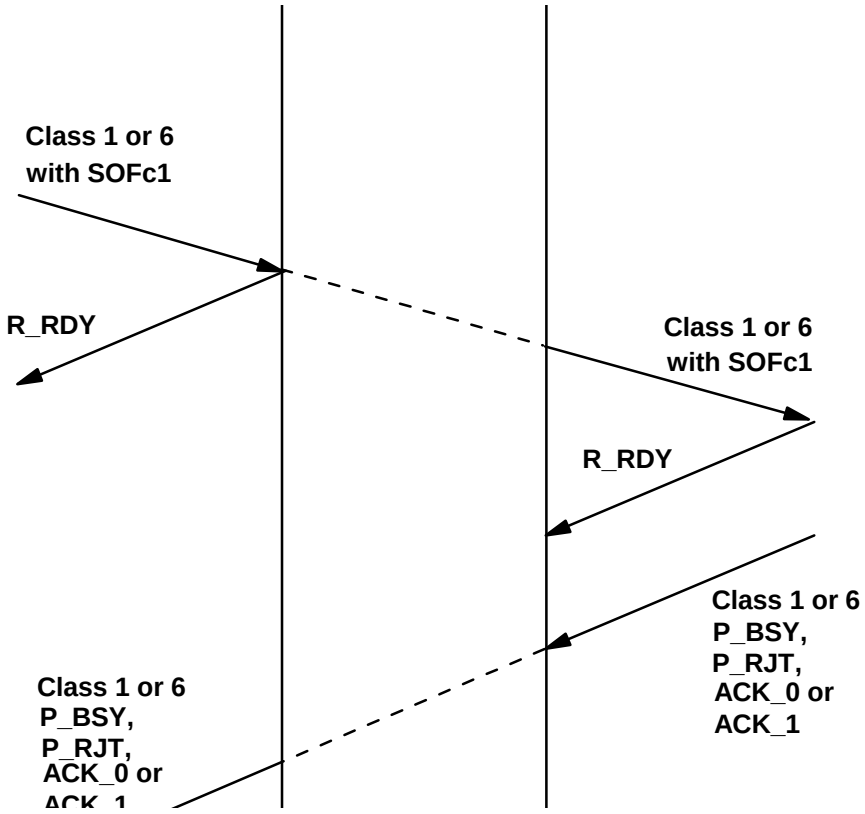


**Figure 28 - Class 1 or 6/SOF$_{c1}$ frame flow with delivery or non-delivery to an Nx_Port**

--`,,```,,,,````-`-`,,`,,`,`,,`---
Copyright International Organization for Standardization
Provided by IHS under license with ISO
No reproduction or networking permitted without license from IHS
Not for Resale

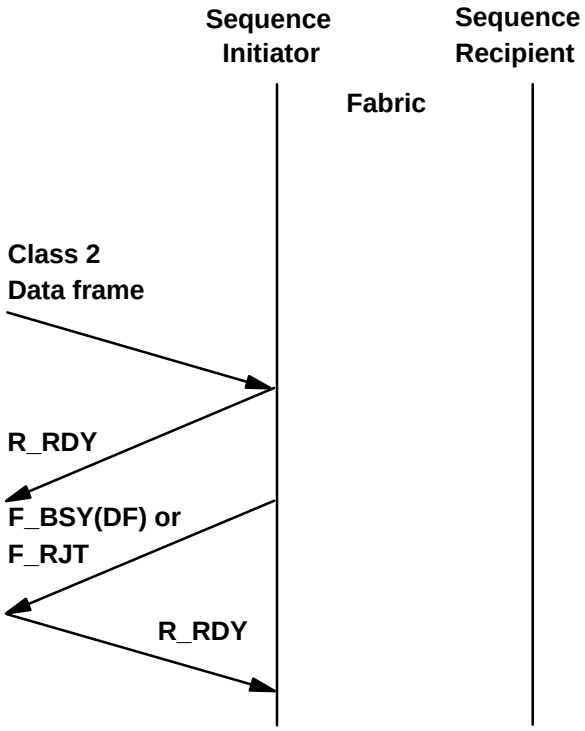


**Figure 29 - Buffer-to-buffer - Class 2 frame flow with delivery or non-delivery to a Fabric**

--`,,```,,,,````-`-`,,`,,`,`,,`---

Copyright International Organization for Standardization
Provided by IHS under license with ISO
No reproduction or networking permitted without license from IHS Not for Resale

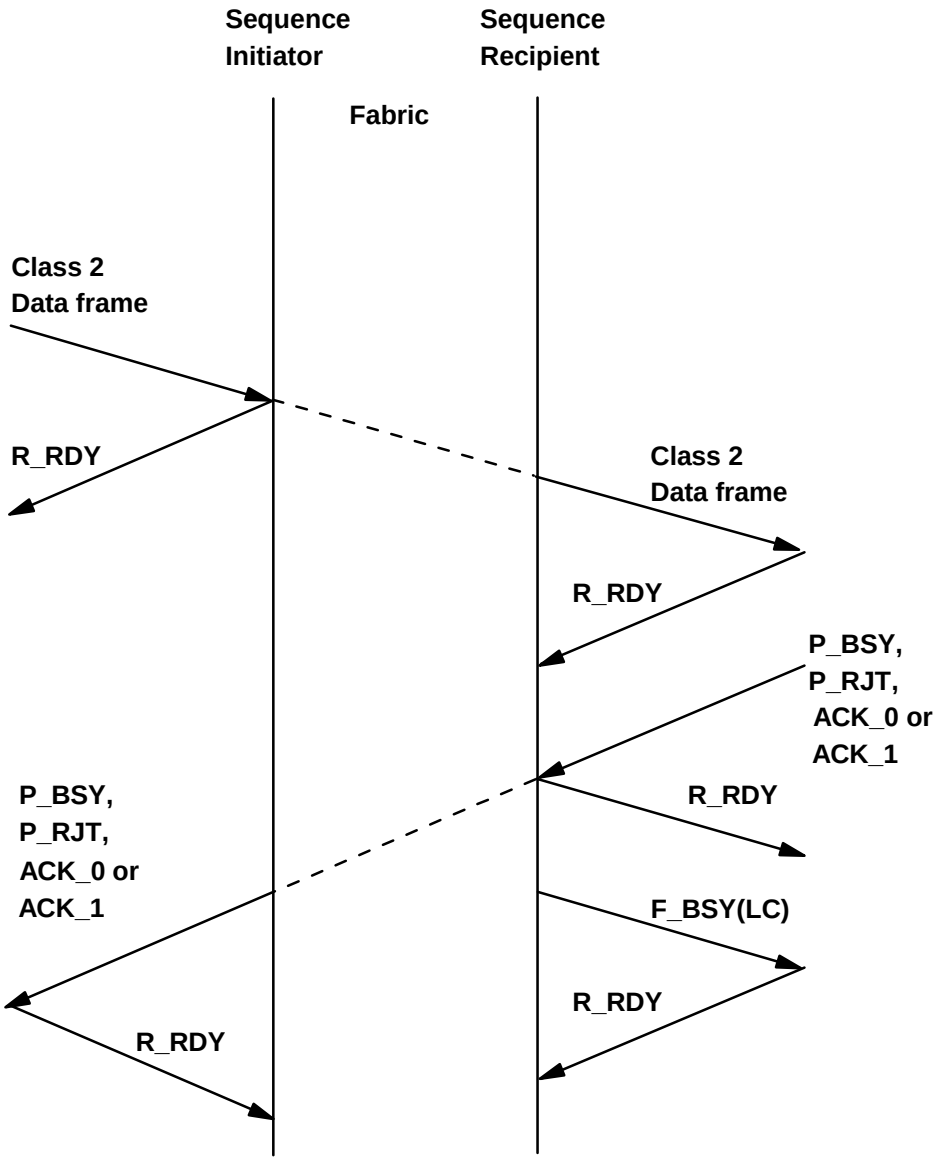


**Figure 30 - Buffer-to-buffer - Class 2 frame flow with delivery or non-delivery to an Nx_Port**

Copyright International Organization for Standardization
Provided by IHS under license with ISO
No reproduction or networking permitted without license from IHS
Not for Resale

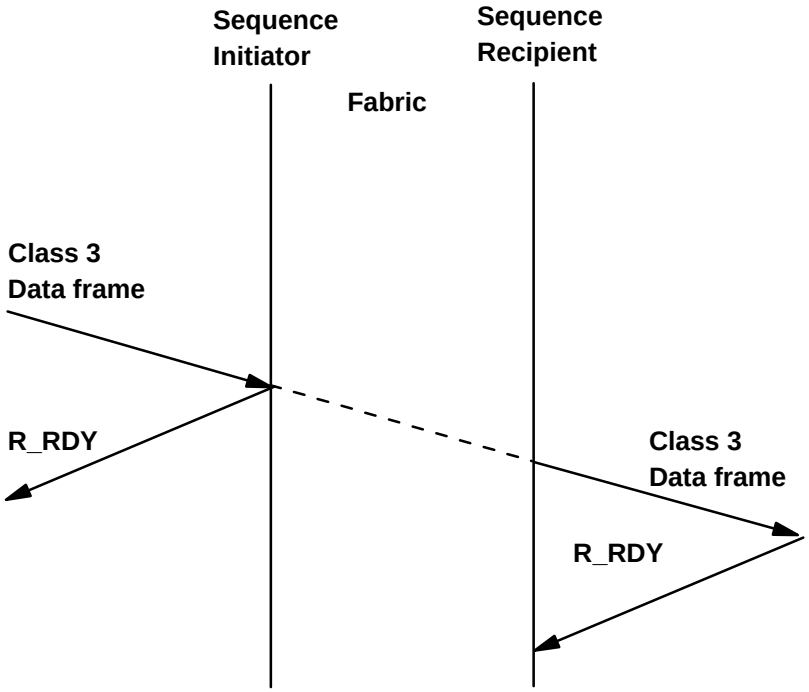


**Figure 31 - Buffer-to-buffer - Class 3 frame flow**

### 18.5.10 Alternate buffer-to-buffer Credit management

An alternate buffer-to-buffer credit management may be used instead of the one described in 18.5.

The use of alternate buffer-to-buffer Credit management shall be indicated by the Nx_Port through an N_Port Login Service Parameter during Fabric Login and N_Port Login (see 15.6.2.4.6).

Alternate BB_Credit management rules are summarized (See [2], FC-AL-2 for additional details):

a) Each Port is responsible for managing the Alternate BB_Credit.
b) During Login, BB_Credit shall be set to a value that represents the number of receive buffers that a FC_Port shall guarantee to have available as soon as a circuit is established. If this value is greater than zero, the FC_Port may start transmitting a frame without waiting for R_RDYs. If this value is equal to zero, the sending FC_Port shall wait to receive at least one R_RDY, before transmitting a frame.
c) The receiving FC_Port shall transmit at least one R_RDY, representing the number of additional receive buffers available, before, during, or after the reception of frames.
d) The transmitting FC_Port shall decrement BB_Credit by one for each frame transmitted and increment by one for each R_RDY received.
e) For transmitting frames, the Available Credit shall be greater than zero. The Available Credit at any given time is expressed by the following equation:

   Available Credit = Login_BB_Credit + (Number of R_RDYs received - Login_BB_Credit)
   - Number of frames transmitted

   where

   A) Number of R_RDYs received ≥ Login_BB_Credit.
   B) The parenthetical expression is applicable only if it is positive, otherwise it is zero.

### 18.5.11 BB_Credit Recovery

BB_Credit recovery as described in this clause shall only be performed when two FC_Ports, not operating in arbitrated loop mode, have logged in with each other and have agreed to a non-zero BB_SC_N value.

--`,,```,,,,````-`-`,,`,,`,`,,`---

Copyright International Organization for Standardization
Provided by IHS under license with ISO
No reproduction or networking permitted without license from IHS Not for Resale

An FC_Port that supports BB_Credit Recovery, shall maintain the following BB_Credit Recovery counters:

a) BB_SC_N is the log2 of BB_Credit Recovery modulus.
b) BB_RDY_N counts the number of R_RDY primitives received modulo $2^{BB_SC_N}$.
c) BB_FRM_N counts the number of frames received modulo $2^{BB_SC_N}$;

To initialize the counters, each FC_Port capable of supporting BB_Credit Recovery shall perform the following steps:

a) Set the above counters (a, b and c) to zero before fabric login.
b) After having transmitted or received the appropriate login (whether the first login after reset or a Relogin), if the BB_SC_N value communicated by the other FC_Port in the login is zero, the FC_Port shall discard or set to zero the above counters (a, b and c). If the BB_SC_N value is not zero, the FC_Port shall set BB_SC_N (a above) to the greater of BB_SC_N from the other FC_Port's login parameters or its own BB_SC_N value, and set to zero all other BB_Credit Recovery counters (b and c above).
c) After explicit or implicit logout, discard or set to zero all counters (a, b and c above).

To recover any lost BB_Credit, each FC_Port shall perform the following steps. Each step of initialization and operation shall be processed atomically, (i.e., each step shall be completed before any other BB_Credit recovery operation):

a) Transmit a BB_SCs primitive if $2^{BB_SC_N}$ number of frames that require BB_Credit have been sent since the start of communication, or since the last time a BB_SCs primitive was sent.
b) Transmit a BB_SCr primitive if $2^{BB_SC_N}$ number of R_RDY primitives have been sent since the start of communication, or since the last time a BB_SCr primitive was sent.
c) After receiving each R_RDY, increment BB_RDY_N by one. If BB_RDY_N equals $2^{BB_SC_N}$, set BB_RDY_N to zero.
d) After receiving each frame, increment BB_FRM_N by one. If BB_FRM_N equals $2^{BB_SC_N}$, set BB_FRM_N to zero.
e) When a BB_SCr primitive is received, the number of BB_Credits lost may be calculated using the following equation:

   BB_Credits lost = $(2^{BB_SC_N}$ - BB_RDY_N) modulo $2^{BB_SC_N}$.

   The BB_Credit_CNT shall then be decremented by the number of BB_Credits lost. BB_RDY_N is then set to zero, before the next R_RDY is received.
f) When a BB_SCs primitive is received, the number of BB_Credits the other FC_Port has lost may be calculated using the following equation:

   BB_Credits lost by other FC_Port = $(2^{BB_SC_N}$ - BB_FRM_N) modulo $2^{BB_SC_N}$.

   One R_RDY shall be resent for each BB_Credit that is lost. BB_FRM_N is then set to zero, before the next frame is received.

When the two FC_Ports performing the login specifies different non-zero values of BB_SC_N, the larger value shall be used. If either FC_Port specifies a BB_SC_N value of zero, the BB_Credit recovery process shall not be performed, and no BB_SCx primitive shall be sent.

NOTE If all frames or R_RDY primitives sent between two BB_SCx primitives are lost, 2BB_SC_N number of BB_Credits are lost, and are not recovered by the scheme outlined in 18.5.11. Therefore BB_SC_N should be chosen so that the probability of loosing 2BB_SC_N number of consecutive frames or R_RDY primitives is deemed negligible. The recommended value of BB_SC_N is 8.

## 18.6 VC_RDY

In Class 4, once a Class 4 circuit is activated to provide fractional bandwidth service between communicating Nx_Ports, the Fabric shall transmit the VC_RDY Primitive Signal to indicate that the receiving N_Port may send a frame for the VC_ID identified in the VC_RDY Primitive Signal.

--`,,```,,,,````-`-`,,`,,`,`,,`---
Copyright International Organization for Standardization
Provided by IHS under license with ISO
No reproduction or networking permitted without license from IHS Not for Resale

The VC_RDY Primitive Signal shall only be used for flow control and shall indicate that the VC identified in the VC_RDY still exists in the Fabric. The VC_RDY from an F_Port also indicates that a frame buffer is free for the identified VC only.

The VC_RDY Primitive Signal is used for F_Port-to-N_Port buffer-to-buffer flow control for an individual VC. The VC_RDY Primitive Signal shall be transmitted when the Fabric determines that the N_Port may send a single frame to maintain its QoS parameters for the associated VC. This Primitive Signal shall only be transmitted when a Dormant or Live Class 4 circuit exists with an N_Port.

The VC_RDY Primitive Signal shall indicate that the source N_Port needs to transmit a single frame, but not to exceed its available EE_C4_Credit or the VC_Credit, for the indicated VC Identifier (VC_ID).

The event associated with the receipt of a VC_RDY may be indicated to level above FC-2 within an N_Port to cause a frame for the indicated VC to be transmitted.

## 18.7 BSY / RJT in flow control

In Class 1 and Class 6 end-to-end flow control, neither F_BSY, F_RJT, nor P_BSY occurs, except for a Class 1 or 6/SOFc1. In Class 2 end-to-end flow control, F_BSY, F_RJT, P_BSY or P_RJT may occur for any Data frame. Each of these responses contributes to end-to-end and buffer-to-buffer flow controls.

End-to-end Class 2 buffers at the Sequence Recipient Nx_Port are shared by multiple source Nx_Ports that may be multiplexing Data frames. This Class 2 multiplexing requires the distribution of Class 2 Credit to each source Nx_Port to be honored to prevent BSY or RJT. Unless an adequate number of end-to-end Class 2 buffers are available and Credit distribution is honored, a BSY or RJT may occur in Class 2. If buffer-to-buffer flow control rules are not obeyed by the transmitter, the results are unpredictable (e.g., if a Class 2 frame is received without Credit and the receiver does not have a buffer to receive it, the receiver may discard the frame without issuing a P_BSY or P_RJT).

## 18.8 LCR in flow control

LCR does not need EE_Credit and does not participate in end-to-end flow control. LCR participates only in buffer-to-buffer flow control as Class 2. (see figure 32). In response to an LCR, the Fabric shall issue an R_RDY and may issue a F_BSY or F_RJT. The destination Nx_Port shall issue an R_RDY and may issue a P_RJT (see 11.2.3.4). The destination Nx_Port shall not issue a P_BSY to an LCR.

Flow control model for an LCR frame is illustrated in figure 33 that covers the buffer-to-buffer flow control for all possible responses to an LCR.

After issuing the LCR, the Sequence Initiator shall re initializes its EE_Credit to the N_Port Login value for the destination Nx_Port. The Sequence Initiator shall not wait for any response before reinitialized this Credit (see 18.3.5).

## 18.9 Integrated Class 2 flow control

Integrated buffer-to-buffer and end-to-end flow controls applicable to Class 2 is illustrated in figure 34 for a Data frame from the Sequence Initiator and its response from the Sequence Recipient.

Integrated Class 2 flow control management is summarized in table 252.

## 18.10 Intermix

The flow control model for Intermix is represented by the superposition of end-to-end and buffer-to-buffer flow controls (See figures 24 and 26).

--`,,```,,,,````-`-`,,`,,`,`,,`---

Copyright International Organization for Standardization
Provided by IHS under license with ISO
No reproduction or networking permitted without license from IHS Not for Resale

## 18.11 Point-to-point topology

All the flow control models specified in this clause apply to Fabric topology. The flow control model for Point-to-point topology is represented by the corresponding model for the Fabric topology, without the flow of F_BSY(DF), F_BSY(LC), and F_RJT.

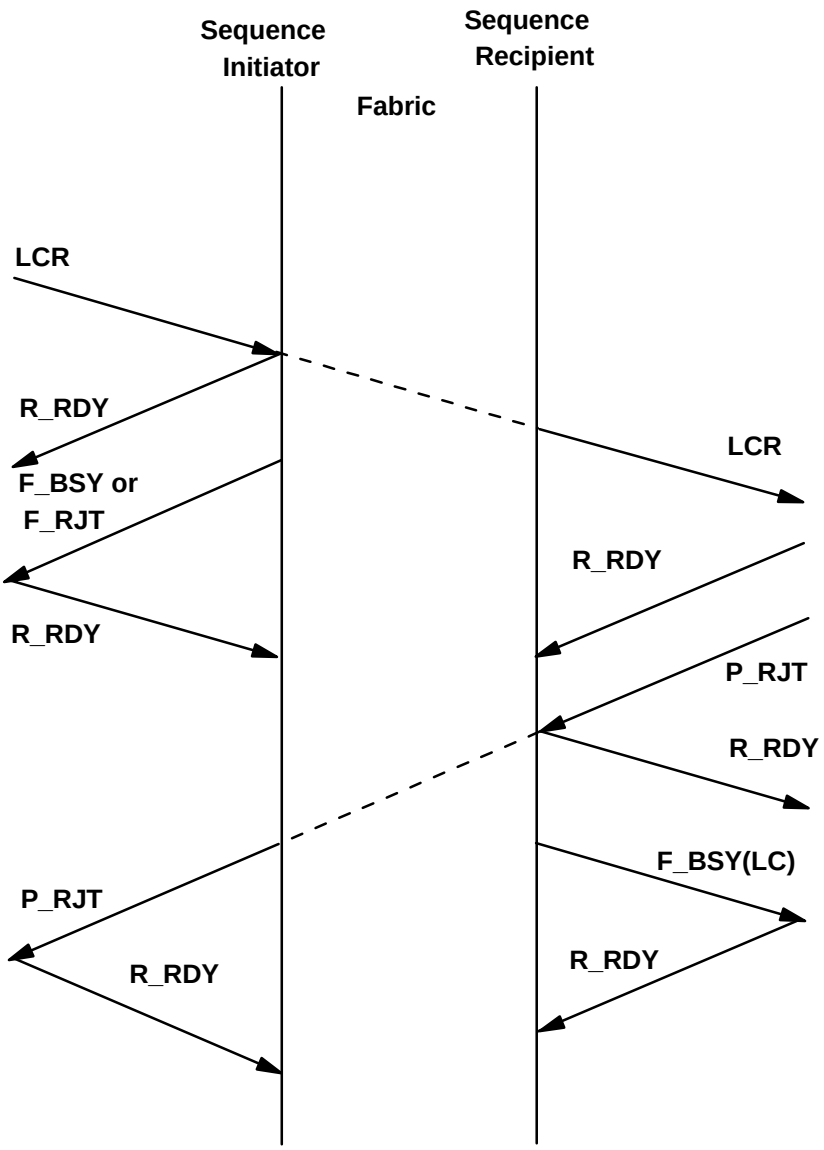


**Figure 32 - LCR frame flow and possible responses**

--`,,```,,,,````-`-`,,`,,`,`,,`---

Copyright International Organization for Standardization
Provided by IHS under license with ISO
No reproduction or networking permitted without license from IHS Not for Resale

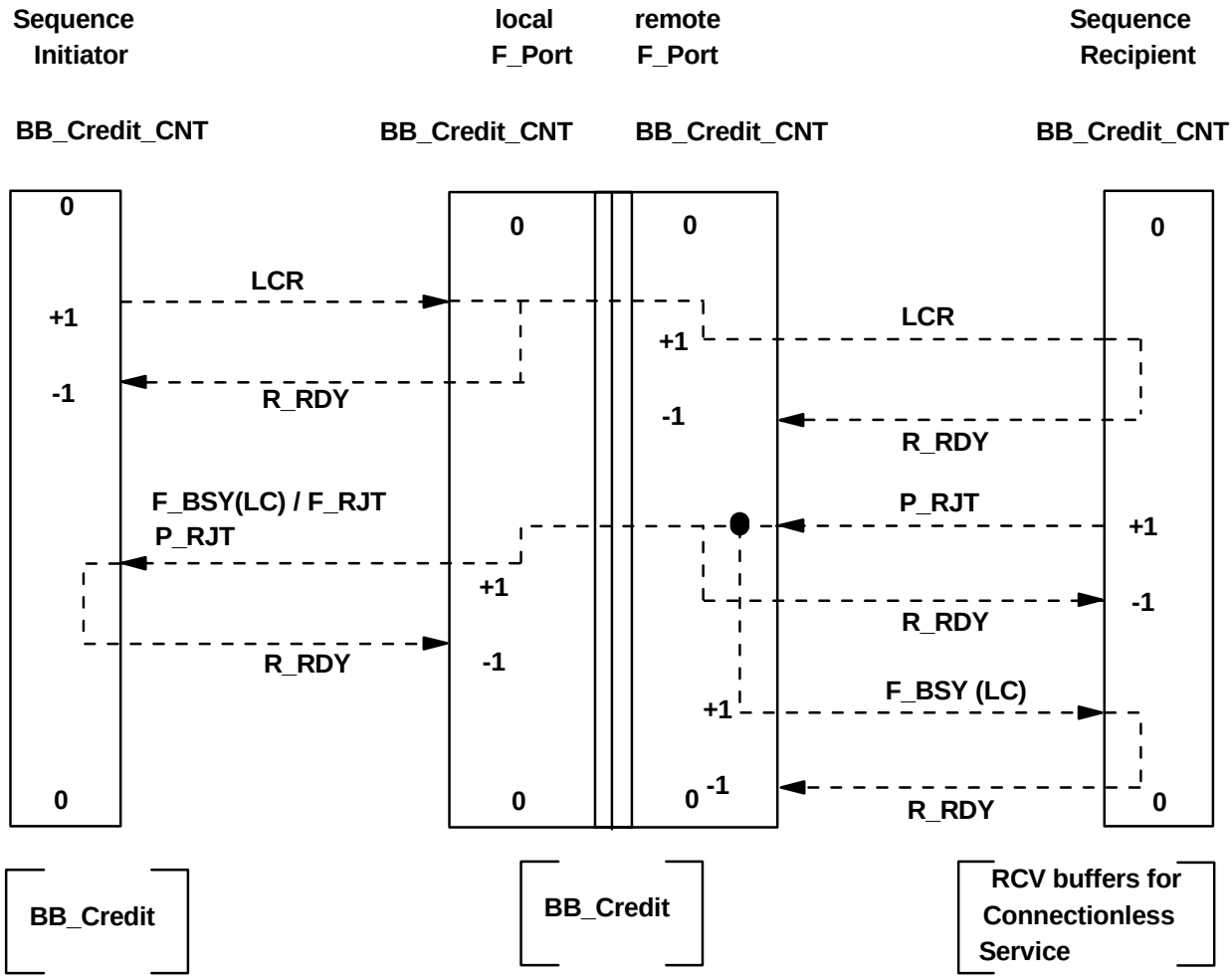


**Figure 33 - LCR flow control model**

--`,,```,,,,````-`-`,,`,,`,`,,`---
Copyright International Organization for Standardization
Provided by IHS under license with ISO
No reproduction or networking permitted without license from IHS
Not for Resale

**Table 252 - Integrated Class 2 flow control management**

| Activity | Nx_Port | | Fx_Port |
|---|---|---|---|
| | EE_Credit_CNT | BB_Credit_CNT | BB_Credit_CNT |
| Port transmits a Class 2 Data frame | Increment by one | Increment by one | Increment by one |
| Port transmits an LCR | Reinitializes to Login value | Increment by one | Increment by one |
| Port receives R_RDY | N/A | Decrement by one | Decrement by one |
| Port receives F_BSY(DF), F_RJT, P_BSY, or P_RJT | Decrement by one | N/A | N/A |
| Port receives F_BSY(LC) | N/A | N/A | N/A |
| Port receives ACK_1 (Parameter field: History bit = 1, ACK_CNT = 1) | Decrement by one | N/A | N/A |
| Port receives ACK_1 (Parameter field: History bit = 0, ACK_CNT = 1) | a) subtract 1 for current SEQ_CNT of the ACK_1<br>b) subtract all unacknowledged lower SEQ_CNTs (see 11.2.2.3) | N/A | N/A |
| Port receives ACK_0 (Parameter field: History bit = 0, ACK_CNT = 0) | N/A (see 11.2.2.3) | N/A | N/A |
| Port receives an LCR | N/A[a] | N/A | N/A |
| Port receives a Class 2 Data frame | N/A | N/A | N/A |
| Port transmits R_RDY | N/A | N/A | N/A |
| Port transmits F_BSY, F_RJT, P_BSY, P_RJT, or ACK | N/A | +1 | +1 |

[a] On receipt of LCR, the Sequence Recipient resets buffer (see 11.2.4)

Copyright International Organization for Standardization
Provided by IHS under license with ISO
No reproduction or networking permitted without license from IHS Not for Resale

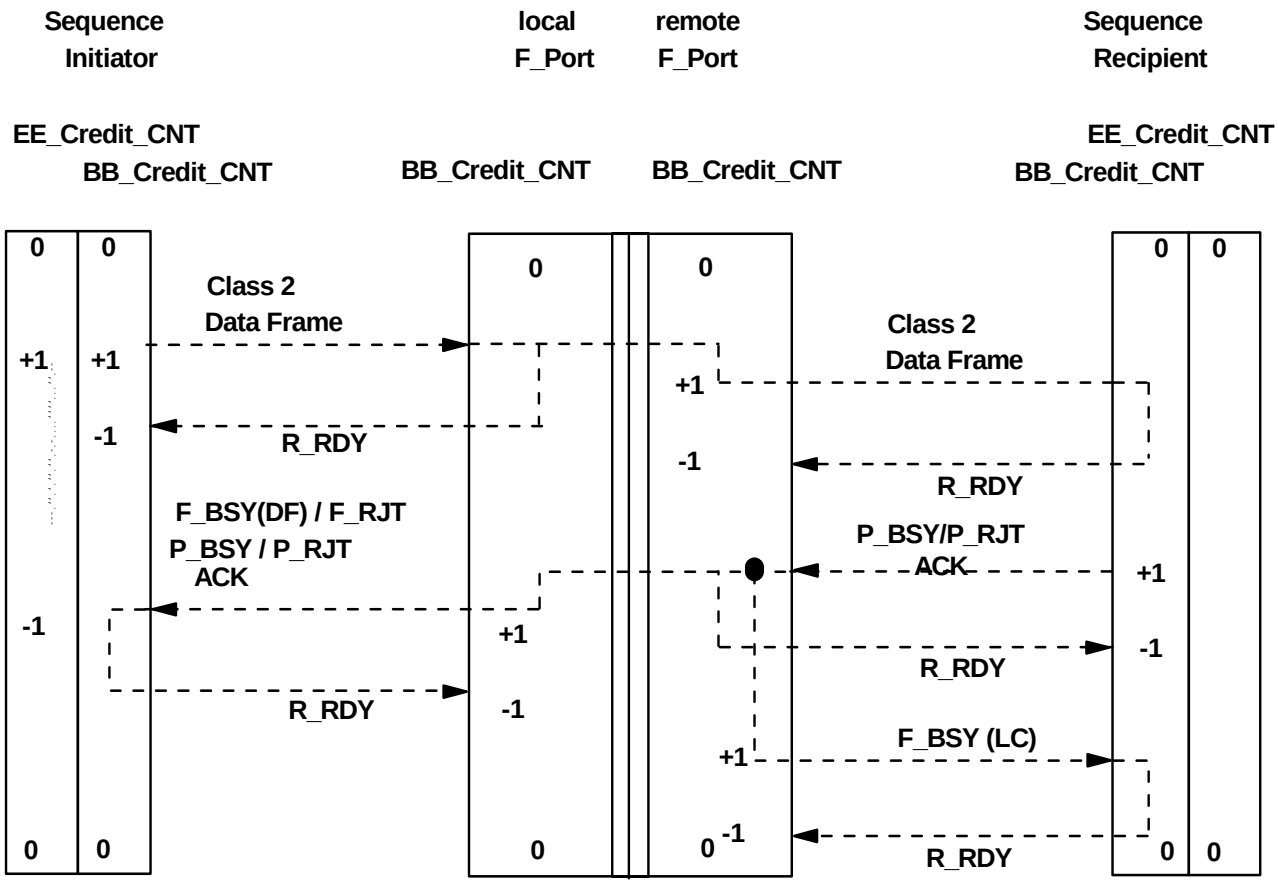


**Figure 34 - Integrated Class 2 flow control**

Copyright International Organization for Standardization
Provided by IHS under license with ISO
No reproduction or networking permitted without license from IHS
Not for Resale

# 19 Segmentation and reassembly

## 19.1 Introduction

Segmentation and reassembly are the FC-2 functions provided to subdivide application data corresponding to an Information Category to be transferred into Payloads, compute relative offset values, embed each Payload and the corresponding relative offset value in an individual frame, transfer these frames over the link, and reassemble at the receiving end the application data of the Information Category as sent by the sending end.

Mapping application data to Upper Level Protocols (ULPs) is outside the scope of this standard. ULPs maintain the status of application data transferred.

## 19.2 Sending end

### 19.2.1 Introduction

An upper level (a level above FC-2) at the sending end shall define a relative offset space for each Information Category for which relative offset usage is supported. An upper level specifies a data block to be transferred within a Sequence.

### 19.2.2 Relative offset space

The relative offset space shall start from zero, representing an upper level-defined origin, and extend to its highest value. Application data for an Information Category transferred may be mapped to all or portions of relative offset space.

### 19.2.3 Data block

A data block is an upper level construct of application data related to a single Information Category and transferred within a single Sequence. If continuously increasing relative offset is used, a data block shall be specified. A data block may map to all or part of relative offset space of the Information Category. An upper level shall specify an initial relative offset for each data block. The initial relative offset value may be zero or non-zero.

Data blocks may be divided into portions for transfer, only if the Sequence Recipient supports random relative offset. An upper level shall specify an initial relative offset for each portion. The initial relative offset value may be zero or non-zero. The initial relative offset values for portions of a given Information Category transmitted consecutively are allowed to be random.

A data block for a single Information Category may map to portions or all of relative offset space for the Information Category.

### 19.2.4 Sequence

The data blocks to be transferred within a single Sequence and the Information Category for each data block shall be specified to FC-2 by an upper level. An upper level shall specify the portions of data blocks to be transferred within a Sequence and the information Category for each portion to FC-2.

### 19.2.5 Relationship between Sequences

An upper level shall specify the relative offset relationship between multiple Sequences of a given Information Category. This relationship is transparent to FC-2.

--`,,```,,,,````-`-`,,`,,`,`,,`---

Copyright International Organization for Standardization
Provided by IHS under license with ISO
No reproduction or networking permitted without license from IHS Not for Resale

## 19.3 FC-2

### 19.3.1 Mechanisms

FC-2 mechanisms to support this function are

a) relative offset or SEQ_CNT,
b) Sequence, and
c) F_CTL bit indicating the presence of relative offset in the parameter field (see 9.7)

### 19.3.2 Relative offset

The Parameter field in the Frame_Header may be used to hold the value of relative offset that is the relative displacement of first byte of Payload related to an upper level-defined origin for a given Information Category.

### 19.3.3 SEQ_CNT

If relative offset is not used for reassembly, the Information Category shall be reassembled using the SEQ_CNT. The reassembly shall be performed by joining or concatenating the Payloads of the Data frames in the continuously increasing order of SEQ_CNTs starting from the SEQ_CNT of the first Data frame to that of the last Data frame of a given Sequence.

For an Information Category i within a given Sequence, the reassembly is expressed as:

Application $data_i = PL_i (m) || PL_i (m+1) || ooo || PL_i (m+n)$ where
where
a) PL (m) represents Payload of a frame with SEQ_CNT m
b) n is the total frame count within the Sequence
c) m is the lowest SEQ_CNT (zero or non-zero) and
d) m+n is the highest SEQ_CNT.

If the SEQ_CNT wraps to zero from hex 'FF FF' within a Sequence, the reassembly shall be continued according to modulo 65 536 arithmetic (i.e., SEQ_CNT = hex ’00 00’ follows SEQ_CNT = hex 'FF FF').

## 19.4 Login

The following Common Service Parameters related to segmentation and reassembly are interchanged during N_Port Login (see 15.6.2):

a) relative offset by Information Category and
b) continuously increasing or random relative offset

Through the interchange of these Login parameters, the Sequence Recipient indicates its relative offset requirements to the Sequence Initiator. The Sequence Recipient indicates relative offset support or non-support for each Information Category. For the relative offset supported Information Categories, the Sequence Recipient collectively indicates continuously increasing or random relative offset requirement.

The Sequence Initiator shall follow the relative offset requirements of the Sequence Recipient, for Information Categories supported and not supported.

## 19.5 Segmentation rules

Segmentation summary rules are listed and referred to table 253:

a) The Sequence Initiator shall be responsible for segmentation. The Sequence Initiator shall follow the relative offset requirements of the Sequence Recipient for Information Categories.
b) An upper level at the sending end shall specify to the sending FC-2 one or more data blocks to be transferred as a Sequence, the Information Category for each data block, an relative offset space, and the initial relative offset for each Information Category. The initial relative offset value may be zero or non-zero.
c) The Sequence Initiator shall use the specified relative offset space for each Information Category and transfer one or more data blocks specified in a single Sequence.
d) If the Sequence Recipient does not support relative offset for one or more Information Categories, the Sequence Initiator shall transmit each of these Information Categories as a contiguous data block. The Sequence Initiator shall set the relative offset present bit in F_CTL to zero, indicating that the parameter field is not meaningful.
e) If the Sequence Recipient supports relative offset for one or more Information Categories and has specified during Login this support as continuously increasing relative offset, the Sequence Initiator shall transmit each of these Information Categories with continuously increasing relative offset.

   A) The Sequence Initiator shall set the relative offset present F_CTL bit to one.

   B) The Sequence Initiator shall use the initial relative offset specified by the upper level for the relative offset $RO_i$ in the first frame of the data block, namely, $RO_i(0)$ = initial relative offset for the Information Category i
   C) The Sequence Initiator shall use for all other frames of the data block, the relative offset computed as follows: $RO_i(n+1) = RO_i(n)$ + Length of $Payload_i(n)$ where n is $\geq 0$ and represents the consecutive frame count of frames for a given Information Category within a single Sequence.
   D) Above steps A) through C) shall be repeated for each data block within the Sequence.
f) If the Sequence Recipient supports relative offset for one or more Information Categories and has specified during Login this support as random relative offset, the Sequence Initiator is permitted to transmit each of these Information Categories with random relative offset.

   A) The Sequence Initiator shall set the relative offset present F_CTL bit to one.

   B) The Sequence Initiator shall use the initial relative offset specified by the upper level for the relative offset ROi in the first frame of the data block, namely, ROi (0) = initial relative offset for the Information Category i
   C) The Sequence Initiator shall use for all other frames of the data block, the relative offset computed as follows: ROi(n+1) = ROi(n) + Length of Payloadi(n) where n is $\geq 0$ and represents the consecutive frame count of frames for the data block for a given Information Category within a single Sequence.
   D) Above steps A) through C) shall be repeated for each data block within the Sequence.

## 19.6 Reassembly rules

Reassembly rules are listed and referred to table 253.

a) The Sequence Recipient shall be responsible for reassembly of each Information Category received within the Sequence. The Sequence Recipient shall use relative offset or SEQ_CNT field, as specified, to perform the reassembly and make the data blocks available to the receiving upper level as sent by the sending upper level.
b) The Sequence Recipient shall reassemble each Information Category within its relative offset space specified by the sending upper level.
c) If the Sequence Recipient has specified during Login non support of relative offset for one or more Information Categories, the Sequence Recipient shall verify that the relative offset present bit (F_CTL bit 3) is set to zero and reassemble each of these Information Categories using SEQ_CNT.
   If the relative offset bit (F_CTL bit 3) is set to one for any of these Information Categories, the Sequence Recipient shall issue a P_RJT with a reason code of "relative offset not supported."

Copyright International Organization for Standardization
Provided by IHS under license with ISO
No reproduction or networking permitted without license from IHS Not for Resale

d) If the Sequence Recipient has indicated during Login relative offset support for one or more Information Categories and specified this support as continuously increasing relative offset, the Sequence Recipient shall verify that the relative offset present bit (F_CTL bit 3) is set to one and assemble each of these Information Categories using relative offset.
If the Sequence Initiator lacks the relative offset capability and has set the bit to zero, the Sequence Recipient shall use SEQ_CNT for reassembly.

e) If the Sequence Recipient has indicated during Login relative offset support for one or more Information Categories and specified this support as random relative offset, the Sequence Recipient shall verify that the relative offset present bit (F_CTL bit 3) is set to one and assemble each of these Information Categories using relative offset.
If the Sequence Initiator lacks the relative offset capability and has set the bit to zero, the Sequence Recipient shall use SEQ_CNT for reassembly.

f) If the Sequence Recipient supports continuously increasing relative offset and detects random relative offsets, the Sequence Recipient shall issue P_RJT with the reason code of "Invalid Parameter field".

g) If the Sequence Recipient has indicated during Login relative offset support for one or more Information Categories and if the relative offset value in the Parameter field would cause transfer of data outside of vendor specific bounds enforced by the Sequence Recipient, the Sequence Recipient shall issue a P_RJT with a reason code of "Invalid Parameter field".

**Table 253 - Segmentation and reassembly rules summary**

| Case | Relative Offset support by Sequence Recipient | Sequence Initiator action (Segmentation) | Sequence Recipient action (Reassembly) |
|---|---|---|---|
| 1 | Not supported | F_CTL relative offset present bit = 0<br>Parameter field meaning is protocol and Information Unit specific | Relative offset shall not be used (ignore parameter field)<br>SEQ_CNT shall be used |
| | | F_CTL relative offset present bit = 1<br>Parameter field = relative offset | Use P_RJT<br>reason code = relative offset not supported |
| 2 | Continuously increasing relative offset supported | F_CTL relative offset present bit = 1<br>Parameter field = relative offset<br>First frame of a data block: $RO_i$ (0) = initial relative offset for the data block specified<br>All other frames of the data block: $RO_i$ (n + 1) = $RO_i$ (n) + Length of $Payload_i$ (n) | Relative offset shall be used |
| | | F_CTL relative offset present bit = 0<br>Parameter field meaning is protocol and Information Unit specific | Ignore parameter field<br>SEQ_CNT shall be used |
| 3 | Random relative offset supported | F_CTL relative offset present bit = 1.<br>Parameter field = relative offset.<br>The Initial relative offset for a data block is permitted to be random. | Relative offset shall be used |
| | | F_CTL relative offset present bit = 0<br>Parameter field meaning is protocol and Information Unit specific | Ignore parameter field<br>SEQ_CNT shall be used |

Copyright International Organization for Standardization
Provided by IHS under license with ISO
No reproduction or networking permitted without license from IHS
Not for Resale

# 20 Connection management

## 20.1 Introduction

### 20.1.1 Establishing a Connection

Class 1 and Class 6 Service is based on establishing a dedicated connection between a source Nx_Port and a destination Nx_Port. The dedicated connection guarantees that the full bandwidth of the Link is available to each Nx_Port.

In order to establish a Class 1 and Class 6 dedicated connection, the source Nx_Port shall transmit a Data frame to a destination Nx_Port with a $SOF_{c1}$ delimiter. The Data Field size of the connect-request frame is limited by the maximum buffer-to-buffer Receive Data_Field size specified by the Common Service Parameters of the Fabric (or point-to-point Nx_Port) or by the maximum Receive Data_Field size specified by the destination Nx_Port, whichever is smaller.

The Nx_Port shall receive an R_RDY Primitive Signal to indicate that the connect-request frame was received successfully and a buffer in the Fx_Port or Nx_Port is available. No additional frames shall be transmitted for the pending Connection until the ACK frame has been received. When the Nx_Port transmitting the connect-request receives an ACK_0 or ACK_1 with an $SOF_{n1}$ and with the appropriate S_ID and D_ID fields of the connect-request frame, a dedicated connection is established.

NOTE 1 A Connection is established from the Nx_Port's perspective (Connection Initiator) at the time the Nx_Port receives the ACK frame. It has no relation to the method or timing by which the Fabric actually forms the dedicated connection.

NOTE 2 It is recommended that a Fabric not introduce a phase discontinuity (see [8], FC-PI-2 and [1], 10GFC) while establishing a Class 1 Connection. No frame errors are introduced by such a discontinuity.

When a dedicated connection is established:

a) Both Nx_Ports shall re initialize their end-to-end Class 1 and Class 6 Credit to the Login values.
b) the Nx_Port initiating the connection shall be known as the Connection Initiator and the Nx_Port responding to the connect-request shall be known as the Connection Recipient.
c) the Connection Initiator may continue the initial Sequence, and
d) the Connection Recipient may initiate new Sequences with an $SOF_{i1}$ delimiter when a dedicated connection is not unidirectional, as indicated by the setting of F_CTL bit 8 (see 20.5.4).

### 20.1.2 Removing a Connection

Removing a dedicated connection is accomplished by either Nx_Port transmitting a frame terminated by an $EOF_{dt}$ or the transmission or reception of the Link Reset Primitive Sequence. Normally, removing a dedicated connection shall be negotiated between the two Nx_Ports involved. Negotiation is required in order to avoid breaking the dedicated connection while frames are still flowing between the Nx_Ports.

In situations that do not require the use of the Link Reset Primitive Sequence, an Nx_Port may request the immediate removal of a dedicated connection by transmitting the Remove Connection Basic Link Service frame. The ACK frame transmitted in response shall end with an $EOF_{dt}$ delimiter.

The Fabric terminates a dedicated connection after an $EOF_{dt}$ or $EOF_{dti}$ passes through the Fx_Port in either direction. Any frames flowing in either direction at the time the Connection is removed may be corrupted.

End_Connection (E_C) is the control bit in F_CTL that is used to perform the negotiation.

### 20.1.3 Preempting a dedicated connection

Interrupting and removing a Class 1 or Class 6 Dedicated Connection between Nx_Ports and making the Fabric

--`,,```,,,,````-`-`,,`,,`,`,,`---

Copyright International Organization for Standardization
Provided by IHS under license with ISO
No reproduction or networking permitted without license from IHS Not for Resale

and Nx_Port resources previously consumed by the dedicated connection available is Preemption. A Preemption is initiated by an Nx_Port sourcing a Preemption Request frame (an SOFx with the Preemption flag set, Word 1 bit 24 along with F_CTL bit 17 set to one) to the Fabric.

The preemptor Nx_Port, sourcing other than a Class 3 Preemption Request frame, then receives

a) a reject Link_Response frame (F_RJT) with either a “Preemption Request Rejected” or a “Preemption not enabled” reason code, or
b) a connection acknowledges (ACK_1 or ACK_0) with an SOFx having the appropriate S_ID and D_ID fields of the preemption request frame.

When the ACK is received either a new dedicated connection has been established or the Class 2 Preemption Request frame was successfully received by the destination Nx_Port. If an F_RJT is received, the Preemption Request was not successful and the preemption request process has ended.

NOTE Fabric resolution of a preemption request may be based on the priority of the connection request (established when the connection request was processed by the Fabric) and the priority of the preemption request as provided to the Fabric in Word 1, bits 31 to 25 of the preemption request SOFx header. If priority is used for preemption request resolution, a preemption request shall be rejected with a “Preemption request rejected” reason code if the preemption request priority is equal to or less than the connection being preempted.

Once a preemption request results in the preemption of a dedicated connection all normal frame forwarding or Dedicated Connection rules (as appropriate) defined in this standard shall be followed.

### 20.1.4 Frame processing precedence

There are a number of different fields within a frame that affect the processing for establishing and removing dedicated connections. The general precedence hierarchy follows:

a) Frame delimiters (SOFc1, EOFdt),
   A) R_CTL
   B) Data frame, or
   C) Link_Control frame.
b) F_CTL
   A) Unidirectional Connection, when meaningful (bit 8),
   B) End_Sequence (bit 19),
   C) other bits when meaningful (e.g., if bit 19 = 1, check End_Connection) as specified in tables 35 and 36.

## 20.2 Applicability

Connection management applies to Class 1 and Class 6 Service. An Nx_Port supporting Class 1 or Class 6 Service may also support Class 2 and Class 3. Depending on the options supported by the Fabric, multiple class support by an Nx_Port may be complex. Because Class 1 and Class 6 involve dedicated connections, managing Class 1 and Class 6 usually overrides Class 2 or 3 management during periods of connection. This standard specifies the allowable responses on a class by class basis.

NOTE An Nx_Port engaged in Class 2 communication with another Nx_Port may experience Sequence timeouts if the other Nx_Port supports Class 1 and Class 2 without functioning in Intermix mode and a Class 1 Connection is created to the other Nx_Port.

--`,,```,,,,````-`-`,,`,,`,`,,`---

Copyright International Organization for Standardization
Provided by IHS under license with ISO
No reproduction or networking permitted without license from IHS Not for Resale

## 20.3 Topology models

### 20.3.1 Introduction

An Nx_Port may be attached directly to another Nx_Port through a point-to-point connection or through a Fabric. The topology may be determined using the explicit Login procedure. Topology may also be determined by a method not defined by this standard.

### 20.3.2 Fabric model

The Nx_Port behavior described in this clause is based on a Fabric model in which an Fx_Port acts as the control point for establishing and removing Class 1 and Class 6 connections on behalf of the locally attached Nx_Port.

The following terminology is used in the discussion of Connection management. Nx_Port (A), (B), or (X) represent three separate N_Port_IDs where A ≠ B ≠ X. The side of the Fx_Port directly attached to the Nx_Port side is termed its Link side, whereas the side of the Fx_Port attached internally to the Fabric is termed its internal side.

The following Fx_Port characteristics are required behavior:

a) When an Fx_Port is not connected, it may receive a connect-request and begin processing that request. The process of acting on that request is termed accepting the connect-request.
b) After an Fx_Port has accepted a connect-request from the Link, it reserves Fabric resources as it attempts to establish the requested dedicated connection.
   A) the Fx_Port is Busy to other connect-requests from its internal side as destination Nx_Port.
   B) the Fx_Port returns an F_BSY with $EOF_{dt}$ to the Link if a busy condition is encountered (If a Fabric supports stacked connect-requests, the period of time before issuing an F_BSY may be extended).
   C) the Fx_Port returns an F_RJT with $EOF_{dt}$ to the Link if a reject condition is satisfied.
c) After an Fx_Port has accepted a connect-request from the internal side:
   A) it passes the connect-request to the Link as the destination Nx_Port.
   B) it monitors its Link side for a proper confirmation response frame expected in response to the delivered connect-request.
   C) it discards connect-request frames ($SOF_{c1}$) received from its Link side. If the Fabric supports stacked connect-requests, the connect-request received from its Link side shall be stacked for establishing a dedicated connection at a later time.
d) If an Fx_Port encounters a collision case wherein connect-requests from both the internal side and the Link side arrive simultaneously, the Fx_Port accepts the connect-request from the internal side and proceeds as in step c above.
e) If a failure is detected within a Fabric such that a dedicated connection is no longer used, the Fabric may notify each of the Fx_Ports attached to the Nx_Ports involved in an established or pending dedicated connection and each of the Fx_Ports may then transmit the Link Reset Primitive Sequence to its locally attached Nx_Port (i.e., initiate Link Reset Protocol).
   See 5.5.4 for information on the effect of Primitive Sequences on Fx_Ports.

### 20.3.3 Point-to-point model

A point-to-point topology is indicated during the Login procedure. Two Nx_Ports arranged in a point-to-point connection may choose to:

a) establish one dedicated connection for the duration of an operating period, or
b) establish and remove dedicated connections dynamically, as the need to communicate arises.

--`,,```,,,,````-`-`,,`,,`,`,,`---

Copyright International Organization for Standardization
Provided by IHS under license with ISO
No reproduction or networking permitted without license from IHS Not for Resale

## 20.4 Connect/disconnect rules

### 20.4.1 Connect-request rules

#### 20.4.1.1 Source of connect-request

See 20.3 for the definition of Nx_Port (A), Nx_Port (B) and Nx_Port (X).

The following rules specify the connect-request procedure as the source (A) of the connect-request:

a) An Nx_Port (A) shall initiate a connect-request using a Data (Device_Data or Link_Data) frame with an $SOF_{c1}$ delimiter directed to destination Nx_Port (B). The connect-request frame is formed as follows:
   A) an $SOF_{c1}$ delimiter
   B) a Data (Device_Data or Link_Data) frame
   C) an S_ID of Nx_Port (A) and a D_ID of Nx_Port (B)
   D) the E_C bit (F_CTL bit 18) shall be set to zero
   E) the Unidirectional bit (F_CTL bit 8) shall be set to zero for a bi-directional Connection, and to one for a unidirectional Connection
   F) an $EOF_n$ ending delimiter
b) The Data Field of the connect-request shall be limited to the smaller of
   A) the maximum buffer-to-buffer Receive_Data_Field size specified by the Fabric, if present, or
   B) the maximum Receive_Data_Field size specified by the destination Nx_Port.
c) After Nx_Port (A) transmits the connect-request frame, Nx_Port (A) shall wait for a response frame before transmitting another frame for this Sequence. Additional Sequences for this Connection shall not be initiated until the dedicated connection is established.
d) A dedicated connection is established when an ACK frame has responded to the connect-request frame. A proper response frame consists of an ACK_1 or ACK_0 frame with
   A) an $SOF_{n1}$ delimiter
   B) an S_ID of Nx_Port (B), and a D_ID of Nx_Port (A)
   C) an $EOF_n$, or $EOF_t$ delimiter
e) The destination Nx_Port, as an alternative response, may also send a P_BSY or P_RJT with:
   A) an $SOF_{n1}$ delimiter,
   B) an S_ID of Nx_Port (B), and a D_ID of Nx_Port (A), and
   C) an $EOF_{dt}$ delimiter.
f) The Fabric, as an alternative response, may also send an F_BSY or F_RJT frame with:
   A) an $SOF_{n1}$ delimiter,
   B) an S_ID of (B), and a D_ID of (A), and
   C) an $EOF_{dt}$ ending delimiter.
g) After a dedicated connection is established, Nx_Port (A) shall be the Connection Initiator and Nx_Port (B) shall be the Connection Recipient.
h) After a dedicated connection is established (i.e., the ACK to the connect-request has been received), the Connection Initiator, Nx_Port (A), may continue transmitting its initial Sequence and initiate other Sequences with $SOF_{i1}$ up to Nx_Port (B)'s ability to support Concurrent Sequences.

Copyright International Organization for Standardization
Provided by IHS under license with ISO
No reproduction or networking permitted without license from IHS Not for Resale

#### 20.4.1.2 Destination of connect-request

The following rules specify the connect-request procedure at the destination Nx_Port (B) of the connect-request:

a) If a Data frame started by $SOF_{c1}$ is received when Nx_Port (B) is not connected and Nx_Port (B) is busy, Nx_Port (B) responds with P_BSY with an $EOF_{dt}$ delimiter as specified in 20.4.1.1 item number e).
b) If a Data frame started by $SOF_{c1}$ is received when Nx_Port (B) is not connected and Nx_Port (B) rejects the connect-request, Nx_Port (B) responds with P_RJT with an $EOF_{dt}$ delimiter as specified in 20.4.1.1 item number e).
c) If a Data frame started by $SOF_{c1}$ is received when Nx_Port (B) is not connected and not busy, Nx_Port (B) responds with the proper response frame. A proper response frame is defined in 20.4.1.1 item number d). A dedicated connection is established with Nx_Port (A). Nx_Port (B) shall be the Connection Recipient and Nx_Port (A) shall be the Connection Initiator.
d) With a Fabric present, if Nx_Port (B) receives a connect-request frame from Nx_Port (X) after a connect-request has been transmitted by Nx_Port (B), Nx_Port (B) requeues its own request for transmission at a later time and responds with a proper response frame to Nx_Port (X).

NOTE Nx_Port (B) requeues its original connect-request because the Fabric has discarded it. Nx_Port (B) needs to adjust its end-to-end Credit_CNT to account for the discarded connect-request.

   If stacked connect-requests are being employed, the connect-request shall not be requeued by Nx_Port (B).
   A dedicated connection is established with Nx_Port (X) with Nx_Port (B) as Connection Recipient.
e) Without a Fabric present, if Nx_Port (B) accepts a connect-request frame from Nx_Port (A) after a connect-request has been transmitted by Nx_Port (B), Nx_Port (B) shall respond as follows:

   A) if A > B, in value,

      a) Nx_Port (B) requeues its own request for transmission at a later time,
      b) responds to (A) with a proper response frame,
      c) a dedicated connection is established with Nx_Port (A) with Nx_Port (B) as Connection Recipient, and
      d) Nx_Port (B) may reinitiate its connect-request Sequence using $SOF_{i1}$.

   B) if A < B, in value,
      a) Nx_Port (B) discards connect-request from Nx_Port (A), and
      b) waits for a proper response frame.

f) After a dedicated connection is established (i.e., the ACK to the connect-request is transmitted), Nx_Port (B) may begin initiating Sequences with $SOF_{i1}$ up to the destination Nx_Port's ability to support Concurrent Sequences when the Connection is bi-directional.

### 20.4.2 Connection Rules

The following are the connection rules:

a) If a bi-directional Connection is established (F_CTL bit 8 = 0 on connect-request), it shall remain bi-directional for the life of the Connection.
b) If a unidirectional Connection is established (F_CTL bit 8 = 1), it shall remain unidirectional until the Connection Initiator sets F_CTL bit 8 to zero, if ever, on the first or last frame of a Sequence (see 9.7.12) subsequent to the connect-request frame.
c) If a unidirectional Connection is made bi-directional, it shall remain a bi-directional Connection for the life of the Connection.
d) The Connection Recipient may request that a unidirectional Connection be made bi-directional by setting F_CTL bit 8 to zero on an ACK in response to a Data frame. Once F_CTL bit 8 is set to zero on an ACK, it shall remain set to zero for the life of the Connection.

--`,,```,,,,````-`-`,,`,,`,`,,`---

Copyright International Organization for Standardization
Provided by IHS under license with ISO
No reproduction or networking permitted without license from IHS Not for Resale

### 20.4.3 Remove Connection rules

The following are the remove connection rules:

a) An active Sequence is complete when the corresponding ACK response to the last Data frame has been transmitted by the Sequence Recipient from the Recipient's perspective and has been received by the Sequence Initiator from the Initiator's perspective.
b) If an Nx_Port detects an abnormal condition that requires immediate removal of an existing Connection, the Nx_Port shall use the Remove Connection (RMC) Basic Link Service frame with the appropriate F_CTL bit settings that includes setting the E_C bit = 1 in order to remove the dedicated connection. All open Class 1 Sequences are abnormally terminated and left in an indeterminate state relative to the Upper Level Protocol. RMC shall not be used in place of Link Reset in protocols, that require Link Reset.
c) An Nx_Port shall transmit the E_C bit in F_CTL set to one on the last Data frame of a Sequence to indicate:
   A) it is ready to end the Connection,
   B) it shall not initiate any new Sequences, and
   C) it requests the other Nx_Port to complete its active Sequences and not initiate any new Sequences.
d) If an Nx_Port has transmitted the E_C bit in F_CTL set to one and it receives a Data frame initiating a new Sequence, it shall respond as though the Sequence had been initiated before the E_C bit had been transmitted as one.
e) If either the Connection Initiator or Connection Recipient has completed its last active Sequence of the existing Connection and it receives a Data frame with E_C set to one, it shall transmit the corresponding ACK with an $EOF_{dt}$ delimiter.
f) If either the Connection Initiator or Connection Recipient receives a Data frame with the E_C bit set to one and it has not completed all of its active Sequences, it
   A) does not initiate any new Sequences (unless C_S bit is received),
   B) completes active Sequences,
   C) transmits the E_C bit set to one on the last Data frame of its last active Sequence for the Connection.
g) If an Nx_Port encounters a collision case wherein a Data frame has been transmitted with E_C set to one and a Data frame is received with E_C set to one before receiving its ACK,
   A) the Connection Recipient shall respond with an ACK with an $EOF_t$ delimiter, whereas
   B) the Connection Initiator shall withhold transmitting ACK until after its Sequence is complete.
   C) the Connection Initiator shall transmit the ACK with the $EOF_{dt}$ delimiter.

## 20.5 Establishing a Connection

### 20.5.1 Introduction

A dedicated connection is established with an Nx_Port as the source of a connect-request (Connection Initiator) or as the destination Nx_Port (Connection Recipient) of a connect-request from another Class 1 or Class 6 Nx_Port.

### 20.5.2 Connection Initiator

When FC-2 receives a request from an FC-4 or upper level to initiate a Class 1 or Class 6 Sequence when a dedicated connection does not exist, the Nx_Port shall also establish a Class 1 or Class 6 Connection with the destination Nx_Port as part of the Sequence initiation.

The Nx_Port (A) initiates the connect-request using a Data (Device_Data or Link_Data) frame with a $SOF_{c1}$ delimiter. The Data Field size is limited to the smaller of:

a) the maximum buffer-to-buffer Receive_Data_Field size specified by the Fabric, if present, or
b) the maximum Receive_Data_Field size specified by the destination Nx_Port.

--`,,```,,,,````-`-`,,`,,`,`,,`---
Copyright International Organization for Standardization
Provided by IHS under license with ISO
No reproduction or networking permitted without license from IHS Not for Resale

After the Nx_Port transmits the connect-request frame, no additional frames shall be transmitted for any Sequence for the pending Connection until a response frame has been received. The Nx_Port receives an R_RDY Primitive in response to the connect-request to indicate successful delivery to the Fx_Port or Nx_Port and that a buffer is available for a connectionless frame. If an N_Port is not operating in Intermix mode, the Nx_Port shall not transmit Class 2 or 3 frames until the pending dedicated connection is removed. A dedicated connection is not established until a proper ACK frame is received from the destination Nx_Port. A proper ACK frame is defined in 20.4.1.1 item number d).

Table 254 defines Event 1 as the connect-request and events 2 through 9 define the possible responses.

**Table 254 - Responses to connect-request ($SOF_{c1}$)**

| Event | SOF | D_ID | S_ID | Frame | EOF | Nx_Port Action |
|---|---|---|---|---|---|---|
| 1) | $SOF_{c1}$ | B | A | Data Frame | $EOF_n$ | • Transmit connect-request<br>• Wait for confirmation frame |
| 2) | $SOF_{n1}$ | A | B | F_BSY | $EOF_{dt}$ | Connection failed, Busy in Fabric |
| 3) | $SOF_{n1}$ | A | B | P_BSY | $EOF_{dt}$ | Connection failed, Busy in Nx_Port |
| 4) | $SOF_{n1}$ | A | B | F_RJT | $EOF_{dt}$ | Connection failed, Fabric Reject |
| 5) | $SOF_{n1}$ | A | B | P_RJT | $EOF_{dt}$ | Connection failed, Port Reject |
| 6) | $SOF_{n1}$ | A | B | ACK_1 or ACK_0 | $EOF_n$ or $EOF_{dt}$ | • dedicated connection established<br>• Continue transmitting Sequence<br>• Sequence ended, Connection established |
| 7) | $SOF_{c1}$ | A | B | Data frame | $EOF_n$ | Nx_Port A responds as follows PTP<br>If A > B in value,<br>• discard B's frame and wait for ACK response.<br>• Dedicated connection established with B. |
| | | | | | | PTP: If A < B in value,<br>• respond with $SOF_{n1}$ on ACK<br>• dedicated connection established with B.<br>• retransmit request associated with event 1 with $SOF_{i1}$ |
| 8) | $SOF_{c1}$ | A | X | Data frame | $EOF_n$ | Fabric is present.<br>• Requeue request associated with event 1 (unless stacked connect-requests used)<br>• Respond with $SOF_{n1}$ on ACK_0 or ACK_1<br>• Dedicated connection established with X. |
| 9) | | | | | | • Timeout, no response frame.<br>• Perform Link Reset Protocol. (see 7.6.3) |

**Event 1:** A connect-request is transmitted by Nx_Port (A) with an $SOF_{c1}$ delimiter with a destination of Nx_Port (B).

**Event 2:** An F_BSY indicates that the Fabric is unable to access the destination Nx_Port due to a busy condition internal to the Fabric. Try again later.

**Event 3:** A P_BSY indicates that the destination Nx_Port link facility is temporarily occupied with other activity and

Copyright International Organization for Standardization
Provided by IHS under license with ISO
No reproduction or networking permitted without license from IHS Not for Resale

unable to accept the connect-request. Try again later.

**Event 4:** An F_RJT indicates that the Fabric is unable to establish the dedicated connection. The reason code specifies the cause.

**Event 5:** A P_RJT indicates that the destination Nx_Port is unable to establish the dedicated connection. The reason code specifies the cause.

**Event 6:** A Dedicated connection has been established. Nx_Port (A) is Connected to Nx_Port (B).

Nx_Port (A) is the Connection Initiator and Nx_Port (B) is the Connection Recipient.

Nx_Port (A) may continue transmitting the Sequence initiated ($EOF_n$), or the Sequence that initiated the Connection may be complete ($EOF_t$).

Nx_Port (A) may initiate other Sequences with the same destination Nx_Port (B) up to the maximum number of Sequences defined by the Service Parameters obtained from (B) during Login.

The connected Nx_Port (B) may initiate Sequences using $SOF_{i1}$ to start each Sequence when the Connection is bi-directional. The number of active Sequences is limited by the Service Parameters provided by Nx_Port (A) during Login.

**Event 7:** In the case of a point-to-point (PTP) topology, if (A) is greater than (>) (B) in absolute value, then Nx_Port (A) discards the connect-request and waits for a response (Nx_Port (B) requeues request with $SOF_{i1}$).

In the case of a PTP topology where (A) < (B), Nx_Port (A) terminates its own previous connect-request with the intent of retransmission at a later time (i.e., requeues Event 1 with $SOF_{i1}$). Nx_Port (A) responds as the destination of the connect-request with an appropriate ACK frame and becomes the Connection Recipient. Nx_Port (B) is the Connection Initiator.

**Event 8:** In the case of a Fabric present, Nx_Port (A) terminates its own previous connect-request with the intent of retransmission at a later time (i.e., requeues Event 1 with $SOF_{i1}$ or $SOF_{c1}$, as appropriate). Nx_Port (A) responds as the destination of the connect-request with an appropriate ACK frame and becomes the Connection Recipient. Nx_Port (X) is the Connection Initiator. If stacked connect-requests are functional, then it is unnecessary to requeue its own previous connect-request.

**Event 9:** If a frame response is not received within the timeout period (E_D_TOV), a Link timeout shall be detected and the Link Reset Protocol shall be performed (see 7.6.3).

See 20.4.1 for the rules that a source Nx_Port of a connect-request shall follow.

### 20.5.3 Stacked connect-requests

Stacked connect-requests are a feature that may be provided by a Fabric (see clause 26). An Nx_Port during Login with the Fabric determines support for Stacked connect-requests. If Stacked connect-requests are functional, an Nx_Port may transmit one or more connect-requests ($SOF_{c1}$) without regard as to whether a Connection is pending, established, or complete.

The Fabric may process multiple connect-requests in any order and shall provide the status of the Stacked request via the Read Connection Status ELS command. Stacked connect-requests allow the Fabric to work on establishing a Connection while an Nx_Port is busy servicing another Connection and may enhance system performance. An Nx_Port uses the CR_TOV timeout period after a connect-request has been transmitted (part of Sequence timeout) whether the connect-request is a normal request or a Stacked request (i.e., an ACK response shall be received within a CR_TOV timeout period or an F_BSY shall be returned from the Fabric to the Nx_Port. If either condition is not met within CR_TOV, the Nx_Port detects a Sequence timeout and Connection Recovery (see 20.8) is performed). A Fabric that supports stacked connect-requests shall deal with any associated race conditions that occur during the establishment and removal of connections.

Copyright International Organization for Standardization
Provided by IHS under license with ISO
No reproduction or networking permitted without license from IHS Not for Resale

Due to the timing relationships involved, there are two methods of implementing stacked connect-requests by a Fabric:

a) transparent mode, or
b) lock-down mode.

In transparent mode, when the $SOF_{c1}$ Data frame is delivered to the destination Nx_Port, the return path of the bi-directional circuit is established in the same manner as Exclusive dedicated connections. As a result, the destination Nx_Port of the $SOF_{c1}$ is able to transmit Data frames immediately following transmission of the ACK frame in response to the $SOF_{c1}$ frame.

In lock-down mode, when the $SOF_{c1}$ Data frame is delivered to the destination Nx_Port, the return path of the bi-directional circuit is not necessarily established to the source Nx_Port of the $SOF_{c1}$. Therefore, the $SOF_{c1}$ Data frame shall also set F_CTL bit 8 = 1 (Unidirectional Transmit) in order to inhibit the destination Nx_Port of the $SOF_{c1}$ from sending any Data frames after the ACK frame is transmitted in response to the connect-request.

The ability of the Fabric to support Stacked Connect_requests is indicated by Word 0, bits 29 and 28 of the Fx_Port service parameters (see 15.6).

### 20.5.4 Unidirectional dedicated connection

When an Nx_Port transmits a connect-request, it may set F_CTL, bit 8 to one to indicate that a unidirectional dedicated connection is being established. Unidirectional means that only the Connection Initiator Nx_Port shall be able to transmit Data frames. The Connection Recipient Nx_Port shall only transmit ACK or Link_Response frames (P_BSY, P_RJT).

F_CTL bit 8 is meaningful on the first Data frame of a Sequence and the last Data frame of a Sequence. The Connection Initiator may set F_CTL bit 8 equal to zero at the end of the first Sequence (if multi-frame), or at the start or end of any subsequent Sequence. If F_CTL bit 8 = 0 on a meaningful Data frame (first or last) of a subsequent Sequence, the Connection becomes bi-directional for the remainder of the Connection.

To become bi-directional, a Connection Recipient of a unidirectional Connection may request that change by setting F_CTL bit 8 to zero in the ACK response to any Data frame in a Sequence. Once the Connection Recipient has transmitted F_CTL bit 8 = 0 on an ACK, it shall continue to do so for the remainder of the Connection (if set to 1, it shall be ignored). The request for a bi-directional Connection may not be honored by the Connection Initiator.

The unidirectional transmit bit (F_CTL bit 8) has three primary uses:

a) lock-down stacked connect-requests,
b) Connection Initiator with temporary receive buffer allocation problems (i.e., is unable to receive as much data as the end to-end Credit promised at Login due to buffering for transmit), or
c) an implementation that may only receive or transmit Data frames at any instant in time.

### 20.5.5 Destination of connect-request

When Nx_Port (B) is not connected, but is available, and it receives a connect-request as the destination Nx_Port, Nx_Port (B) transmits the appropriate ACK frame (ACK_1 or ACK_0) to Nx_Port (A) which is requesting the connection. After the ACK frame has been transmitted with $SOF_{n1}$, a dedicated connection is established with Nx_Port (A) as the Connection Initiator and Nx_Port (B) as the Connection Recipient. After a Connection has been established, Nx_Port (B) may initiate Sequences with Nx_Port (A) using an $SOF_{i1}$ delimiter.

If Nx_Port (B) is not connected, but is busy, and it receives a connect-request as the destination Nx_Port from Nx_Port (A), it responds with P_BSY with an $EOF_{dt}$ delimiter.

See 20.4.1 for the rules that a destination Nx_Port of a connect-request shall follow.

Copyright International Organization for Standardization
Provided by IHS under license with ISO
No reproduction or networking permitted without license from IHS Not for Resale

## 20.6 Connected

When an Nx_Port is in a dedicated connection, it may receive Sequences as the Sequence Recipient as well as initiate Sequences as the Sequence Initiator.

When an Nx_Port has acted as a Connection Initiator and is in a Unidirectional Connection, it may only initiate Sequences and shall not receive Sequences. When an Nx_Port has been the Connection Recipient and is in a Unidirectional Connection, it may only receive Sequences and shall not initiate Sequences.

## 20.7 Removing a Connection

### 20.7.1 Introduction

Class 1 Connections may be removed in four ways:

a) using the remove connection procedure that uses the E_C bit in F_CTL for negotiation,
b) the Remove Connection command, that forces the recipient Nx_Port to transmit $EOF_{dt}$,
c) the Link Reset Protocol, or
d) transmission or reception of any Primitive Sequence.

The first two methods use the $EOF_{dt}$ delimiter to remove the Connection. The third method uses the Link Reset Primitive Sequence to remove the Connection.

All Class 6 dedicated connections shall be Unidirectional dedicated connections.

### 20.7.2 When to remove a Connection

FC_FS does not specify the method to be employed in determining when to end a connection. Normally, an Nx_Port chooses to remove a dedicated connection when it has no Sequences to transmit to the Connected Nx_Port and it has a request to transmit Sequences to a different Nx_Port. In addition, F_CTL bits offer one alternative to suggest that removal might be appropriate (Continue Sequence condition bits) and one alternative that restricts an Nx_Port from removing a Connection while using the E_C bit in the normal remove connection procedure.

NOTE In order to maximize system utilization, an Nx_Port should remove a dedicated connection when it has no Data to transmit in order to be available for Connection to another Nx_Port.

Two information bits are available in F_CTL to indicate when the next Sequence of an Exchange is estimated to be transmitted: immediately (’01’ b), soon (’10’ b), or delayed (’11’ b). The indication of delayed transmission may be used as one condition to assist in determining the appropriate time to remove a dedicated connection.

### 20.7.3 End_Connection bit

An E_C bit in F_CTL is used during the remove connection procedure. By monitoring both transmission of the E_C bit as well as reception of the E_C bit, each Nx_Port is able to determine the appropriate circumstances to transmit an $EOF_{dt}$ in order to remove the connection. The E_C bit in F_CTL shall be set to zero on a connect-request frame ($SOF_{c1}$) in order to avoid ambiguous error scenarios where the ACK ($EOF_{dt}$) is not properly returned to the Connection Initiator.

E_C shall be transmitted as zero in a frame to indicate:

a) This Nx_Port wishes to maintain the existing dedicated connection.
b) This Nx_Port may transmit another Sequence within this Connection.
c) This Nx_Port may wait for a reply Sequence within this Connection.

--`,,```,,,,````-`-`,,`,,`,`,,`---
Copyright International Organization for Standardization
Provided by IHS under license with ISO
No reproduction or networking permitted without license from IHS Not for Resale

E_C shall be transmitted as one on a Data frame to indicate:

a) This Nx_Port is ready to remove the existing dedicated connection.
b) This Nx_Port has completed all active Sequences and agrees not to initiate another Sequence
c) This Nx_Port is requesting the destination Nx_Port to complete active Sequences in progress and not to initiate any new Sequences.

E_C shall be transmitted set to one on the last Data frame of the last active Sequence for this Connection to indicate that this Nx_Port requests the receiving Nx_Port to transmit $EOF_{dt}$ on the ACK response frame if the receiving Nx_Port has completed all active Sequences, otherwise, transmit an ACK frame with $EOF_t$. When the Nx_Port that received the E_C bit set to one is completing its last Sequence, it shall transmit the E_C bit set to one on the last Data frame of its last Sequence.

### 20.7.4 $EOF_{dt}$ transmission

$EOF_{dt}$ is transmitted by either the Connection Initiator or the Connection Recipient on an ACK frame corresponding to the last Data frame of a Sequence with the E_C bit set to one if the Nx_Port receiving the Data frame has completed its last active Sequence of the existing Connection.

If both Nx_Ports have transmitted their last Data frame of a Sequence with E_C set to one but have not received the ACK frame to complete the Sequence, the Connection Initiator delays transmitting ACK until it has received the ACK for its last Sequence. After the Connection Initiator has completed its last Sequence, it transmits the final ACK to the Connection Recipient with the $EOF_{dt}$ delimiter to remove the Connection.

The $EOF_{dt}$ is also used on the ACK responding to the RMC Basic Link Service command in order to immediately remove an existing Connection.

## 20.8 Connection Recovery

### 20.8.1 Introduction

In case of link errors, the state of the existing dedicated connection may not be known. When the state of the dedicated connection is unknown, the Link Reset Protocol shall be used to remove the Connection and establish a known state (see 7.6.3). Errors within a specific Sequence are processed according to the rules for handling Sequence errors (see 21.7).

For example, the following events provide instances when an Nx_Port is unable to determine the state of an existing dedicated connection and should perform the Link Reset Protocol. Nx_Port (A) believes that a dedicated connection exists with Nx_Port (B):

a) Nx_Port (A) receives an $SOF_{c1}$ from Nx_Port (C),
b) Nx_Port (A) receives an $SOF_{i1}$ from Nx_Port (C), or
c) Nx_Port (A) receives an $SOF_{n1}$ from Nx_Port (C).

### 20.8.2 Link timeout

When the last active Sequence during a Class 1 or Class 6 dedicated connection has detected a Sequence timeout, a Link Timeout is detected. For more discussion on Link Timeout see 21.2.3. The Link Reset Protocol is performed as described in 7.6.3.

### 20.8.3 Corrupted connect-request

If an Nx_Port is not engaged in a Class 1 or Class 6 dedicated connection, and it receives a frame started by $SOF_{i1}$ or $SOF_{n1}$ and the frame is detected as invalid, the Nx_Port discards the frame and performs the Link Reset Protocol.

Copyright International Organization for Standardization
Provided by IHS under license with ISO
No reproduction or networking permitted without license from IHS Not for Resale

## 20.9 Connection Preemption

### 20.9.1 Applicability

This preemption process applies only to the preemption of existing Class 1 or Class 6 connections. Other preemption processes may be defined that apply to other connection oriented classes.

### 20.9.2 Topology Model

An Nx_Port having the ability to be connected to another Nx_Port through a Fabric may be preempted. Any Nx_Port, if enabled, may cause a connection to be preempted.

### 20.9.3 Rules for Preemption

#### 20.9.3.1 Preemptor

The following rules specify the procedure for preempting a dedicated connection with respect to the Preemptor.

a) An Nx_Port shall initiate a preemption request using a Data (Device_Data or Link_Data) frame directed to the desired destination Nx_Port. The SOFx preemption request frame shall be formed as follows:
   A) an appropriate SOFx delimiter
   B) a Data (Device_Data or Link_Data) frame
   C) a S_ID of the Preemptor Nx_Port and a D_ID of the Preemption destination Nx_Port(s)
   D) the E_C bit (F_CTL bit 18) shall be set to zero
   E) the Priority (F_CTL bit 17) shall be set to one, and the Priority field (Word 1, bits 31 to 25) shall contain an appropriate priority value.
   F) the Unidirectional bit (F_CTL bit 8) shall be set to zero for a bi-directional Connection, and set to one for a unidirectional Connection
   G) the preemption flag bit (Word 1, bit 24) shall be set to one.
   H) an appropriate EOFx delimiter
b) The Data Field of the preemption request frame shall be limited to the smaller of
   A) the maximum buffer-to-buffer Receive_Data_Field size specified by the Fabric, or
   B) the maximum Receive_Data_Field size specified by the destination Nx_Port.
c) The preemptor Nx_Port shall follow all frame transfer or dedicated connection rules (as appropriate), including all buffer-to-buffer and end-to-end flow control and sequence and exchange rules as specified in this standard.
d) Preemption request response frames, including ACK, P_BSY, P_RJT, F_BSY, or F_RJT frames shall have an S_ID having a value representing the Preemption Destination and a D_ID having a value representing the preemptor Nx_Port.

#### 20.9.3.2 Preempted Source

The following rules specify the procedure for a Preempted Source. The Preempted Source is the Connection Initiator for a Class 1 or Class 6 connection.

A Connection Initiator Nx_Port's dedicated connection has been removed if a basic link service is received consisting of a PRMT command with:

a) an SOFn1 delimiter,
b) an S_ID of the Preemptor and a D_ID of the Preempted Source, and
c) an EOFdt delimiter

The Preempted source Nx_Port should notify its host that its dedicated connection has been preempted.

--`,,```,,,,````-`-`,,`,,`,`,,`---
Copyright International Organization for Standardization
Provided by IHS under license with ISO
No reproduction or networking permitted without license from IHS Not for Resale

#### 20.9.3.3 Preempted Destination(s)

The following rules specify the procedure for a Preempted Destination. The Preempted Destination is the Connection Recipient Nx_Port for a Class 1 or Class 6 connection.

A connection recipient Nx_Port's dedicated connection has been removed if a basic link service frame consisting of a PRMT command with:

a) an $SOF_{n1}$ delimiter,
b) an S_ID of the Preemptor and a D_ID of the Preempted Destination, and
c) an $EOF_{dt}$ delimiter

NOTE The Preempted destination Nx_Port should notify its FC-4 that its dedicated connection has been preempted.

#### 20.9.3.4 Preemption Destination(s)

The preemption destination shall follow all of the rules for frame transfer and connections as defined in this standard. Response frames, if required, shall contain an S_ID with the value representing the preemption destination Nx_Port and a D_ID with the value representing the preemptor Nx_Port.

## 20.10 Establishing a Connection Using Preemption

### 20.10.1 Introduction

A dedicated connection is established between a preemption requesting (Connection Initiator) Nx_Port and preemption destination(s) (Connection Recipient(s)) Nx_Port(s) following the successful completion of the Preemption process specified in 20.9.

NOTE Frame transfers may be completed following a connection preemption using a Class 2 or Class 3 preemption request frame. While the process for establishing a frame transfer using a preemption request is not explicitly defined in this standard, it follows the requirements for Class 2 or Class 3 and as defined in 20.9.

### 20.10.2 Connection Initiator

When the FC-2 protocol layer receives a request from an FC-4 or upper level to initiate a Class 1 or Class 6 sequence using preemption, the Nx_Port shall attempt to establish a Class 1 or Class 6 connection with the destination Nx_Port(s) using an $SOF_{c1}$ preemption request frame (preemption flag = 1) as part of a Sequence initiation.

The Nx_Port initiates a preemption request using the rules defined in 20.9.

Table 255 defines event 1 as the preemption request and events 2 through 8 as possible responses. Event 9 defines the response of the preempted source or destination.

Copyright International Organization for Standardization
Provided by IHS under license with ISO
No reproduction or networking permitted without license from IHS Not for Resale

**Table 255 - Responses to Preemption Requests**

| Event | SOF | D_ID | S_ID | Frame | EOF | Nx_Port Action |
|---|---|---|---|---|---|---|
| 1) | $SOF_{c1}$ | B | A | Data frame | $EOF_n$ | 1) Transmit Preemption Request<br>2) Wait for confirmation frame |
| 2) | $SOF_{n1}$ | A | B | F_RJT | $EOF_{dt}$ | Preemption Failed, Fabric Rejected request. |
| 3) | $SOF_{n1}$ | A | B | F_BSY | $EOF_{dt}$ | Preemption Failed, Fabric Busy. |
| 4) | $SOF_{n1}$ | A | B | P_BSY | $EOF_{dt}$ | Busy Nx_Port, Connection Removed. |
| 5) | $SOF_{n1}$ | A | B | P_RJT | $EOF_{dt}$ | Nx_Port Rejected, Connection Removed. |
| 6) | $SOF_{n1}$ | A | B | ACK_1/ ACK_0 | $EOF_n$/ $EOF_{dt}$ | 1) Dedicated connection Established<br>2) Continue Transmitting Sequence<br>3) Sequence/Connection Ended. |
| 7) | $SOF_{c1}$ | A | Any | Connect-request frame | $EOF_n$ | 1) Requeue Preemption Request Associated with Event 1.<br>2) Respond with $SOF_{n1}$ on ACK_1, ACK_0, or P_BSY. |
| 8) | | | | | | Time-out, no response frame. Perform Link Reset Protocol (see 7.6.3) |
| 9) | $SOF_{n1}$ | PS or PD | A | PRMT | $EOF_{dt}$ | Dedicated connection Preempted, Notify Host |

**Event 1:** A preemption Request is transmitted by Nx_Port (A) with an $SOF_{c1}$ delimiter with a destination address of Nx_Port (B) and the preemption flag = 1 (word 1, bit 31).

**Event 2:** An F_RJT indicates that the Fabric is unable to establish the dedicated connection or has rejected the request. A dedicated connection has not been established. The reason code specifies the cause.

**Event 3:** An F_BSY indicates that the Fabric is busy and was unable to service the preemption request. A Dedicated connection has not been established.

**Event 4:** A P_BSY indicates that the destination Nx_Port link facility is temporarily occupied with other activities and is unable to accept the preemption request. Try again later.

**Event 5:** A P_RJT indicates that the destination Nx_Port is unable to establish a dedicated connection. The reason code specifies the cause.

**Event 6:** An ACK_1 or ACK_0 indicates that the preemption request has been serviced and a Dedicated connection has been established. Nx_Port (A) is connected to Nx_Port (B).

a) Nx_Port (A) is the Connection Initiator and Nx_Port (B) is the Connection Recipient.
b) Nx_Port (A) may continue transmitting the Sequence initiated ($EOF_n$), or the Sequence that initiated the Connection may be complete ($EOF_t$).
c) Nx_Port (A) may initiate other Sequences with the same destination Nx_Port (B) up to the maximum number of Sequences defined by the Service Parameters obtained from (B) during Login.
d) The connected Nx_Port (B) may initiate Sequences using $SOF_{i1}$ to start each Sequence when the Connection is bi-directional. The number of active Sequences is limited by the Service parameters provided by Nx_Port (A) during Login.

**Event 7:** Nx_Port (A) shall requeue the $SOF_{c1}$ sent to the Fabric in Event 1 and may respond to the $SOF_{c1}$

Copyright International Organization for Standardization
Provided by IHS under license with ISO
No reproduction or networking permitted without license from IHS Not for Resale

received with an ACK_1 or ACK_0, or P_BSY. Once this connection is completed Nx_Port (A) may re-send the $SOF_{c1}$ preemption request frame to the Fabric.

**Event 8:** If a frame response is not received within the time-out period (E_D_TOV), a link time-out shall be detected and the Link Reset Protocol shall be performed (see 7.6.3)

See 20.4.1 for the rules that a source Nx_Port of a connect-request shall follow.

**Event 9:** When a connected source (i.e., Connection Initiator) or destination (i.e., Connection Recipient), receives a PRMT, the dedicated connection has been preempted and no longer exists. The Nx_Port should notify its host that the Sequence(s) were abnormally terminated due to the connection being preempted.

### 20.10.3 Preemption Destination

If an $SOF_{c1}$ preemption request frame is received by an Nx_Port previously connected (i.e., connected prior to being preempted), it shall transmit the appropriate ACK frame (ACK_1 or ACK_0) to the preemptor Nx_Port. After the ACK frame has been transmitted with the $SOF_{n1}$, a dedicated connection is established with the preemptor Nx_Port as the Connection Initiator and this destination Nx_Port(s) as Connection Recipient(s). After a Connection has been established, this destination Nx_Port may initiate Sequences with the preemptor Nx_Port using an $SOF_{i1}$ delimiter, if the Connection is bi-directional.

NOTE Class 6 dedicated connections are uni-directional.

When an unconnected Nx_Port receives a preemption request it shall respond normally for a Class 1 connection request, as specified in 20.5.5.

Copyright International Organization for Standardization
Provided by IHS under license with ISO
No reproduction or networking permitted without license from IHS Not for Resale

# 21 Error detection/recovery

## 21.1 Introduction

Link integrity and Sequence integrity are the two fundamental levels of error detection in this standard. Link integrity focuses on the inherent quality of the received transmission signal. When the integrity of the link is in question, a hierarchy of Primitive Sequences is used to reestablish link integrity. When Primitive Sequence Protocols are performed, additional data recovery on a Sequence basis may be required.

A Sequence within an Exchange provides the basis for ensuring the integrity of the data block transmitted and received. Exchange management ensures that Sequences are delivered in the manner specified by the Exchange Error Policy (see 21.6.3). Each frame within a Sequence is tracked on the basis of Exchange_ID, Sequence_ID, and a SEQ_CNT within the Sequence. Each frame is verified for validity during reception. Sequence retransmission may be used to recover from any frame errors within the Sequence and requires involvement, guidance, or authorization from an upper level.

Credit loss is an indirect result of frame loss or errors. Credit loss is discussed in regard to methods available to reclaim apparent lost Credit resulting from other errors. For Classes 1, 2, 3 and 6 see clause 20 for a more complete discussion on flow control, buffer-to-buffer Credit, and end-to-end Credit. For Class 4, see clause 25 for a more complete discussion on flow control, virtual circuit Credit, and EE_C4_Credit. See 25.4 for Class circuit error recovery.

## 21.2 Timeouts

### 21.2.1 Timeout periods

#### 21.2.1.1 General

The actual value used for a timeout shall not be less than the specified value and shall not exceed the specified value by more than 20%.

#### 21.2.1.2 R_T_TOV

The Receiver_Transmitter timeout value (R_T_TOV) is used by the receiver logic to detect Loss-of-Synchronization (see 6.1.5.2). The default value for R_T_TOV is 100 ms. A shorter value of 100 µs is allowed. FC_Ports that use the shorter value indicate this by setting the R_T_TOV bit in the Common Service Parameters during Login. An FC_Port may determine another FC_Port's R_T_TOV value using the Read Timeout Value (RTV) ELS (see 12.3.2.13).

#### 21.2.1.3 E_D_TOV

A short timeout value is known as the Error_Detect_Timeout Value (E_D_TOV). The E_D_TOV is used as the timeout value for detecting an error condition. The value of E_D_TOV represents a timeout value for detection of a response to a timed event (i.e., during Data frame transmission it represents a timeout value for a Data frame to be delivered, the destination Nx_Port to transmit a Link_Response, and the Link_Response to be delivered to the Sequence Initiator). The E_D_TOV value selected should consider configuration and Nx_Port processing parameters. The default value is 2 s. However, a valid E_D_TOV value shall also adhere to the proper relationship to the R_A_TOV value. When an Nx_Port performs Fabric Login, the Common Service Parameters provided by the Fx_Port specify the proper value for E_D_TOV.

When an Nx_Port performs N_Port Login in a point-to-point topology, the Common Service Parameters provided by each Nx_Port specify a value for E_D_TOV. If the two values differ, each Nx_Port shall use the longer time. An FC_Port may determine another FC_Port's value for E_D_TOV via the Read Timeout Value (RTV) ELS (see 12.3.2.13). Timeout values as specified in the Payload of the LS_ACC are counts of either 1 ms or 1 ns increments, depending on the resolution specified (e.g., a value of hex '00 00 00 0A' specifies a time period of either 10 ms or 10 ns).

Copyright International Organization for Standardization
Provided by IHS under license with ISO
No reproduction or networking permitted without license from IHS Not for Resale

There are three cases when E_D_TOV is used as an upper limit, that is, an action shall be performed in less than an E_D_TOV timeout period:

a) transmission of consecutive Data frames within a single Sequence,

NOTE 1 For Class 4, when very low guaranteed bandwidth is specified, the delivery time between Data frames within a Sequence may exceed E_D_TOV and a mechanism outside of this standard should be used for detecting a Sequence timeout.

b) retransmission of a Class 2 Data frame in response to an F_BSY or P_BSY, and
c) transmission of ACK frames from the point in time that the event that prompted the acknowledgment action.

NOTE 2 For Class 4, when very low guaranteed bandwidth is specified, the delivery time between ACK frames within a Sequence may exceed E_D_TOV and a mechanism outside of this standard should be used for detecting a Sequence timeout.

For all other cases, E_D_TOV shall expire before an action is taken. Two such examples include:

a) Link timeout (see 21.2.3), and
b) Sequence timeout (see 21.2.4).

#### 21.2.1.4 R_A_TOV

A long timeout value is known as the Resource_Allocation_Timeout Value (R_A_TOV). The R_A_TOV is used as the timeout value for determining when to Reinstate a Recovery_Qualifier. The value of R_A_TOV represents E_D_TOV plus twice the maximum time that a frame may be delayed within a Fabric and still be delivered. The default value of R_A_TOV is 10 s.

When an Nx_Port performs Fabric Login, the Common Service Parameters provided by the Fx_Port specify the value for R_A_TOV. When an Nx_Port performs N_Port Login in a point-to-point topology, the Common Service Parameters provided by each Nx_Port only specify a value for E_D_TOV. R_A_TOV shall be set to twice the E_D_TOV value in a point-to-point topology. An FC_Port may determine another FC_Port's value for R_A_TOV via the RTV ELS (see 12.3.2.13).

When R_A_TOV is used to determine when to reuse an Nx_Port resource (e.g., Recovery_Qualifier), the resource shall not be reused until R_A_TOV has expired for all frames previously transmitted that fall within the SEQ_CNT range of the Recovery_Qualifier. This may be accomplished by restarting the R_A_TOV timer as each Data frame of a Sequence is transmitted. Other techniques not specified by this standard may also be employed.

From the Fabric viewpoint, the maximum time that a frame may be delayed within the Fabric and still be delivered is in the range of 1 to $2^{31}$ -1 ms. The Fabric shall ensure delivery within the maximum delivery time by requiring each Fabric Element to timeout frames stored in receive buffers within the Element. Individual Elements may use different timeout values, possibly one for each class. The maximum Fabric delivery time is variable and is the cumulative timeout value for elements along the path or paths joining the source and destination Nx_Ports.

### 21.2.2 Link Failure timeouts

A Link Failure is detected under the following timeout conditions:

a) Loss-of-Signal (see 6.1.5.2),
b) Loss-of-Synchronization > timeout period (R_T_TOV) (see 6.1.5.2),
c) Link Reset Protocol timeout (> R_T_TOV) (see 7.6.3).

### 21.2.3 Link timeout

In Class 1 and Class 6, a Link timeout error is detected during a dedicated connection if Sequence timeouts have been detected for all active Sequences.

--`,,```,,,,````-`-`,,`,,`,`,,`---

Copyright International Organization for Standardization
Provided by IHS under license with ISO
No reproduction or networking permitted without license from IHS Not for Resale

In Class 1 ($SOF_{c1}$), Class 2, Class 3 or Class 6 ($SOF_{c1}$), a Link timeout error shall be detected if one or more R_RDY Primitive Signals are not received within E_D_TOV after the buffer-to-buffer Credit_CNT has reached zero.

In Class 4, a Link timeout error shall be detected if one or more VC_RDY Primitive Signals are not received within E_D_TOV after the VC Credit_CNT has reached zero. A Link Timeout determination for Class 4 shall add E_D_TOV to the normal expected arrival time of VC_RDYs from the QoSF for each Virtual Circuit.

Recovery from Link timeout is accomplished by performing the Link Reset Protocol (see 7.6.3).

Link timeout values need to take Fabric characteristics into consideration. In Class 1 and Class 6, the concern is the time required by the Fabric to process a connect-request. In Class 2 and 3, the concern is the maximum time required for frame delivery by the worst case route with any associated delays within the Fabric.

### 21.2.4 Sequence timeout

#### 21.2.4.1 Introduction

The basic mechanism for detecting errors within a Sequence is the Sequence timeout. Other mechanisms that detect frame errors within a Sequence are performance enhancements in order to detect an error sooner than the timeout period. Since an active Sequence utilizes Nx_Port resources, Sequence timeout is applicable to both discard and process error policies.

#### 21.2.4.2 Classes 1, 2 and 6

Both the Sequence Initiator and the Sequence Recipient use a timer facility with a timeout period (E_D_TOV) between expected events. The expected event for the Responder to Data frame transmission is an ACK response. The expected event for the Initiator is another Data frame for the same Sequence that is active and incomplete. Other events (e.g., Link Credit Reset and Abort Exchange) shall also stop the Sequence timer. When a Sequence Recipient receives the last Data frame transmitted for the Sequence, it shall verify that all frames have been received before transmitting the final ACK ($EOF_t$ or $EOF_{dt}$) for the Sequence.

If the timeout period (E_D_TOV) expires for an expected event before the Sequence is complete, a Sequence timeout is detected. Timeouts are detectable by both the Sequence Initiator and the Sequence Recipient. If a Sequence Initiator detects a Sequence timeout, it shall transmit the ABTS frame to perform the Abort Sequence Protocol. If a timeout is detected by the Sequence Initiator before the last Data frame is transmitted, ABTS notifies the Sequence Recipient that an error was detected by the Sequence Initiator (see 21.7.2.2). Detection of a Sequence timeout by the Sequence Initiator may also result in aborting the Exchange (see 12.2.2 and 12.3.2.2).

If a Sequence Recipient detects a Sequence timeout, it shall set the Abort Sequence Condition (F_CTL bits 5 to 4) in an ACK to an ’01’ b, or ’11’ b value to indicate a missing frame error condition. The Sequence Recipient shall also post the detected condition in the Exchange Status Block associated with the Sequence. A Sequence timeout results in either aborting the Sequence (see 12.2.2) by the Sequence Initiator, abnormal termination of a Sequence (see 21.7.2) by the Sequence Recipient, or aborting the Exchange by either the Sequence Initiator or Sequence Recipient (see 12.3.2.2).

In Class 2, if a Sequence has been aborted and the Sequence Recipient supplies the Recovery_Qualifier (OX_ID, RX_ID, and a SEQ_CNT range, low and high SEQ_CNT values), the Sequence Initiator shall not transmit any Data frames within that range within a timeout period of R_A_TOV. Both the Sequence Initiator and Sequence Recipient discard frames within that range. After R_A_TOV has expired, the Sequence Initiator shall reinstate the Recovery_Qualifier using a Reinstate Recovery Qualifier Link Service request.

#### 21.2.4.3 Class 3

In Class 3, the expected event for the Recipient is another Data frame for the same Sequence. Other events (e.g., Abort Exchange) shall also stop the Sequence timer. When a Sequence Recipient receives the last Data frame transmitted for the Sequence, it shall verify that all frames have been received.

Copyright International Organization for Standardization
Provided by IHS under license with ISO
No reproduction or networking permitted without license from IHS Not for Resale

NOTE 1 For environments that do not use a request/response protocol, the Sequence Initiator may periodically transmits an ABTS frame and the Sequence Recipient is able to inform the Sequence Initiator of the last deliverable Sequence. If the Sequence Initiator does not transmit ABTS frames, in Discard multiple Sequences Exchange Error Policy following an error in a Single Sequence, the Sequence Recipient may continue to abnormally terminate subsequent Sequences and not deliver them to the FC-4 or upper level due to the requirement of in-order delivery of Sequences in the order transmitted.

NOTE 2 For environments that use a request/response protocol, ABTS should not be used to forward progress of a transmission. For bi-directional Exchanges, it is possible to infer proper Sequence delivery without the use of ABTS, if Sequence Initiative has been transferred and the reply Sequence for the same Exchange is received.

#### 21.2.4.4 End-to-end Class 2 Credit loss

In Class 2 it is possible to reduce end-to-end Credit to zero as a result of one or more Sequence timeouts. The LCR Link_Control frame shall be transmitted by the Sequence Initiator, that has no end-to-end Credit, to the Sequence Recipient. The Sequence Initiator (indicated by the S_ID in the LCR frame) shall perform normal recovery for the Sequence that timed out (see 21.7).

The Fabric may return F_BSY if unable to deliver the LCR frame. A Reject may also be returned if either the S_ID or D_ID is invalid or an invalid delimiter is used.

When an Nx_Port receives a LCR, it shall discard the Data in its buffers associated with the S_ID of the LCR frame and abnormally terminate the Sequences associated with any discarded frames.

### 21.2.5 OLS transmit timeout

When a Port is performing the Online-to-Offline Protocol (see 7.6.5), the Port shall timeout the transmission of OLS (5 ms) before reception of a Primitive Sequence in response.

NOTE The timeout value of 5 ms allows a Port to enter the Offline State in the absence of an appropriate response from the attached Port. The intent is to ignore received data while transmitting OLS for 5 ms

### 21.2.6 Timer Enhancements for Classes 1 and 6

#### 21.2.6.1 Introduction

This standard defined two timers, E_D_TOV and R_A_TOV, that are used for normal frame flow. E_D_TOV is used by both the Sequence Recipient (SR) and the Sequence Initiator (SI) to time FC-2 inter-frame arrival of data and ACK frames respectively to determine if an error has occurred. R_A_TOV is used as the maximum transit time within a Fabric to guarantee that a lost frame shall never emerge from the Fabric after an R_A_TOV time-out.

These timers should be kept small to minimize the interval required to recognize time-out errors. Under certain conditions these time-out values may be much larger to allow frames to remain outstanding for an extended time without reporting an error. Specifically, connect-request frames under Stacked Connect-request are required to remain active within the Fabric for an extended period of time to accomplish their intended functions. The time-out value requirements for these connect-request frames and all other frames are considerably different.

This subclause defines the Connection Request time-out Value (CR_TOV) (see figure 35) that is used by the Connection Initiator, the Connection Recipient, and the Fabric to control the connect-request process when Stacked Connect-request is invoked.

Copyright International Organization for Standardization
Provided by IHS under license with ISO
No reproduction or networking permitted without license from IHS Not for Resale

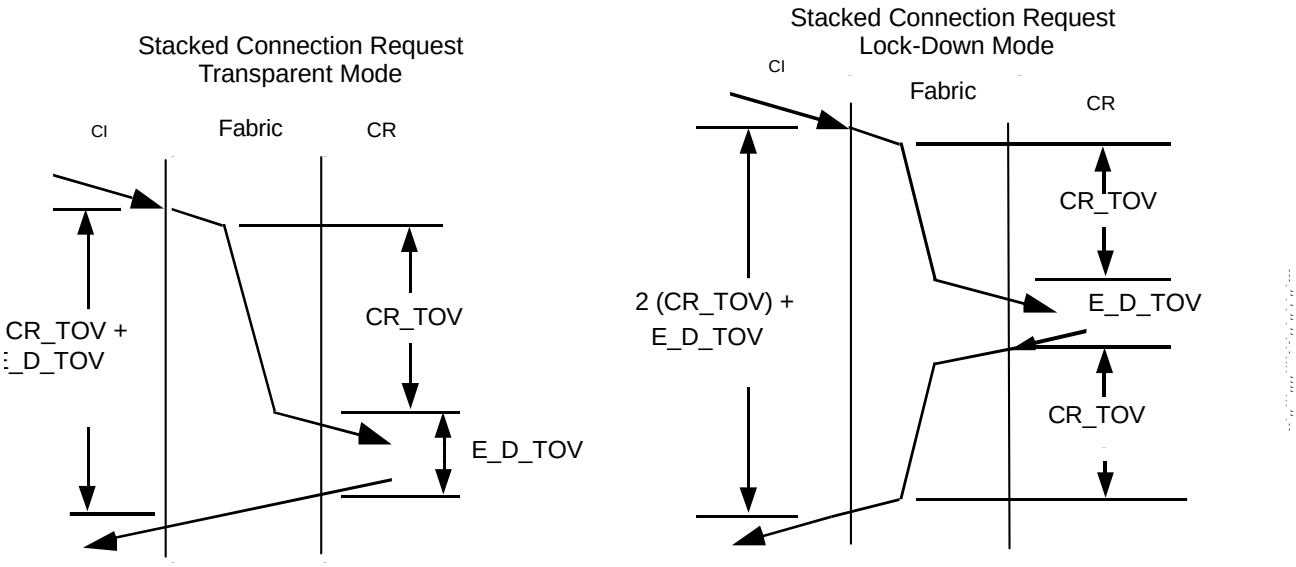


**Figure 35 - Frame Flow Timers**

#### 21.2.6.2 Applicability

The Connection Initiator, Connection Recipient, and the Fabric shall use the CR_TOV timer to time connect-request frames that are transmitted as Stacked Connect-request.

#### 21.2.6.3 Login

CR_TOV is specified by the Fx_Port during Fabric Login as part of the Class Service Parameters (see 15.6.5.11).

#### 21.2.6.4 Value

The minimum CR_TOV value shall be R_A_TOV. The Fabric sets the maximum value of CR_TOV.

#### 21.2.6.5 Stacked Connect-request

The CR_TOV timer shall be used by the Fabric to define the maximum time period that the Fabric shall hold a Stacked Connect-request frame.

#### 21.2.6.6 Rules

##### 21.2.6.6.1 Connection Initiator

The following are the rules for the Connection Initiator:

a) Following the transmission of a connect-request frame invoking Stacked Connect-request, if the Connection Initiator receives an F_BSY in reply to that connect-request, the Connection Initiator shall retry that connect-request.
b) The Connection Initiator shall wait a minimum time period of CR_TOV + E_D_TOV in Stacked Connect-request Transparent Mode following the transmission of a connect-request frame invoking Stacked Connect-request before it declares the connect-request frame to be lost and initiate error recovery.
c) The Connection Initiator shall wait a minimum time period of 2 (CR_TOV) + E_D_TOV in Stacked Connect-request Lock_Down Mode following the transmission of a connect-request frame invoking Stacked Connect-request before it declares the connect-request frame to be lost and initiate error recovery.

Copyright International Organization for Standardization
Provided by IHS under license with ISO
No reproduction or networking permitted without license from IHS Not for Resale

#### 21.2.6.6.2 Connection Recipient

The following are the rules for the Connection Recipient:

a) The Connection Recipient shall wait a minimum time period of E_D_TOV following receipt of a connect-request frame that invoked Stacked Connect-request Transparent mode, before considering the ACK to the Connection Recipient to have been lost.
b) The Connection Recipient shall wait a minimum time period of CR_TOV + E_D_TOV following receipt of a connect-request frame that invoked Stacked Connect-request Lock Down mode, before considering the ACK to the Connection Recipient to have been lost.

#### 21.2.6.6.3 Fabric

The following are the rules for the Fabric:

a) The Fabric shall start the CR_TOV timer on receipt of a connect-request frame, that has invoked Stacked Connect-request.
b) If the CR_TOV timer expires on a connect-request frame that has invoked Stacked Connect-request before the Fabric forwards it to the Connection Recipient, the Fabric shall discard the connect-request frame and Fabric transmit an F_BSY frame to the Connection Initiator.

### 21.2.7 Bit-Error-Rate Thresholding

#### 21.2.7.1 Introduction

The bit-error-rate thresholding process is designed to detect an increased error rate before performance degradation becomes serious. When the specified bit-error-rate threshold is reached, a Registered Link Incident Report (RLIR) ELS shall be generated as required by the RLIR ELS (see 12.3.2.31).

The bit-error rate is measured during frame, Primitive Signal, and Primitive Sequence reception. The bit-error rate is not calculated during times when Transmission Word synchronization has been lost, when in the Offline State, or when in a Link-Failure State.

#### 21.2.7.2 Types of Link Errors Caused by Bit Errors

Bit errors are not detected directly, however they usually result in the recognition of invalid Transmission Words, Primitive Sequence protocol errors, CRC errors, or other events. Only recognition of invalid Transmission Words are counted toward the bit-error-rate threshold.

#### 21.2.7.3 Error Bursts

A single error may result in several related errors occurring closely together that in turn may result in multiple counts. A character might have a single bit error in it that causes a code-violation error. A disparity error might occur on a following character, caused by the same single error. To prevent multiple error counts from a single cause, the following concept of an error burst is introduced:

a) An error burst is a time period 1,5 +/- 0,5 s long during which one or more invalid Transmission Words are recognized. This time may be exceeded due to infrequent unusual conditions.
b) Only one error in an error burst is counted toward the bit-error threshold.

#### 21.2.7.4 Bit-Error-Rate-Thresholding Measurement

Measurement of bit-error-rate thresholding shall be accomplished by counting the number of error bursts that occur in a 5-minute period. When the count equals a specific number, the threshold is exceeded. This specific number is called the “threshold error count.”

A bit-error-rate threshold shall be detected when 15 error bursts occur in a 5-minute period.

Copyright International Organization for Standardization
Provided by IHS under license with ISO
No reproduction or networking permitted without license from IHS Not for Resale

The required accuracy of the 5-minute period mentioned above is +/- 0,3 s.

The bit-error-counting process shall be restarted when Active State is entered and when a vendor-dependent amount of time has elapsed after a bit-error-rate threshold is detected. After a bit-error-rate threshold is detected, at least 15 additional error bursts shall occur before the next bit-error-rate threshold is detected. In addition, the bit-error-counting process may be restarted whenever the 5-minute time period has expired even though a bit-error-rate threshold is not reached. The bit-error-counting process may also be reset and restarted when an initialization procedure occurs.

NOTE The delay in restarting bit-error counting after a threshold is detected is to prevent threshold-exceeded conditions from being reported at an excessive frequency.

## 21.3 Link error detection

### 21.3.1 Link Failure

The first level of link error detection is at the receiver. Link Failure is detected under the following conditions:

a) Link Failure conditions (see 21.2.2), or
b) Reception of the NOS Primitive Sequence (see 5.5.4.2).

Recovery from Link Failure is accomplished by performing the Link Failure Protocol (see 7.6.4).

### 21.3.2 Code violations

Code violations are link errors that result from an invalid transmission code point or disparity error. If a code violation occurs during Primitive Signals, it is recorded in the Link Error Status Block by incrementing the Invalid Transmission Word count by one. If a code violation occurs during frame reception (see 8.9), the Link Error Status Block shall also be updated by incrementing the Invalid Transmission Word count by one and the frame identified as invalid. The Data Field of the invalid frame may be discarded or processed based on the Exchange Error Policy.

NOTE When a code violation is detected, the actual location of the error may precede the location at which the code violation is detected (see table 8). In particular, even if the code violation is detected following the Frame_Header, fields in the header may not be valid.

### 21.3.3 Primitive Sequence protocol error

If an Nx_Port is in the Active State and it receives LRR, it shall detect a Primitive Sequence protocol error that is counted in the LESB.

## 21.4 Link error recovery

The Link recovery hierarchy is shown in figure 36.

The recovery protocols are nested and organized from the most serious to least serious link action.

a) Link Failure Protocol (see 7.6.4)
b) Link Initialization Protocol (see 7.6.2)
c) Link Reset Protocol (see 7.6.3)

## 21.5 Link recovery - secondary effects

### 21.5.1 Class 1 and Class 6

During a Class 1 and 6 dedicated connection, transmission or reception of Primitive Sequences removes the connection. While an Nx_Port is transmitting a Primitive Sequence, it shall discard any subsequent Class 1 and

Copyright International Organization for Standardization
Provided by IHS under license with ISO
No reproduction or networking permitted without license from IHS Not for Resale

Class 6 frames received. For Class 1 intermix, see the discussion regarding Class 2 (see 21.5.2) and Class 3 (see 21.5.3). After receiving the first Primitive Sequence of any Primitive Sequence Protocol, the end-to-end Credit and buffer-to-buffer Credit shall be reset to their original Login values in both the Nx_Port and Fx_Port involved.

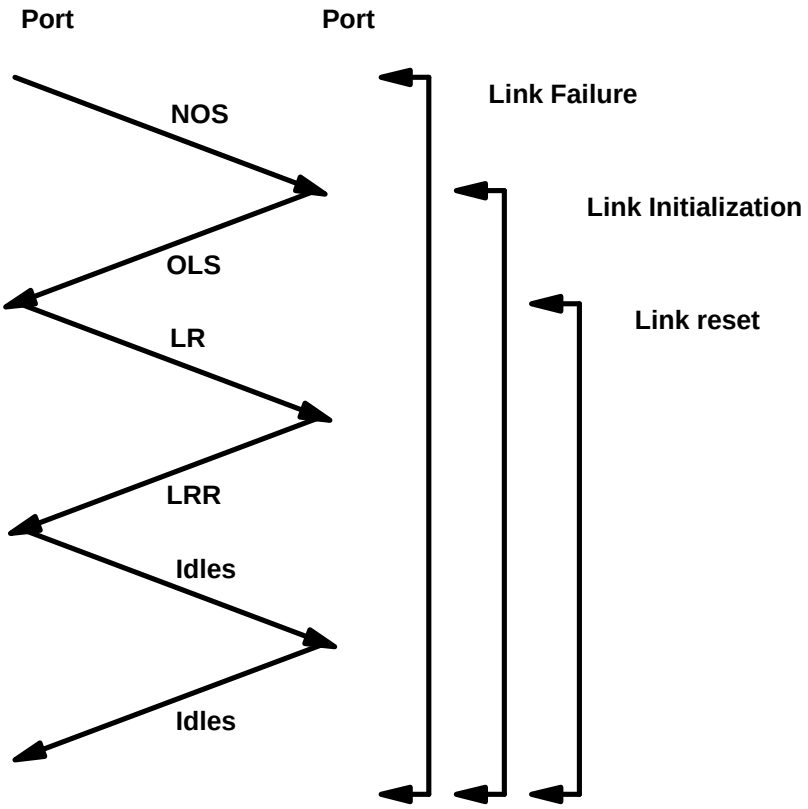


**Figure 36 - Link recovery hierarchy**

After leaving the Active State to perform a Primitive Sequence Protocol, all frame Sequences that are open are terminated abnormally. Recovery on a Sequence by Sequence basis is required of the Sequence Initiator at the discretion of the FC-4 or upper level. The Exchange is not aborted or abnormally terminated, unless either the Originator or Responder explicitly performs ABTX or LOGO. When Sequences are abnormally terminated, the current status of each Sequence is posted in the corresponding Exchange Status Block and the Sequence Status Blocks are reset and released. Link resources associated with the active Sequences are released. If the Sequence Initiative is in doubt, the previous Initiator Nx_Port shall interrogate the other Nx_Port's Exchange Status Block to determine which Nx_Port has the Sequence Initiative (see 21.7.2).

### 21.5.2 Class 2

When Primitive Sequences are transmitted or received, the Fx_Port may discard any Class 2 frames held in its buffers. While an Nx_Port is transmitting a Primitive Sequence, it may discard any subsequent Class 2 frames received. After receiving the first Primitive Sequence of any Primitive Sequence Protocol, the buffer-to-buffer Credit shall be reset in the Nx_Port and the Fx_Port to the Login values. Both the Nx_Port and Fx_Port may begin transmitting frames after entering the Active State.

Active Sequences within an Exchange are not necessarily affected. Therefore, normal processing continues and Sequence recovery is performed as required.

Copyright International Organization for Standardization
Provided by IHS under license with ISO
No reproduction or networking permitted without license from IHS Not for Resale

### 21.5.3 Class 3

When Primitive Sequences are transmitted or received, the Fx_Port may discard any Class 3 frames held in its buffers. While an Nx_Port is transmitting a Primitive Sequence, it may discard any subsequent Class 3 frame received. After receiving the first Primitive Sequence of any Primitive Sequence Protocol, the buffer-to-buffer Credit shall be reset in the Nx_Port and the Fx_Port. Both the Nx_Port and Fx_Port may begin transmitting frames after entering the Active State.

Active Sequences within an Exchange are not necessarily affected. Therefore, normal processing continues and Sequence recovery is performed as required.

### 21.5.4 Class 4

The actions to be taken for Class 4 are specified in clause 7.

## 21.6 Exchange Integrity

### 21.6.1 Applicability

Since Class 3 does not use ACK or Link_Response frames, Sequence integrity is verified at the Sequence Recipient on a Sequence by Sequence basis. In Class 3, only the Recipient is aware of a missing frame condition and communication of that information to the Initiator is the responsibility of the FC-4 or upper level.

The remaining discussion concentrates on Classes 1, 2, 4 and 6. Items applicable to Class 3 shall be specified explicitly.

### 21.6.2 Exchange management

An Exchange is managed according to the rules specified in 17.3.1. When an Exchange is originated, the Originator specifies the Exchange Error Policy for the duration of the Exchange. Delivery of Data within a Sequence from the Originator to the Responder or from the Responder to the Originator shall be in the same order as transmitted. The discarding of Sequences, the delivery order of Sequences, and the recovery of Sequences varies based on the Exchange Error Policy identified by the Originator Abort Sequence Condition bits (F_CTL bits 5 to 4). (see 9.7.14)

### 21.6.3 Exchange Error Policies

#### 21.6.3.1 Introduction

There are two fundamental Exchange Error Policies - discard and process. Discard policy means that a Sequence is delivered in its entirety or it is not delivered at all. There are three variations of discard policy that relate to the deliverability of ordered Sequences and one method of retransmission at the FC-2 level. Process policy allows an incomplete Sequence to be deliverable. Process policy allows the Data portion of invalid frames to be delivered if the Sequence Recipient has reason to believe that it is part of the proper Exchange. See 17.3.10 for rules that discuss detailed requirements for each type of Discard and Process policy.

#### 21.6.3.2 Discard multiple Sequences

The Discard multiple Sequences Error Policy requires that for a Sequence to be deliverable, it shall be complete (all Data frames received and accounted for) and any previous Sequences, if any, for the same Exchange from the Sequence Initiator are also deliverable. This policy is useful if the ordering of Sequence delivery (Sequence A followed by Sequence D, followed by Sequence T, and so forth) is important to the FC-4 or upper level. Sequences shall be delivered to the FC-4 or upper level on a Sequence basis in the same order as transmitted.

Copyright International Organization for Standardization
Provided by IHS under license with ISO
No reproduction or networking permitted without license from IHS Not for Resale

#### 21.6.3.3 Discard a single Sequence

The Discard a single Sequence Error Policy requires that for a Sequence to be deliverable, it shall be complete (all Data frames received and accounted for). There shall be no requirement on the deliverability of previous Sequences for the Exchange. This policy is useful if the Payload of the Sequences delivered contains sufficient FC-4 or upper level information to process the Sequence independently of other Sequences within the Exchange. Sequences shall be delivered to the FC-4 or upper level on a Sequence basis in the same order as received.

#### 21.6.3.4 Process with infinite buffering

The Process with infinite buffering Error Policy does not require that a Sequence be complete or that any previous Sequences be deliverable. Process policy allows an Nx_Port to utilize the Data Field of invalid frames under certain restrictive conditions (see 8.9.2 and 8.9.3). The Process with infinite buffering Error Policy is intended for applications (e.g., a video frame buffer) in which loss of a single frame has minimal effect or no effect on the Sequence being delivered. Frames shall be delivered to the FC-4 or upper level in the same order as received.

The above shall also apply to Process with infinite buffering in Class 3.

#### 21.6.3.5 Discard multiple Sequences with retransmission

The Discard multiple Sequences with immediate retransmission is a special case of the Discard multiple Sequences Error Policy. This policy is only applicable to an Exchange where all transmission is in Class 1 and 6. It provides a method by which the Sequence Recipient may request immediate Sequence retransmission at the FC-2 level under the guidance or authorization of the FC-4 or upper level (see 21.7.2.3). Sequences shall be delivered to the FC-4 or upper level on a Sequence basis in the same order as transmitted.

### 21.6.4 Sequence integrity

Sequence management and integrity involves

a) proper initiation of Sequences (see 17.3.4),
b) proper control of the ordering of Sequences (SEQ_ID usage) with continuously increasing SEQ_CNT (see 17.3.6),
c) proper control of Data frames by SEQ_CNT within single Sequence (see 17.3.6), and
d) proper completion of a Sequence (see 17.3.8).

Frame identification (see 9.2.1) and Sequence identification (see 9.2.2) provide the appropriate uniqueness to ensure the integrity of the Data delivered. A Sequence Recipient shall not reassemble and deliver the Data frames of a single Sequence unless all of the Data frames adhere to the Sequence management rules specified in 17.3.5.

### 21.6.5 Sequence error detection

Sequence errors are detected in three ways

a) detection of a missing frame (see 17.3.10 and 17.3.11),
b) detection of a Sequence timeout (see 21.2.4), and
c) detection of rejectable condition within a frame (see 11.2.3.4).

Detection of Sequence errors by the Recipient is conveyed in the Abort Sequence Condition bits (F_CTL 5 to 4) in an ACK frame or by a P_RJT frame (except Class 3). Otherwise, either the Sequence Initiator or Sequence Recipient or both detect a Sequence timeout.

Exchange and Sequence status are tracked in the Exchange Status Block (see 17.8.1 and 17.3.14) and the Sequence Status Block (see 17.8.2 and 17.3.12), respectively.

Copyright International Organization for Standardization
Provided by IHS under license with ISO
No reproduction or networking permitted without license from IHS Not for Resale

#### 21.6.6 X_ID processing

During certain periods in an Exchange, one or both X_ID fields may be unassigned. If an X_ID is unassigned, special error recovery for both the Sequence Initiator and the Sequence Recipient may be required that is beyond the scope of this standard.

## 21.7 Sequence recovery

#### 21.7.1 Introduction

Sequence recovery is under control of the individual FC-4 or upper level as well as options within a specific implementation. Such control may be exercised in the form of guidance, authorization to automatically perform recovery, a requirement to inform the upper level prior to recovery, or no Sequence recovery within the Exchange encountering a Sequence error. This standard specifies procedures to terminate or abort a Sequence, recover end-to-end Credit, handle missing or delayed frames, and synchronize both Nx_Ports with respect to Sequence and Exchange status. This standard does not require Sequence retransmission within the same Exchange in which a Sequence error is detected.

#### 21.7.2 Abnormal Sequence termination

##### 21.7.2.1 Introduction

There are multiple methods by which a Sequence may complete abnormally and one method by which a Sequence completes but is only partially received by the Sequence Recipient. When a Sequence completes abnormally, it shall not be delivered to the FC-4 or upper level. The rules for normal Sequence completion are specified in 17.3.8. The methods by which a Sequence completes abnormally include:

a) the Sequence Initiator aborts the Sequence with an ABTS frame utilizing the Abort Sequence Protocol. At the time the ABTS frame is received, one or more Sequences are incomplete.
b) a Class 1 or 6 dedicated connection and Class 6 Multicast Connection is broken by transmission or reception of a Primitive Sequence while the Sequence is open.
c) a Class 4 Virtual Circuit is broken by transmission or reception of a Primitive Sequence as specified in 7.6 when the Sequence is open.
d) if the Exchange of which a Sequence is a member is abnormally terminated, each open Sequence shall also be abnormally completed (see 17.3.13)).
e) Logout (see 12.3.2.8).

A Sequence may complete normally with only a part of the Sequence being received by the Sequence Recipient in the Stop Sequence Protocol.

##### 21.7.2.2 Abort Sequence Protocol

###### 21.7.2.2.1 General Case

The Sequence Initiator shall begin the Abort Sequence Protocol (ABTS Protocol) by transmitting the ABTS Basic Link Services frame. The SEQ_ID shall match the SEQ_ID of the last Sequence transmitted even if the last Data frame has been transmitted. The ABTS frame may be transmitted without regard to whether transfer of Sequence Initiative has already been attempted or completed. The SEQ_CNT of the ABTS frame shall be one greater than the SEQ_CNT of the last frame transmitted for this Exchange by the Sequence Initiator of the ABTS frame.

The Sequence Recipient shall accept an ABTS frame even if the Sequence Initiative has been previously transferred. The Recipient determines the last deliverable Sequence as the Recipient for this Exchange and it includes that SEQ_ID in the BA_ACC Payload along with a valid indication (see 12.2.3). The Payload of the BA_ACC also includes the current OX_ID and RX_ID for the Exchange in progress. Low and high SEQ_CNT values are also returned. The low SEQ_CNT value is equal to the SEQ_CNT of the last Data frame (End_Sequence = 1) of the last deliverable Sequence. If there was no deliverable Sequence, the low value is zero.

Copyright International Organization for Standardization
Provided by IHS under license with ISO
No reproduction or networking permitted without license from IHS Not for Resale

The high SEQ_CNT value shall match the SEQ_CNT of the ABTS frame. The combination of OX_ID, RX_ID, low SEQ_CNT and high SEQ_CNT defines a Recovery_Qualifier range. This range indicates a range of Data frames that were not and shall never be delivered to the FC-4 or upper level in the Discard multiple Sequences Error Policy. In the Discard a single Sequence Error Policy, the Recovery_Qualifier may contain Sequences that have been delivered.

If the ABTS frame is transmitted in Class 2, 3 or 4, the Recovery_Qualifier shall be timed out by the Sequence Initiator of the ABTS frame for a timeout period of R_A_TOV. After the R_A_TOV timeout has expired, the Sequence Initiator of the ABTS frame shall issue a Reinstate Recovery Qualifier Link Service request in order to purge the Recovery_Qualifier. Timing out the Recovery_Qualifier range for R_A_TOV allows both Nx_Ports to discard frames received in this range. This ensures the Data integrity of the Exchange.

NOTE Since streaming Sequences across multiple classes of service for the same Exchange is not allowed, and since ABTS shall be transmitted as part of the last Sequence transmitted, the Abort Sequence Protocol is performed in the same class in which the error, if any, occurred. Therefore, there is no ambiguity between the Sequence Initiator and the Sequence Recipient as to whether a Recovery_Qualifier is needed. If ABTS is transmitted in Class 1or 6, then none is needed. If ABTS is transmitted in Class 2, 3 or 4, then a Recovery_Qualifier is established (e.g., if a Sequence Initiator has transmitted a Sequence in Class 1 or 6, but Link Recovery is performed before all acknowledgements are received, then the Sequence Initiator is required to reestablish a Class 1 Connection in order to transmit ABTS).

Transmission of BA_ACC by the Sequence Recipient is a synchronizing, atomic event. The Sequence Recipient shall discard any frames received within the Recovery_Qualifier range, if timeout is required, the instant that the BA_ACC is transmitted and thereafter, until it receives a Reinstate Recovery Qualifier (RRQ) ELSs request. The Sequence Initiative F_CTL bit setting in the BA_ACC shall indicate whether the Sequence Initiative is held or transferred to the Sequence Initiator of the ABTS frame. If the Sequence Recipient of the ABTS frame holds Sequence Initiative, it shall withhold Sequence Initiative transfer until the ACK to the BA_ACC is received.

In like manner, after the Sequence Initiator has received the BA_ACC to the ABTS frame, it shall discard any frames received for the Recovery_Qualifier range. In Class 2, 3 or 4, the Sequence Initiator shall retire the SEQ_CNT range within the Recovery Qualifier until R_A_TOV has expired, or it shall abort the Exchange (the Recovery_Qualifier for the Exchange times out R_A_TOV).

When the Sequence Initiator has received the BA_ACC, it may reclaim any outstanding end-to-end Credit for all unacknowledged Data frames within the SEQ_CNT range of the Recovery_Qualifier. After the Sequence Initiator of the ABTS frame has received the BA_ACC with Sequence Initiative transferred to the Initiator, it may retransmit the Sequences that it determines as non-deliverable by the Sequence Recipient (see 17.3.8 and 17.3.11).

If a Recovery_Qualifier exists and is being timed out (R_A_TOV) and another Sequence error occurs that would cause transmission of the ABTS frame, the Exchange shall be aborted using the ABTX request. However, if the Reinstate Recovery Qualifier request has been completed such that the Recovery_Qualifier has been purged, the ABTS Protocol may be utilized and a new Recovery_Qualifier may be established.

#### 21.7.2.2.2 Special case - new Exchange

If a Sequence Initiator of the ABTS frame attempts to originate a new Exchange and a Sequence timeout occurs, the Sequence Initiator shall transmit the ABTS frame as in the ABTS protocol defined. If the Sequence Recipient receives an ABTS frame for an Exchange that is unknown, it shall open an Exchange Status Block, with OX_ID = value of ABTS, RX_ID = hex 'FF FF', and post the SEQ_ID of the ABTS frame. The BA_ACC Payload shall indicate invalid SEQ_ID, a low SEQ_CNT set to zero, and a high SEQ_CNT set to SEQ_CNT of the ABTS frame.

The Sequence Initiator of the ABTS frame shall timeout the Recovery_Qualifier, if required, and transmit the Reinstate Recovery Qualifier in the normal manner.

#### 21.7.2.3 Class 1 or 6 Sequence retransmission

In an asynchronous environment, Sequence retransmission is made difficult due to a possible difference in error information available in the Sequence Recipient compared to the Sequence Initiator. Therefore the following

Copyright International Organization for Standardization
Provided by IHS under license with ISO
No reproduction or networking permitted without license from IHS Not for Resale

restrictions shall be placed on the use of Class 1 Sequence retransmission:

a) Class 1 and Class 6 only (in-order delivery, with no frames delayed in the Fabric).
b) the Sequence Initiator shall request Discard multiple Sequences with immediate retransmission as the Error Policy on the first Data frame of the Exchange.
c) the Sequence Recipient shall not be required to support Sequence retransmission and may reply with Abort Sequence Condition bits set to ’01’ b if a missing frame error is detected.
   A) if the Sequence Recipient does not support the Discard multiple Sequences with immediate retransmission Error Policy, it shall set the Abort Sequence Condition bits (F_CTL 5 to 4) to ’01’ b to indicate a missing frame error.
   B) if the Sequence Recipient does not support the Discard multiple Sequences with immediate retransmission Error Policy, it shall transmit an ACK with the Abort Sequence Condition bits (F_CTL bits 5 to 4) set to ’01’ b if a Data frame is received with the retransmit bit (F_CTL bit 9) set to one.
d) if Discard multiple Sequences with immediate retransmission is supported by the Sequence Recipient, the Sequence Recipient shall set the Abort Sequence Condition bits (F_CTL bits 5 to 4) to ’11’ b to indicate a missing Data frame error when:
   A) the Sequence Recipient determines that a missing frame error has occurred in a Sequence such that an ACK may be transmitted for the same SEQ_ID of the first non-deliverable Sequence with the retransmit bit in F_CTL set to zero.
   B) the Sequence Recipient shall continue to transmit ACKs for the same SEQ_ID with the Abort Sequence Condition bits set to ’11’ b.
   C) for any subsequent streamed Sequences, the Sequence Recipient shall set the Abort Sequence Condition bits to ’01’ b and the Sequences shall be non-deliverable. The Sequence Recipient shall discard those subsequent Sequences with no Sequence Status Blocks opened, and no information saved.
   D) the Sequence Recipient shall save the SEQ_ID and starting SEQ_CNT for that SEQ_ID for comparison to a retransmitted Sequence (i.e., the SEQ_CNT of the $SOF_{i1}$. frame).
e) if the Sequence Recipient detects a missing Data frame error, but is unable to determine what the SEQ_ID of the first non-deliverable Sequence should be, or it is unable to determine the starting SEQ_CNT, it shall set the Abort Sequence Condition bits (F_CTL bits 5 to 4) to ’01’ b in the corresponding ACK frame.
f) when the Sequence Initiator receives an ACK with Abort Sequence Condition bits (F_CTL bits 5 to 4) set to ’11’ b, it shall make a determination as to whether the SEQ_ID of the ACK frame identifies the first non-deliverable Sequence based on its ACK frame history of prior Sequences. If the Sequence Initiator is unable to make such a determination, it shall either Abort the Sequence with ABTS, Read Exchange Status, or Read Sequence Status to determine what Sequence was in error.
g) if the Sequence Initiator is able to determine that the first non-deliverable Sequence in error matches the SEQ_ID of the ACK frame with the Abort Sequence Condition bits set to ’11’ b, it shall begin Sequence retransmission with the following restrictions:
   A) F_CTL bit 9 (retransmission bit) shall be set to one on each Data frame of the Sequence being retransmitted as well as any subsequent streamed Sequences until the first retransmitted Sequence is determined by the Sequence Initiator to be deliverable.
   B) the SEQ_ID shall match the SEQ_ID of an ACK frame with the Abort Sequence Condition bits set to ’11’ b,
   C) the SEQ_ID being retransmitted is the first non-deliverable Sequence as determined by the Sequence Initiator,
   D) the SEQ_CNT shall match the SEQ_CNT of the first Data frame ($SOF_{i1}$) of the original non-deliverable Sequence transmitted as determined by the Sequence Initiator.
   E) the Sequence Recipient shall check for an ABTS frame and perform the normal Abort Sequence Protocol if received, independently of the retransmit bit (F_CTL bit 9) setting.
   F) the Sequence Recipient shall also check for an $SOF_{i1}$, with F_CTL bit 9 = 1, SEQ_ID = first non-deliverable Sequence, and SEQ_CNT set to first SEQ_CNT of the non-deliverable Sequence.
   G) the Sequence Recipient shall set the retransmit bit (F_CTL bit 9) = 1 in the ACK frame corresponding to a Data frame in which F_CTL bit 9 = 1.
   H) if the Sequence Recipient detects an error in the restart point of the Sequence retransmission (either incorrect SEQ_ID, or incorrect SEQ_CNT of $SOF_{i1}$), it shall transmit an ACK with the retransmission bit (F_CTL bit 9) set to one, the Abort Sequence Condition bits set to ’01’ b, requesting ABTS, and the Sequence being retransmitted shall be non-deliverable.

--`,,```,,,,````-`-`,,`,,`,`,,`---
Copyright International Organization for Standardization
Provided by IHS under license with ISO
No reproduction or networking permitted without license from IHS Not for Resale

l) after the Sequence Initiator determines that the retransmitted Sequence is successfully delivered (ACK EOFt), it shall transmit subsequent Sequences with F_CTL bit 9 set to zero.

#### 21.7.2.4 Recipient abnormal termination

If no Data frames are being received for a Sequence in error, the Sequence Recipient shall timeout the Sequence and abnormally terminate the Sequence by setting status in the Sequence Status Block to indicate Sequence timed-out by Recipient, update the Sequence status in the Exchange Status Block, and release link facilities associated with the Sequence. If an ABTS frame for the abnormally terminated Sequence is received, the Abort Sequence Protocol shall be performed and completed.

The Sequence Recipient may timeout the Exchange in a system dependent manner and timeout period.

#### 21.7.2.5 End_Sequence

If the last Data frame of a Sequence has been transmitted and the Sequence Initiator detects a Sequence timeout, the Initiator may initiate an Exchange with a Read Exchange Status Link Service request to determine Sequence and Exchange status. If the Initiator is in the process of timing out a Sequence for a missing EOFt with Sequence Initiative transferred and it receives a new Sequence initiated by the Recipient (new Initiator), it shall assume that the previous Sequence ended successfully. In order to make such an assumption, the N_Port_ID, OX_ID, and RX_ID shall be the same for the new Sequence as the Sequence that transferred Sequence Initiative.

From a Recipient view, if the last Data frame is lost, the Recipient abnormally terminates the Sequence when a Sequence timeout is detected.

### 21.7.3 Stop Sequence Protocol

The Stop Sequence Protocol shall be used by a Sequence Recipient to terminate a Sequence without invoking a drastic recovery protocol. To cause a Sequence to be terminated by the Initiator, the Sequence Recipient shall set the Abort Sequence Condition bits in F_CTL to a ’10’ b value in the ACK to each Data frame received after the Recipient recognizes the need to terminate the Sequence. When the Sequence Initiator receives the first ACK with the Stop Sequence Condition indicated, it shall terminate the Sequence by transmitting a Data frame of the Sequence with End_Sequence = 1. If the Sequence Initiator has already transmitted the last Data frame of the Sequence, no further action is required of it except that which may be required by the FC-4 or upper level.

Once the Sequence Recipient has indicated the Stop Sequence condition, it shall not report Sequence errors related to Data frames with a SEQ_CNT greater than that of the Data frame at which the Stop Sequence condition was recognized. However, it shall observe the normal Sequence timeout protocols before transmitting the ACK to the frame with the End_Sequence bit set and shall recover Credit in the normal manner.

NOTE 1 When the Sequence Initiator stops the Sequence, or if it sent the last Data frame before receiving the Stop-Sequence indication, it may either hold or pass Sequence Initiative as determined by the Upper Level Protocol. It is the responsibility of the Upper Level Protocol to define the protocol for indicating to the Sequence Initiator why the Sequence was stopped, if such an indication is needed, and the protocol for transferring Sequence Initiative if needed.

NOTE 2 A common use of this protocol is to signal that there is no more room in the Upper Level Protocol buffer for the Data being received. To terminate the Sequence when the Upper Level Protocol buffer is exhausted, the Sequence Recipient stores as much data as possible from the first frame whose Payload is not completely stored and indicates the Stop Sequence condition in the Abort Sequence Condition bits in F_CTL in the ACK to that Data frame and in each subsequent ACK until the end of the Sequence. When the Sequence ends, the ULP protocol may send a message from the Sequence Recipient to the Initiator that includes the count of the number of bytes in the Sequence that were stored before the ULP buffer was exhausted.

### 21.7.4 End-to-end Credit loss

This standard does not define the method to be employed for Credit allocation to a destination Nx_Port. If destination Nx_Port end-to-end Credit is allocated on a Sequence basis, then that portion of end-to-end Credit is reclaimed when the Sequence is aborted or abnormally terminated. When a Sequence is aborted, any end-to-end Credit for outstanding ACK frames associated with that Sequence may be reclaimed. This applies to Classes 1, 2,

Copyright International Organization for Standardization
Provided by IHS under license with ISO
No reproduction or networking permitted without license from IHS Not for Resale

4 and 6.

## 21.8 Link Error Status Block

The errors shown in table 256 are accumulated over time within an Nx_Port. The format shown is the format in which the LESB information shall be supplied in response to an RLS ELS. It does not require any specific hardware or software implementation. The errors accumulated provide a coarse measure of the integrity of the link over time. No means is provided to reset the LESB. It may to overflow and thus reset. The counts shall be 32 bit values.

**Table 256 - Link Error Status Block format for RLS command**

| Bits / Word | 31 .. 00 |
|---|---|
| **0** | Link Failure Count |
| **1** | Loss-of-Synchronization Count |
| **2** | Loss-of-Signal Count |
| **3** | Primitive Sequence Protocol Error |
| **4** | Invalid Transmission Word |
| **5** | Invalid CRC Count |

NOTE 1 Informative guideline to manage LESB is provided in Annex E.

An Nx_Port may choose to log these events as well as other errors that occur on an Nx_Port specific basis, which is not defined in this standard.

NOTE 2 It is recommended that Fx_Ports also maintain an LESB and accumulate error events in a manner, which is not defined in this standard.

## 21.9 Detailed Error Detection/Actions

### 21.9.1 Errors detected

Table 257 lists 10 categories of errors that are detectable. The categories specified relate directly to link integrity or data integrity as previously discussed. This list is representative of the types of errors that may be detected. It is not an exhaustive list. Column 1 of table 257 specifies a general error category. Column 2 identifies specific errors within that general category. Column 3 identifies the action that the Sequence Initiator takes on ACK frame errors detected for Sequences being transmitted or link integrity errors (ACK frame reception is only applicable to Classes 1, 2, 4 and 6). Column 4 identifies the action that the Sequence Recipient takes on Data frame errors detected for the Sequences being received or link integrity errors.

--`,,```,,,,````-`-`,,`,,`,`,,`---

Copyright International Organization for Standardization
Provided by IHS under license with ISO
No reproduction or networking permitted without license from IHS Not for Resale

### 21.9.2 Actions by Initiator or Recipient

1) Discard frame
   In both discard and process policy, $SOF_{c1}$, $EOF_{dt}$, and $EOF_{dti}$ delimiters shall be processed for both invalid and valid frames. In both discard and process policy, a frame that is terminated with an $EOF_a$ shall be discarded.
   Discard policy: If an invalid frame is detected, the entire invalid frame shall be discarded. If a valid frame is received and a rejectable or busy condition in Class 3 is detected, the entire frame shall be discarded.
   Process policy: If an Nx_Port is able to determine that an invalid frame is associated with an Exchange which is designated as operating under Process policy, the Nx_Port may process and use the Data Field at its discretion, otherwise, the entire invalid frame shall be discarded.
2) Transmit P_RJT frame
   If a valid Data frame is received that contains information in the Frame_Header that is invalid or incorrect, a P_RJT frame shall be transmitted with the appropriate reason code as specified in 11.2.3.4. Reason codes are defined such that the first error detected is returned as the reason code. In Class 2, R_RDY is transmitted in response to the discarded frame.
   During a Class 1 or Class 6 dedicated connection, if a Data frame is received and no buffer is available, this indicates that the transmitter has an end-to-end Credit tracking problem. The reason code in P_RJT shall indicate protocol error.
3) Process Reject
   When a P_RJT or F_RJT frame is received in response to a frame transmission, the reject information shall be passed to the appropriate Upper Level Protocol in order to process. Certain errors are recoverable by taking an appropriate action (e.g.Login). The Sequence shall be aborted using the Abort Sequence Protocol, regardless of possible recovery actions. For typical non-retryable errors the Exchange shall also be aborted.
   If a P_RJT or F_RJT frame is received that contains information in the Frame_Header that is invalid or incorrect, the frame shall be discarded.

**Table 257 - Detailed errors and actions**

| Error Category | Specific Error | Seq Init Action | Seq Recp Action |
|---|---|---|---|
| Link Failure | Loss-of-Signal<br>Loss of Sync> timeout period | 12<br>12 | 12<br>12 |
| Link Errors | Invalid Transmission Word during frame reception<br>Invalid Transmission Word outside of frame reception<br>Loss of Sync | 1,11<br>11<br>11 | 1,11<br>11<br>11 |
| Link Timeout | Class 1: all Sequences timed out<br>missing R_RDYs (buffer-to buffer credit = 0) | 6<br>6 | 6<br>6 |
| Link Reset protocol timeout | missing LRR response to LR transmission<br>missing Idle response to LRR transmission | 12<br>12 | 12<br>12 |
| Sequence timeout | timeout during Sequence<br>timeout at end of Sequence | 8, 10<br>8, 14, 10 | 9<br>9 |
| Delimiter Errors | Class not supported<br>Delimiter usage error (SOFct while connected)<br>Abnormal frame termination<br>EOFa received<br>Incorrect SOF or EOF (see tables 42 and 44) | 2<br>2<br>1<br>1<br>1 | 2<br>2<br>1<br>1<br>1 |
| Address Identifier errors | incorrect D_ID<br>incorrect S_ID | 2<br>2 | 2<br>2 |

Copyright International Organization for Standardization
Provided by IHS under license with ISO
No reproduction or networking permitted without license from IHS Not for Resale

**Table 257 - Detailed errors and actions (Continued)**

| Error Category | Specific Error | Seq Init Action | Seq Recp Action |
|---|---|---|---|
| Frame_Content errors | CRC | 1 | 1 |
| | Busy frame received | 5 | 5 |
| | Reject frame received | 3 | 3 |
| | TYPE not supported | 2 | 2 |
| | Invalid Link_Control | 2 | 2 |
| | Invalid R_CTL | 2 | 2 |
| | Invalid F_CTL | 2 | 2 |
| | Invalid OX_ID | 2 | 2 |
| | Invalid RX_ID | 2 | 2 |
| | Invalid SEQ_ID | 2 | 2 |
| | Invalid SEQ_CNT | 2 | 2 |
| | Invalid DF_CTL | 2 | 2 |
| | Exchange Error | 2 | 2 |
| | Protocol Error | 2 | 2 |
| | Incorrect length | 2 | 2 |
| | Unexpected Link_Continue | 2 | 2 |
| | Unexpected Link_Response | 2 | 2 |
| | Login Required | 2 | 2 |
| | Excessive Sequences attempted | 2 | 2 |
| | Unable to Establish Exchange | 2 | 2 |
| | Relative offset out of bounds | N/A | 2 |
| Data frame errors | buffer not available - Class 1 | N/A | 2.7 |
| | buffer not available - Classes 2 and 4 | N/A | 4 |
| | buffer not available - Class 3 | N/A | 1 |
| | ABTS frame received | N/A | 8 |
| | missing frame error detection | N/A | 13,7 |
| ACK_1 frame errors | ABTS frame received | 8,10 | N/A |
| | missing frame error detection | 13,8 | N/A |

4) Transmit P_BSY frame

An Nx_Port shall track the status of its buffers such that if a Class 2 Data frame is received and no EE_buffer is available, a P_BSY shall be returned to the transmitter of the frame. If a Class 2 Data frame is received and no BB_buffer is available, the Recipient may discard the frame without issuing a P_BSY or P_RJT. Portions of the frame other than the Frame_Header are discarded. The Frame_Header is captured in order to generate a proper P_BSY Link_Response frame.

If an Nx_Port receives a Class 1 and 6 connect-request frame and its internal link facilities are busy or unavailable, the Nx_Port responds by transmitting a P_BSY frame with the appropriate reason code (see 11.2.3.4.3) with EOFdt. Portions of the frame other than the Frame_Header are discarded. The Frame_Header is captured in order to generate a proper P_BSY Link_Response frame.

An R_RDY is transmitted in response to a Class 2 frame or a Class 1 or 6 connect-request regardless of the disposition of the received frame.

5) Process Busy

When an F_BSY or P_BSY is received in response to a Class 1 or 6 connect-request, the Nx_Port may:

a) attempt a connect-request to a different destination Nx_Port if such a request is pending,

b) delay a period of time before reissuing the connect-request, or

Copyright International Organization for Standardization
Provided by IHS under license with ISO
No reproduction or networking permitted without license from IHS Not for Resale

c) immediately reissue the connect-request.

The Fabric shall not queue a connect-request, if the destination Nx_Port has responded with a P_BSY to the connect-request.

The decision as to which action to take is dictated based on the conditions in the Nx_Port and the period of time lost if another busy condition is returned.

When an F_BSY or P_BSY is received in response to a Class 2 Data frame, and if the Nx_Port has the capability to retransmit, the Nx_Port shall retransmit the Class 2 Data frame within E_D_TOV of the last Data frame transmission. In order to avoid reissuing a frame for an extended number of retries an Nx_Port may choose to count the number of retries and decide to shutdown communication with a specific Nx_Port.

When an F_BSY is received in response to an ACK frame (Class 2), the Nx_Port shall not retransmit the ACK frame.

6) Perform Link Reset Protocol

When an Nx_Port has reached a buffer-to-buffer Credit_CNT of zero and has exceeded the Link timeout period (E_D_TOV), a Link timeout is detected. In Class 1 and 6, if an Nx_Port has timed out all open Sequences (E_D_TOV), a Link timeout is detected. When a Link timeout is detected, the Nx_Port or Fx_Port begins the Link Reset Protocol.

In addition, in Class 1 and 6 an Nx_Port may not know whether a dedicated connection exists or not. An Nx_Port may initiate the Link Reset Protocol in order to reach a known state.

7) Set Abort Sequence Bits

When a Sequence Recipient detects a Sequence error by missing frame detection or other internal processing errors, the Recipient sets the appropriate Abort Sequence in F_CTL bits 5 to 4.

’00’ b = Continue Sequence

’01’ b = Abort, perform ABTS

’10’ b = Stop Sequence

’11’ b = Immediate Sequence retransmission requested

The SEQ_CNT of the first missing frame is saved in the Sequence Status Block. Only the first error is saved in the Sequence Status Block. This information may or may not be required by the Sequence Initiator for recovery purposes.

8) Perform Abort Sequence Protocol

When a Sequence Initiator detects a Sequence error or receives an appropriate Abort Sequence Condition (’01’ b) in F_CTL bits 5 to 4 in an ACK for an active Sequence, the Initiator shall transmit an Abort Sequence Link Service request to the Recipient and transfers Sequence Initiative in order to complete Abort Sequence processing (see 21.7.2).

When a Sequence Recipient receives an ABTS frame, it shall respond as specified in 21.7.2.2 and 12.2.2**.**

9) Abnormally terminate Sequence

When a Sequence Recipient detects a Sequence timeout (E_D_TOV) and no Data frames are being received for the Sequence, the Recipient shall terminate the Sequence and update the Exchange Status Block.

When a Class 1 or 6 dedicated connection is removed by an EOF delimiter or a Primitive Sequence, the Nx_Port shall abnormally terminate any active Sequences (see 21.7.2).

10) Retry Sequence

When a Sequence has been abnormally terminated, the Sequence Initiator may retransmit the Sequence under guidance, authorization, or control of the FC-4 or upper level. Under guidance from the upper level, it may retransmit immediately under the Discard multiple Sequences with immediate Retransmission Exchange Error Policy in Class 1 or 6 (see 21.7.2.3). For other Exchange Error Policies, each individual FC-4 shall specify the procedure for Sequence retransmission, if any.

11) Update LESB

The Link Error Status Block is updated to track errors not directly related to an Exchange.

12) Perform Link Failure Protocol

Transmission or reception of the Not Operational Primitive Sequence initiates the Link Failure Protocol.

13) Error Policy processing

When an error is detected within a Sequence, the Sequence is either processed normally (process policy), or discarded (discard policy). See 21.6.3 for additional information.

14) Read Status Block

Read Status Block (either Sequence or Exchange) is accomplished by originating an Exchange with the appropriate ELS request.

Copyright International Organization for Standardization
Provided by IHS under license with ISO
No reproduction or networking permitted without license from IHS Not for Resale

# 22 Hunt Group

## 22.1 Introduction

A Hunt Group is a collection of one or more Nx_Ports controlled by a Common Controlling Entity. A Hunt Group is addressed using a Hunt Group Identifier (HG_ID) that is managed as an Alias_ID. The Hunt Group shall be formed by the registration of a group of one or more Nx_Ports with the Alias Server. An Nx_Port may be a member of multiple Hunt Groups and may be addressed by either its base address identifier or any one of its HG_IDs. Other methods may be used to select one of N destination Nx_Ports using only base address identifiers, however, those methods do not constitute a Hunt Group.

N_Port Login with a Hunt Group using the designated HG_ID shall be required prior to other communication. An Nx_Port using its base address identifier or HG_ID (Alias_ID) and the normal N_Port Login procedure may accomplish Login with a Hunt Group using the HG_ID as the destination address identifier. The formation and operation of a Hunt Group shall require specific support in both the Nx_Port and the Fabric.

The Alias Server handles the registration of Nx_Ports into a Hunt Group, and the deregistration of Nx_Ports from a Hunt Group. The Alias Server is not involved in the routing of Hunt Group frames.

Hunt Group routing is part of the adaptive addressing protocol specified in 22.7.

Hunt Group operations are applicable to Classes 1, 2, 3, 4 and 6.

Hunt Group is an optional communication model. To support this model, Fabrics and Nx_Ports shall have the additional capability specified.

## 22.2 Function

The function of a Hunt Group is to provide a HG_ID (Alias_ID) that shall be used by the Fabric to select a single available Nx_Port out of the group of possible Nx_Ports as the destination (D_ID) of a frame. This increases the likelihood of locating a destination Nx_Port that is not engaged in a Class 1 or 6 connection. In Class 2, Hunt Groups may also be used to increase aggregate bandwidth, reduce latency, or both.

## 22.3 Communication Model

The Hunt Group communication model is an extension of Nx_Port to Nx_Port communication. Since a Hunt Group is a collection of Nx_Ports, the following combinations are supported in this model:

a) Nx_Port to Nx_Port
b) Nx_Port to Hunt Group
c) Hunt Group to Hunt Group

All combinations are supported as part of the adaptive addressing protocol, specified in 22.7.

## 22.4 Applicability

### 22.4.1 Classes

Class 1, 2, 3, 4 or 6 may be used with Hunt Group. Common Controlling Entity based or Port based allocation of resources required shall vary by class (see 22.8).

### 22.4.2 Class 4 Addressing

Class 4 S_ID addressing is different from other classes due to support of multiple Virtual Circuits per N_Port in Class 4. Since Class 4 S_ID is always associated with a specific Virtual Circuit ID, any Class 4 S_ID used in Hunt

Copyright International Organization for Standardization
Provided by IHS under license with ISO
No reproduction or networking permitted without license from IHS Not for Resale

Group have a specific Virtual Circuit ID associated with it, explicitly stated or not.

This address implication shall be valid for all mechanisms specified for Hunt Group for Class 4 N_Ports (e.g., an N_Port_ID K1 in Class 4 implies specifically, for example , K1(5) where 5 is the Virtual Circuit ID. A HG_ID K in Class 4 implies specifically, for example , K1(5), K2(9), and K3(25)).

## 22.5 Formation

### 22.5.1 General

A Hunt Group is formed by an Nx_Port under control of the Common Controlling Entity performing Hunt Group Registration with the Alias Server. The Nx_Port performing the registration need not be a member of the Hunt Group being formed but shall be under control of the Common Controlling Entity constituting the Hunt Group.

The Common Controlling Entity shall be responsible for allowing any of its Nx_Ports becoming a Hunt Group member and communicating common service parameters for such membership. The method by which the Common Controlling Entity informs its Nx_Ports is not defined by this standard.

During registration, the Alias Server shall inform each member Nx_Port of its HG_ID.

Providing Hunt Group information to a Fibre Channel Directory Server or Management Server is the responsibility of the Alias Server. At the end of the Hunt Group registration, the Alias Server has the following information:

a) Alias_ID assigned
b) Assigned Alias_ID is associated with Hunt Group
c) Node_Name associated with the list of Nx_Ports in the Hunt Group
d) List of Nx_Ports in the Hunt Group.

The Fabric Controller is responsible for distribution of Alias_IDs for HG_ID and Fabric Nx_Port Service Parameters to the appropriate internal facilities and Fx_Ports within the Fabric. The method for distributing this information within the Fabric is not defined by this standard.

### 22.5.2 Registration/deregistration

Registration of a list of Nx_Ports into or deregistration of a list of Nx_Ports from a Hunt Group by a Common Controlling Entity is performed by originating an Exchange with the Alias Server. Any Nx_Port under control of the Common Controlling Entity may be the Originator of the Exchange performing registration/deregistration in a class supported by the Fabric Controller and the Nx_Port. The third party authorization for registration or deregistration is the responsibility of the Common Controlling Entity which is not defined by this standard.

The Exchange may be used to:

a) create a Hunt Group with a list of member Nx_Ports,
b) add a list of Nx_Ports to an existing Hunt Group, or
c) delete a list of Nx_Ports of an existing Hunt Group.

HG_ID is managed as an Alias_ID. The detailed format and protocol for registration and deregistration are specified in clause 24.

The information transmitted by the Originator contains the following items:

a) Node_Name: The Node_Name of the Common Controlling Entity.
b) HG_ID: The HG_ID that is associated with an existing Hunt Group for add and delete functions. In the case of creating a Hunt Group, the HG_ID may be unidentified (zero) or a value requested by the Common Controlling Entity.

Copyright International Organization for Standardization
Provided by IHS under license with ISO
No reproduction or networking permitted without license from IHS Not for Resale

c) Nx_Ports: During creation of the Hunt Group, all member Nx_Ports are identified. During add or delete functions, member Nx_Ports being added or deleted are identified.
d) Common and Class Service Parameters: During the creation of a Hunt Group, the Fabric Nx_Port Service Parameters shared by each member Nx_Port for all classes shall be included in the same format and meaning as during the N_Port to Fabric Login procedure (see clause 15).

#### 22.5.3 Inquiry

The Hunt Group information may be available from the Directory Server, if Alias Server has communicated the information to the Directory Server (well-known address hex 'FF FF FC').

If the membership of a Hunt Group is uncertain, the Common Controlling Entity may replace its members by using appropriate Alias Server functions for an existing HG_ID.

#### 22.5.4 HG_ID Removal

Removal of a Hunt Group by a Common Controlling Entity is performed by originating an Exchange with the Alias Server. Any Nx_Port under control of the Common Controlling Entity may be the Originator of the Exchange performing the removal of a Hunt Group in a class supported by the Alias Server and the Nx_Port. The details of the Exchange are specified in the in clause 24.

## 22.6 N_Port Login

N_Port Login shall be required on an address identifier basis. Therefore, Login shall be performed with the HG_ID prior to communication other than Basic and Extended Link Applications. Login with any instance of the Alias_ID of HG_ID completes Login with all members of the Hunt Group (e.g., HG_ID = K (K1, K2, K3) and HG_ID = M (M1, M2, M3) exist. M shall be required to Login with K before M to K or K to M communication even if K1 has performed Login with M2. Likewise, K3 shall be required to Login with M2 before K3 to M2 communication even if K and M Login have been performed). N_Port Login shall have been completed between the S_ID and D_ID N_Port_IDs prior to communication of Upper Level Protocols for the first Data frame of the Exchange.

Each member Nx_Port of a specific Hunt Group shall operate with a single, identical set of Common and Class Service Parameters with the Fabric and destination Nx_Ports with which it communicates.

## 22.7 Addressing Protocol

#### 22.7.1 address identifier Protocol

An adaptive address identifier protocol is utilized when HG_ID are being employed to allow for multiple strategies for managing Exchange and Sequence resources. This adaptive address identifier protocol supports any combination of communication models (see 22.3).

#### 22.7.2 Originator

The Originator of an Exchange may specify its N_Port_ID or an HG_ID as S_ID in the first Data frame of the Exchange. The Originator may specify as the Responder's N_Port_ID or an HG_ID as D_ID in that frame.

#### 22.7.3 Responder

In the ACK to that first Data frame, the Responder shall address the Originator with the same HG_ID that the Originator identified itself in the first Data frame. However, the Responder may choose to use either its N_Port_ID or the HG_ID with which it is addressed by the Originator.

NOTE If the Responder specifies another HG_ID, the Originator may reject the Exchange with a reason code of "Protocol error".

--`,,```,,,,````-`-`,,`,,`,`,,`---

Copyright International Organization for Standardization
Provided by IHS under license with ISO
No reproduction or networking permitted without license from IHS Not for Resale

### 22.7.4 Address Resolution

After the first ACK has been specified, the identifiers for both Originator and Responder shall remain the same. The address resolution for different cases is summarized in the table 258.

**Table 258 - Address Resolution**

| Originator First Data frame S_ID, D_ID | Responder ACK to First Data frame S_ID, D_ID | Resolution Originator ID, Responder ID |
|---|---|---|
| ON_ID, RN_ID | RN_ID, ON_ID | ON_ID, RN_ID |
| | RL_ID, ON_ID | ON_ID, RL_ID |
| OK_ID, RN_ID | RN_ID, OK_ID | OK_ID, RN_ID |
| | RL_ID, OK_ID | RL_ID, ON_ID |
| ON_ID, RL_ID | RN_ID, ON_ID | RN_ID, ON_ID |
| | RL_ID, ON_ID | RL_ID, ON_ID |
| OK_ID, RL_ID | RN_ID, ON_ID | RN_ID, ON_ID |
| | RL_ID, ON_ID | RL_ID, ON_ID |
| Legend:<br>OK_ID - Originator N_Port_ID<br>OK_ID - Originator Hunt Group Alias ID<br>RN_ID - Responder N_Port_ID<br>RL_ID - Responder Hunt Group Alias ID | | |

### 22.7.5 Class

The address resolution is applicable to Class 1, 2, 4 and 6, since ACK is used in the protocol. As there are no ACKs in Class 3, address resolution is not possible and HG_ID shall be used throughout the Exchange.

### 22.7.6 Class 4

The address resolution summarized in table 258 shall be valid for Class 4 also, with the Class 4 address implication specified in 22.4.2.

## 22.8 Resource management

### 22.8.1 Introduction

Since a Hunt Group may span multiple Nx_Ports, resources may be managed by the Common Controlling Entity and by Nx_Port. The sharing of resources may be implemented in various combinations. The arrangement of control and status block elements is only logical and does not necessarily imply any physical relationship.

An Nx_Port uses S_ID, D_ID, X_ID (OX_ID for Originator, RX_ID for Responder), SEQ_ID and Context bits to uniquely identify frames within a Sequence received by the Nx_Port. An Nx_Port may use any or all of the control entities for a given implementation.

When an Nx_Port supports multiple address identifiers or common address identifiers for S_ID, D_ID, or both, Sequence and frame identification alters Nx_Port behavior. The manner in which HG_ID are utilized within an Nx_Port leads to various logical models of Nx_Port resources.

Copyright International Organization for Standardization
Provided by IHS under license with ISO
No reproduction or networking permitted without license from IHS Not for Resale

Based on the organization of resources within an Nx_Port and Common Controlling Entity and the Class of Service, the Originator or Responder shall choose HG_ID or N_Port_ID for an Exchange.

#### 22.8.2 HG_ID use

For an Originator or a Responder to use a HG_ID, the following resource requirements shall be met:

a) Class 1 and 6
   A) Exchange resources (ESB, OX_ID) shall be Common Control Entity managed
   B) Sequence resources (SSB) may be Nx_Port managed or Common Controlling Entity managed
b) Class 2
   A) Exchange resources (ESB, OX_ID) shall be Common Controlling Entity managed
   B) Sequence resources (SSB) shall be Common Controlling Entity managed
c) Class 3
   A) Exchange resources (ESB, OX_ID) shall be Common Controlling Entity managed
   B) Sequence resources (SSB) shall be Common Controlling Entity managed
d) Class 4
   A) Exchange resources (ESB, OX_ID) shall be Common Controlling Entity managed
   B) Sequence resources (SSB) shall be Common Controlling Entity managed

#### 22.8.3 N_Port_ID use

For an Originator or a Responder to use its N_Port_ID, there are no additional requirements for resource organization. All resources may be Common Controlling Entity managed or Nx_Port managed or shared between them. If shared, the SSB, ESB, X_ID control hierarchy shall be retained.

## 22.9 Rotary Group

Rotary Group may be used to increase the bandwidth and reduce latency but does not fall under the category of Hunt Group.

Existence of Rotary Group shall be transparent to compliant Nx_Ports or Fx_Ports.

A Rotary Group is a collection of one or more Nx_Ports controlled by a Common Controlling Entity and a cooperative Fabric (see [7], FC-SW-3) in which any member of the Rotary Group may respond in a transparent way to non-participating Nx_Ports.

NOTE In this way, systems that handle more bandwidth than the attached Nx_Ports provides, may utilize multiple Nx_Port to Fabric connections to extend their achievable bandwidth.

Rotary Group are formed and managed on a local basis, both in the participating Nx_Ports host (Common Controlling Entity) and in the Fabric, by the System administration.

The overall objective of a Rotary Group is that other Nx_Ports or Directory Services interact with the Group in a completely transparent manner (i.e., Nx_Ports that are not members of the Group do not know or care about the existence or non existence of the Rotary Group). Non-participating Nx_Ports address any Nx_Port of the Rotary group by its native address. No matter which Nx_Port of the Rotary Group responds, the Non-Participating Nx_Port receives acknowledgments and other communications associated with an established Exchanges with the Group as if it were communicating only with the native address of the Group with which it had originally established the exchange (see figure 37).

In Class 1 and 6, a switch with Rotary Group support may be configured administratively to connect any connection request for a specific member of a Rotary group to any available member of that group. In Class 2 and 3, a Switch with Rotary Group support may be configured administratively to route any frame addressed for a specific member of a Rotary group to any available member of that group (see [7], FC-SW-3).

Copyright International Organization for Standardization
Provided by IHS under license with ISO
No reproduction or networking permitted without license from IHS Not for Resale

A Rotary Group member Nx_Port, under direction of its Common Controlling Entity, returns the address with which it was addressed as it source address (no matter which Rotary Nx_Port is actually comes from) in instances where it is the exchange responder. The Common Controlling Entity may use any available Nx_Port of its Rotary Group that is logged in to a destination Nx_Port for those exchanges where it is the exchange Originator. The Common Controlling Entity manages the resources (i.e., buffers, state tables) as a pool for all of the participating Rotary Group Nx_Ports.

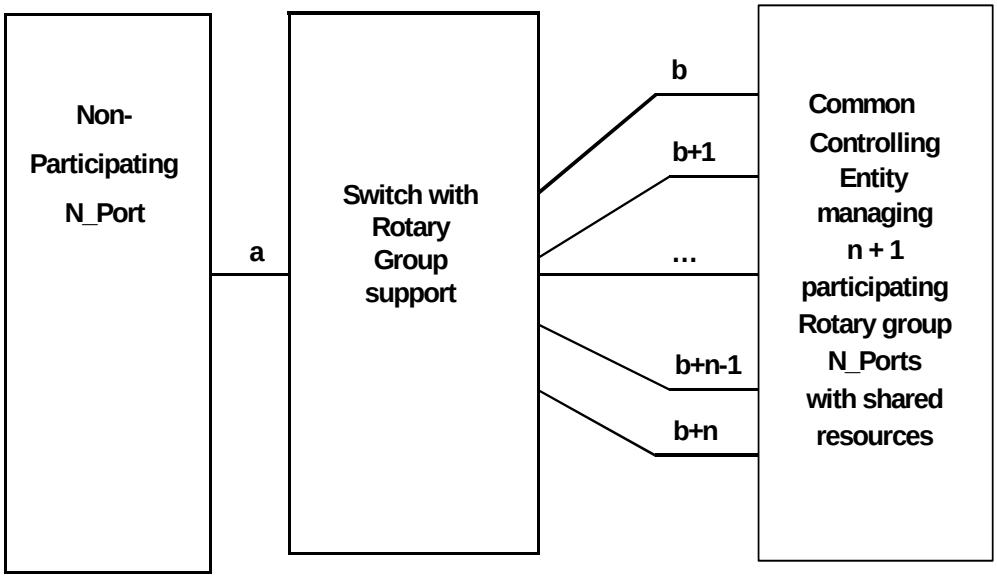


**Legend: a = address of the Non Participating N_Port,**
**b through b+n = addresses of n Participating N_Ports with one Common Controlling Entity**

**Figure 37 - Relationship of a Non-Participating to a Participating Nx_Port and switch**

--`,,```,,,,````-`-`,,`,,`,`,,`---

Copyright International Organization for Standardization
Provided by IHS under license with ISO
No reproduction or networking permitted without license from IHS Not for Resale

# 23 Multicast

## 23.1 Applicability

Multicast provides a service based on Fabric routing of Class 3 or Class 6 frames. For a multicast connection the Fabric routes frames from a source Nx_Port to many destination Nx_Ports.

Multicast operations are not applicable to Classes 1, 2 and 4.

## 23.2 Class 3 Multicast

### 23.2.1 Introduction

Class 3 multicast provides a service based on Fabric routing of Class 3 frames. When the Fabric receives a Class 3 frame that is to be multicast, it causes the frame to be delivered to every destination in the Multicast Group. A Multicast Group is a list of Nx_Ports to which a frame being multicast is delivered. A Multicast Group is managed by the Alias Server (hex 'FF FF F8') that handles the registration of Nx_Ports into a Multicast Group, and the de-registration of Nx_Ports from a Multicast Group. The Alias Server is not involved in the routing of multicast frames.

### 23.2.2 Registration and De-registration

The registration/de-registration by an Nx_Port as a member of a Multicast Group with the Alias Server (hex 'FFFFF8') is specified in clause 24. An Nx_Port may register itself as a member of one or more Multicast Groups. An Nx_Port may register a list of Nx_Ports as members of one or more Multicast Groups. The third party authorization for registration or de-registration is outside the scope of the document.

### 23.2.3 Multicast Routing

The Fabric, based on recognition that the D_ID of the transmitted frame is an MG_ID Alias_ID, does all routing of multicast frames. The exact frame that entered the Fabric is replicated to every destination Nx_Port in the Multicast Group associated with the MG_ID of the frame. The Fabric shall not alter the frame header or the frame contents in any manner during this replication.

The Sequence Initiator performs no special function to transmit a frame to be multicast other than use a D_ID indicating the MG_ID and the Multicast Group Service Parameters, rather than the Login Service Parameters (e.g., the Receive Data Field Size for a multicast frame may be different than the Receive Data Field Size for a unicast frame).

If the Sequence Recipient is a member of a Multicast Group, it shall recognize the MG_ID as an Alias_ID and accept the frame.

The Fabric shall reject Class 1, Class 2, and Class 4 frames with a D_ID equal to a MG_ID.

Figure 38 illustrates the multicast routing. Nx_Port B, C, D, and E are members of a Multicast Group. Nx_Port A is the message sender that may not be a member of the group. If it is a member, it may optionally receive the same message (see [6], FC-GS-4).

--`,,```,,,,````-`-`,,`,,`,`,,`---
Copyright International Organization for Standardization
Provided by IHS under license with ISO
No reproduction or networking permitted without license from IHS Not for Resale

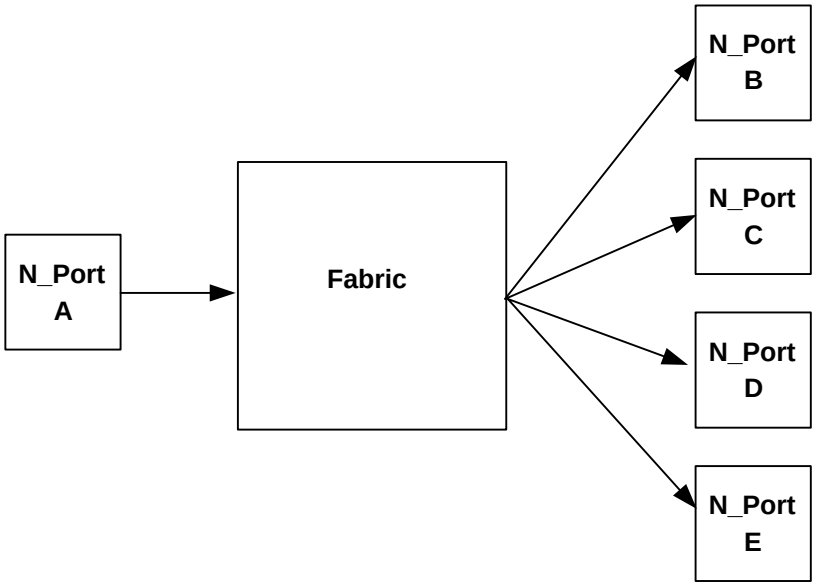


**Figure 38 - Class 3 Multicast Routing**

### 23.2.4 Class 3 Multicast Rules

a) The Sequence Initiator of the Multicast message shall follow the uniqueness rules for OX_ID, SEQ_ID, and SEQ_CNT. RX_ID for the Sequence shall be set to hex 'FF FF'.
b) D_ID in all frames shall be the Alias_ID for the Multicast Group. S_ID in all frames shall be the N_Port_ID of the Sequence Initiator.
c) The Fabric shall not alter the frame in any way. The Fabric shall simply replicate each frame to every group member.
d) Sequence Initiative shall not be transferred.
e) If any group member is not powered on or able to receive the frame for any other reason, the Fabric Controller shall not retransmit the frames.
f) All multicast frames shall be routed in Class 3.

## 23.3 Class 6 Multicast

### 23.3.1 Introduction

Class 6 is a connection oriented multicast service for use with a Fabric. This is an optional service allowing the establishment of a Class 6 connection between a single source N_Port and multiple destination N_Ports. The Class 6 connection provides a multiplication of the bandwidth of the link between the source N_Port and the Fabric by the number of destination N_Ports.

A multicast Source establishes a Class 6 connection by generating a connect request frame to the Fabric using an Alias_ID to a multicast group. The Alias_ID is a 24-bit value placed in the D_ID field as defined in 9. A multicast Source is the source N_Port for a Class 6 connection; a multicast group is a set of N_Ports that have subscribed to receive the same device data from a single multicast Source. The definition of the subscription and removal process is not defined by this standard. The Fabric recognizes the multicast Alias_ID, establishes connections between the multicast Source and the multicast group, and delivers the Class 6 connect request to the multicast group.

The Fabric routes all Link_Response frames (ACK, RJT, etc.) to a Multicast Server. The Multicast Server is responsible for collecting all responses and from participating N_Ports and generating a single response back to the multicast Source.

Copyright International Organization for Standardization
Provided by IHS under license with ISO
No reproduction or networking permitted without license from IHS Not for Resale

Class 6 frames use SOF/EOF delimiters identical to Class 1 frames. Normal connection setup and removal follows the rules for Class 1 connections specified in clause 20. Similarly, Class 6 connect request frames follow the rules for buffer-to-buffer flow control specified 18.5.

NOTE A system implementation may provide less than reliable multicast service by implementing a single Sequence with infinite credit.

### 23.3.2 Class 6 Multicast Routing

The Fabric, based on the recognition that the D_ID of the transmitted frame is a multicast address does all routing of multicast frames. The exact frame that entered the Fabric is replicated to every destination N_Port indicated. The Fabric shall not alter the frame header or the frame contents in any manner during this replication.

Figure 39 illustrates the multicast routing. N_Ports B, C, D and E are members of a Multicast group. N_Port A is the multicast Source.

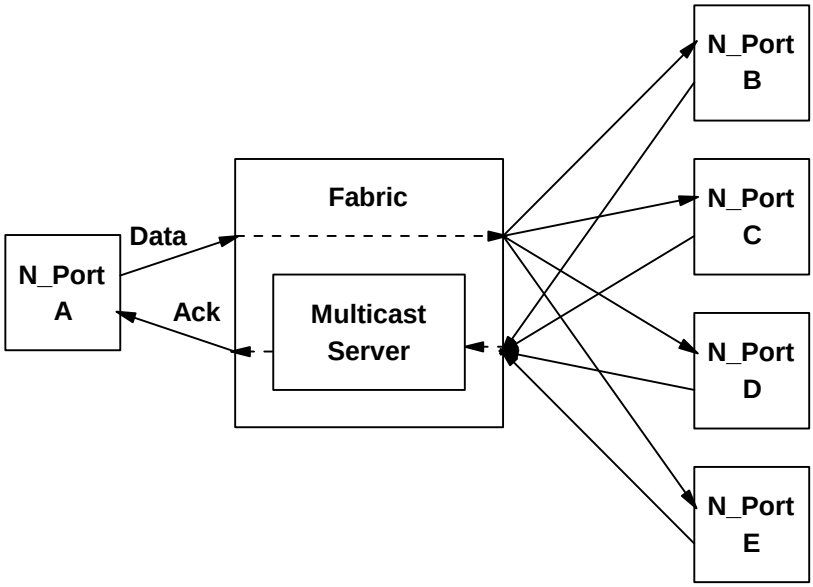


**Figure 39 - Class 6 Multicast Routing**

### 23.3.3 Class 6 Multicast Rules

The following are the Class 6 multicast rules:

a) The multicast Source shall follow the uniqueness rules for OX_ID, SEQ_ID, and SEQ_CNT. X_ID interlock is not supported for Class 6 Exchanges. The multicast Source shall be the Connection Initiator for all multicast sequences. RX_ID is not used in Class 6 and shall be set to hex 'FF FF' for all Class 6 frames.
b) The D_ID in all device Data frames shall be a multicast Alias_ID. The S_ID in all device Data frames shall be the N_Port_ID of the multicast Source and may also be an Alias_ID.
c) The Fabric shall not alter the frame in any way. The Fabric shall simply replicate each frame to every group member.
d) Sequence Initiative shall not be transferred.
e) All Class 6 multicast frames shall be routed as uni-directional dedicated connections.
f) If one or more F_Ports or destination N_Ports fail to return an R_RDY in response to the Class 6 connect request frame for a period greater than E_D_TOV, the Fabric shall initiate the Link Reset protocol for all participating N_Ports.
g) If the Multicast Server receives identical, valid Link_Control frames from all multicast group members, it shall forward a single copy of that Link_Control frame to the multicast Source.

--`,,```,,,,````-`-`,,`,,`,`,,`---
Copyright International Organization for Standardization
Provided by IHS under license with ISO
No reproduction or networking permitted without license from IHS
Not for Resale

h) If the Multicast Server receives at least one invalid Link_Control frame it shall cause the Fabric to initiate the Link Reset protocol for all participating N_Ports.
i) If the Multicast Server receives at least two non-matching Link_Control frames it shall cause the Fabric to initiate the Link Reset protocol for all participating N_Ports.
j) Class 1 service parameters, as specified during Login, shall be used to manage Class 6 multicast connections.
k) The effect of preemption of the multicast Source or destination N_Port(s) shall result in all participating N_Ports being preempted.

#### 23.3.4 Class 6 Multicast Server

To provide a single consistent response to the requesting N_Port, all destination N_Port responses shall be managed by a multicast server (hex 'FF FF F5'). Based upon the type of responses returned from the destination N_Ports (i.e., ACK, P_RJT, or P_BUSY), the multicast server shall return a single ACK, busy, or reject (with a valid reason code) frame to the requesting N_Port as follows:

a) Respond with an ACK only if all destination N_Ports respond with identical ACK frames before E_D_TOV has expired since the sending of the last multicast connect request or device Data frame.
b) Respond with a busy, with a “Multicast busy” reason code (see table 51) if all destination N_Ports respond with identical valid busy Link_Control Frames.
c) Respond with a reject, with a “Multicast error” reason code (see table 54) if all destination N_Ports respond with identical valid reject Link_Control Frames.
d) Initiate the Link Reset protocol for all participating N_Ports if all destination N_Ports do not respond with identical valid Link_Control Frames.
e) Respond with a reject, with an EOFdt delimiter and a “Multicast error terminate” reason code (see table 54), if one or more destinations respond with an ACK, BSY, or RJT frame with an EOFdt delimiter.
f) Initiate the Link Reset protocol for all participating N_Ports if one or more destination N_Ports respond with a Link Reset (LR), or if one or more destinations respond with a Link Reset Response (LRR). Once the Link Reset protocol is initiated, the Class 6 Connection is assumed to be terminated and the Multicast Server is no longer a participant.

Once a Class 6 connection is established, end-to-end credit is managed between the Connection Initiator and the multicast server.

#### 23.3.5 Class 6 Multicast Recovery

If the multicast Source receives from the Multicast Server a busy or a reject with an EOFdt delimiter, the multicast Source shall consider the multicast connection removed. Recovery is then performed at the Sequence or Exchange level. The mechanisms and conditions under which recovery may be performed are vendor-unique.

## 23.4 Broadcast

A frame addressed to the Well-known address for Broadcast (i.e., hex ’FF-FF-FF’) is a Broadcast frame. The Fabric shall attempt to send the Broadcast frame to all possible Nx_Ports within zoning constraints. However, the Fabric may not be able to deliver to all Nx_Ports for any number of reasons (e.g., class mismatch or Nx_Port not operational).

Broadcast is considered a simplification of Class 3 multicast. No explicit registration or de-registration is required to send or receive Broadcast frames. An Nx_Port may discard a Broadcast frame.

An Nx_Port shall send and receive Class 3 Broadcast Data frames in the context of an implicit Broadcast Port Login. The implicit Broadcast Port Login is particular because it is not tied to any remote N_Port_Name and Node_Name, but it is tied to the destination address identifier hex ’FF FF FF’.

The implicit Broadcast Port Login specifies the service parameters to be used for broadcast communications. An FC-4 using the Broadcast functionality may specify the service parameters that it requires in the implicit Broadcast

Copyright International Organization for Standardization
Provided by IHS under license with ISO
No reproduction or networking permitted without license from IHS Not for Resale

Port Login. In absence of such a specification, the default login parameters specified in 15.2 shall be used.

## 23.5 Other

Other forms of multicast are available in topology specific configurations. For examples, See [2], FC-AL-2, for a description of Selective Replicate to perform dynamic multicasting.

Copyright International Organization for Standardization
Provided by IHS under license with ISO
No reproduction or networking permitted without license from IHS Not for Resale

# 24 Alias_IDs

## 24.1 Introduction

Alias_ID is an address recognized by one or more Nx_Ports or the Alias Server, if the Nx_Port has registered with the Alias Server (hex 'FF FF F8') as a member of a group. Thus an Nx_Port may be able to recognize one or more Alias_IDs in addition to its N_Port_ID.

Presently defined Alias_IDs are:

a) HG_ID, and
b) Multicast Group Identifier.

A given Nx_Port may register with one or more Hunt Groups and/or with one or more Multicast Groups.

See clause 22 for Hunt Group and clause 23 for Multicast operations for the applicable classes of service.

NOTE Well-known addresses specified in table 21 are allocated for special functions (e.g., Directory Server) These special addresses are not to be confused with Alias_IDs.

## 24.2 Alias Server

The Alias Server manages the registration and deregistration of Alias_IDs for both Hunt Groups and Multicast Groups. The Alias Server is not involved in the routing of frames for any Group.

'The Alias Server (hex 'FF FF F8') may be internal or external to the Fabric. The following subclauses describe the registration.deregistration process in more detail.'

## 24.3 Alias Service protocol

Alias_ID registration and deregistration are managed through protocols containing a set of request/reply Information Units supported by the Alias Server. These requests and replies use constructs as defined in FC-GS-3.

## 24.4 Alias_ID Routing

The Fabric, based on a recognition that the D_ID of the transmitted frame is an Alias_ID, does all routing of frames. For Multicast groups, the exact frame that entered the Fabric is replicated to every destination Nx_Port in the Multicast Group associated with the Alias_ID of the frame. The Fabric shall not alter the frame header or the frame contents in any manner during this replication. For Hunt Groups, the exact frame that entered the Fabric is routed to a single destination Nx_Port in the Hunt Group.

NOTE The Fabric may assign Alias_IDs to easily partition Multicast Group Alias_IDs from Hunt Group Alias_IDs.

The Sequence Initiator performs no special function to transmit a frame other than to use a D_ID indicating the Alias_ID and to use the Alias_ID Group Service Parameters, rather than the Login Service Parameters (e.g., the Receive Data Field Size for a multicast frame may be different than the Receive Data Field Size for a unicast frame).

If the Sequence Recipient is a member of an Alias_ID Group, it shall recognize the Alias_ID as an Alias_ID and accept the frame.

For Multicast Groups, the Fabric shall reject Class 1 and Class 2 frames with a D_ID equal to an Alias_ID.

--`,,```,,,,````-`-`,,`,,`,`,,`---

Copyright International Organization for Standardization
Provided by IHS under license with ISO
No reproduction or networking permitted without license from IHS Not for Resale

## 24.5 Function Flow

Figure 40 illustrates the flow among the Originator Nx_Port, participating Nx_Ports, Alias Server, Directory Server, and Fabric Controller to create an Alias Group.

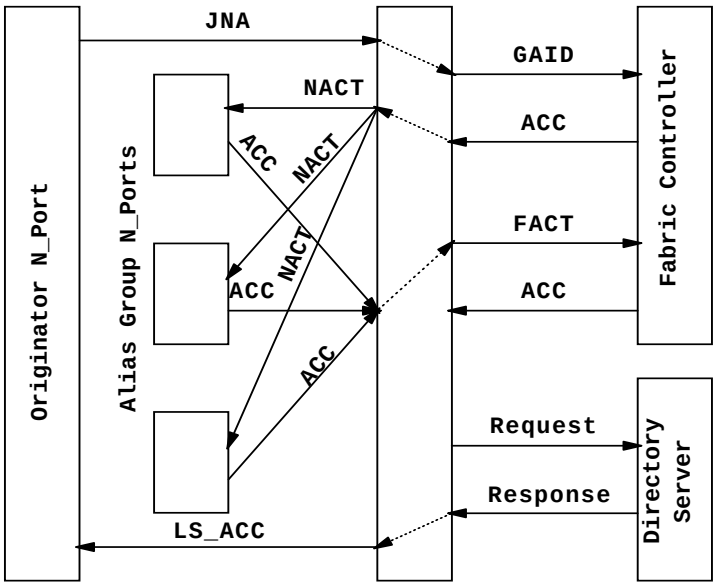


**Figure 40 - Function Flow**

## 24.6 PA Considerations

### 24.6.1 Hunt Groups

For Hunt Groups, there are no Initial Process Associator considerations, since there is a requirement that all members of a Hunt Group be within a single Common Controlling Entity that shall not be spread across images. Therefore, the same IPA may be used no matter which Nx_Port receives the frame.

### 24.6.2 Multicast Groups

For Multicast Groups, the considerations for multicasting to Nx_Ports that require an Initial Process Associator are minimal as any multicasting behind the Nx_Port is handled internally. It is not necessary to know the Initial Process Associator of each image behind an Nx_Port that belongs to a Multicast Group. Instead, if the Multicast Group requires an IPA, then the Sequence Initiator uses a Multicast Group Initial Process Associator (MG_IPA). This MG_IPA is common for all images that belong to the same Multicast Group. An MG_IPA is set in the Association_Header as follows:

a) The Responder Process Associator is set equal to the Alias_Qualifier for the Multicast Group.
b) Bit 24 of the Association_Header Validity bits is set to one. This indicates an MG_IPA.

Internally, images shall register with their Nx_Ports to join Multicast Groups, they do not register with the Alias Server (hex 'FF FF F8'). The MG_IPA becomes an Alias_ID for the actual Initial Process Associator of the image and is recognized as such by the Nx_Port as a result of the internal registration. When a frame is received, the Nx_Port multicasts the Payload to all images in the internal Multicast Group, based on the MG_IPA.

Copyright International Organization for Standardization
Provided by IHS under license with ISO
No reproduction or networking permitted without license from IHS Not for Resale

### 24.6.3 Broadcast

For Broadcast, there are no Initial Process Associator considerations. Since the intent of Broadcast is to deliver to all possible recipients, it is the responsibility of the Nx_Port receiving a broadcast frame to broadcast the Payload internally to all its images. Therefore, an Initial Process Associator shall not be included in a frame being Broadcast.

Copyright International Organization for Standardization
Provided by IHS under license with ISO
No reproduction or networking permitted without license from IHS Not for Resale

# 25 Class 4 – Fractional

## 25.1 Introduction

Class 4 Service is a connection oriented service for use with a Fabric (see 13.6). This is an optional service allowing the establishment of a Class 4 circuit between a pair of communicating N_Ports. The Class 4 circuit provides a fractional allocation of the resources of the path between the N_Ports.

A Class 4 circuit is bi-directional with one Virtual Circuit (VC) operational in each direction. Each VC may have different Quality of Service (QoS) parameters. These QoS parameters include guaranteed bandwidth and latency. An N_Port may have up to 254 coexistent Class 4 circuits with the same or different N_Ports.

Class 4 operation is separated into two parts, circuit setup and circuit activation figure 41. During the setup process, QoS parameters for both VCs are provided by the circuit initiator N_Port (CTI) and granted by the Fabric and the circuit recipient N_Port (CTR). The Fabric establishes a Class 4 circuit, in the Dormant State when the Fabric grants the setup. The Class 4 circuit setup process incurs a one-time round trip delay.

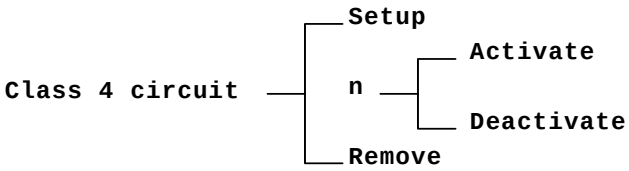


**Figure 41 - Class 4 Circuit hierarchy**

During the circuit activation process, both the Dormant VCs of the Class 4 circuit are put in the Live State to allow communication between the associated CTI and CTR.

The resources of an established Class 4 circuit are available on call so participating N_Ports may activate the circuit and deactivate it repeatedly (n) without paying any round trip delay penalty. Activation of a Class 4 circuit places it in the Live State and deactivation places the Class 4 circuit in the Dormant State.

A QoS Facilitator (QoSF) function is provided within the Fabric to establish and maintain QoS parameters for the Dormant VCs and manage them when the VCs are alive.

The Fabric regulates available bandwidth per Live VC by controlling the outbound frame flow out of the associated N_Ports. This is achieved by controlling credit, between the N_Port transmitter and the F_Port receiver, on a per VC basis, with the F_Port regulating credit to ensure the QoS parameters. This level of control permits congestion management for a Fabric.

Class 4 frames are never busied, since F_BSY and P_BSY are illegal responses to Data and Link_Control frames in Class 4.

In-order delivery of frames within a Class 4 circuit is guaranteed in Class 4 Service.

In Class 4, the Fabric is responsible for multiplexing frame belonging to different Live VCs between the same or different N_Port pairs.

Class 4 is applicable only to topologies where single N_Ports are attached to F_Ports.

Copyright International Organization for Standardization
Provided by IHS under license with ISO
No reproduction or networking permitted without license from IHS Not for Resale

## 25.2 Default N_Port Login service parameters

Prior to Login or following Logout, the following default set of Service Parameters shall apply:

a) Class validity = 1 (Class supported)
b) ACK_0 capable = 0 (ACK_0 incapable)
c) ACK generation assistance = 0 (no ACK generation assistance)
d) X_ID interlock = 1 (interlock required)
e) Error Policy supported = 00 (discard policy only)
f) Categories per Sequence = 1
g) Receive Data Field size = 256
h) Concurrent Sequences = 1
i) Open Sequences per Exchange = 1
j) Total Concurrent Sequences = 1
k) End-to-end Credit = 1
l) Relative offset not used
m) E_D_TOV Resolution = 0
n) BB_SC_N = 0
o) Other optionally supported features shall not be used or required.

## 25.3 Communication Model

### 25.3.1 Introduction

Class 4 service provides a guaranteed bandwidth between communicating N_Ports. The ELSs associated with Class 4 sets up a pair of unidirectional VCs between communicating N_Ports (see figure 42) to guarantee bandwidth and frame transmission delay.

Although there is a fixed route (path) through the Fabric for each VC between the communicating N_Ports and the Fabric regulates the VC_Credit, the path bandwidth may not be fully dedicated.

The Fabric regulates the N_Ports for frame transmission per VC. However, the communicating N_Ports may be unable to use the full requested bandwidth. This happens if there are no frames to transmit for the VC, if VC_Credit is unavailable or if EE_C4_Credit is unavailable. As a result that amount of bandwidth may be lost to the N_Port. It is possible that this lost bandwidth may be compensated for later, since excess bandwidth is allotted to Live Class 4 circuits and Class 2 or 3 traffic.

Multiple pairs of VCs may exist between one N_Port and one or more other N_Ports (see figure 43). The amount of bandwidth needed for each VC is requested when the Class 4 circuit is setup.

Copyright International Organization for Standardization
Provided by IHS under license with ISO
No reproduction or networking permitted without license from IHS Not for Resale

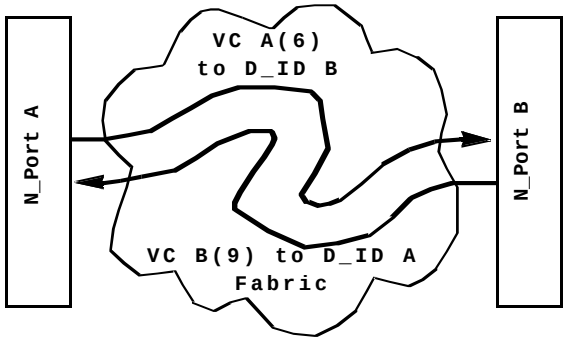


**Figure 42 - Basic Class 4 circuit**

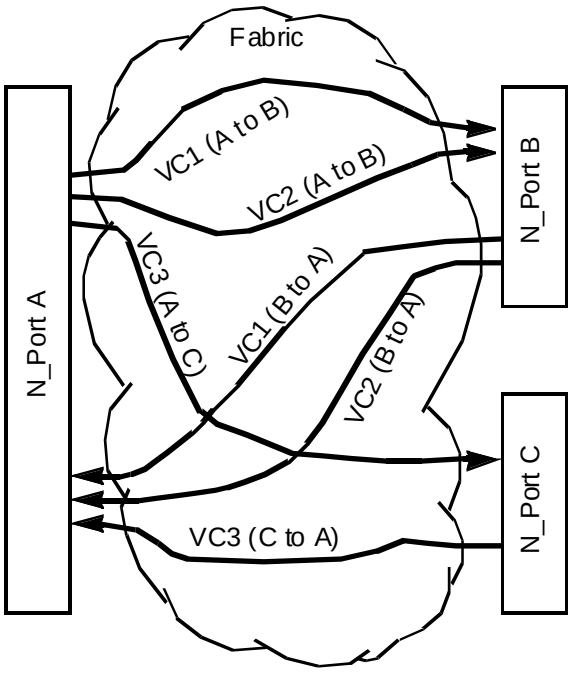


**Figure 43 - Class 4 circuits – Example**

### 25.3.2 In-order delivery

In-order delivery of Class 4 frames sent, on a Class 4 circuit, is guaranteed. However, no guarantees exist for frames sent on separate Class 4 circuits.

### 25.3.3 Guaranteed delivery

Class 4 provides acknowledged delivery of frames. This acknowledgment comes in the form of ACK, F_RJT or P_RJT Link_Control frames.

Copyright International Organization for Standardization
Provided by IHS under license with ISO
No reproduction or networking permitted without license from IHS Not for Resale

### 25.3.4 Fractional bandwidth management

For each Live VC the Fabric ensures the guaranteed bandwidth from a source N_Port to a destination N_Port. A Quality of Service Facilitator (QoSF) manages the guaranteed bandwidth. The Fabric enables a source N_Port to transmit frames in a timely manner.

In Class 4 the source N_Ports transmit frames into the Fabric when credit is available and the Fabric regulates available credit per VC to the source N_Port.

The Fabric routes frames based on the Virtual Circuit Identifier (VC_ID) field embedded in each Class 4 frame header (see figure 43).

The Fabric shall make unused bandwidth available for Live Class 4 circuits, Class 2 and Class 3 frames. Unused bandwidth available for Live Class 4 circuits, shall be allocated approximately in proportion to their requested maximum bandwidth requirements.

The Fabric may ensure that an N_Port does not transmit frames on a VC in excess of the requested maximum bandwidth limit.

### 25.3.5 Class 4 circuit

#### 25.3.5.1 Introduction

A Class 4 circuit requires that two unidirectional VCs be setup through the Fabric before Class 4 frames may be transmitted between the N_Ports. Figure 42 shows a Class 4 circuit between two N_Ports 'A' and 'B', one VC (VC A(6)) from port 'A' to 'B' and one VC (VC B(9)) from port 'B' to 'A'. Each VC has associated with it a set of QoS parameters and a path (see 25.3.5.2).

Table 259 illustrates how a Class 4 circuit should be setup between two N_Ports 'A' and 'B'. N_Port 'A' supports a data rate of 100 MBytes/sec, and 'B' a data rate of 25 MBytes/s. The VC from 'A' to 'B' (VC(1)) has a guaranteed minimum bandwidth of 15 MBytes/s and a maximum latency of 500 μs. The VC from 'B' to 'A' (VC(6)) has a guaranteed minimum bandwidth of 3 MBytes/s and a maximum latency of 2 000 μs. N_Port 'A' is left with an excess outbound bandwidth of 85 MBytes/s and an excess inbound bandwidth of 97 MBytes/s. The excess bandwidth for N_Port 'B' is 22 MBytes/s in the outbound direction and 10 MBytes/s in the inbound direction. Excess bandwidth may be used to enable transfers of more than the guaranteed minimum on the Class 4 circuit. The excess may be used for other Class 4 circuits or may be used for Class 2 or 3 Service.

Class 4 circuits and their VCs exist in one of four states:

a) Nonexisting,
b) Pending,
c) Dormant, or
d) Live.

A Ports State Diagram for a Class 4 circuit is shown in figure 44. The states and state transitions are described in the sub-clauses that follow.

Ports that support Class 4 shall, regardless of the state of Class 4 circuits, support interleaving of Class 2 and Class 3 in the Class 4 traffic frames based on the rules of those two classes of service.

--`,,```,,,,````-`-`,,`,,`,`,,`---

Copyright International Organization for Standardization
Provided by IHS under license with ISO
No reproduction or networking permitted without license from IHS Not for Resale

**Table 259 - Bandwidth Allocation Example**

| Class 4 Connection | | N_Port | | Rate (MB/s) | Max. Delay (μs) |
|---|---|---|---|---|---|
| | | ID | VC_ID | | |
| A ⇒ B | | A | (1) | 15 | 500 |
| A ⇐ B | | B | (6) | 3 | 2 000 |
| Free | A ⇒ | A | N/A | 85 | N/A |
| | A ⇐ | | N/A | 97 | |
| | B ⇒ | B | N/A | 22 | N/A |
| | B ⇐ | | N/A | 10 | |

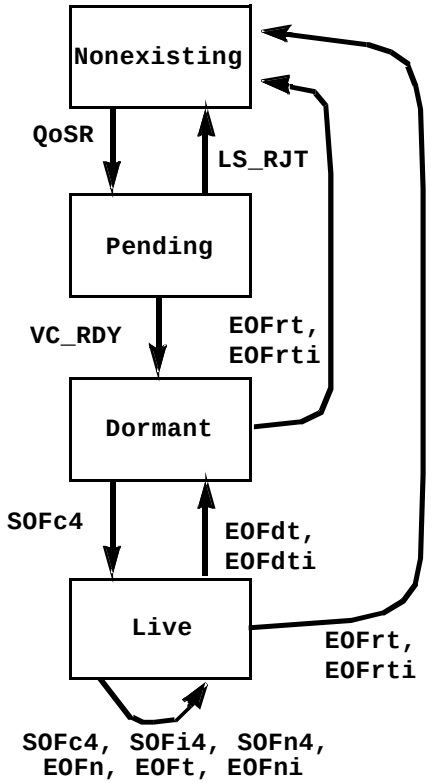


**Figure 44 - Class 4 circuit - Port level state diagram**

### 25.3.5.2 Setup

An N_Port requests setup of a Class 4 circuit to another N_Port by sending a Quality of Service request (QoSR) ELS command to the QoSF. The requesting N_Port becomes the circuit initiator (CTI) and the target N_Port the circuit recipient (CTR). The QoSR identifies the communicating N_Ports and the required QoS parameters.

Copyright International Organization for Standardization
Provided by IHS under license with ISO
No reproduction or networking permitted without license from IHS
Not for Resale

The QoSR is granted if the QoSF establishes a path between the communicating N_Ports with the requested QoS parameters and if the CTR also accepts the QoS parameters (see 12.3.2.38). If the QoSR is accepted, then a Class 4 circuit is established in the Pending State when the LS_ACC Sequence is returned to the CTI (see figure 45(a)).

The QoSR is rejected if the QoSF is unable to establish a path between the communicating N_Ports with the requested QoS parameters. The CTR is never queried if the QoSF is unable to establish a path between the communicating N_Ports (see figure 45(b)).

The QoSR is rejected if the QoSF establishes a path between the communicating N_Ports with the requested QoS parameters, but the CTR is unable to accept the QoSR (see figure 45(c)).

The CTI selects the QoS parameters for both VCs in the Class 4 circuit.

The QoSF receives the request from the CTI (S_ID = A and D_ID = hex 'FF FF F9'), validates it, sets up the path from the CTI to the CTR placing the Class 4 circuit in the Dormant State. It then sends a new request with the QoSF as the S_ID to the CTR (S_ID = hex 'FF FF F9' and D_ID = B).

If there is a conflict in parameters or insufficient resources, the request shall be rejected. If there is any error in the original transaction, the QoSF shall reject the request (see figure 45(b)).

General conditions associated with a Class 4 circuit are:

a) An N_Port may establish up to 254 coexistent Class 4 circuits, to the same or different N_Ports. The total bandwidth allocated shall not exceed the total bandwidth available for the N_Port media rate of the port managing the Class 4 circuits.
b) The bandwidth of any Class 4 circuit is restricted to the maximum bandwidth of the slowest link in the Class 4 circuit path.
c) Once setup by the Fabric, a Class 4 circuit is retained and guaranteed by the Fabric. This Fabric service guarantees the requested minimum bandwidth between the communicating N_Ports once the Class 4 circuit is activated.
d) The Quality of Service Request (QoSR) ELS shall be used by a CTI to provide its VC_ID (CIVC_ID) and identify the CTR along with QoS parameters.

The CTI actions are:

a) The CTI shall set the VC_Credit_Limit, VC_Credit, EE_C4_Credit_Limit, and EE_C4_Credit to zero before it sends the QoSR to the QoSF. The CTI shall enter the Pending State for the VC as it sends the QoSR to the QoSF.
b) The CTI shall release all resources assigned to the Class 4 circuit if an LS_RJT is received from the QoSF.

--`,,```,,,,````-`-`,,`,,`,`,,`---

Copyright International Organization for Standardization
Provided by IHS under license with ISO
No reproduction or networking permitted without license from IHS Not for Resale

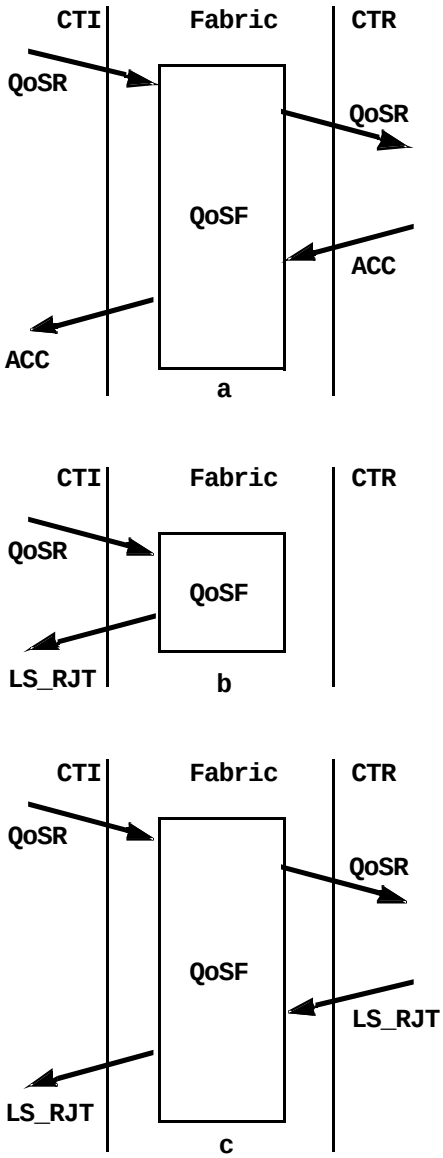


**Figure 45 - Class 4 circuit – Setup**

c) The CTI shall, when it recognizes the LS_ACC Sequence to the QoSR, set the Live_VC_Credit_Limit to the value obtained from the LS_ACC Sequence. The Originating N_Port shall also set the EE_C4_Credit_Limit and the EE_C4_Credit to the value obtained from the LS_ACC Sequence. CTI VC_Credit remains at zero until a VC_RDY is received on the new Class 4 circuit.
d) The CTI shall use the address identifier in the CTR address identifier field in the LS_ACC Sequence, as the D_ID for all Class 4 traffic on the new Class 4 circuit.

NOTE The CTR may elect to use any address identifier, Alias_ID or native, assigned to the CTR on the Class 4 circuit.

e) The CTI shall enter the Dormant State when it receives the first VC_RDY for the VC. It shall also set the VC_Credit_Limit to 1 and VC_Credit to 1 when the VC_RDY is received.

Copyright International Organization for Standardization
Provided by IHS under license with ISO
No reproduction or networking permitted without license from IHS Not for Resale

The CTR actions are:

a) The CTR shall enter the Pending State before it transmits a LS_ACC Sequence to the QoSR from the QoSF. Before the CTR transmits a LS_ACC Sequence the CTR shall:
   A) set the VC_Credit_Limit to zero;
   B) set the Live_VC_Credit_Limit to the value obtained from the QoSR Sequence;
   C) set the EE_C4_Credit_Limit to the value obtained from the QoSR Sequence;
   D) set the EE_C4_Credit to the value obtained from the QoSR Sequence; and
   E) set VC_Credit to zero.
b) If the CTR is unable to accept the QoSR from the QoSF it shall return an LS_RJT to the QoSF and enter the Nonexisting State.
c) The CTR shall use the address identifier in the CTI address identifier field in the QoSR Sequence, as the D_ID for all Class 4 traffic on the new Class 4 circuit.
   The CTI may elect to use any address identifier, Alias_ID or native, assigned to the CTI on the Class 4 circuit.
d) The CTR shall enter the Dormant State when it receives the first VC_RDY for the VC. It shall also set the VC_Credit_Limit to 1 and VC_Credit to 1 when the VC_RDY is received.

The QoSF actions are:

a) The QoSF shall set the F_Port, linked to the CTI, to the Pending State, once it recognizes the QoSR from the CTI.
b) The QoSF shall set the F_Port, linked to the CTI, to the Dormant State when it completes the QoSR transaction with the CTI. The QoSR transaction is complete in Class 1,2 or 4 when the QoSF receives the ACK to the LS_ACC Sequence, sent to the CTI. In Class 3 the QoSR transaction is complete when the QoSF transmits the LS_ACC Sequence. The F_Port shall transmit one or more VC_RDY when the F_Port enters the Dormant State.
c) The QoSF shall set the F_Port, linked to the CTR, to the Pending State, as it sends the QoSR to the CTR.
d) The QoSF shall set the F_Port, linked to the CTR, to the Dormant State when it completes the QoSR transaction with the CTI. The QoSR transaction is complete in Class 1,2 or 4 when the QoSF transmits the ACK to the LS_ACC Sequence, received from the CTR. In Class 3 the QoSR transaction is complete when the LS_ACC Sequence is transmitted by the CTR. The F_Port, linked to the CTR, shall transmit one or more VC_RDY when the F_Port enters the Dormant State.
e) The QoSF shall send the CTI an LS_RJT if an LS_RJT is received from the CTR.
f) The QoSF shall set the F_Port, linked to the CTR, to the Nonexisting State, once it recognizes the LS_RJT from the CTR.
g) The QoSF shall send the CTI an LS_RJT if it is unable to accept the CTIs QoSR request.
h) The QoSF shall set the F_Port, linked to the CTI, to the Nonexisting State, before it sends an LS_RJT to the CTI.
i) The QoSF shall send LS_ACC to the CTI only if a LS_ACC has been received from the CTR.
j) The QoSF shall remove the Class 4 circuit (see 25.3.5.5) if the QoSR transaction fails to complete.

The Class 4 circuit may be activated once it is setup (see 25.3.5.2).

### 25.3.5.3 Activation

A Class 4 circuit activation request is used to activate the two VCs for the Class 4 circuit after which Class 4 frames may be transmitted between the communicating N_Ports. Either N_Port may activate the Class 4 circuit. Once activated, the Class 4 circuit may be deactivated with a deactivation request or removed entirely with a removal request by either of the communicating N_Port.

A Class 4 circuit, in the Dormant State, is activated, enters the Live State, when a circuit activation request, an

--`,,```,,,,````-`-`,,`,,`,`,,`---

Copyright International Organization for Standardization
Provided by IHS under license with ISO
No reproduction or networking permitted without license from IHS Not for Resale

SOF$_{c4}$ delimited frame, is sent or received (see figure 46).

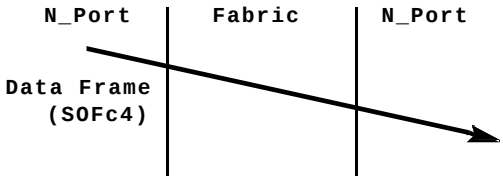


**Figure 46 - Class 4 circuit – Activation**

Bandwidth utilization is being monitored by the Fabric and is used to regulate VC_RDY transmission. Once the Class 4 circuit activation frame has been transmitted Class 4 frame flow is possible, only limited by available EE_C4_Credit and VC_Credit.

The Fabric manages buffer-to-buffer flow control and the Fabric regulates frame transmission from each source N_Port. The Fabric regulates each VC independently with the Virtual Circuit Ready (VC_RDY) Primitive Signal. Fabric flow control is accomplished using the VC_RDY Primitive Signal for each Live Class 4 circuit (see figure 47).

Class 4 end-to-end flow control is managed by the communicating N_Ports using ACK frames.

#### 25.3.5.4 Deactivation

Once a Class 4 circuit is setup, it may be activated and deactivated one or more times.

The Sequence Initiator indicates in the frame header, on the last frame of a Sequence, that the Live Class 4 circuit is to be deactivated (E_C = 1, R_C = 0) (see 25.4). The ACK response then carries the EOF$_{dt}$ delimiter (see figure 48).

The request to deactivate a Class 4 circuit may be sent by either of the communicating N_Ports.

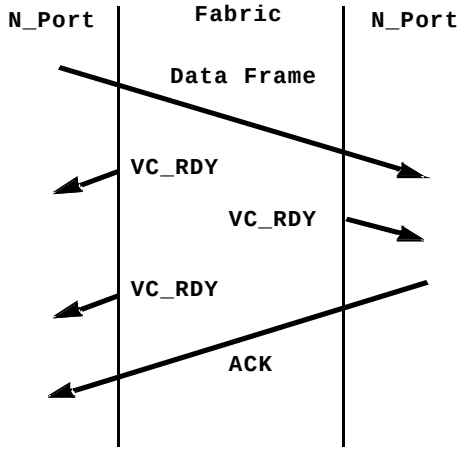


**Figure 47 - Class 4 - Example of frame flow**

Copyright International Organization for Standardization
Provided by IHS under license with ISO
No reproduction or networking permitted without license from IHS
Not for Resale

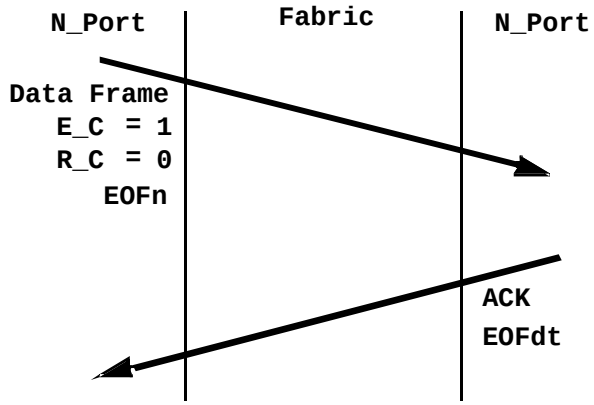


**Figure 48 - Class 4 circuit - CTI or CTR initiated**

A Class 4 circuit, in the Live State, is deactivated, and enters the Dormant State, when a circuit deactivation request, an $EOF_{dt}$ or $EOF_{dti}$ delimited frame, is sent or received (see figure 49).

A deactivated Class 4 circuit may later be reactivated to the Live State (see 25.3.5.2).

The Fabric shall issue two END Link_Control commands, one on either VC, when the QoSF determines for any reason that a Class 4 circuit should be deactivated. The Fabric shall use the addresses of the communicating N_Ports, as the S_ID and D_ID, in the generated END Link_Control commands, and the VC_ID shall match with the S_ID field. The END Link_Control command frame delimiters shall be $EOF_{dt}$ and $SOF_{n4}$ (see figure 49). The Fabric shall use this mechanism to deactivate Class 4 circuits when the N_Port or F_Port enters the Link Reset State.

When a Class 4 circuit is deactivated, an N_Port shall reclaim all EE_C4_Credit when the N_Port enters the Dormant State (i.e., set EE_C4_Credit equal to EE_C4_Credit_Limit when using the count down model for credit management).

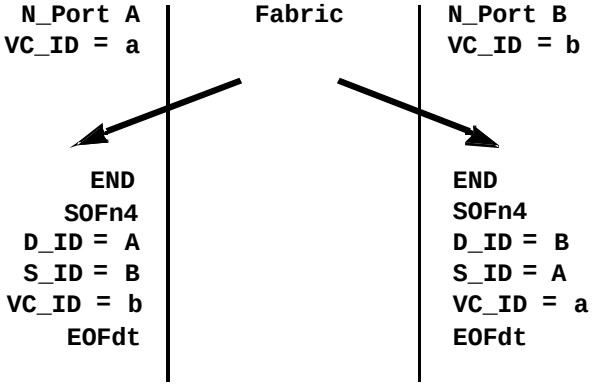


**Figure 49 - Class 4 circuit - Fabric initiated deactivation**

### 25.3.5.5 Removal

From the Live State, a Class 4 circuit may be removed (i.e., it may enter the Nonexisting State). The Sequence initiator indicates, in the frame header, on the last frame of a Sequence, that the Live Class 4 circuit is to be removed (E_C = 1, R_C = 1) (see 25.4). The ACK response then carries $EOF_{rt}$ delimiter (see figure 50).

Copyright International Organization for Standardization
Provided by IHS under license with ISO
No reproduction or networking permitted without license from IHS Not for Resale

The request to remove a live Class 4 circuit may be sent by either of the communicating N_Ports.

A Class 4 circuit, in the Live or Dormant State, is removed, and enters the Nonexisting State, when a circuit removal request, an EOFrt or EOFrti delimited frame, is received (see figure 49). A Class 4 circuit, in the Live State, is removed, and enters the Nonexisting State, when a circuit removal request, an EOFrt or EOFrti delimited frame, is sent (see figure 49).

The two N_Ports shall not reactivate the Class 4 circuit when the Class 4 circuit has been removed. However, the VC_IDs associated with the removed Class 4 circuit (CIVC_ID and CRVC_ID) may be reused. The QoSF shall return any resources it has allocated to a common pool for use by other live Class 4 circuits or other classes of service when the Class 4 circuit has been removed.

Another Class 4 circuit may be used for future Class 4 communication between the N_Ports or the two N_Ports may setup a new Class 4 circuit.

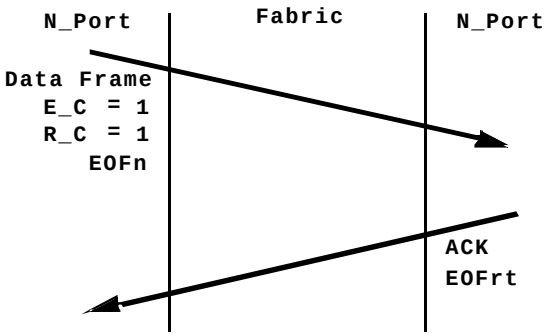


**Figure 50 - Class 4 circuit - CTI or CTR initiated removal**

If required for any reason, the Fabric may remove a Class 4 circuit from either the Live State or the Dormant State. To achieve this the Fabric shall issue two END Link_Control commands, one on either VC. The Fabric shall use the addresses of the communicating N_Ports, as the S_ID and D_ID, in the generated END Link_Control commands, and the VC_ID shall match with the S_ID field. The END Link_Control command frame delimiters shall be EOFrt and SOFn4 (see figure 51). If the Class 4 circuit is alive, then the Fabric shall first deactivate the Class 4 circuit before removing the circuit (see 25.3.5.4).

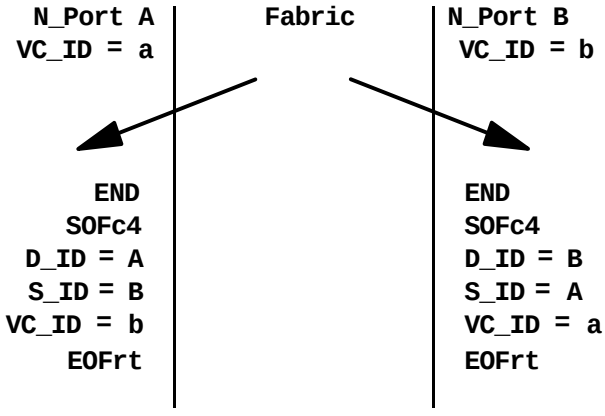


**Figure 51 - Class 4 circuit - Fabric initiated removal**

The Fabric shall use this mechanism to remove Class 4 circuits when:

a) Fabric Relogin is attempted,
b) N_Port or the F_Port enters the Offline State,

Copyright International Organization for Standardization
Provided by IHS under license with ISO
No reproduction or networking permitted without license from IHS Not for Resale

c) Link failure is detected at the N_Port,
d) error recovery for the setup process (see 25.3.5.2), or
e) internal Fabric failures of the Class 4 circuit path are detected (i.e., the Fabric is unable to provide the guaranteed quality of service).

An N_Port shall reclaim all EE_C4_Credit when the N_Port enters the Nonexisting State (i.e., set the EE_C4_Credit to the EE_C4_Credit_Limit limit when using the count down credit management model).

## 25.4 Deactivation, removal contention and error recovery

### 25.4.1 CTI has requested removal of Class 4 circuit

If a CTI has requested removal of a Class 4 circuit (i.e., set E_C = 1, R_C = 1 on the last Data frame transmitted) and this Data frame has not yet been acknowledged by the CTR, the CTI shall react as follows:

a) The CTI shall acknowledge Data frames received from the CTR on the Class 4 circuit. The EOF delimiter used on the ACK frames shall be either $EOF_n$ or $EOF_t$, preventing the CTI from responding to deactivation or removal requests from the CTR.
b) Requests to remove or deactivate the Class 4 circuit from the CTR shall be denied (see (a) above).
c) Data frame rejection (P_RJT) criteria for the CTI is unaffected by the Class 4 circuit removal request.
d) The CTI shall not transmit any Data frames on the Class 4 circuit until either an acknowledgment to the removal request frame has been received or until Sequence timeout is detected.
e) If Sequence timeout is detected, then the CTI may attempt Sequence recovery or it shall transmit an END Link_Control command to deactivate the Class 4 circuit, followed by an END Link_Control command to remove the circuit.

### 25.4.2 CTR has requested removal of a Class 4 circuit

If a CTR has requested removal of a Class 4 circuit (i.e., set E_C = 1, R_C = 1 on the last Data frame transmitted) and this Data frame has not yet been acknowledged by the CTI, the CTR shall react as follows:

a) The CTR shall acknowledge Data frames received form the CTI on the Class 4 circuit. The EOF delimiter used on the ACK frames shall be $EOF_n$, $EOF_t$ or $EOF_{rt}$.
b) Requests to deactivate the Class 4 circuit from the CTI shall be denied (see (a) above).
c) Requests to remove the Class 4 circuit from the CTI shall be accepted (see (a) above).
d) Data frame rejection (P_RJT) criteria for the CTR is unaffected by the Class 4 circuit removal request.
e) The CTR shall not transmit any Data frames on the Class 4 circuit until either an acknowledgment to the removal request frame has been received or until Sequence timeout is detected.
f) If Sequence timeout is detected, then the CTR may attempt Sequence recovery or it shall transmit an END Link_Control command to deactivate the Class 4 circuit, followed by an END Link_Control command to remove the circuit.

### 25.4.3 CTI has requested deactivaton of a Class 4 circuit

If a CTI has requested deactivation of a Class 4 circuit (i.e., set E_C = 1, R_C = 0 on the last Data frame transmitted) and this Data frame has not yet been acknowledged by the CTR, the CTI shall react as follows:

a) The CTI shall acknowledge Data frames received form the CTR on the Class 4 circuit. The EOF delimiter used on the ACK frames shall be either $EOF_n$, $EOF_t$ or $EOF_{rt}$, preventing the CTI to respond to deactivation request from the CTR but allowing the CTI to respond to removal request from the CTR.
b) Requests to deactivate the Class 4 circuit from the CTR shall be denied (see (a) above).
c) Requests to remove the Class 4 circuit from the CTR shall be accepted (see (a) above).
d) Data frame rejection (P_RJT) criteria for the CTI is unaffected by the Class 4 circuit deactivation request.
e) The CTI shall not transmit any Data frames on the Class 4 circuit until either an acknowledgment to the deactivation request frame has been received or until Sequence timeout is detected.

Copyright International Organization for Standardization
Provided by IHS under license with ISO
No reproduction or networking permitted without license from IHS Not for Resale

f) If Sequence timeout is detected, then the CTI may attempt Sequence recovery or it may transmit an END Link_Control command to deactivate the Class 4 circuit.

#### 25.4.4 CTR has requested deactivaton of a Class 4 circuit

If a CTR has requested deactivation of a Class 4 circuit (i.e., set E_C = 1, R_C = 0 on the last Data frame transmitted) and this Data frame has not yet been acknowledged by the CTI, the CTR shall react as follows:

a) The CTR shall acknowledge Data frames received from the CTI on the Class 4 circuit. The EOF delimiter used on the ACK frames shall be $EOF_n$, $EOF_t$, $EOF_{dt}$ or $EOF_{rt}$, enabling the CTR to respond to both deactivation and removal requests from the CTI.
b) Requests to deactivate or remove the Class 4 circuit from the CTI shall be accepted (see (a) above).
c) Data frame rejection (P_RJT) criteria for the CTR is unaffected by the Class 4 circuit removal request.
d) The CTR shall not transmit any Data frames on the Class 4 circuit until either an ACK frame to the deactivation request frame has been received or until Sequence timeout is detected.
e) If Sequence timeout is detected, then the CTR may attempt Sequence recovery or it shall transmit an END Link_Control command to deactivate the Class 4 circuit, followed by an END Link_Control command to remove the circuit.

#### 25.4.5 CTI has no outstanding removal or deactivation request

If a CTI has no outstanding deactivation or removal request, the CTI shall react as follows:

a) The CTI shall acknowledge Data frames received from the CTR on the Class 4 circuit. The EOF delimiter used on the ACK frames shall be $EOF_n$, $EOF_t$, $EOF_{dt}$ or $EOF_{rt}$, enabling the CTI to respond to both deactivation and removal requests from the CTR.
b) Requests to deactivate or remove the Class 4 circuit from the CTR may be accepted (see (a) above).

#### 25.4.6 CTR has no outstanding removal or deactivation request

If a CTR has no outstanding deactivation or removal request, the CTR shall react as follows:

a) The CTR shall acknowledge Data frames received from the CTI on the Class 4 circuit. The EOF delimiter used on the ACK frames shall be $EOF_n$, $EOF_t$, $EOF_{dt}$ or $EOF_{rt}$, enabling the CTR to respond to both deactivation and removal requests from the CTI.
b) Requests to deactivate or remove the Class 4 circuit from the CTI may be accepted (see (a) above).

## 25.5 Ordered Sets

Class 4 frame delimiter usage for Data and Link_Control frames is shown in table 260.

**Table 260 - Frame delimiter usage**

| Frame Types | Delimiters |
|---|---|
| Data | $SOF_{c4}$, $SOF_{i4}$, $SOF_{n4}$, $EOF_n$ |
| Link_Control | $SOF_{c4}$, $SOF_{n4}$, $EOF_n$, $EOF_t$, $EOF_{dt}$, $EOF_{rt}$ |

A Class 4 circuit in the Dormant State is activated to Live State by using an $SOF_{c4}$ delimiter for the first frame of a Sequence.

The frames that initiate a Sequence while the Class 4 circuit is in the Live State shall begin with an $SOF_{i4}$ delimiter.

Copyright International Organization for Standardization
Provided by IHS under license with ISO
No reproduction or networking permitted without license from IHS Not for Resale

All other frames for a Class 4 circuit in the Live State shall begin with an SOFn4 delimiter.

An N_Port shall only transmit a SOFc4 delimited frame if the Class 4 circuit is in the Dormant State. N_Ports shall discard SOFc4 delimited frames received for Class 4 circuits in the Nonexisting or Pending State. Any SOFc4 delimited frames received by an N_Port for a Class 4 circuit in the Dormant or Live State shall qualify for further processing by the N_Port.

The END Link_Control command is the only Link_Control frame that shall make use of the SOFc4 delimiter.

If the Class 4 circuit is not in the Live State the Port shall discard any SOFi4 delimited frame received.

If the Class 4 circuit is not in the Live State the Port shall discard any SOFn4 delimited frame received.

Interaction with the Fabric and the destination N_Port are shown in figure 52:

a) Figure 52 (a) shows all possible responses to a SOFc4 delimited Data frame, in the absence of errors.
b) Figure 52 (b) shows all possible responses to a SOFi4 delimited Data frame, in the absence of errors.
c) Figure 52 (c) shows all possible responses to a SOFn4 delimited Data frame, in the absence of errors

--`,,```,,,,````-`-`,,`,,`,`,,`---

Copyright International Organization for Standardization
Provided by IHS under license with ISO
No reproduction or networking permitted without license from IHS Not for Resale

.

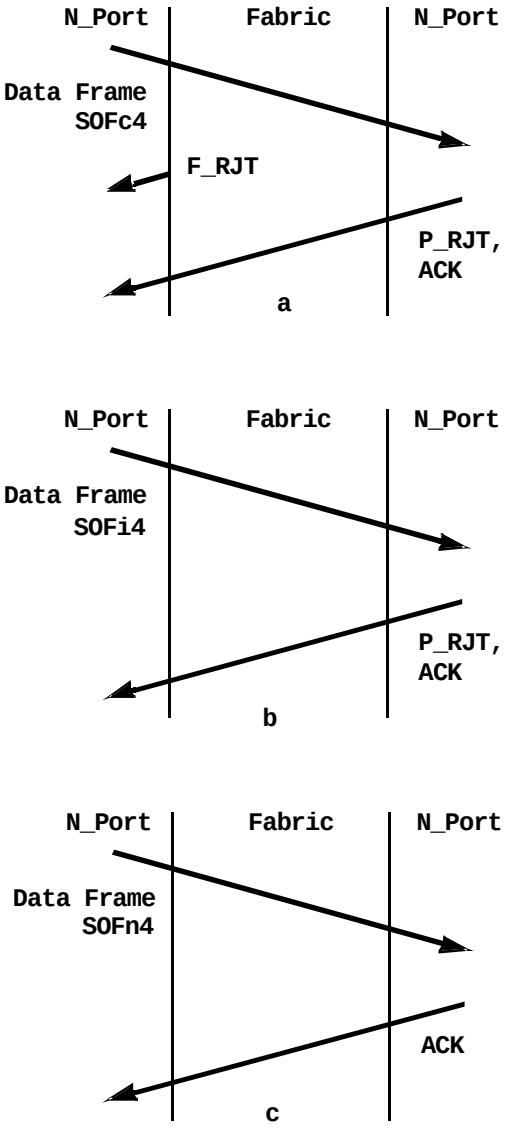


**Figure 52 - Class 4 circuit - Data frame responses**

## 25.6 Quality of Service

Class 4 through the QoSF, guarantees that the minimum bandwidth is available to the communicating N_Ports in a Class 4 circuit. Some applications may cause the communicating N_Ports not to use all of that guaranteed bandwidth, but the Fabric shall offer the guaranteed bandwidth to each N_Port for each Live Class 4 circuit.

The measure of effectiveness of Class 4 in meeting its goal of guaranteed bandwidth may only be measured for a Fabric with consideration for the participating N_Ports. The measure of effectiveness may only be obtained indirectly by the VC_RDY Primitive Signals transmitted to the participating N_Ports. The bandwidth utilization for a VC is also a function of the available EE_C4_Credit and the ability of the participating ports to sustain the negotiated bandwidth.

The Fabric shall guarantee a worst case end-to-end delay for each frame once it enters the Fabric.

To help establish a frame rate associated with a calculation of the negotiated bandwidth, the Quality of Service ELS

Copyright International Organization for Standardization
Provided by IHS under license with ISO
No reproduction or networking permitted without license from IHS Not for Resale

requests permit the N_Ports to negotiate a maximum frame Data Field size that is equal to or smaller than the current allowable maximum between the communicating N_Ports specifically for Class 4. The maximum value is determined during Fabric and N_Port Login.

All QoS parameters are independently negotiated through the QoSF for each VC. This permits an asymmetric allocation of resources. These parameters include:

a) Bandwidth range
b) Worst case end-to-end delay for a frame for fractional bandwidth mode
c) VC Data Field size.

For the first parameter there are two levels of negotiation. The requested QOS and the acceptable quality of service (Acceptable QoS).

The Acceptable QoS is guaranteed if the Class 4 circuit is setup. The requested QoS may be attempted, but is not guaranteed. When applied to the list above, the negotiable parameters become:

a) Desirable Bandwidth
b) Acceptable Bandwidth
c) Acceptable Worst case end-to-end delay for a frame
d) VC Data Field size.

The VC Data Field size is not a variable quantity since it represents the maximum Data Field size that an FC-2 may generate for each frame for Class 4 and is not controllable by the Fabric.

The negotiation for QoS is accomplished using QoSR ELSs (see 12.3.2.38).

Each request is handled in two stages: CTI to QoSF and QoSF to CTR. This process is illustrated in the specification of the QoSR link service request.

a) If the QoSF is unable to perform the function for the Class 4 circuit (e.g., too much bandwidth requested versus that available at the time of the request) the QoSF shall send a LS_RJT response to the CTI with an appropriate reason code.
b) If the CTR is unable to perform the function for the Class 4 circuit (e.g., too much bandwidth requested versus that available at the time of the request) the CTR shall send an LS_RJT to the CTI to inform it of the rejection and the reason for it.

Copyright International Organization for Standardization
Provided by IHS under license with ISO
No reproduction or networking permitted without license from IHS Not for Resale

# 26 Stacked Connect-request

## 26.1 Introduction

The ability to support Stacked Connect-request is indicated by a Fabric during the Fabric Login procedure and may be invoked by an Nx_Port through the CS_CTL Stacked Connect-request bit of the connect-request frame on a connection by connection basis. If priority/preemption is enabled and Stacked Connect-request is indicated by the Fabric during Login Stacked Connect-request shall be used for all connections through the Fabric. The CR_TOV timer used by the Connection Initiator, the Connection Recipient, and the Fabric to time the connection establishment procedure.

NOTE No new delimiters are required.

## 26.2 FC-2 Mechanisms

The FC-2 mechanisms used for this function are:

a) Stacked Connect-request
b) Class Specific Control field (CS_CTL)
c) CR_TOV: Connection request time out value.

## 26.3 Applicability

The Stacked Connect-request is an optional function. If this function is invoked, the use of the CR_TOV is mandatory.

Stacked Connect-request is applicable to Class 1 and 6 dedicated connections.

## 26.4 Communications Model

The ability of the Fabric to support Stacked Connect-request is indicated during the Fabric Login procedure through the service parameters supplied by the Fabric. The Stacked Connect-request function is invoked by the Connection Initiator through the Stacked Connect-request CS_CTL bit in the Frame_Header of the connect-request frame. The Stacked Connect-request function is invoked on a connection by connection basis under control of the Connection Initiator.

## 26.5 Requirements

### 26.5.1 Connection Initiator

The Connection Initiator shall support:

a) Class 1 and 6
b) Stacked Connect-request CS_CTL bit
c) CR_TOV timer.
d) Stacked Connect-request in Login

### 26.5.2 Connection Recipient

The Connection Recipient shall support:

a) Class 1 and 6
b) CR_TOV timer.

Copyright International Organization for Standardization
Provided by IHS under license with ISO
No reproduction or networking permitted without license from IHS Not for Resale

### 26.5.3 Fabric

The Fabric shall support

a) Class 1 and 6
b) Stacked Connect-request CS_CTL bit
c) CR_TOV timer.
d) Stacked Connect-request in Login

## 26.6 Login

The ability to support the Stacked Connect-request function by the Fabric is indicated during Fabric Login in the Fx_Port Class Service parameters. The Nx_Port service parameters interchanged during Fabric Login for the Stacked Connect-request function are not used.

## 26.7 Stacked Connect-request Invoked

The Connection Initiator shall invoke the Stacked Connect-request function on a connection by connection basis. To invoke Stacked Connect-request, the Connection Initiator shall transmit a connect-request frame containing the $SOF_{c1}$ delimiter and setting the CS_CTL Stacked Connect-request to one. If Stacked Connect-request is set to zero on a connect-request frame, the Stacked Connect-request function is not invoked.

## 26.8 Timer

### 26.8.1 General

Stacked Connect-request utilizes both the CR_TOV timer and the E_D_TOV timer.

### 26.8.2 CR_TOV

The CR_TOV timer shall be used by the Fabric to define the maximum time period that the Fabric shall hold a connect-request frame when Stacked Connect-request is invoked and the destination Nx_Port is engaged in a prior connect. The Fabric shall attempt to establish the requested connection within the CR_TOV time out period. If the CR_TOV timer expires before the Fabric transmits the connect-request to the destination Nx_Port, the Fabric shall discard the connect-request and transmit a F_BSY to the source Nx_Port.

### 26.8.3 E_D_TOV

The E_D_TOV timer shall be used by the Fabric to define the maximum time period that the Fabric may hold a connect-request when Stacked Connect-request is not invoked.

## 26.9 Rules

### 26.9.1 Connection Initiator

To invoke Stacked Connect-request, the Connection Initiator shall transmit a connect-request frame containing the $SOF_{c1}$ delimiter and setting the CS_CTL Stacked Connect-request to one.

If the Fabric indicated support for Stacked Connect-request in Fabric Login (see 15.6.5.4.3), the Connection Initiator shall wait a time out period as specified in 21.2.6.6.

### 26.9.2 Connection Recipient

The Connection Recipient shall wait a time out period as specified in.21.2.6.6.

--`,,```,,,,````-`-`,,`,,`,`,,`---

Copyright International Organization for Standardization
Provided by IHS under license with ISO
No reproduction or networking permitted without license from IHS Not for Resale

### 26.9.3 Fabric

If a Fabric received a connect-request frame with the Stacked Connect-request CS_CTL bit 30 to one, it shall invoke the rules for the Stacked Connect-request mode indicated in its service parameters during Fabric Login (see 15.6.5.4.3).

The Fabric shall manage CR_TOV timer as specified in 21.2.6.6.

--`,,```,,,,````-`-`,,`,,`,`,,`---

Copyright International Organization for Standardization
Provided by IHS under license with ISO
No reproduction or networking permitted without license from IHS Not for Resale

# 27 Clock synchronization service

## 27.1 Introduction

### 27.1.1 References

See Informative Annex H for implementation details related to Clock Synchronization.

### 27.1.2 Applicability

Conventional network technologies utilize clock distribution protocols (e.g., Network Time Protocol) that synchronize the computer's time-of-day clock. Such protocols typically provide clock synchronization accuracies on the order of a few milliseconds with highly tuned versions producing accuracies on the order of 50 µs.

The protocols defined in this clause allow clocks located within Nx_Ports to be readily synchronized to microsecond accuracies. If all sources of error are accounted for, higher accuracies are possible.

### 27.1.3 Function

Clock Synchronization over Fibre Channel is attained through a Clock Synchronization Server that contains a reference clock. The Server synchronizes Client's clocks to the reference clock on a periodic basis using either Primitive Signals or ELS frames. The Server may be built into a fabric or it may be implemented as an independent node that services one or more Nx_Ports in either a Fabric or an Arbitrated Loop topology.

When all the Clients are synchronized with the Server, they shall be synchronized with each other. By tagging data with the current value of their synchronized clock, one client may accurately exchange time sensitive data with another client.

### 27.1.4 Assumptions

A simplifying assumption in both the ELS and Primitive methods is that propagation delays over the medium are insignificant. This eliminates the need for the Server to calculate and maintain the media delay to each Client.

Very accurate clock synchronization is accomplished without the use of media propagation delays through the techniques described in this clause. If the system requires even greater accuracy, "canned" propagation delays could be added in the Client's software or hardware. This and other sources of error are discussed in Annex H.

### 27.1.5 Clock Synchronization Quality of Service

Certain performance (Quality of Service) parameters are made available to the Clients by the Clock Synchronization Server and the fabric. This information is made available via FLOGI/PLOGI and/or the Clock Synchronization Request (CSR) ELS Command. The Quality of Service parameters include the accuracy of the Clock Count value, the implemented MSB and LSB, and the update period. These parameters are described in 15.6.9 and 27.2.4.2.

## 27.2 ELS Command Service

### 27.2.1 ELS Commands

The format for the Clock Synchronization Request (CSR) and Clock Synchronization Update (CSU) commands are defined in 12.3.2.44 and 12.3.2.45, respectively.

Copyright International Organization for Standardization
Provided by IHS under license with ISO
No reproduction or networking permitted without license from IHS Not for Resale

### 27.2.2 Fabric Topology

#### 27.2.2.1 Model

The basic Model of the ELS method in a Fabric is shown in figure 53.

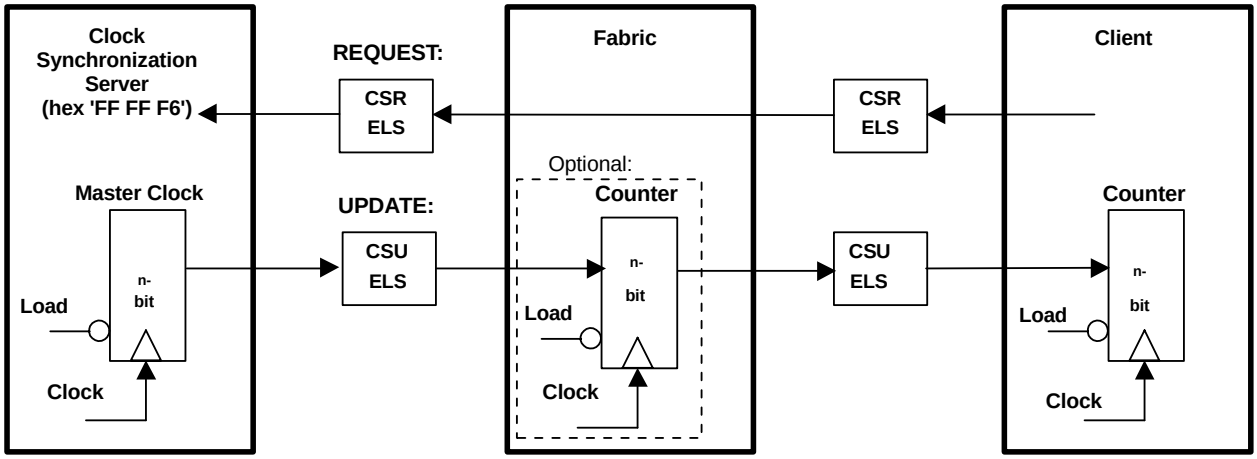


**Figure 53 - ELS Clock Sync Model – Fabric**

#### 27.2.2.2 Clock Synchronization Server Rules

The Clock Synchronization Server (hex ’FF FF F6’) shall have an n-bit binary counter. This counter shall act as the Master Clock to the Clients.

The Server shall periodically issue the Clock Synchronization Update (CSU) ELS command to the Clients. When a CSU command is sent, the Server shall place the current value of the Master Clock in the Payload.

The Server shall support at least one method for providing its Clock Synchronization Quality of Service capabilities to Clients. The available methods are N_Port Login and the Clock Synchronization Request (CSR) ELS command. The Server shall provide Clock Synchronization to Clients with the Quality of Service indicated in the N_Port Login LS_ACC Payload or the CSR ELS LS_ACC Payload.

The Clock Synchronization ELS Capable bit in the Initiator Control section of the Nx_Port Class Service Parameters shall be used to indicate whether the Server is capable of providing Clock Synchronization to Clients.

#### 27.2.2.3 Fabric Rules

When a CSU is received from the Server, the Fabric shall transmit the clock value contained in the Payload to the D_ID specified in the header.

The Fabric shall support at least one method for providing its Clock Synchronization Quality of Service capabilities to Clients. The available methods are Fabric Login and the Clock Synchronization Request (CSR) ELS command. The Fabric shall provide Clock Synchronization to Clients with the Quality of Service indicated in the Fabric Login LS_ACC Payload or the CSR ELS LS_ACC Payload.

The Clock Synchronization ELS Capable bit in the Recipient Control section of the Fabric Class Service Parameters shall be used to indicate whether the Fabric is capable of transferring CSU ELS frames from the Server to the Clients.

Copyright International Organization for Standardization
Provided by IHS under license with ISO
No reproduction or networking permitted without license from IHS Not for Resale

#### 27.2.2.4 Fabric Options

A Fabric may have its own n-bit binary counter as shown in figure 53. If this is done, the Fabric shall load its counter with the value in the Payload of the incoming CSU command, regardless of the content of the D_ID field of the header. The Fabric shall then place the current value of its counter in the Payload of the outgoing CSU command and update the CRC value. All other elements of the outgoing CSU frame shall be the same as in the incoming CSU frame.

#### 27.2.2.5 Client Rules

A Client shall have an n-bit binary counter.

When a CSU is received, the Client shall load its counter with the incoming value in the Payload of the CSU command.

The Clock Synchronization ELS Capable bit in the Recipient Control section of the Class Service Parameters shall be used to indicate whether the Client is capable of receiving CSU ELS frames.

#### 27.2.2.6 Client Options

Clients have the option of requesting particular Quality of Service parameters to the Server and the Fabric via Login or the CSR ELS command. However, the Server and Fabric may or may not be able to provide the Quality of Service requested.

### 27.2.3 Loop Topology

#### 27.2.3.1 Model

The basic Model of the ELS method in a Loop is shown in figure 54.

#### 27.2.3.2 L_Port Server Rules

The Clock Synchronization Server shall have an n-bit binary counter. This counter shall act as the Master Clock to the Clients.

The Server shall periodically issue the Clock Synchronization Update (CSU) ELS command to the Clients. When a CSU command is sent, the Server shall place the current value of the Master Clock in the Payload.

The Server shall support at least one method for providing its Clock Synchronization Quality of Service capabilities to Clients. The available methods are N_Port Login and the Clock Synchronization Request (CSR) ELS command. The Server shall provide Clock Synchronization to Clients with the Quality of Service indicated in the N_Port Login LS_ACC Payload or the CSR ELS LS_ACC Payload.

The Clock Synchronization ELS Capable bit in the Initiator Control section of the PLOGI Class Service Parameters shall be used to indicate whether the Server is capable of providing Clock Synchronization to Clients.

Copyright International Organization for Standardization
Provided by IHS under license with ISO
No reproduction or networking permitted without license from IHS Not for Resale

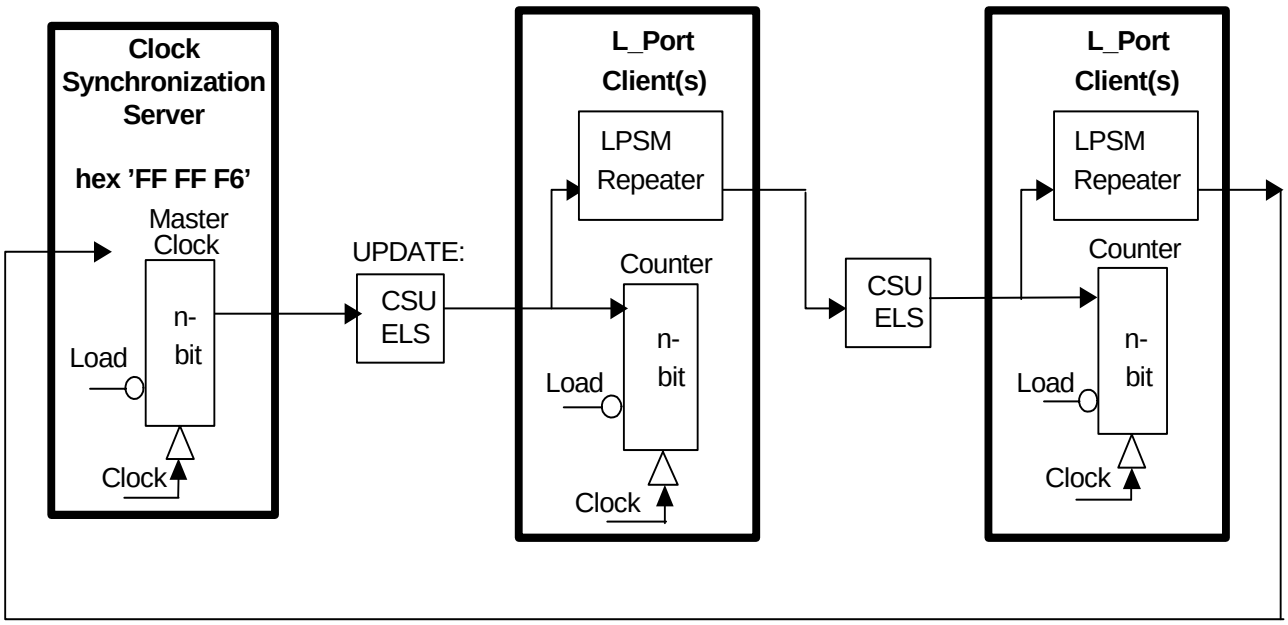


**Figure 54 - ELS Clock Sync Model – Loop**

#### 27.2.3.3 L_Port Server Options

Depending on the implementation, the Server may receive the Clock Synchronization Request (CSR) ELS command from Clients to initiate Clock Sync Service. The format of the CSR command is defined in 12.3.2.44.3. When the Server accepts the CSR command, it shall notify the Client that Clock Sync Service is enabled.

Although N_Port or Fabric Login is not required to use the CSR or CSU commands, if Login is used the Clock Sync Capable bit in the Class Specific Login Service Parameters shall be used to indicate whether the server is capable of supporting Clock Synchronization.

#### 27.2.3.4 L_Port Client Rules

A Client shall have an n-bit binary counter.

When a CSU is received, the Client shall load its counter with the incoming value in the Payload of the CSU command.

The Clock Synchronization ELS Capable bit in the Recipient Control section of the PLOGI Class Service Parameters shall be used to indicate whether the Client is capable of receiving CSU ELS frames.

#### 27.2.3.5 Client Options

Clients have the option of requesting particular Quality of Service parameters to the Server via Login or the CSR ELS command. However, the Server may or may not be able to provide the Quality of Service requested.

### 27.2.4 Use of FC-FS Constructs

#### 27.2.4.1 Login/Logout

A Client does not need to log in with the Clock Sync Server in order to receive Clock Sync Updates using the ELS method. Neither the CSR nor CSU ELS commands requires Login.

Copyright International Organization for Standardization
Provided by IHS under license with ISO
No reproduction or networking permitted without license from IHS Not for Resale

### 27.2.4.2 Clock Synchronization Request (CSR) ELS

#### 27.2.4.2.1 Command Payload

The format of the CSR command Payload shall be as shown in table 261.

**Table 261 - CSR Payload**

| Bits / Word | 31 .. 24 | 23 .. 16 | 15 .. 08 | 07 .. 00 |
|---|---|---|---|---|
| **0** | CSR (hex ’68’) | hex ’00’ | hex ’00’ | hex ’00’ |
| **1** | Clock Sync Mode | CS_Accuracy | CS_Implemented_MSB | CS_Implemented_LSB |
| **3** | CS_Update_Period | | | |

e) Clock Sync Mode
The meaning of the Clock Sync Mode byte in the CSR Payload is defined in table 262.

**Table 262 - CSR Clock Sync Mode Meaning**

| Value | When sent to the Clock Sync Server | When sent to the Fabric Controller |
|---|---|---|
| hex ’00’ | Enable clock synchronization service to this client. The CS_Accuracy, CS_Implemented_MSB, CS_Implemented_LSB, and CS_Update_Period fields are not meaningful in the CSR Request. | Return Quality of Service parameters. The CS_Accuracy, CS_Implemented_MSB, CS_Implemented_LSB, and CS_Update_Period fields are not meaningful in the CSR Request. |
| hex ’01’ | Enable clock synchronization service to this client. The CS_Accuracy, CS_Implemented_MSB, CS_Implemented_LSB, and CS_Update_Period fields contain the requested Quality of Service parameters. | Return Quality of Service parameters. The CS_Accuracy, CS_Implemented_MSB, CS_Implemented_LSB, and CS_Update_Period fields contain the requested Quality of Service parameters. |
| hex ’02’ – ’FE’ | Reserved | Reserved |
| hex ’FF’ | Disable clock synchronization service to this client | Reserved |

f) CS_Accuracy (Mantissa and Exponent)
This field contains the CS_Accuracy_Mantissa (Bits 23 to 21) and CS_Accuracy_Exponent (Bits 20 to 16). These bits indicate the requested accuracy of the clock synchronization value as it leaves the server port. Specifically, the request is that the Clock Count value is always within the range of:

$T_reference \pm (0.5 + CS_Accuracy_Mantissa \times 2^{-4}) \times 2^{(CS_Accuracy_Exponent-30)}$,

where
A) T_reference is the clock reference value internal to the server
B) CS_Accuracy_Mantissa is a value from '000’ b to '111’ b
C) CS_Accuracy_Exponent is a value from '00000’ b to '11111’ b
Example #1, if CS_Accuracy Mantissa and Exponent = ’001’ b and ’01011’ b, respectively, the Clock Synchronization value as it exits the server is requested to be within the range of:

Copyright International Organization for Standardization
Provided by IHS under license with ISO
No reproduction or networking permitted without license from IHS Not for Resale

T_reference ± 1,073 μs

Example #2, if CS_Accuracy Mantissa and Exponent = ’111’ b and ’11000’ b, respectively, the Clock Synchronization value as it exits the server is requested to be within the range of:

T_reference ± 14,65 msec

g) CS_Implemented_MSB
This field is a value that is constrained to the range of 0 to 63. These bits indicate the requested most significant bit position within the 64-bit Clock Count field (e.g., a value of '110111b' indicates that the client requests that the highest bit that contains meaningful information be the MSB of byte 1 of the Clock Count field).

h) CS_Implemented_LSB
This field is a value that is constrained to the range of 0 to 63. These bits indicate the requested least significant bit position within the 64-bit Clock Count field (e.g., a value of '001000’ b indicates that the client requests that the lowest bit that contains meaningful information be the LSB of byte 6 of the Clock Count field).

i) CS_Update_Period
This field is a value. It represents the requested time, in microseconds, between consecutive updates from the Clock Synchronization server.

#### 27.2.4.2.2 LS_ACC Payload

The format of the CSR ELS LS_ACC Payload shall be as shown in table 263.

**Table 263 - CSR LS_ACC Payload**

| Bits / Word | 31 .. 24 | 23 .. 16 | 15 .. 08 | 07 .. 00 |
|---|---|---|---|---|
| **0** | hex ’02’ | hex ’00’ | hex ’00’ | hex ’00’ |
| **1** | Clock Sync Mode | CS_Accuracy | CS_Implemented_MSB | CS_Implemented_LSB |
| **2** | CS_Update_Period | | | |

a) Clock Sync Mode
The meaning of the Clock Sync Mode byte in the CSR Payload is defined in table 264.

**Table 264 - CSU Clock Sync Mode Meaning**

| Hex Value | Meaning |
|---|---|
| hex '00' | Clock synchronization service enabled to this client |
| hex ’01 to hex ’FE’ | Reserved |
| hex 'FF' | Clock synchronization service disabled to this client |

b) CS_Accuracy (Mantissa and Exponent)
This field consists of two values, CS_Accuracy_Mantissa (Bits 23 to 21) and CS_Accuracy_Exponent (Bits 20 to 16).
These bits indicate the accuracy of the clock synchronization value as it leaves the server port. Specifically, the server shall supply a CS_Accuracy value such that the Clock Count value is always within the range of:
$T_reference \pm (0.5 + CS_Accuracy_Mantissa \times 2^{-4}) \times 2^{(CS_Accuracy_Exponent-30)}$,
where

Copyright International Organization for Standardization
Provided by IHS under license with ISO
No reproduction or networking permitted without license from IHS Not for Resale

A) T_reference is the clock reference value internal to the server
B) CS_Accuracy_Mantissa is a value from '000' b to '111' b
C) CS_Accuracy_Exponent is a value from '00000' b to '11111' b

Example #1, if CS_Accuracy Mantissa and Exponent = '001' b and '01011' b, respectively, the Clock Synchronization value as it exits the server shall always be within the range of:

T_reference ± 1,073 μs

Example #2, if CS_Accuracy Mantissa and Exponent = '111' b and '11000' b, respectively, the Clock Synchronization value as it exits the server shall always be within the range of:

T_reference ± 14,65 ms

c) CS_Implemented_MSB
This field is a value that is constrained to the range of 0 to 63. It represents the most significant bit position within the Clock Count field that shall contain meaningful information (e.g., a value of '110111' b indicates that the MSB of byte 1 of the Clock Count field is the highest bit that contains meaningful information).
d) CS_Implemented_LSB
This field is a value that is constrained to the range of 0 to 63. It represents the least significant bit position within the Clock Count field that shall contain meaningful information (e.g., a value of '001000' b indicates that the LSB of byte 6 of the Clock Count field is the lowest bit that contains meaningful information).
e) CS_Update_Period
This field is a value. It represents the time, in microseconds, between consecutive updates from the Clock Synchronization server.

#### 27.2.4.3 Clock Synchronization Update (CSU) ELS Command

The format of the CSU ELS command Payload shall be as shown in table 265. There is no reply to the CSU ELS Clock Count.

**Table 265 - CSU Payload**

| Bits / Word | 31 .. 24 | 23 .. 16 | 15 .. 08 | 07 .. 00 |
|---|---|---|---|---|
| **0** | CSU (hex '69') | Reserved | | |
| **1** | Clock Count (8 bytes) | | | |
| **2** | | | | |

--`,,```,,,,````-`-`,,`,,`,`,,`---

Copyright International Organization for Standardization
Provided by IHS under license with ISO
No reproduction or networking permitted without license from IHS Not for Resale

The meaning of the Clock Count field is given in table 266.

**Table 266 - Clock Count Field Meaning**

| Byte Number | Meaning |
|---|---|
| 0 | Counter value, byte 0 (MSB) |
| 1 | Counter value, byte 1 |
| 2 | Counter value, byte 2 |
| 3 | Counter value, byte 3 |
| 4 | Counter value, byte 4 |
| 5 | Counter value, byte 5 |
| 6 | Counter value, byte 6 |
| 7 | Counter value, byte 7 (LSB) |

The bit values are derived from clock frequencies that are used in 1Gbits/s Fibre Channel and shall be defined as follows. The value of the Bit 7 in Word 2 shall be equal to 1/106,25MHz, roughly 9,4 ns. Every other bit value is a binary multiple of this value. The next most significant bit is 2x that value, or 18,8ns. The next least significant value is ½ that value, or 4.7ns. The overall least significant bit is 73,5ps. The overall range that may be represented is $1,36 \times 10^9$ sec, approximately equal to 43 years.

The Clock Count value shall represent the time at which the most significant bit was placed on the link by the CSU ELS originator.

Any bits outside the range of CS_Implemented_MSB to CS_Implemented_LSB shall be set to zero. This applies to both the Clock Sync Server and to the Fabric.

## 27.3 Primitive Signal Service

### 27.3.1 Topology compatibility

Primitive Signal Service for Clock Synchronization is compatible with all topologies, point-to-point, arbitrated loop, and fabric based networks.

### 27.3.2 Communication Model

Figure 55 illustrates the protocol for synchronizing client's real-time clocks with a clock synchronization server real-time clock. To accomplish this the server periodically generates a synchronization event. The synchronization event is the transfer of clock synchronization primitives from the server to the Clients with the period between synchronization events controlled by the Server. Embedded within the clock synchronization primitives is the necessary data to update the client's real-time clock. For the client to receive an accurate real-time clock update in a fabric based network the fabric shall, to the degree required by the application(s) of interest, compensate for the delay of moving the real-time clock value from the server to the clients.

Copyright International Organization for Standardization
Provided by IHS under license with ISO
No reproduction or networking permitted without license from IHS Not for Resale

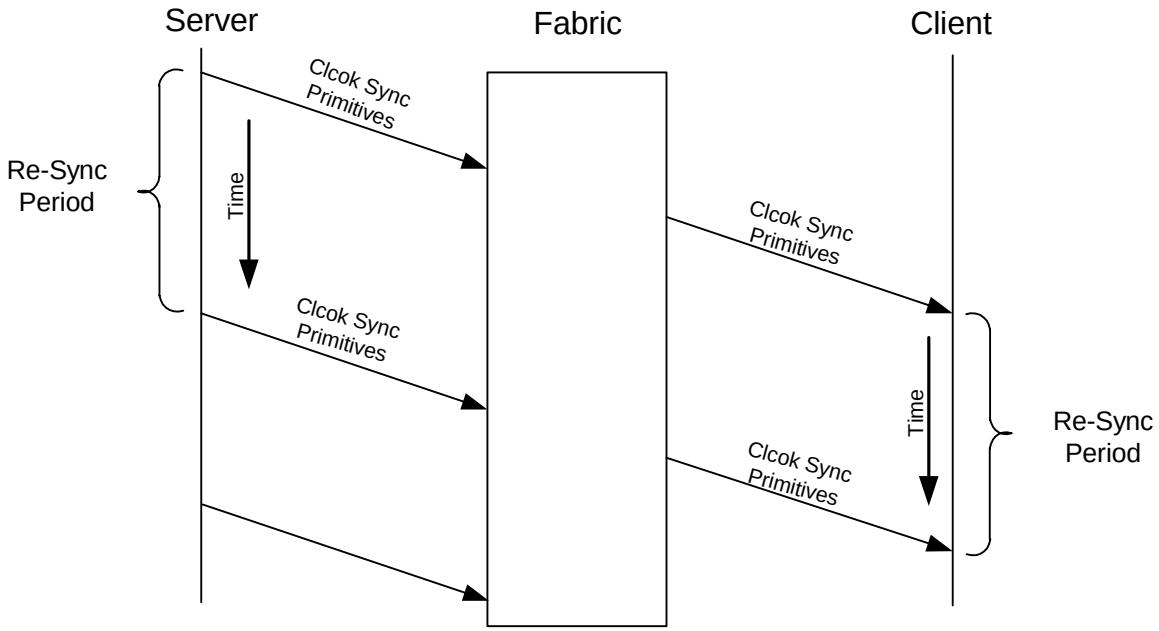


**Figure 55 - Clock Synchronization Data Distribution**

### 27.3.3 Requirements

#### 27.3.3.1 Introduction

The Clock Synchronization Server shall initiate clock synchronization events by substituting three synchronization primitives for a sequence of three consecutive IDLE primitives in the inter-frame interval, as shown in figure 56. This shall be done in such a way as to insure that the synchronization symbols are bracketed at both ends by at least two IDLE primitives.

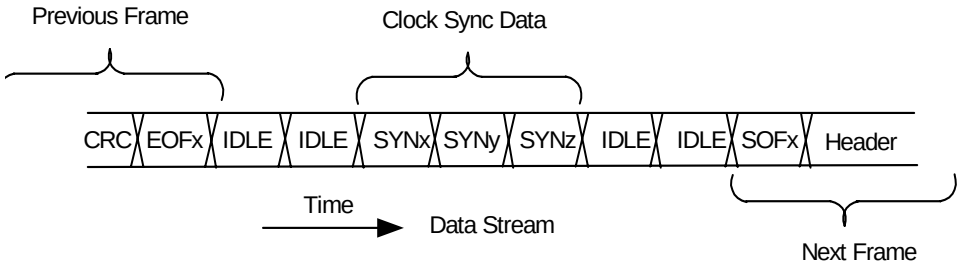


**Figure 56 - Synchronization Primitive Substitution for IDLE Primitives in Inter-frame Interval**

Clock synchronization primitives shall consist of the Ordered Sets shown in figure 57. The 14-bit values contained within each primitive (SYNx, SYNy, and SYNz) are the concatenation of two 7-bit values (X and X', Y and Y', Z and Z' respectively). Each 7-bit value shall have an equivalent neutral disparity data character (CS_X and CS_X', CS_Y and CS_Y', CS_Z and CS_Z') as shown in table 267. The 42-bit time sync value shall be the concatenation of these neutral disparity data characters such that the most significant 7-bits is represented by CS_X and the least significant 7-bits is represented by CS_Z'. The 42-bit value is CS_X CS_X' CS_Y CS_Y' CS_Z CS_Z'. Neutral disparity data characters shall be selected such that their decimal value is equal to the binary value being transmitted (i.e., if transmitting a value of '1111111' b select neutral disparity data character hex 'FF'. If transmitting

Copyright International Organization for Standardization
Provided by IHS under license with ISO
No reproduction or networking permitted without license from IHS
Not for Resale

a value of ’0000000’ b select neutral disparity data character hex ’EF’).

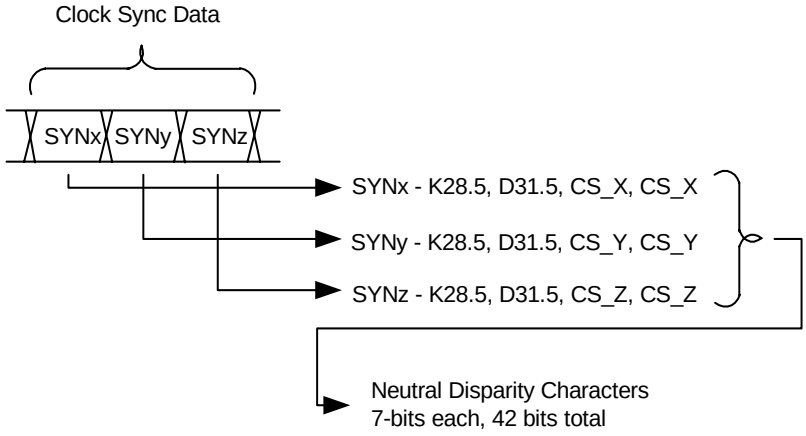


**Figure 57 - Clock Synchronization Primitive Ordered Sets**

**Table 267 - Neutral Disparity Character Values**

| **Symbol: Dxx.y** | | | | | | | | | **Neutral Disparity Character (hex)** |
|---|---|---|---|---|---|---|---|---|---|
| **xx** | **y** | | | | | | | | |
| | **0** | **1** | **2** | **3** | **4** | **5** | **6** | **7** | |
| 00 | (126) | | | | (56) | | | (5) | 00, 80, E0 |
| 01 | (125) | | | | (55) | | | (4) | 01, 81, E1 |
| 02 | (124) | | | | (54) | | | (3) | 02, 82, E2 |
| 03 | | (113) | (94) | (75) | | (43) | (24) | | 23, 43, 63, A3, C3 |
| 04 | (123) | | | | (53) | | | (2) | 04, 84, E4 |
| 05 | | (112) | (93) | (74) | | (42) | (23) | | 25, 45, 65, A5, C5 |
| 06 | | (111) | (92) | (73) | | (41) | (22) | | 26, 46, 66, A6, C6 |
| 07 | | (110) | (91) | (72) | | (40) | (21) | | 27, 47, 67, A7, C7 |
| 08 | (122) | | | | (52) | | | (1) | 08, 88, E8 |
| 09 | | (109) | (90) | (71) | | (39) | (20) | | 29, 49, 69, A9, C9 |
| 10 | | (108) | (89) | (70) | | (38) | (19) | | 2A, 4A, 6A, AA, CA |
| 11 | | (107) | (88) | (69) | | (37) | (18) | | 2B, 4B, 6B, AB, CB |
| 12 | | (106) | (87) | (68) | | (36) | (17) | | 2C, 4C, 6C, AC, CC |
| 13 | | (105) | (86) | (67) | | (35) | (16) | | 2D, 4D, 6D, AD, CD |
| Legend: (x) = Decimal value of neutral disparity character | | | | | | | | | |

Copyright International Organization for Standardization
Provided by IHS under license with ISO
No reproduction or networking permitted without license from IHS
Not for Resale

**Table 267 - Neutral Disparity Character Values (Continued)**

| Symbol: Dxx.y | | | | | | | | | Neutral Disparity Character (hex) |
|---|---|---|---|---|---|---|---|---|---|
| xx | y | | | | | | | | |
| | 0 | 1 | 2 | 3 | 4 | 5 | 6 | 7 | |
| 14 | | (104) | (85) | (66) | | (34) | (15) | | 2E, 4E, 6E, AE, CE |
| 15 | (121) | | | | (51) | | | (0) | 0F, 8F, EF |
| 16 | (120) | | | | (50) | | | (133) | 10, 90, F0 |
| 17 | | (103) | (84) | (65) | | (33) | (14) | | 31, 51, 71, B1, D1 |
| 18 | | (102) | (83) | (64) | | (32) | (13) | | 32, 52, 72, B2, D2 |
| 19 | | (101) | (82) | (63) | | (31) | (12) | | 33, 53, 73, B3, D3 |
| 20 | | (100) | (81) | (62) | | (30) | (11) | | 34, 54, 74, B4, D4 |
| 21 | | (99) | (80) | (61) | | (29) | (10) | | 35, 55, 75, B5, D5 |
| 22 | | (98) | (79) | (60) | | (28) | (9) | | 36, 56, 76, B6, D6 |
| 23 | (119) | | | | (49) | | | (132) | 17, 97, F7 |
| 24 | (118) | | | | (48) | | | (131) | 18, 98, F8 |
| 25 | | (97) | (78) | (59) | | (27) | (8) | | 39, 59, 79, B9, D9 |
| 26 | | (96) | (77) | (58) | | (26) | (7) | | 3A, 5A, 7A, BA, DA |
| 27 | (117) | | | | (47) | | | (130) | 1B, 9B, FB |
| 28 | | (95) | (76) | (57) | | (25) | (6) | | 3C, 5C, 7C, BC, DC |
| 29 | (116) | | | | (46) | | | (129) | 1D, 9D, FD |
| 30 | (115) | | | | (45) | | | (128) | 1E, 9E, FE |
| 31 | (114) | | | | (44) | | | (127) | 1F, 9F, FF |
| Total 134 | 13 | 19 | 19 | 19 | 13 | 19 | 19 | 13 | |
| Legend: (x) = Decimal value of neutral disparity character | | | | | | | | | |

### 27.3.3.2 Clock Synchronization Server Rules

The Clock Synchronization Server shall be capable of initiating clock synchronization events on a periodic basis or be disabled. The default synchronization event period shall be 1 s. The synchronization event period shall be settable from 1 µs to at least 60 s in increments of 1 µs or set to zero.

The Clock Synchronization Server shall maintain a real-time clock register with sufficient bits to fulfill requirements for clock synchronization for applications of interest and as needed to support 27.1.5, Clock Synchronization Quality of Service. If the server's real-time clock register is less than 42-bits, a 42-bit value shall be generated by concatenating the real-time clock value with bits having a value of zero in such a way that the real-time clock value resides in the least significant bit positions. Primitive clock sync characters shall be generated from this 42-bit

Copyright International Organization for Standardization
Provided by IHS under license with ISO
No reproduction or networking permitted without license from IHS Not for Resale

value.

The Clock Synchronization Server may be physically located in a Fabric or an Nx_Port.

The Clock Synchronization Server shall be addressed using Well-Known Address hex 'FF FF F6' and configured using the clock synchronization ELSs (see 12.3.2.44 and 12.3.2.45).

#### 27.3.3.3 Fabric Rules

Fabrics shall provide one port designated as the Fabric Clock Synchronization (FCS) Server port. All fabric ports shall be capable of periodically receiving clock synchronization primitives. Received clock synchronization primitives shall be interpreted the same as IDLE primitives by all ports except the FCS Server port. Following reception by the FCS Server port all fabric ports shall transmit clock synchronization primitives, except for the FCS Server port, using available inter-frame intervals. The real-time clock value transmitted by fabric ports shall be equal to the real-time clock value in the clock synchronization server, within the accuracy limits defined by the application(s) of interest.

#### 27.3.3.4 Client Rules

Clients that support clock synchronization shall be capable of periodically receiving clock synchronization primitives. Clients that do not support clock synchronization shall interpret received clock synchronization primitives the same as IDLE primitives or ignore them.

Supporting clients shall maintain a real-time clock register with sufficient bits to fulfill requirements for clock synchronization for applications of interest. The real-time clock register shall be loaded, upon receipt of three consecutive clock synchronization primitives, with the value received.

Copyright International Organization for Standardization
Provided by IHS under license with ISO
No reproduction or networking permitted without license from IHS Not for Resale

# 28 Link Speed Negotiation

## 28.1 Speed Negotiation overview

The optional speed negotiation method may be used to enable ports that are capable of multiple data transfer rates to establish in-band communications on a link (all port types). The term “speed” as used in this clause refers to the bit transfer rate. This method finds the highest speed common to the ports and to the infrastructure connecting the ports. Each port may support up to a maximum of 4 speeds in the negotiation process. The exact speeds are not specified. Different ports may negotiate with different speed ranges up to a maximum of 4 speeds each and speed negotiation shall converge provided there is a least one common speed. The link quality for speed negotiation purposes is error free Transmission Word synchronization for a minimum of 1 000 consecutive words.

Because the link quality requirements for speed negotiation are not quite as stringent as for normal operation it is possible to complete speed negotiation yet have an excessive error rate in normal operation. Excessive error rates may also happen in non speed negotiating links for the same reasons. Means of determining bit error rate are out side the scope of speed negotiation. The corrective action to be taken in the event of excessive error rate in normal operation is also determined by means not specified by the speed negotiation requirements.

NOTE One possible corrective action is to eliminate the speed that produced the excessive error rate from the speed capability list for the Port and to re-enter speed negotiation (return to state 10 in figure 61) with a reduced list. This process may be repeated until a satisfactory speed is found or until all speeds are eliminated. Note that an eliminated speed may have been the only common speed useful for diagnostic communication over the link.

Transceivers may be able to transmit and detect error free bit streams even though they and other link elements were not designed or specified for operation at the speed being used. This condition may allow links to achieve Transmission Word synchronization and satisfactory error rates but with degraded margin. It is up to the implementer to ensure that the elements of the physical plant are designed to comply with the requirements specified for operation at the set speed.

Once a particular speed has been established, Speed Negotiation is not attempted again unless a Signal Failure is detected. Speed Negotiation may disrupt communication in excess of a second. An FC_Port capable of the Speed Negotiation procedure shall initiate Speed Negotiation upon power on or Signal Failure. For this purpose, Signal Failure shall be presumed to pertain only in the following circumstances:

a) The port receiver circuit has indicated Loss of Signal; or
b) The port receiver has remained in "Loss of Synchronization" state for a time in excess of R_T_TOV; or
c) The port transceiver has been reset by means other than power on.

An FC_Port should not initiate Speed Negotiation for other reasons.

Copyright International Organization for Standardization
Provided by IHS under license with ISO
No reproduction or networking permitted without license from IHS Not for Resale

## 28.2 Link physical architecture and requirements

The physical architecture of the link is assumed to be as shown in figure 58.

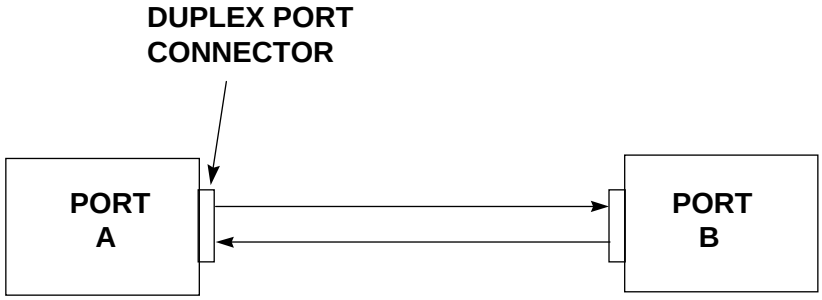


**Figure 58 - Physical architecture of the Speed Negotiating Link**

There are several points derived from this physical architecture that bear on the speed negotiation algorithm:

a) The Speed Negotiation algorithm is specified for only one port at a time (i.e., when port “A” is involved, the term transmitter applies only to the transmitter in port “A” and the term receiver applies only to the receiver in port “A”). Similar comments apply for all other features described. The algorithm may be executing on both ports at the same time.
b) No requirements are explicitly placed by the algorithm on the means for controlling the transceiver speed capabilities. However
   A) Ports implementing this algorithm shall not attain Transmission Word synchronization unless the incoming signal is within +/-10% of the receive rate set by the port implementing the algorithm.
   B) The transmitter shall be capable of switching from compliant operation at one speed to compliant operation at a new speed within 1 ms from the time the algorithm asks for a speed change
   C) The receiver shall attain Transmission Word synchronization within 1 ms when presented with a valid input stream as specified in FC-PI if the input stream is at the receive rate already set by the port implementing the algorithm. The receiver shall also be capable of attaining Transmission Word synchronization when presented with a valid input stream within 1 ms from the time the algorithm asks for a receiver speed change if the input stream is at the new receive rate set by the port implementing the algorithm.
c) A stable physical environment (fully mated connectors, no power cycles, no cable flexing, no transient noise sources, etc.) is expected during speed negotiation. Otherwise, speed negotiation may settle to a sub-optimum speed. The algorithm is capable of handling the normal connection start up transients caused by the connector insertion process (e.g., such transients include contact bounce and partial optical coupling). Sub-optimal speed may result if the connection start up transient conditions persist for more than the normal few milliseconds. Sub-optimal speed may also result if connectors between devices in the process of negotiating are demated and then remated within three seconds.
d) The transmitter and receiver shall be capable of working at different speeds at the same time during speed negotiation.
e) The algorithm supports ports capable of up to a maximum of any 4 speeds.
f) If a port configured for speed negotiation is attached to a loop, the port being attached either
   A) Shall be attached via a port in the loop that presents a single speed to the port being attached or
   B) The port in the existing loop shall conduct the speed negotiation algorithm described here with the port being attached before inserting the port being attached into the loop.

## 28.3 Speed Negotiation requirements on L_Ports

Removal of an L_Port from a loop shall not cause speed negotiation to occur on the remaining loop. This requirement maintains even if the removal of the L_Port allows negotiation of a higher common speed.

Copyright International Organization for Standardization
Provided by IHS under license with ISO
No reproduction or networking permitted without license from IHS Not for Resale

As an option to negotiating each hub port per the algorithm, multiple speed hubs may be set to a single speed during speed negotiation by some out-of-band means.

## 28.4 State machines

There are two state machines involved:

a) A Fibre Channel state machine that executes initialization and
b) A speed negotiation state machine that executes the speed negotiation algorithm. The Speed Negotiation algorithm shall complete successfully before the Fibre Channel state machine is invoked.

## 28.5 Primitives

Either OLS or NOS (for ports operating in OLD_PORT State) or LIP (for ports not operating in OLD_PORT State) shall be the only signals transmitted during speed negotiation.

## 28.6 Speed Negotiation algorithm

### 28.6.1 Algorithm overview

In this subclause, the following terminology is used:

**Speeds**

a) Tx speed list refers to the set of speeds that are currently available for negotiation by the Port. The Tx speed list may change during Negotiate_master. Transmit speed changes in the algorithm shall always be based on the Tx speed list that is currently set.
b) There is no explicit Rx speed list, since the receiver is always cycled through all speeds it supports.
c) Recorded Rx list refers to a list of the signal speeds at which pass sync_test has succeeded.
d) RX_MAX refers to the maximum Rx speed; TX_MAX refers to the maximum speed in the current Tx speed list.
e) TX refers to the present transmitter speed; RX refers to the receiver speed.
f) TxNext(xxx) is the next speed less than xxx in the Tx speed list if there is a lower speed; otherwise it is the highest speed in the Tx speed list.
g) RxNext(xxx) is the next speed less than xxx among all speeds supported by the port if there is a lower speed; otherwise it is the highest speed supported by the port.

**Timing**

a) Pass sync_test decision blocks (states 11, 21, 27, 34, 52, 56) requires that Transmission Word synchronization be maintained for at least 1 000 words and the period of monitoring shall not exceed 100 µs. Counting of 8B/10B invalid characters and disparity errors may be used for the 1 000 word times to insure robustness, if available to the firmware. If counted, the number of errors allowed shall be zero. If the number of errors is not zero, then Transmission Word synchronization (Pass sync_test decision blocks) is not considered to have occurred and a different speed is negotiated or the algorithm does not converge.
b) In contrast, Sync decision block in state 31 is Transmission Word synchronization per 6.1.4.
c) In figures 61, 62, 63, and 64 a decision diamond with a bold-face outline indicates that a delay and a test are combined (see figure 59). In operations so indicated:
   A) Other activity may be implemented before the test is performed.
   B) The test shall be completed after the minimum and before the maximum values of the delay time parameter.
   C) The actual delay time may vary from test to test, but the test shall fall within the specified limits.
d) All flowchart atoms (action boxes or decision diamonds) that do not have a bold-face outline shall execute in less than 100 µs, and no delays shall accrue between atoms (bold-face outline or not).
e) Elapsed-time timers are compared against constants in several places.
   A) $t_{tx}$, $t_{neg}$, and $t_{sync}$ start where shown being (re)set to 0 in the algorithm.
   B) $t_{tx}$ is compared against t_txcycl.

--`,,```,,,,````-`-`,,`,,`,`,,`---

Copyright International Organization for Standardization
Provided by IHS under license with ISO
No reproduction or networking permitted without license from IHS Not for Resale

C) $t_{neg}$ is compared against t_fail.
D) $t_{sync}$ is compared against t_stbl.
E) $t_{nc}$ is compared against t_ncycl and may be set at several different places.

f) The R_T_TOV watchdog timer begins anytime Transmission Word synchronization is lost during Normal_operation. Because elapsed-time counters are tested at intervals determined by a preceding delay-and-test decision (see bullet above relating to decision diamonds), the actual elapsed time determined by the elapsed-time counter test may vary from the value of the counter up to its value plus the length of the delay. In most instances, the delay may be as much as the maximum value of the range of t_rxcycl. This value was chosen to tolerate the response times of typical operating system kernels.

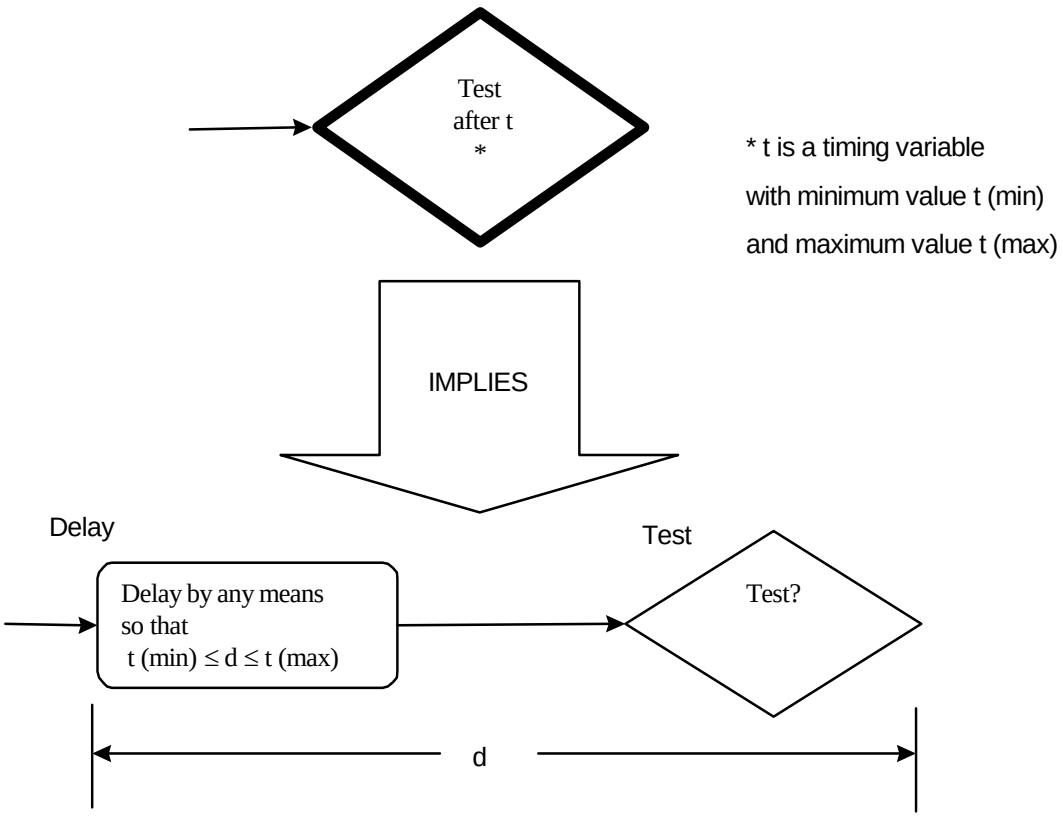


**Figure 59 - Delay / Test operations**

Figure 60 shows an overview of the Speed Negotiation algorithm. Dashed lines indicate optional features.

Copyright International Organization for Standardization
Provided by IHS under license with ISO
No reproduction or networking permitted without license from IHS
Not for Resale

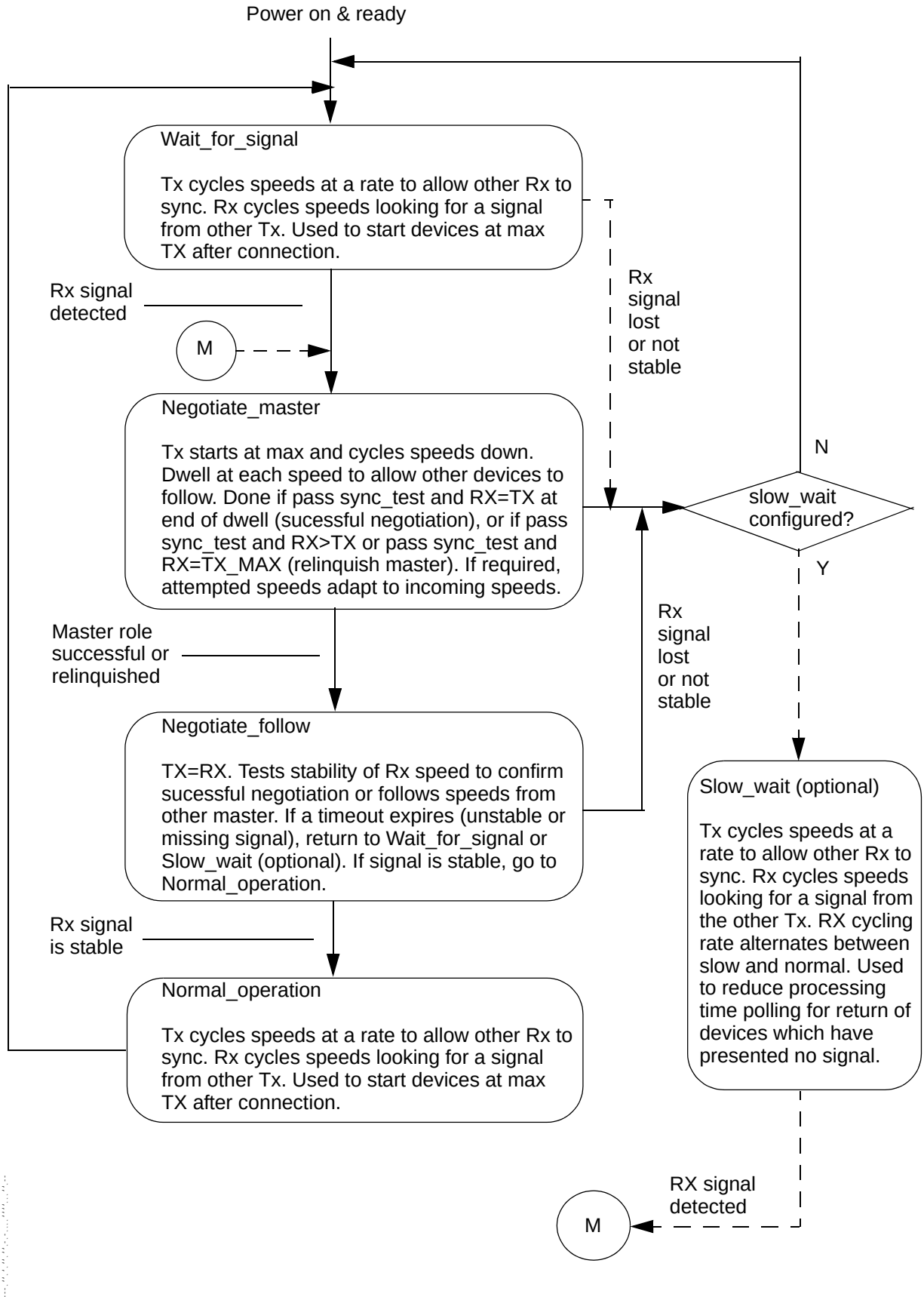


**Figure 60 - Overview of the Speed Negotiation algorithm**

Copyright International Organization for Standardization
Provided by IHS under license with ISO
No reproduction or networking permitted without license from IHS
Not for Resale

### 28.6.2 Stage 1 - Wait_for_signal

Figure 61 shows the flowchart for the Wait_for_signal stage.

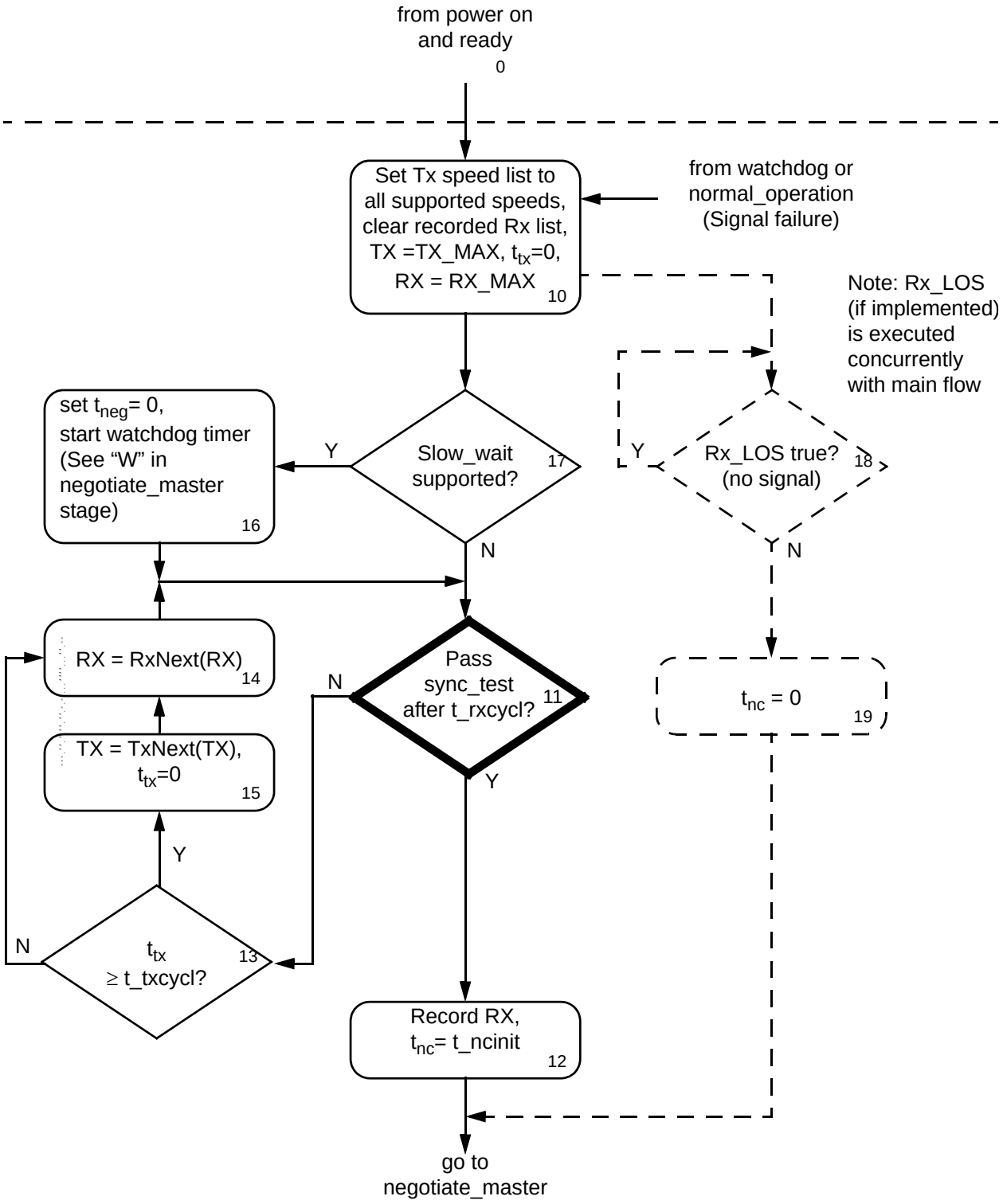


**Figure 61 - Wait_for_signal flowchart**

Copyright International Organization for Standardization
Provided by IHS under license with ISO
No reproduction or networking permitted without license from IHS
Not for Resale

**Description**

a) The device sets default parameters in state 10. States 11, 13, 14 cycle Rx speeds looking for the presence of an incoming signal from the other device that is adequate to pass the Pass sync_test. If found, RX is recorded, and the device moves onto Negotiate_master.
b) Tx speeds are cycled slowly compared to the time spent in 1 Rx speed. This allows the receiving side of the opposite Port to cycle through at least 5 Rx speeds at each transmitted speed before the transmitted speed changes.
c) Monitoring for synchronization is performed as part of the test in state 11. Should the period of monitoring satisfy the definition of “Pass sync_test” decision blocks above, the reception of this speed shall be recorded and $t_{nc}$ shall be set to t_ncinit (state 12).
d) If the slow_wait optional stage is implemented, the watchdog timer diagrammed in figure 62 and described in 28.6.3 shall be initiated after entry to the wait_for_signal stage. If the slow_wait optional stage is not implemented, the watchdog timer shall be initiated at entry to the Negotiate_master stage but not initiated in the Wait_for_signal stage.
e) Prior to entering state 10 from power on and ready condition, a port capable of speed negotiation shall be considered incapable of participating in normal protocol, so its transmitter shall be disabled and nothing shall be transmitted until its transmitter is enabled in the course of step 10. See [9], FC-PI.

Rx_LOS, if implemented (see dashed lines in figure 61), may be used in addition to periodically monitoring for receiver synchronization. If this option is implemented, Rx_LOS may be monitored by any means and at any time during the wait_for_signal stage after execution of block 10. If Rx_LOS becomes false, the algorithm transitions to the Negotiate_master stage without recording a received speed. In some configurations, Rx_LOS negation may occur in the absence of an active attached device. This may cause spurious entry into Negotiate_master.

### 28.6.3 Stage 2 - Negotiate_master and Watchdog timer

Figure 62 shows the flowchart for Negotiate_master and Watchdog timer.

Copyright International Organization for Standardization
Provided by IHS under license with ISO
No reproduction or networking permitted without license from IHS Not for Resale

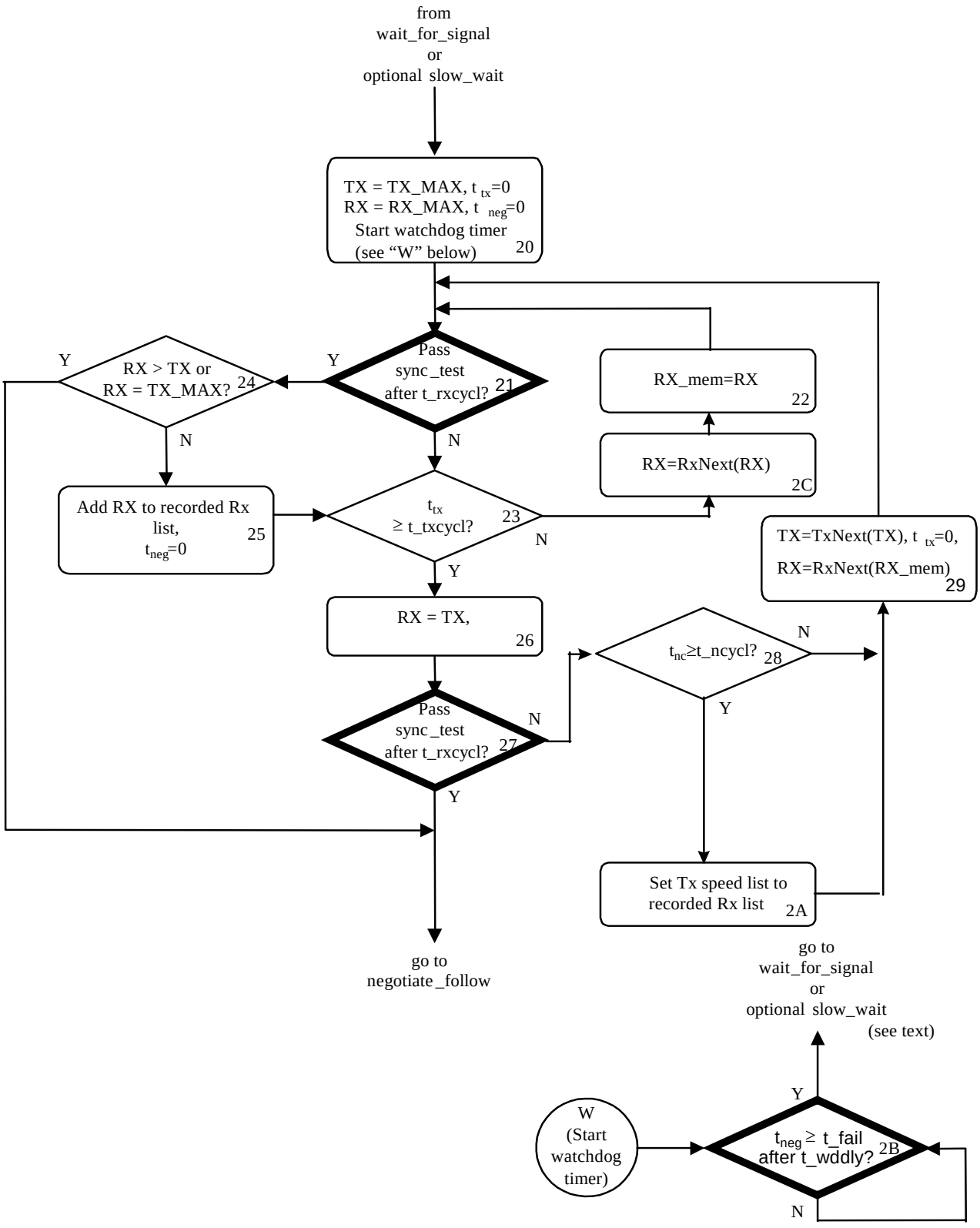


**Figure 62 - Negotiate_master and Watchdog timer flowchart**

Copyright International Organization for Standardization
Provided by IHS under license with ISO
No reproduction or networking permitted without license from IHS
Not for Resale

**Description:**

a) The general operation of the algorithm is to start at the highest speed and step down until both devices agree on a speed. Lower speeds are tried only if higher speeds fail.
b) States 23 & 26-2A control TX. A transmit speed is forced (starting at the highest speed) for sufficient time (t_txcycl + t_rxcycl) for the other device to pass the Pass sync_test and follow (See 28.6.4) and return TX back to the master. If NO from state 27, another (lower) Tx speed is attempted; if YES, the master role is assumed to be successful, and the algorithm moves to state 30 in Negotiate_follow.
c) There are two conditions that may cause YES in state 27: (1) the other device is in follow mode as described above, and (2) the other device is also in master mode transmitting at the same speed. If the latter, the master role is effectively relinquished to the other master.
d) If the port has had sufficient time to detect all possible speeds (maximum of 4 speeds) from the other port, but master role has not completed, states 28 & 2A adapt the Tx speed list to the incoming speeds recorded in the Rx list (state 25). This is usually does not occur unless the cable plant only supports a limited set of speeds.
e) States 21 to 25 control RX. To constantly monitor for an incoming rate that is higher than TX or equal to the maximum rate in the Tx speed list. If such a speed is found (Pass sync_test passed), the device relinquishes its master role to the other device, and transfers to the Negotiate_follow stage.
f) A watchdog timer, $t_{neg}$, keeps track of time between passed Pass sync_tests (states 11, 21, 27, and 34). If $t_{neg}$ exceeds t_fail the port enters Slow_wait if the optional slow_wait stage is implemented and enabled. If the optional Slow_wait stage is not implemented the Port returns to wait_for_signal if $t_{neg}$ exceeds t_fail.

Rx_LOS shall not be used during Negotiate_master stage.

### 28.6.4 Stage 3 - Negotiate_follow

Figure 63 shows the flowchart for the Negotiate_follow stage.

--`,,```,,,,````-`-`,,`,,`,`,,`---
Copyright International Organization for Standardization
Provided by IHS under license with ISO
No reproduction or networking permitted without license from IHS Not for Resale

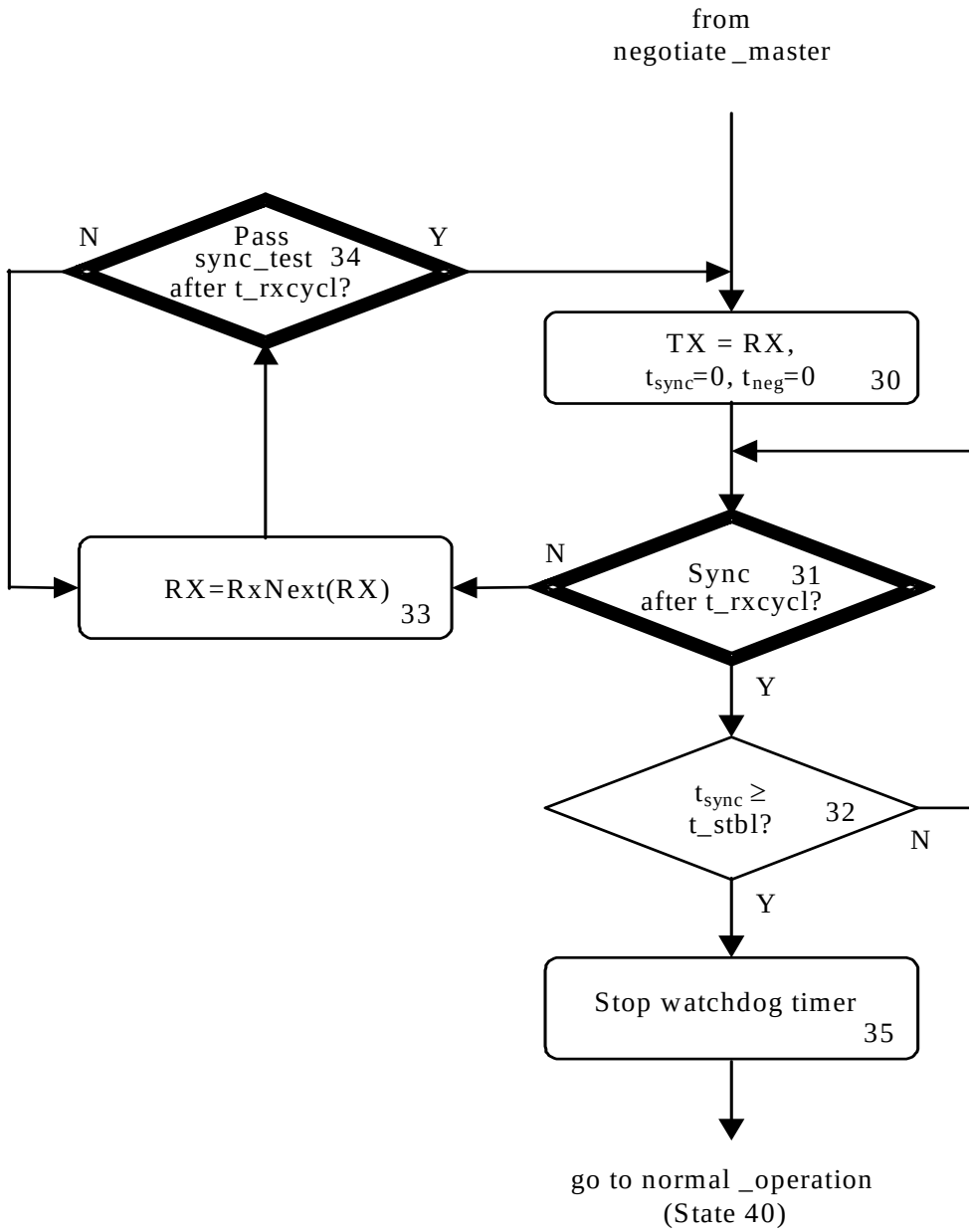


**Figure 63 - Negotiate_follow flowchart**

**Description:**

a) A Port in the Negotiate_follow stage attempts to transmit its incoming speed.
b) If sync is lost (e.g., due to an incoming signal speed change), the port seeks sync at another Rx speed. If obtained, TX is adjusted to follow the new RX, and the test for t_stbl starts over.
c) This continues until sync is held for at least t_stbl in state 31 (in the case where the other master is not driving other speeds). During this time, TX and RX have been matched, allowing the other device to come to a YES decision in state 27. After t_stbl, the Port moves to state 40.
d) The same watchdog timer used in Negotiate_master is also used in Negotiate_follow.

Rx_LOS shall not be used during Negotiate_follow stage.

Copyright International Organization for Standardization
Provided by IHS under license with ISO
No reproduction or networking permitted without license from IHS Not for Resale

### 28.6.5 Stage 4 - Normal operation

Figure 64 shows the flowchart for the normal operation stage

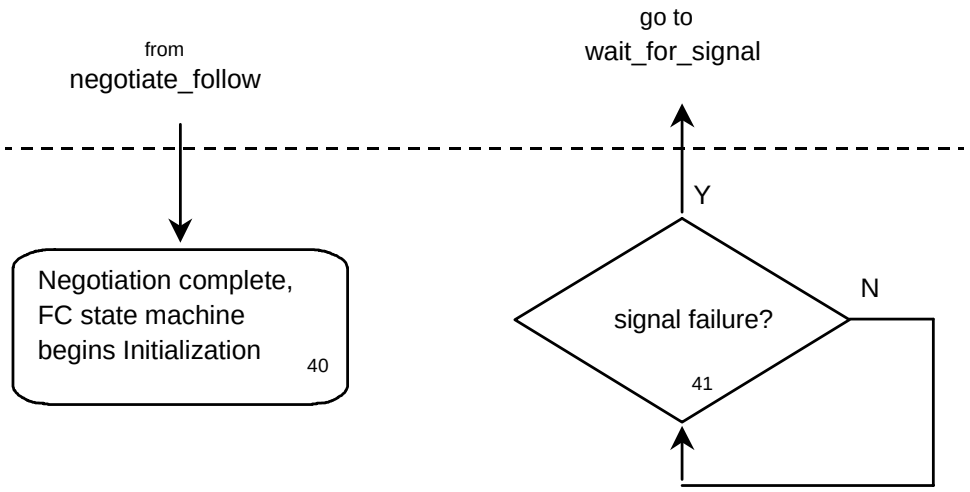


**Figure 64 - Normal operation flowchart**

**Description:**

a) State 40 - negotiation is completed and initialization shall begin.
b) State 41 - whenever subsequent Signal Failure occurs, negotiation shall re-enter at state 10.

### 28.6.6 Optional Stage 5 - Slow_wait

Figure 65 shows the flowchart for the optional slow_wait stage.

Copyright International Organization for Standardization
Provided by IHS under license with ISO
No reproduction or networking permitted without license from IHS
Not for Resale

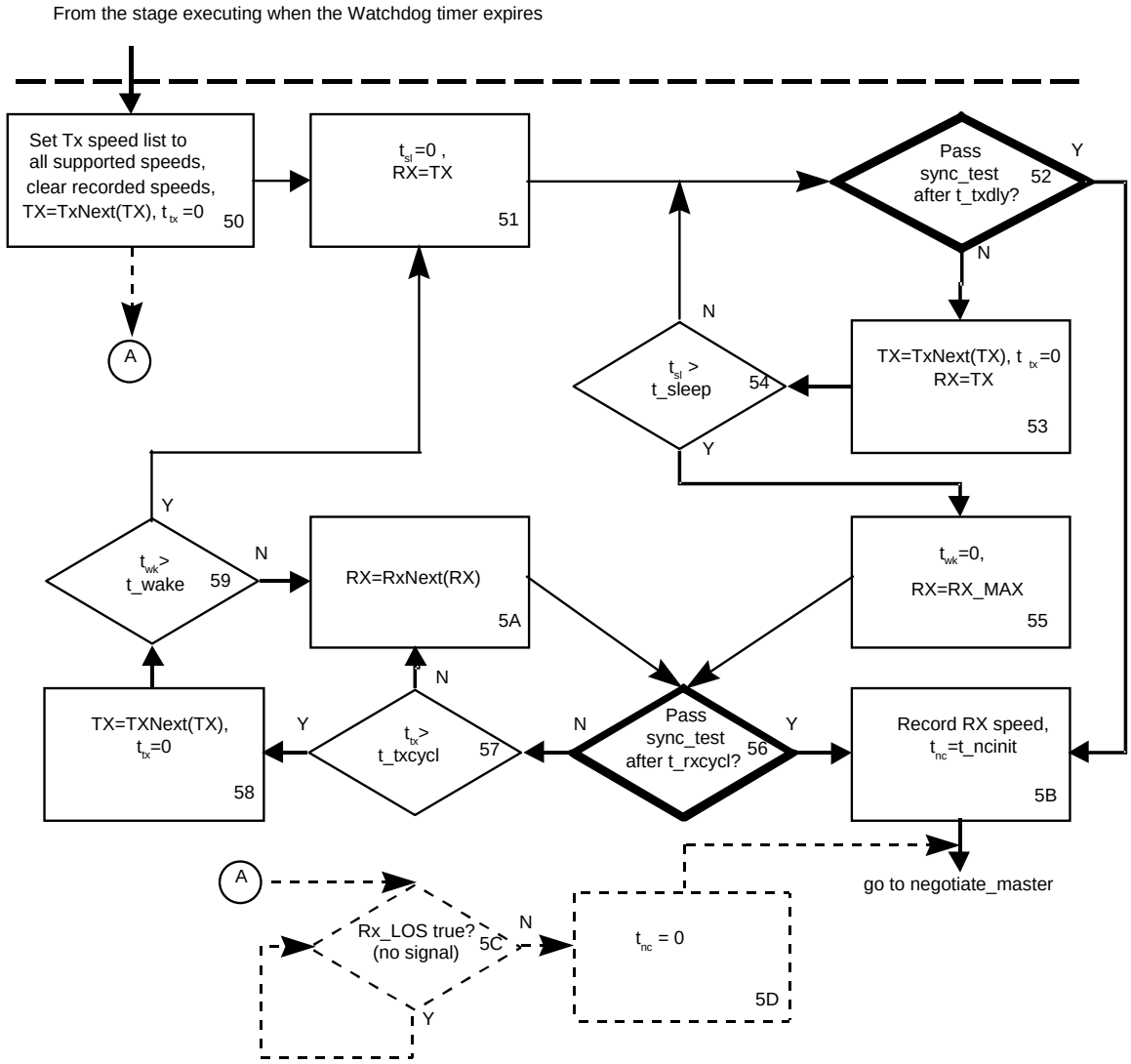


**Figure 65 - Slow_wait flowchart**

**Description:**

Upon watchdog timer expiration, the Slow_wait stage may be entered as an alternative to returning to the Wait_for_signal stage. Its implementation is optional, and if implemented, its use may be a configuration option. Use of this optional stage reduces by approximately 80% the processing time required to monitor a Port that does not receive a valid signal at any supported speed (e.g., not cabled). However, the response to a signal being presented may be delayed by up to t_sleep (see table 269).

a) Entry into the Slow_wait stage occurs when the watchdog timer expires regardless of the stage executing when the expiration occurs.
b) The device sets default parameters in state 50. Transmit speed cycling begins here and is uninterrupted throughout this stage, independent of cycling between slow and normal receiver speed changes.
c) State 51 initializes the sleep timer that defines the low processing load portion of the algorithm (states 52, 53, and 54).
d) States 52, 53, and 54 cycle both transmitter and receiver speeds at the normal transmitter speed cycling rate, checking for synchronization with any incoming signal from the upstream device before each speed

Copyright International Organization for Standardization
Provided by IHS under license with ISO
No reproduction or networking permitted without license from IHS
Not for Resale

change. Limiting the transmit time at each speed allows a downstream device to detect sync but not exit prematurely from Negotiate_follow. The synchronization test enables prompt synchronization to a fixed speed upstream device, reducing loop disruption upon attachment to a hub, or to an upstream device in Negotiate_follow stage. Processing load is reduced because the normal transmitter speed cycle is approximately one fifth the rate of the normal receiver speed cycle. This loop exits after operating for time t_sleep, or it transits to the Negotiate_master stage if synchronization is detected at the transmitted speed.

e) States 55 initializes the receive speed and the wake timer for a period of normal receiver speed cycling.
f) States 56, 57, 58, 59, and 5A continue to cycle transmitter speeds but now cycle receiver speeds at their normal rate. This continues to present a signal for the downstream device to synchronize, while now attempting to synchronize with a negotiating upstream device. During this period, the behavior and processing load of the slow_wait stage is the same as the wait_for_signal stage. If synchronization is achieved, the receiver speed is recorded and the algorithm proceeds to the Negotiate_master stage. If the wake timer expires, the algorithm returns to the low processing load mode of operation.

Rx_LOS, if implemented (see dashed lines in figure 65), may be used in addition to periodically monitoring for receiver synchronization. If this option is implemented, Rx_LOS may be monitored by any means and at any time during the slow_wait stage. If Rx_LOS becomes false, the algorithm transitions to the Negotiate_master stage without recording a received speed. In some configurations, Rx_LOS negation may occur in the absence of an active attached device. This may cause spurious entry into Negotiate_master.

### 28.6.7 Timing requirements

This section describes the timing requirements for the Speed Negotiation algorithm.

The following are variables implemented to execute the algorithm:

a) $t_{tx}$: a timer that indicates the length of time since a transmitter has most recently been instructed to switch speeds. It is compared against t_txcycl to control duration of a transmitted speed.
b) $t_{neg}$: a timer that indicates the length of time since the most recent
successful Pass sync_test, or
entry into Negotiate_master, or
entry into Negotiate_follow, or
entry into Wait_for_signal if the optional Slow_wait stage is implemented
$t_{neg}$ is compared against t_fail to timeout in case of Loss-of-Signal quality during negotiation
c) $t_{sync}$: a timer that indicates the length of time that a receiver maintains Word_sync at a single speed. $T_{sync}$ is used to determine that the remote transmitter is stable and is not actively changing speeds.

The following are parameters that define part of the criteria for decision points in the algorithm:

a) Receiver Cycle Time, t_rxcycl: The limits for the time the receiver is set to a particular speed during portions of the algorithm where the receiver is cycling speeds
b) Master_Transmitter Cycle Time, t_txcycl: The time threshold used to govern the transmission time of a particular speed in the Wait_for_signal, Negotiate_master, and Slow_wait stages.
c) Speed stability time, t_stbl: Time threshold required to ensure stability of the speed received from the other Port
d) Watchdog timer threshold, t_fail: Time allowed for the algorithm to continue without passing the Pass sync_test at any supported speed
e) Low processing load sleep time, t_sleep: Threshold time for which the receiver may be cycled at the transmitter cycling rate in the Slow_wait stage. During this interval, attachment to a negotiating Port may not be detected, but attachment to a fixed speed Port is detected.
f) Periodic sync search wake time, t_wake: Threshold time for normal cycling of receiver speeds in the Slow_wait stage required to allow synchronization if the upstream Port is executing speed negotiation.
g) Speed recording time, t_ncycl: A threshold time that ensures that all possible speeds from another negotiating Port have been sampled by the receiver during the Negotiate_master stage.
h) Speed recording time initial value, t_ncinit: a constant describing the initial value for $t_{nc}$ when Pass sync_test has been achieved at a speed before entry to Negotiate_master stage.

Copyright International Organization for Standardization
Provided by IHS under license with ISO
No reproduction or networking permitted without license from IHS Not for Resale

i) Timer test delay, t_wddly: Denotes the limits on the delay that shall be included in each cycle of the watchdog timer test (state 2B).
j) Slow_wait stage transmit cycle delay, t_txdly: Denotes the limits on the delay that shall be included in each cycle of the low processing overhead loop implemented by states 52 to 54.

Table 268 lists the range of values allowed for the specified timing parameter. Table 269 lists the value of timing parameters used only in comparison or as a value that is set, t_ncinit.

**Table 268 - Timing parameters with a range**

| Timing Parameter | Min (ms) | Max (ms) |
|---|---|---|
| t_rxcycl | 2 | 30 |
| t_wddly | 0 | 32 |
| t_txdly | 154 | 184 |

**Table 269 - Constant timing parameters**

| Timing Parameter | Value (ms) |
|---|---|
| t_txcycl | 154 |
| t_stbl | 217 |
| t_ncycl | 1 652 |
| t_ncinit | 370 |
| t_fail | 1 620 |
| t_sleep | 5 000 |
| t_wake | 900 |

Copyright International Organization for Standardization
Provided by IHS under license with ISO
No reproduction or networking permitted without license from IHS Not for Resale

# Annex A
(informative)

# CRC generation and checking

## A.1 Extract from FDDI

First part of this annex is an extract from Fibre Distributed Data Interface (FDDI) Media Access Control (MAC) (see [3]). FDDI's Frame Check Sequence (FCS) methodology, polynomials and equations are used by Cyclic Redundancy Check (CRC) in FC-2. The term FCS is unique to FDDI and not used by Fibre Channel. CRC coverage is defined in 8.6**.**

## A.2 Frame check sequence (FCS)

This annex specifies the generation and checking of the FCS field. This field is used to detect erroneous data bits within the frame as well as erroneous addition or deletion of bits to the frame. The fields covered by the FCS field include the FC, DA, SA, INFO, and FCS fields.

## A.3 Definitions

F(x) - A degree k-1 polynomial that is used to represent the k bits of the frame covered by the FCS sequence (see section 4.2.2). For the purposes of the FCS, the coefficient of the highest order term is the first bit transmitted.

L(x) - A degree 31 polynomial with all of the coefficients equal to one, i.e.,

$$L(x) = X^{31} + X^{30} + X^{29} + \ldots + X^2 + X^1 + 1$$

G(x) - The standard generator polynomial

$$G(x) = X^{32} + X^{26} + X^{23} + X^{22} + X^{16} + X^{12} + X^{11} + X^{10} + X^8 + X^7 + X^5 + X^4 + X^2 + X + 1$$

R(x) - The remainder polynomial that is of degree less than 32

P(x) - The remainder polynomial on the receive checking side that is of degree less than 32

FCS - The FCS polynomial that is of degree less than 32

Q(x) - The greatest multiple of G(x) in $[X^{32} F(x) + X^k L(x)]$

$Q^*(x)$ - Is defined as $X^{32} Q(x)$

M(x) - The sequence that is transmitted

M*(x) - The sequence that is received

C(x) - A unique polynomial remainder produced by the receiver upon reception of an error free sequence. This polynomial has the value

$$C(X) = X^{32} L(X) / G(X)$$

$$C(x) = X^{31} + X^{30} + X^{26} + X^{25} + X^{24} + X^{18} + X^{15} + X^{14} + X^{12} + X^{11} + X^{10} + X^8 + X^6 + X^5 + X^4 + X^3 + X + 1$$

--`,,```,,,,````-`-`,,`,,`,`,,`---

Copyright International Organization for Standardization
Provided by IHS under license with ISO
No reproduction or networking permitted without license from IHS Not for Resale

### A.3.1 FCS generation equations

The equations that are used to generate the FCS sequence from F(x), are as follows:

a) FCS = L(X)+R(X) = R$(X)
where R$(X) is the one's complement of R(X)

NOTE 1 Adding L(x) (all ones) to R(x) simply produces the one's complement of R(x); this equation is specifying that the R(x) is inverted before it is sent out.

b) $[X^{32} F(x) + X^{k} L(X)] / G(X) = Q(X) + R(X) / G(X)$

c) $M(x) = x^{32} F(x) + FCS$

NOTE 2 All arithmetic is modulo 2.

NOTE 3 Equation c) above specifies that the FCS is appended to the end of F(x).

### A.3.2 FCS checking

The received sequence M*(x) may differ from the transmitted sequence M(x) if there are transmission errors. The process of checking the sequence for validity involves dividing the received sequence by G(x) and testing the remainder. Direct division, however, does not yield a unique remainder because of the possibility of leading zeros. Thus a term L(x) is prepended to M*(x) before it is divided. Mathematically, the received checking is shown in the following equation:

a) $X^{32} [M^*(X)+X^{k} L(X)] / G(X)=Q^*(X) + P(X) / G(X)$

In the absence of errors, the unique remainder is the remainder of the division

b) $P(X) / G(X) = X^{32} L(X) / G(X) = C(X)$

## A.4 CRC generation

The transmission bit order is defined as the bit ordering used by FC-1 prior to 8B/10B encoding (see clause 5), with bit A as the first bit transmitted and bit H as the last. The CRC field is calculated on the Frame_Header and the Data Field content, using the defined transmission bit order (see 8.2), represented as the polynomial F(x) in figure A.1. The CRC field R$(x) is transmitted sequentially starting with the highest order term [X(31)] and ending with the lowest order term [X(0)].

Figure A.1 illustrates the flow from FC-2 to FC-0 using the FC-FS notation, including a reference to the mathematical notation used in A.1. The FC-2 word notation designates the most significant bit of the word as bit 31 and the least significant bit as 0. The FC-2 passes the words to FC-1 from left to right (i.e., Word 0 through n). FC-1 transmits each byte starting with the least significant bit, namely bits A-E first followed by bits F-H (e.g., in figure A.1, the first byte of word 0 is transmitted with bit 24 first as bit A and bit 31 last as bit H). The order of the polynomial F(x) covered by the CRC and the order of the CRC polynomial R$(x) are illustrated in figure A.1.

Copyright International Organization for Standardization
Provided by IHS under license with ISO
No reproduction or networking permitted without license from IHS Not for Resale

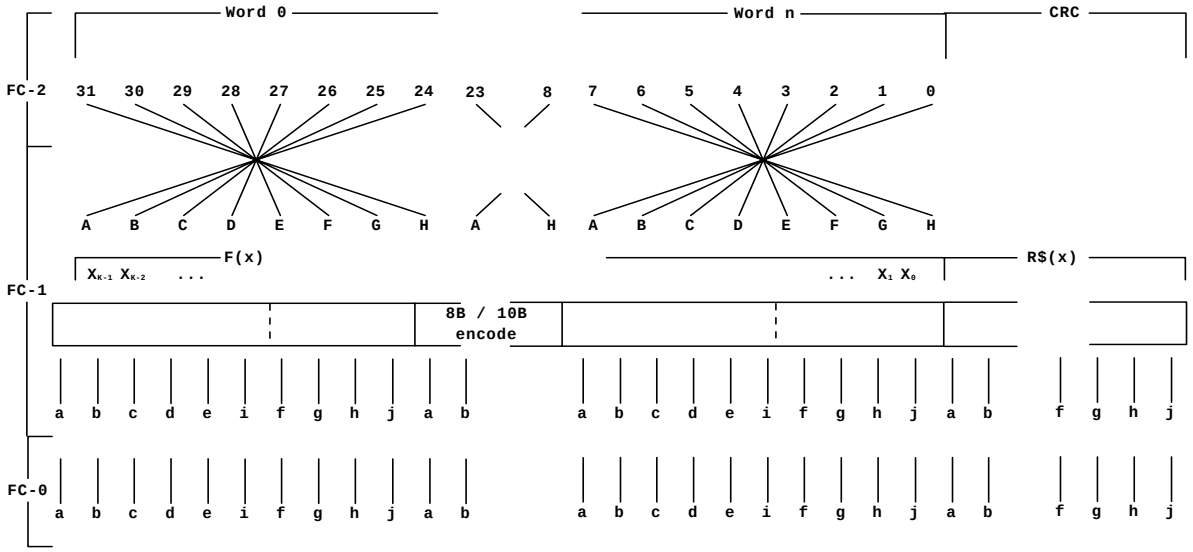


**Figure A.1 - CRC coverage and bit ordering**

## A.5 Transmit order of a word

The transmit order of a FC-2 word in the example illustrated in figure A.1 is expanded in figure A.2. The top half of the figure shows the ordering of the first halfword sent and the bottom half shows the ordering of the second halfword.

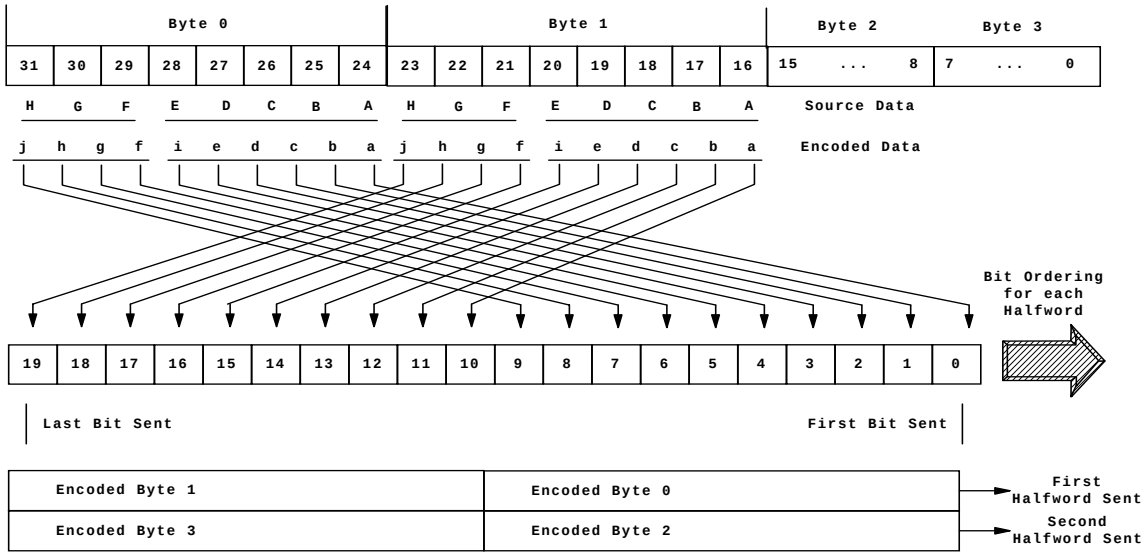


**Figure A.2 - Word transmit order**

## A.6 CRC generation example for ACK_1 frame

An example of CRC generation for an ACK_1 frame is provided in a set of tables A.1 through A.8. Table A.1 shows an example of an ACK_1 fields without CRC and table A.2 shows the hexadecimal values for each field. Table A.3

Copyright International Organization for Standardization
Provided by IHS under license with ISO
No reproduction or networking permitted without license from IHS
Not for Resale

shows the transmit bit order (hex ’03 80 40 C..0 80’) with the bytes in table A.2 transposed. Table A.4 shows the bit stream X(32)F(x)+X(k)L(x) (hex ’FC 7F..0 80’) for the sample. Table A.5 shows the generated remainder (hex ’64 9E OB F7’) for the sample. Table A.6 shows the one's complement of the remainder (hex ’9B 61 F4 08’) for the sample. The transmitted bit sequence for the sample with the CRC (hex ’03 80 40 C..F4 08’) is shown in table A.7. The transmitted 10B stream for the sample with CRC is shown in table A.8.

**Table A.1 - Sample FC-2 frame**

| **Sample ACK_1 without CRC (frame header fields)** | | |
|---|---|---|
| R_CTL | D_ID | |
| rrrr rrrr | S_ID | |
| TYPE | F_CTL | |
| SEQ_ID | DF_CTL | SEQ_CNT |
| OX_ID | | RX_ID |
| Parameter | | |

**Table A.2 - Sample ACK_1 without CRC**

| **Sample Frame_Header** | | | |
|---|---|---|---|
| C0 | 01 | 02 | 03 |
| 00 | 04 | 05 | 06 |
| 00 | C0 | 00 | 00 |
| 02 | 00 | 00 | 03 |
| FF | FF | FF | FF |
| 00 | 00 | 00 | 01 |

**Table A.3 - F(x)**

| **Bytes in Table A.2 transposed** | | | |
|---|---|---|---|
| 03 | 80 | 40 | C0 |
| 00 | 20 | A0 | 60 |
| 00 | 03 | 00 | 00 |
| 40 | 00 | 00 | C0 |
| FF | FF | FF | FF |
| 00 | 00 | 00 | 80 |

Copyright International Organization for Standardization
Provided by IHS under license with ISO
No reproduction or networking permitted without license from IHS Not for Resale

**Table A.4 - X**32 F(x) + X**k L(x)**

| | | | |
|---|---|---|---|
| FC | 7F | BF | 3F |
| 00 | 20 | A0 | 60 |
| 00 | 03 | 00 | 00 |
| 40 | 00 | 00 | C0 |
| FF | FF | FF | FF |
| 00 | 00 | 00 | 80 |

**Table A.5 - R(x)**

| | | | |
|---|---|---|---|
| 64 | 9E | 0B | F7 |

**Table A.6 - L(x) + R(x) = R$(x)**

| | | | |
|---|---|---|---|
| 9B | 61 | F4 | 08 |

**Table A.7 - M(x)**

| | | | |
|---|---|---|---|
| 03 | 80 | 40 | C0 |
| 00 | 20 | A0 | 60 |
| 00 | 03 | 00 | 00 |
| 40 | 00 | 00 | C0 |
| FF | FF | FF | FF |
| 00 | 00 | 00 | 80 |
| 9B | 61 | F4 | 08 |

Copyright International Organization for Standardization
Provided by IHS under license with ISO
No reproduction or networking permitted without license from IHS Not for Resale

**Table A.8 - M(x) - (10B)**

| | | | |
|---|---|---|---|
| D0.6 | D1.0 | D2.0 | D3.0 |
| D0.0 | D4.0 | D5.0 | D6.0 |
| D0.0 | D0.6 | D0.0 | D0.0 |
| D2.0 | D0.0 | D0.0 | D3.0 |
| D31.7 | D31.7 | D31.7 | D31.7 |
| D0.0 | D0.0 | D0.0 | D1.0 |
| D25.6 | D6.4 | D15.1 | D16.0 |

# Annex B
(informative)

# Data transfer protocols and examples

## B.1 General

This annex provides Data transfer protocol examples.

## B.2 Frame level protocol

### B.2.1 Class 1 and 6 frame level protocol

Class 1 and 6 frame level protocols employ

a) Data frame
b) ACK
c) R_RDY (response to $SOF_{c1}$)

The Class 1 and 6 frame level protocol is illustrated in figure B.1.

a) The Originator initiates the Sequence with a Data frame embedded with $SOF_{c1}$ or $SOF_{i1}$.
b) $SOF_{c1}$ is used to indicate a Connect-request and the Sequence initiation. The Fx_Port and the destination Nx_Port, as illustrated respond this Data frame with $SOF_{c1}$ with a R_RDY. Next Data frame is not sent until the Connect-request is accepted by the destination, unless the Fabric supports stacked connect-requests (With stacked connect-requests, the only Data frame that should be sent before the connect-request is accepted by the destination is another connect-request to a different destination).
c) Within an established Connection $SOF_{i1}$ indicates the Sequence initiation.
d) The Originator streams multiple Data frames and the Responder responds with ACK.
   A) The ACK returns the following information unaltered contained in the F_CTL of Data frame to which it is responding:
      First Sequence
      Last Sequence
      Last Data frame
      Sequence transmit initiative
   B) The ACK toggles following information contained in the F_CTL of the Data frame:
      Exchange Context
      Sequence Context

   F_CTL usage for the Sequence is described in table B.1.
e) $SOF_{n1}$ is used to indicate the Sequence in progress.
f) The end of Sequence is indicated to the Sequence Recipient by the Last Data frame bit in F_CTL. The last ACK is embedded with $EOF_t$ or $EOF_{dt}$ that indicates the end of Sequence to the Sequence Initiator.
g) The Last Sequence and the Last Data frame bits in F_CTL indicate the end of Exchange to the Sequence Recipient. The Last Sequence and the $EOF_t$ or $EOF_{dt}$ indicate to either Nx_Port the end of Exchange.

--`,,```,,,,````-`-`,,`,,`,`,,`---

Copyright International Organization for Standardization
Provided by IHS under license with ISO
No reproduction or networking permitted without license from IHS Not for Resale

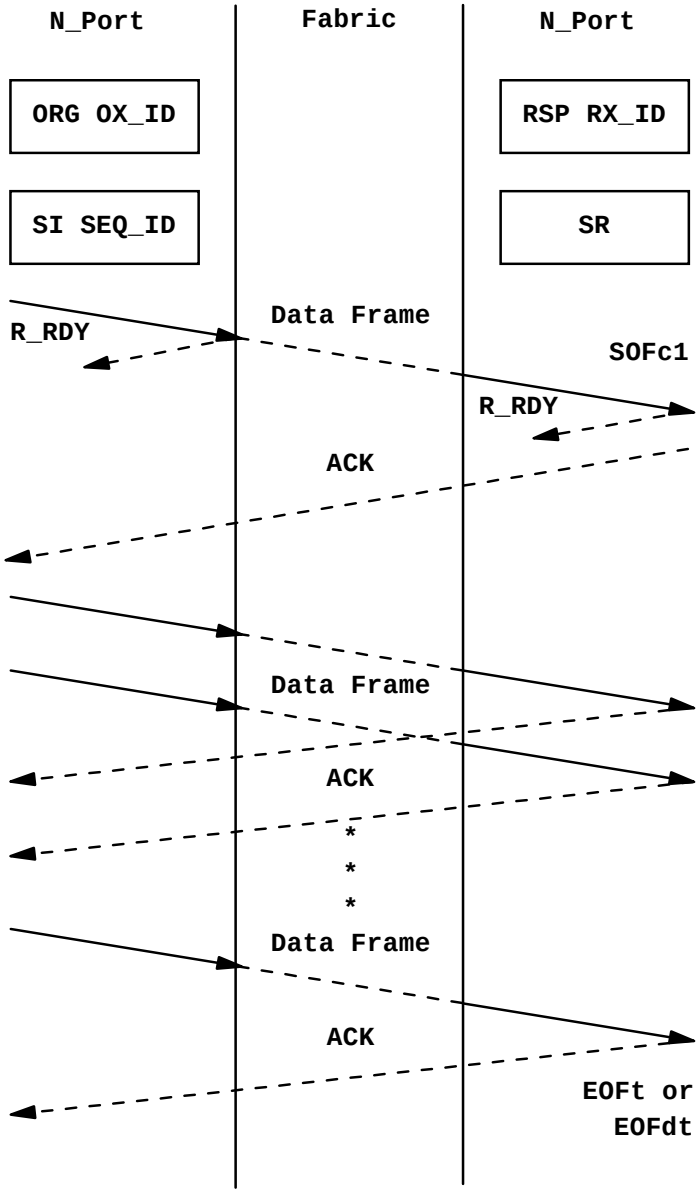


**Figure B.1 - Class 1 and 6 frame level protocol**

### B.2.2 Class 2 frame level protocol

The Class 2 frame level protocol employs:

a) Data frame
b) ACK
c) R_RDY

The Class 2 frame level protocol is illustrated in figure B.2.

1) The Originator initiates the Sequence with a Data frame embedded with SOFi1.
2) The Fx_Port responds with an R_RDY and forwards the Data frame to the destination.
3) The destination responds with an R_RDY, in addition to ACK.

Copyright International Organization for Standardization
Provided by IHS under license with ISO
No reproduction or networking permitted without license from IHS Not for Resale

4) The Fx_Port and the Nx_Port respond each with R_RDY on receipt of ACK.
5) The Originator streams multiple Data frames and the Responder responds with ACK.
   A) ACK returns some information contained in F_CTL of the Data frame to which it is responding unaltered.
      First Sequence
      Last Sequence
      Last Data frame
      Sequence transmit initiative
   B) ACK toggles some information contained in F_CTL of the Data frame.
      Exchange Context
      Sequence Context
   C) F_CTL usage for the Sequence is described in table B.1.
6) For each of these frames received, each Nx_Port or Fx_Port returns a R_RDY.
7) $SOF_{n2}$ is used to indicate the Sequence in progress.
8) The Sequence Initiator indicates the end of Sequence by the Last Data frame bit in F_CTL. However, the Sequence ends in the perspective of Sequence Recipient, only when all Data frames are received or accounted for.
9) The Sequence Recipient transmits $EOF_t$ only in the final ACK after all Data frames are received or accounted for.

Copyright International Organization for Standardization
Provided by IHS under license with ISO
No reproduction or networking permitted without license from IHS Not for Resale

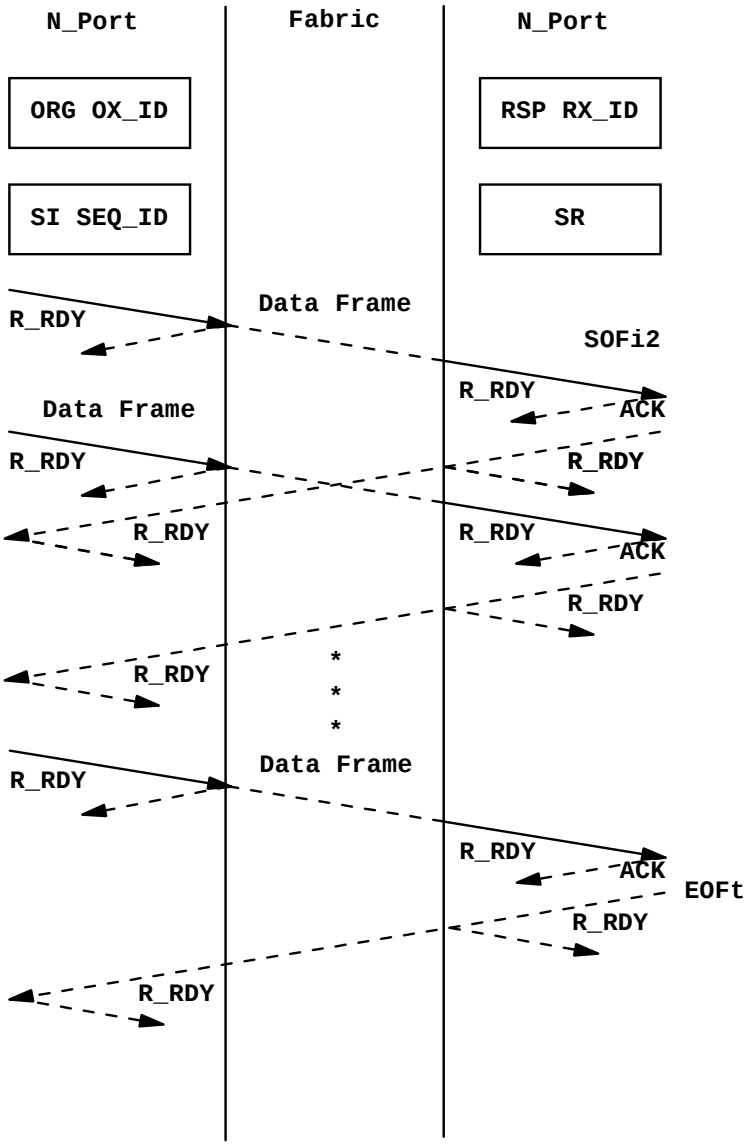


**Figure B.2 - Class 2 frame level protocol**

### B.2.3 Class 3 Frame Level Protocol

The Class 3 frame level protocol employs:

a) Data frame
b) R_RDY

The Class 3 frame level protocol is illustrated in figure B.3.

1) The Originator initiates the Sequence with a Data frame embedded with $SOF_{i3}$.
2) The Fx_Port responds with an R_RDY and forwards the Data frame to the destination.
3) The destination responds with an R_RDY.
4) The Originator streams multiple Data frames. For each of these frames received, each Nx_Port or Fx_Port returns a R_RDY. F_CTL usage for the Sequence is described in table B.2.
5) $SOF_{n3}$ is used to indicate the Sequence in progress.

Copyright International Organization for Standardization
Provided by IHS under license with ISO
No reproduction or networking permitted without license from IHS Not for Resale

6) The end of Sequence is indicated to the Sequence Recipient by the Last Data frame bit in F_CTL and EOFt.

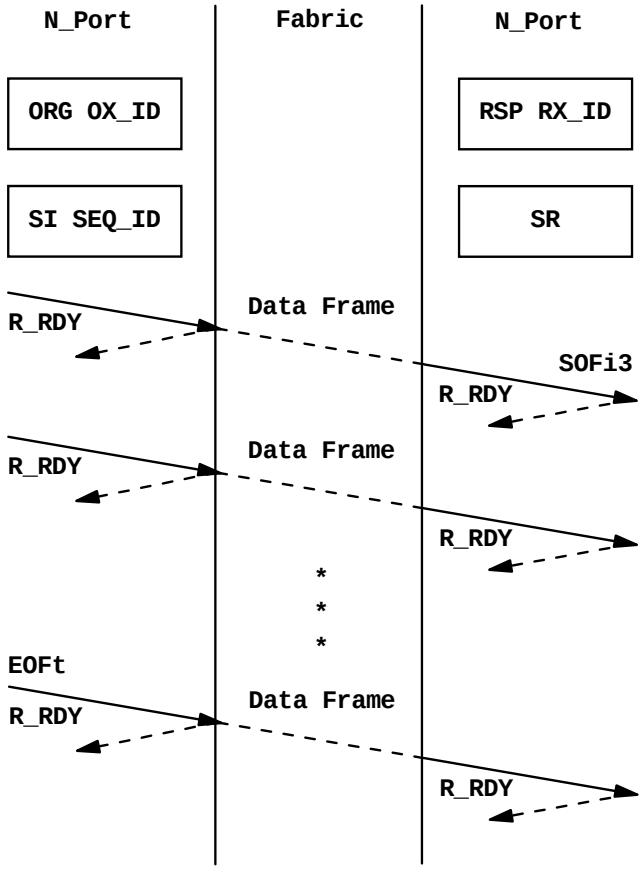


**Figure B.3 - Class 3 frame level protocol**

Copyright International Organization for Standardization
Provided by IHS under license with ISO
No reproduction or networking permitted without license from IHS
Not for Resale

**Table B.1 - F_CTL for Class 1, Class 2, and Class 6 frame level protocols**

| Description | Exchange Context | Sequence Context | First Sequence of Exchange | Last Sequence of Exchange | End Sequence | Sequence transmit initiative |
|---|---|---|---|---|---|---|
| F_CTL Bits | 23 | 22 | 21 | 20 | 19 | 16 |
| First Data frame | 0 (ORG) | 0 (SI) | 1 (First) | 0 (Sequence) | 0 | 0 (NM) |
| ACK | 1 (RSP) | 1 (SR) | 1 (First) | 0 Sequence) | 0 | 0 (NM) |
| Intermediate Data frame(s) | 0 | 0 | 1 | 0 | 0 | 0 (NM) |
| ACK | 1 | 1 | 1 | 0 | 0 | 0 (NM) |
| Last Data frame | 0 | 0 | 1 | 0 | 1 | 0 (retain Sequence Initiative) |
| ACK | 1 | 1 | 1 | 0 | 0 | 0 (NM) |
| Legend: NM - Not Meaningful | | | | | | |

**Table B.2 - F_CTL for Class 3 frame level protocol**

| Description | Exchange Context | Sequence Context | First Sequence of Exchange | Last Sequence of Exchange | End Sequence | Sequence transmit initiative |
|---|---|---|---|---|---|---|
| **F_CTL Bits** | **23** | **22** | **21** | **20** | **19** | **16** |
| First Data frame | 0 (ORG) | 0 (SI) | 1 (First) | 0 (Sequence) | 0 | 0 (NM) |
| Intermediate Data frame(s) | 0 | 0 | 1 | 0 | 0 | 0 (NM) |
| Last Data frame | 0 | 0 | 1 | 0 | 1 | 0 (retain Sequence Initiative) |
| Legend: NM - Not Meaningful | | | | | | |

## B.3 Sequence level protocol example

Sequence level protocol is illustrated with a three Sequence Exchange in figure B.4. The first Sequence is a “read” request. The second Sequence transfers the “data”. The third Sequence transfers “ending status” and ends the Exchange.

Frames 1,2, and 3 represent the first Sequence of an Exchange. In this example a Command Request for a Read operation is sent as a request Sequence. Note that Sequence Initiative is transferred to the Sequence Recipient.

Frames 4,5 and 6 represent the first, intermediate and last frames of the data transferred in response to the Read request. Note that the Sequence Initiative is retained in order to start a Sequence with ending status.

Copyright International Organization for Standardization
Provided by IHS under license with ISO
No reproduction or networking permitted without license from IHS Not for Resale

Frames 7,8 and 9 represent the ending status for the preceding data transfer and end the Exchange. Depending on the FC-4 Protocol, the Responder may not be allowed to end the Exchange, but transfer the Sequence initiative to the Originator to complete the Exchange.

**F_CTL usage**

Use of F_CTL bits for these example Sequences are shown in table B.3.

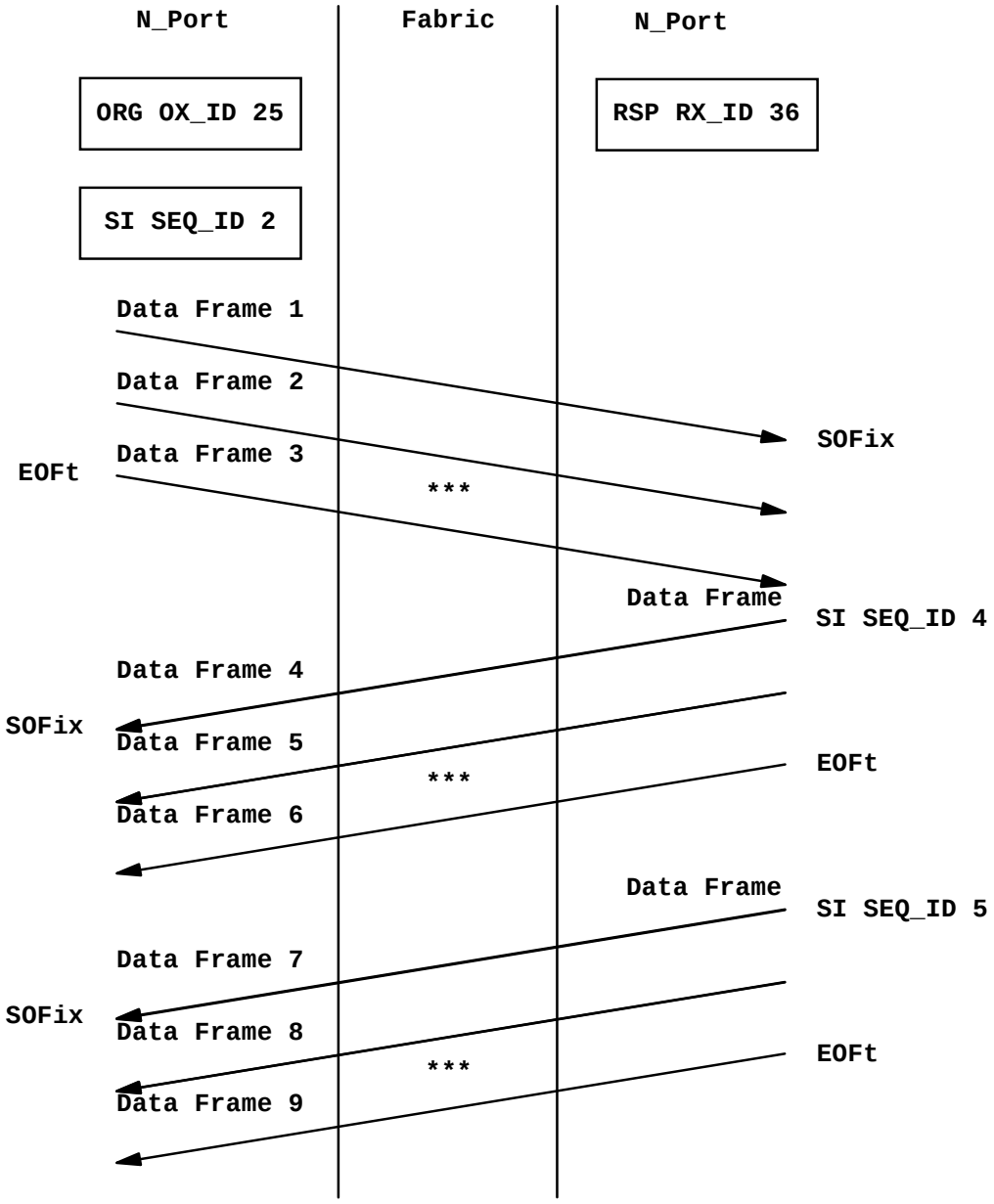


**Figure B.4 - Sequence level protocol example**

Copyright International Organization for Standardization
Provided by IHS under license with ISO
No reproduction or networking permitted without license from IHS
Not for Resale

**Table B.3 - Sequence level protocol example**

| Description | Exchange Context | Sequence Context | First Sequence of Exchange | Last Sequence of Exchange | End Sequence | Sequence transmit initiative |
|---|---|---|---|---|---|---|
| **F_CTL Bits** | **23** | **22** | **21** | **20** | **19** | **18** |
| First Data frame (SOFix) of the Exchange and of the first Sequence (a Read Request Sequence) | 0 | 0 | 1 | 0 | 0 | 0 (NM) |
| Intermediate Data frame of first sequence | 0 | 0 | 1 | 0 | 0 | 1 |
| Last Data frame of first Sequence | 0 | 0 | 1 | 0 | 1 | 1 |
| First Data frame (SOFix) of intermediate Sequence (Reply Sequence) | 1 | 0 | 0 | 0 | 0 | 0 (NM) |
| Intermediate Data frame of intermediate Sequence | 1 | 0 | 0 | 0 | 0 | 0 (NM) |
| Last Data frame of intermediate Sequence | 1 | 0 | 0 | 0 | 1 | 0 |
| First Data frame (SOFix) of the Last Sequence (Reply Status Sequence) | 1 | 0 | 0 | 1 | 0 | 0 (NM) |
| Intermediate Data frame of the Last Sequence | 1 | 0 | 0 | 1 | 0 | 0 (NM) |
| Last Data frame of the Last Sequence and of the Exchange | 1 | 0 | 0 | 1 | 1 | 0 |

## B.4 Class 1 and 6 frame level protocol example

N_Port Login is used as an example to illustrate Class 1 and 6 frame flow as shown in figure B.5.

Copyright International Organization for Standardization
Provided by IHS under license with ISO
No reproduction or networking permitted without license from IHS Not for Resale

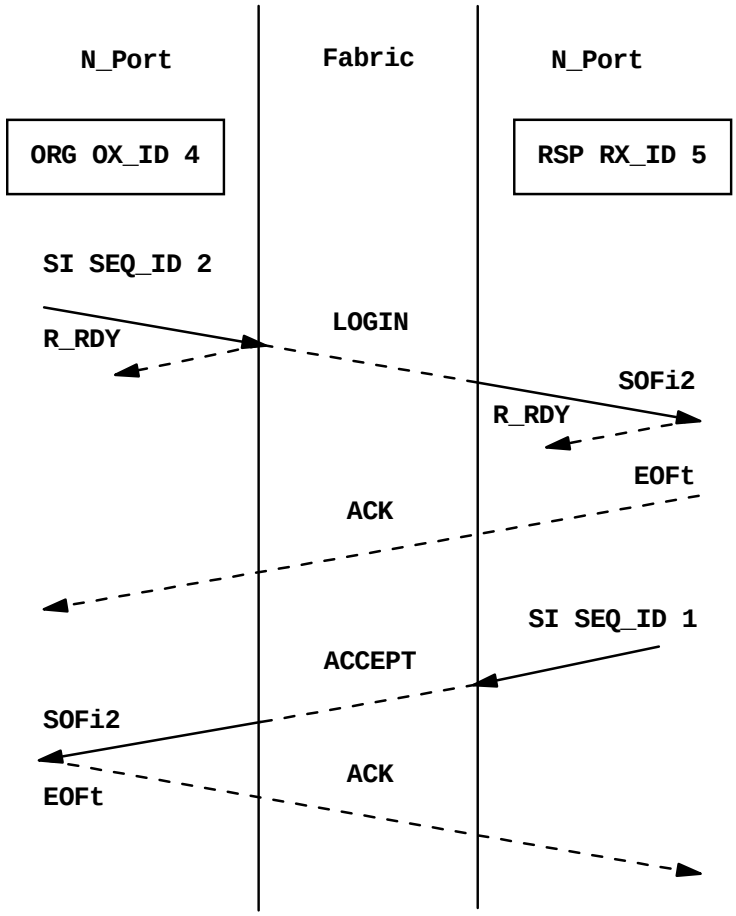


**Figure B.5 - Class 1 and 6 frame level protocol - Login example**

## B.5 Class 2 frame level protocol example

N_Port Login is used to illustrate Class 2 frame flow as shown in figure B.6.

--`,,```,,,,````-`-`,,`,,`,`,,`---

Copyright International Organization for Standardization
Provided by IHS under license with ISO
No reproduction or networking permitted without license from IHS Not for Resale

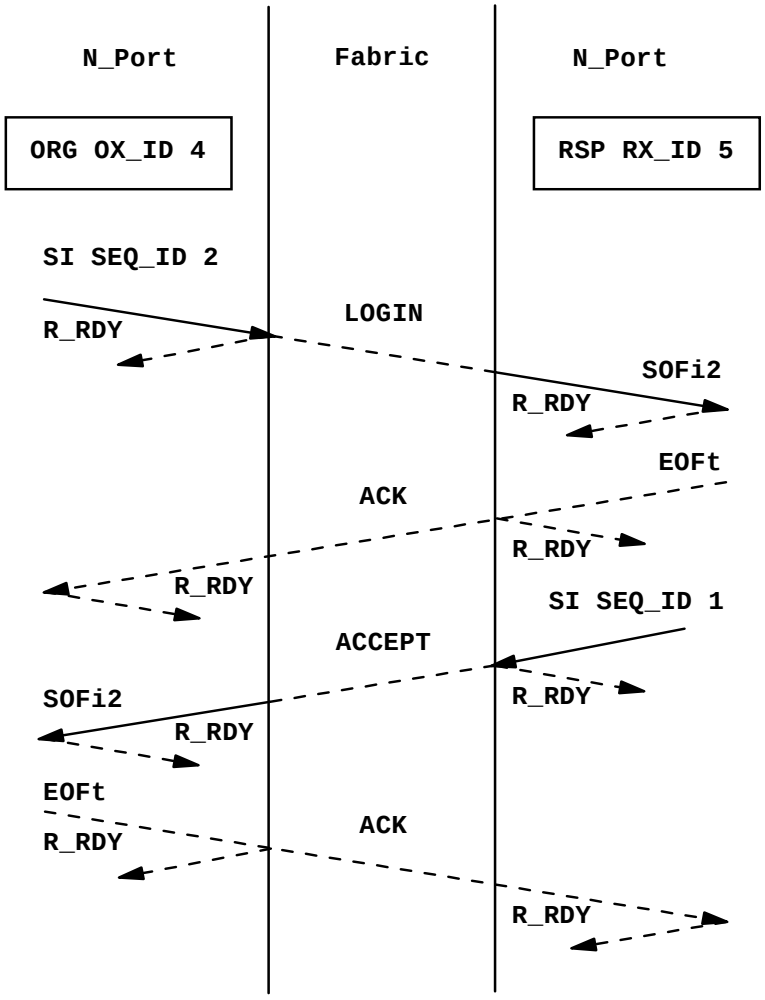


**Figure B.6 - Class 2 frame level protocol - Login example**

## B.6 Class 3 frame level protocol example

N_Port Login is used to illustrate Class 3 frame flow as shown in figure B.7.

--`,,```,,,,````-`-`,,`,,`,`,,`---

Copyright International Organization for Standardization
Provided by IHS under license with ISO
No reproduction or networking permitted without license from IHS Not for Resale

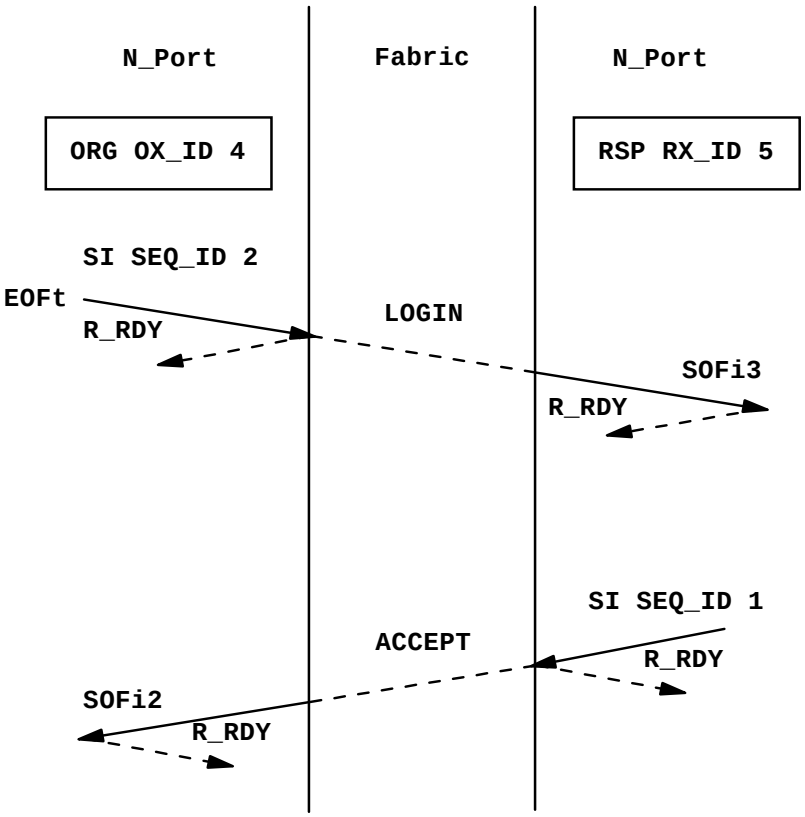


**Figure B.7 - Class 3 frame level protocol - Login example**

Copyright International Organization for Standardization
Provided by IHS under license with ISO
No reproduction or networking permitted without license from IHS
Not for Resale

# Annex C
(informative)

# Connection management applications

## C.1 Example cases

### C.1.1 Introduction

The following Cases represent examples of how a Class 1 and 6 Connection is removed using the Remove Connection procedure.

### C.1.2 Case 1

Table C.1 shows a Case where Nx_Port (A) transmits its last Sequence without Nx_Port (B) transmitting any Sequences.

**Table C.1 - Case 1**

| xmit E_C (A) | recv E_C (A) | Nx_Port Actions |
|---|---|---|
| 0 | 0 | A transmitting Sequences |
| 1 | 0 | A transmits last Data frame of last Sequence |
| 0 | 0 | A receives the ACK_1 to the last Data frame with $EOF_{dt}$ - Connection Removed |
| Legend:<br>A = this Nx_Port<br>B = other connected Nx_Port | | |

### C.1.3 Case 2

Table C.2 shows a Case where Nx_Port (A) completes its last Sequence before Nx_Port (B).

**Table C.2 - Case 2**

| xmit E_C (A) | recv E_C (A) | Nx_Port Actions |
|---|---|---|
| 0 | 0 | Both A and B transmitting Sequences |
| 1 | 0 | A transmits last Data frame of last Sequence |
| 0 | 0 | B completes Sequences in progress, A responds with Link_Continues |
| 0 | 1 | A receives the last Data frame of last Sequence from B |
| 0 | 0 | A transmits $EOF_{dt}$ on ACK_1 - Connection Removed |
| Legend:<br>A = this Nx_Port<br>B = other connected Nx_Port | | |

--`,,```,,,,````-`-`,,`,,`,`,,`---

Copyright International Organization for Standardization
Provided by IHS under license with ISO
No reproduction or networking permitted without license from IHS Not for Resale

### C.1.4 Case 3

Table C.3 shows a Case where Nx_Port (B) transmits its last Sequence before Nx_Port (A).

**Table C.3 - Case 3**

| xmit E_C (A) | recv E_C (A) | Nx_Port Actions |
|---|---|---|
| 0 | 0 | Both A and B transmitting Sequences |
| 0 | 1 | A receives last Data frame of last Sequence from B. |
| 0 | 0 | A complete Sequences in progress |
| 1 | 0 | A transmits last Data frame of last Sequences |
| 0 | 0 | A receives $EOF_{dt}$ on ACK_1 - Connection Removed |

Legend:
A = this Nx_Port
B = other connected Nx_Port

### C.1.5 Case 4

Table C.4 shows a Case where Nx_Port (A) transmits its last Data frame of its last Sequence simultaneously with receiving the last Data frame of Nx_Port (B)'s last Sequence.

**Table C.4 - Case 4**

| xmit E_C (A) | recv E_C (A) | Nx_Port Actions |
|---|---|---|
| 0 | 0 | Both A and B transmitting Sequences (A is Connection Initiator) |
| 1 | 0 | A transmits last Data frame of last Sequence. |
| 0 | 1 | A receives Data frame from B before receiving Link_Continue for its last Data frame with E_C = 1 |
| 0 | 0 | A waits for its Link_Continue response |
| 0 | 0 | A receives its ACK_1/ACK from B with EOF $SOF_{ix}$) |
| 0 | 0 | A transmits ACK_1 with EOF $SOF_{ix}$ - Connection Removed |

Legend:
A = this Nx_Port
B = other connected Nx_Port

## C.2 Ending sequence and Connection

Table C.5 shows an example of F_CTL Bit settings for key Data frames within an example Exchange.

The first Sequence is a “read” request. The second Sequence transfers the “data”. The third Sequence transfers “ending status” and ends the Exchange and terminates a Class 1 or Class 6 dedicated connection.

Copyright International Organization for Standardization
Provided by IHS under license with ISO
No reproduction or networking permitted without license from IHS Not for Resale

**Table C.5 - F_CTL for example Exchange**

| Description | Exc Owner | Seq Owner | First Seq of Exc | Last Seq of Exc | Last Seq Data frame | E_C | Seq xmit initiative |
|---|---|---|---|---|---|---|---|
| **Bits** | **23** | **22** | **21** | **20** | **19** | **18** | **16** |
| First Data frame of Exchange (SOFix) - a Read request (xmit) | 0 | 0 | 1 | 0 | 0 | 0 | 0 (NM) |
| Intermediate Data frame of first Sequence (xmit) | 0 | 0 | 1 | 0 | 0 | 0 | 0 (NM) |
| Last Data frame of first Sequence (xmit) | 0 | 0 | 1 | 0 | 1 | 0 | 1 |
| First Data frame of reply “data” Sequence (SOFix) (recv) | 1 | 0 | 0 | 0 | 0 | 0 | 0 (NM) |
| Last Data frame of reply data Sequence (recv) | 1 | 0 | 0 | 0 | 1 | 0 | 0 |
| First Data frame of reply Status Sequence (SOFix) (recv) | 1 | 0 | 0 | 1 | 0 | 0 | 0 (NM) |
| Last Data frame of Exchange (recv) | 1 | 0 | 0 | 1 | 1 | 1 | 1 |
| Last ACK_1 of Exchange (xmit) with EOFdt | 0 | 1 | 0 | 1 | 0 | 0 | 0 |

Frames 1,2, and 3 represent the first Sequence of an Exchange. In this example a Command Request for a Read operation is sent as a request Sequence. Note that Sequence Initiative is transferred to the Sequence Recipient.

Frames 4 and 5 represent the first and last frames of the data transfer associated with the Read operation. Note that the Sequence Initiative is retained in order to start a Sequence with ending status.

Frames 6 and 7 represent the ending status for the preceding data transfer and ends the Exchange. Frame 7 ends the Sequence, ends the Exchange, and requests termination of the Connection. The ACK_1 response to frame 7 (frame 8) removes the dedicated connection with EOFdt.

Copyright International Organization for Standardization
Provided by IHS under license with ISO
No reproduction or networking permitted without license from IHS Not for Resale

# Annex D
(informative)

# Out of order characteristics

## D.1 Introduction

This annex describes some of the implications of out of order transfer. There are two cases considered:

a) Out of order transfer of Data frames due to the inability of a Fabric to maintain order.
b) Out of order transmission of ACKs by an Nx_Port due to its buffer availability algorithms.

## D.2 Out of order Data frame delivery

Based on Fx_Port service parameters, the delivery of frames during Class 2 service may occur as:

a) “Misordered Delivery”. The destination Nx_Port receives frames in an order different than a source Nx_Port sent them (i.e., the Fabric does not maintain the ordering of the frames).
b) “Ordered Delivery”. The destination Nx_Port receives frames in the same order as the source Nx_Port sent them (i.e., the Fabric maintains the ordering of the frames).

The following is a discussion of the implications of misordered delivery of frames and class 2 Sequence recovery.

Misordered frame delivery may occur whenever there are multiple routes, within the Fabric, between two communicating Nx_Ports. When a Sequence is initiated, the individual frames of the Sequence are independently routed by the Fabric and, therefore, may take different routes through the Fabric, with some routes being longer or shorter than others. This may cause the misordered delivery of frames to the destination Nx_Port. Also, since each frame is independently routed, it is very difficult for the Fabric to purge, or flush from the Fabric, all the frames for a Sequence.

Because of the above, this standard has provided the following functions to aid in the detection and recovery of Sequences abnormally terminated due to time-out, e.g., because a frame was lost:

a) The R_A_TOV timeout to discard in transit frames (see 21.2.1.4); and
b) Establishment of a Recovery_Qualifier range for the duration of the R_A_TOV time (see 12.2.2.2.4).

These functions have several implications:

a) When an Nx_Port is initialized, it may not have knowledge of Sequences initiated prior to initialization, (e.g., an Nx_Port may be powered off after sending a Sequence, and then powered back on). Some (or all) frames of this prior Sequence may still be traversing the Fabric after the Nx_Port has been initialized. After initialization, an Nx_Port waits R_A_TOV time before it initiates any Sequences so that any duplicate frames in the Fabric are discarded (see 21.2.1.4)
b) The specification for Recovery_Qualifiers (see 12.2.2.2.4) implies that
   A) an Nx_Port maintains a list of Recovery_Qualifiers;
   B) entries are added to this list when a Sequence is abnormally terminated;
   C) entries are deleted from this list when R_A_TOV has expired for the entry; and
   D) the list is referenced prior to Sequence initiation to ensure that a Data frame that falls within a Recovery_Qualifier range is not transmitted.

Copyright International Organization for Standardization
Provided by IHS under license with ISO
No reproduction or networking permitted without license from IHS Not for Resale

c) If a subset of the entire Sequence_Qualifier (e.g., X_ID) is used to route and store incoming frames, a frame falling within the Recovery_Qualifier range may not be detected until after the frame is placed in a receive buffer and the frame header is validated. This has implications on credit and buffer management. The Sequence to which this frame belongs was abnormally terminated and all the credit for the Sequence was recovered. As a result, this frame is an “unexpected” frame that is not accounted for by the current credit management within the Nx_Port. Therefore, it may be occupying a buffer that a source Nx_Port believes is available. This may cause another frame to receive a P_BSY, even though the sender of the busied frame obeyed the credit rules.

## D.3 Out of order ACK transmission

The transmission of ACK frames in either Class 1, Class 2, or Class 6 service may occur as:

a) Misordered transmission. In this case, the Sequence Recipient is not acknowledging Data frames in the SEQ_CNT order, (i.e., the corresponding ACK frames are not being sent in SEQ_CNT order).
b) Ordered transmission. In this case, the Sequence Recipient is acknowledging Data frames in the SEQ_CNT order, (i.e., the corresponding ACK frames are being sent in SEQ_CNT order).

The implications of misordered transmission of ACKs and ordered transmission of ACKs are:

a) With misordered transmission, the credit for a lost ACK is not recovered until after a Sequence time-out is detected, (i.e., the credit is lost until the E_D_TOV time has expired).
b) With ordered transmission, the reception of an ACK recovers the credit for all Data frames with that SEQ_CNT or lower, regardless of whether previous ACKs were received. This is true regardless of whether the Fabric supports misordered delivery or ordered delivery.

Copyright International Organization for Standardization
Provided by IHS under license with ISO
No reproduction or networking permitted without license from IHS Not for Resale

# Annex E
(informative)

# Link Error Status Block

## E.1 Introduction

In this annex, guidelines are provided to manage the Link Error Status Block (see 21.8).

## E.2 Link failure counters

Four types of Link failures are recorded in individual counters in LESB. The Link failure counters are:

a) Link Failure Count (Word 0) (miscellaneous link errors)
b) Loss-of-Synchronization Count (Word 1) (confirmed and persistent sync. loss)
c) Loss-of-Signal Count (Word 2)
d) Primitive Sequence Protocol Error Count (Word 3)

**Link failure counters summary**

The conditions under that individual counter increments are summarized in table E.1 (see table E.1 and table 12 for specific state changes, related nomenclature, considerations and conditions).

## E.3 Invalid Transmission Word

The Invalid Transmission Word Counter (Word 4) increments, once for every Invalid Transmission Word received (see 5.3.3), except during the following conditions:

a) No Transmission Word errors are counted if the receiver is in the Loss-of-Synchronization state (see 6.1.6.2).
b) No Transmission Word errors are counted if the Port is in the OL2 State or the OL3 State (see 7.5.4).

## E.4 Invalid CRC Count

The Invalid CRC Count (Word 5) increments, once for every received frame that meets one of the following conditions:

a) The Port is in the Active State and the received frame's CRC is in error and the frame is either missing an EOF delimiter or the EOF delimiter is an $EOF_n$, $EOF_t$, or $EOF_{dt}$ (see 8.7.3).
b) The Port is in the Active State and the received frame's CRC is in error (see 8.7.3).

NOTE The frames received with $EOF_{ni}$, $EOF_{dti}$, or $EOF_a$ may be excluded from consideration.

Copyright International Organization for Standardization
Provided by IHS under license with ISO
No reproduction or networking permitted without license from IHS Not for Resale

**Table E.1 - Link Failure Counters and management**

| State | ACTIVE | LINK RECOVERY | | | LINK FAILURE | | OFFLINE | | |
|---|---|---|---|---|---|---|---|---|---|
| Input Event | IDLE RECV | LR XMIT | LR RECV | LRR RECV | NOS RECV | NOS XMIT | OLS XMIT | OLS RECV | WAIT OLS |
| Substate | (AC) | (LR1) | (LR2) | (LR3) | (LF1) | (LF2) | (OL1) | (OL2) | (OLS) |
| L >> LR | - | - | - | - | - | - | - | - | Wd 1⇑[a] (Ref. 17) |
| L >> LRR | Wd 1⇑[a] (Ref. 1) | - | - | - | - | - | - | - | Wd 1⇑[a] (Ref. 17) |
| L >> IDLES | - | - | - | - | - | - | - | - | - |
| L >> OLS | - | - | - | - | - | - | - | - | - |
| L >> NOS | Wd 0⇑ (Ref. 1) | Wd 0⇑ (Ref. 2) | Wd 0⇑ (Ref. 5) | Wd 0⇑ (Ref. 8) | - (Ref. 12) | -[b] (Ref. 11) | Wd 0⇑[c] (Ref. 20) | Wd 0⇑ (Ref. 15) | -[b] (Ref. 17) |
| Loss-of-Signal | Wd 2⇑ (Ref. 21) | Wd 2⇑ (Ref. 4) | Wd 2⇑ (Ref. 7) | Wd 2⇑ (Ref. 10) | Wd 2⇑ (Ref. 13) | - (Ref. 11) | - (Ref. 18) | - (Ref. 16) | - (Ref. 17) |
| Loss of Sync Limit | Wd 1⇑ (Ref. 21) | Wd 1⇑[d] (Ref. 4) | Wd 1⇑[d] (Ref. 7) | Wd 1⇑[d] (Ref. 10) | Wd 1⇑[d] (Ref. 13) | - (Ref. 11) | - (Ref. 18) | - (Ref. 16) | - (Ref. 17) |
| Event time-out (R_T_TOV) | - | Wd 0⇑ (Ref. 3) | Wd 0⇑ (Ref. 6) | Wd 0⇑ (Ref. 9) | Wd 0⇑ (Ref. 14) | - | - (Ref. 19) | - | - |

Legend:
L >> means receiving from the Link
A "-" (i.e., dash) entry means no change to counter
Ref. N means refer to the section listed near bottom of this table
Wd 0⇑ means increment Link Failure Counter (Word 0)
Wd 1⇑ means increment Loss-of-Synchronization Counter (Word 1)
Wd 2⇑ means increment Loss-of-Signal Counter (Word 2)
Wd 3⇑ means increment Primitive Sequence Protocol Error Counter (Word 3

| | | |
|---|---|---|
| Ref. 1 = 7.2 | Ref. 8 = 7.3.4 (a) | Ref. 15 = 7.5.3 (a) |
| Ref. 2 = 7.3.2 (a) | Ref. 9 = 7.3.4 (b) | Ref. 16 = 7.5.3 (b) |
| Ref. 3 = 7.3.2 (b) | Ref. 10 = 7.3.4 (c) | Ref. 17 = 7.5.4 |
| Ref. 4 = 7.3.2 (c) | Ref. 11 = 7.4.1 | Ref. 18 = 7.6.2 (a) |
| Ref. 5 = 7.3.3 (a) | Ref. 12 = 7.4.1 (a) | Ref. 19 = 7.6.2 (b) |
| Ref. 6 = 7.3.3 (b) | Ref. 13 = 7.4.1 (b) | Ref. 20 = 7.6.5 |
| Ref. 7 = 7.3.3 (c) | Ref. 14 = 7.4.1 (c) | Ref. 21 = 7.6.4 |

[a] Abnormal Link_Response from the attached Port
[b] A normal event if the Port is in loopback, or if the attached Port is in the OL3 State.
[c] Only increments if the condition occurs while performing the Online-to-Offline protocol.
[d] This condition does not occur, since the Event Time-out occurs first

Copyright International Organization for Standardization
Provided by IHS under license with ISO
No reproduction or networking permitted without license from IHS Not for Resale

# Annex F
(informative)

# Class 4 Examples

## F.1 Introduction

wo ladder diagrams illustrating the operation of a single Class 4 circuit is shown in figures F.1 and F.2. Both figures include details on how End-to-end and VC credit are managed. Figure F.1 shows how an Nx_Port request setup of a Class 4 circuit, the subsequent circuit establishment, followed by an activation and deactivation cycle. Figure F.2 shows the non-destructive collision of two activation requests, normal Class 4 frame and acknowledgment flow ending with the removal of the Class 4 circuit.

## F.2 Setup, activate and deactivate

The following describes in detail the frame and Class 4 Primitive Signal flow shown in figure F.1:

a) The Circuit Initiator, Nx_Port 'A', enters the Pending state and transmits a Quality of Service request (a) (QoSR) to the Quality of Service Facilitator (QoSF). The QoSF sets Fx_Port 'A' to the Pending state and builds two counter-directional virtual circuits across the Fabric, between Fx_Port 'A' and Fx_Port 'B', satisfying the QoS parameters.
b) The QoSF acknowledge (b) the receipt of the QoSR frame, if either Class 2 or 4 is used to request the Class 4 circuit setup.
c) Fx_Port 'B' enters the Pending state before the updated QoSR (c) frame is sent to Nx_Port 'B'. The QoSF determine which class to use to propagate the setup request. Nx_Port 'B' enters the Pending state and initialize the service parameters, including the credit environment when it processes the QoSR.
d) Nx_Port 'B' acknowledge (d) reception of the QoSR frame if the QoSF uses Class 2 or 4 to continue the Class 4 circuit setup process.
e) Nx_Port 'B' transmits a LS_ACC (e) frame, in response to the QoSR frame (c), once it is ready to proceed. The QoSF initialize the environment for the Class 4 circuit in response to the LS_ACC frame.
f) The QoSF acknowledge (f) reception of the LS_ACC if Class 2 or 4 was selected by the QoSF to complete setup of the Class 4 circuit.
g) When the Fabric environment have been initialized the QoSF return a LS_ACC (g) frame to Nx_Port 'A' in response to the initial setup request (a). Nx_Port 'A' initialize the service parameters, including the credit environment when it processes the LS_ACC.
h) Nx_Port 'A' acknowledge (h) receipt of the LS_ACC frame if Nx_Port 'A' selected Class 2 or 4 to request setup of the Class 4 circuit.
i) Fx_Port 'A' transmits a VC_RDY (i) and enters the Dormant state, when it is ready to accept an activation request. Nx_Port 'A' enters the Dormant state when it receives the VC_RDY and increases the VC credit limit and VC_Credit.
j) Fx_Port 'B' transmits a VC_RDY (j) and enters the Dormant state, when it is ready to accept an activation request. Nx_Port 'B' enters the Dormant state when it receives the VC_RDY and increases the VC credit limit and VC_Credit.
k) Fx_Port 'A' transmits a VC_RDY (k) advertising excess bandwidth. However, Nx_Port 'A' does not increase its VC_Credit when it receives the VC_RDY since VC_Credit already is at the VC_Credit limit.
l) Nx_Port 'B' transmits an activation request (l), consuming one EE_Credit and one VC_Credit. Transmission of the $SOF_{c4}$ delimited causes Nx_Port to enter the Live state. This also change the VC credit limit to 2, the Live VC credit limit. Fx_Port 'B' enters the Live state when it receives the $SOF_{c4}$ delimited activation frame. The frame then traverses the Fabric and is forwarded by Fx_Port 'A'. Fx_Port 'A' enters the Live state when it transmits the $SOF_{c4}$ delimiter. Nx_Port 'A' enters the Live state when it receives the activation frame. This also changes the VC credit limit to the Live VC credit limit.
m) Fx_Port 'B' transmit a VC_RDY (m) to replenish VC credit. Nx_Port 'B' increases VC_Credit when it receives the VC_RDY.

Copyright International Organization for Standardization
Provided by IHS under license with ISO
No reproduction or networking permitted without license from IHS Not for Resale

n) Fx_Port 'B' transmit a VC_RDY (n) to replenish VC credit. Nx_Port 'B' increases VC_Credit when it receives the VC_RDY.
o) Fx_Port 'A' transmit a VC_RDY (o) to replenish VC credit. Nx_Port 'A' increases VC_Credit when it receives the VC_RDY.
p) Fx_Port 'A' transmit a VC_RDY (p) to replenish VC credit. However, Nx_Port 'A' does not increase VC_Credit since VC_Credit already is at the VC credit limit.
q) Nx_Port 'B' transmits a Data frame (q) consuming one EE_Credit and one VC_Credit. The frame is received by Fx_Port 'B', traverses the Fabric, is forwarded by Fx_Port 'A' and is received by Nx_Port 'A'. Nx_Port 'A' later acknowledge (w) the frame reception.
r) Nx_Port 'B' transmits its last Data frame (r) to the Sequence initiated by (l) requesting deactivation of the Class 4 circuit. This consumes one EE_Credit and one VC_Credit. The frame is received by Fx_Port 'B', traverses the Fabric, is forwarded by Fx_Port 'A' and is received by Nx_Port 'A'. Nx_Port 'A' later acknowledge (x) and honor the deactivation request.
s) Nx_Port 'A' acknowledge reception of the activation frame (l) by transmitting an ACK frame (s), consuming one VC_Credit. The ACK frame is received by Fx_Port 'A', traverses the Fabric, is forwarded by Fx_Port 'B' and is received by Nx_Port 'B'. Nx_Port 'B' reclaim one EE_Credit on receipt of the ACK frame.
t) Fx_Port 'A' transmit a VC_RDY (f) to replenish VC credit. Nx_Port 'A' increases VC_Credit when it receives the VC_RDY.
u) Fx_Port 'B' transmit a VC_RDY (u) to replenish VC credit. Nx_Port 'B' increases VC_Credit when it receives the VC_RDY.
v) Fx_Port 'B' transmit a VC_RDY (v) to replenish VC credit. Nx_Port 'B' increases VC_Credit when it receives the VC_RDY.
w) Nx_Port 'A' acknowledge reception of the Data frame (q) by transmitting an ACK frame (w), consuming one VC_Credit. The ACK frame is received by Fx_Port 'A', traverses the Fabric, is forwarded by Fx_Port 'B' and is received by Nx_Port 'B'. Nx_Port 'B' reclaim one EE_Credit on receipt of the ACK frame.
x) Nx_Port 'A' acknowledge reception of Data frame (r) by transmitting an ACK frame (x), consuming one VC_Credit. Nx_Port 'A' elects to honor the deactivation request made by Nx_Port 'B'. The $EOF_{dt}$ delimited ACK frame is received by Fx_Port 'A', traverses the Fabric, is forwarded by Fx_Port 'B' and is received by Nx_Port 'B'. Nx_Port 'A' enters the Dormant state when it transmits the $EOF_{dt}$ delimiter, Fx_Port 'A' enters the Dormant state when it receives the $EOF_{dt}$ delimiter, Fx_Port 'B' enters the Dormant state when it transmit the $EOF_{dt}$ delimiter and Nx_Port 'B' enters the Dormant state when it receives the $EOF_{dt}$ delimiter. Nx_Port 'B' re-initializes EE_Credit on receipt of the ACK frame since the Class 4 dedicated circuit is now Dormant.
y) Fx_Port 'B' transmit a VC_RDY (y) to replenish VC credit. However, Nx_Port 'B' does not increase VC_Credit since VC_Credit already is at the VC credit limit.
z) Fx_Port 'A' transmit a VC_RDY (z) to replenish VC credit. Nx_Port 'A' increases VC_Credit when it receives the VC_RDY.

## F.3 Activation collision and removal

The following describes in detail the frame and Class 4 Primitive Signal flow shown in figure F.2:

a) Nx_Port 'A' transmits an activation request (a), consuming one EE_Credit and one VC_Credit, causing Nx_Port 'A' to enter the Live state from the Dormant sate. This also changes the VC_Credit limit to the Live VC credit limit. Fx_Port 'A enters the Live state when it receives the $SOF_{c4}$ delimited activation frame. The frame then traverses the Fabric and is forwarded by Fx_Port 'B'. However, Fx_Port 'B' is already in the Live state, due to the reception of an $SOF_{c4}$ delimited frame (b) transmitted by Nx_Port 'B'. Nx_Port 'B' receives the $SOF_{c4}$ delimited activation frame and later acknowledge it (m).
b) Nx_Port 'B' consumes one EE_Credit and one VC_Credit when it transmits the activation frame (b). Transmitting the activation frame causes Nx_Port 'B' to enter the Live state and increases the VC credit limit. Fx_Port 'B' enters the Live state when it receives the activation frame. This frame then transverses the Fabric and is forwarded by Fx_Port 'A' to Nx_Port 'A'. Nx_Port 'A' later acknowledge (j) reception of the $SOF_{c4}$ delimited activation frame other Fx_Port 'A' and Nx_Port 'A' remain in the Live state.
c) Fx_Port 'A' transmits a VC_RDY (c) to replenish VC credit. Nx_Port 'A' increases VC_Credit when it receives the VC_RDY.

Copyright International Organization for Standardization
Provided by IHS under license with ISO
No reproduction or networking permitted without license from IHS Not for Resale

d) Fx_Port ’B’ transmits a VC_RDY (d) to replenish VC credit. Nx_Port ’B’ increases VC_Credit when it receives the VC_RDY.
e) Fx_Port ’A’ transmits a VC_RDY (e) to replenish VC credit. Nx_Port ’A’ increases VC_Credit when it receives the VC_RDY.
f) Fx_Port ’B’ transmits a VC_RDY (f) to replenish VC credit. Nx_Port ’B’ increases VC_Credit when it receives the VC_RDY.
g) Nx_Port ’A’ transmits its last Data frame (g) requesting removal of the Class 4 circuit, consuming one EE_Credit and one VC_Credit. The frame is received by Fx_Port ’A’, traverses the Fabric, is forwarded by Fx_Port ’B’ and is received by Nx_Port ’B’. Nx_Port ’B’ later honor the removal request when it acknowledges (r) the Data frame.
h) Nx_Port ’B’ transmits its last Data frame (h) to the Sequence initiated by (b). This consumes one EE_Credit and one VC_Credit. The frame is received by Fx_Port ’B’, traverses the Fabric, and is forwarded by Fx_Port ’A’ before Nx_Port 'A' receives it. Nx_Port ’A’ later acknowledge the frame reception (l).
i) Fx_Port ’B’ transmits a VC_RDY (i) to replenish VC credit. Nx_Port ’B’ increases VC_Credit when it receives the VC_RDY.
j) Nx_Port ’A’ acknowledge reception of Data frame (b) by transmitting an ACK frame (j), consuming one VC_Credit. The ACK frame is received by Fx_Port ’A’, traverses the Fabric, is forwarded by Fx_Port ’B’ and is received by Nx_Port ’B’. Nx_Port ’B’ reclaim EE_Credit on receipt of the ACK frame.
k) Fx_Port ’A’ transmits a VC_RDY (k) to replenish VC credit. Nx_Port ’A’ increases VC_Credit when it receives the VC_RDY.

Copyright International Organization for Standardization
Provided by IHS under license with ISO
No reproduction or networking permitted without license from IHS Not for Resale

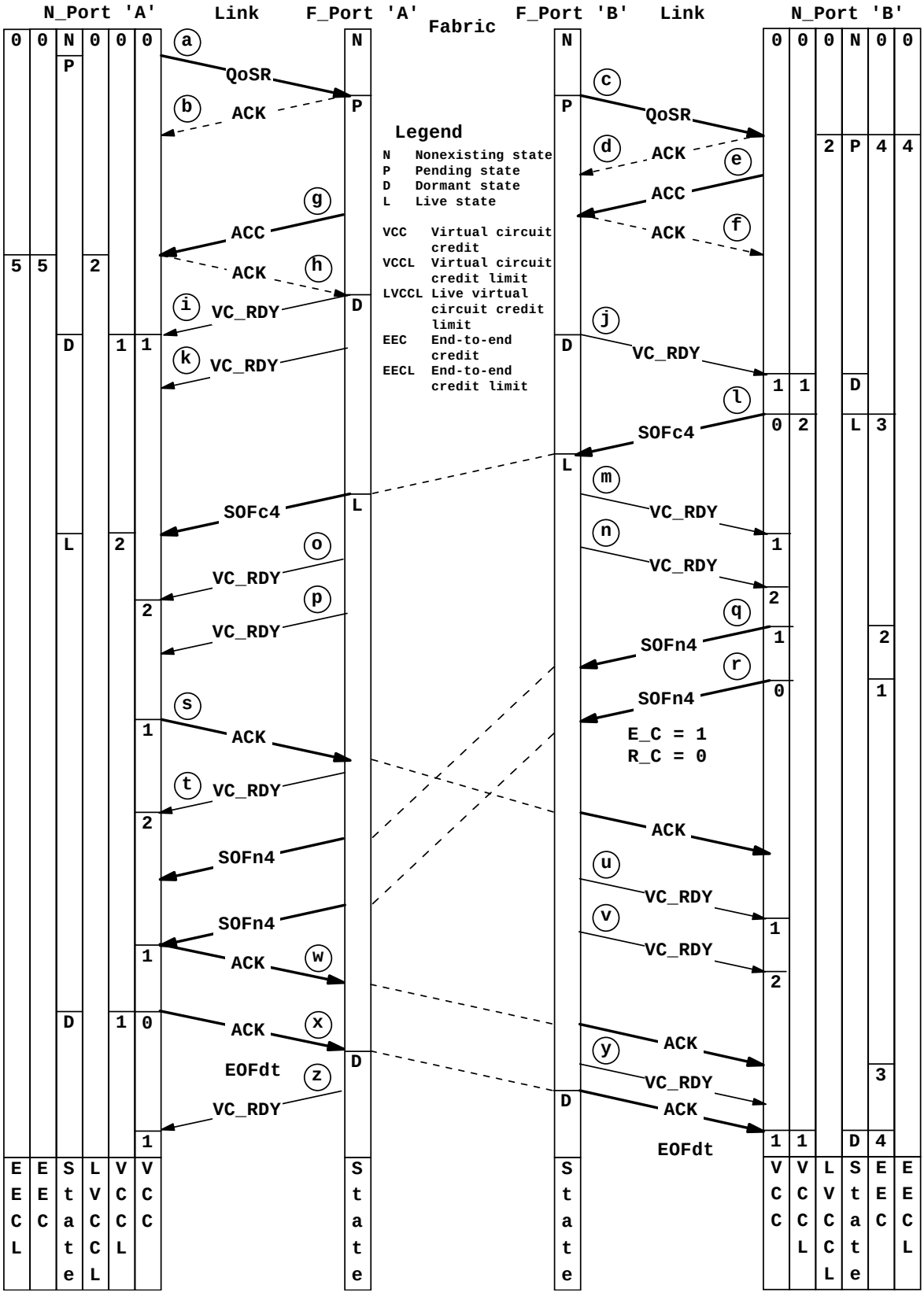


**Figure F.1 - Class 4 setup, activation and deactivation**

Copyright International Organization for Standardization
Provided by IHS under license with ISO
No reproduction or networking permitted without license from IHS
Not for Resale

l) Nx_Port 'A' acknowledge reception of Data frame (h) by transmitting an ACK frame (l), consuming one VC_Credit. The ACK frame is received by Fx_Port 'A', traverses the Fabric, is forwarded by Fx_Port 'B' and is received by Nx_Port 'B'. Nx_Port 'B' reclaim EE_Credit on receipt of the ACK frame.
m) Nx_Port 'B' acknowledge reception of Data frame (a) by transmitting an ACK frame (m), consuming one VC_Credit. The ACK frame is received by Fx_Port 'B', traverses the Fabric, is forwarded by Fx_Port 'A' and is received by Nx_Port 'A'. Nx_Port 'A' reclaim EE_Credit on receipt of the ACK frame.
n) Fx_Port 'A' transmits a VC_RDY (n) to replenish VC credit. Nx_Port 'A' increases VC_Credit when it receives the VC_RDY.
o) Fx_Port 'A' transmits a VC_RDY (o) to replenish VC credit. Nx_Port 'A' increases VC_Credit when it receives the VC_RDY.
p) Fx_Port 'B' transmits a VC_RDY (p) to replenish VC credit. Nx_Port 'B' increases VC_Credit when it receives the VC_RDY.
q) Fx_Port 'B' transmits a VC_RDY (q) to replenish VC credit. However, Nx_Port 'B' does not increase its VC_Credit when it receives the VC_RDY since VC_Credit is already at the VC credit limit.
r) Nx_Port 'B' acknowledge reception of Data frame (g) by transmitting an ACK frame (r), consuming one VC_Credit. Nx_Port 'B' elects to honor the removal request made by Nx_Port 'A'. The EOFrt delimited ACK frame is received by Fx_Port 'B', traverses the Fabric, is forwarded by Fx_Port 'A' and is received by Nx_Port 'A'. Nx_Port 'B' enters the Nonexisting state when it transmits the EOFrt delimiter, Fx_Port 'B' enters the Nonexisting state when it receives the EOFrt delimiter, Fx_Port 'A' enters the Nonexisting state when it transmit the EOFrt delimiter and Nx_Port 'A' enters the Nonexisting state when it receives the EOFrt delimiter. Nx_Port 'A' do not reclaim EE_Credit on receipt of the ACK frame since the Class 4 dedicated circuit is now nonexistent. However, Nx_Port 'A' final Sequence still completes successfully.
s) Fx_Port 'A' transmits a VC_RDY (s) to replenish VC credit. However, Nx_Port 'A' does not increase its VC_Credit when it receives the VC_RDY since VC_Credit is already at the VC credit limit.

--`,,```,,,,````-`-`,,`,,`,`,,`---

Copyright International Organization for Standardization
Provided by IHS under license with ISO
No reproduction or networking permitted without license from IHS Not for Resale

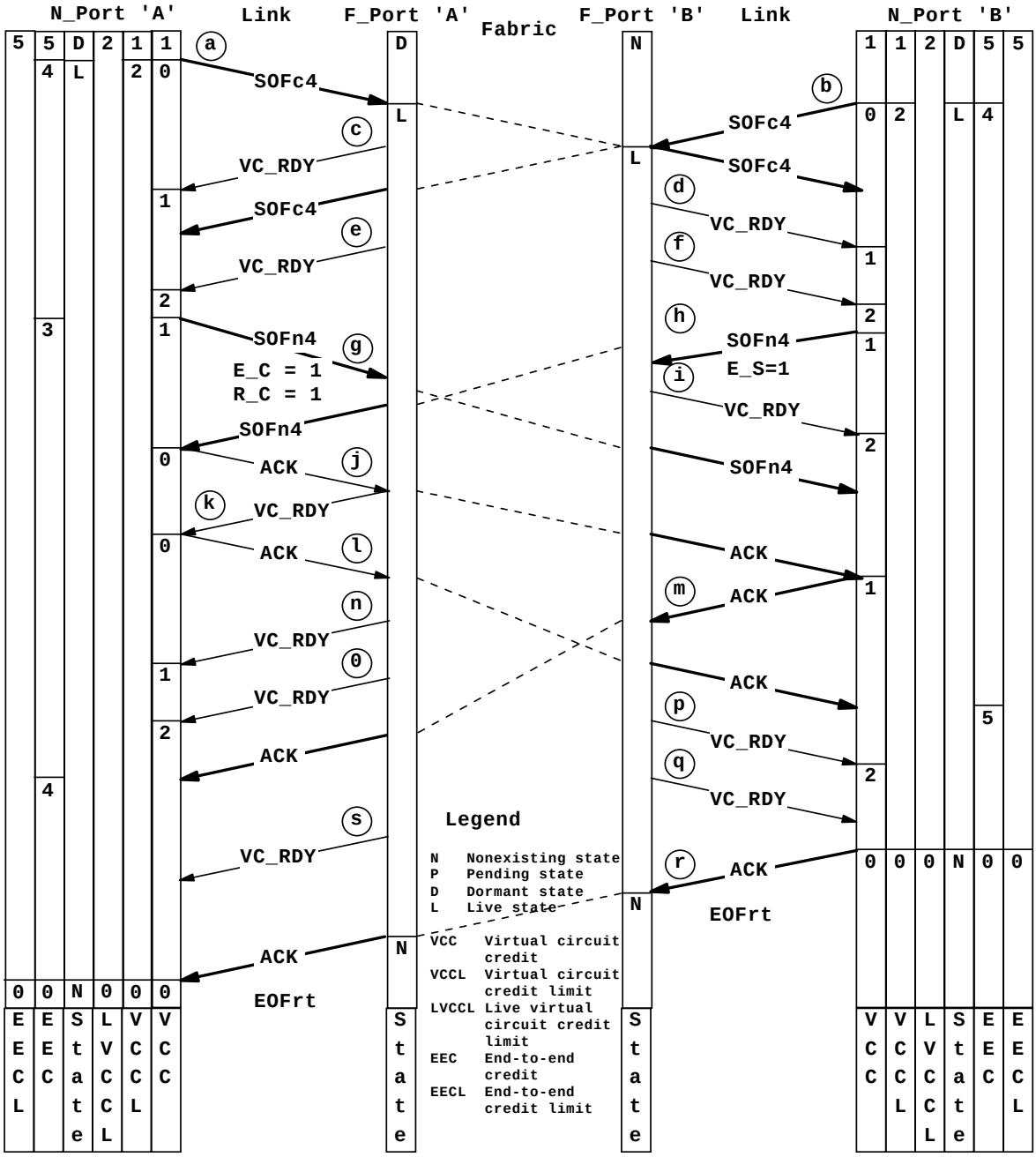


**Figure F.2 - Class 4 activation collision and circuit removal**

--`,,```,,,,````-`-`,,`,,`,`,,`---

Copyright International Organization for Standardization
Provided by IHS under license with ISO
No reproduction or networking permitted without license from IHS
Not for Resale

# Annex G
(informative)

# Priority and Preemption

## G.1 Overview

Real-time systems require interconnect networks that provide guaranteed bandwidth, guaranteed in-order delivery, and guaranteed latency. To meet these requirements, an interconnect network that resolves access contention using priority and preemption is desired.

A priority value in the Fibre Channel frame header (see 9.5.3) is defined (Word 1 Bits 31 to 25) and may be used by a Fabric to resolve contention when forwarding frames or requesting Dedicated Connections. A 7-bit field is defined since this size enables efficient implementations of the Rate Monotonic Scheduling Algorithm.

Preemption in the context of a Fibre Channel Fabric is the act of terminating an established dedicated connection (Class1 or Class 6) so as to forward higher priority frames or to establish new higher priority dedicated connections. The act of preempting an existing dedicated connection is completed ensuring that complete frames are transmitted and received with link integrity maintained.

## G.2 Preemption Process

A preemption is initiated when a preemption request frame (SOFx with preemption flag set to one, (defined in 9.5.3 15.6.5.4.5) is forwarded to the Fabric by an unconnected Nx_Port. The preemption request results in

1) the preemption of an existing dedicated connection,
2) the forwarding of frames or the establishment of a dedicated connection between the preemptor Nx_Port and the desired destination(s) Nx_Port(s) (the preemption destination(s)), or
3) rejection of the preemption request by the Fabric. In a real-time application, rejection by the Fabric might be due to a priority value that is too low.

The process for performing a preemption is as follows:

Upon receipt of a request submitted by an upper level to initiate a connection using preemption, the FC-2 protocol attempts to establish a connection using the SOFx, with the preemption flag set to one, preemption request frame. In figure G.1, the preemptor P is sending a preemption request frame (SOFx with preemption flag set to one) to the Fabric.

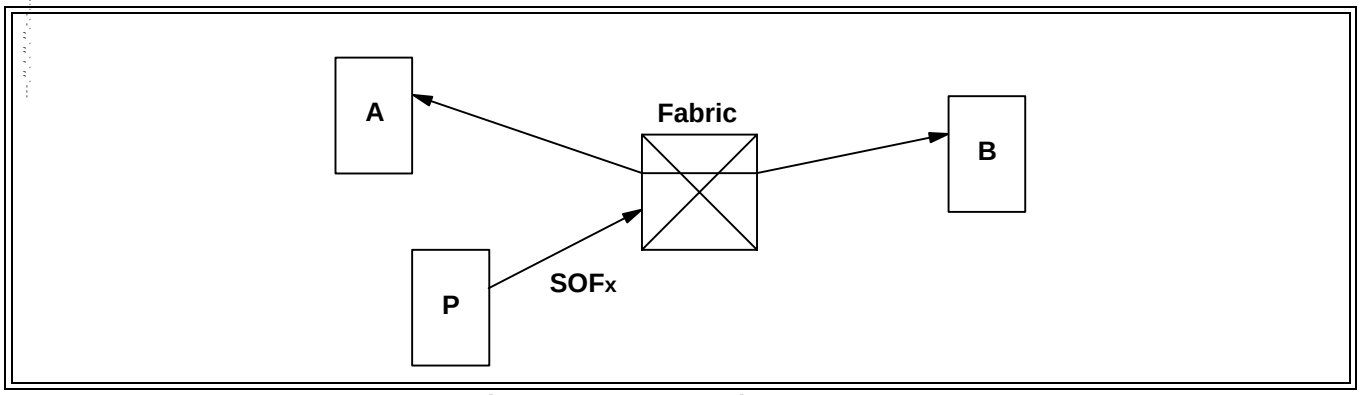


**Figure G.1 - Preemption Request**

Copyright International Organization for Standardization
Provided by IHS under license with ISO
No reproduction or networking permitted without license from IHS
Not for Resale

If the Fabric denies the request the Fabric returns a F_RJT Link_Response frame with a “Preempt request rejected” reason code (see 11.2.3.4.3.31) to the preemptor with no other effects on the Fabric (see figure G.2). No connections are changed if the Fabric rejects a preemption request.

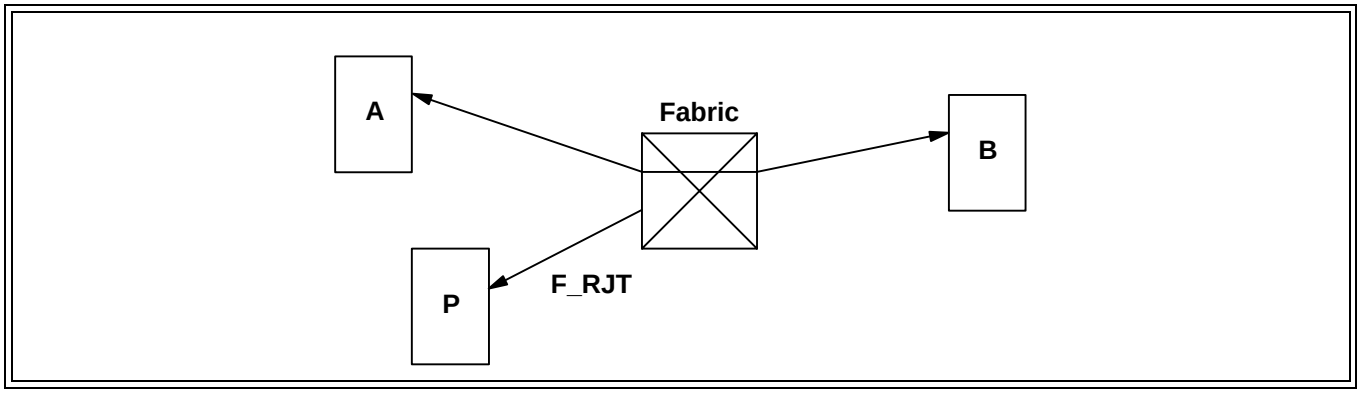


**Figure G.2 - Connection Rejection**

If the Fabric accepts the request, the Fabric terminates the connection(s) being preempted (A to B) and forwards a PRMT basic link service command (see 12.2.7) to both the preempted Connection Initiator and recipient. Ports A and B now know they have abnormally terminated sequences to manage. To facilitate connection termination, the Fabric may initiate a Link Reset (see 7.6.3) to both the preempted and Connection Initiator and recipient (A and B) after forwarding the PRMT, as shown in figure G.3.

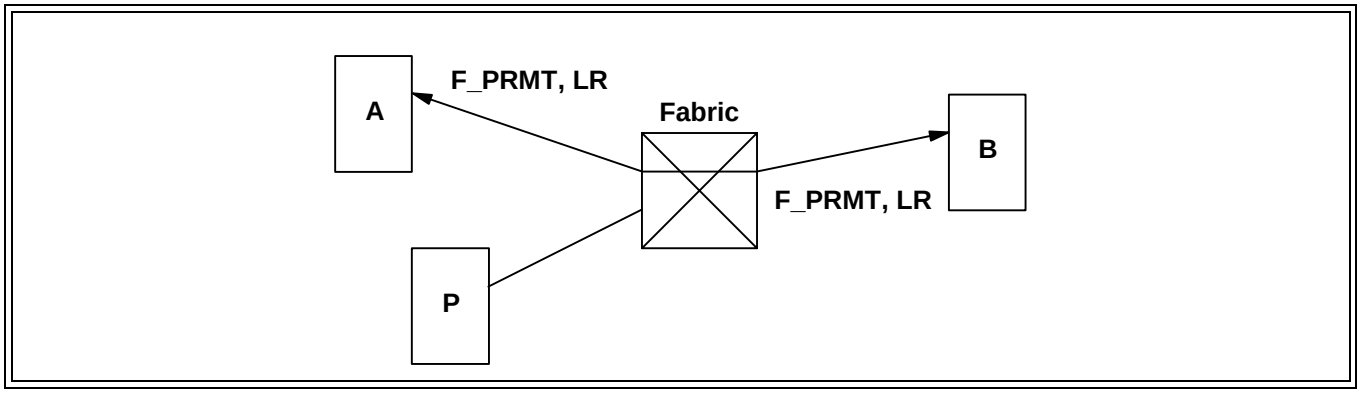


**Figure G.3 - Preemption Accepted**

The Fabric then forwards frames or establishes a new connection (P to B) by forwarding the SOFx preemption request frame to the preemption destination (B) as shown in figure G.4. If establishing a new dedicated connection, it is established when the preemptor (P) receives the acknowledge frame from the preemption destination Nx_Port (B).

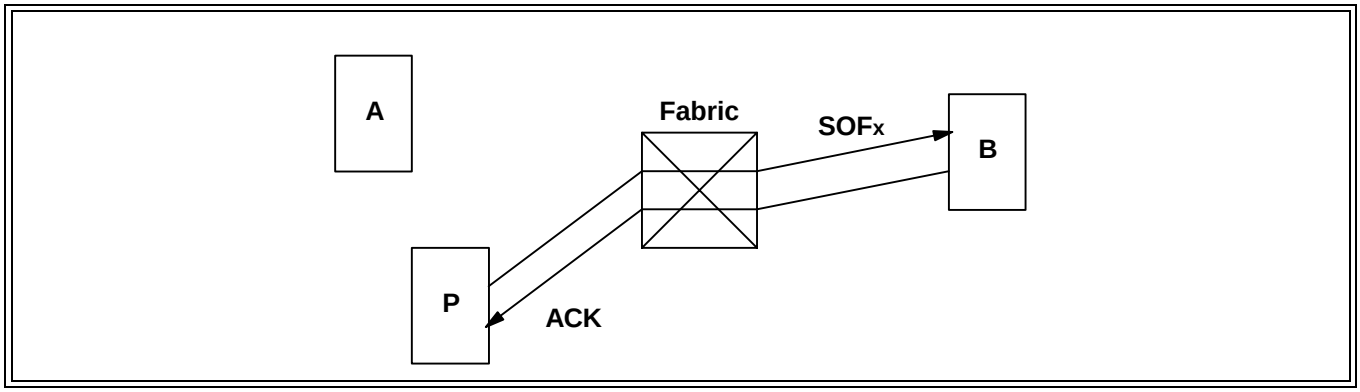


**Figure G.4 - Connection Established**

Copyright International Organization for Standardization
Provided by IHS under license with ISO
No reproduction or networking permitted without license from IHS
Not for Resale

## G.3 Link Reset Protocol

The link reset protocol, as defined in 7.6.3, follows the process outlined figure G.5 when used for preemption. The "Time-out" period is specified as the R_T_TOV value (see 21.2.1.2) for detection of Loss-of-Synchronization (see 6.1.5.2). To guarantee timely progress through the preemption sequence the following delays should be specified by the application layer profile.

a) P_T_LR, Preempt Connection state to Transmit LR
b) R_T_LRR, Received LR to Transmit LRR
c) R_T_ID, Received LRR to Transmit Idles

Reasonable values for these event delays are dependent on the application that is using preemption. A rule of thumb that could be useful might be:

The sum of P_T_LR, R_T_LRR, and R_T_ID should be equal to n times the Class 1 connection setup latency. Where the Class 1 connection setup latency is the time from when the Connection Initiator forwarded the $SOF_{c1}$ to when the Connection Recipient detects reception of the $SOF_{c1}$. The value of n is dependent on the application environment. High performance environments should use a small value of n (~1 or 2), other environments may function with a value much larger.

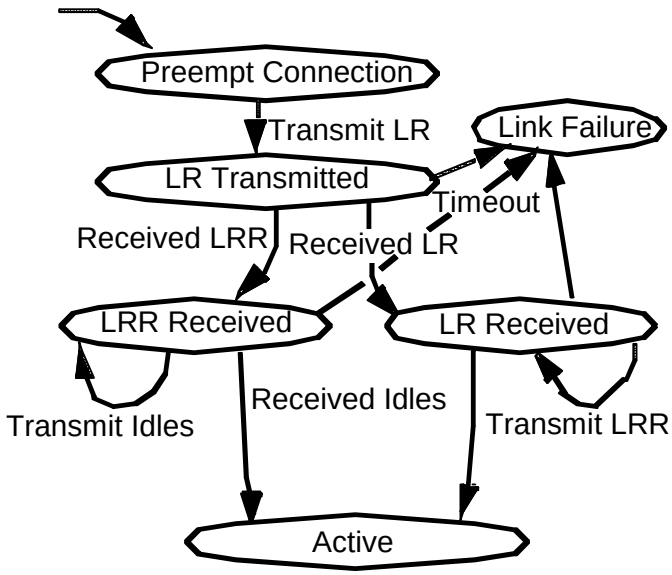


**Figure G.5 - Link Reset Diagram**

Copyright International Organization for Standardization
Provided by IHS under license with ISO
No reproduction or networking permitted without license from IHS
Not for Resale

# Annex H
(informative)

# Clock Synchronization

## H.1 Introduction

The goal of the Clock Synchronization Service described in clause 27 is to provide each participating node with a continuously-running counter that, at all times, contains exactly the same value that is found in the counter in every other participating node. Clause 27 provides the message definitions and formats required to accomplish this goal in an interoperable way. But the extent to which the value in a given node's counter actually matches the value in any other node's counter is dependent on the techniques used to implement the elements described in clause 27.

For systems with low accuracy requirements, the CSU ELS frames could be handled in software with no special hardware/firmware support. The client software could use any existing timer resources to maintain its local version of the counter. For systems that require the higher levels of accuracy, dedicated hardware assistance would be needed.

It is the purpose of this annex to present several possible hardware implementations and to discuss the sources of error in each of them.

Clause 27 defines two separate mechanisms for transfer of the synchronizing information -- the ELS method and the Primitive Signal method. This annex addresses only the ELS method.

## H.2 Discussion

### H.2.1 Introduction

The approach used is to first present a basic model of an NL_Port, in order to give a context for the rest of the discussion. Then basic hardware-based implementations for each topology is presented along with a discussion of the various sources of error and approaches for reducing these errors. The topologies discussed include point-to-point (see H.2.4), fabric (see H.2.5), and loop (see H.2.6).

### H.2.2 A Model of an NL_Port

Figure H.1 presents a model of a generic NL_Port that is used as the basis for the discussions in this annex. The elasticity buffer in the receive path and the multiplexer in the transmit path exist to support the operation of the port in an Arbitrated Loop topology. The remainder of the components support all topologies. For purposes of this annex, the interaction of the host with the port logic occurs entirely through data structures in the port's Memory that the host accesses via the Host Bus.

As Transmission Words are received, they pass through a Deserializer/Decoder (Des/Decode), and are checked for validity and for the various types of frame delimiters (CRC/Valid). Valid frames destined for the local node are pushed onto the Receive FIFO. From the Receive FIFO, frames are stored as data structures in the Memory. The host is informed of the presence of incoming frames via an unspecified mechanism, and the data is then transferred to the host via the host bus.

For outgoing data, the host and the port cooperate (in an unspecified manner) to cause the outgoing frames to be placed into the port's Memory. From there, the frames are transferred into the Trans FIFO. The frames are sent through the CRC logic, the multiplexer, and the encoder/serializer logic and onto the link. The CRC logic calculates the CRC value that is placed in the outgoing frame at the appropriate location.

For Arbitrated Loop operation, a port that is in neither the OPEN nor the OPENED state, incoming Transmission

Copyright International Organization for Standardization
Provided by IHS under license with ISO
No reproduction or networking permitted without license from IHS Not for Resale

Words are sent directly from the Elasticity buffer to the multiplexer and out onto the link via the encoder/serializer logic.

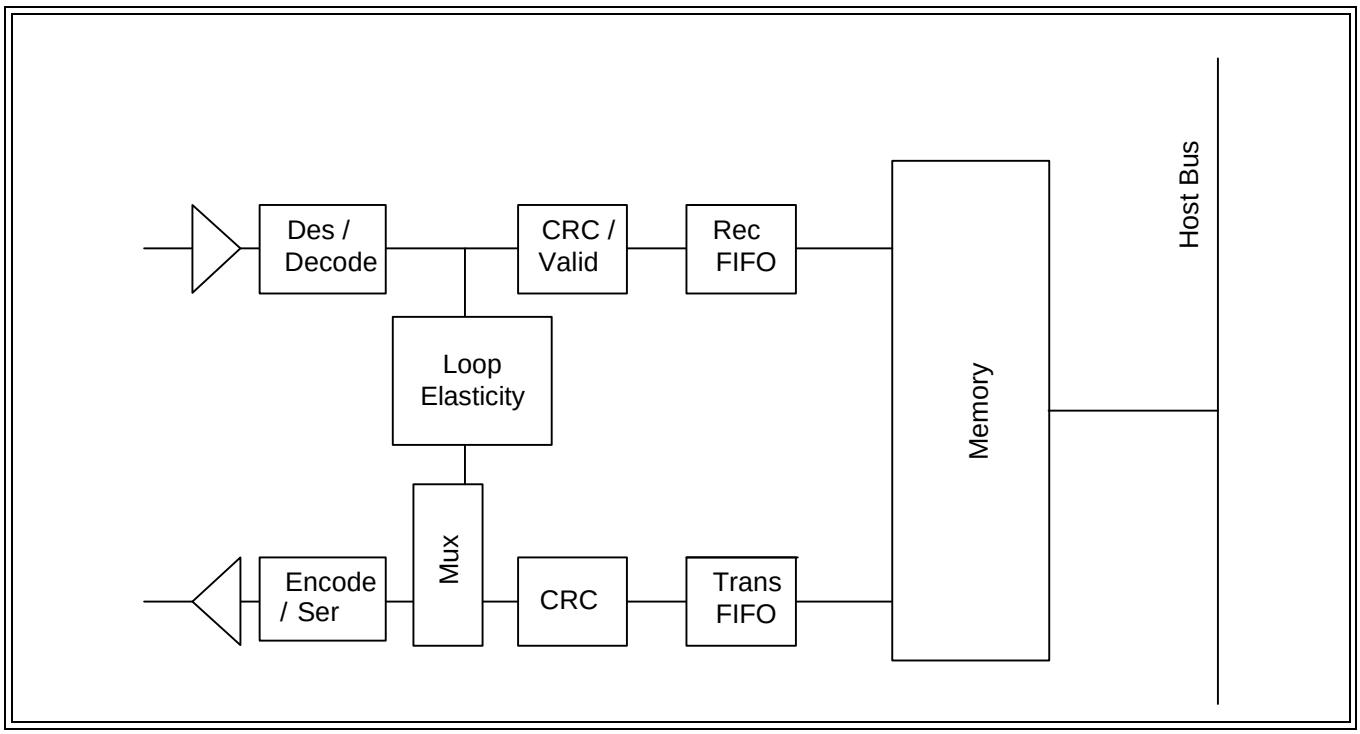


**Figure H.1 - Generic NL_Port**

### H.2.3 Hardware-Assisted Clock Synchronization

Figure H.2 shows the location of the Clock Sync circuitry that supports the Server. Figure H.3 shows the location of the corresponding circuitry that supports the Client.

For the Server, the Host Bus connection allows the loading of an initial value into the master clock. The Server periodically sends the master clock value to the clients in a CSU ELS frame. A multiplexer at the input to the CRC logic allows the CSU frame to bypass the Transmit FIFO, thereby eliminating unnecessary delays caused by other traffic.

For the Client (see figure H.3), the Clock Sync circuitry receives the CSU ELS frame prior to the Receive FIFO, thereby eliminating unnecessary delays caused by other traffic. The Host Bus connection allows application software to access the clock sync value. Note that for highest accuracy in applying time tags, the clock sync value should be accessed directly by hardware (i.e., without software intervention).

Figures H.4 and H.5 show an implementation of the Clock Sync logic for the Server and the Client, respectively. These represent a very basic implementation.

### H.2.4 A Point-to-Point System

#### H.2.4.1 Introduction

Although a simple point-to-point topology may not be of great practical interest, it is discussed first because it simplifies the discussion of the errors involved. All of the errors discussed in this section are applicable to all topologies. For reference in the following discussions, figure H.6 shows the Clock Synchronization model from 27.2 with the Fabric removed.

Copyright International Organization for Standardization
Provided by IHS under license with ISO
No reproduction or networking permitted without license from IHS Not for Resale

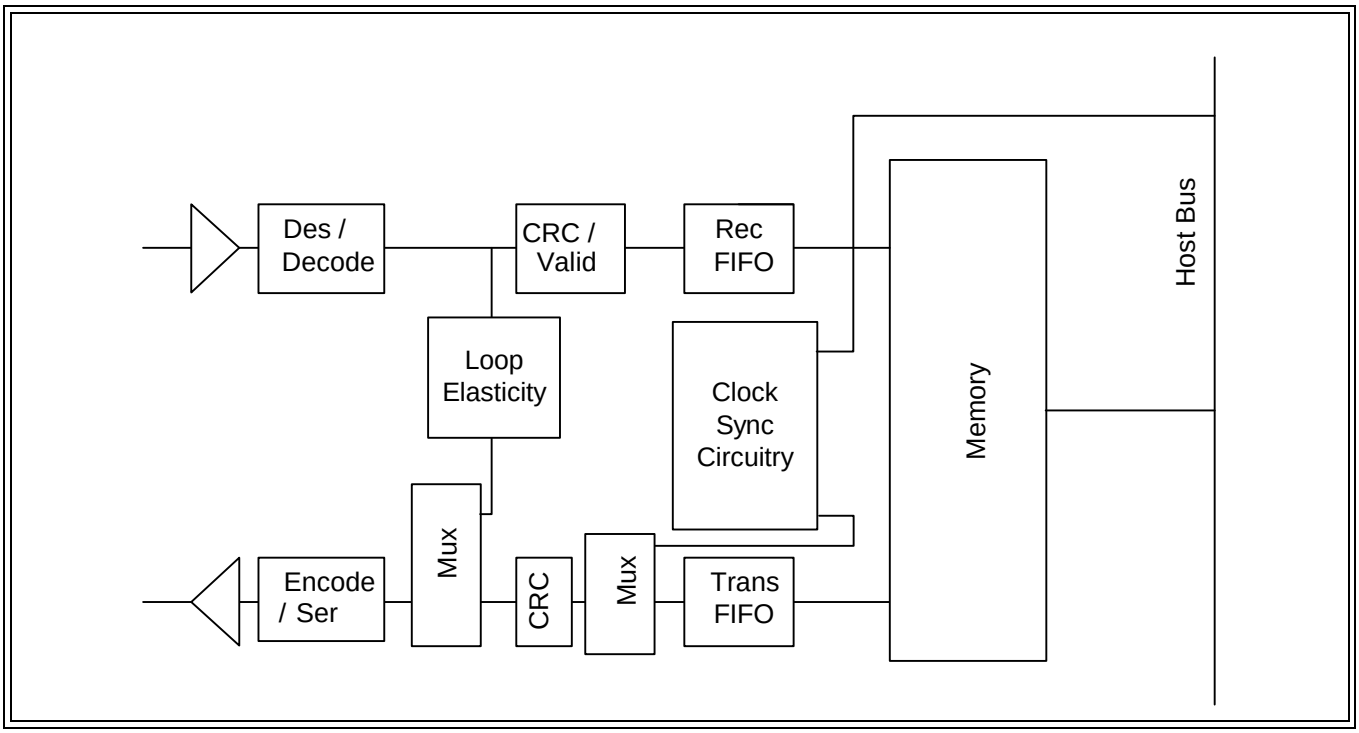


**Figure H.2 - Server NL_Port Clock Sync Context**

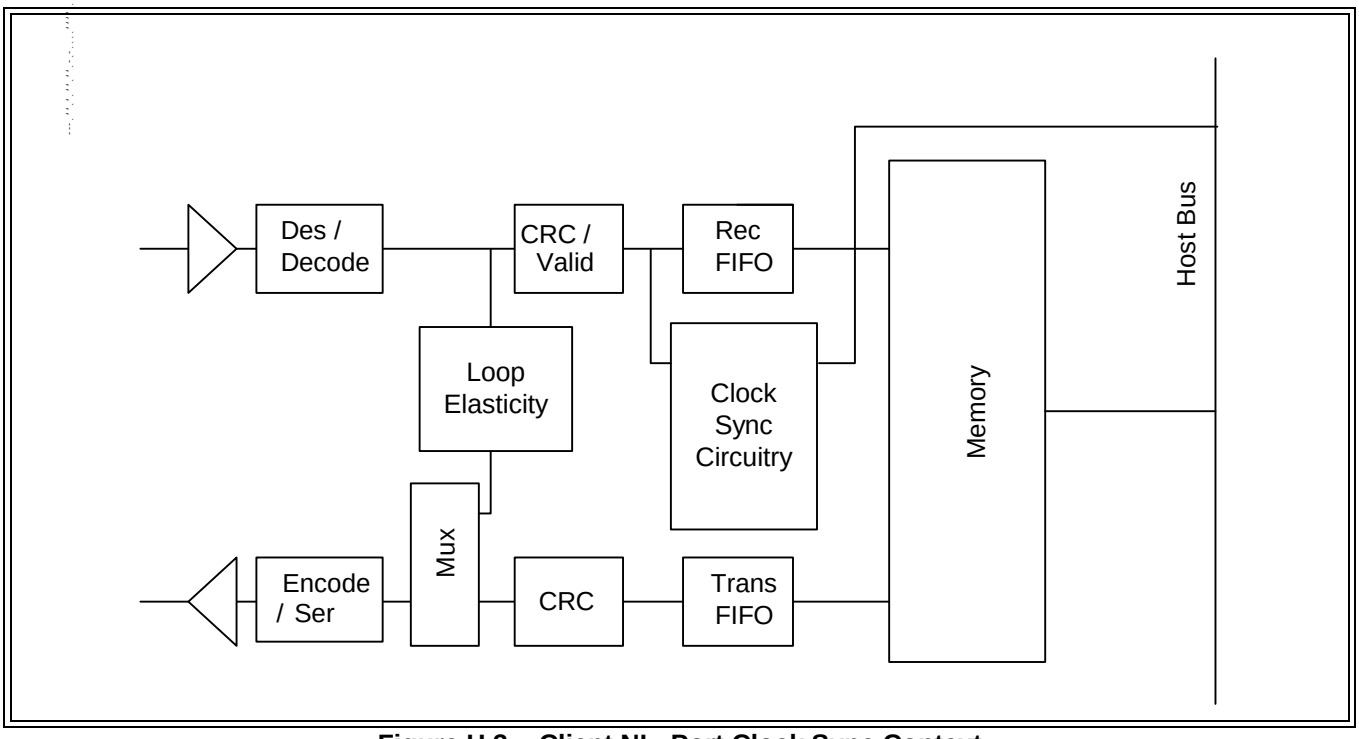


**Figure H.3 - Client NL_Port Clock Sync Context**

Copyright International Organization for Standardization
Provided by IHS under license with ISO
No reproduction or networking permitted without license from IHS Not for Resale

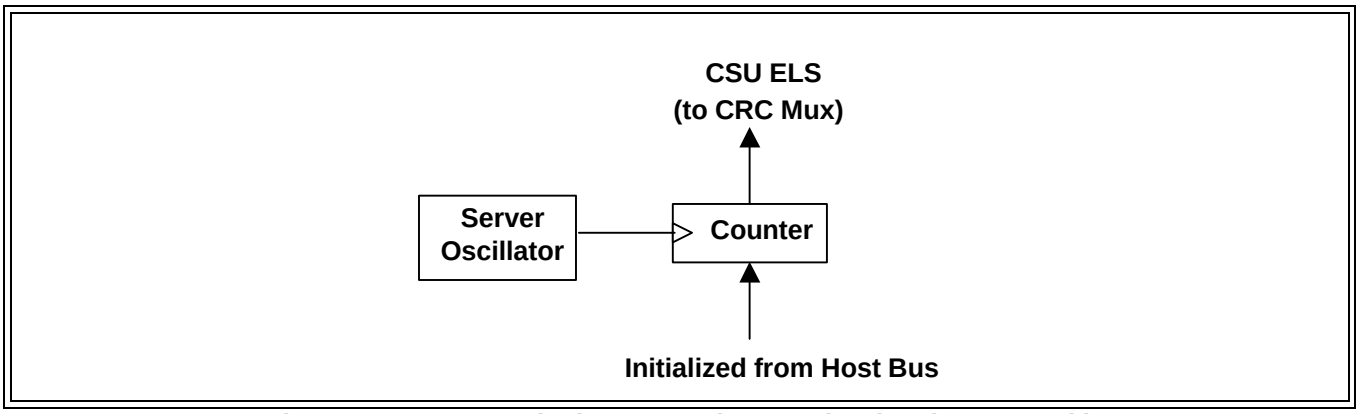


**Figure H.4 - Server Clock Sync Implementation (Basic Approach)**

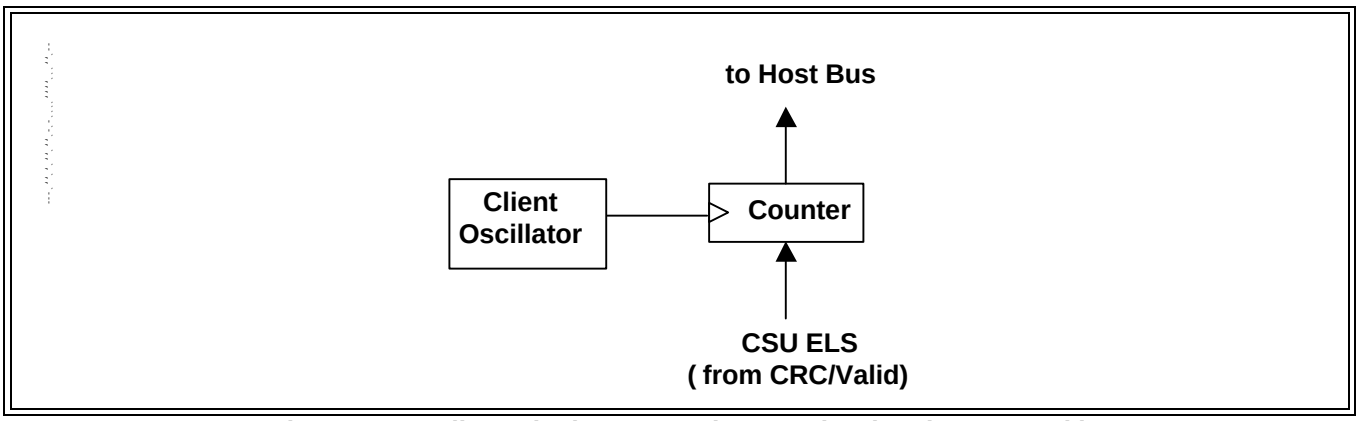


**Figure H.5 - Client Clock Sync Implementation (Basic Approach)**

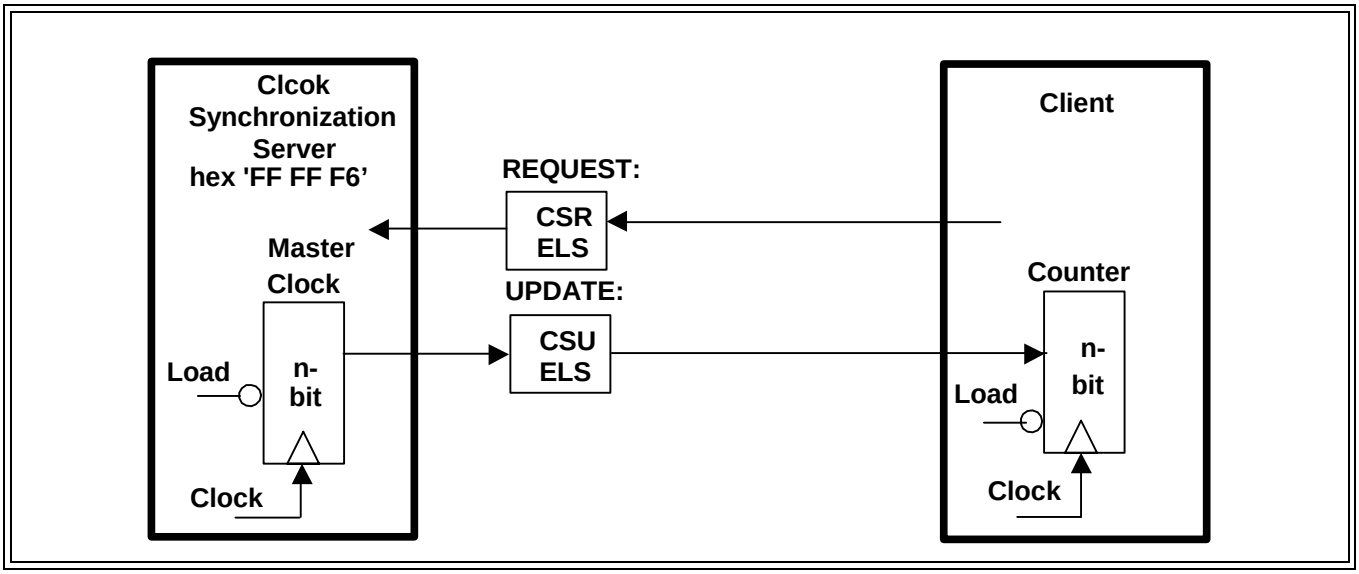


**Figure H.6 - ELS Clock Sync Model - Point-to-Point**

Copyright International Organization for Standardization
Provided by IHS under license with ISO
No reproduction or networking permitted without license from IHS Not for Resale

### H.2.4.2 Discussion of Errors

#### H.2.4.2.1 Introduction

Clock synchronization errors usually consist of both a deterministic and non-deterministic components. If extremely accurate clock information is needed, a system designer may measure or calculate the deterministic components of the errors and adjust the observed clock value to account for them. But the non-deterministic component is, by its nature, not subject to adjustment in the same way by the system designer.

#### H.2.4.2.2 Client Oscillator Frequency Error

Even though the counters in the server and the client nominally count at the same frequency, the oscillators that drive them are independently subject to the tolerances specified in the Fibre Channel standard. So even if they were to contain the exact same value at some point in time (e.g., just after receipt of the CSU ELS at the client), the values would slowly drift apart as time passes, until the next CSU ELS arrives. Figure H.7 illustrates this effect. The client oscillator is assumed to be of slightly higher frequency than that of the server. Near the center of the figure, it is assumed that another CSU ELS is received at the client. This results in the value of the client clock being corrected so that it again matches the server clock.

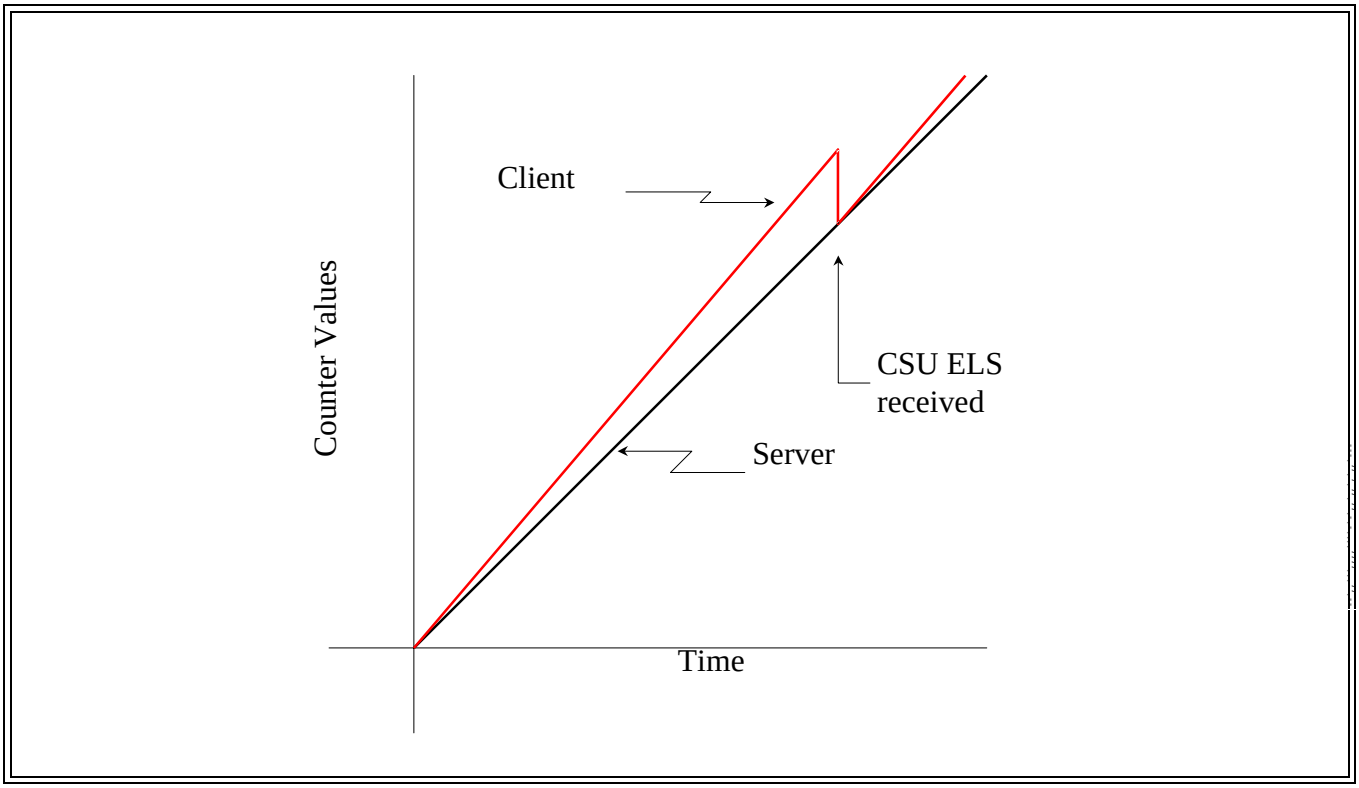


**Figure H.7 - Client Clock Drift**

The correction of the client's clock when it receives the CSU ELS limits the maximum error as seen by the user of the client's clock. However, it may also result in that user seeing time appear to run backwards. Reading the clock just prior to receipt of the CSU ELS may return a value that is larger than the value returned if the clock is read just after receipt of the CSU ELS. This non-monotonic behavior may cause difficulties with some algorithms that are intended to interpret these values.

The error due to oscillator frequency differences is essentially deterministic. A given client may determine the degree to which its oscillator frequency exceeds (or falls behind) that of the server by observing the time between receipt of CSU ELS frames, and the degree to which it's clock value exceeds (or lags) the value in the received CSU ELS. This error may then be largely compensated for, either by hardware or by software algorithms.

Copyright International Organization for Standardization
Provided by IHS under license with ISO
No reproduction or networking permitted without license from IHS Not for Resale

**Analysis:**

The parameters used in this analysis are given in table H.1

**Table H.1 - Parameters used in analysis**

| Symbol | Definition |
|---|---|
| T_CSU | The period of the CSU ELS frame (i.e., the time between successive CSU frames). |
| f_server | The frequency of the oscillator in the Clock Synchronization server. |
| f_client | The frequency of the oscillator in the Clock Synchronization client. |
| f_tol | The allowed tolerance of the Fibre Channel transmission frequency in either direction from the nominal frequency. |
| f_nom | The nominal frequency of Fibre Channel transmission. |
| freq_error | The maximum client clock error due to mismatch of client versus server oscillator frequencies. |

The maximum error occurs just prior to the receipt of a CSU ELS frame. Specifically,

freq_error = T_CSU * [f_client / f_server] - T_CSU

The worst mis-match occurs when one oscillator is at the fast end of the allowable range, and the other is at the slow end. So assume that:

f_client = f_nom * (1 + f_tol), and

f_server = f_nom * (1 - f_tol)

Then, since f_tol = 100 ppm

freq_error ~ T_CSU * ($2 * 10^{-4}$)

An example is given in table H.2.

**Table H.2 - Example of analysis results**

| T_CSU | freq_error |
|---|---|
| 100 m | 20 μs |
| 1 s | 200 μs |

#### H.2.4.2.3 Link Propagation Delay Error

In the preceding discussion, it was assumed that the CSU ELS that was sent from the server was received instantaneously at the client. In general this is not exactly true, since the frame needs to traverse the link that connects the two nodes. Since the value in the CSU ELS is not updated as it travels down the link, the value received by the client represents the value of the server's clock at some time in the past. For a given system, with fixed cable lengths, this error, too, is deterministic. For many systems of interest, the error is negligible. If it is not, its magnitude may be determined by the system designer and be compensated for. This assumes, of course, that the cable lengths are known and fixed.

--`,,```,,,,````-`-`,,`,,`,`,,`---
Copyright International Organization for Standardization
Provided by IHS under license with ISO
No reproduction or networking permitted without license from IHS
Not for Resale

**Analysis:**

The parameters used in this analysis are given in table H.3

**Table H.3 - Parameters used in analysis**

| Symbol | Definition |
|---|---|
| link_delay_error | The error caused by the fact that the Clock Count value in the CSU ELS frame does not update as the frame travels down the cable from the transmitter to the receiver. |

The magnitude of this error depends on the properties of the specific cable involved. Nominal estimates of delay are:

Electrical cables: 4,5 ns / meter

Optical cables: 5 ns / meter

Example:

For a 33-meter electrical cable:

link_delay_error ~ 33 m * 4,5 ns / m, or

link_delay_error ~ 149 ns

For a 10-Km optical cable,

link_delay_error ~ 10 Km * 5 ns / m, or

link_delay_error ~ 50 μs

#### H.2.4.2.4 Unload Error

Another assumption that was made in the preceding discussions was that the value in the CSU ELS exactly represented the content of the server's counter at the time the most significant bit of that value was placed on the wire (see 27.2.3.4). If a given implementation of a server fails to achieve this, the result may be observed by the client as an error. Depending on the design, this error may contain both deterministic and non-deterministic errors. Non-deterministic errors may result, if the design is such that the CSU ELS frame is placed into a FIFO behind other frames. Since it is not known ahead of time what, if any, other frames are ahead of the CSU ELS in the FIFO, the errors may appear to be non-deterministic. Deterministic errors could result from a failure of the design to account for transmission delays from the time the value is taken from the counter until it actually appears on the wire.

It is possible to deal with the deterministic portion of unload error by simply defining it to not exist in a particular system. Note that the server's deterministic unload error affects all client clocks by the same amount. If all references to time in the system are made through client clocks (i.e., if no reference is made directly to the clock in the server), then one could simply define the objective standard to be the server's counter value plus the server's unload error as defined above. By this definition, there is no remaining deterministic unload error at the system level. One should still be conscious of the non-deterministic portion of the error that could be much larger than the deterministic portion.

--`,,```,,,,````-`-`,,`,,`,`,,`---

Copyright International Organization for Standardization
Provided by IHS under license with ISO
No reproduction or networking permitted without license from IHS Not for Resale

**Analysis:**

The parameters used in this analysis are given in table H.4

**Table H.4 - Parameters used in analysis**

| Symbol | Definition |
|---|---|
| t_full_frame | Time to transmit a maximum-size Fibre Channel frame at full-speed Fibre Channel rate, including SOF, EOF, CRC, inter-frame gap, and Payload. |
| unload_error_D | The deterministic portion of the error caused by delays in the Clock Synchronization server logic between the time the counter value is read and the time the most significant bit of the clock count value in the CSU ELS frame is placed on the link. |
| unload_error_ND | The non-deterministic portion of the error caused by delays in the Clock Synchronization server logic between the time the counter value is read and the time the most significant bit of the clock count value in the CSU ELS frame is placed on the link. |

There is very little useful analysis that may be done regarding the unload error outside the context of a specific design. However, that the non-deterministic component of the error has the potential to be very large if it is not addressed in the design of the server's logic. The CSU ELS frame might be queued up in the server's Transmit FIFO behind some number of maximum-length frames. If the other end of the link has no buffer space to receive frames (BB_Credit = 0), then additional delays may occur beyond that needed to transmit the frames ahead of the CSU ELS.

**Example:**

Without justification, assume that unload_error_D is equivalent to the transmission time of 5 full-speed Fibre Channel Transmission Words. Then

unload_error_D = 5 * 37,65 ns = 188 ns

Regarding the non-deterministic portion of the unload error, assume that the CSU frame does not bypass the Transmit FIFO. Also assume that the FIFO may hold up to four full-size Fibre Channel frames; and that the design of the server does not ensure the FIFO is empty when the CSU ELS frame is pushed onto the FIFO. Assume, however, that BB_Credit > 0 so that no additional wait occurs beyond the time to transmit the frames in the FIFO. Then since

t_full_frame = ((15 + (2 112 / 4)) Transmission Words) * (37,65 ns / Transmission Word), or

t_full_frame ~ 20 μs

Then

unload_error_ND = t_full_frame * 3, or

unload_error_ND ~ 60 μs

#### H.2.4.2.5 Load Error

The link propagation delay error was discussed previously. That error dealt with the fact that the CSU ELS clock value was not updated as the ELS made its way from the server's transmitter to the client's receiver. But the client's clock synchronization counter is separated from its receiver by some amount of logic, the details of which depend on the specific design of the client. The time from the arrival of the CSU ELS at the client's receiver until the client's counter is updated is perceived by the client as an error. Similarly to the unload error discussed above, the load error may contain both deterministic and non-deterministic components.

Copyright International Organization for Standardization
Provided by IHS under license with ISO
No reproduction or networking permitted without license from IHS Not for Resale

**Analysis:**

The parameters used in this analysis are given in table H.5

**Table H.5 - Parameters used in analysis**

| Symbol | Definition |
|---|---|
| t_full_frame | Time to DMA a full Fibre Channel frame into host memory. |
| load_error_D | The deterministic portion of the error caused by delays in the Clock Synchronization client logic between the time the most significant bit of the clock count value in the CSU ELS frame is received from the link and the time that value is actually loaded into the client's counter. |
| load_error_ND | The non-deterministic portion of the error caused by delays in the Clock Synchronization client logic between the time the most significant bit of the clock count value in the CSU ELS frame is received from the link and the time that value is actually loaded into the client's counter. |

There is little useful analysis that may be done regarding the unload error outside the context of a specific design. Figure H.3 indicated that the CSU ELS frame went directly from the CRC/Validation logic into the client's clock synchronization circuitry. If instead, the frame may languish in the Receive FIFO, the non-deterministic portion of load error could become fairly large.

**Example:**

Without justification, assume the deterministic portion of load error is on the order of the time to transmit 6 full-speed Fibre Channel Transmission Words. Then

load_error_D = 6 * 37,65 ns ~ 226 ns

Regarding the non-deterministic portion of the load error, assume that the CSU frame does not bypass the Receive FIFO. Also assume that the FIFO may hold up to four full-size Fibre Channel frames. Arbitrarily assume that the design of the client logic is such that it may empty the FIFO exactly as fast as the link fills it. Then by assumption,

t_full_frame ~ 20 μs

Then

load_error_ND = t_full_frame * 3, or

load_error_ND ~ 60 μs

#### H.2.4.2.6 R/T Clock Domain Error

As defined above, the R/T clock domain error is actually a component of the load error. It is dealt with separately because of its unique nature. It is a non-deterministic error that arises from the (assumed) fact that not all of the logic in the client's port operates from the same clock oscillator. It is assumed that most of the logic is operated from the same oscillator that drives the transmitter. But there is a small amount that is operated from the clock recovered from the received serial bit stream. Specifically, the deserialize/decode logic and the front end of the elasticity buffer of figure H.3 are assumed to operate from the recovered clock. Passing information from one clock domain to another requires re-synchronizing to the receiving domain's clock. Standard methods for accomplishing this generally result in a delay of 1 to 2 cycles of the receiving domain's clock. This difference (i.e., zero to one cycle of the receiving domain's clock) is non-deterministic. The R/T Clock Domain Error may be treated as a deterministic delay of one-and-a-half clock cycles, and a non-deterministic value of +/- one-half of a clock cycle.

--`,,```,,,,````-`-`,,`,,`,`,,`---

Copyright International Organization for Standardization
Provided by IHS under license with ISO
No reproduction or networking permitted without license from IHS Not for Resale

**Analysis:**

The parameters used in this analysis are given in table H.6

**Table H.6 - Parameters used in analysis**

| Symbol | Definition |
|---|---|
| logic_clk_period | The period of the clock that drives the logic in which the client's clock synchronization counter resides. |
| clk_domain_error_D | The deterministic portion of the client clock error due to crossing between the receiver clock domain and the clock domain in which the client's clock synchronization counter resides. |
| clk_domain_error_ND | The non-deterministic portion of the client clock error due to crossing between the receiver clock domain and the clock domain in which the client's clock synchronization counter resides. |

Using the assumptions stated in the preceding discussion,

clk_domain_error_D = 1,5 * logic_clk_period, and

clk_domain_error_ND = 0,5 * logic_clk_period

**Example:**

Assume that the logic_clk_period is the same as the time to transmit one Fibre Channel Transmission Word. i.e.,

Assume logic_clk_period = (40 bits / (1,0 625 * $10^9$ bits/sec)) = 37,56 ns. Then

clk_domain_error_D = 56 ns, and

clk_domain_error_ND = 19 ns

#### H.2.4.2.7 Server Oscillator Error

An assumption in the preceding discussions is that the server's oscillator frequency is correct by definition. Recall that the stated goal of the clock synchronization service is to faithfully reproduce at each client node, an exact copy of the server's counter that is counting cycles of the server's oscillator. If the goal is, instead, to provide each client with a value that represents some other, independent clock value, then the extent to which the server's oscillator fails to match the update rate of that other clock is seen as another error. A discussion of this error is outside the scope of this annex.

### H.2.4.3 Techniques for Reducing Deterministic Errors

#### H.2.4.3.1 A Fix for Differences in Oscillator Frequencies

Shown in figure H.8 is a model of logic that could be used in place of figure H.5 to correct for errors due to the difference in the frequency of the client's oscillator as compared to that of the server. This figure is intended as a model only, not as a specific implementation (e.g., multipliers and dividers may take up a considerable amount of logic, and may be replaced by an appropriate series of adds; or by some techniques such as skipping counts (if the client's oscillator is too fast), or inserting counts (if the client's oscillator is too slow)).

In the figure, it is assumed that the counter is simply set to zero upon receipt of the CSU ELS frame, rather than being loaded with the value in the CSU ELS. At that same time, the value from the CSU ELS frame is captured in the $ELS_value_n$ register, the previous value from the $ELS_value_n$ register is captured in the $ELS_value_{n-1}$ register,

--`,,```,,,,````-`-`,,`,,`,`,,`---

Copyright International Organization for Standardization
Provided by IHS under license with ISO
No reproduction or networking permitted without license from IHS Not for Resale

and the value in the counter just prior to its being reset is captured in the ELS_arrived$_{n-1}$ register. These values are then used as shown in the figure to calculate the client's local clock value.

Figure H.9 shows a minimal set of hardware assists needed to implement the model of figure H.8. Upon the receipt of the CSU ELS, host software would read the ELS_value $_n$ and ELS_arrived $_{n-1}$ registers. Since the ELS_value$_{n-1}$ register is nothing more than the old value of the ELS_value $_n$ register, host software would maintain this value internally. The calculation of the Adjustment $_n$ factor and the corrected valued used by client would be calculated by host software using the algorithms indicated in figure H.8.

The Raw Time Tag tuple from the ELS_value $_n$ register is shown in the figure as being available directly, and not going through the host bus interface. This is to emphasize the problem in allowing software delays to corrupt the attachment of the time tag value to data sets. The implication of the figure is that the Raw Time Tag value would be available directly to some hardware that could attach the value directly to the data set with minimal delay. A simple addition of the counter value to the ELS_value $_n$ value would result in an unadjusted, non-monotonic time value as shown in figure H.7. But for more accurate results, host software could apply the adjustment factor from figure H.8.

Moving the calculation of the adjustment factor to software has additional benefits. The model of figure H.8 implicitly assumes that the only error involved is that due to differences in the oscillator frequencies of the server and its clients. In a real implementation, of course, all of the sources of error contributes to the total error. The host software algorithms may apply filtering algorithms to the data in addition to simply calculating the adjustment factor. This results in better estimates of the true value of the clock.

#### H.2.4.3.2 A Fix for Link Propagation Delay Error

Simply adding it to the value received in the CSU ELS frame may compensate for the deterministic portion of the link propagation delay error (see figure H.10).

#### H.2.4.3.3 A Fix for Load Error

The fix for link propagation delay error may also be used to correct the deterministic portion of the load error by simply replacing the link propagation delay error in figure H.10 by the load error. Of course, both errors may be corrected simultaneously by simply adding them together before applying them to the adder.

Copyright International Organization for Standardization
Provided by IHS under license with ISO
No reproduction or networking permitted without license from IHS Not for Resale

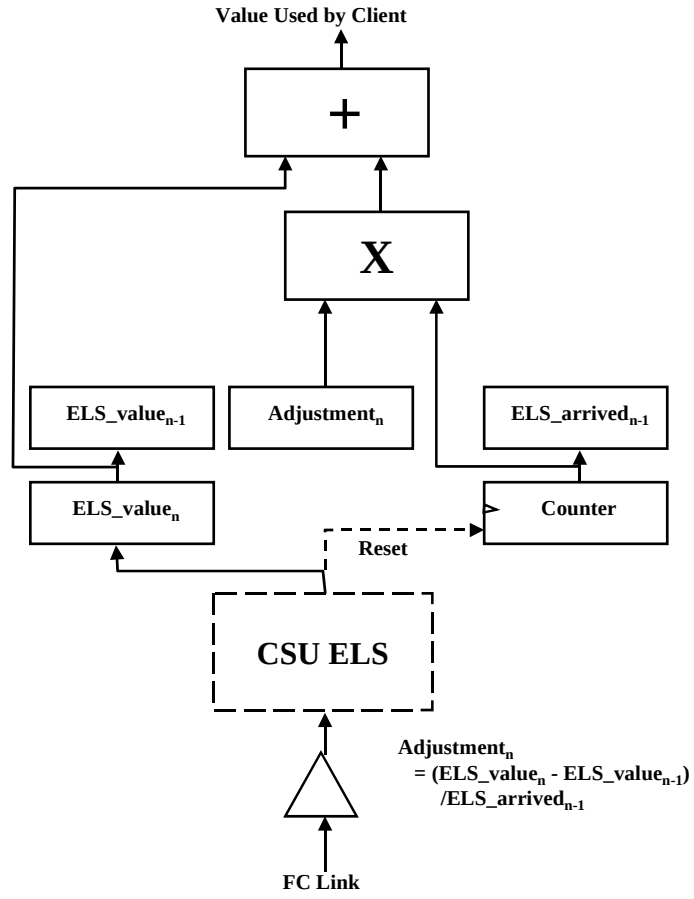


**Figure H.8 - Client Clock Sync Logic Model (Rate Adjusted)**

--`,,```,,,,````-`-`,,`,,`,`,,`---

Copyright International Organization for Standardization
Provided by IHS under license with ISO
No reproduction or networking permitted without license from IHS Not for Resale

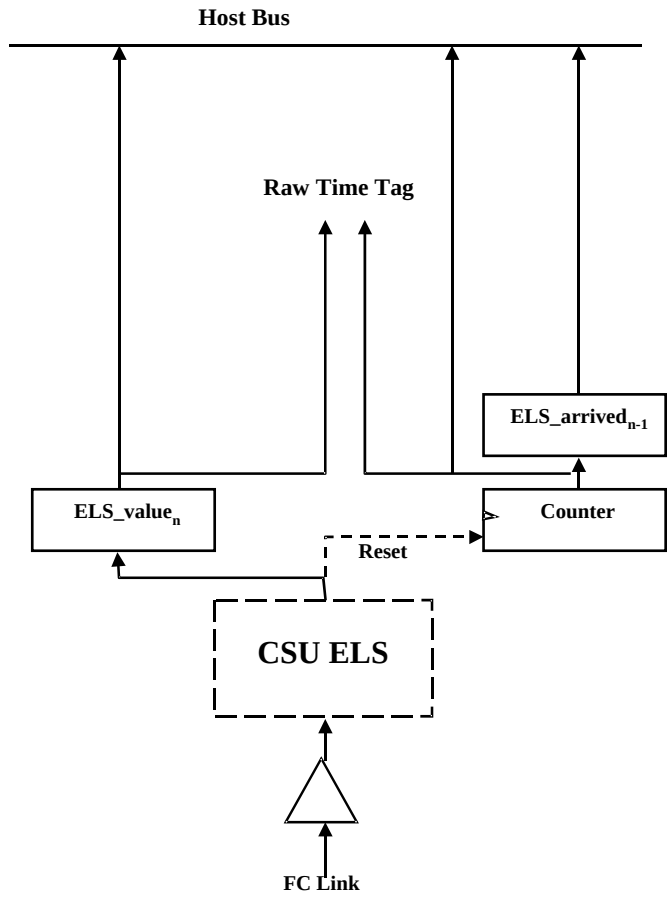


**Figure H.9 - Rate Adjustment Hardware Assists for Client Clock Sync**

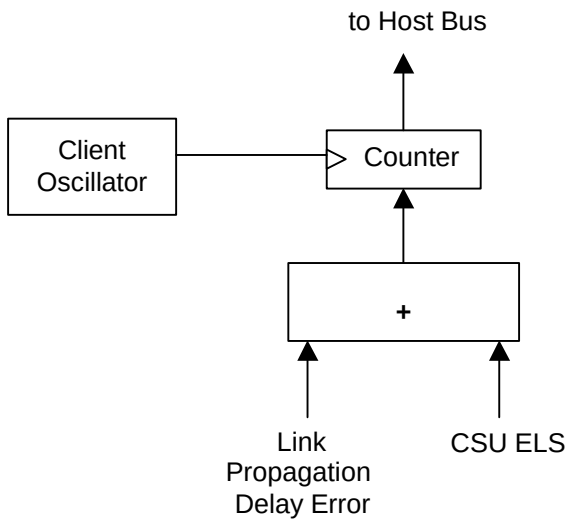


**Figure H.10 - Client Clock Sync Implementation (Link Delay Fix)**

Copyright International Organization for Standardization
Provided by IHS under license with ISO
No reproduction or networking permitted without license from IHS
Not for Resale

#### H.2.4.3.4 A Fix for Unload Error

H.2.5.2.3 indicated that it was possible under some conditions to define the deterministic portion of the unload error into non-existence. If this is not possible or desirable for some system, another approach for correcting it is shown in figure H.11. If this fix is combined with that of H.2.4.3.2 (i.e., the fix for link propagation delay error), the two adders are in series. While it would be possible to combine the two adders by combining the Load Error of the client with the Unload Error of the server, this is not recommended. Doing so would violate the concept of information hiding and would also violate at least the spirit of the standard, since the standard requires that the value in the CSU ELS correctly represent the time in the server's clock as the CSU ELS exits the server port.

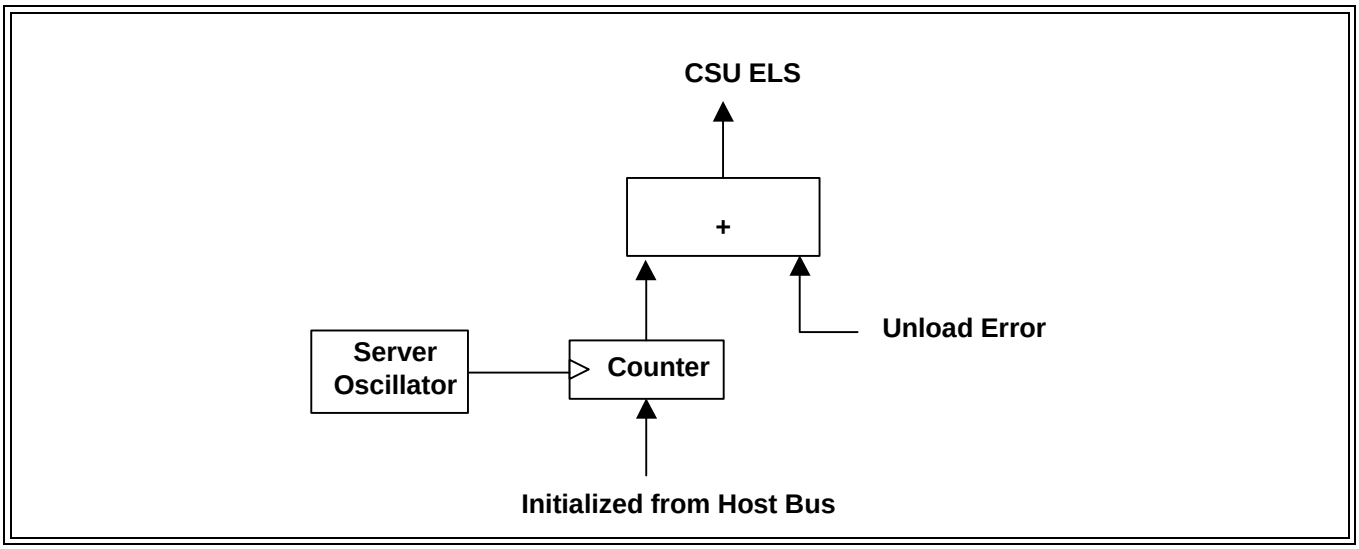


**Figure H.11 - Server Clock Sync Implementation (Unload Error Fix)**

#### H.2.4.4 Dealing With Non-Deterministic Error

On the server side, the fix for the non-deterministic component of unload error is to eliminate as many sources of non-deterministic delay as possible. Some design elements to consider include the following:

a) Transmit FIFO control. Assuming that the CSU ELS frame is entered into the Transmit FIFO of figure H.2, ensure that the FIFO is empty at the time the Clock Count value is pushed onto the FIFO.
b) BB_Credit. Before the CSU ELS frame is entered into the Transmit FIFO, ensure that BB_Credit is greater than zero. This ensures that the frame may be transmitted onto the link without delay.

On the client side, a design element to consider is special CSU frame handling. The CSU ELS frame has a unique R_CTL Information Category value. This may be of use in quickly recognizing the incoming CSU frame so that it be given special handling (e.g., bypassing the normal Receive FIFO).

On either the server or the client side, a design element to consider is priority. One could use high priority for minimizing delays in processing the CSU ELS frame.

#### H.2.4.5 Dealing With Non-Monotonicity

As discussed in H.2.4.2, if the client oscillator frequency error is not corrected, the client's counter may be set to an earlier time value when the CSU ELS is received. If the proposed fix for this error source is not implemented, it may still be desirable to have a monotonically increasing client clock value in order to avoid difficulties with some algorithms that use that value. If the client's oscillator is slower than that of the server, non-monotonicity does not occur -- the value of the client's counter jumps when the CSU ELS is received, but the jump is in the positive direction. So the problem only occurs when the client's oscillator is faster than that of the server. In this case, when the CSU ELS is received, rather than simply loading the CSU ELS value into the counter as was done in figure H.5 and continuing to count from there, one could stop the counter for a number of clock cycles. The number of cycles to stop could be calculated as the difference between the client counter value at the time the CSU ELS is received,

Copyright International Organization for Standardization
Provided by IHS under license with ISO
No reproduction or networking permitted without license from IHS Not for Resale

and the value in the CSU ELS. The result of this would be as shown figure H.12.

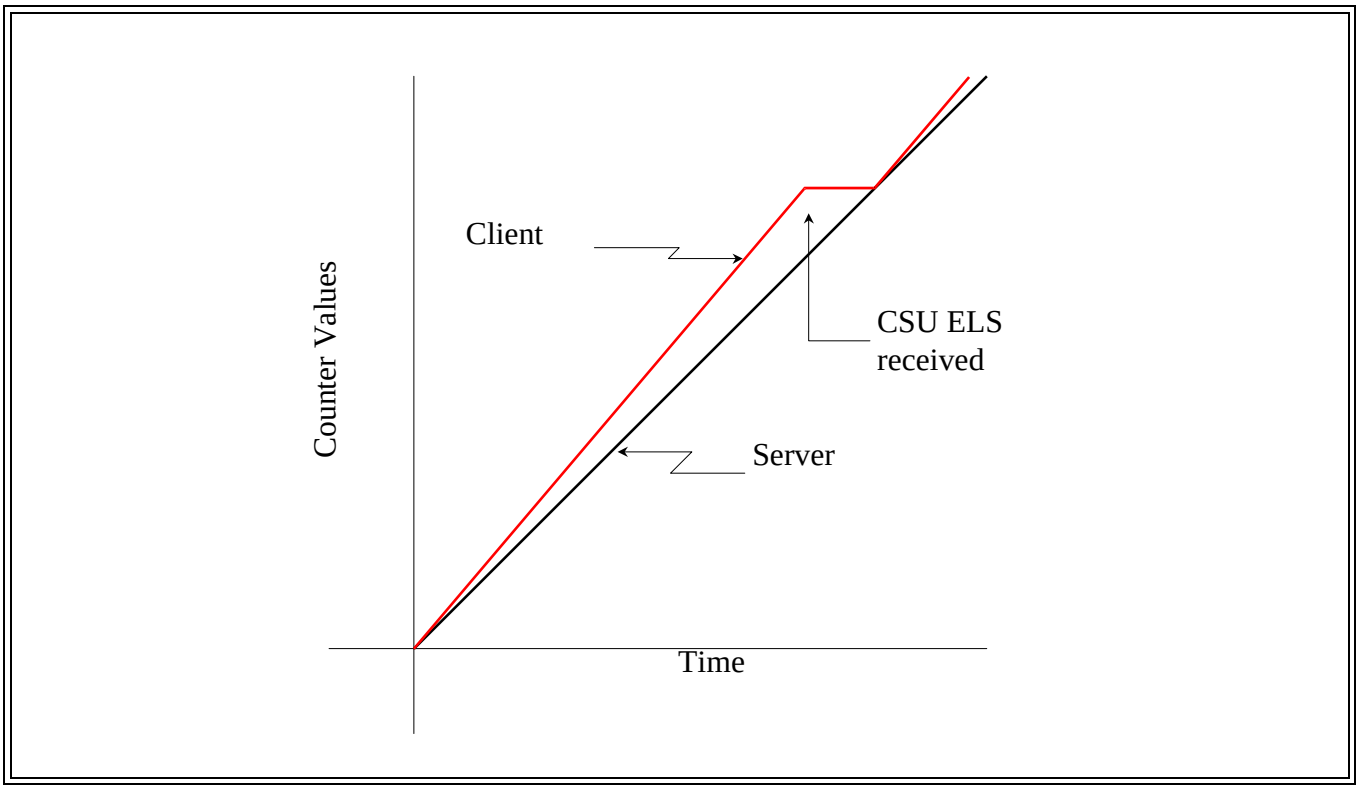


**Figure H.12 - Client Clock Drift (Monotonic)**

### H.2.5 Fabric Considerations

#### H.2.5.1 Introduction

For reference, figure H.13 reproduces the model from 27.2 for the Clock Synchronization Service in a Fabric-based system. Note that for purposes of this discussion, we have exercised the option for the Fabric to have its own counter and update the value in the Payload of the outgoing CSU frame. This is the basis for the discussions in the sub-clauses that follow. In order to illustrate more of the possible sources of error, the discussions assume that the Clock Sync Server is implemented in a separate node outside of any switch element in the Fabric. It should be noted, however, that implementing this server inside of the Fabric might allow for eliminating some of these errors altogether. For simplicity, a single-switch Fabric is assumed in all of the examples.

The insertion of the Fabric between the server and the client results in additional errors being introduced into the client's counter. In terms of error analysis, the Fabric acts as a client of the server, and as a server to the ultimate client.

Copyright International Organization for Standardization
Provided by IHS under license with ISO
No reproduction or networking permitted without license from IHS
Not for Resale

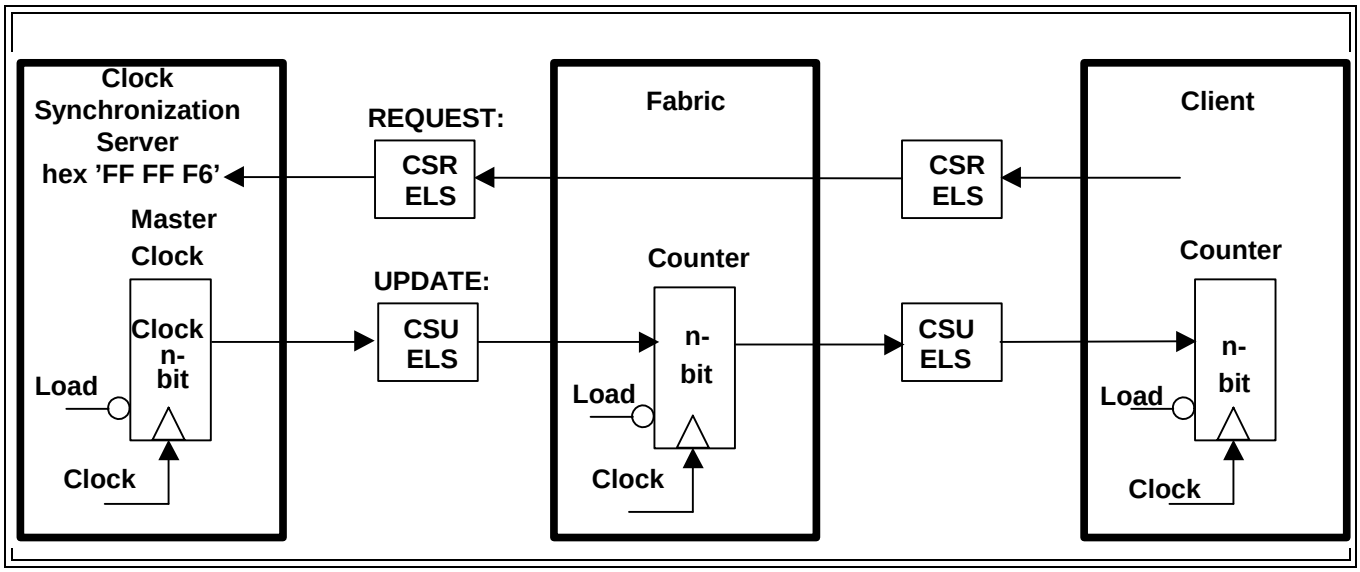


**Figure H.13 - ELS Clock Sync Model – Fabric**

### H.2.5.2 Discussion of Errors

The general nature of these errors is the same as discussed in H.2.4.2. Here, we discuss only the differences between the point-to-point case and the fabric case.

#### H.2.5.2.1 Client Oscillator Frequency Error

In the Fabric case, there are at least two oscillators that may introduce errors -- the one in the ultimate client, and the one in the Fabric, in its role as a client. For the best results, both errors should be considered. The design of the specific Fabric in question should be analyzed to determine the exact number of oscillators in the Fabric that need to be considered.

Fabric oscillator(s) only affect the end result for the period of time between the arrival of the CSU ELS at the Fabric (from the original server), and the time the Fabric sends the CSU ELS to the ultimate client. In a well-designed system, this time is very small, and the resulting error may be ignored.

**Analysis:**

The parameters used in this analysis are given in table H.7

Copyright International Organization for Standardization
Provided by IHS under license with ISO
No reproduction or networking permitted without license from IHS Not for Resale

**Table H.7 - Parameters used in analysis**

| Symbol | Definition |
|---|---|
| T_CSU_Fabric | The time between receipt of a CSU ELS frame by the Fabric and the time it transmits the CSU ELS frame to the ultimate client. |
| f_server | The frequency of the oscillator in the Clock Synchronization server. |
| f_fabric | The frequency of the oscillator in the Fabric. |
| f_tol | The allowed tolerance of the Fibre Channel transmission frequency in either direction from the nominal frequency. |
| f_nom | The nominal frequency of Fibre Channel transmission. |
| freq_error_fabric | The maximum client clock error due to mismatch of fabric versus server oscillator frequencies. |

The error accumulates during the time the CSU ELS frame is resident in the Fabric. This error is in addition to the similar error that occurs at the client for the time between CSU ELS frames. Specifically,

freq_error_fabric = T_CSU_Fabric * [f_fabric / f_server] - T_CSU_Fabric

The worst mis-match occurs when one oscillator is at the fast end of the allowable range, and the other is at the slow end. So assume that:

f_fabric = f_nom * (1 + f_tol), and

f_server = f_nom * (1 - f_tol)

Then, since f_tol = 100 ppm,

freq_error_fabric ~ T_CSU_Fabric * ($2 * 10^{-4}$)

Another way to look at this is that the worst case total error due to both Fabric and Client oscillator frequency differences (as compared to the Server) is:

freq_error_total = freq_error + freq_error_fabric, or

freq_error_total = (T_CSU + T_CSU_Fabric) * ($2 * 10^{-4}$)

An example is given in table H.8:

**Table H.8 - Example of analysis results**

| T_CSU_Fabric | freq_error_fabric |
|---|---|
| 80 μs | 16 ns |
| 320 μs | 64 ns |

Note that even with these rather large values of T_CSU_Fabric this component is quite small compared to T_CSU that was calculated in H.2.4.2.2 and may therefore be ignored.

Copyright International Organization for Standardization
Provided by IHS under license with ISO
No reproduction or networking permitted without license from IHS Not for Resale

#### H.2.5.2.2 Link Propagation Delay Error

In the case of the Fabric, there are two links that contribute to the error (i.e., one from the original server to the Fabric, and one from the Fabric to the ultimate client). These errors should be commensurate with each other.

#### H.2.5.2.3 Unload Error

There are two sources of unload error (i.e., one in the original server, and one in the Fabric as it acts as a server for the ultimate client). These errors should be commensurate with each other.

Caution should be used when ignoring the deterministic portion of unload error. The unload error associated with the server itself may still be ignored. The unload error associated with the Fabric may only be ignored if it is known that the path from the server to each client goes through the same number of Fabric elements; and that the Fabric elements all have identical unload errors. If this is true, though, the unload error of the Fabric may be treated the same as that of the server.

The considerations of H.2.4.3.4 may be applied to lessen the non-deterministic portion of unload error in the Fabric.

**Analysis:**

The presence of the Fabric has two potential effects. First, and most obviously, the circuitry in the Fabric that maintains the counter and that acts as the surrogate server for the client, has its own unload error. This error simply adds to the unload error of the original Server. Secondly, contention in the Fabric may affect the unload error of the original Server if care is not taken in the design of the Server. Specifically, if the Server design takes the value from the counter and puts it in the CSU ELS frame before ensuring that the BB_Credit is greater than zero, then contention in the Fabric causes a delay in getting the CSU ELS onto the wire. This increases the Server's unload error.

**Example:**

Regarding the non-deterministic portion of the unload error, assume in the Fabric case that the Transmit FIFO may hold up to four full-size Fibre Channel frames; and that the design of the server does not ensure the FIFO is empty when the CSU ELS frame is pushed onto the FIFO. Again without justification, assume that each of the frames (including the CSU ELS frame) waits for delivery of, for example , four full-size Fibre Channel frames before it receives BB_Credit so that it may proceed. Then since

t_full_frame = ((15 + (2 112 / 4)) Transmission Words) * (37,65 ns / Transmission Word), or

t_full_frame ~ 20 μs

Then

unload_error_ND = t_full_frame * (3 * (4+1) + (4)), or

unload_error_ND ~ 380 μs

#### H.2.5.2.4 Load Error

There are two sources of load error (i.e., one in the ultimate client, and one in the Fabric as it acts as a client of the original server). These errors should be commensurate with each other.

#### H.2.5.2.5 R/T Clock Domain Error

The Fabric may contain internal clock boundaries that are crossed as the CSU ELS information passes through the Fabric. The number of such crossings depends on the internal design of the Fabric.

Copyright International Organization for Standardization
Provided by IHS under license with ISO
No reproduction or networking permitted without license from IHS Not for Resale

#### H.2.5.2.6 Server Oscillator Error

The effect of the Fabric oscillator frequency is included as part of the client oscillator frequency error (see H.2.5.2.1).

### H.2.5.3 Fixes for Fabric Errors

Since the nature of the errors introduced by the Fabric is the same as those discussed in the point-to-point case, the same fixes may be applied to the design of the Fabric.

It should be emphasized that 27.2.3.4 includes rules for Fabrics that are designed to minimize the effect of delays through the Fabric. The Fabric maintains its own counter. It loads this counter with the value received in the incoming CSU ELS frame. When the CSU frame is to be forwarded on the Client link, the Fabric modifies the CSU frame to contain the current value from the counter in the Fabric. If these rules are followed, the effect of delay through the Fabric is essentially eliminated.

## H.2.6 Loop Considerations

### H.2.6.1 Introduction

For reference, figure H.14 reproduces the model from 27.2 for the Clock Synchronization Service in a Loop-based system. This is the basis for the discussions in the sub-clauses that follow.

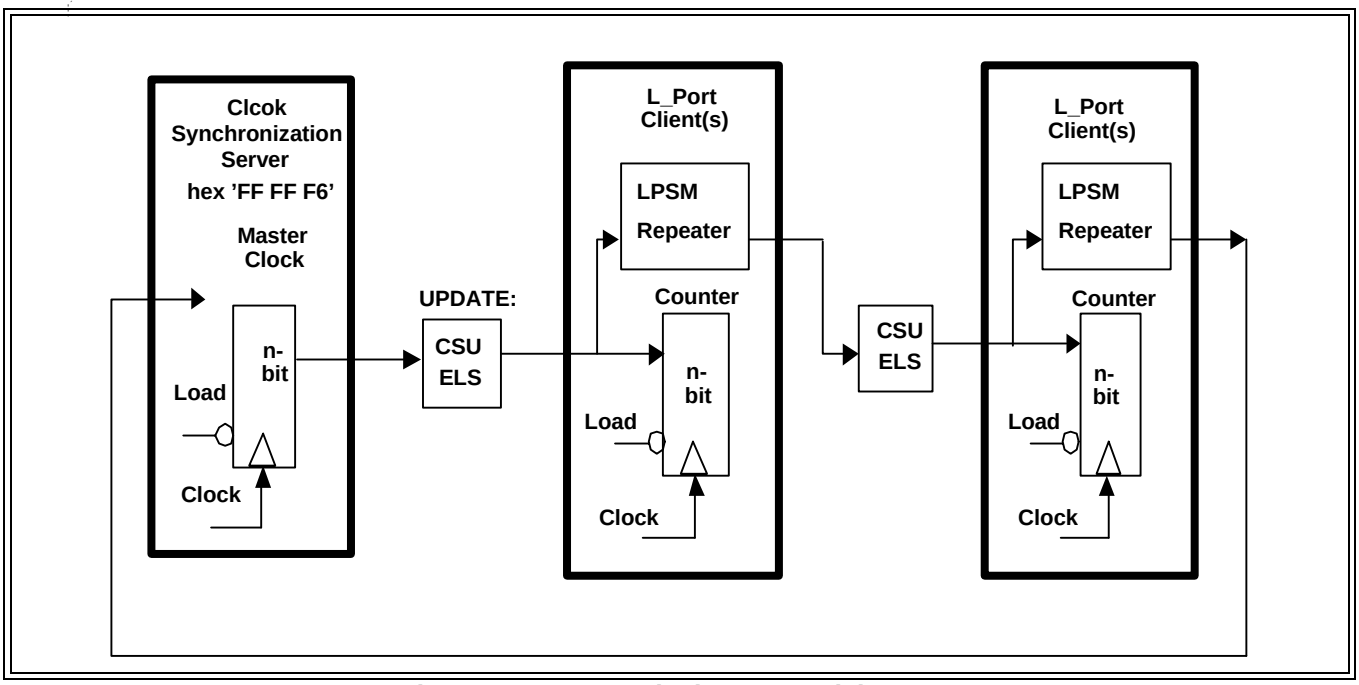


**Figure H.14 - ELS Clock Sync Model – Loop**

The diagram assumes that one of the L_Ports acts as the server while the other nodes on the Loop are clients. However, there is no requirement that all nodes on the loop be clients. The insertion of n L_Ports between the server and the client(s) results in additional errors being introduced into the client's counter. In terms of error analysis, it doesn't matter if the nodes between the server and a given client are clients or not since the delay through the LPSM repeater is the same.

### H.2.6.2 Discussion of Errors

### H.2.6.3 Introduction

The general nature of these errors is the same as discussed in H.2.4.2, but only the differences between the

Copyright International Organization for Standardization
Provided by IHS under license with ISO
No reproduction or networking permitted without license from IHS Not for Resale

point-to-point case and the loop case are discussed. One unique aspect of the loop configuration is the delay that occurs as Transmission Words are passed from one node to the next (node delay) (see H.2.6.3.1).

#### H.2.6.3.1 Node Delay

The Arbitrated Loop standard (FC-AL-2) allows up to 6 Transmission Word times to elapse between the time a Transmission Word is received until it is forwarded on to the next node in the loop. This delay is largely deterministic. There is a non-deterministic component of the error due to clock skew management.

**Analysis:**

The parameters used in this analysis are given in table H.9

**Table H.9 - Parameters used in analysis**

| Symbol | Definition |
|---|---|
| node_delay_error_D | The deterministic portion of the error caused by the fact that the Clock Count value in the CSU ELS frame is not updated as the frame is passed from one node to the next. |
| node_delay_error_ND | The non-deterministic portion of the error caused by the fact that the Clock Count value in the CSU ELS frame is not updated as the frame is passed from one node to the next. |

**Example:**

In order to calculate the cumulative deterministic node delay, the system designer needs to know the number and type of nodes that lie between the server and the client. This is different for each client on the loop.

Assume there are 5 nodes from Vendor A and 5 nodes from Vendor B between the server and the client. Also assume the specific node delays are as follows:

Vendor_A_node_delay = 6 Transmission Word times

Vendor_B_node_delay = 5 Transmission Word times

Then the deterministic node delay is as follows:

node_delay_error_D = 5 * Vendor_A_node_delay + 5 * Vendor_B_node_delay

node_delay_error_D = 5 * (6 * 37,65 ns) + 5 * (5 * 37,65 ns)

node_delay_error_D = 2,07 µs

For estimating the non-deterministic error, consider the discussion in [2], FC-AL-2 concerning L_Port Elasticity buffer management, which requires that no more than 4 Transmission Words are deleted between frames. Using this assumption, the worst case non-deterministic error would be:

node_delay_error_ND = 4 * 37,56 ns

node_delay_error_ND = 150,24 ns

This shows that even under worst case conditions the non-deterministic node delay error is small compared to the deterministic error, depending on the size of the loop. The larger the loop the smaller the error is.

--`,,```,,,,````-`-`,,`,,`,`,,`---

Copyright International Organization for Standardization
Provided by IHS under license with ISO
No reproduction or networking permitted without license from IHS Not for Resale

#### H.2.6.3.2 Client Oscillator Frequency Error

This error is the same as discussed in H.2.4.2.2. Only the server's oscillator and the oscillator of the client under consideration need to be considered. The effect of oscillators in other nodes is considered as part of the non-deterministic component of node delay error.

#### H.2.6.3.3 Link Propagation Delay Error

The nature of this error is the same as discussed in H.2.4.2.3. In the case of the loop, of course, the number of links to consider is generally larger. The links to consider are all of the links that lie between the server's transmitter and the client's receiver, which is different for each client on the loop.

#### H.2.6.3.4 Unload Error

This error is the same as discussed in H.2.4.2.4. Even in the loop configuration, there is only one unload error that is due to the server. There is no unload error in intermediate nodes because the counter value is simply transferred from input to output without being loaded into a counter and then unloaded from the counter.

#### H.2.6.3.5 Load Error

This error is the same as discussed in H.2.4.2.5. Even in the loop configuration, there is only one load error that applies to any given client. That is the load error in that client. There is no load error in intermediate nodes because the counter value is simply transferred from input to output without being loaded into a counter and then unloaded from the counter.

#### H.2.6.3.6 R/T Clock Domain Error

This error is the same as discussed in H.2.4.2.6. Even in the loop configuration, there is only one R/T clock domain error that applies to any given client. That is the R/T clock domain error in that client. The effect of clock domain crossings in other nodes is considered as part of the non-deterministic component of node delay error.

#### H.2.6.3.7 Server Oscillator Error

The Loop does not introduce any additional errors in this area.

### H.2.6.4 Fixes for Loop Errors

Since the nature of the errors introduced in a loop is generally the same as those discussed in the point-to-point or Fabric cases, the same fixes may be applied to the design of the loop.

There is one source of error that is unique to loops, that being the node delay. The deterministic portion of the node delay error may be subtracted out at the client, as was done for other deterministic errors. Another approach to minimizing node delay error is to position the most time-sensitive nodes as close as possible to the server (on the downstream side).

## H.3 An Example

Figure H.15 shows a hypothetical example of the application of clock synchronization to a tactical avionics system. The system contains two independent sensor subsystems, a processing subsystem, and a weapon delivery subsystem. The sensor subsystems receive energy from their environment, convert it to a series of digital samples, and send the sample set to the processing subsystem. Based on the combined information from the two sensor subsystems, the processing subsystem determines whether potential targets are present and if so, their tracking information. This data is presented to the pilot. The processing subsystem then computes data for attacking a target identified by the pilot. This data is sent to the weapon delivery subsystem that causes the weapon to be targeted and released at the appropriate time for accurate delivery.

Copyright International Organization for Standardization
Provided by IHS under license with ISO
No reproduction or networking permitted without license from IHS Not for Resale

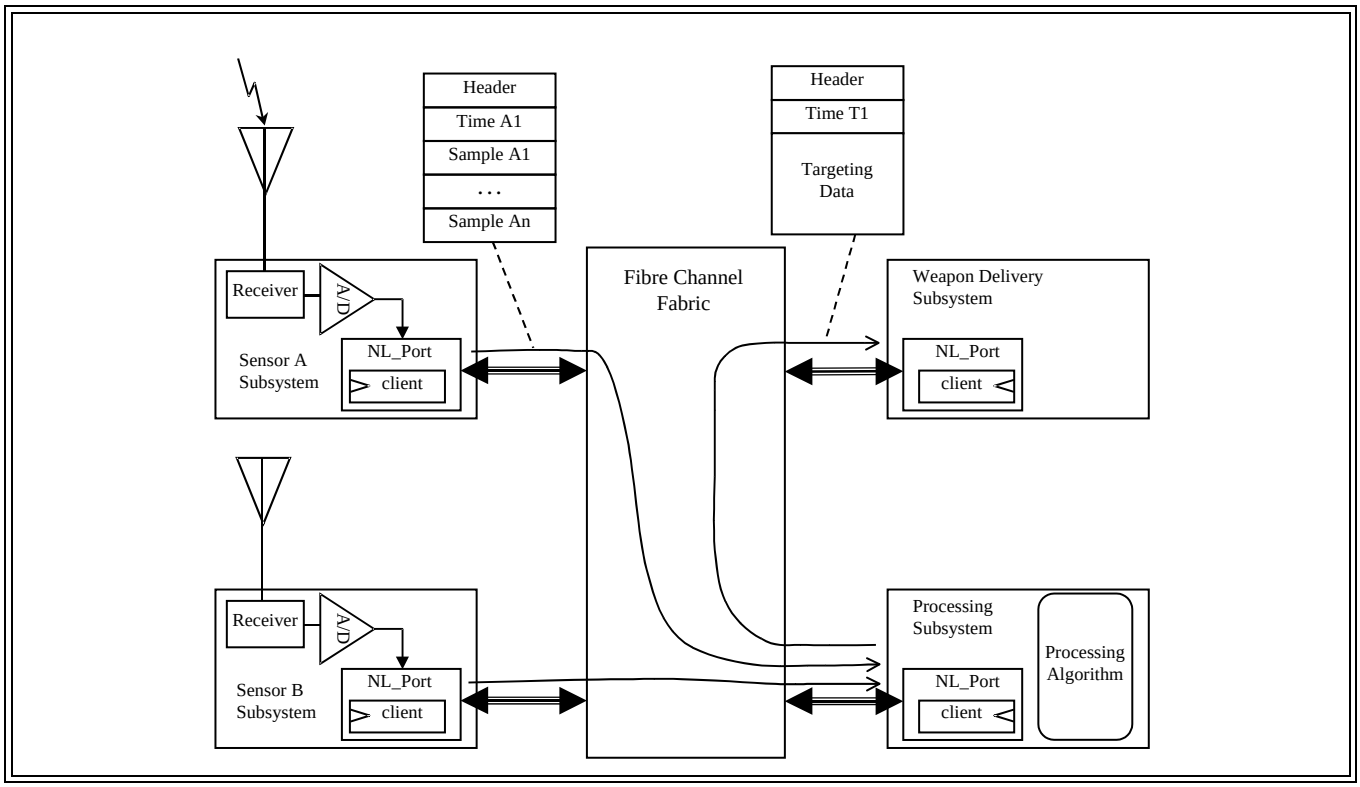


**Figure H.15 - Application of Clock Synchronization to Tactical Avionics**

The figure does not explicitly show the Clock Synchronization server. Each of the four subsystems, though, is presumed to be a client of the same server so that they share a common sense of time.

The sensor subsystems attach a time tag (Time A1, Time B1) to the set of digitized samples from their respective receivers. Assuming that successive samples in a data set are taken at regular intervals, tagging the data set with the time of arrival of the energy at the sensor for the first sample allows the determination of the time of arrival of all samples in the set.

The information available to the algorithm in the processing subsystem includes:

a) Digitized samples of the energy received at Sensor A
b) The time of arrival of the sampled energy at Sensor A
c) Characteristics of Sensor A, including the orientation of the receiving aperture
d) Digitized samples of the energy received at Sensor B
e) The time of arrival of the sampled energy at Sensor B
f) Characteristics of Sensor B, including the orientation of the receiving aperture
g) The current time

Note that once the time tag has been attached to the samples by the sensor subsystems, the processing subsystem has no need to further tag them (e.g., it is not necessary for it to note the time at which the frames containing the samples arrived at its FL_Port). What is important is the time at which the energy from potential targets arrived at the sensors. The current time may be important so that the processing subsystem does not present stale data to the pilot. It is also important so that any computed targeting information be prepared for a time that is still in the future (It would do little good to tell the weapon delivery subsystem what it should have done at some time in the past). The sense of shared time between the processing subsystem and the weapon delivery subsystem ensures that the weapon is triggered at the time most appropriate for precise delivery of the weapon.

In this example, the critical associations of time and data occur in the sensor subsystems and in the weapon delivery subsystem. If software is involved in reading the time counter and attaching it to a data set, the accuracy of

Copyright International Organization for Standardization
Provided by IHS under license with ISO
No reproduction or networking permitted without license from IHS Not for Resale

the time tag may be worse by at least one, and probably two orders of magnitude as compared to a hardware-based time tagging. So for maximum precision, the sensor subsystems would use hardware to capture a time value from the counter at the precise time that the sample comes from the analog-to-digital converter (Even greater inaccuracy would result if the samples were to travel through the Fabric and be time-tagged when they arrive at the processing subsystem).

Similarly, in the weapon delivery subsystem, the actual triggering of the weapon would be accomplished by hardware directly linked to the synchronized time counter.

In contrast to these considerations, the software in the processing subsystem has a more relaxed need for knowledge of time. Its primary need is to ensure that the information it presents to the pilot represents the current situation; and that the targeting data that it computes for the weapon delivery subsystem is for some time in the future. But the time that is used in the algorithm itself as part of the interpretation of the sample data is the time attached to that data by the sensor subsystems. So the processing subsystem probably has no need for a direct hardware-based tagging of information.

As a final comment, if the adjustment for oscillator frequencies (see H.2.4.3) is desired, but the sensor nodes have no embedded processor to apply the adjustment factors, the simple Time A1 value indicated in figure H.15 could be replaced by the following tuple:

a) Counter
b) ELS_value $_{n}$
c) ELS_value $_{n-1}$
d) ELS_arrived $_{n-1}$

Of course, the hardware in the sensor that attaches this tuple to the data set should be able to do an atomic reading of all components of the tuple so that values in the tuple are coherent.

Algorithms in the processing subsystem could then apply the adjustment algorithms separately for each sensor before using the time tag in its tracking and targeting algorithms.

Copyright International Organization for Standardization
Provided by IHS under license with ISO
No reproduction or networking permitted without license from IHS Not for Resale

# Annex I
(informative)

# Speed Negotiation details

## I.1 Scope

This annex contains supplementary information on the goals, assumptions, and methodology for the design of the Speed Negotiation algorithm specified in clause 28 of this standard.

## I.2 Basic assumptions

The speed negotiation method is based on the following set of assumptions.

a) The objective is to find the highest common speed that actually operates for all elements in the Fibre Channel link involved in the speed negotiation.
   Functionality is demanded from the entire link at the speed selected including all cables, connectors, hubs, transceivers, Serdes, and conversion devices. The design capabilities of the components are not sufficient criteria for acceptance – actual hardware is required to perform.
b) Error free Transmission Word synchronization for 1 000 Transmission Word times is an adequate quality measure for speed negotiation purposes. This is not the same as verifying operation at the Fibre Channel bit error rate.
c) Link quality issues detected after the speed has been determined are addressed by other means.
d) Once a speed has been negotiated, it is permissible that the speed not be changed after conditions are improved such that operation at a higher speed would now be possible. Forcing a re-negotiation is done with higher level protocols or out-of-band.
e) Speed negotiation concludes promptly unless it is physically impossible for any common speed to exist.
f) Only point-to-point topology is supported.
   Loop configurations that negotiate speeds are assumed to present a single port to the other negotiating port for speed negotiation purposes.
g) Ports capable of speed negotiation are not required to support a common 1Gbits/s speed.
h) The transmitter and receiver of a port are assumed to be capable of working at different speeds at the same time during speed negotiation.
i) A port is assumed to negotiate among up to a maximum of any four speeds.
j) The speed negotiation method is independent of and compatible with the link protocol (e.g., OLD_PORT versus FC-AL)
k) The same speed negotiation method supports both copper and optical ports.
l) The algorithm is realizable in a host driver or in port firmware.
m) The algorithm assumes loop infrastructure (e.g., hub) that has a port attachment scheme that supports sensing of the operating speed of the infrastructure by the attaching port receiver. This port attachment scheme prevents the attaching port transmitter from connecting into the existing infrastructure unless the proper speed is established.
n) As an option to negotiating each hub port per the algorithm, multiple speed hubs may be set to a single speed during speed negotiation by some out-of-band means.
o) Connection of Speed Negotiating ports to an operating set of devices does not disrupt the operation of those devices unless the ports being connected are transmitting at their speed.
p) Once a particular speed has been established speed negotiation is not attempted again unless a LINK FAILURE is detected or by means outside the scope of this standard.
q) The algorithm supports speed determination by ports attached to ports that operate only at any single speed or with loops that have been set to a single speed by means not specified in this standard.

Copyright International Organization for Standardization
Provided by IHS under license with ISO
No reproduction or networking permitted without license from IHS Not for Resale

r) Speed negotiation completes within 2,6 s. If the speed negotiation does not complete within 2,6 s no common speed exists.
Speed negotiation usually completes in less than 1 s if there is any speed common among both ports and the cable plant. The full 2,6 s may be required in the following cases:
A) where the slow-wait stage is used; or
B) special cases when both ports are negotiating and only the lowest (common) speed is supported by the cable plant.

## I.3 Supported configuration

There are three cases supported by the algorithm as shown in figure I.1.

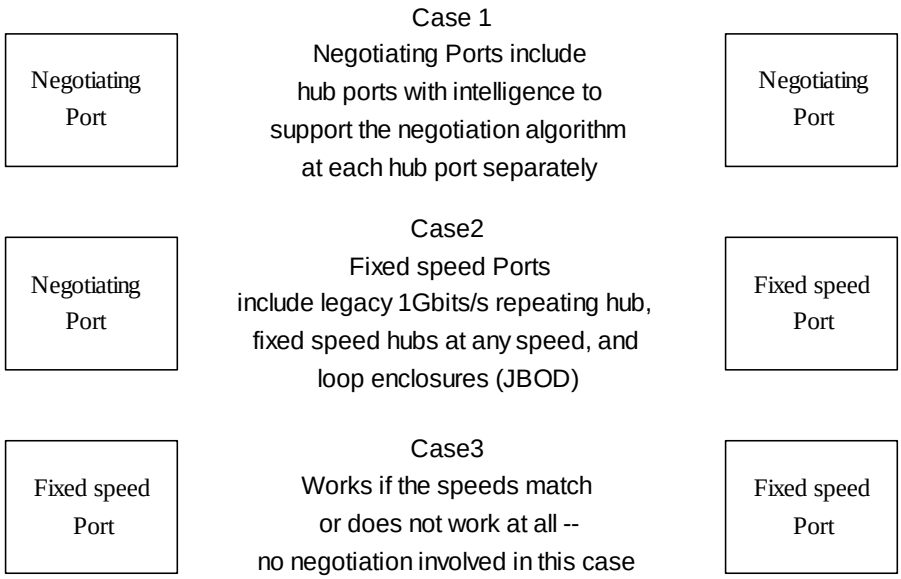


**Figure I.1 - Three configurations supported by the speed negotiation requirements**

Speed Negotiation is defined only between directly connected pairs of ports. This means that multi port entities (e.g., hubs and JBODs) have significant restrictions when used with the speed negotiation algorithm. Specifically, hub ports either are assumed to be capable of executing the speed negotiation algorithm independently for every hub port or the hub speed is fixed at the same value for all ports. For JBODs the entire enclosure is assumed to be presented to the attached loop port as a single speed negotiating loop port or the entire population of devices within the JBOD enclosure is assumed to be fixed speed.

## I.4 Derivation of timing requirements and characteristics

### I.4.1 Introduction and diagram conventions

In this subclause the derivation of the timing requirements is shown. The derivations used in this subclause may not be mathematically rigorous for some parameters. They do, however, represent the best engineering judgment available and have been borne out by extensive simulations.

The examples in I.4 attempt to describe extreme cases for the timing parameters and as such involve marginal conditions and timings.

Copyright International Organization for Standardization
Provided by IHS under license with ISO
No reproduction or networking permitted without license from IHS Not for Resale

The timing diagrams in I.4 use the notational conventions listed here

a) Each number represents a speed (SP#). x represents a speed other than the incoming speed (states 26,27, etc.).
b) Letters represent major stages or modes of the algorithm. Different type case is used for the different stages to enable easier graphical visualization.
c) Some timing examples show approximate timing and may not exactly match the numerical values
d) w indicates Wait_for_signal stage; s indicates Slow_wait stage; M indicates Negotiate_master stage; F indicates Negotiate_follow stage; n indicates Normal operation.
e) **Bold/underline** indicates a successful result from a Pass sync_test (>1 000 error free Transmission Words, etc.)
f) Underline without bold indicates just missing passing a Pass sync_test for any reason.
g) *Italics* indicates legacy hub disruption between cable connection and completion of algorithm.

Time values a) through e) are used in the graphical and analytical explanations. The derivation of these values follows:

a) 30 ms = t_rxcycl (max).
b) 184 ms = t_txcycl + t_rcycl (max). This is maximum duration of a transmit speed in Wait_for_signal.
c) 156 ms = t_txcycl + t_rxcycl (min). This is the minimum duration of a transmit speed in Negotiate_master.
d) 214 ms = t_txcycl + 2 times t_rxcycl (max). This is the maximum duration of a transmit speed in Negotiate_master.
e) 247 ms = t_stbl + t_rcycl (max). This is the maximum length of time a port transmits at a single speed in Negotiate_follow while receiving a stable input signal.

These are examples. Other configurations and/or sequencing may lead to the same results.

### I.4.2 Receiver cycle time, t_rxcycl

The minimum for this timing value is 2 ms that allows receiver stabilization time plus margin. The maximum is 30 ms that allows for responsiveness of the current generation of firmware implementations.

### I.4.3 Master transmitter cycle time, t_txcycl

= 5*(t_rxcycl (max)+n*100 μs)+1 ms (for FC-PI_settling)+margin

= 5* (30 +5*0,1) + 1 + 0.5 = 154 ms

5 comes from Negotiate_master wherein 4 speeds + the transmit speed is tested in block 27. n represents the number of blocks while cycling around block 21 in Negotiate_master: n = 5 because the sequence through state 24, state 25, state 23, state 2C, and state 22 represents the maximum delay path.

### I.4.4 Speed stability time, t_stbl

t_stbl is designed to be of sufficient duration to insure that the other transmitter is no longer changing speeds. The maximum transmitter speed duration occurs in Negotiate_master. T_stbl is found by adding the time required to execute State 23 and State 27. A safety factor (3ms) is added to ensure that the tolerances in executing State 23 and State 27 do not allow ambiguity. The execution time for State 23 is found by adding t_txcycl (154 ms) to the maximum t_rxcycl (30 ms). An additional maximum t_rxcycl (30 ms) execution time is added by state 27. Therefore:

t_stbl = 154 ms + 30 ms + 30 ms + 3 ms = 217 ms

### I.4.5 Watchdog timer threshold, t_fail

With properly implemented equipment, Passing the Pass sync_test should occur regularly until speed negotiation is completed. T_fail is used as a watchdog to indicate that occurrences of successful Pass sync_tests are spaced

Copyright International Organization for Standardization
Provided by IHS under license with ISO
No reproduction or networking permitted without license from IHS Not for Resale

too far apart in time, that something is wrong, and speed negotiation should be restarted. This analysis determines the minimum value for t_fail by analyzing the maximum time required to pass the Pass sync_test after entering Negotiate_master (from Wait_for_signal or Slow_wait).

In most parts of the algorithm the transmitter cycles regularly through the speeds it supports, however, this may be prolonged in the transition into the Negotiate_master stage. This scenario is used in the analysis.

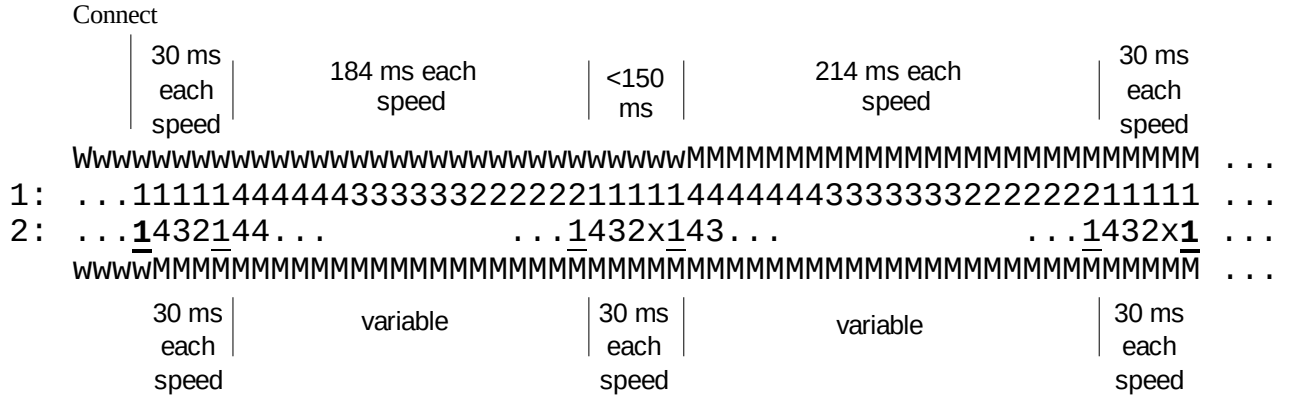


**Figure I.2 - Example worst case timing for t_fail**

These conventions and assumptions apply to figure I.2, figure I.3, and figure I.4.

a) The 1st row (1:) is the incoming speed received from the other port, Port 1.
b) The 2nd row (2:) is the Rx speed of the receiving port, Port 2.
c) The cable plant into Port 2 only supports SP1. It was connected just ahead of the beginning of the numbered sequence.
d) Port 2 detects Port 1 just after the beginning of the sequence.
e) Port 1 detects Port 2 in the middle of the sequence (i.e., a cable plug event) with Rx_LOS false indicated by the change from Wait_for_signal to Negotiate_master.

Figure I.2 shows that the first occurrence of the next Pass sync_test may occur up to 1 614 ms after entry into Negotiate_master, the event that starts $t_{neg}$. Adding comfortable margin brings t_fail to 1 620 ms. Although detection of Port 1 is shown with Pass sync_test, for purposes of t_fail there is no difference if it is accomplished by Rx_LOS false.

### I.4.6 Watchdog Timer test delay, t_wddly

The delay that is designed to be included in each cycle of the watchdog timer test loop is not critical. There is no requirement for a nonzero lower limit on the delay between watchdog timer tests. The choice of its upper limit balances two objectives:

a) the value of t_ncycl may be reduced by keeping the maximum t_wddly small; and
b) it should be large enough to allow an attractively simple implementation of the watchdog test that embeds it in the main algorithm adjacent to each Pass sync_test.

This implementation leads to the interval between successive watchdog tests being the duration of a Pass sync_test (t_rxcycl) plus the delay associated with execution of the maximum code that separates two successive Pass sync_test instances (a few hundred μs). To allow this, t_wddly is permitted to range up to a small margin above the maximum t_rxcycl.

$0 \leq$ t_wddly $\leq$ t_rxcycl (max) + margin = 32 ms

--`,,```,,,,````-`-`,,`,,`,`,,`---

Copyright International Organization for Standardization
Provided by IHS under license with ISO
No reproduction or networking permitted without license from IHS Not for Resale

### I.4.7 Speed recording time, t_ncycl

Due to some system configurations with ports that are capable of three or four speeds but share only one or two common speeds (e.g., due to a limiting cable plant), it is possible for speed negotiation to become prolonged. If this behavior is observed, negotiation may be hastened by reducing the list of transmitted speeds to match the list of detected receiver speeds. T_ncycl is used to determine that sufficient time has passed to have seen all possible speeds and to reduce the transmit speed list. This analysis determines the minimum value for t_ncycl by analyzing the maximum time required to record all speeds after exiting Wait_for_signal (or Slow_wait)

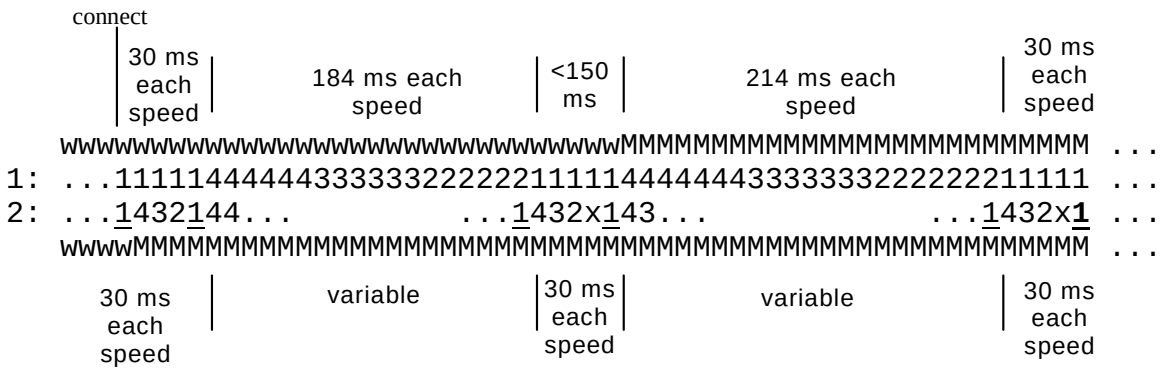


**Figure I.3 - Example worst case timing for t_ncycl using Rx_LOS**

Conventions and assumptions a) - e) in I.4.5 apply to figure I.3

Port 2 detects a signal, not necessarily at the receiver speed, with Rx_LOS instead of using the Pass sync_test at the beginning of the sequence (i.e., Rx_LOS false causes entry into Negotiate_master, the event that starts $t_{neg}$, but no speed is recorded).

The requirement for t_ncycl is the same as for t_fail: 1 614 ms. However, certain fault cases may result in no speeds being detected during t_ncycl. To avoid the need for special logic for these cases, t_ncycl is extended to exceed the maximum possible watchdog timer expiration interval. This assures the watchdog timer triggers restart before the speed-reduction logic terminates without a speed.

t_ncycl = maximum [(t_ncycl(above), t_fail + t_wddly)] = 1 652 ms

Any/all other speeds would be detected within this time window.

### I.4.8 Speed recording time initial value, t_ncinit

In the t_ncinit analysis no speed was recorded upon entry into Negotiate_master because Rx_LOS was used. In contrast, if the Pass sync_test is used to enter Negotiate_master, then one speed has already been recorded, and the issue is to determine the minimum time required to observe the remaining speeds.

Copyright International Organization for Standardization
Provided by IHS under license with ISO
No reproduction or networking permitted without license from IHS Not for Resale

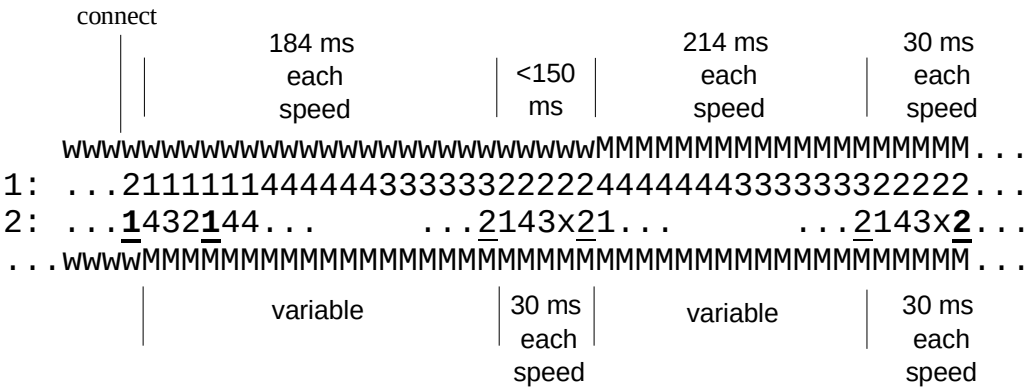


**Figure I.4 - Example worst case timing for t_ncinit using Pass sync_test**

Conventions and assumptions a) - e) in I.4.5 apply to figure I.4

This time turns out to be 1 280 ms, 372 ms shorter than t_ncycl as determined in I.4.7. To add margin, 370 ms is chosen. However, to work in the algorithm, t_ncycl remains at 1 652 ms, and tnc is initialized to 370 ms in state 12 or state 5B as t_ncinit. *A*ny/all other speeds would be detected within the 1 280 ms time window.

### I.4.9 Parameters relating to the optional slow_wait stage:

#### I.4.9.1 Low processing load sleep time, t_sleep

This is maximum duration that the receiver may be cycled slowly on an inactive port. It is constrained only by the need to limit convergence time when a valid speed negotiation signal sequence is presented to a port that previously had no signal. This limit is arbitrarily chosen to be 5 s. Thus, t_sleep is:

= 5 000 ms.

#### I.4.9.2 Slow_wait cycle transmit cycle delay, t_txdly

The limits on the delay that is designed to be included in each cycle of the low processing overhead loop is designed to assure that the time interval of transmission at each speed is sufficient to meet the requirements of a downstream receiver in Negotiate_master stage to detect and record each speed (greater than t_txcycl), and insufficient to trigger the downstream receiver to transition from the Negotiate_follow stage to normal operation (less than t_stbl). Because t_stbl exceeds t_txcycl by 2 times t_rxcycl, the delay may be assured to be in the necessary range by the single test for delay greater than t_txcycle, executed at the maximum sampling interval, t_rxcycl.

$t_txcycl \leq t_txdly \leq t_txcycl + t_rxcycl$

#### I.4.9.3 Periodic sync search wake time, t_wake

The purpose of Slow_wait is to minimize receiver cycling to conserve demands on a processor. The receiver speed is cycled at the much slower rate used for transmitter cycling. However, to reliably detect a signal once one is presented, the device periodically resumes receiver speed cycling at the rate determined by t_rxcycl. The minimum time for cycling the receiver speeds at the rate determined by t_rxcycl to assure detecting an acceptable presented signal is the periodic sync search wake time. This analysis determines the minimum value for periodic sync search wake time by analyzing the maximum time required for the port to synchronize to a signal.

a) Port 1 is the remote transmitter in Negotiate_master.
b) Port 2 is the local (receiver) in Slow_wait wake mode.

Copyright International Organization for Standardization
Provided by IHS under license with ISO
No reproduction or networking permitted without license from IHS Not for Resale

c) The cable is already connected from Port 1 to Port 2 but only SP1 is supported.
d) Port 2 detects Port 1 with the Pass sync_test at the end of the sequence.

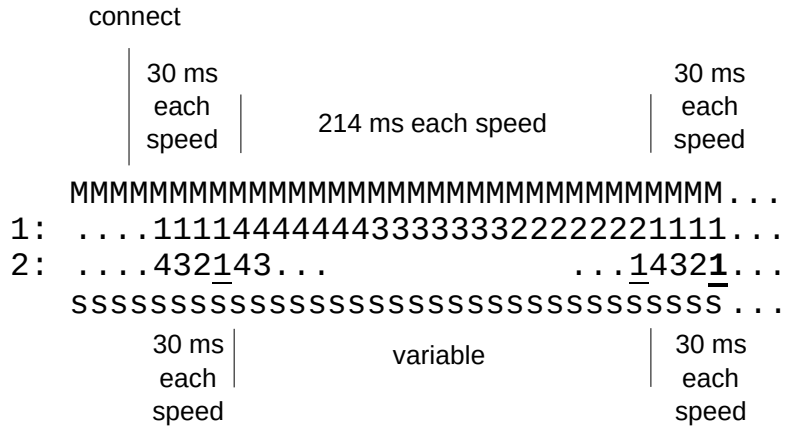


**Figure I.5 - Example worst case timing for t_wake**

Port 2 just missed Port 1 at the beginning of the numbered sequence, but finally catches it at the end. The times add up to 882 ms. This number is rounded up to 900 ms. Rx_LOS could eliminate this time.

### I.4.10 Duration of disruption to single loops caused by connecting speed negotiating ports to hubs

#### I.4.10.1 Introduction

While a port that is not in OLD_PORT state is executing speed negotiation, the port is required to transmit some flavor of LIP. If this transmission is allowed to enter an active loop, it disrupts the operation of the loop. The scope and duration of this disruption may be limited by attaching Speed Negotiating ports to a loop only through hubs with this behavior:

a) If the hub participates in speed negotiation, it prevents disruption until the attached port has completed speed negotiation;
b) If the hub does not participate in negotiation, it is set to a fixed speed by design or by configuration action not specified herein; or
c) If the hub is operating at a fixed speed, it bypasses an attached port that is not presenting a signal at the operating speed of the hub.

A port executing speed negotiation does not disrupt a loop if it is attached to the loop via a negotiating hub or if the port does not support the speed at which a fixed speed hub is operating. However, during speed negotiation with a fixed-speed hub, if a port transmits at the speed of the hub, the hub inserts the port and loop disruption occurs. The following discussion derives the limits on the duration of these disruptions.

In the following discussion, only worst-case timings are presented. The disruption is considered to be the time(s) during which the port prevents normal operation of the loop before the port begins loop initialization.

NOTE Non-simultaneous duplex cable connections:: If the cable plant from the attaching port connects the port's transmitter into the hub's receiver, periodic hub disruption occurs when/while the attaching port is transmitting at the hub's speed. This periodic disruption continues until shortly after the path from the hub's transmitter to the port's receiver is completed with sufficient time to complete speed negotiation before allowing port initialization. Hub disruption is limited to the normal port insertion disruption if the path from the hub's transmitter to the port's receiver is completed with sufficient time to complete speed negotiation before allowing the port's transmitter to be connected to the hub's receiver.

In general, if the path carrying the signal from the hub to the port is completed before the other path from the hub to the port in

Copyright International Organization for Standardization
Provided by IHS under license with ISO
No reproduction or networking permitted without license from IHS Not for Resale

the duplex connection is completed, the port moves through speed negotiation with less, or without, initial disruption caused by the Slow_wait or Wait_for_signal stages.

Normal duplex connections with presently defined connectors do not control the sequencing of the connections.

The derivations here assume a realistic worst case of non-simultaneous cable direction connection where the signal from the port to the hub is presented t_rxcycl prior to the presentation of signal from the hub to the port. This allows up to 30 ms of disruption by the port before speed negotiation allows it to detect and possibly respond to the signal from the hub.

Each stage of speed negotiation may produce one or more disruptions. In some circumstances, the disruptions produced in successive stages may be contiguous, resulting in a longer single disruption. In other circumstances, transitions from one stage to the next may change transmitter speeds, causing the disruption to be discontinuous, but prolonging the overall interval during which disruptions occur. Subclauses I.4.10.2 through I.4.10.12 derive maximum single disruptions and groups of disruptions for each stage of speed negotiation and then uses these values to derive the overall maximum disruption for the speed negotiation process.

In the example figures in I.4.10, the charting conventions introduced in I.4.1 are augmented as follows:

a) The speed line headed H: is for the hub.
b) The speed line headed PT: is for the port transmitter.
c) The speed line headed PR: is for the port receiver.
d) If the stage notation S (upper-case S) is used, it represents the fast-sampling period of the Slow_wait stage, and s in the same line refers specifically to the slow-sampling period of the Slow_wait stage.

### I.4.10.2 Maximum single disruption in Wait_for_signal stage

If the port becomes connected in the Wait_for_signal stage, its receiver is continuously changing and testing speeds at intervals not to exceed t_rxcycl, so speed negotiation allows it to remain in that stage (possibly disrupting) for no more than 4*t_rxcycl = 120 ms after a signal is presented and before it passes the Pass sync_test and transitions to the Negotiate_master stage. Non simultaneous connection may extend the possible disruption by another t_rxcycl to 150 ms. Transmission at any one speed may last as long as 184 ms so the maximum disruption of 150 ms is possible if the connection from port to hub is completed just as both the transmitter and receiver of the port transition to the speed of the hub.

.

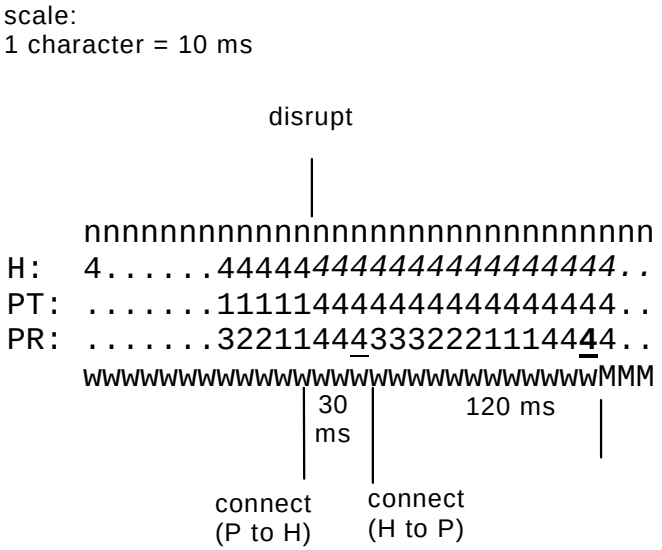


**Figure I.6 - Example of maximum single disruption, Wait_for_signal**

Copyright International Organization for Standardization
Provided by IHS under license with ISO
No reproduction or networking permitted without license from IHS Not for Resale

### I.4.10.3 Maximum single disruption in Slow_wait stage

The maximum single disruption during the Slow_wait stage is limited by the longest transmit time at a single speed. This length disruption is possible if connection is established during the slow-sampling period of the stage when the port is not transmitting at the speed of the hub. When the port's transmit speed reaches the hub's speed, it begins disruption. It transmits at this speed for t_txcycl + t_rxcycl = 184 ms, then tests for and detects sync. It then transitions to the Negotiate_master stage.

.

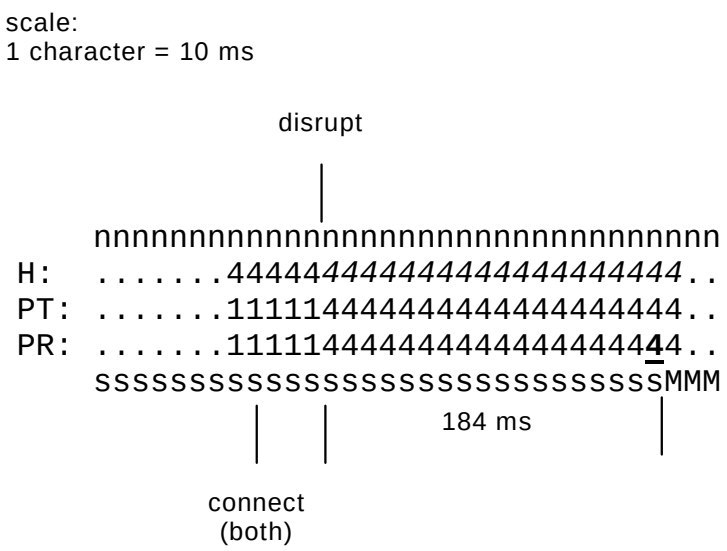


**Figure I.7 - Example of maximum single disruption, Slow_wait**

### I.4.10.4 Maximum single disruption in Negotiate_master stage

The maximum single disruption during the Negotiate_master stage is limited by the stage's maximum transmission time at a single speed (i.e., t_txcycl+2*t_rxcycl = 214 ms). This disruption time occurs if and only if the hub speed is not the maximum port speed. In this case, the transmit speed is set to the maximum speed of the port at the start of the stage, and is decreased periodically. When the port transmitter slows to the speed of the hub, it disrupts. None of the exit conditions for the Negotiate_master stage are met until the port finishes transmitting at the speed of the hub. At that time, it tests and detects the received speed equal to the transmitted speed, so exits to the Negotiate_follow stage.

Copyright International Organization for Standardization
Provided by IHS under license with ISO
No reproduction or networking permitted without license from IHS Not for Resale

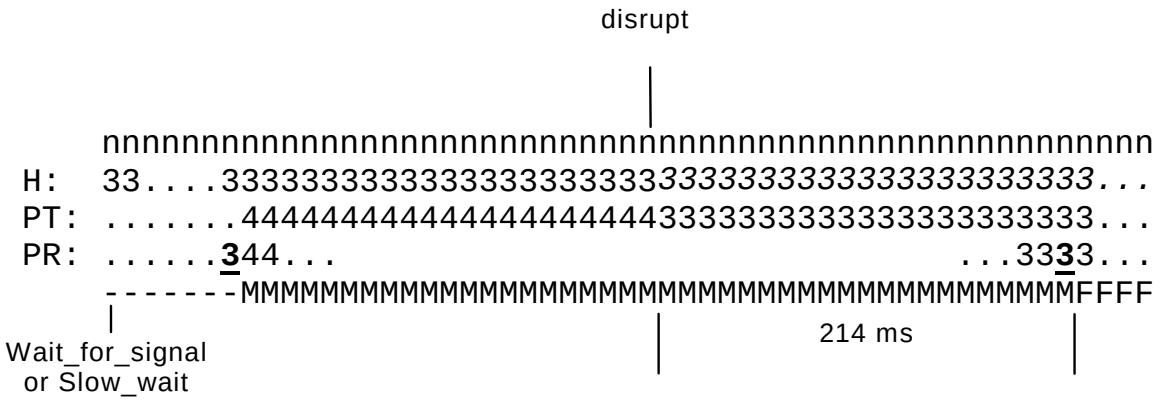


**Figure I.8 - Example of maximum single disruption, Negotiate_master**

By contrast, if the hub speed is equal to the maximum speed of the port, the Negotiate_master stage produces exactly one t_rxcycl = 30 ms of disruption. This is because the port has already synchronized at that speed, so the port enters the Negotiate_master stage with its receiver speed at maximum and its transmitter speed forced to maximum, assuring disruption. At the end of the first receive cycle, it again tests for sync. This time it detects sync at its maximum speed and exits to the Negotiate_follow stage.

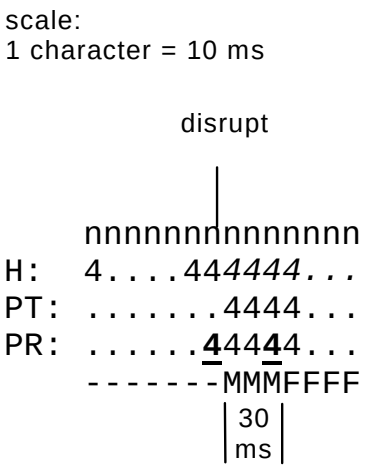


**Figure I.9 - Example where hub is at maximum port speed**

### I.4.10.5 Maximum single disruption in Negotiate_follow stage

Since the upstream port is fixed speed, the Negotiate_follow stage never changes speeds, and tests for and detects sync for t_stbl + t_rxcycl = 247 ms. Since it is entered with the transmitter matching the hub, it disrupts the whole time. This simple case is not charted.

### I.4.10.6 Maximum disruption group - Wait_for_signal

This maximum disruption group consists of the port in Wait_for_signal, first disrupting then not disrupting, for a total of 150 ms. As in the description of Maximum single disruption in Wait_for_signal stage (I.4.10.2), speed negotiation allows the port to remain in the Wait_for_signal stage for no more than 4*t_rxcycl = 120 ms after a signal from the hub and 150 ms from onset of signal to the hub. The disruption pattern may not exceed this duration. If the port transmit speed initially matches the speed of the hub, but changes before the port receiver tests the hub's speed,

Copyright International Organization for Standardization
Provided by IHS under license with ISO
No reproduction or networking permitted without license from IHS Not for Resale

the disruption may be of any duration less than 150 ms followed by a non-disruptive interval up to the balance of the 150 ms. Since the port transmit duration at any single speed is not allowed by speed negotiation to be less than t_txcycl = 154 ms, the port does not change speeds again (potentially disrupting again) before it transitions out of the Wait_for_signal stage.

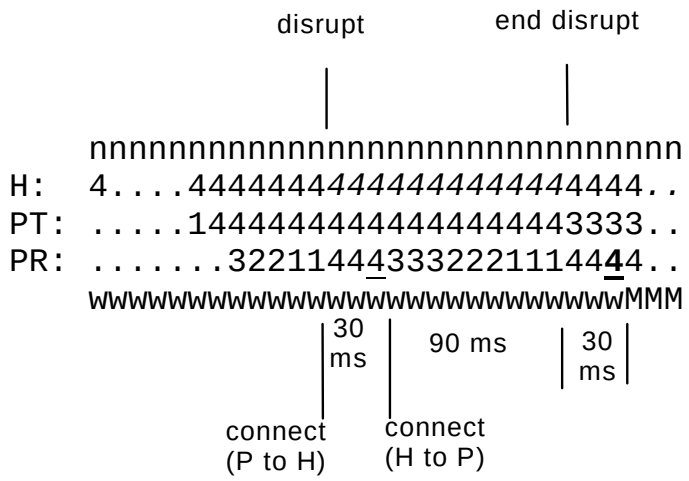


**Figure I.10 - Example of maximum disruption group - Wait_for_signal**

### I.4.10.7 Maximum disruption group - Slow_wait

This maximum disruption group consists of the port in Slow_wait first for 120 ms disruptive followed by 554 ms nondisruptive finally followed by 184 ms disruptive. In this worst case, connection from the port to the hub occurs in the fast-sampling period of the Slow_wait stage while the port is transmitting at the hub's speed, just as the port begins receiving at the hub's speed. Disruption 1 begins. The receive cycle at the hub's speed ends t_rxcycl later, just as the signal from the hub reaches the port too late. Then, 3 * t_rxcycl later, just as the port's receiver is about to sample the hub's speed again, the fast-sampling period ends and the hub's transmit speed changes to its next speed, ending the first disruption but preventing the receiver from staying at the hub's speed into the slow-sampling period. Now in the slow-sampling period, the port transmits and receives in sequence at three speeds other than that of the hub, unable to synchronize but not disrupting, for 3 * t_txcycl. Then the port transmits and receives at the hub's speed, disrupting for another t_txcycl, at the end of which it finally tests and detects sync, and transitions to the Negotiate_master stage. Figure I.11 shows the speed of the hub is not the maximum speed of the port, so when the port begins transmitting at its maximum rate on entry to the Negotiate_master stage, this ends the second disruption.

Copyright International Organization for Standardization
Provided by IHS under license with ISO
No reproduction or networking permitted without license from IHS Not for Resale

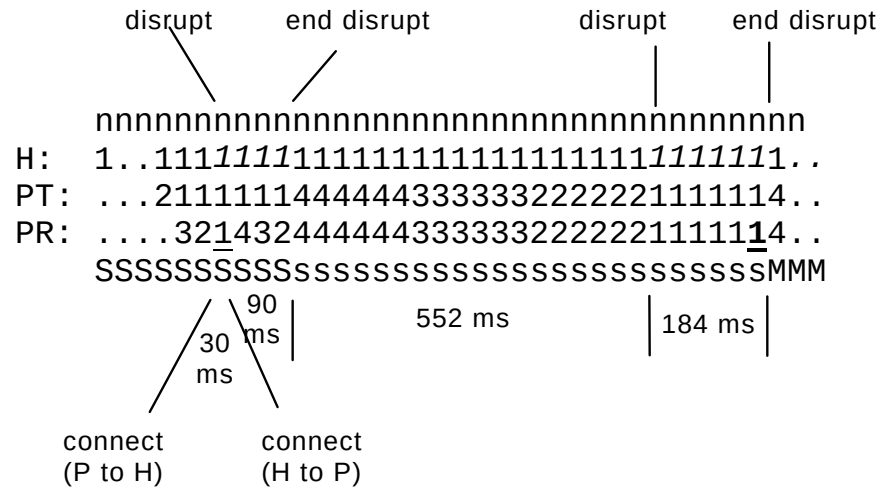


**Figure I.11 - Example of maximum disruption group - Slow_wait**

### I.4.10.8 Maximum disruption group - Negotiate_master

This maximum disruption group consists of the port in Negotiate_master for 642 ms nondisruptive followed by 214 ms disruptive. In the Negotiate_master stage, the port begins to transmit at its maximum speed and (because the port was in sync to transition from the prior stage) it continues to receive at the speed of the hub.

If the operating speed of the hub is the maximum speed of the port, the Negotiate_master stage disrupts for 30 ms and transitions to the Negotiate_follow stage, as discussed in Maximum single disruption, Negotiate_master (see I.4.10.4).

If the operating speed of the hub is not the maximum speed of the port, the hub bypasses the port immediately, terminating any prior disruption. The port transmits in turn at as many as three non-matching speeds, for 3*(t_txcycl + 2*t_rxcycl) = 642 ms. Then it transmits at the speed of the hub, beginning a new disruption. This lasts for t_txcycl + 2*t_rxcycl = 214 ms. At the end of this transmit speed, the port tests and detects sync and therefore transitions to the Negotiate_follow stage. This case is charted in Figure I.12.

Copyright International Organization for Standardization
Provided by IHS under license with ISO
No reproduction or networking permitted without license from IHS
Not for Resale

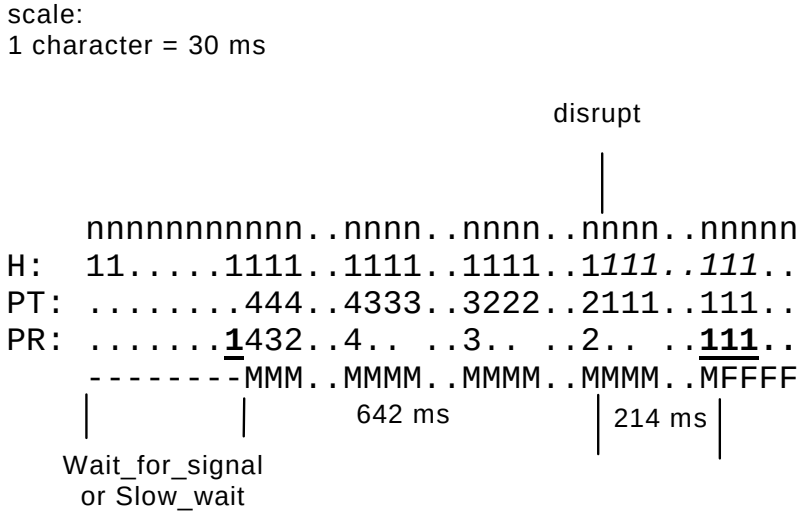


**Figure I.12 - Example of maximum disruption group - Negotiate_master**

### I.4.10.9 Maximum disruption group - Negotiate_follow

This maximum disruption group consists of the port connecting while in Negotiate_follow, causing 247 ms disruption. Since the hub port is fixed speed, the Negotiate_follow stage is entered with the port transmitter set to that speed and the port does not change speeds. The Negotiate_follow stage therefore produces a single disruption that lasts throughout the stage. This case is not charted.

### I.4.10.10 Maximum single disruption overall

A longer disruption may result if a disruption at one stage carries over to the next stage.

Because the transition from the Negotiate_master stage to the Negotiate_follow stage always happens without a speed change, the last disruption in the Negotiate_master stage always is concatenated with the disruption in the Negotiate_follow stage.

The disruption caused in the Wait_for_signal or Slow_wait stages may concatenate to the disruption caused in the Negotiate_master stage only if the hub is operating at the maximum speed of the port (though other conditions may still prevent it). This is because the port forces its transmitted speed to its maximum at the start of the Negotiate_master stage. If this is not the speed of the hub, the port is bypassed, breaking the disruption.

In the case where the hub speed is not the maximum speed of the port, the maximum disruption for the Negotiate_master stage plus the maximum disruption for the Negotiate_follow stage may concatenate to a single disruption of 214 + 247 = 461 ms. This case being straightforward, it is not charted.

In the case where the hub speed is the maximum speed of the port and the port has entered the Slow_wait stage (Wait_for_signal has a shorter disruption), the maximum disruption for the Slow_wait stage plus 30 ms disruption for the Negotiate_master stage plus the maximum disruption for the Negotiate_follow stage may concatenate to 461 ms (i.e., 184 + 30 + 247 = 461).

Copyright International Organization for Standardization
Provided by IHS under license with ISO
No reproduction or networking permitted without license from IHS Not for Resale

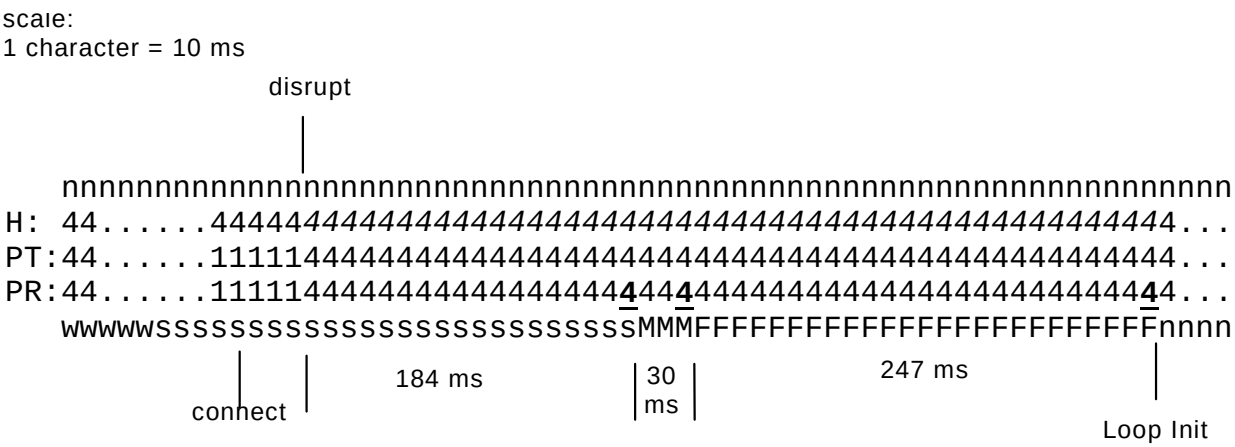


**Figure I.13 - Example of maximum single disruption overall**

### I.4.10.11 Maximum disruption group overall

The maximum disruption group overall consists of three disruptions occurring over a 1 961 ms period. In no case does the port transmit speed change on transition from the Negotiate_master stage to the Negotiate_follow stage, so the lengths of those stages concatenate, but the transition does not introduce an additional period of disruption.

The example worst-case disruption group for the Slow_wait stage exceeds the duration of the example disruption group for the Wait_for_signal stage, and additionally, its exit conditions match the entry conditions for the worst-case disruption group for the Negotiate_master stage, so its duration and number add to those of the Negotiate_master example.

The result is:

a) 120 ms disruptive in the Slow_wait stage, then
b) 554 ms nondisruptive in the Slow_wait stage, then
c) 184 ms disruptive in the Slow_wait stage, then
d) 642 ms nondisruptive in the Negotiate_master stage, then
e) 461 ms disruptive in the Negotiate_master and Negotiate_follow stages.
f) Total = 1 961 ms

NOTE 1 Cable plants: Limits on the cable plant need not be considered in this discussion because the presumptions for this analysis include that the cabling plant supports the speed of the hub and the hub bypasses if presented with a signal at any other speed regardless of the quality of the cabling.

NOTE 2 Use of Rx_LOS: Use of Rx_LOS is permitted during the Wait_for_signal and Slow_wait stages. If it is effective, it greatly reduces the likelihood and maximum length of disruption during those stages. However, the size of the possible improvement is sensitive to cabling capability.

### I.4.10.12 Summary of loop disruption

Attaching a port capable of speed negotiation to an arbitrated loop hub may generate up to three disruptions to existing loop operation. The properties of these disruptions are summarized here.

a) t_disrupt1: The maximum single disruption duration is 461 ms.
b) t_disrupt2: The maximum duration of a series of disruptions is 1 961 ms.

Both single and concatenated series disruption times may be significantly reduced, and the greatest number of disruptions reduced to two, by disabling the Slow_wait stage or by using Rx_LOS (if it is reliable) to initially detect a signal.

Copyright International Organization for Standardization
Provided by IHS under license with ISO
No reproduction or networking permitted without license from IHS Not for Resale

### I.4.11 Algorithm convergence time:

This subclause describes the convergence time properties of the algorithm. Use of this result is beyond the scope of this annex.

The longest convergence time, including Wait_for_signal, is conservatively 2 571 ms (i.e., 11 times the maximum transmitter time (214ms) + t_stbl (217 ms)). The longest convergence time is with both ports capable of negotiating at all four speeds and where the infrastructure only supports the lowest speed. Based on this calculation a maximum convergence time of 2,6 s is used for the speed negotiation algorithm.

Convergence time is the elapsed time between start and stop as defined here.

a) start = the last of (port A beginning speed negotiation, port B beginning speed negotiation connection of port A to port B cable plant, connection of port B to port A cable plant).
b) stop = the latter of (port A entering Normal_operation, port B entering Normal_operation).

If the optional slow_wait stage is implemented and enabled, Slow_wait replaces Wait_for_signal after a negotiation failure. Since Slow_wait is t_sleep of transmit cycling time alternating with logic equivalent to the Wait_for_signal algorithm, the maximum length of Slow_wait is approximately the maximum length of Wait_for_signal plus t_sleep. The net is extending the maximum convergence time by t_sleep, giving about 7,5 s if Slow_wait is enabled.

In the highly unlikely event that the Slow_wait port is actively testing for Transmission Word synchronization just as its attached port is transitioning from a wait stage to Negotiate_master stage, it is possible for the test to fail. This causes an additional delay of up to t_sleep + t_wake = 5 900 ms, extending the convergence time to about 13,5 s.

## I.5 Ports using separate PMD components

This subclause describes the issues with using separate PMD components in a speed agile application. Figure I.14 shows the general relationship of the two ports and the physical architecture within one of the ports.

Copyright International Organization for Standardization
Provided by IHS under license with ISO
No reproduction or networking permitted without license from IHS Not for Resale

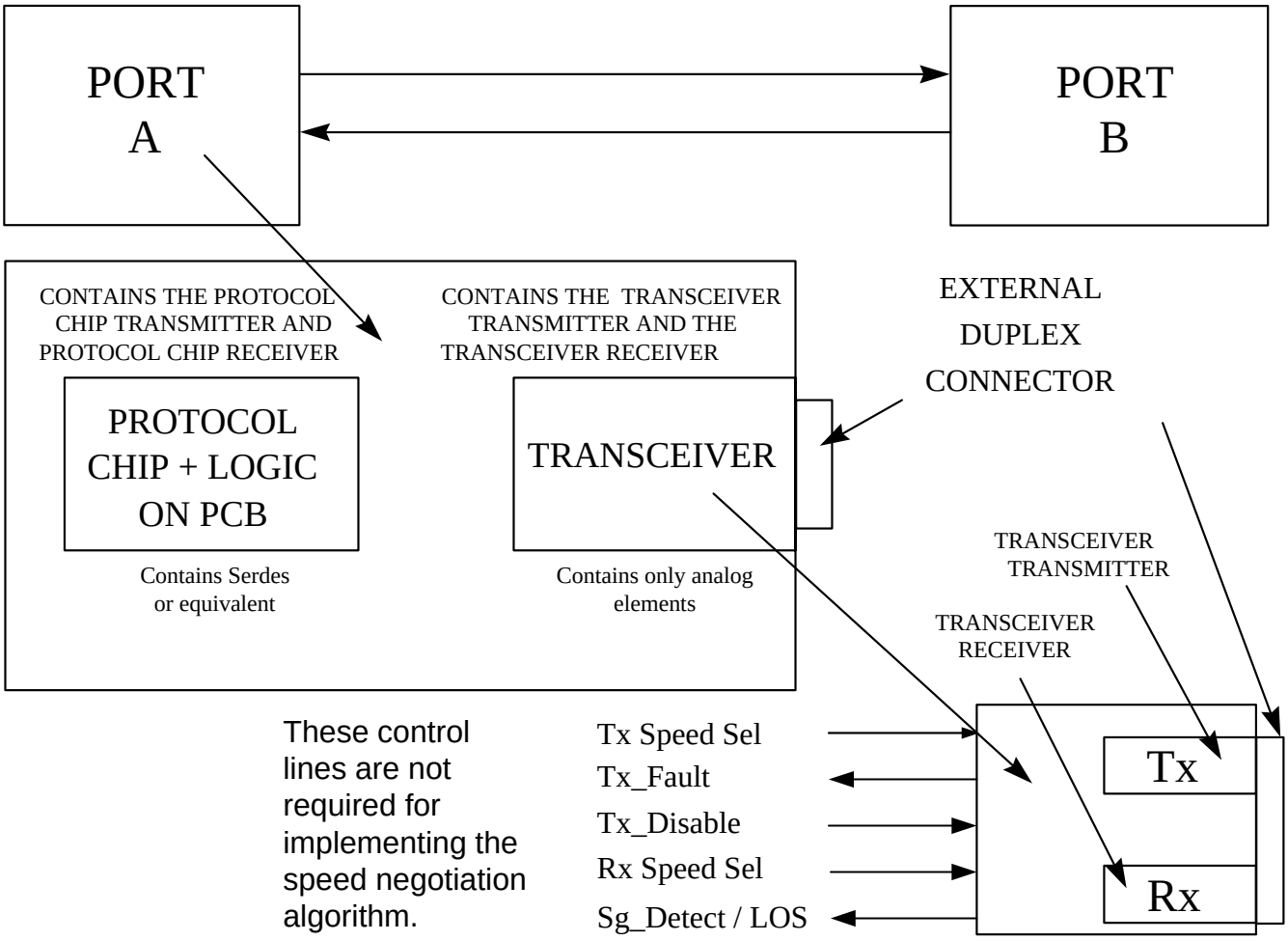


**Figure I.14 - Physical architecture of a port with a separate transceiver component**

If a port uses a separate PMD component (e.g., a removable PMD component such as a GBIC) care is required to ensure that both the port supplier and the PMD component supplier clearly understand what is required to achieve the speed agility and to execute the speed negotiation algorithm.

Signal timings are formally measured at the external duplex port connector. Signal timing properties affected by the speed negotiation algorithm are assumed to match the timings specified in the algorithm where applicable (e.g., speed changes executed in the protocol chip are assumed to show up at the external connector within the allowed time for speed changes). The 1 ms requirement for changing speeds formally applies at the external connector. This assumption is practical because the granularity of the timing requirements for the speed negotiation algorithm are orders of magnitude more coarse than the signal propagation time through normal removable PMD components and the logic. In practice, only the protocol chip and other board logic are capable of enforcing accurate timings so if the separate PMD has time delays of the order of the speed negotiation algorithm timing granularity the assumption of signal timing values applying at the port connector is rendered invalid.

Several additional considerations of separate PMDs are llisted here:

a) The protocol chip and other board logic may be supplied from different sources than the transceiver. In the design of Speed Negotiation, the protocol chip and other board logic were not treated as a unit with the transceiver. Specifications have been placed specifically on one or the other (or both separately) and the use of any control signals have been noted.

--`,,```,,,,````-`-`,,`,,`,`,,`---

Copyright International Organization for Standardization
Provided by IHS under license with ISO
No reproduction or networking permitted without license from IHS Not for Resale

b) There are effectively two transmitters and two receivers in each port. The receiver in the transceiver is termed the transceiver receiver and the receiver in the protocol chip or on the board, but not part of the transceiver is termed the protocol chip receiver. Similarly: transceiver transmitter and protocol chip transmitter.
c) The speed of the transceiver transmitter is controlled by the protocol chip and other board logic by changing the speed of the data signals driven from the protocol chip. However, the launch amplitude and / or other properties of the transceiver transmitter either needs to be:
   A) common to all supported speeds;
   B) a control signal to the transceiver is used to set the amplitude of the transceiver transmitter; or
   C) internal circuitry within the transceiver senses the incoming bit rate and adjusts the amplitude accordingly.

NOTE 1 The requirements for full speed and double speed are not mutually exclusive (i.e., it is possible to design a transceiver transmitter that meets both the full speed and the double speed requirements without any change).

d) The speed of the transceiver receiver is similarly controlled by either:
   A) having the transceiver receiver specifications common to all supported speeds;
   B) a control signal to the transceiver is used to set the properties of the transceiver receiver; or
   C) internal circuitry within the transceiver senses the incoming bit rate and adjusts the receiver parameters accordingly.

NOTE 2 The requirements for full speed and double speed are not mutually exclusive (i.e., it is possible to design a transceiver receiver that meets both the full speed and the double speed requirements without any change). For any speeds higher than double speed the transceiver receiver needs to change its properties in order to meet the transceiver receiver requirements.

## I.6 Implementation notes

The Slow_wait stage described in 28.6.6 may be implemented as a means of reducing processing time required to poll ports that remain unconnected or unused for extended periods of time. The speed negotiation algorithm may also be disabled for ports determined to be inactive by methods not controlled by this standard, such as:

a) Commands from an out of band management system;
b) Hardware jumpers;
c) Using a signal detect function (Rx_LOS) to detect when a connection is made (may not be a reliable indication that the Tx side is connected and requires that the opposite connected port be transmitting in a manner that allows signal detection to function); or
d) Using an automatic sensing of connector retention engagement or the presence of a removable PMD device to sense plausible device attachment (does not guarantee that the opposite end of the link is connected).

Copyright International Organization for Standardization
Provided by IHS under license with ISO
No reproduction or networking permitted without license from IHS Not for Resale

# Annex J
(informative)

## IEEE company_ID

The IEEE Registration Authority for a fee provides a registered number that is guaranteed to be unique. The unique number may be provided in either of two formats, depending on the requirements of the manufacturer. The number is provided as a 6 hexadecimal number value as the IEEE company_id. The number is provided as three hexadecimal-digit pairs in canonical form representing the 3 octets of the 24-bit number as the IEEE Organizationally Unique Identifier (OUI). A manufacturer for all its products that use an IEEE registration uses the same number. A manufacturer shall base all its identifiers on the same number, even if the identifiers have different formats. A manufacturer shall not purchase a new company_id until at least one of the identifier spaces using the company_id is substantially exhausted. Other identifier spaces shall continue using the original company_id until they are also exhausted.

The IEEE Registration Authority may be contacted at http://standards.ieee.org/regauth/oui/index.shtml or

IEEE Registration Authority
IEEE Standards Dept.
445 Hoes Lane, P.O. Box 1331
Piscataway, NJ 08855-1331

Copyright International Organization for Standardization
Provided by IHS under license with ISO
No reproduction or networking permitted without license from IHS Not for Resale

# Annex K
(informative)

# WWN-to-EUI-64 Mapping

## K.1 Background

To permit the interoperable implementation of bridges between Fibre Channel and other technologies that use EUI-64 as addressing format, there is the need for a standard method to map EUI-64 addresses in FC WWNs and vice versa. See 14.9 on how to solve the problem of how to map EUI-64 addresses in FC WWNs, permitting to a FC bridge to give a unique FC name to non-FC devices. However, there is still the need of a standard method to map FC WWNs in EUI-64 addresses, to permit to a bridge to map FC devices over the non-FC network.

Another reason to define this mapping is the fact that vendors require a method to avoid the assignment of overlapping names on the EUI-64 address space and in the FC name space. Several techniques may be used to rearrange a FC WWN in a EUI-64 address, and this may lead to several EUI-64 addresses derived from the same FC WWN. Standardizing a single method allows to map one FC WWN in a single EUI-64 address.

## K.2 Solution

This algorithm defines a mapping of the most widely used FC Name_Identifier formats to EUI-64 addresses. The considered formats are:

a) IEEE 48 bit address (NAA = 1)
b) IEEE Extended (NAA = 2)
c) IEEE Registered (NAA = 5)

The first step is to rearrange the FC WWN in a EUI-64 address. In this manner each FC WWN is mapped in a single EUI-64 address shown in tables K.1, K.2, K.3, K.4, K.5 and K.6.

**Table K.1 - IEEE 48 bit address WWN format**

| Bits<br>Word | 31 .. 28 | 27 .. 24 | 23 .. 16 | 15 .. 08 | 07 .. 00 |
|---|---|---|---|---|---|
| 0 | NAA = ’0001’ b | ’0000 00000000’ b | | OUI | |
| 1 | OUI | | VSID | | |

**Table K.2 - Mapped EUI-64 address**

| Bits<br>Word | 31 .. 12 | 11 .. 08 | 07 .. 04 | 03 .. 00 |
|---|---|---|---|---|
| 0 | OUI | | NAA = ’0001’ b | VSID |
| 1 | VSID | ’0000 00000000’ b | | |

--`,,```,,,,````-`-`,,`,,`,`,,`---

Copyright International Organization for Standardization
Provided by IHS under license with ISO
No reproduction or networking permitted without license from IHS Not for Resale

**Table K.3 - IEEE Extended WWN format**

| Bits Word | 31 .. 28 | 27 .. 24 | 23 .. 16 | 15 .. 08 | 07 .. 00 |
|---|---|---|---|---|---|
| 0 | NAA = ’0010’ b | Vendor Specific | | OUI | |
| 1 | OUI | | VSID | | |

**Table K.4 - Mapped EUI-64 address**

| Bits Word | 31 .. 12 | 11 .. 08 | 07 .. 04 | 03 .. 00 |
|---|---|---|---|---|
| 0 | OUI | | NAA = ’0010’ b | VSID |
| 1 | VSID | Vendor Specific | | |

**Table K.5 - IEEE Registered WWN format**

| Bits Word | 31 .. 28 | 27 .. 04 | 03 .. 00 |
|---|---|---|---|
| 0 | NAA = ’0101’ b | OUI | VSID |
| 1 | VSID | | |

**Table K.6 - Mapped EUI-64 address**

| Bits Word | 31 .. 08 | 07 .. 04 | 03 .. 00 |
|---|---|---|---|
| 0 | OUI | NAA = ’0101’ b | VSID |
| 1 | VSID | | |

If this mapped EUI-64 address has to be used by a bridge, and the vendor who assigned the FC WWN did not assign consistently the EUI-64 addresses in other devices that he manufactured, then there is the possibility that the EUI-64 address derived from the FC WWN conflicts with a “native” EUI-64 address. To solve this collision, a possible solution is to set to 1 the Universal/Local bit in the OUI part of the WWN in the mapped EUI-64 address. This is permitted per [4], ISO/IEC 8802-1.

## K.3 Case Study

Consider the following case study to show how the algorithm works. Three hosts have globally unique names WWN(A), WWN(C) and EUI-64(B) as shown in figure K.1.

--`,,```,,,,````-`-`,,`,,`,`,,`---

Copyright International Organization for Standardization
Provided by IHS under license with ISO
No reproduction or networking permitted without license from IHS Not for Resale

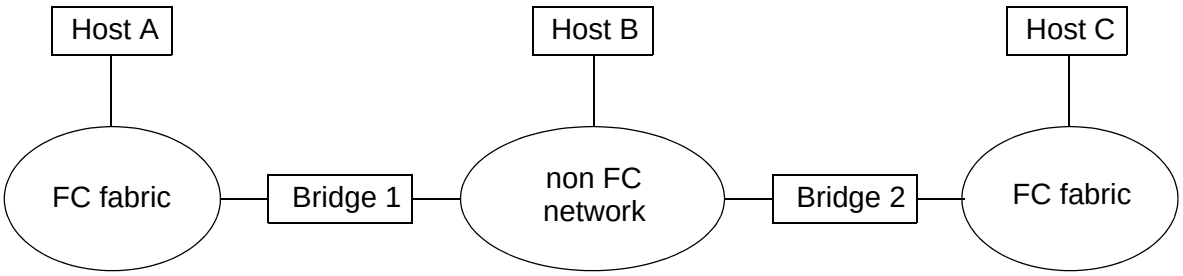


**Figure K.1 - Case Study**

Bridge 1 maps, in the non FC network, WWN(A) in a “local” EUI-64(A), with the local bit set, and Bridge 2 does the same for WWN(C), obtaining a “local” EUI-64(C) address. Being the WWNs globally unique, as the EUI-64 addresses connected to the non-FC network, there are no address conflicts on this network.

Bridge 1 maps, in the FC fabric, EUI-64(B) in a WWN(B) using the rules defined 14.9, and, recognizing the local bit set to 1, the “local” EUI-64(C) in WWN(C). So, there are no name conflicts in the first FC fabric.

Bridge 2 performs the corresponding functions for the second FC fabric, and also in this case there are no name conflicts.

Copyright International Organization for Standardization
Provided by IHS under license with ISO
No reproduction or networking permitted without license from IHS Not for Resale

## Bibliography

[27] ANSI INCITS 230-1994-1994 (R1999), *Information technology - Fibre Channel – Physical and Signalling Interface (FC-PH)*

[28] ANSI INCITS 230-1994/AM1-1996 (R2001), *Information technology - Fibre Channel – Physical and Signalling Interface (FC-PH) – Amendment 1*

[29] ANSI INCITS 230-1994/AM2-1999, *Information technology - Fibre Channel – Physical and Signalling Interface (FC-PH) –*
*Amendment 2*

[30] ANSI INCITS 297-1996 (R2002), *Information technology - Fibre Channel - Physical and Signalling Protocol - 2 (FC-PH-2)*

[31] ANSI INCITS 303-1998, *Information technology - Fibre Channel – Physical and Signalling Protocol - 3 (FC-PH-3)*

[32] ANSI INCITS Project 1569-D, *Fibre Channel - Single Byte Command Set - 3 (FC-SB-3)*, Revision 1.4, March 17, 2003

The following list describs the general structure of SCSI, which were valid at the time of publication.

| **Physical Interconnects** | | |
|---|---|---|
| ADP | *Automation/Drive Interface - Physical Layer* | T10/1556 -D |
| FC-AL | *Fibre Channel Arbitrated Loop* | ANSI X3.272:1996 |
| FC-AL-2 | ISO/IEC 14165-122: *Information technology – Fibre Channel – Part 122: Arbitrated Loop-2* (FC-AL-2) | ANSI NCITS.332:1999] |
| FC-100-D F-EL-S | ISO/IEC 14165-114: *Information technology - Fibre Channel – Part 114: 100 MB/s copper physical interface* | |
| FC-PI | ISO/IEC 14165-115 (under development), *Information technology – Fibre Channel – Part 115: Physical Interfaces (FC-PI)* | NCITS1235-D |
| FC -PI -2 | *Fibre Channel Physical Interfaces-2* | T11/1506 -D |
| FC-PH | *Fibre Channel Physical and Signalling Interface* | ANSI X3.230:1994 |
| | *Fibre Channel Physical Amendment 1* | ANSI X3.230/ AM1:1996 |
| FC-PH-3 | Fibre Channel 3rd Generation Physical Interface | ANSI X3.303 -1998 |
| FC-FS | ISO/IEC 14165-251 (under development): *Information technology - Fibre Channel – Part 251: Fibre Channel Framing and Signaling Interface* (FC-FS) | T11/1331 -D |
| | *High Performance Serial Bus* | ANSI IEEE 1394:1995 |
| | *High Performance Serial Bus* (supplement to ANSI IEEE 1394:1995 | ANSI IEEE 1394a:2000 |

--`,,```,,,,````-`-`,,`,,`,`,,`---

Copyright International Organization for Standardization
Provided by IHS under license with ISO
No reproduction or networking permitted without license from IHS Not for Resale

| | | |
|---|---|---|
| SPI-2 | ISO/IEC 14776-112:2002-05, *Information technology – Small Computer System Interface (SCSI) – Part 112:SCSI Parallel Interface-2 (SPI-2)* | ANSI X3.302:1999 |
| SPI-3 | ISO/IEC 14776-113:2002-08, *Information technology – Small Computer System Interface (SCSI) – Part 113: SCSI Parallel Interface-3 (SPI-3)* | ANSI NCITS.336:2000 |
| SPI-4 | ISO/IEC 14776 -114, *(under development) Information technology – Small Computer System Interface (SCSI) – Part 114: Parallel Interface -4 (SPI-4)* | ANSI INCITS.362 -200x |
| SPI-5 | ISO/IEC 14776-115:2004-11, *Information technology – Small Computer System Interface (SCSI) – Part 115: SCSI Parallel Interface-5 (SPI-5)* | T10/1525 -D |
| SSA-PH | *Serial Storage Architecture Physical Layer 1* | ANSI X3.293:1996 |
| SSA-PH-2 | *Serial Storage Architecture Physical Layer 2* | ANSI NCITS.307:1998 |
| SAS | ISO/IEC 14776-150:2004-11, *Information technology – Small Computer System Interface (SCSI) – Part 150: Serial Attached SCSI (SAS)* | T10/1562 -D |
| **SCSI transport protocols** | | |
| ADT | *Automation/Drive Interface – Transport Protocol* | T10/1557 -D |
| SSA-TL-1 | Serial Storage Architecture Transport Layer 1 | ANSI X3.295:1996 |
| SSA-TL-2 | Serial Storage Architecture Transport Layer 2 | ANSI NCITS.308:1998 |
| FCP | ISO/IEC 14776-221, (under development) and replaced by 14776-222, SCSI -3 Fibre Channel Protocol *(FCP)* | ANSI X3.269:1996 |
| FCP-2 | ISO/IEC 14776-22, (under development) and replaced by 14776-223, SCSI -3 Fibre Channel Protocol second version *(FCP-2)* | T10/1144 -D |
| FCP-3 | ISO/IEC 14776-223, (under development) *Information technology – Small Computer System Interface (SCSI) – Part 223: SCSI Fibre Channel Protocol-3 (FCP-3)* | T10/1560 -D |
| SBP-2 | ISO/IEC 14776-232:2001-11, *Information technology – Small Computer System Interface (SCSI) – Part 232:Serial Bus Protocol 2 (SBP-2)* | ANSI NCITS.325:1999 |
| SBP-3 | ISO/IEC 14776–233:(under development), *Information technology - Small Computer System Interface (SCSI) – Part 233: Serial Bus Protocol-3 (SBP-3)* | T10/1467 -D |
| SSA-S2P | *Serial Storage Architecture SCSI-2 Protocol* | ANSI X3.294:1996 |
| SSA-S3P | *Serial Storage Architecture SCSI-3 Protocol* | ANSI NCITS.309:1998 |
| SRP | *SCSI RDMA Protocol* | T10/1415 -D |
| SST | *SCSI on Scheduled Transfer* | T10/1380 -D |

--`,,```,,,,````-`-`,,`,,`,`,,`---

Copyright International Organization for Standardization
Provided by IHS under license with ISO
No reproduction or networking permitted without license from IHS Not for Resale

| | | |
|---|---|---|
| SVP | *SCSI VI Protocol* | T10/1415 -D |
| **Shared command sets** | | |
| SPC | SCSI -3 Primary Commands | ANSI X3.301:1997 |
| SPC-2 | ISO/IEC 14776-452, (under development) *Information technology - Small Computer System Interface (SCSI) – Part 452: SCSI Primary Commands-2 (SPC-2)* | ANSI NCITS.351-2001, T10/1236 -D |
| SPC-3 | ISO/IEC 14776-453, (under development) *Information technology – Small Computer System Interface (SCSI) – Part 453: SCSI Primary Commands-3 (SPC-3)* | T10/1416 -D |
| **Device -type specific command sets** | | |
| SBC | ISO/IEC 14776-321:2002-08, *Information technology – Small Computer System Interface (SCSI) – Part 321: SCSI -3 Block Commands (SBC)* | ANSI NCITS.306:1998 |
| SBC-2 | ISO/IEC 14776-322:(under development), *Information technology – Small Computer System Interface (SCSI) – Part 322: SCSI Block Commands-2 (SBC-2)* | T10/1417 -D |
| SSC | ISO/IEC 14776-331:2002-09, *Information technology – Small Computer System Interface (SCSI) – Part 331: SCSI -3 Stream Commands (SSC)* | ANSI NCITS.335:2000 |
| SSC-2 | ISO/IEC 14776-33, (under development) *Information technology - Small Computer System Interface (SCSI) – Part 332SCSI Stream Commands-2 (SSC-2)* | T10/1434 -D |
| SMC | ISO/IEC 14776-351, (under development) *Information technology - Small Computer System Interface (SCSI) – Part 351: SCSI-3 Medium Changer Commands (SMC)* | ANSI NCITS.314:1998 |
| SMC-2 | ISO/IEC 14776 -352, (under development) *Information technology - Small Computer System Interface (SCSI) – Part 252: SCSI Medium Changer Commands -2 (SMC-2)* | T10/1383 -D |
| MMC | SCSI -3 Multimedia Command Set | ANSI X3.304:1997 |
| MMC-2 | ISO/IEC 14776-362:(under development), *Information technology - Small Computer System Interface (SCSI) – Part 362: SCSI Multimedia Command Set -2 (MMC-2)* | ANSI NCITS.333:2000 |
| MMC-3 | ISO/IEC 14776-363, (under development) *Information technology - Small Computer System Interface (SCSI) – Part 363: SCSI Multimedia Command Set-3 (*MMC-3) | T10/1363 -D |
| MMC-4 | ISO/IEC 14776-364, (under development) *Information technology - Small Computer System Interface (SCSI) – Part 364: SCSI Multimedia Command Set-3 (*MMC-4) | T10/1545 -D |

--`,,```,,,,````-`-`,,`,,`,`,,`---

Copyright International Organization for Standardization
Provided by IHS under license with ISO
No reproduction or networking permitted without license from IHS Not for Resale

| | | |
|---|---|---|
| SCC | ISO/IEC 14776-341:2000-06, *Information technology – Small Computer System Interface (SCSI) – Part 341: SCSI -3 Controller Commands (SCC)* | ANSI X3.276:1997 |
| SCC-2 | ISO/IEC 14776-342:2000-06, *Information technology – Small Computer System Interface (SCSI) – Part 342:SCSI Controller Commands-2 (SCC-2)* | ANSI NCITS.318:1998 |
| RBC | ISO/IEC 14776-326:2002-08, *Information technology – Small Computer System Interface (SCSI) – Part 326: SCSI Reduced Block Commands (RBC)* | ANSI NCITS.330:2000 |
| RMC | SCSI Reduced MultiMedia Commands | T10/1364 -D |
| SES | SO/IEC 14776 -371, (under development) *Information technology - Small Computer System Interface (SCSI) – Part 371: SCSI -3 Enclosure Services Commands (SES)* | ANSI NCITS.305:1998 |
| SES-2 | SO/IEC 14776-372, (under development) *Information technology - Small Computer System Interface (SCSI) – Part 372: SCSI-3 Enclosure Services Commands (SES-2)* | T10/1559 -D |
| OMC | ISO/IEC 14776-381:2000-06, *Information technology - Small Computer System Interface (SCSI) – Part 381: Optical Memory Card device commands (OMC)* | |
| OSD | *Object-based Storage Devices Commands* | T10/1355 -D |
| MSC | *SCSI Management Server Commands]* | T10/1528 -D |
| ADC | *Automation/Drive Interface – Commands* | T10/1558 -D |
| **Architecture model** | | |
| SAM | ISO/IEC 14776-411:1999-09, *Information technology – Small Computer System Interface (SCSI) – Part 411: SCSI-3 Architecture Model (SAM)* | ANSI X3.270:1996 |
| SAM-2 | ISO/IEC 14776-412:(under development), *Information technology – Small Computer System Interface (SCSI) – Part 412: SCSI Architecture Model-2 (SAM-2)* | T10/1157 -D |
| SAM-3 | ISO/IEC 14776-413, (under development) *Information technology - Small Computer System Interface (SCSI) – Part 413: SCSI Architecture Model-3 (SAM-2)* | T10/1561 -D |
| **Common Access method** | | |
| CAM | ISO/IEC 9316-2:2000 06, *Information technology – Small computer system interface-2 (SCSI-2) – Part 2: Common Access Method (CAM) Transport and SCSI interface module (CAM)* | ANSI X3.232:1996 |

Copyright International Organization for Standardization
Provided by IHS under license with ISO
No reproduction or networking permitted without license from IHS Not for Resale

Copyright International Organization for Standardization
Provided by IHS under license with ISO
No reproduction or networking permitted without license from IHS
Not for Resale

INTERNATIONAL
ELECTROTECHNICAL
COMMISSION

3, rue de Varembé
P.O. Box 131
CH-1211 Geneva 20
Switzerland

Tel: + 41 22 919 02 11
Fax: + 41 22 919 03 00
info@iec.ch
www.iec.ch

Copyright International Organization for Standardization
Provided by IHS under license with ISO
No reproduction or networking permitted without license from IHS

Not for Resale