INTERNATIONAL STANDARD

ISO/IEC 14165-116

First edition
2005-08

Information technology –
Fibre channel –

Part 116:
10 Gigabit Fibre Channel (10GFC)



Reference number
ISO/IEC 14165-116:2005(E)

--`,,```,,,,````-`-`,,`,,`,`,,`---
Copyright International Organization for Standardization
Reproduced by IHS under license with ISO
No reproduction or networking permitted without license from IHS
Not for Resale

Copyright International Organization for Standardization
Reproduced by IHS under license with ISO
No reproduction or networking permitted without license from IHS
Not for Resale

INTERNATIONAL STANDARD

ISO/IEC 14165-116

First edition
2005-08

Information technology –
Fibre channel –

Part 116:
10 Gigabit Fibre Channel (10GFC)

© ISO/IEC 2005

All rights reserved. Unless otherwise specified, no part of this publication may be reproduced or utilized in any form or by any means, electronic or mechanical, including photocopying and microfilm, without permission in writing from the publisher.

ISO/IEC Copyright Office • Case postale 56 • CH-1211 Genève 20 • Switzerland



PRICE CODE W

For price, see current catalogue

Copyright International Organization for Standardization
Reproduced by IHS under license with ISO
No reproduction or networking permitted without license from IHS

Not for Resale

Copyright International Organization for Standardization
Reproduced by IHS under license with ISO
No reproduction or networking permitted without license from IHS
Not for Resale

Contents

FOREWORD - - - - - 9

INTRODUCTION - - - - - 10

1 Scope - - - - - 11

2 Normative references - - - - - 11

3 Definitions and conventions - - - - - 12
3.1 Definitions 12
3.2 Editorial Conventions 12
3.2.1 General 12
3.2.2 Hexadecimal notation 12
3.2.3 Transmission rate abbreviations 13
3.2.4 Acronyms and other abbreviations 14
3.2.5 Special symbols 15
3.3 Keywords 15
3.4 Notation 16
3.4.1 State diagram conventions 16

4 Structure and concepts - - - - - 19
4.1 Overview 19
4.2 10GFC structure 20
4.2.1 FC-3 general description 20
4.2.2 FC-2 general description 20
4.2.3 FC-1 general description 21
4.2.4 FC-0 general description 22

5 Functional characteristics - - - - - 23
5.1 General characteristics 23
5.2 10GFC physical variant nomenclature 23

6 Optical interface specification - - - - - 24
6.1 General 24
6.2 850 nm Parallel (4 lane) PMD, type 1200-MX-SN4P-I 24
6.2.1 Overview 24
6.2.2 PMD MDIO function mapping 24
6.2.3 PMD functional specifications 25
6.2.4 Operating ranges 27
6.2.5 PMD to MDI optical specifications for 1200-MX-SN4P-I 27
6.2.6 Optical measurement requirements 30
6.2.7 Environmental specifications 31
6.2.8 Environment 31
6.2.9 PMD labeling requirements 32
6.3 850 nm Serial PMD, type 1200-MX-SN-I 32
6.3.1 General 32
6.3.2 Optical specifications 32
6.3.3 Jitter, measurement and safety specifications 33
6.4 850 nm CWDM (four wavelength) PMD, type 1200-MX-SN4-I 34
6.4.1 Overview 34
6.4.2 Wavelength-division multiplexed-lane assignments 34
6.4.3 Operating ranges 34
6.4.4 Transmitter optical specifications 34
6.4.5 Receive optical specifications 34
6.4.6 Eye Safety 35

--`,,```,,,,````-`-`,,`,,`,`,,`---

Copyright International Organization for Standardization
Reproduced by IHS under license with ISO
No reproduction or networking permitted without license from IHS Not for Resale

6.5 1 310 nm Serial PMD, type 1200-SM-LL-L . . . 36
6.5.1 General . . . 36
6.5.2 Optical specifications . . . 36
6.5.3 Jitter, measurement and safety specifications . . . 36
6.6 1 310 nm CWDM (four wavelength) PMD, type 1200-X-LC4-L . . . 37
6.6.1 General . . . 37
6.6.2 Optical specifications . . . 37
6.6.3 Jitter, measurement and safety specifications . . . 37

7 Optical interface receptacle specification . . . 38
7.1 General . . . 38
7.2 Optical interface connector . . . 38
7.3 Optical receptacle . . . 38
7.4 Optical plug . . . 38

8 Optical interface cable plant specifications . . . 40
8.1 Overview . . . 40
8.2 Fibre optic cable plant model . . . 40
8.2.1 Optical fibre connection . . . 40
8.2.2 Medium dependent interface (MDI) . . . 40
8.3 Characteristics of the fiber optic cabling . . . 41
8.3.1 General . . . 41
8.3.2 Optical fiber and cable . . . 41
8.3.3 Cable plant optical return loss . . . 41
8.3.4 Connectors and splices . . . 41

9 newFC-1 and 10GFC Levels . . . 44
9.1 Definitions and nomenclature . . . 44
9.2 Overview . . . 44
9.3 Byte lane ordering . . . 44
9.4 XGMII control characters and ordered set translation . . . 46
9.4.1 General . . . 46
9.4.2 FC-1 to XGMII translation tables . . . 46
9.4.3 Unsupported FC-1 ordered sets . . . 47
9.4.4 Reserved codes . . . 48
9.4.5 10GFC error character . . . 48
9.5 XAUI idle characters . . . 48
9.6 Ordered set mapping from XGMII to XAUI interface . . . 49
9.7 10GFC Level functions . . . 49
9.7.1 General . . . 49
9.7.2 Ordered set translation . . . 50
9.7.3 Link fault signalling . . . 50
9.7.4 10GFC primitive sequence qualification state diagram . . . 50
9.7.5 XGMII and FC-1 primitive sequence interaction . . . 52
9.8 FC-1 level rules, requirements and functions . . . 52
9.8.1 General . . . 52
9.8.2 FC-1 link fault and error indications . . . 52
9.8.3 FC_Port state machine . . . 53
9.8.4 Arbitrated loop functions . . . 53
9.8.5 Inter-frame gap (IFG) rules . . . 53
9.8.6 XGMII primitive sequence ||Q|| rules . . . 54
9.8.7 XGMII primitive signal ||P|| rules . . . 55
9.8.8 EOF handling . . . 55
9.8.9 10GFC Errors (/E/) . . . 56

10 10 gigabit media independent interface (XGMII) . . . 57
10.1 General . . . 57

Copyright International Organization for Standardization
Reproduced by IHS under license with ISO
No reproduction or networking permitted without license from IHS
Not for Resale

10.2 Overview . . . 57
10.2.1 General . . . 57
10.2.2 XGMII characteristics . . . 57
10.2.3 Rate of operation . . . 57
10.2.4 Byte lane connections . . . 57
10.3 XGMII data stream . . . 58
10.3.1 General . . . 58
10.3.2 Inter-frame gap (IFG) . . . 58
10.3.3 Preamble and start of frame (SOF) . . . 59
10.3.4 Data frame size . . . 59
10.3.5 Data ||CRC|| . . . 59
10.3.6 End of frame ||EOF|| . . . 59
10.4 XGMII fault Indications . . . 59

11 XGMII extender sublayer (XGXS) and 10 gigabit attachment unit interface (XAUI) . . . 60
11.1 General . . . 60
11.2 XGXS and XAUI rate of operation . . . 60

12 8B/10B physical coding sublayer (PCS) and physical medium attachment (PMA) sublayers . . . 61
12.1 General . . . 61
12.2 Overview . . . 61
12.3 Rate of operation . . . 61
12.4 Ordered set mapping between XGMII and 8B/10B PCS . . . 61
12.4.1 General . . . 61
12.4.2 8B/10B encoding . . . 61
12.4.3 Data skew and multiple clock domain operation . . . 61
12.5 8B/10B PCS to XGMII mapping . . . 62
12.5.1 Reserved codes . . . 62
12.5.2 Invalid characters . . . 62
12.5.3 Terminate ||T|| . . . 62
12.5.4 Error /E/ . . . 63
12.6 Transmit and Receive state diagrams . . . 63

13 Physical coding sublayer (PCS) for 64B/66B . . . 65
13.1 General . . . 65
13.2 Single lane 64B/66B bit encoding . . . 65

14 10 gigabit sixteen bit interface (XSBI) . . . 66

15 Port management . . . 67

Annex A (informative) **Cable plant employing cross-connects . . . 68**
A.1 Characteristics of fiber optic cabling . . . 68

Annex B (normative) **10GFC to SONET mapping . . . 70**

Annex C (informative) **FC-AL-2 to 10GFC mapping . . . 71**
C.1 General . . . 71
C.2 Overview . . . 71
C.3 FC-AL-2 mapping . . . 71
C.3.1 General . . . 71
C.3.2 Unsupported FC-1 ordered sets . . . 71
C.4 Concerns about FC-AL-2 operation . . . 71
C.5 Forcing LPSM to Point-to-Point Mode . . . 72

Annex D (informative) **8B/10B PCS State Diagrams . . . 74**

--`,,```,,,,````-`-`,,`,,`,`,,`---
Copyright International Organization for Standardization
Reproduced by IHS under license with ISO
No reproduction or networking permitted without license from IHS
Not for Resale

D.1 General . . . 74
D.2 Overview . . . 74
D.3 Transmit source state diagram . . . 74
D.3.1 General . . . 74
D.3.2 Send data state . . . 74
D.3.3 Transmission errors . . . 75
D.3.4 Primitive signal ||P|| transmission . . . 75
D.3.5 Primitive sequence ||Q|| transmission . . . 75
D.3.6 Idle pattern ||I|| generation . . . 75
D.4 PCS receive state diagram . . . 76
D.4.1 General . . . 76
D.4.2 Reception Error . . . 76
D.4.3 Primitive sequence ||Q|| and primitive signal ||P|| reception . . . 77
D.4.4 Idle pattern reception . . . 80

Annex E (normative) **XAUI and 8B/10B PCS test patterns** . . . **81**
E.1 general . . . 81
E.2 High frequency test pattern . . . 81
E.3 Low frequency test pattern . . . 81
E.4 Mixed frequency test pattern . . . 81
E.5 Continuous jitter test pattern (CJPAT) . . . 81

BIBLIOGRAPHY . . . 84

--`,,```,,,,````-`-`,,`,,`,`,,`---

Copyright International Organization for Standardization
Reproduced by IHS under license with ISO
No reproduction or networking permitted without license from IHS

Not for Resale

Table 1 ISO and American Conventions 12
Table 2 Data rate abbreviations 13
Table 3 Acronyms and other abbreviations (Continued) 14
Table 4 Symbols 15
Table 5 State diagram operators 18
Table 6 1200-MX-SN4P-I PMD type and associated sublayer and clause 24
Table 7 SIGNAL_DETECT value definition 26
Table 8 Operating range for 1200-MX-SN4P-I over each optical fiber type 28
Table 9 Transmit characteristics for the 1200-MX-SN4P-I PMD 28
Table 10 Receive characteristics for the 1200-MX-SN4P-I PMD 29
Table 11 BERT mask specifications 29
Table 12 Applied Sinusoidal Jitter 30
Table 13 1200-MX-SN4-I PMD type and associated sublayer and clause 34
Table 14 Wavelength-division-multiplexed lane assignments 34
Table 15 Transmit characteristics 35
Table 16 1200-MX-SN4-I receive characteristics 35
Table 17 10GFC Cable Plant Variants 40
Table 18 Optical interface, cable plant and link budget (serial and parallel variants) 42
Table 19 Optical interface, cable plant and link budget (CWDM variants) 43
Table 20 XGMII control characters 46
Table 21 Frame delimiters 46
Table 22 Primitive signals (standard) 48
Table 23 XAUI idle characters 48
Table 24 XAUI frame layout 49
Table 25 Primitive sequence start 53
Table 26 Changing primitive sequence 54
Table 27 Ending primitive sequence 55
Table 28 Byte lane connections 58
Table 29 10GFC and 10GbE XAUI frame layout. 58
Table 30 XGMII to 8B/10B PCS mapping 62
Table 31 8B/10B PCS to XGMII mapping 63
Table 32 Ordered sets and special characters 64
Table A.1 Optical interface, cable plant and link budget (serial and parallel variants) 68
Table A.2 Optical interface, cable plant and link budget (CWDM variants) 69
Table C.1 Primitive signals (arbitrated loop) 72
Table C.2 Primitive sequences (arbitrated loop) 73
Table D.1 Idle pattern generation 76
Table D.2 Primitive signal transmission 77
Table D.3 Short inter-frame gap 78
Table D.4 8B/10B primitive sequence start 78
Table D.5 8B/10B continuing primitive sequence 79
Table D.6 8B/10B changing primitive sequence 79
Table D.7 8B/10B ending primitive sequence 80
Table D.8 Minimal frame idle pattern generation 80
Table E.1 Continuous jitter test pattern (CJPAT) frame format 83

Copyright International Organization for Standardization
Reproduced by IHS under license with ISO
No reproduction or networking permitted without license from IHS Not for Resale

Figure 1 State diagram notation example - - -

INFORMATION TECHNOLOGY – FIBRE CHANNEL – Part 116: 10 Gigabit Fibre Channel (10GFC)

FOREWORD

1) ISO (International Organization for Standardization) and IEC (International Electrotechnical Commission) form the specialized system for worldwide standardization. National bodies that are members of ISO or IEC participate in the development of International Standards through technical committees established by the respective organization to deal with particular fields of technical activity. ISO and IEC technical committees collaborate in fields of mutual interest. Other international organizations, governmental and non-governmental, in liaison with ISO and IEC, also take part in the work.

2) In the field of information technology, ISO and IEC have established a joint technical committee, ISO/IEC JTC 1. Draft International Standards adopted by the joint technical committee are circulated to national bodies for voting. Publication as an International Standard requires approval by at least 75 % of the national bodies casting a vote.

3) All users should ensure that they have the latest edition of this publication.

4) No liability shall attach to IEC or ISO or its directors, employees, servants or agents including individual experts and members of their technical committees and IEC or ISO member bodies for any personal injury, property damage or other damage of any nature whatsoever, whether direct or indirect, or for costs (including legal fees) and expenses arising out of the publication of, use of, or reliance upon, this ISO/IEC publication or any other IEC, ISO or ISO/IEC publications.

5) Attention is drawn to the normative references cited in this publication. Use of the referenced publications is indispensable for the correct application of this publication.

6) Attention is drawn to the possibility that some of the elements of this International Standard may be the subject of patent rights. ISO and IEC shall not be held responsible for identifying any or all such patent rights.

International Standard ISO/IEC 14165-116 was prepared by subcommittee 25: Interconnection of information technology equipment, of ISO/IEC joint technical committee 1: Information technology.

--`,,```,,,,````-`-`,,`,,`,`,,`---

Copyright International Organization for Standardization
Reproduced by IHS under license with ISO
No reproduction or networking permitted without license from IHS Not for Resale

INTRODUCTION

The Fibre Channel signalling and physical requirements described in this document cover

- link architecture including retiming (see clause 5)
- physical layer specifications(see clause 6)
- connector performance specifications (see clause 7)
- link and cable plant management specifications (see clause 8)
- FC-1 data path interface (see clause 9)
- optional interconnect interfaces (see clauses 10, 11 and 14)
- transmission coding (see clauses 12 and 13)
- management interface and register set (see clause 15).

Copyright International Organization for Standardization
Reproduced by IHS under license with ISO
No reproduction or networking permitted without license from IHS Not for Resale

INFORMATION TECHNOLOGY – FIBRE CHANNEL – Part 116: 10 Gigabit Fibre Channel (10GFC)

1 Scope

This part of ISO/IEC 14165 describes the signalling and physical requirements that may be utilized by Fibre Channel-2 (FC-2) level transport data at a rate in excess of 10 Gbit/s.

2 Normative references

The following referenced documents are indispensable for the application of this document. For dated references, only the edition cited applies. For undated references, the latest edition of the referenced document (including any amendments) applies.

IEC 60793-1-41, *Optical fibres – Part 1-41: Measurement methods and test procedures – Bandwidth*

IEC 60793-1-49, *Optical fibres – Part 1-49: Measurement methods and test procedures – Differential mode delay*

IEC 60793-2, *Optical fibres – Part 2: Product specifications – General*

IEC 60793-2-10, *Optical fibres – Part 2-10: Product specifications – Sectional specification for category A1 multimode fibres*

IEC 60825-1:1993, *Safety of laser products – Part 1: Equipment classification, requirements and user's guide, including Amendment 1 (1997) and Amendment 2 (2001)*

IEC 60950-1, *Information technology equipment – Safety – Part 1: General requirements*

IEC 61280-4-1, *Fibre-optic communication subsystem test procedures – Part 4-1: Cable plant and links – Multimode fibre-optic cable plant attenuation measurement*

IEC 61280-4-2, *Fibre-optic communication subsystem basic test procedures – Part 4-2: Fibre optic cable plant – Single-mode fibre optic cable plant attenuation*

IEC 61300-3-3, *Fibre optic interconnecting devices and passive components – Basic test and measurement procedures – Part 3-3: Examinations and measurements – Active monitoring of changes in attenuation and return loss*

IEC 61300-3-6, *Fibre optic interconnecting devices and passive components – Basic test and measurement procedures – Part 3-6: Examinations and measurements – Return loss*

IEC 61753-1-1, *Fibre optic interconnecting devices and passive components performance standard – Part 1-1: General and guidance – Interconnecting devices (connectors)*

IEC 61753-021-2, *Fibre optic interconnecting devices and passive component performance standard – Part 021-2: Fibre optic connectors terminated on single-mode fibre for category C – Controlled environment*

IEC 61753-022-2, *Fibre optic interconnecting devices and passive components performance standard – Part 022-2: Fibre optic connectors terminated on multimode fibre for category C – Controlled environmen*t

IEC 61754-7, *Fibre optic connector interfaces – Part 7: Type MPO connector family*

ISO/IEC 8802-3:2000, *Information technology – Telecommunications and information exchange between systems – Local and metropolitan area networks – Specific requirements – Part 3: Carrier sense multiple access with collision detection (CSMA/CD) access method and physical layer specifications (also referred to as 10GbE)*[1]

---

[1] Including forthcoming ISO/IEC 8802-3, Amendment 1, *Media Access Control (MAC) Parameters, Physical Layers and Management Parameters for 10 Gbit/s Operation*.

Copyright International Organization for Standardization
Reproduced by IHS under license with ISO
No reproduction or networking permitted without license from IHS Not for Resale

ITU-T Recommendation G.707, *Network node interface for the synchronous digital hierarchy (SDH).*

ITU-T Recommendation G.709, *Interfaces to the Optical Transport Network (OTN).*

3 Definitions and conventions

3.1 Definitions

For the purpose of this International Standard the following definiton applies:

3.1.1 compliance point

external connector for transmitters and receivers

3.2 Editorial conventions

3.2.1 General

In FC-PI, a number of conditions, mechanisms, sequences, parameters, events, states, or similar terms are printed with the first letter of each word in uppercase and the rest lowercase (e.g., Exchange, Class). Any lowercase uses of these words have the normal technical English meanings.

Numbered items do not represent any priority. Any priority is explicitly indicated.

The ISO convention of numbering is used (i.e., the thousands and higher multiples are separated by a space and a comma is used as the decimal point). A comparison of the American and ISO conventions is shown in table 1.

Table 1 – ISO and American conventions

ISO	American
0,6	0.6
1 000	1,000
1 323 462,9	1,323,462.9

In case of any conflict between figure, table and text, the text, then tables, and finally figures take precedence. Exceptions to this convention are indicated in the appropriate subclauses.

In all of the figures, tables, and text of this document, the most significant bit of a binary quantity is shown on the left side. Exceptions to this convention are indicated in the appropriate subclauses.

The term “shall” is used to indicate a mandatory rule. If such a rule is not followed, the results are unpredictable unless indicated otherwise.

If a field or a control bit in a frame is specified as not meaningful, the entity which receives the frame shall not check that field or control bit.

3.2.2 Hexadecimal notation

Hexadecimal notation is used to represent fields. For example, a four-byte Process_Associator field containing a binary value of 00000000 11111111 10011000 11111010 is shown in hexadecimal format as hex ‘00 FF 98 FA’.

3.2.3 Transmission rate abbreviations

The exact transmission rates are used in the tables and the abbreviated forms are used in text. Note that 3,187 5 gigabaud (GBd) is the preferred ISO method and is used instead of 3 187,5 megabaud (MBd) where it makes sense to do so.

Table 2 – Data rate abbreviations

Notation	Notation *(FC-FS style)*	True signalling rate
3,187 5 GBd	3 187,5 MBd	3 187,5 MBd

Copyright International Organization for Standardization
Reproduced by IHS under license with ISO
No reproduction or networking permitted without license from IHS Not for Resale

Table 2

Notation	Notation (FC-FS style)	True signalling rate
10,2 Gb/s	10 200 Mb/s	10 200 Mb/s
10,518 75 GBd	10 518,75 MBd	10 518,75 MBd
12,75 GBd	12 750 MBd	12 750 MBd

--`,,```,,,,````-`-`,,`,,`,`,,`---

Copyright International Organization for Standardization
Reproduced by IHS under license with ISO
No reproduction or networking permitted without license from IHS Not for Resale

3.2.4 Acronyms and other abbreviations

Table 3 – Acronyms and other abbreviations

ASIC	application specific integrated circuit
BB-2	Fibre Channel Backbone standard (FC-BB-2)
Bd	Baud
BER	bit error ratio
CDR	clock and data recovery
CJPAT	continuous jitter test pattern
CMOS	complementary metal oxide semiconductor
CRC	cyclic redundancy check
CWDM	coarse wavelength division multiplexing
dB	decibel
dBm	decibel (relative to 1 mW)
DJ	deterministic jitter
DUT	device under test
EIA	Electronic Industries Association
EMC	electromagnetic compatibility
EMI	electromagnetic interference
EOF	End-of-Frame
FC	Fibre Channel
FOTP	fiber optic test procedure
FWHM	full width half maximum
GbE	Gigabit Ethernet
Gb/s	gigabits per second, where gigabit = 10^9 bits
GB/s	gigabytes per second, where gigabyte = 10^9 bytes
GBd	gigabaud
GFC	Gigabit Fibre Channel
hex	hexadecimal notation
HIPPI	High-Performance Parallel Interface standard
IEEE	Institute of Electrical and Electronics Engineers
ISI	inter-symbol interference
ITU-T	The International Union Telecommunication standard (formerly CCITT)
JTPAT	jitter test pattern
LOS	loss of signal
LPSM	loop port state machine
LW	long wavelength
Mb/s	megabits per second, where megabit = 10^6 bits
MB	megabyte = 10^6 bytes
MB/s	megabytes per second, where megabyte = 10^6 bytes
MBd	megabaud
MDI	Medium Dependent Interface
MPN	mode partition noise
MPO	multiway plug optical connector
MM	multimode
MMF	multimode fiber
MT	multi vendor specific MPO connector designation
NA	not applicable
nm	nanometer
NEXT	near-end crosstalk
N_Port	Node_Port
OFSTP	optical fiber system test procedure
OFL	overfilled launch
OMA	optical modulation amplitude
ORL	optical return loss
OSI	Open Systems Interconnection
PCS	Physical Coding Sublayer
PLL	phase-locked loop
PMA	Physical Medium Attachment sublayer
PMD	Physical Medium Dependent sublayer
ppm	parts per million

Copyright International Organization for Standardization
Reproduced by IHS under license with ISO
No reproduction or networking permitted without license from IHS Not for Resale

Table 3 – Acronyms and other abbreviations (continued)

ps	picosecond
PSM	FC_Port State Machine
RF	remote fault
RFC-1	FC-1 Receiver
RFI	radio frequency interference
RIN	relative intensity noise
RJ	random jitter
RMS	root mean square
RS	Reconciliation Sublayer (10GbE: ISO/IEC 8802-3)
Rx	receiver
RXI	XGMII Receiver
SCSI	Small Computer System Interface standard
SD	signal detect
SDH	Synchronous Digital Hierarchy standard (ITU-T Rec G.707)
SerDes	serializer/deserializer
SM	single-mode
SMF	single-mode fiber
S/N or SNR	signal-to-noise ratio
SOF	Start-of-Frame
SW	short wavelength
TDR	time domain reflectometry
TFC-1	FC-1 Transmitter
TIA	Telecommunication Industries Association
Tx	transmitter
TXI	XGMII Transmitter
TxRx	a combination of transmitter and receiver
UI	unit interval = 1 bit period
ULP	upper level protocol
VI	Fibre Channel Virtual Interface standard
XAUI	10 Gigabit Attachment Unit Interface (see clause 11)
XGMII	10 Gigabit Media Independent Interface (see clause 10)
XGXS	XGMII Extender Sublayer (see clause 11)
XSBI	10 Gigabit Sixteen Bit Interface (see clause 14)

3.2.5 Special symbols

Unless indicated otherwise, the following symbols have the listed meanings.

Table 4 – Symbols

Symbol	Description
γ	gamma
Ω	ohm
μ	micro (e.g., μm = micrometer)
λ	wavelength
<n>	Bits and groups of bits are represented with angle brackets and a separating colon, such as <3> or <7:0>
/x/	The encoded character x is represented by preceding and following slash symbols.
‖y‖	Four encoded characters, one each in lanes 0 through 3 inclusive, synchronous to each other and arranged in a column identified by the value y, are represented by preceding and following double bar symbols.

3.3 Keywords

3.3.1 expected: Used to describe the behavior of the hardware or software in the design models assumed by this standard. Other hardware and software design models may also be implemented.

3.3.2 invalid: Used to describe an illegal or unsupported bit, byte, word, field or code value. Receipt of an invalid bit, byte, word, field or code value shall be reported as error.

Copyright International Organization for Standardization
Reproduced by IHS under license with ISO
No reproduction or networking permitted without license from IHS Not for Resale

3.3.3 ignored: Used to describe a bit, byte, word, field or code value that shall not be examined by the receiving port. The bit, byte, word, field or code value has no meaning in the specified context.

3.3.4 mandatory: A keyword indicating an item that is required to be implemented as defined in this standard.

3.3.5 may: A keyword that indicates flexibility of choice with no implied preference (equivalent to “may or may not”).

3.3.6 may not: A keyword that indicates flexibility of choice with no implied preference (equivalent to “may or may not”).

3.3.7 meaningful: A control field or bit shall be applicable and shall be interpreted by the receiver, wherever it is specified as meaningful. Wherever it is specified as “not meaningful”, it shall be ignored.

3.3.8 obsolete: A keyword indicating that an item was defined in a prior Fibre Channel standard but has been removed from this standard.

3.3.9 optional: A keyword that describes features that are not required to be implemented by this standard. However, if an optional feature defined by this standard is implemented, then it shall be implemented as defined in this standard.

3.3.10 reserved: A keyword referring to bits, bytes, words, fields and code values that are set aside for future standardization. A reserved bit, byte, word or field shall be set to zero, or in accordance with a future extension to this standard. Recipients are not required to check reserved bits, bytes, words or fields for zero values. Reserved code values shall always be passed to higher level protocols.

3.3.11 shall: A keyword indicating a mandatory requirement. Designers are required to implement all such mandatory requirements to ensure interoperability with other products that conform to this standard. This standard prescribes no specific response by a component if it receives information that violates a mandatory behavior.

3.3.12 should: A keyword indicating flexibility of choice with a strongly preferred alternative; equivalent to the phrase “it is strongly recommended”.

3.3.13 vendor specific: Functions, code values, and bits not defined by this standard and set aside for private usage between parties using this standard.

3.4 Notation

3.4.1 State diagram conventions

3.4.1.1 General

The operation of a protocol can be described by subdividing the protocol into a number of interrelated functions.The operation of the functions can be described by state diagrams. Each diagram represents the domain of a function and consists of a group of connected, mutually exclusive states. Only one state of a function is active at any given time (see figure 1).

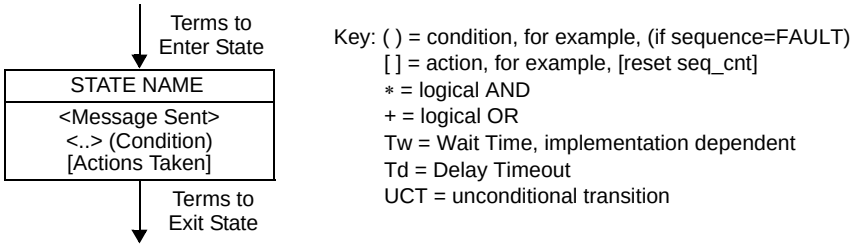

Figure 1 – State diagram notation example

Copyright International Organization for Standardization
Reproduced by IHS under license with ISO
No reproduction or networking permitted without license from IHS
Not for Resale

Each state that the function can assume is represented by a rectangle. These are divided into two parts by a horizontal line. In the upper part the state is identified by a name in capital letters. The lower part contains the name of any ON signal that is generated by the function. Actions are described by short phrases and enclosed in brackets.

All permissible transitions between the states of a function are represented graphically by arrows between them. A transition that is global in nature (for example, an exit condition from all states to the IDLE or RESET state) is indicated by an open arrow. Labels on transitions are qualifiers that must be fulfilled before the transition will be taken.The label UCT designates an unconditional transition. Qualifiers described by short phrases are enclosed in parentheses.

State transitions and sending and receiving of messages occur instantaneously. The actions inside a state block execute instantaneously. Actions inside state blocks are atomic (i.e.,uninterruptible). When a state is entered and after performing all the actions listed in a state block one time, the state block then continuously evaluates its exit conditions until one is satisfied, at which point control passes through a transition arrow to the next block. While the state awaits fulfillment of one of its exit conditions, the actions inside do not implicitly repeat.

Valid state actions may include .indicate and .request messages. No actions are taken outside of any state block.

Some devices described in this standard are allowed to have two or more ports. State diagrams that are capable of describing the operation of devices with an unspecified number of ports require qualifier notation that allows testing for conditions at multiple ports. The notation used is a term that includes a description in parentheses of which ports must meet the term for the qualifier to be satisfied (e.g., ANY and ALL). It is also necessary to provide for term-assignment statements that assign a name to a port that satisfies a qualifier. The following convention is used to describe a term-assignment statement that is associated with a transition:

– the character ":" (colon) is a delimiter used to denote that a term assignment statement follows;

– the character "⇐" (left arrow) denotes assignment of the value following the arrow to the term preceding the arrow.

The state diagrams contain the authoritative statement of the functions they depict. When apparent conflicts between descriptive text and state diagrams arise, the state diagrams are to take precedence. However, such precedence does not override any explicit description in the text that has no parallel in the state diagrams.

The models presented by state diagrams are intended as the primary specifications of the functions to be provided. However, it is important to distinguish between a model and a real implementation. The models are optimized for simplicity and clarity of presentation, while any realistic implementation may place heavier emphasis on efficiency and suitability to a particular implementation technology. It is the functional behavior of any unit that must match the standard, not its internal structure. The internal details of the model are useful only to the extent that they specify the external behavior clearly and precisely.

3.4.1.2 State diagram variables

Once set, variables retain their values as long as succeeding blocks contain no references to them.

Setting the parameter of a formal interface message assures that, on the next transmission of that message, the last parameter value set will be transmitted.

Testing the parameter of a formal interface messages tests the value of that message parameter that was received on the last transmission of said message. Message parameters may be assigned default values that persist until the first reception of the relevant message.

3.4.1.3 State transitions

The following terms are valid transition qualifiers:

a) Boolean expressions;

Copyright International Organization for Standardization
Reproduced by IHS under license with ISO
No reproduction or networking permitted without license from IHS Not for Resale

b) An event such as the expiration of a timer: timer_done;

c) An event such as the reception of a message: PMA_UNITDATA.indicate;

d) An unconditional transition: UCT;

e) A branch taken when other exit conditions are not satisfied: ELSE.

Any open arrow (an arrow with no source block) represents a global transition. Global transitions are evaluated continuously whenever any state is evaluating its exit conditions. When a global transition becomes true, it supersedes all other transitions, including UCT, returning control to the block pointed to by the open arrow.

3.4.1.4 Operators

The state machine operators are shown in table 5.

Table 5 – State diagram operators

Character	Meaning
*	Boolean AND
+	Boolean OR
∧	Boolean XOR
!	Boolean NOT
<	Less than
≤	Less than or equal to
=	Equals (a test of equality)
≠	Not equals
≥	Greater than or equal to
>	Greater than
( )	Indicates precedence
⇐	Assignment operator
∈	Indicates membership
∉	Indicates nonmembership
|	Catenate
ELSE	No other state condition is satisfied

Copyright International Organization for Standardization
Reproduced by IHS under license with ISO
No reproduction or networking permitted without license from IHS Not for Resale

4 Structure and concepts

4.1 Overview

This clause provides an overview of the structure, concepts and mechanisms used in 10GFC.

The Fibre Channel (FC) is logically a bi-directional point-to-point serial data channel, structured for high performance information transport. Physically, Fibre Channel is an interconnection of one or more point-to-point links. Each link end terminates in a Port. Ports are fully specified in FC-FS, FC-PI and FC-AL-2. Fiber is a general term used to cover all physical media supported by Fibre Channel including optical fiber, twisted pair, and coaxial cable.

Fibre Channel is structured as a set of hierarchical functions as illustrated in figure 2. Fibre Channel consists of related functions, FC-0 through FC-4. Each of these functions is described as a level. Fibre Channel does not restrict implementations to specific interfaces between these levels.

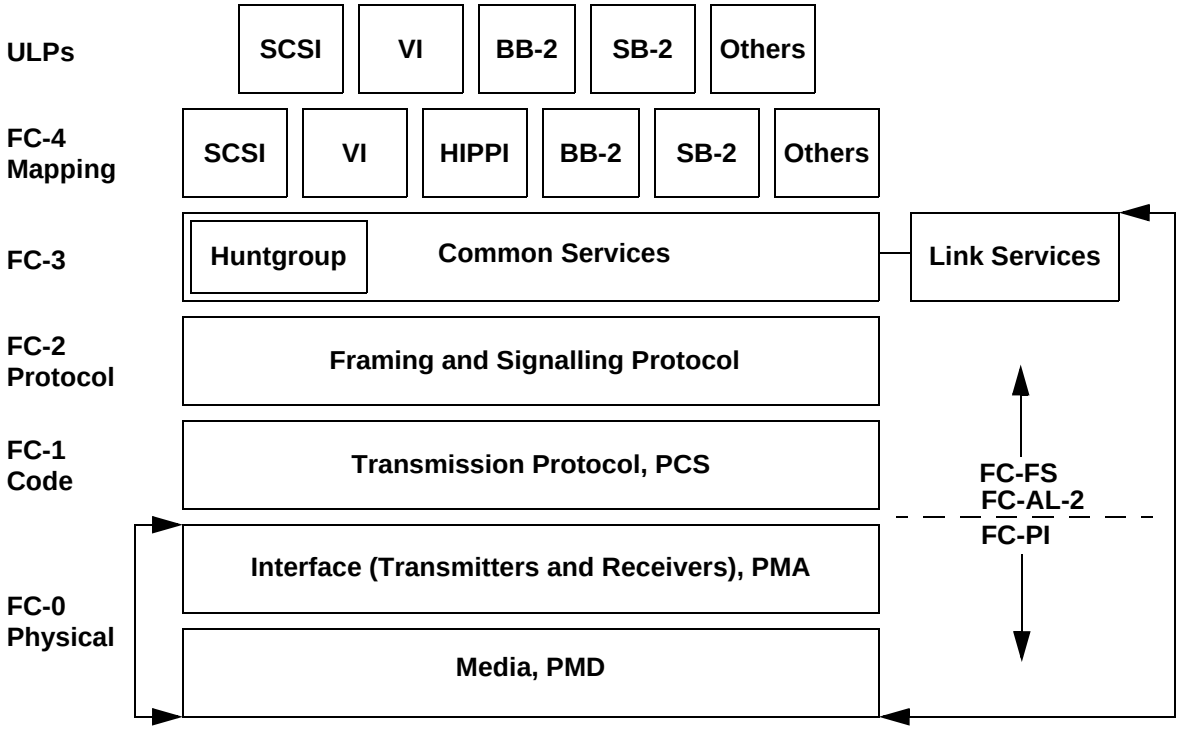

Figure 2 – Fibre channel structure

The Physical interface (FC-0), specified in FC-PI, consists of transmission media, transmitters, receivers and their interfaces. The Physical interface specifies a variety of media, and associated drivers and receivers capable of operating at various speeds.

The Transmission protocol (FC-1), Signalling protocol (FC-2) and Common Services (FC-3) are fully specified in FC-FS and FC-AL-2. Fibre Channel levels FC-1 through FC-3 specify the rules and provide mechanisms needed to transfer blocks of information end-to-end, traversing one or more links.

An Upper Level Protocol mapping to FC-FS constitutes an FC-4 which is the highest level in the Fibre Channel structure. FC-2 defines a suite of functions and facilities available for use by an FC-4.

10GFC describes the signalling and physical interface services that may be utilized by an extended version of the FC-2 level to transport data at a rate in excess of 10 gigabits per second over a family of FC-0 physical variants. 10GFC additionally introduces port management functions at the FC-3 level.

Copyright International Organization for Standardization
Reproduced by IHS under license with ISO
No reproduction or networking permitted without license from IHS
Not for Resale

A Fibre Channel Node is functionally configured as illustrated in figure 3. A Node may support one or more N_Ports and one or more FC-4s. Each N_Port contains FC-0, FC-1 and FC-2 functions. FC-3 optionally provides the common services to multiple N_Ports and FC-4s.

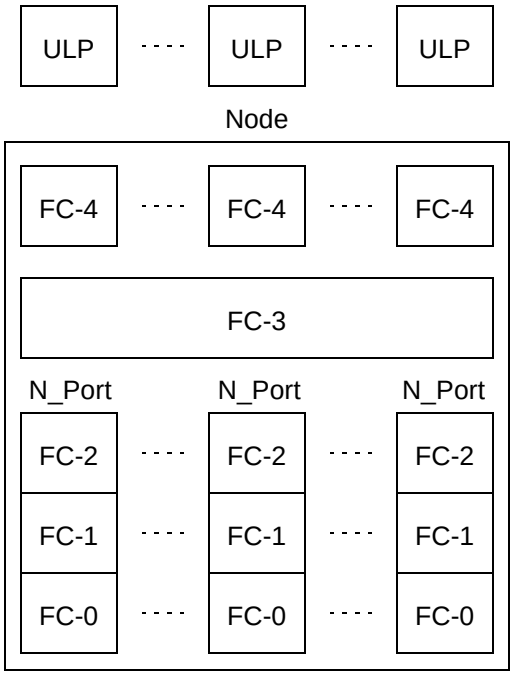

Figure 3 – Node functional configuration

4.2 10GFC structure

4.2.1 FC-3 general description

4.2.1.1 General

The FC-3 level of 10GFC extends the FC-3 levels of FC-FS and FC-AL-2 by adding a Port management interface and register set and low level signalling protocol.

4.2.1.2 Management interface and register set

The Port management interface and register set provides an interconnection between manageable devices within a Port and Port management entities. Port management is specified in clause 15.

4.2.2 FC-2 general description

The FC-2 level of 10GFC extends the FC-2 levels of FC-FS and FC-AL-2 to transport data at a rate of 10,2 gigabits per second over a family of 10GFC FC-0 physical variants.

Arbitrated loop functions defined in FC-AL-2 are not supported and outside the scope of this specification. Potential FC-AL-2 ordered set mapping, translations and related topics are provided in annex C for future reference.

--`,,```,,,,````-`-`,,`,,`,`,,`---
Copyright International Organization for Standardization
Reproduced by IHS under license with ISO
No reproduction or networking permitted without license from IHS
Not for Resale

4.2.3 FC-1 general description

4.2.3.1 General

The FC-1 level of 10GFC provides the ability to transport data at a rate of 10,2 Gb/s over a family of FC-0 physical variants. The FC-1 level adapts the Fibre Channel FC-2 level functions to the XGMII interface as defined in 10GbE: ISO/IEC 8802-3, and expanded in clause 10. The FC-1 level generates continuous data or control characters on the transmit path and expects continuous data or control characters on the receive path. The FC-1 level participates in link fault detection and reporting by monitoring the receive path for status reports that indicate an unreliable link, and generating status reports on the transmit path to report detected link faults to the FC-1 level on the remote end of the link.

10GFC provides the specification of optional physical interfaces applicable to the implementation of 10GFC Ports. In addition, the 10GFC FC-1 level specifies optional electrical interfaces which may be used to interconnect the physical embodiment of various sublayers. These interfaces include the 10 Gigabit Media Independent Interface (XGMII) and the 10 Gigabit Attachment Unit Interface (XAUI). One or both of these interfaces may typically be present within a 10GFC port. 10GFC provides the following FC-1 functions and interfaces.

4.2.3.2 Ordered sets

FC-1 signals convey FC-2 data as well as frame delimiters and control information to be encoded by FC-1 transmission code. The same conveyance exists in the reverse direction. 10GFC Ordered Sets are specified in clause 9.

4.2.3.3 10 Gigabit media independent interface (XGMII)

The 10 Gigabit Media Independent Interface provides a physical instantiation of a 10,2 Gb/s parallel data and control transport within FC-2. Its implementation is typically an internal chip interconnect or chip-to-chip interconnect. The XGMII supports 10,2 Gb/s data transport through its 32-bit wide data and four bit wide control transmit and receive paths.

Though the XGMII is an optional interface, it is used extensively in this standard as a basis for specification of the interface between FC-2 and FC-1. The FC-1 Physical Coding Sublayer (PCS) is specified to the XGMII interface, so if not implemented, a conforming implementation shall behave functionally as if the XGMII were implemented. The XGMII is specified in clause 10.

4.2.3.4 10 Gigabit attachment unit interface (XAUI)

The 10 Gigabit Attachment Unit Interface provides a physical instantiation of a 10,2 Gb/s four lane serial data and control transport within FC-2 or between FC-2 and lower levels including FC-1 and FC-0. The XAUI is an optional interface defined as an XGMII extender. Its implementation is typically a chip-to-chip interconnect including chips within transceiver modules. The XAUI supports 10,2 Gb/s data transport through its four 8B/10B based serial transmit and receive paths. The XAUI is specified in clause 11.

4.2.3.5 8B/10B transmission code

The 8B/10B transmission code is the same as that specified in FC-FS. It is intended for encoding data on four serial lanes at a cumulative data rate of 10,2 Gb/s. 8B/10B transmission code is utilized for both XAUI and four lane PMDs. For PMDs, the four transmitters and receivers may be either optically multiplexed to and from a single fiber optic cable or directly conveyed over four individual fibers. The 8B/10B transmission code as well as its corresponding Physical Coding Sublayer (PCS) and Physical Medium Attachment (PMA) sublayers are specified in clause 12.

--`,,```,,,,````-`-`,,`,,`,`,,`---

Copyright International Organization for Standardization
Reproduced by IHS under license with ISO
No reproduction or networking permitted without license from IHS Not for Resale

4.2.3.6 64B/66B transmission code

The 64B/66B transmission code is a PCS intended for 10,2 Gb/s data transport across a single fiber optic cable. The primary reason for the adoption of this code is to provide minimal overhead above the 10,2 Gb/s serial data rate to allow the use of optoelectronic components developed for other high volume 10 Gb/s communications applications such as SONET OC-192. A secondary reason for use of 64B/66B code (with scrambler) was to spread the spectrum of EMI radiation. The 64B/66B transmission code is specified in clause 13.

4.2.3.7 10 Gigabit sixteen bit interface (XSBI)

The 10 Gigabit Sixteen Bit Interface is a PMA that provides a physical instantiation of a 16-bit wide data path that conveys 64B/66B encoded data to and from FC-0. The XSBI is intended to support serial FC-0 variants. The XSBI is specified in clause 14.

4.2.4 FC-0 general description

4.2.4.1 General

The FC-0 level of 10GFC describes the Fibre Channel link. The FC-0 level covers a variety of media and associated transmitters and receivers capable of transporting FC-1 data. The FC-0 level is designed for maximum flexibility and allows the use of a large number of technologies to meet the broadest range of Fibre Channel system cost and performance requirements.

4.2.4.2 FC-0 interface overview

The nomenclature used by 10GFC to reference various combinations of components is defined in clause 5.

The link distance capabilities specified in 10GFC are based on ensuring interoperability across multiple vendors supplying the technologies (both transceivers and cable plants) under the tolerance limits specified in 10GFC. Greater link distances may be obtained by specifically engineering a link based on knowledge of the technology characteristics and the conditions under which the link is installed and operated. However, such link distance extensions are outside the scope of 10GFC.

4.2.4.3 Optical physical variants

Multiple optical serial physical full-duplex variants are specified to support the transport of encoded FC-1 data transport over fiber-optic medium. The variants include:

– four quarter speed lanes over individual fibers;

– four quarter speed lanes optically multiplexed over a single fiber, and;

– one full speed lane over one fiber.

The optical interfaces for all physical variants are specified in clause 6. Clause 7 contains the accompanying receptacle specifications. Clause 8 contains the accompanying cable plant specifications. Nomenclature for 10GFC physical variants is specified in 5.2.

Copyright International Organization for Standardization
Reproduced by IHS under license with ISO
No reproduction or networking permitted without license from IHS Not for Resale

5 Functional characteristics

5.1 General characteristics

FC-PI describes the physical link, the lowest level, in the Fibre Channel system. It is designed for flexibility and allows the use of several physical interconnect technologies to meet a wide variety of system application requirements. This 10GFC standard extends FC-PI with multiple physical variants specified to operate at a data rate of 1 200 MBytes/sec.

In the physical media signals a logical “1” shall be represented as the state with the higher optical power.

The FC-FS protocol is defined to operate across connections having a bit error rate (BER) detected at the receiving node of less than 10^{-12}. It is the combined responsibility of the component suppliers and the system integrator to ensure that this level of service is provided at every node in a given Fibre Channel installation. This 10GFC standard extends FC-FS with FC-3, FC-2 and FC-1 level specifications in support of multiple physical variants.

5.2 10GFC physical variant nomenclature

The nomenclature for the 10GFC physical variants, also referred to as Physical Medium Dependent (PMD) options, is specified in figure 4.

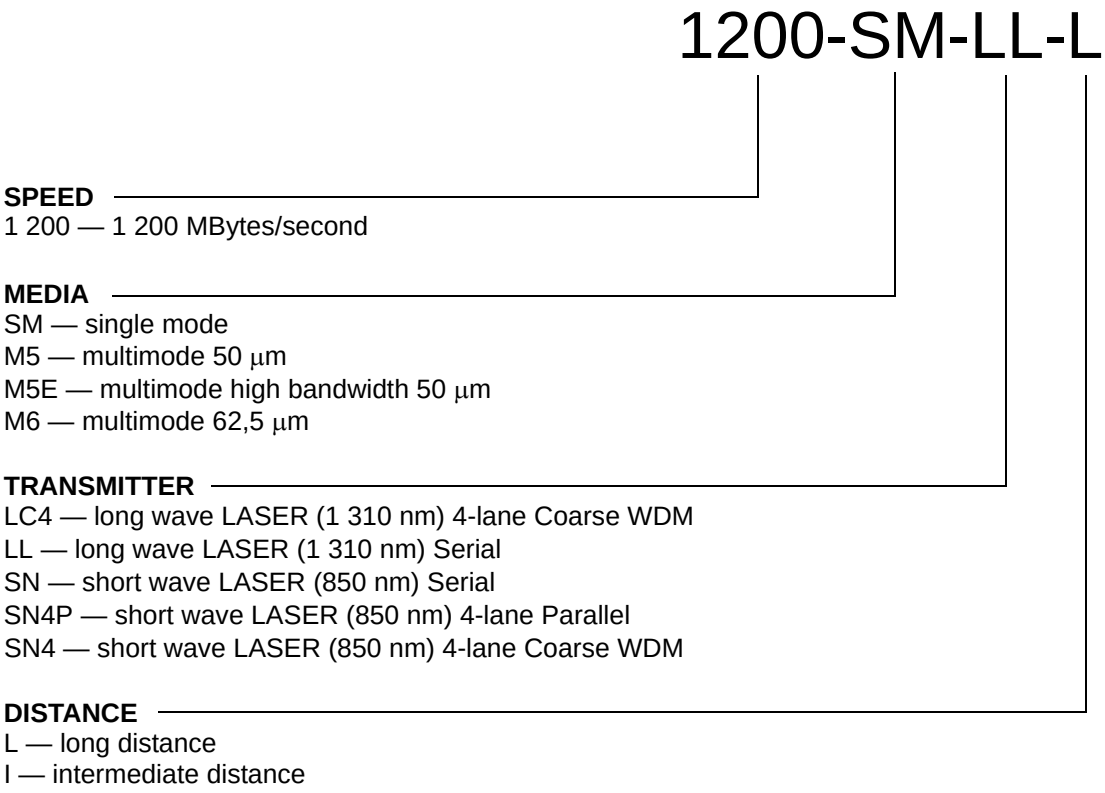

Figure 4 – 10GFC physical variant nomenclature

--`,,```,,,,````-`-`,,`,,`,`,,`---

Copyright International Organization for Standardization
Reproduced by IHS under license with ISO
No reproduction or networking permitted without license from IHS Not for Resale

6 Optical interface specification

6.1 General

This clause defines the optical signal characteristics at the interface connector receptacle. Each conforming optical FC attachment shall be compatible with this optical interface to allow interoperability within an FC environment. Fibre Channel links shall not exceed the BER objective (10^{-12}) under any valid condition. The parameters specified in this clause support meeting that requirement under any valid condition including the minimum input power level. Clause 7 specifies the corresponding interface receptacle. Clause 8 specifies the corresponding cable plant.

The following physical variants (PMDs) are included in this clause:

– 850 nm Parallel (four lane) PMD, type 1200-MX-SN4P-I, specified in this clause;

– 850 nm Serial PMD, type 1200-MX-SN-I, specified in 10GbE: ISO/IEC 8802-3;

– 850 nm CWDM (four wavelength) PMD, type 1200-MX-SN4-I, specified in this clause;

– 1 310 nm Serial PMD, type 1200-SM-LL-L, specified in 10GbE: ISO/IEC 8802-3;

– 1 310 nm CWDM (four wavelength) PMD, type 1200-X-LC4-L, specified in 10GbE: ISO/IEC 8802-3.

6.2 850 nm Parallel (4 lane) PMD, type 1200-MX-SN4P-I

6.2.1 Overview

This clause specifies the four-lane parallel-optic with denomination 1200-MX-SN4P-I PMD (including MDI) and the baseband medium for multimode optical fiber with data transfer rate of 1 200 MB/s. The PMD variants support three different media described by replacing X with “5” for standard 50 μm MMF (500 MHz•km), “5E” for high-bandwidth 50 μm MMF (2 000 MHz•km), and “6” for 62,5 μm MMF (200 MHz•km). Only 1200-M5-SN4P-I PMD specification is normative. The specifications for 1200-M5E-SN4P-I and 1200-M6-SN4P-I are informative. In order to form a complete physical layer, the PMD shall be integrated with the appropriate physical sublayers and management functions as specified in table 6.

Table 6 – 1200-MX-SN4P-I PMD type and associated sublayer and clause

Sublayer	Clause	1200-MX-SN4P-I
FC-1	9	Required
XGMII[1]	10	Optional
XGXS and XAUI	11	Optional
PCS/PMA	12	Required
Management	15	Optional

[1] The XGMII is an optional interface. However, if the XGMII is not implemented, a conforming implementation must behave functionally as though XGMII were present.

The services provided by the 1200-MX-SN4P-I PMD are specified in 10GbE: ISO/IEC 8802-3.

6.2.2 PMD MDIO function mapping

Specified in 10GbE: ISO/IEC 8802-3.

Copyright International Organization for Standardization
Reproduced by IHS under license with ISO
No reproduction or networking permitted without license from IHS Not for Resale

6.2.3 PMD functional specifications

The 1200-MX-SN4P-I PMDs perform the Transmit and Receive functions which convey data between the PMD service interface and the MDI plus various management functions if the optional MDIO is implemented.

6.2.3.1 PMD block diagram

The PMD block diagram is shown in figure 5. For purposes of system conformance, the PMD sublayer is standardized at the points described in this subclause. The optical transmit signal is defined at the output end of a reference patch cord (gammaT=TP2), between 0,5 m and 5 m in length, of a type consistent with the link type connected to the transmitter receptacle defined in 7.3. Unless specified otherwise, all transmitter measurements and tests defined in 6.2.6 are made at gammaT. The optical receive signal is defined at the output of the fiber optic cabling (gammaR=TP3) at the MDI (see 7.3). Unless specified otherwise, all receiver measurements and tests defined in 6.2.6 are made at gammaR.

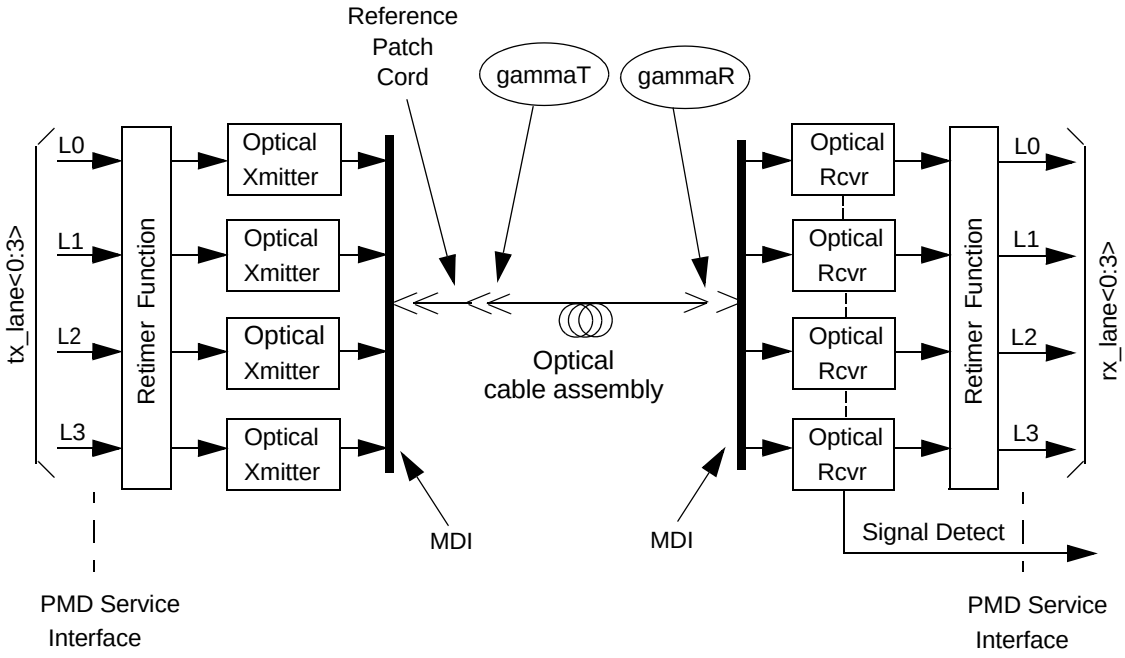

NOTE Specification of the retimer function is beyond the scope of this standard. However, a retimer may be required to ensure compliance at test points gammaT and gammaR.

Figure 5 – Block diagram for one direction of the 1200-MX-SN4P-I PMD signal paths

6.2.3.2 PMD transmit function

The PMD Transmit function shall convert the four electronic bit streams requested by the PMD service interface message PMD_UNITDATA.request (tx_bit<0:3>) into four separate optical signal streams for transmission over tx_lane<0:3>. The four optical signal streams shall then be delivered to the MDI, all according to the transmit optical specifications in this clause. The higher optical power level in each signal stream shall correspond to a tx_bit = ONE.

Copyright International Organization for Standardization
Reproduced by IHS under license with ISO
No reproduction or networking permitted without license from IHS Not for Resale

6.2.3.3 PMD receive function

When the PMD_loopback function is not enabled, the PMD Receive function shall convert the four optical signal streams into four electronic bit streams for delivery to the PMD service interface using the message PMD_UNITDATA.indicate (rx_bit<0:3>) received over rx_lane<0:3>, all according to the receive optical specifications in this clause. The higher optical power level in each signal stream shall correspond to a rx_bit = ONE.

When the MDIO PMD_loopback function is enabled, the PMD shall convey the bits received from the PMD_UNITDATA.request(tx_bit<0:3>) service primitive to the PMD service interface using the message PMD_UNITDATA.indicate(rx_bit<0:3>), where rx_bit<0:3> = tx_bit<0:3>.

6.2.3.4 Global PMD signal detect function

The Global PMD Signal detect function shall report the state of SIGNAL_DETECT via the PMD service interface. The SIGNAL_DETECT parameter is signaled continuously, while the PMD_SIGNAL.indicate message is generated when a change in the value of SIGNAL_DETECT occurs.

SIGNAL_DETECT shall be global indicator of the presence of optical signals on all four lanes generated according to the conditions defined in table 7. The PMD receiver is not required to verify whether a compliant 1200-MX-SN4P-I signal is being received. This standard imposes no response time requirements on the generation of the SIGNAL_DETECT parameter.

Table 7 – SIGNAL_DETECT value definition

Receive Conditions	**SIGNAL_DETECT OK Value**
For any lane; Input_optical_power ≤ -30 dBm average power	FAIL
For all lanes; [(Input_optical_modulation_amplitude ≥ -13 dBm) AND (compliant 1200-MX-SN4P-I signal input)]	OK
All other conditions	Unspecified

As an unavoidable consequence of the requirements for the setting of the SIGNAL_DETECT parameter, implementations must provide adequate margin between the input optical power level at which the SIGNAL_DETECT parameter is set to OK, and the inherent noise level of the PMD due to crosstalk, power supply noise, etc.

Various implementations of the SIGNAL_DETECT function are permitted by this standard, including implementations which generate the SIGNAL_DETECT parameter values in response to the amplitude of the modulation of the optical signal and implementations which respond to the average optical power of the modulated optical signal.

6.2.3.5 PMD lane by lane SIGNAL_DETECT function (optional)

The PMD lane by lane SIGNAL_DETECT function is optional. When the MDIO is implemented, each PMD_signal_detect_x value shall be set continuously in response to its associated lane, according to the requirements of table 7.

6.2.3.6 PMD reset function

If the MDIO interface is implemented, and if PMD_reset is asserted, the PMD shall be reset as defined in clause 15.

Copyright International Organization for Standardization
Reproduced by IHS under license with ISO
No reproduction or networking permitted without license from IHS Not for Resale

6.2.3.7 Global PMD transmit disable function (optional)

The Global_PMD_transmit_disable function is optional and allows all of the optical transmitters to be disabled. When a Global_PMD_transmit_disable variable is set to ONE, this function shall turn off all of the optical transmitters so that each transmitter meets the requirements of the Average Launch Power of the OFF Transmitter in table 9.

6.2.3.8 PMD lane by lane transmit disable function (optional)

The PMD_transmit_disable function is optional and allows the optical transmitters in each lane to be selectively disabled. When a PMD_transmit_disable_x variable is set to ONE, this function shall turn off the optical transmitter associated with that variable so that the transmitter meets the requirements of the Average Launch Power of the OFF Transmitter in table 9.

6.2.3.9 PMD local fault function

If the MDIO is implemented, and the PMD has detected a local fault on any of the transmit or receive paths, the PMD shall set PMD_local_fault to ONE.

If a PMD detects a fault on a transmit path, then the PMD shall turn off the optical transmitter in each lane and may set the Global_PMD_transmit_disable and each PMD_transmit_disable_x to ONE.

6.2.3.10 PMD transmit local fault function (optional)

The PMD_transmit_local_fault function is optional. The faults detected by this function are implementation specific.

If the MDIO is implemented, and the PMD has detected a local fault on a transmit path x, the PMD shall set the associated PMD_transmit_local_fault_x variable to ONE.

6.2.3.11 PMD receive local fault function (optional)

The PMD_receive_local_fault function is optional. The faults detected by this function are implementation specific.

If the MDIO is implemented, and the PMD has detected a local fault on a receive path x, the PMD shall set the associated PMD_receive_local_fault_x variable to ONE.

6.2.4 Operating ranges

The operating ranges for 1200-MX-SN4P-I PMDs are defined in table 8. Only 1200-M5-SN4P-I PMD specification is normative. The specifications for 1200-M5E-SN4P-I and 1200-M6-SN4P-I are informative. The specification for an 1200-MX-SN4P-I compliant transceiver supports all media types listed in table 8. A transceiver which exceeds the operational range requirement while meeting all other optical specifications is considered compliant.

6.2.5 PMD to MDI optical specifications for 1200-MX-SN4P-I

6.2.5.1 Transmitter optical specifications

The 1200-MX-SN4P-I transmitters shall meet the specifications defined in table 9 per measurement techniques defined in 6.2.6. Transmit jitter and eye mask specifications shall be met with all four lanes of the transmitter and all four lanes of the receiver carrying compliant 10GFC data.

Copyright International Organization for Standardization
Reproduced by IHS under license with ISO
No reproduction or networking permitted without license from IHS Not for Resale

Table 8 – Operating range for 1200-MX-SN4P-I over each optical fiber type

Fiber type and bandwidth[1]		Minimum range
62,5 μm MMF	200 MHz•km	0,5 to 75 m
50 μm MMF	500 MHz•km	0,5 to 150 m
50 μm MMF	2 000 MHz•km[2]	0,5 to 300 m

Notes:
1 Over-filled launch bandwidth per IEC 60793-1-41.

2 Effective modal bandwidth per with IEC 60793-2-10, Type A1a.2, detail specification for 850 nm laser optimized 50 μm MMF. Minimum fiber bandwidth under OFL conditions is 1 500 MHz•km. The 1200-M5E-SN4P-I PMD does not require compliance with restricted launch per IEC 60793-1-49 .

Table 9 – Transmit characteristics for the 1200-MX-SN4P-I PMD

Description	**1200-M5-SN4P-I 1200-M5E-SN4P-I 1200-M6-SN4P-I**	**Units**
Transmitter Type	Short-wave Laser	
Signalling speed per lane	3,187 5 ± 100 ppm	GBd
Center wavelength (range)	830 - 860	nm
RMS spectral width (max)	0,85	nm
Rise/Fall times[1] (max)	115	ps
Average Launch power (max)[2]	-2	dBm
Optical Modulation Amplitude (min)	-7	dBm
Average launch power of OFF transmitter (max)	-30	dBm
RIN_{12} (OMA)	-118	dB/Hz

Notes:
1 Unfiltered 20 % to 80 % rise/fall times.

2 Lesser of receiver maximum input average power and Acceptable Exposure Limit allowed by applicable laser safety classification as defined in 6.2.7.2.

6.2.5.2 Receive optical specifications

The 1200-MX-SN4P-I receiver shall meet the specifications defined in table 10 per measurement techniques defined in 6.2.6. Receiver sensitivity specifications are to be met with all four lanes of the transmitter and all four lanes of the receiver carrying compliant 10GFC data.

6.2.5.3 Transmit jitter specification

6.2.5.3.1 General

Transmit jitter specifications are as defined for 10GBASE-LX4 PMD in 10GbE: ISO/IEC 8802-3 with the following exceptions:

a) the BER mask is defined for 10^{-12}<BER<10^{-5};

b) the BERT mask specifications are defined in table 11.

Copyright International Organization for Standardization
Reproduced by IHS under license with ISO
No reproduction or networking permitted without license from IHS Not for Resale

Table 10 – Receive characteristics for the 1200-MX-SN4P-I PMD

Description	1200-M5-SN4P-I	1200-M5E-SN4P-I	1200-M6-SN4P-I	Unit
Nominal signalling speed per lane	3,187 5 ±100 ppm			GBd
Center wavelength range	830 - 860			nm
Average receive power (max)	-2			dBm
Return loss (min)	12			dB
Receive OMA (max)	-13			dBm
Stressed receive OMA[1]	-10,8	-11,1	-10,4	dBm
Vertical eye closure penalty[2]	2,2	1,9	2,6	dB
Horizontal eye closure[3]	14			ps
Receive -3 dB electrical upper cutoff frequency (max)	3 750			MHz

Notes:
1 Measured with test signal at gammaR for BER = 10^{-12} at the eye center.

2 Vertical eye closure penalty is a test condition for measuring stressed receive sensitivity. The sampling instant is defined to occur at the eye center. It is not a required characteristic of the receiver.

3 Horizontal eye closure (reduction of pulse width caused by the duty-cycle distortion component of deterministic jitter) is a test condition for measuring stressed receiver sensitivity. It is not a characteristic of the receiver.

c) Channel compliance specified in 6.2.5.3.2;

d) Test Patterns specified in 6.2.5.3.3.

Table 11 – BERT mask specifications

PMD	W (UI pk to pk)	σ (UI rms)
1200-MX-SN4P-I	0,3	0,015

6.2.5.3.2 Channel requirements for transmit jitter testing

The optical channel for 1200-MX-SN4P-I shall meet the requirements in table 9 for the case of a 0,5 m to 5 m reference patch cord.

6.2.5.3.3 GammaR Test pattern requirements for transmit jitter testing

Test patterns for 1200-MX-SN4P-I are specified in annex E.

6.2.5.4 Receive jitter tolerance specification

6.2.5.4.1 General

The jitter compliance methodology for the receiver is defined as for 10GBASE-LX4 in 10GbE: ISO/IEC 8802-3 with the following exceptions:

a) the BER mask is defined for 10^{-12}<BER<10^{-5};

b) the random jitter (RJ) component of the input signal shall have uniform spectral content over the measurement frequency range of 19 kHz to 1,5 GHz;

c) receiver input jitter mask parameters are given in table 11;

Copyright International Organization for Standardization
Reproduced by IHS under license with ISO
No reproduction or networking permitted without license from IHS Not for Resale

d) sinusoidal jitter specification is given in 6.2.5.4.2.

The test method for verification of the input jitter is defined by 10GBASE-SR “Stressed receiver conformance test” defined in 10GbE: ISO/IEC 8802-3.

6.2.5.4.2 Added sinusoidal jitter for receiver jitter test

The sinusoidal jitter used to test receiver jitter tolerance shall meet the requirements of table 12. Sinusoidal jitter shall be added to the test signal.

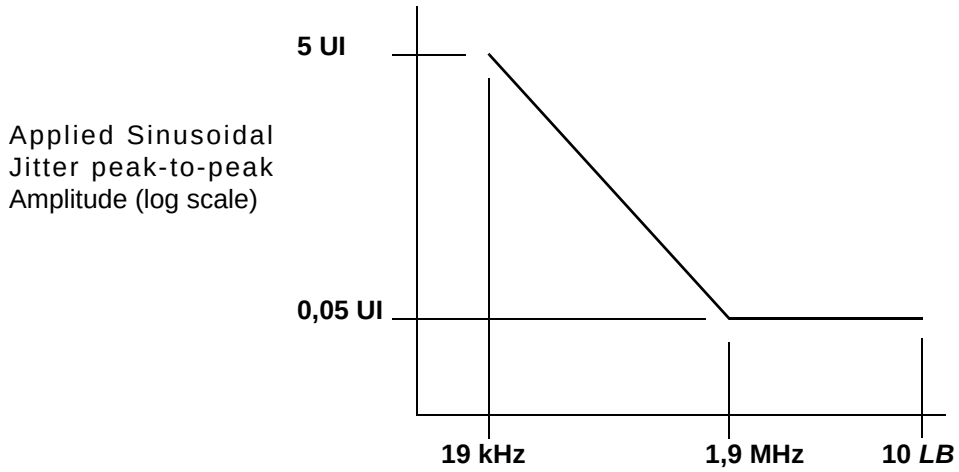

Figure 6 – Mask of the sinusoidal component of jitter tolerance (informative)

Table 12 – Applied Sinusoidal Jitter

Frequency range	Sinusoidal Amplitude Jitter (UI pk-to-pk)
f<19 kHz	NA
19 kHz<f<1,9 MHz	$\frac{95000}{f}$
1,9 MHz (3 187,5 Mbs/1 667) < f < 10 LB[1]	0,05

[1] LB = Loop Bandwidth. Upper frequency bound for 0,05 UI added sinusoidal jitter shall be at least 10 times loop bandwidth of the receiver being tested.

6.2.6 Optical measurement requirements

Optical measurement test procedures, filter requirements and equipment are defined as for 10GBASE-SR in 10GbE: ISO/IEC 8802-3. All testing is to be performed with a 10GFC compliant stimulus at 3,187 5 GBd per lane with all test and measurement timing requirements scaled accordingly. Specifically, the following exceptions apply:

a) all optical measurements shall be made through a short reference patch cable, between 0,5 m and 5 m in length;

b) all references to “test patterns” are referred to test patterns specified in 6.2.5.3.3. A pattern consisting of four to eleven consecutive ones followed by an equal run of consecutive zeros may be used as a square wave;

c) the transfer function of the fourth-order Bessel-Thomson filter shall be as defined for 10GBASE-LX4 in 10GbE: ISO/IEC 8802-3;

Copyright International Organization for Standardization
Reproduced by IHS under license with ISO
No reproduction or networking permitted without license from IHS Not for Resale

d) golden PLL shall have low-frequency corner of 1,9 MHz;

e) the transmitter jitter conformance test shall be performed with transversal filter with two equal amplitude paths with a differential delay of 100 ps;

f) the vertical eye closure and the duty-cycle distortion specification for the stressed receiver test are 2,2 dB and 14 ps, respectively. These parameters also given in table 10;

g) the upper -3 dB limit of the relative intensity noise measurement apparatus shall be approximately equal 3,125 GHz;

h) the BER mask for transmit jitter test procedure is defined between 10^{-12} and 10^{-5}.

6.2.7 Environmental specifications

6.2.7.1 General safety

All equipment meeting this standard shall conform to IEC 60950-1.

6.2.7.2 Laser safety

The 1200-MX-SN4P-I optical transceivers shall be certified to be in conformance with IEC 60825-1, including its Amendment 2 (2001-01).

IEC 60825-1, Class 1 laser safe operation is allowed for this PMD. The laser emission level of 1200-MX-SN4P-I optical transceivers shall not exceed the Acceptable Exposure Limit of IEC 60825-1, Class 1M laser under any condition of operation.

Conformance to additional laser safety standards may be required for operation within specific geographic regions.

Laser safety standards and regulations require that the manufacturer of a laser product provide information about the product's laser, safety features, labeling, use, maintenance and service. This documentation shall explicitly define requirements and usage restrictions on the host system necessary to meet these safety certifications.

NOTE A host system that fails to meet the manufacturer's requirements and/or usage restrictions may emit laser radiation in excess of the safety limits of one or more safety standards. In such a case, the host manufacturer is required to obtain its own laser safety certification.

6.2.7.3 Installation

It is recommended that proper installation practices, as defined by applicable local codes and regulation be followed in every instance in which such practices are applicable.

6.2.8 Environment

6.2.8.1 General

Normative specifications in this clause shall be met by a system integrating a 1200-MX-SN4P-I PMD over the life of the product while the product operates within the manufacturer's range of environmental, power, and other specifications.

It is recommended that manufacturers indicate in the literature associated with the PHY the operating environmental conditions to facilitate selection, installation, and maintenance.

Copyright International Organization for Standardization
Reproduced by IHS under license with ISO
No reproduction or networking permitted without license from IHS Not for Resale

It is recommended that manufacturers indicate, in the literature associated with the components of the optical link, the operating environmental conditions over which the specifications of this clause will be met.

6.2.8.2 Electromagnetic emission

A system integrating a 1200-MX-SN4P-I PMD shall comply with applicable local, national and international codes for the limitation of electromagnetic interference.

6.2.8.3 Temperature, humidity and handling

The optical link is expected to operate over a reasonable range of environmental conditions related to temperature, humidity, and physical handling (such as shock and vibration). Specific requirements and values for these parameters are considered to be beyond the scope of this International Standard.

6.2.9 PMD labeling requirements

It is recommended that each PHY (and supporting documentation) be labeled in a manner visible to the user with at least the following parameters, according to the PMD MDI type:

a) PMD MDI type 1200-MX-SN4P-I;

b) Applicable safety warnings.

Labeling requirements for Class 1M lasers are given in the laser safety standards referenced in 6.2.7.2.

6.3 850 nm Serial PMD, type 1200-MX-SN-I

6.3.1 General

This clause specifies the 850 nm serial optical physical variant with denomination 1200-MX-SN-I and the baseband medium for multimode optical fiber with data transfer rate of 1 200 MB/s. The 850 nm Serial specification for 10GFC is based on the 10GbE: ISO/IEC 8802-3 for 10GBASE-SR links.

6.3.2 Optical specifications

The optical specifications and link parameters for 850 nm Serial links are defined for 10GBASE-SR in 10GbE: ISO/IEC 8802-3. 10GFC shall use the same transmit and receive optical interface and budget specifications and measurements, with the following notes and exceptions:

a) the nominal signalling speed shall be set to 10,518 75 GBd $\pm$ 100 ppm;

b) the jitter and eye mask coordinates, expressed in unit intervals (UI) shall remain the same as in 10GbE: ISO/IEC 8802-3. In terms of absolute time, this imposes slightly more stringent requirements for both transmitters and receivers;

c) due to the slightly faster signalling rate, optical power penalties are slightly greater for 10GFC than for 10GbE: ISO/IEC 8802-3. However, 10GbE: ISO/IEC 8802-3 specifications include sufficient optical (unallocated) power margin to absorb the penalties such that the distance specifications in 10GbE: ISO/IEC 8802-3 can still be met for 10GFC;

d) additional insertion losses allowed for cable plant variations supported by this interface may show slightly different values than for 10GbE: ISO/IEC 8802-3 (see clause 8);

e) although the analysis tool used to develop many of the specifications suggests different vertical eye closure penalty and stressed receiver sensitivity OMA values for 10GFC, the differences in combination are minor, and the values documented in 10GbE: ISO/IEC 8802-3 shall apply;

Copyright International Organization for Standardization
Reproduced by IHS under license with ISO
No reproduction or networking permitted without license from IHS Not for Resale

f) the test cable for optical transmitter tests shall meet the requirements of clause 8 including minimum length of 0,5 m (the minimum length for 10GbE: ISO/IEC 8802-3 is 2 m).

6.3.3 Jitter, measurement and safety specifications

The specifications for 10GFC jitter, optical measurement techniques and safety are defined in 10GbE: ISO/IEC 8802-3. 10GFC shall use the test pattern defined for use with 10GBASE-SR links.

Copyright International Organization for Standardization
Reproduced by IHS under license with ISO
No reproduction or networking permitted without license from IHS Not for Resale

6.4 850 nm CWDM (four wavelength) PMD, type 1200-MX-SN4-I

6.4.1 Overview

This clause specifies the Coarse Wavelength Division Multiplexed (four wavelength) PMD with denomination 1200-MX-SN4-I PMD (including MDI) and the baseband medium for multimode optical fiber with data transfer rate of 1 200 MB/s. The PMD variants support three different media described by replacing X with “5” for standard 50 μm MMF (500 MHz•km), “5E” for high-bandwidth 50 μm MMF (2 000 MHz•km), and “6” for 62,5 μm MMF (200 MHz•km). In order to form a complete physical layer, the PMD shall be integrated with the appropriate physical sublayers and management functions as specified in table 13.

The 1200-MX-SN4-I PMD is functionally similar to the 1200-X-LC4-X PMD described in 6.6, which in turn is specified in 10GbE: ISO/IEC 8802-3. Functional similarity with 10GbE includes all PMD monitor and control functions, jitter specifications, test and measurements methods, etc. This clause will specify only deviations from 10GbE: ISO/IEC 8802-3.

Table 13 – 1200-MX-SN4-I PMD type and associated sublayer and clause

Sublayer	Clause	1200-MX-SN4-I
FC-1	9	Required
XGMII	10	Optional
XGXS and XAUI	11	Optional
PCS/PMA	12	Required
Management	15	Optional

6.4.2 Wavelength-division multiplexed-lane assignments

The wavelength ranges for each multiplexed lane of the 1200-M5-SN4-I PMD are defined in table 14.

Table 14 – Wavelength-division-multiplexed lane assignments

Lane	Wavelength range	PMD service interface transmit bit stream	PMD service interface receive bit stream
L_0	772,5 - 783,6 nm	tx_lane<0>	rx_lane<0>
L_1	795,2 - 806,5 nm	tx_lane<1>	rx_lane<1>
L_2	819,4 - 830,8 nm	tx_lane<2>	rx_lane<2>
L_3	845,0 - 856,6 nm	tx_lane<3>	rx_lane<3>

6.4.3 Operating ranges

The operating ranges for 1200-MX-SN4-I are specified in clause 8.

6.4.4 Transmitter optical specifications

The 1200-MX-SN4-I transmitter shall meet the specifications of table 15 per measurement techniques defined in 10GbE: ISO/IEC 8802-3.

6.4.5 Receive optical specifications

The 1200-M5-SN4-I receiver shall meet the specifications defined in table 16 per measurement techniques defined in 10GbE: ISO/IEC 8802-3. The sampling instant is defined to occur at the eye center.

Copyright International Organization for Standardization
Reproduced by IHS under license with ISO
No reproduction or networking permitted without license from IHS Not for Resale

Table 15 – Transmit characteristics

Description	62,5 μm MMF, 50 μm MMF	Units
Transmitter Type	Short-wave Laser	
Signalling speed per lane (nominal)	3,187 5 +/- 100 ppm	GBd
Lane wavelengths (range)	772,5 - 783,6 795,2 - 806,5 819,4 - 830,8 845,0 - 856,6	nm
Trise/Tfall (max. 20 % to 80 % response time)	110	ps
RMS spectral width (max.)	0,5	nm
Average launch power, four lanes (max.)	5,5	dBm
Average launch power, per lane (max.)	-0,50	dBm
Optical Modulation Amplitude (OMA), per lane (max.)	750 (-1,25)	μW (dBm)
Optical Modulation Amplitude (OMA), per lane (min.)	237 (-6,25)	μW (dBm)
Average launch power of OFF transmitter, per lane (max.)	-30	dBm
RIN_{12} (OMA)	-120	dB/Hz

Table 16 – 1200-MX-SN4-I receive characteristics

Description	62,5μm MMF (200 MHz•km)	50μm MMF (500 MHz•km)	50μm MMF (2 000 MHz•km)	Unit
Signalling speed per lane (nominal)	3,187 5 +/- 100 ppm			GBd
Lane wavelengths (range)	772,5 - 783,6 795,2 - 806,5 819,4 - 830,8 845,0 - 856,6			nm
Average receive power, four lanes (max)	5,5			dBm
Average receive power, per lane (max)	-0,5			dBm
Return loss (min)	12			dB
Receive sensitivity, per lane (OMA)	37,6 (-14,25)	37,6 (-14,25)	37,6 (-14,25)	μW (dBm)
Stressed receive sensitivity[1], per lane (OMA)	87,8 (-10,6)	88,1 (-10,5)	64,0 (-11,9)	μW (dBm)
Vertical eye closure penalty[2], per lane	3,6	3,7	2,3	dB
Receive electrical 3 dB upper cutoff frequency, per lane (max)	3 750			MHz

Notes:
1 Measured with conformance test signal at gammaR for BER = 10^{-12} at the eye center.

2 Vertical eye closure penalty is a test condition for measuring stressed receive sensitivity. It is not a required characteristic of the receiver.

6.4.6 Eye safety

The 1200-M5-SN4-I optical transceivers shall be certified to be in conformance with IEC 60825-1 and its Amendment 2 (2001-01).

IEC 60825-1, Class 1 laser safe operation is allowed for this PMD. The laser emission level of 1200-M5-SN4-I optical transceivers shall not exceed the Acceptable Exposure Limit of IEC 60825-1, Class 1M laser under any condition of operation.

Copyright International Organization for Standardization
Reproduced by IHS under license with ISO
No reproduction or networking permitted without license from IHS Not for Resale

Conformance to additional laser safety standards may be required for operation within specific geographic regions.

Laser safety standards and regulations require that the manufacturer of a laser product provide information about the product's laser, safety features, labeling, use, maintenance and service. This documentation shall explicitly define requirements and usage restrictions on the host system necessary to meet these safety certifications.

NOTE A host system that fails to meet the manufacturer's requirements and/or usage restrictions may emit laser radiation in excess of the safety limits of one or more safety standards. In such a case, the host manufacturer is required to obtain its own laser safety certification.

6.5 1 310 nm Serial PMD, type 1200-SM-LL-L

6.5.1 General

This clause specifies the 1 310 nm serial optical physical variant with denomination 1200-SM-LL-L and the baseband medium for single mode optical fiber with data transfer rate of 1 200 MB/s.The longwave specification for 10GFC is based on 10GbE: ISO/IEC 8802-3 optical specification for 10GBASE-LR links.

6.5.2 Optical specifications

The optical specifications and link parameters for 10GFC longwave links are defined for 10GBASE-LR in 10GbE: ISO/IEC 8802-3. 10GFC shall use the same transmit and receive optical interface and budget specifications and measurements, with the following notes and exceptions:

a) The nominal signalling speed shall be set to 10,518 75 GBd $\pm$ 100 ppm;

b) The jitter and eye mask coordinates, expressed in unit intervals (UI) shall remain the same as in ISO/IEC 8802-3. In terms of absolute time, this imposes slightly more stringent requirements for both transmitters and receivers;

c) Due to the slightly faster signalling rate, optical power penalties are slightly greater for 10GFC than for ISO/IEC 8802-3. However, 10GbE: ISO/IEC 8802-3 specifications include sufficient optical (unallocated) power margin to absorb the penalties such that the distance specifications in 10GbE: ISO/IEC 8802-3 can still be met for 10GFC;

d) Although the analysis tool used to develop many of the specifications suggests different vertical eye closure penalty and stressed receiver sensitivity OMA values for 10GFC, the differences in combination are minor, and the values documented in 10GbE: ISO/IEC 8802-3 shall apply.

6.5.3 Jitter, measurement and safety specifications

The specifications for 10GFC jitter, optical measurement techniques and safety are defined in 10GbE: ISO/IEC 8802-3. 10GFC will use the test pattern defined for use with 10GBASE-R links.

Copyright International Organization for Standardization
Reproduced by IHS under license with ISO
No reproduction or networking permitted without license from IHS Not for Resale

6.6 1 310 nm CWDM (four wavelength) PMD, type 1200-X-LC4-L

6.6.1 General

This clause specifies the 1 310 nm serial optical physical variant with denomination 1200-X-LC4-L and the baseband medium for single mode or multimode optical fiber with data transfer rate of 1 200 MB/s. The longwave specification for 10GFC is based on 10GbE: ISO/IEC 8802-3 optical specification for 10GBASE-LX4 links.

6.6.2 Optical specifications

The optical specifications and link parameters for 10GFC longwave links are defined for 10GBASE-LX4 in 10GbE: ISO/IEC 8802-3. 10GFC shall use the same transmit and receive optical interface and budget specifications and measurements, with the following notes and exceptions:

a) the nominal signalling speed shall be set to 3,187 5 GBd ± 100 ppm;

b) the jitter and eye mask coordinates, expressed in unit intervals (UI) shall remain the same as in 10GbE: ISO/IEC 8802-3. In terms of absolute time, this approach imposes slightly more stringent requirements for both transmitters and receivers;

c) due to the slightly faster signalling rate, optical power penalties are slightly greater for 10GFC than for 10GbE: ISO/IEC 8802-3. In the case of single-mode specifications, 10GbE: ISO/IEC 8802-3 specifications include sufficient optical (unallocated) power margin to absorb the penalties such that the distance specifications in 10GbE: ISO/IEC 8802-3 can still be met for 10GFC. However, for multimode specifications, the maximum specified distances for 10GFC are less than those for 10GbE: ISO/IEC 8802-3 by 10 m;

d) additional insertion losses allowed for cable plant variations supported by this interface may show slightly different values than for 10GbE: ISO/IEC 8802-3 (see clause 8);

e) although the analysis tool used to develop many of the specifications suggests different vertical eye closure penalty and stressed receiver sensitivity OMA values for 10GFC, the differences in combination are minor, and the values documented in 10GbE: ISO/IEC 8802-3 shall apply;

f) the test pattern for system level jitter compliance measurements shall be as documented in annex E;

6.6.3 Jitter, measurement and safety specifications

The specifications for 10GFC jitter, optical measurement techniques and safety are defined in 10GbE: ISO/IEC 8802-3. For 10GFC system testing that requires a long or mixed pattern, the test pattern defined in Annex E should be used; for component testing, test pattern(s) defined for 10GBASE-LX4 in 10GbE: ISO/IEC 8802-3 or in Annex E may be used as appropriate.

Copyright International Organization for Standardization
Reproduced by IHS under license with ISO
No reproduction or networking permitted without license from IHS Not for Resale

7 Optical interface receptacle specification

7.1 General

This clause defines the optical interface receptacle which constitutes the Port side of the optical interface connector assembly. The primary function of the optical interface connector is to align the optical transmission fiber mechanically to an optical port on a component such as a receiver or a transmitter. Clause 6 specifies the corresponding optical interface. Clause 8 specifies the corresponding cable plant.

Two receptacle types are included in this clause, one for single fiber per data direction optical interfaces, the other for four fiber per data direction optical interfaces. The following optical interfaces utilize a single fiber per data direction:

– 1 310 nm Serial. The optical interface receptacle is fully specified in FC-PI and FC-PI-2;

– 1 310 nm CWDM (four wavelength). The optical interface receptacle is fully specified in FC-PI and FC-PI-2;

– 850 nm Serial. The optical interface receptacle is fully specified in FC-PI and FC-PI-2;

– 850 nm CWDM (four wavelength). The optical interface receptacle is fully specified in FC-PI and FC-PI-2.

The following optical interfaces utilize four fibers per data direction:

– 850 nm Parallel (four lane TX and four lane Rx) Optics. The optical interface connector and receptacle are fully specified in this clause.

7.2 Optical interface connector

The parallel optical connector for the 850 nm four channel transmit and four channel receive transceiver is the MPO. This connector is fully specified in IEC 61754-7. The MPO is a multi-fiber connector based on proven MT ferrule technology. The optical alignment is provided by two high precision guide pins that are approximately 0,7 mm in diameter. The connector, as shown in figure 7, includes a push-pull coupling mechanism and the MT ferrule spring loaded in the direction of the optical axis. Connector interfaces are configured using a female plug without pin, a male plug which consists of two pins, and an adapter. The female plug mates with the male plug. Fiber and lane assignments are shown in figure 8.

7.3 Optical receptacle

The optical receptacle shall consist of a male plug conforming to IEC 61754-7-5, MPO Male Plug Connector Flat Interface-Push/Pull, and an adapter conforming to IEC 61754-7-3, MPO Adapter Interface-Push/Pull.

7.4 Optical plug

The optical plug shall consist of a female MPO plug conforming to IEC 61754-7-4, MPO Female Plug Connector Interface-Push/Pull.

--`,,```,,,,````-`-`,,`,,`,`,,`---

Copyright International Organization for Standardization
Reproduced by IHS under license with ISO
No reproduction or networking permitted without license from IHS Not for Resale

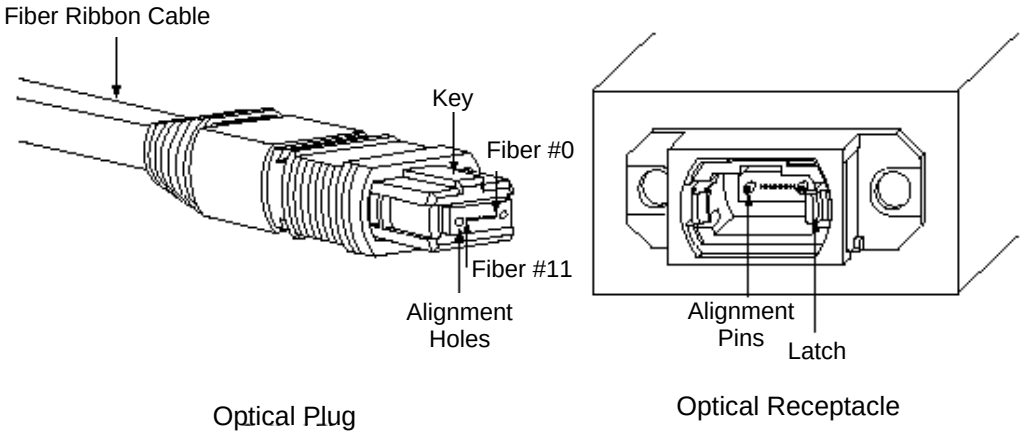

Figure 7 – MPO plug and receptacle

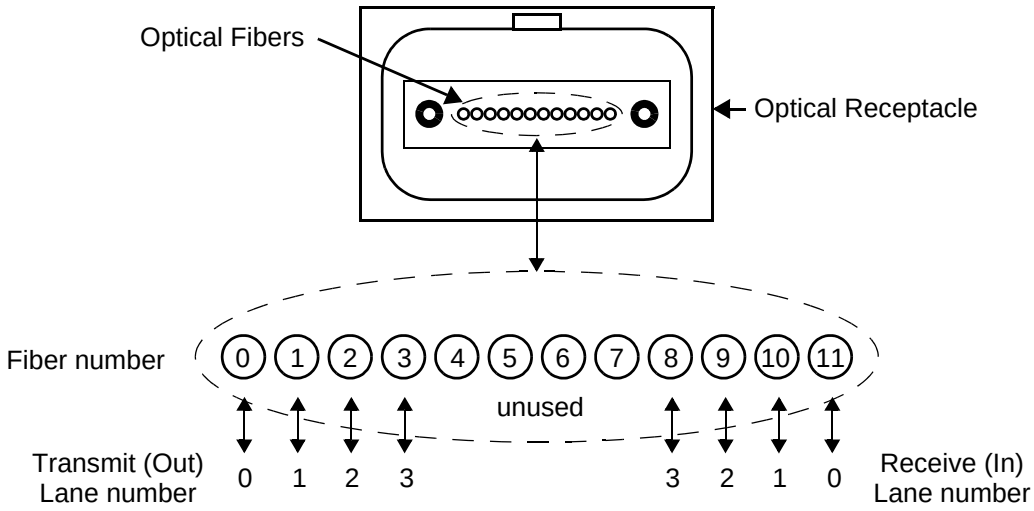

Figure 8 – MPO fiber lane numbering

--`,,```,,,,````-`-`,,`,,`,`,,`---

Copyright International Organization for Standardization
Reproduced by IHS under license with ISO
No reproduction or networking permitted without license from IHS
Not for Resale

8 Optical interface cable plant specifications

8.1 Overview

This clause specifies the physical variants and baseband media including both single mode and multimode optical fiber for the 10GFC physical interfaces shown in table 17 below.

Table 17 – 10GFC Cable Plant Variants

PMD	Description
Single Mode Variants	
1200-SM-LL-L	1 310 nm Serial
1200-SM-LC4-L	1 310 nm CWDM (four wavelength)
Multimode Variants	
1200-M5-SN-I	850 nm Serial, 50 µm
1200-M6-SN-I	850 nm Serial, 62,5 µm
1200-M5E-SN-I	850 nm Serial, High BW 50 µm
1200-M5-SN4P-I	850 nm Parallel (four lane), 50 µm
1200-M6-SN4P-I	850 nm Parallel (four lane), 62,5 µm
1200-M5E-SN4P-I	850 nm Parallel (four lane), High BW 50 µm
1200-M5-SN4-I	850 nm CWDM (four wavelength), 50 µm
1200-M6-SN4-I	850 nm CWDM (four wavelength), 62,5 µm
1200-M5E-SN4-I	850 nm CWDM (four wavelength), High BW 50 µm
1200-M6-LC4-L	1 310 nm CWDM (four wavelength) 62,5 µm
1200-M5-LC4-L	1 310 nm CWDM (four wavelength) 50 µm

8.2 Fiber optic cable plant model

The fiber optic cable plant model is shown in figure 9. A channel may contain additional connectors or other optical elements as long as the characteristics of the channel, such as attenuation, dispersion, reflections, polarization mode dispersion and modal bandwidth meet specifications. Insertion loss measurements of installed fiber cables are made in accordance with IEC 61280-4-1/Method B, IEC 61280-4-2/ Method A-1, IEC 61280, IEC 61280-4 and IEC 61280-4-1. The term channel is used here for consistency with generic cabling standards. See 8.3 for connectors and reference designs and distance. See annex A for alternate cable plant with greater than two connections.

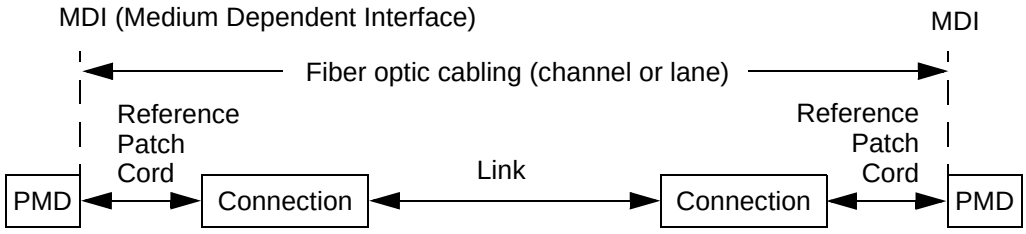

Figure 9 – Fiber optic cable plant model

8.2.1 Optical fiber connection

An optical fiber connection as shown in figure 9 consists of a pair of mated optical connectors. The PMD is coupled to the fiber optic cabling through a connector plug into the MDI optical receptacle.

8.2.2 Medium dependent interface (MDI)

The MDI is the interface between the PMD and the fiber optic cabling. Examples of an MDI include:

– connectorized fiber pigtail;

--`,,```,,,,````-`-`,,`,,`,`,,`---

Copyright International Organization for Standardization
Reproduced by IHS under license with ISO
No reproduction or networking permitted without license from IHS Not for Resale

– transceiver receptacle.

When the MDI is a remateable connection it shall meet the interface performance specifications of:

a) IEC 61753-1-1: Fibre optic interconnecting devices and passive component performance standard - Part 1-1: General and guidance -Interconnecting devices (connectors);

b) IEC 61753-021-2: Fibre optic passive components performance standard - Part 021-2: Fibre optic connectors terminated on single mode fibre for Category C - Controlled environment;

c) IEC 61753-022-2: Fibre optic passive components performance standard -Part 022-2:Fibre optic connectors terminated on multimode fibre for Category C - Controlled environment.

NOTE Compliance testing is performed at gammaT and gammaR, not at the MDI (see figure 5).

8.3 Characteristics of the fiber optic cabling

8.3.1 General

This subclause defines the optical interface cable plant for the signalling rates of 3,187 5 GBaud which corresponds to the four lane parallel or CWDM interfaces and 10,518 75 GBaud which corresponds to one lane serial optical interfaces. Clause 6 specifies the corresponding optical interface. Clause 7 specifies the corresponding interface receptacle. The operating ranges for serial and 4 lane parallel physical optical variants are specified in table 18. The operating ranges for the CWDM variants are specified in table 19.

The insertion loss is specified for a connection, which consists of a mated pair of optical connectors.

The maximum link distances for multimode fiber are calculated based on an allocation of 1,5 dB total connection and splice loss.

The maximum link distances for single mode fiber are calculated based on an allocation of 2,0 dB total connection and splice loss.

8.3.2 Optical fiber and cable

The optical fiber shall meet the requirements of IEC 60793-2; including Type A1a.1 (500 MHz•km**)**, A1a.2 (2000 MHz•km), and A1b (200 MHz•km) for multimode fibers and Type B1.1 (dispersion un-shifted single mode) fibers B1.3 (low water peak) fibers and Type B4 (non-zero dispersion shifted) fibers.

The loss budget for optical fiber cable shall be no greater than that specified in table 18**.** The limits include the losses of the fiber and other components in the link such as splices and connectors. The connectors at the ends of the links are included in the transmitter and receiver specifications and not in the cable plant limit. Due to the 2 % faster data rates for 10GFC, the link power penalties and other specifications may be slightly different than those specified in 10GbE: ISO/IEC 8802-3 for the Physical Media Dependent (PMD) interfaces. The values were derived using the methodologies employed in the 10 Gbit Ethernet Model.

8.3.3 Cable plant optical return loss

The cable plant optical return loss, with the receiver connected, shall be greater than or equal to 12 dB. This is required to keep the reflection penalty under control.

8.3.4 Connectors and splices

Multimode connectors and splices shall each have a return loss greater than 20 dB as measured by method 1 of IEC 61300-3-6, IEC 61300-3-3 or their equivalents.

--`,,```,,,,````-`-`,,`,,`,`,,`---

Copyright International Organization for Standardization
Reproduced by IHS under license with ISO
No reproduction or networking permitted without license from IHS Not for Resale

Table 18 – Optical interface, cable plant and link budget (serial and parallel variants)

Description	1200-M5-SN-I	1200-M5E-SN-I	1200-M6-SN-I	1200-M5-SN4P-I	1200-M5E-SN4P-I	1200-M6-SN4P-I	1200-SM-LL-L
Subclause	6.3			6.2			6.5
Nominal operating wavelength (nm)	850						1 310
Signalling rate (Gbd)	10,518 75			3,187 5			10,518 75
Modal bandwidth (MHz•km)[1]	500[2]	2000[3,4]	200[2]	500[2]	2000[3,4]	200[2]	N/A
Operating range (m)	0,5-82	0,5-300	0,5-33	0,5-150	0,5-300	0,5-75	2 - 10 000
Channel insertion loss (dB)[7]	1,8	2,6	1,6	2,0	2,6	1,8	6,0
Allocation for penalties[5]	5,1	4,7	4,9	3,6	3,4	4,1	3,4
Additional insertion loss allowed[6]	0,4	0,0	0,8	0,4	0,0	0,1	0,0

Notes:

1 Some users may want to install higher modal bandwidth fiber to facilitate future use of the cable plant for higher bit rate applications. For shorter distances, a lower bandwidth may be substituted provided the performance requirements are met.

2 Minimum modal bandwidth at 850 nm using an overfilled launch (OFL) per IEC 60793-1-41.

3 Minimum effective modal bandwidth at 850 nm per IEC 60793-1-49.

4 See transmitter specifications in clause 6 for encircled flux requirements.

5 Link penalties are used for link budget calculations. They are not requirements and are not meant to be tested. A wavelength of 840 nm is used to calculate link penalties and additional insertion loss for serial PMDs with a nominal operating wavelength of 850 nm. A wavelength of 830 nm is used to calculate link penalties and additional insertion loss for parallel PMDs with a nominal operating wavelength of 850 nm. A wavelength of 1 260 nm is used to calculate link penalties and additional insertion loss for serial PMDs with a nominal operating wavelength of 1 310 nm.

6 This parameter is informational only and not required for 10GFC systems. The additional allowable insertion loss may be combined with the channel insertion loss to meet measured channel insertion loss but not to increase operating distance. Additional allowable insertion loss may be used to overcome insertion loss higher than the Channel insertion loss value and in some cases may be less than the value shown.

7 At nominal operating wavelength.

Single mode connectors and splices shall each have a return loss greater than 26 dB as measured by method 1 of IEC 61300-3-6, IEC 61300-3-3 or their equivalents.

Connectors and splices are allowed inside the cable plant as long as the resulting loss conforms to the optical budget of this standard. The number and quality of the connections represent a design trade-off outside the scope of this document.

Copyright International Organization for Standardization
Reproduced by IHS under license with ISO
No reproduction or networking permitted without license from IHS Not for Resale

Table 19 – Optical interface, cable plant and link budget (CWDM variants)

PMD	1200-M5-SN4-I	1200-M5E-SN4-I	1200-M6-SN4-I	1200-M5-LC4-L	1200-M6-LC4-L	1200-SM-LC4-L
Subclause	6.4			6.6		
Nominal operating wavelength (nm)	850			1 300		1 310
Signalling rate (Gbd)	3,187 5					
Modal bandwidth (MHz•km)[1]	500[2]	1500[3,4]	200[2]	500[2]	500[2]	N/A
Operating range (m)	0,5-290	0,5-550	0,5-118	0,5-290	0,5-290	2 - 10 000
Channel insertion loss (dB)[7]	2,5	3,4	1,9	1,9	1,9	6,0
Allocation for penalties[5]	5,2	3,7	5,1	5,6	5,1	2,0
Additional insertion loss allowed[6]	0,0	0,3	0,8	0,0	0,5	0,0

Notes:

1 Some users may want to install higher modal bandwidth fiber to facilitate future use of the cable plant for higher bit rate applications. For shorter distances, a lower bandwidth may be substituted provided the performance requirements are met.

2 Minimum modal bandwidth at 850 nm using an overfilled launch (OFL) per IEC 60793-1-41.

3 Minimum effective modal bandwidth at 850 nm per IEC 60793-1-49.

4 See transmitter specifications in clause 6 for encircled flux requirements.

5 Link penalties are used for link budget calculations. They are not requirements and are not meant to be tested. A wavelength of 772,5 nm is used to calculate link penalties and additional insertion loss for CWDM PMDs with a nominal operating wavelength of 850 nm. A wavelength of 1269 nm is used to calculate link penalties and additional insertion loss for CWDM PMDs with a nominal operating wavelength of 1 310 nm.

6 This parameter is informational only and not required for 10GFC systems. The additional allowable insertion loss may be combined with the channel insertion loss to meet measured channel insertion loss but not to increase operating distance. Additional allowable insertion loss may be used to overcome insertion loss higher than the Channel insertion loss value and in some cases may be less than the value shown.

7 At nominal operating wavelength.

--`,,```,,,,````-`-`,,`,,`,`,,`---

Copyright International Organization for Standardization
Reproduced by IHS under license with ISO
No reproduction or networking permitted without license from IHS Not for Resale

9 newFC-1 and 10GFC Levels

9.1 Definitions and nomenclature

Control and data on the 10GFC interface are described in terms of characters and Ordered Sets (a group of four characters). Characters may be encoded or unencoded. Characters are encoded as described in FC-FS.

Unencoded 8B/10B characters consist of 8 data bits of data and one control bit. The character is represented using the algorithm described in FC-FS. The letter K is assigned when the control bit is “one” and the letter D is assigned when the control bit is “zero”. Lower case k and d are used to indicate hexadecimal unencoded characters such as the illegal special character used as XGMII Idle (k07).

Encoded 8B/10B characters consist of 10 bits of information. Encoded characters are designated by a leading and trailing slash, such as /S/ or /K27.7/ as specified in 3.2.5.

Unencoded Ordered Sets are represented as a string of characters, such as K27.7 - D21.5 - D23.0 - D23.0.

Encoded Ordered Sets are designated with multiple slashes, such as /K27.7/D21.5/D23.0/D23.0/ or /SOFc1/.

Four control characters in a word (a column or Ordered Set) is represented by preceding and following double bar symbols as specified in 3.2.5. For example (||A||).

9.2 Overview

This clause defines the logical characteristics of the 10GFC level and minor changes to the FC-1 level defined in FC-FS. The 10GFC level adapts the Fibre Channel FC-1 functions to the XGMII interface as defined in 10GbE: ISO/IEC 8802-3, and expanded in clause 10. The 10GFC level translation, mapping and qualification is similar to portions of the Reconciliation Sublayer (RS) defined in 10GbE: ISO/IEC 8802-3. The XGMII Extender Sublayer (XGXS) and 10 Gigabit Attachment Unit Interface (XAUI) is defined in clause 11. Figure 10 shows the relationship of the ISO/IEC (IEEE) OSI reference model to the 10GbE Layers and 10GFC Levels.

9.3 Byte lane ordering

Characters are ordered in terms of lanes. The 10GFC interface consists of four lanes numbered from 0 to 3. Lane 0 is the first lane used when all lanes are used as a group. Lane 0 is the first lane transmitted on a single wire.

Fibre Channel bytes are grouped into 32-bit words in big endian order. In order to maintain the same order on the wire as FC-FS, the 10GFC layer between the Fibre Channel FC-1 level and XGMII maps FC-1 Byte 0 or bits <31:24> to 10GbE Lane 0 bits <7:0>, FC-1 Byte 1 or bits <23:16> to 10GbE Lane 1 bits <15:8>, FC-1 Byte 3 or bits <15:8> to 10GbE Lane 2 bits <23:16>, and FC-1 Byte 3 or bits <7:0> to 10GbE Lane 3 bits <31:24> as in figure 11 and table 28. The lowest numbered bit of each Fibre Channel byte maps to the lowest numbered bit of the respective XGMII byte.

The first byte of a frame is assembled on Lane 0, the second on Lane 1, and so on, with the byte stream wrapping from Lane 3 to Lane 0 again. This order is continued until all bytes in the frame are sent.

Primitive Signals except for EOF and Primitive Sequences are aligned with the control character on Lane 0 and the remaining data characters (Bytes 1, 2, and 3) on Lane 1, 2, and 3 in that order. EOF has the control character on lane 3.

Copyright International Organization for Standardization
Reproduced by IHS under license with ISO
No reproduction or networking permitted without license from IHS Not for Resale

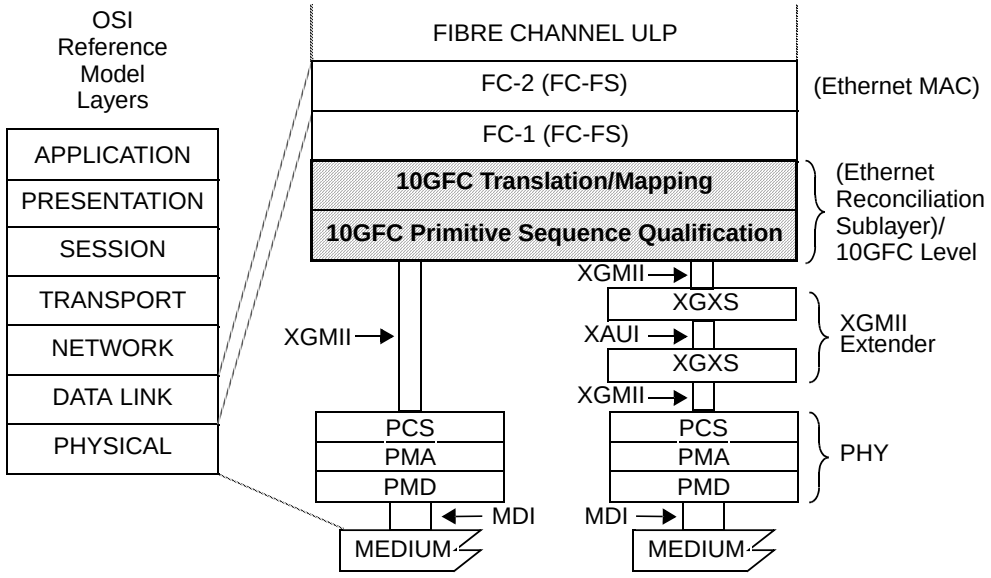

MAC = MEDIA ACCESS CONTROL
MDI = MEDIUM DEPENDENT INTERFACE
PCS = PHYSICAL CODING SUBLAYER
PHY = PHYSICAL LAYER DEVICE
PMA = PHYSICAL MEDIUM ATTACHMENT
PMD = PHYSICAL MEDIUM DEPENDENT
XAUI = 10 GIGABIT ATTACHMENT UNIT INTERFACE
XGMII = 10 GIGABIT MEDIA INDEPENDENT INTERFACE
XGXS = XGMII EXTENDER SUBLAYER

Figure 10 – XGMII relationship to OSI, 10GbE and 10GFC

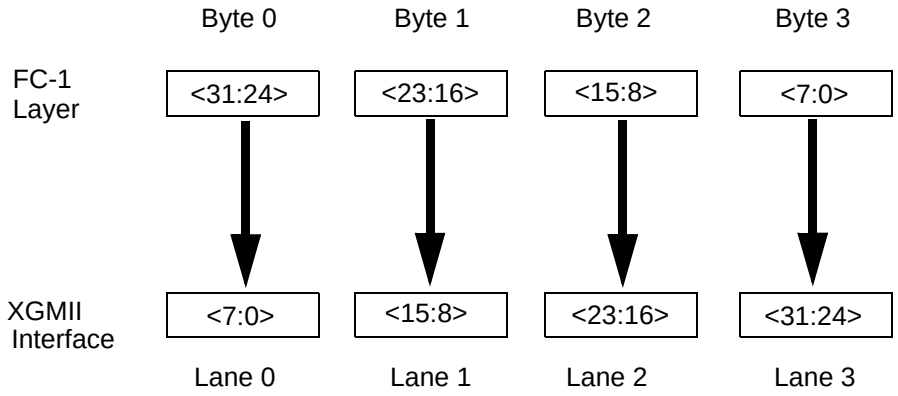

Figure 11 – Byte lane ordering

--`,,```,,,,````-`-`,,`,,`,`,,`---
Copyright International Organization for Standardization
Reproduced by IHS under license with ISO
No reproduction or networking permitted without license from IHS
Not for Resale

9.4 XGMII control characters and ordered set translation

9.4.1 General

10GFC defines control characters in addition to K28.5 which are used to further define Ordered Sets such as Fibre Channel Frame Delimiters, Primitive Signals, and Primitive Sequences. The 10GFC XGMII control characters are listed in table 20.

Table 20 – XGMII control characters

Abbr.	Delimiter Function	Character
S	Start - Start of Frame	K27.7
T	Terminate - End of Frame	K29.7
P	Primitive Signal	K28.2
Q	Primitive Sequence	K28.4
E	Error	K30.7
I	Idle	k07

The Error character shall be substituted for an illegal character or when a disparity error is detected within the 8B/10B PCS. The Idle character is transmitted on all lanes of XGMII when no other type of information is available. The use of S, T, P, and Q is further defined in tables 21 through 24 using the rules defined in 9.8.

9.4.2 FC-1 to XGMII translation tables

Tables 21 through 24 specify the Ordered Sets (composed of control and data characters) which are defined for use by XGMII and the translated value used by the FC-1 level. The FC-1 translated value is listed as the FC-FS value. The values labeled 10GFC are the values used on the XGMII interface. The names of the 10GFC Ordered Sets are appended with a "_X" suffix to differentiate the coding from FC-FS. All ordered sets other than those listed in this section are reserved and shall be passed through the 10GFC level without modification. FC-AL-2 codes are reserved and are described in annex C for possible future use.

Table 21 – Frame delimiters

Abbr.	Delimiter Function	Interface (disparity)	Ordered Set Lane 0-1-2-3
SOFc1 SOFc1_X	SOF Connect Class 1	FC-FS	K28.5 - D21.5 - D23.0 - D23.0
		10GFC	K27.7 - D21.5 - D23.0 - D23.0
SOFi1 SOFi1_X	SOF Initiate Class 1	FC-FS	K28.5 - D21.5 - D23.2 - D23.2
		10GFC	K27.7 - D21.5 - D23.2 - D23.2
SOFn1 SOFn1_X	SOF Normal Class 1	FC-FS	K28.5 - D21.5 - D23.1 - D23.1
		10GFC	K27.7 - D21.5 - D23.1 - D23.1
SOFi2 SOFi2_X	SOF Initiate Class 2	FC-FS	K28.5 - D21.5 - D21.2 - D21.2
		10GFC	K27.7 - D21.5 - D21.2 - D21.2
SOFn2 SOFn2_X	SOF Normal Class 2	FC-FS	K28.5 - D21.5 - D21.1 - D21.1
		10GFC	K27.7 - D21.5 - D21.1 - D21.1
SOFi3 SOFi3_X	SOF Initiate Class 3	FC-FS	K28.5 - D21.5 - D22.2 - D22.2
		10GFC	K27.7 - D21.5 - D22.2 - D22.2
SOFn3 SOFn3_X	SOF Normal Class 3	FC-FS	K28.5 - D21.5 - D22.1 - D22.1
		10GFC	K27.7 - D21.5 - D22.1 - D22.1

Copyright International Organization for Standardization
Reproduced by IHS under license with ISO
No reproduction or networking permitted without license from IHS Not for Resale

Table 21 – Frame delimiters (Continued)

Abbr.	Delimiter Function	Interface (disparity)	Ordered Set Lane 0-1-2-3
SOFc4 SOFc4_X	SOF Activate Class 4	FC-FS	K28.5 - D21.5 - D25.0 - D25.0
		10GFC	K27.7 - D21.5 - D25.0 - D25.0
SOFi4 SOFi4_X	SOF Initiate Class 4	FC-FS	K28.5 - D21.5 - D25.2 - D25.2
		10GFC	K27.7 - D21.5 - D25.2 - D25.2
SOFn4 SOFn4_X	SOF Normal Class 4	FC-FS	K28.5 - D21.5 - D25.1 - D25.1
		10GFC	K27.7 - D21.5 - D25.1 - D25.1
SOFf SOFf_X	SOF Fabric	FC-FS	K28.5 - D21.5 - D24.2 - D24.2
		10GFC	K27.7 - D21.5 - D24.2 - D24.2
EOFt EOFt_X	EOF Terminate	FC-FS(-)	K28.5 - D21.4 - D21.3 - D21.3
		FC-FS(+)	K28.5 - D21.5 - D21.3 - D21.3
		10GFC	D21.4 - D21.3 - D21.3 - K29.7
EOFdt EOFdt_X	EOF Disconnect-Terminate-Class 1 EOF Deactivate-Terminate-Class 4	FC-FS(-)	K28.5 - D21.4 - D21.4 - D21.4
		FC-FS(+)	K28.5 - D21.5 - D21.4 - D21.4
		10GFC	D21.4 - D21.4 - D21.4 - K29.7
EOFa EOFa_X	EOF Abort	FC-FS(-) FC-FS(+)	K28.5 - D21.4 - D21.7 - D21.7
			K28.5 - D21.5 - D21.7 - D21.7
		10GFC	D21.4 - D21.7 - D21.7 - K29.7
EOFn EOFn_X	EOF Normal	FC-FS(-) FC-FS(+)	K28.5 - D21.4 - D21.6 - D21.6 K28.5 - D21.5 - D21.6 - D21.6
		10GFC	D21.4 - D21.6 - D21.6 - K29.7
EOFni EOFni_X	EOF Normal-Invalid	FC-FS(-) FC-FS(+)	K28.5 - D10.4 - D21.6 - D21.6 K28.5 - D10.5 - D21.6 - D21.6
		10GFC	D10.4 - D21.6 - D21.6 - K29.7
EOFdti EOFdti_X	EOF Disconnect-Terminate-Invalid Class 1 EOF Disconnect-Deactivate-Invalid Class 4	FC-FS(-) FC-FS(+)	K28.5 - D10.4 - D21.4 - D21.4 K28.5 - D10.5 - D21.4 - D21.4
		10GFC	D10.4 - D21.4 - D21.4 - K29.7
EOFrt EOFrt_X	EOF Remove-Terminate Class 4	FC-FS(-) FC-FS(+)	K28.5 - D21.4 - D25.4 - D25.4 K28.5 - D21.5 - D25.4 - D25.4
		10GFC	D21.4 - D25.4 - D25.4 - K29.7
EOFrti EOFrti_X	EOF Remove-Terminate Invalid Class 4	FC-FS(-) FC-FS(+)	K28.5 - D10.4 - D25.4 - D25.4 K28.5 - D10.5 - D25.4 - D25.4
		10GFC	D10.4 - D25.4 - D25.4 - K29.7

9.4.3 Unsupported FC-1 ordered sets

10GFC does not support NOS. NOS does not appear on XGMII or XAUI and is mapped by the 10GFC translation block to Remote Fault (RF).

--`,,```,,,,````-`-`,,`,,`,`,,`---

Copyright International Organization for Standardization
Reproduced by IHS under license with ISO
No reproduction or networking permitted without license from IHS Not for Resale

Table 22 – Primitive signals (standard)

Abbr.	Delimiter Function	Interface	Ordered Set Lane 0-1-2-3
IDLE	Idle	FC-FS	K28.5 - D21.4 - D21.5 - D21.5
		10GFC	k07 - k07 - k07 - k07
R_RDY R_RDY_X	Receiver_Ready	FC-FS	K28.5 - D21.4 - D10.2 - D10.2
		10GFC	K28.2 - D21.4 - D10.2 - D10.2
VC_RDY VC_RDY_X	Virtual Circuit Ready	FC-FS	K28.5 - D21.7 - VC_ID - VC_ID
		10GFC	K28.2 - D21.7 - VC_ID - VC_ID
BB_SCs BB_SCs_X	Buffer-to-buffer State Change (SOF)	FC-FS	K28.5 - D21.4 - D22.4 - D22.4
		10GFC	K28.2 - D21.4 - D22.4 - D22.4
BB_SCr BB_SCr_X	Buffer-to-buffer State Change (R_RDY)	FC-FS	K28.5 - D21.4 - D22.6 - D22.6
		10GFC	K28.2 - D21.4 - D22.6 - D22.6
SYNx SYNx_X	Clock Synchronization Word X	FC-FS	K28.5 - D31.3 - CS_X - CS_X
		10GFC	K28.2 - D31.3 - CS_X - CS_X
SYNy SYNy_X	Clock Synchronization Word Y	FC-FS	K28.5 - D31.3 - CS_Y - CS_Y
		10GFC	K28.2 - D31.3 - CS_Y - CS_Y
SYNz SYNz_X	Clock Synchronization Word Z	FC-FS	K28.5 - D31.3 - CS_Z - CS_Z
		10GFC	K28.2 - D31.3 - CS_Z - CS_Z

9.4.4 Reserved codes

The following codes are reserved for future use and shall be passed through all devices: K28.1, K28.6 and K23.7. All ordered sets beginning with K28.2 and K28.4 are considered primitive signals and sequences and those not listed in this document are reserved. All reserved Primitive Signals or Sequences are passed though devices at the 10GFC level and below.

NOTE K28.7 is not supported by 64B/66B devices and generates an unaligned 8B/10B comma-character when two are adjacent. 64B/66B devices pass through the reserved codes if they are part of a stream of control characters but not if they are mixed with data characters.

9.4.5 10GFC error character

Errors may result in the error code /E/ or other valid or invalid characters appearing in any lane of the XGMII receive data bus (also see 9.8.9). These errors are passed unaltered to FC-1.

9.5 XAUI idle characters

XAUI characters are encoded using the 8B/10B encoding scheme described in FC-FS. 10GFC uses both positive and negative disparity control characters while FC-FS specifies some control characters using only negative disparity. Additional special characters specified in table 23 are defined for Idle generation and clock frequency mismatch management.

Table 23 – XAUI idle characters

Abbr	Description	Code Value
A	Align - Lane deskew via code group alignment	K28.3
K	Sync - Synchronization and End of Packet padding	K28.5
R	Skip - Clock tolerance compensation	K28.0

--`,,```,,,,````-`-`,,`,,`,`,,`---

Copyright International Organization for Standardization
Reproduced by IHS under license with ISO
No reproduction or networking permitted without license from IHS Not for Resale

9.6 Ordered set mapping from XGMII to XAUI interface

Using the control characters defined in the previous subclauses, a general frame layout may be illustrated with an inter frame Idle sequence as depicted in table 24.

Table 24 – XAUI frame layout

Lane 0	/A/	/R/	/K/	***/S/***	/d_h/	...	/d/	...	/d/	/d_c/	/dt/	/A/	/R/	/K/
Lane 1	/A/	/R/	/K/	/ds/	/d_h/	...	/d/	...	/d/	/d_c/	/dt/	/A/	/R/	/K/
Lane 2	/A/	/R/	/K/	/ds/	/d_h/	...	/d/	...	/d/	/d_c/	/dt/	/A/	/R/	/K/
Lane 3	/A/	/R/	/K/	/ds/	/d_h/	...	/d/	...	/d/	/d_c/	***/T/***	/A/	/R/	/K/

Table Key:
- /S/ds/ds/ds/ - SOF delimiter
- /d_h/ - Frame header data
- /d/ - Frame payload data
- /d_c/d_c/d_c/d_c/ - Frame CRC
- /dt/dt/dt/T/- EOF delimiter
- ARK sequence is representative of randomized inter-frame idles

In addition to frames, Primitive Signals and Primitive Sequences may be sent across XAUI in the Idle sequence. Primitive Signals are encoded and transmitted as is. Examples are outlined in clause 12. Upon reception they will be decoded and passed to XGMII as is.

Primitive Sequences follow a set of rules for transmission which are outlined in clause 12. When received, they are passed to the XGMII as is. 10GFC level performs Primitive translation and Primitive Sequence qualification.

Upon detection of a link fault, a Local Fault Primitive Sequence will be forwarded to the 10GFC on the XGMII receive bus. Upon recognition of a Local Fault Primitive Sequence, the 10GFC will send the Remote Fault Primitive Sequence on the XGMII transmit bus until Local Fault ends (see 9.7.3).

The Idle Sequence on XAUI translates the k07 characters on XGMII to /A/, /K/, or /R/ special characters and transmits these according to the rules outlined in the 10GbE: ISO/IEC 8802-3 spec (see clause 12 and annex D).

9.7 10GFC Level functions

9.7.1 General

The 10GFC level qualifies Primitive Sequences, establishes a valid connection and translates and decodes ordered sets to FC-1 level values. An FC-1 implementation can optionally handle the 10GFC primitives and link fault signalling directly without any translation.

This 10GFC level is intended to present the same information to the FC-1 independent of the media device used. For instance, a direct connection between XGMII and a 64B/66B PCS device to another 64B/66B PCS device to XGMII will provide identical Primitive Sequence streams on both sides. FC-1 to 10GFC to XGMII interaction is depicted in figure 12.

The XGMII RXI data, Primitive Signals and Sequences are translated and qualified by the 10GFC level then provided on the RFC-1 interface to the FC-1 level. Primitive Sequences are qualified by a method similar to those described in FC-FS but over a larger number of characters. 10GFC qualified Primitive Sequences operate with standard FC-1 functions. Fibre Channel data and primitives are passed from the FC-1 level on the TFC-1 interface through the 10GFC translation block to the TXI interface of XGMII.

Copyright International Organization for Standardization
Reproduced by IHS under license with ISO
No reproduction or networking permitted without license from IHS Not for Resale

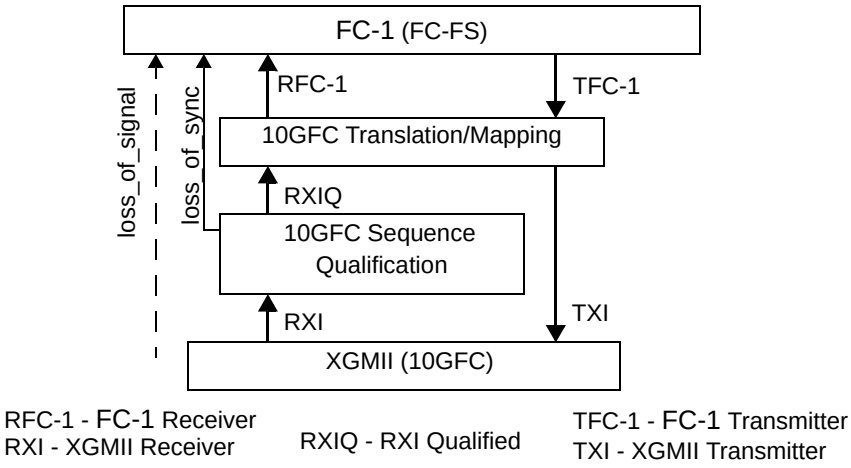

Figure 12 – FC-1/10GFC/XGMII Interaction

9.7.2 Ordered set translation

10GFC ordered sets are translated from those defined in FC-FS to those used by XGMII as detailed in 9.4.

9.7.3 Link fault signalling

The link fault signalling required by 10GbE: ISO/IEC 8802-3 shall be satisfied before those of FC-FS. The 10GFC level translates XGMII ||LF|| and ||RF|| primitives defined in 10GbE: ISO/IEC 8802-3, such that no changes are required in the Fibre Channel Port State Machine (PSM) as specified in FC-FS.

When a local fault is detected, Remote Fault (RF) is transmitted until either RF or OLS is received and qualified. When RF is received and qualified, OLS is transmitted.

In the XGMII receive path, loss_of_sync (an out of band signal) is asserted whenever a qualified ||LF|| primitive is received. In the XGMII transmit path, each NOS (Not Operational) primitive sequence generated by the PSM is translated into a ||RF|| (remote fault) primitive sequence before driving the XGMII transmit interface.

NOTE A simplification is to translate an XGMII qualified ||LF|| to loss_of_sync on reception and NOS to an XGMII ||RF|| on transmission.

9.7.4 10GFC primitive sequence qualification state diagram

9.7.4.1 General

The 10GFC primitive sequence qualification state diagram is similar to the Link Fault State Diagram in 10GbE: ISO/IEC 8802-3, replaces the FC-1 primitive sequence qualification and connects directly to the FC-1 Port State Machine. The 10GFC primitive sequence qualification state diagram shall be used as specified in figure 13.

9.7.4.2 Variables and counters

The 10GFC primitive sequence state diagram shall use the following variables and counters:

col_cnt - A count of the number of columns received not containing a Primitive Sequence. This counter increments at RX_CLK rate (on both the rising and falling clock transitions) unless reset.

last_seq_type - The seq_type of the previous Primitive Sequence received.

Copyright International Organization for Standardization
Reproduced by IHS under license with ISO
No reproduction or networking permitted without license from IHS Not for Resale

Values: NULL
seq_type

link_fault - An indicator of the fault status. (Used by 10GbE, unused by 10GFC.)
Values: OK; qual_seq_type = !(Local Fault OR Remote Fault)
FAIL; fault detected by the PHY OR qual_seq_type=(Local Fault OR Remote Fault)

loss_of_signal - An optional indicator of no XAUI signal which may be used by the PSM. It may be provided as an out of band signal by the XGXS device. It is one of the conditions for Local Fault ||LF||.
Values: OK; good signal detected by the PHY
FAIL; loss of signal detected by the PHY

loss_of_sync - An indicator of a local fault used by the PSM. It may be provided as an out of band signal by the XGXS device. It is asserted when a qualified Local Fault ||LF|| is present.
Values: OK; qual_seq_type = !Local Fault
FAIL; qual_seq_type = Local Fault

qual_seq_type - seq_type that has been qualified by receiving the proper number of Primitive Sequences.
Values: NULL when reset is true or no sequence for 128 columns or more
seq_type

reset - Condition that is true until such time as the power supply for the device that contains the 10GFC logic has reached the operating region.
Values: FALSE: The device is completely powered and has not been reset (default).
TRUE: The device has not been completely powered or has been reset.

RXI - XGMII receive data or control characters

RXIQ - RXI qualified data or control characters
Values: if (qual_seq_type!=NULL) RXIQ <= qual_seq_type
else RXIQ <= RXI (default).

seq_cnt - A count of the number of received Primitive Sequences of the same type.

seq_type - The value of the current Primitive Sequence.
Values: Local Fault
Remote Fault
10GFC defined or reserved Primitive Sequence

sequence - A new column received on RXI comprising a Primitive Sequence of four bytes and consisting of a Sequence control character in Lane 0 and a seq_type in Lanes 1, 2, and 3.

The 10GFC Receive qualification of ||Q|| is summarized as follows:

a) The variable qual_seq_type is set to the value of a received Sequence ordered_set when four Primitive Sequences ||Q|| containing the same value have been received where each pair of Primitive Sequences is separated by less than 128 columns and with no intervening Primitive Sequences of a different value;

b) Resetting the variable qual_seq_type to no sequence type (null) occurs when no ||Q|| has been received for 128 columns or more.

NOTE 10GFC Receive qualification addresses both 8B/10B and 64B/66B PCS operation.

Copyright International Organization for Standardization
Reproduced by IHS under license with ISO
No reproduction or networking permitted without license from IHS Not for Resale

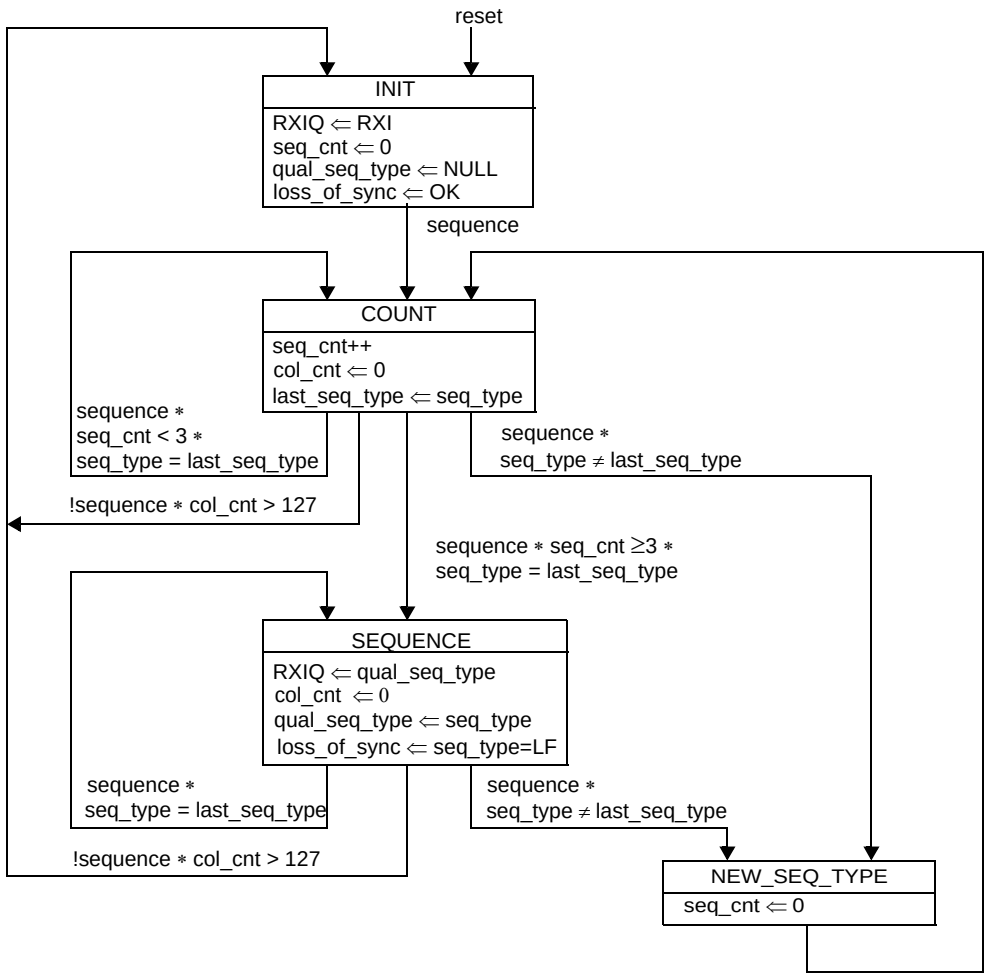

Figure 13 – 10GFC primitive sequence qualification state diagram

9.7.5 XGMII and FC-1 primitive sequence interaction

Tables 25 through 27 provide examples of the XGMII and FC-1 operations for Primitive Sequences. See 9.4 for definitions of ordered sets and 12.4 for translation between XGMII, 8B/10B PCS and back to XGMII. The examples use Primitive Sequences OLS (K28.4 - D21.1 - D10.4 - D21.2), LR (K28.4 - D09.2 - D31.5 - D09.2), and LRR (K28.4 - D21.1 - D31.5 - D09.2).

9.8 FC-1 level rules, requirements and functions

9.8.1 General

This clause lists the differences between what is specified within FC-FS for FC-1 level functions and required for 10GFC operation below the XGMII interface.

9.8.2 FC-1 link fault and error indications

The loss-of-sync signal is provided by the 10GFC primitive sequence state diagram as defined in 9.7.4. The optional loss-of-signal may be provided by an out of band means. The detection of loss-of-signal within the PCS will cause the XGMII Local Fault ||LF|| primitive which should result in loss-of-sync to be asserted. NOS meaning is modified by the 10GFC mapping. NOS is generated when a XGMII Remote Fault ||RF|| primitive is received and qualified from the distant node.

Copyright International Organization for Standardization
Reproduced by IHS under license with ISO
No reproduction or networking permitted without license from IHS
Not for Resale

Table 25 – Primitive sequence start

TXI / XGMII (transmit)																												
Lane 0	..	I	I	..	I	O	O	O	O	O	..	O	O	..	O	O	..	O	O	..	O	O	O	O	O	O	O	O
Lane 1	..	I	I	..	I	L	L	L	L	L	..	L	L	..	L	L	..	L	L	..	L	L	L	L	L	L	L	L
Lane 2	..	I	I	..	I	S	S	S	S	S	..	S	S	..	S	S	..	S	S	..	S	S	S	S	S	S	S	S
Lane 3	..	I	I	..	I						..			..			..			..								
8B/10B PCS																												
Lane 0	..	A	R	..	K	R	R	A	O	R	..	A	O	..	A	O	..	A	O	..	A	O	R	K	K	R	K	R
Lane 1	..	A	R	..	K	R	R	A	L	R	..	A	L	..	A	L	..	A	L	..	A	L	R	K	K	R	K	R
Lane 2	..	A	R	..	K	R	R	A	S	R	..	A	S	..	A	S	..	A	S	..	A	S	R	K	K	R	K	R
Lane 3	..	A	R	..	K	R	R	A		R	..	A		..	A		..	A		..	A		R	K	K	R	K	R
RXI / XGMII (receive)																												
Lane 0	..	I	I	..	I	I	I	I	O	I	..	I	O	..	I	O	..	I	O	..	I	O	I	I	I	I	I	I
Lane 1	..	I	I	..	I	I	I	I	L	I	..	I	L	..	I	L	..	I	L	..	I	L	I	I	I	I	I	I
Lane 2	..	I	I	..	I	I	I	I	S	I	..	I	S	..	I	S	..	I	S	..	I	S	I	I	I	I	I	I
Lane 3	..	I	I	..	I	I	I	I		I	..	I		..	I		..	I		..	I		I	I	I	I	I	I
columns:								x	0	1		30	31									379	380	381	382	383	384	385
RFC-1 / FC-1 Receive Qualified Data Path																												
Lane 0	..	I	I	..	I	I	I	I	I	I	..	I	I	..	I	I	..	I	O	..	O	O	O	O	O	O	O	O
Lane 1	..	I	I	..	I	I	I	I	I	I	..	I	I	..	I	I	..	I	L	..	L	L	L	L	L	L	L	L
Lane 2	..	I	I	..	I	I	I	I	I	I	..	I	I	..	I	I	..	I	S	..	S	S	S	S	S	S	S	S
Lane 3	..	I	I	..	I	I	I	I	I	I	..	I	I	..	I	I	..	I		..								

FC-1 provides for detection of an invalid character within a frame as an error (see also 9.4.5).

9.8.3 FC_Port state machine

The 10GFC level provides the translations necessary for the standard FC-1 functions to operate and interfaces directly to the FC_Port State Machine (PSM) as described in FC-FS. FC-FS primitive sequence qualification is replaced by the state diagram in figure 13. FC-FS primitive sequences are translated to XGMII primitive sequences for both transmission and reception (see tables 23 and 24).

9.8.4 Arbitrated loop functions

Arbitrated loop functions defined in FC-AL-2 are not supported and outside the scope of this specification. All FC-AL-2 ordered set are reserved and shall be passed through the 10GFC level without modification.

FC-AL-2 ordered set mapping, translations and related topics are provided in annex C for future reference.

9.8.5 Inter-frame gap (IFG) rules

The minimum IFG shall be six columns when originated by the FC-2 layer of any device other than a buffered switch. The minimum IFG shall be two columns when originated by the FC-2 layer of a buffered switch.

Copyright International Organization for Standardization
Reproduced by IHS under license with ISO
No reproduction or networking permitted without license from IHS
Not for Resale

Table 26 – Changing primitive sequence

TXI / XGMII (transmit)																											
Lane 0	..	O	O	..	O	L	L	L	L	L	..	L	L	..	L	L	..	L	L	..	L	L	L	L	L	L	L	L
Lane 1	..	L	L	..	L	R	R	R	R	R	..	R	R	..	R	R	..	R	R	..	R	R	R	R	R	R	R	R
Lane 2	..	S	S	..	S	R	R	R	R	R	..	R	R	..	R	R	..	R	R	..	R	R	R	R	R	R	R	R
Lane 3	..			..							..			..			..			..								
8B/10B PCS																											
Lane 0	..	A	O	..	K	R	R	A	L	R	..	A	L	..	A	L	..	A	L	..	A	L	R	K	K	R	K	R
Lane 1	..	A	L	..	K	R	R	A	R	R	..	A	R	..	A	R	..	A	R	..	A	R	R	K	K	R	K	R
Lane 2	..	A	S	..	K	R	R	A	R	R	..	A	R	..	A	R	..	A	R	..	A	R	R	K	K	R	K	R
Lane 3	..	A		..	K	R	R	A		R	..	A		..	A		..	A		..	A		R	K	K	R	K	R
RXI / XGMII (receive)																											
Lane 0	..	I	O	..	I	I	I	I	L	I	..	I	L	..	I	L	..	I	L	..	I	L	I	I	I	I	I	I
Lane 1	..	I	L	..	I	I	I	I	R	I	..	I	R	..	I	R	..	I	R	..	I	R	I	I	I	I	I	I
Lane 2	..	I	S	..	I	I	I	I	R	I	..	I	R	..	I	R	..	I	R	..	I	R	I	I	I	I	I	I
Lane 3	..	I		..	I	I	I	I		I	..	I		..	I		..	I		..	I		I	I	I	I	I	I
columns:								x	0	1											379	380	381	382	383	384	385
RFC-1 / FC-1 Receive Qualified Data Path																											
Lane 0	..	O	O	..	O	O	O	O	O	O	..	O	O	..	O	O	..	O	L	..	L	L	L	L	L	L	L	L
Lane 1	..	L	L	..	L	L	L	L	L	L	..	L	L	..	L	L	..	L	R	..	R	R	R	R	R	R	R	R
Lane 2	..	S	S	..	S	S	S	S	S	S	..	S	S	..	S	S	..	S	R	..	R	R	R	R	R	R	R	R
Lane 3	..			..							..			..			..			..								

The minimum IFG may be a minimum of one column when received by an upper layer if Idle (||I|| or ||IDLE||) columns were removed for clock frequency mismatch.

NOTE One column is a change from the FC-FS and FC-AL-2 minimum of two Idles.

||EOF|| shall always be followed by an ||IDLE|| to function with 8B/10B or 64B/66B PCS. Unbuffered switches, retimers and other retransmission devices may directly connect the XGMII receive signals to the XGMII transmit signals.

9.8.6 XGMII primitive sequence ||Q|| rules

Frames shall not be transmitted during Primitive Sequence transmission on the XGMII. A Primitive Sequence ||Q|| value shall be repeated:

a) for a minimum of 512 columns (128 * 4) when transmitted on the XGMII interface, if the Primitive Sequence protocol does not have a Primitive Sequence response:
b) until an expected Primitive Sequence is received in response or the Primitive Sequence protocol timeout expires, if the Primitive Sequence protocol has a Primitive Sequnce response.

Errors of any character of a Primitive Sequence column ||Q|| may result in the Primitive Sequence not being recognized.

Primitive Signals or frames shall not be transmitted by FC-1 for a minimum of 256 columns after the end of a Primitive Sequence to ensure they will be properly received.

Copyright International Organization for Standardization
Reproduced by IHS under license with ISO
No reproduction or networking permitted without license from IHS
Not for Resale

9.8.7 XGMII primitive signal ||P|| rules

The transmission of Primitive Signals ||P|| shall be prohibited during Primitive Sequence ||Q|| transmission on XGMII. Receipt of a Primitive Signal during Primitive Sequence reception shall not cause an error.

Each Primitive Signal ||P|| other than Idle shall have a minimum of two Idles preceding and following them when originated by the FC-1. Primitive Signals may be received by an FC-1 with a minimum of zero Idles preceding or following them if Idle columns (|||I|| or ||IDLE||) were removed for clock frequency mismatch.

The exception to this rule is for Consecutive Clock Sync primitives, which require three primitives in a row, preceded and followed by two Idles.

Table 27 – Ending primitive sequence

TXI / XGMII (transmit)																												
Lane 0	..	L	L	..	L	I	I	I	I	I	..	I	I	..	I	I	..	I	I	..	I	I	I	I	I	I	I	I
Lane 1	..	R	R	..	R	I	I	I	I	I	..	I	I	..	I	I	..	I	I	..	I	I	I	I	I	I	I	I
Lane 2	..	R	R	..	R	I	I	I	I	I	..	I	I	..	I	I	..	I	I	..	I	I	I	I	I	I	I	I
Lane 3	..			..		I	I	I	I	I	..	I	I	..	I	I	..	I	I	..	I	I	I	I	I	I	I	I
8B/10B PCS																												
Lane 0	..	A	L	..	K	R	R	A	L	R	..	A	R	..	A	K	..	A	R	..	A	R	R	K	K	R	K	R
Lane 1	..	A	R	..	K	R	R	A	R	R	..	A	R	..	A	K	..	A	R	..	A	R	R	K	K	R	K	R
Lane 2	..	A	R	..	K	R	R	A	R	R	..	A	R	..	A	K	..	A	R	..	A	R	R	K	K	R	K	R
Lane 3	..	A		..	K	R	R	A		R	..	A	R	..	A	K	..	A	R	..	A	R	R	K	K	R	K	R
RXI / XGMII (receive)																												
Lane 0	..	I	L	..	I	I	I	I	L	I	..	I	I	..	I	I	..	I	I	..	I	I	I	I	I	I	I	I
Lane 1	..	I	R	..	I	I	I	I	R	I	..	I	I	..	I	I	..	I	I	..	I	I	I	I	I	I	I	I
Lane 2	..	I	R	..	I	I	I	I	R	I	..	I	I	..	I	I	..	I	I	..	I	I	I	I	I	I	I	I
Lane 3	..	I		..	I	I	I	I		I	..	I	I	..	I	I	..	I	I	..	I	I	I	I	I	I	I	I
columns:								x	0	1		30	31									126	127	128	129	130	131	132
RFC-1 / FC-1 Receive Qualified Data Path																												
Lane 0	..	L	L	..	L	L	L	L	L	L	..	L	L	..	L	L	..	L	L	..	L	L	L	I	I	I	I	I
Lane 1	..	R	R	..	R	R	R	R	R	R	..	R	R	..	R	R	..	R	R	..	R	R	R	I	I	I	I	I
Lane 2	..	R	R	..	R	R	R	R	R	R	..	R	R	..	R	R	..	R	R	..	R	R	R	I	I	I	I	I
Lane 3	..			..							..			..			..			..				I	I	I	I	I

9.8.8 EOF handling

9.8.8.1 EOF disparity

10GFC transmits encoded data only on the XAUI interface. Since this interface has four parallel physical lanes, disparity is not calculated across the serial bit stream of the frame as it is in 1 or 2 GFC. Disparity is calculated independently across each lane, and as a consequence every fourth character of a frame. Because of this characteristic, there is no need to supply two versions of EOF, and a single ordered set, EOFy_X, is defined where y is any of the EOF variations. EOFy_X is equivalent to the EOFy(-). This leads to a number of consequences for both Fibre Channel devices and fabric elements outlined in the following subclauses.

Copyright International Organization for Standardization
Reproduced by IHS under license with ISO
No reproduction or networking permitted without license from IHS
Not for Resale

9.8.8.2 EOF transmission

The 10GFC level shall translate both EOFy(+) (if used) and EOFy(-) to EOFy_X for transmission on XGMII.

Fabric elements shall translate the EOFy_X received to EOFy(-) at the FC-FS layer.

9.8.8.3 EOF Reception

The 10GFC level may translate EOFy_X to either EOFy(+) or EOFy(-) although EOFy(-) is the natural choice. Disparity is verified within the PCS.

The correct disparity of the EOFy will be generated if the frame is retransmitted on either 1, or 2 GFC links. Typically one bit of the data character is inverted depending on the disparity required on a single lane EOF transmission.

9.8.9 10GFC Errors (/E/)

A 10GFC frame with an /E/ or other control character between the SOF and EOF shall ensure the FC-1 layer or above detects the error. The preferred method is to replace an EOF which is not EOFa, with an EOF per FC-FS rules. The /E/ may be replaced by a D30.7 in some devices. See 9.4.5.

NOTE EOFn should be replaced with EOFni, EOFdt with EOFdti or EOFrt with EOFrti.

Errors during the IFG may replace a character in error or the character where the error was detected with an /E/. This may result in /A/, /K/, /R/, k07 or any valid or invalid control character appearing on any column.

Copyright International Organization for Standardization
Reproduced by IHS under license with ISO
No reproduction or networking permitted without license from IHS Not for Resale

10 10 gigabit media independent interface (XGMII)

10.1 General

Much of this clause is a summary of the mapping of 10GFC to the details provided within 10GbE: ISO/IEC 8802-3. The intent of this standard is to provide additional information about 10GFC usage so that 10GbE and 10GFC can share the same devices.

10.2 Overview

10.2.1 General

This clause defines the logical and electrical characteristics for the 10 Gigabit Media Independent Interface (XGMII) as specified in 10GbE: ISO/IEC 8802-3. The XGMII provides an optional FC-1 electrical interconnection. The XGMII interface may be used to physically connect to external or internal devices which are common to both 10GbE and 10GFC. The XGMII Extender Sublayer (XGXS) and 10 Gigabit Attachment Unit Interface (XAUI) is defined in clause 11.

10.2.2 XGMII characteristics

The XGMII has the following characteristics:

a) It is capable of supporting 10,2 Gb/s operation;

b) It provides independent 32-bit-wide transmit and receive data paths;

c) It provides one control signal per byte for transmit and receive data paths;

d) It provides one clock signal using both positive and negative going edges, for each data direction;

e) Data and control signals are synchronous to clock references;

f) It uses signal levels, compatible with common CMOS digital ASIC processes and some bipolar processes.

The XGMII is a very short chip-to-chip (integrated circuit to integrated circuit) interface for devices which choose not to integrate XGXS to XAUI interface. The XAUI interface is used to provide media independence for use with any of PMDs specified in this standard.

10.2.3 Rate of operation

The XGMII operates at a signalling rate of exactly 2 % higher than the XGMII specified in 10GbE: ISO/IEC 8802-3.

The Transmit Clock (TX_CLK) and the Receive Clock (RX_CLK) frequency is 159,375 MHz +/- 100 ppm (0,01 %), one-sixty-forth of the FC-2 data rate.

10.2.4 Byte lane connections

Byte lane ordering is detailed in 9.3. The TXD/TXC and RXD/RXC to lane associations are the same as defined in 10GbE: ISO/IEC 8802-3 with the exception that 10GFC bytes are arranged in big endian order. Byte to lane connections are specified in table 28.

--`,,```,,,,````-`-`,,`,,`,`,,`---

Copyright International Organization for Standardization
Reproduced by IHS under license with ISO
No reproduction or networking permitted without license from IHS Not for Resale

Table 28 – Byte lane connections

10GFC TXD RXD	10GbE TXD RXD	10GbE TXC RXC	Lane
<31:24>	<7:0>	<0>	0
<23:16>	<15:8>	<1>	1
<15:8>	<23:16>	<2>	2
<7:0>	<31:24>	<3>	3
NOTE Although the CRC generation is the same for 10GFC and 10GbE, this byte reversal will normally result in a CRC error if received by the other standard.			

10.3 XGMII data stream

10.3.1 General

Using the control characters defined in 9.4, a general frame layout for both 10GFC and 10GbE is illustrated in table 29 below with an inter frame Idle sequence.

Table 29 – 10GFC and 10GbE XAUI frame layout

10GFC Data Frame Format															
Lane 0 (D<31:24>)	/I/	/I/	/I/	***/S/***	/d_h/	/d_h/	...	/d/	...	/d/	/d_c/	***/d_t/***	/I/	/I/	/I/
Lane 1 (D<23:16>)	/I/	/I/	/I/	***/ds/***	/d_h/	/d_h/	...	/d/	...	/d/	/d_c/	***/d_t/***	/I/	/I/	/I/
Lane 2 (D<15:8>)	/I/	/I/	/I/	***/ds/***	/d_h/	/d_h/	...	/d/	...	/d/	/d_c/	***/d_t/***	/I/	/I/	/I/
Lane 3 (D<7:0>)	/I/	/I/	/I/	***/ds/***	/d_h/	/d_h/	...	/d/	...	/d/	/d_c/	***/T/***	/I/	/I/	/I/
	IFG			SOF	calculate CRC						CRC	EOF	IFG		
10GbE Data Frame Format															
Lane 0 (D<7:0>)	/I/	/I/	/I/	***/S/***	***/d_p/***	/d_h/	...	/d/	...	/d/	/d_c/	***/T/***	/I/	/I/	/I/
Lane 1 (D<15:8>)	/I/	/I/	/I/	***/d_p/***	***/d_p/***	/d_h/	...	/d/	...	/d/	/d_c/	/I/	/I/	/I/	/I/
Lane 2 (D<23:16>)	/I/	/I/	/I/	***/d_p/***	***/d_p/***	/d_h/	...	/d/	...	/d/	/d_c/	/I/	/I/	/I/	/I/
Lane 3 (D<31:24>)	/I/	/I/	/I/	***/d_p/***	***/d_p/***	/d_h/	...	/d/	...	/d/	/d_c/	/I/	/I/	/I/	/I/
	IFG			SOF	calculate CRC						CRC	IFG			

Table Key:
/S/d_s/d_s/d_s/ - 10GFC SOF delimiter; /S/d_p/d_p/d_p/d_p/d_p/d_p/d_p/ - 10GbE SOF delimiter and preamble
/d_h/ - Frame header data
/d/ - Frame payload data
/d_c/d_c/d_c/d_c/ - Frame CRC
/d_t/d_t/d_t/T/- 10GFC EOF delimiter; /T/ - 10GbE EOF delimiter

10.3.2 Inter-frame gap (IFG)

The Inter-Frame Gap (IFG) is defined as the character after the /T/ code to the character before the /S/ code.

NOTE The 10GbE inter-packet gap includes the /T/ character and the minimum size is five bytes whereas the 10GFC IFG does not include the /T/ character resulting in a minimum of four bytes (one column).

Copyright International Organization for Standardization
Reproduced by IHS under license with ISO
No reproduction or networking permitted without license from IHS Not for Resale

10.3.3 Preamble and start of frame (SOF)

The Start of Frame ||SOF|| has /S/ on Lane 0 with three data characters on Lanes 1, 2 and 3. The preamble specified in 10GbE: ISO/IEC 8802-3 is not applicable to 10GFC. The first eight bytes of a Fibre Channel frame include the ||SOF|| and the first four bytes of the FC Header.

10.3.4 Data frame size

The frame size is defined from and including the /S/ code to and including the /T/ code. For 10GFC, the minimum frame size is 36 bytes and the maximum frame size is 2 148 bytes.

10.3.5 Data ||CRC||

CRC is calculated from the column after ||SOF|| to the two columns before ||EOF||. CRC is placed in the column immediately preceding ||EOF||. FC data is always 32-bit aligned so the CRC will always be column aligned for ||CRC||.

NOTE Even equal data streams of all zero will result in a CRC error if generated for 10GbE and received by 10GbE plus an SOF type error if generated for 10GFC and received by 10GbE.

10.3.6 End of frame ||EOF||

The End of Frame ||EOF|| only uses /T/ on Lane 3 with three data characters on Lanes 0, 1 and 2.

10.4 XGMII fault Indications

XGMII receive interface fault conditions are indicated by receiving ||LF||. Regaining good signal level, bit and byte sync is indicated by either ||IDLE||, ||RF|| or ||OLS|| as provided by the remote node.

Copyright International Organization for Standardization
Reproduced by IHS under license with ISO
No reproduction or networking permitted without license from IHS Not for Resale

11 XGMII extender sublayer (XGXS) and 10 gigabit attachment unit interface (XAUI)

11.1 General

The purpose of this interface is to provide an optional electrical interconnection. The XGMII Extender Sublayer (XGXS) and Ten Gigabit Attachment Unit Interface (XAUI) may be used to physically partition FC-1 and FC-0 elements. This clause defines the logical and electrical characteristics of the XGXS and XAUI.

The XGXS and XAUI is fully specified in 10GbE: ISO/IEC 8802-3. The XGXS and XAUI operates at a signalling rate of 3,187 5 GBaud +/-100 ppm, exactly 2 % higher than the XAUI specified in 10GbE: ISO/IEC 8802-3.

XAUI utilizes the 8B/10B transmission code on each of its four serial lanes in support of a cumulative data rate of 10,2 Gb/s. The 8B/10B transmission code is specified in clause 12.

The XGXS and XAUI has the following characteristics.

a) It is capable of supporting 10,2 Gb/s FC-2 payload operation.

b) It provides a data link consisting of four independent serial transmit and receive data lanes.

c) It employs 8B/10B transmission code over serial transmit and receive data lanes.

d) All 8B/10B functions such as running disparity calculation and code violation detection are performed on a per lane basis.

e) It provides mapping of FC-1 data and control signals to quad serial transmit and receive data lanes.

f) It provides synchronization of the data stream over each data lane at the receiver.

g) It provides deskew of the data streams across all lanes at the receiver.

h) It provides an low EMI Idle protocol used to initialize the link and support clock tolerance compensation.

i) It uses signal levels, compatible with common CMOS digital ASIC processes and some bipolar processes.

The implementation of the interface is an extended chip-to-chip (integrated circuit to integrated circuit) interface implemented with traces on a printed circuit board. XAUI may be used as the electrical interface to optical PCS devices.

11.2 XGXS and XAUI rate of operation

The signalling rate of each of four XGXS and XAUI lanes is 3,187 5 GBd +/- 100 ppm (0,01 %).

Copyright International Organization for Standardization
Reproduced by IHS under license with ISO
No reproduction or networking permitted without license from IHS Not for Resale

12 8B/10B physical coding sublayer (PCS) and physical medium attachment (PMA) sublayers

12.1 General

Much of this clause is a summary of the mapping of 10GFC to the details provided within 10GbE. The intent of this standard is to provide additional information about 10GFC usage so that 10GbE and 10GFC can share the same devices.

12.2 Overview

The 8B/10B Physical Coding Sublayer (PCS) and Physical Medium Attachment (PMA) sublayers are intended for data transport across the four lane physical variants specified in clause 6. The transmission code used by PCS, referred to as 8B/10B, is identical to that specified in FC-FS and 10GbE.

The 10GFC PCS and PMA sublayers are generally specified in 10GbE. The PCS and PMA operate at a signalling rate of 3,187 5 GBaud +/- 100 ppm, exactly 2 % higher than the PCS and PMA specified in 10GbE. 10GFC extensions to 10GbE are specified in this clause.

The Physical Medium Dependant (PMD) sublayer allows for different physical mediums to be used having an Medium Dependant Interface (MDI) and is specified in 10GbE. Note that XAUI is functionally equivalent to a physical medium.

12.3 Rate of operation

The signalling rate of each of the four PMA lanes is 3,187 5 GBaud +/- 100 ppm.

12.4 Ordered set mapping between XGMII and 8B/10B PCS

12.4.1 General

Tables 30 and 31 define the mapping of XGMII to 8B/10B PCS and 8B/10B PCS to XGMII. They are based on similar tables in 10GbE. Table 32 defines Ordered Sets and special characters used by the PCS.

12.4.2 8B/10B encoding

Characters are encoded and decoded using the 8B/10B scheme described in FC-FS. Additional special characters are defined for Idle generation and clock frequency mismatch management.

NOTE ||IDLE|| normally refers to (k07-k07-k07-k07) on XGMII; /I/ or ||I|| to /K/, ||A||, ||K|| or ||R|| on 8B/10B PCS.

12.4.3 Data skew and multiple clock domain operation

Data is simultaneously transmitted across four lanes, and may become skewed at the receiving end due to different path delays between lanes. A column of ||A|| is used to align skewed data. ||A|| is inserted randomly between 17 and 32 columns apart during an Idle sequence.

PCS and PMA implementations which utilize multiple clock domains may result is significant skew or clock frequency mismatch between the multiple domains. A column of ||R|| may be inserted or deleted in the Idle sequence or the second consecutive ||Q|| may be deleted to adjust for multiple clock domain frequency mismatch.

Copyright International Organization for Standardization
Reproduced by IHS under license with ISO
No reproduction or networking permitted without license from IHS Not for Resale

Table 30 – XGMII to 8B/10B PCS mapping

XGMII TXC	XGMII TXD	XAUI Character	Description
0	00 through 0xFF	Dx.y	Normal data transmission
1	0x07	K28.0 or K28.3 or K28.5	Idle in ||I|| column
1	0x07	K28.5	Idle in ||T|| (unused by 10GFC)
1	0x07	K30.7	Idle not in ||I|| or ||T|| column. This is an invalid special character if encoded.
1	0x1C	K28.0	Reserved XGMII character (/R/, Skip)
1	0x3C	K28.1	Reserved XGMII character
1	0x5C	K28.2	Primitive XGMII character (/P/)
1	0x7C	K28.3	Reserved XGMII character (/A/, Align)
1	0x9C	K28.4	Sequence XGMII character (/Q/)
1	0xBC	K28.5	Reserved XGMII character (/K/, Sync)
1	0xDC	K28.6	Reserved XGMII character
1	0xF7	K23.7	Reserved XGMII character
1	0xFB	K27.7	Start XGMII character (/S/)
1	0xFC	K28.7	Reserved XGMII character
1	0xFD	K29.7	Terminate XGMII character (/T/)
1	0xFE	K30.7	Error XGMII character (/E/)
1	Any other value	K30.7	Invalid XGMII character (/E/)

NOTE 1 Values in TXD column are in hexadecimal.
NOTE 2 Dx.y indicates any data character.
NOTE 3 ||Q|| occurs after ||A|| otherwise ||A||, ||K|| or ||R|| occurs on XAUI during XGMII idles.
NOTE 4 Errors may allow /A/, /R/ or /K/ to appear on XGMII.

12.5 8B/10B PCS to XGMII mapping

12.5.1 Reserved codes

The following codes are reserved for future use and shall be passed through all devices: K28.1, K28.6 and K23.7.

NOTE K28.7 is not supported by 64B/66B devices and generates an unaligned comma-character when two are adjacent. 64B/66B devices pass through the reserved codes if they are part of a stream of control characters but not if they are mixed with data characters.

Errors may allow /A/, /R/ or /K/ to appear on XGMII.

12.5.2 Invalid characters

Invalid characters include both code violations and disparity errors. There are 12 legal special characters: K23.7, K27.7, K28.0 through K28.7, K29.7 and K30.7.

12.5.3 Terminate ||T||

The column following the ||T|| will always be an ||IDLE|| on the XGMII transmit data path and a ||A|| or ||K|| on the 8B/10B PCS receiver. 10GFC only uses 10GbE $||T_3||$.

--`,,```,,,,````-`-`,,`,,`,`,,`---

Copyright International Organization for Standardization
Reproduced by IHS under license with ISO
No reproduction or networking permitted without license from IHS Not for Resale

Table 31 – 8B/10B PCS to XGMII mapping

XGMII RXC	XGMII RXD	XAUI Character	Description
0	00 through 0xFF	Dx.y	Normal data reception
1	0x07	K28.0 or K28.3 or K28.5	Idle in ||I|| column. This is an Illegal special character used to represent Idle.
1	0x07	K28.5	Idle in ||T|| (unused by 10GFC)
1	0x1C	K28.0	XGMII /R/ not in ||I||
1	0x3C	K28.1	Reserved XGMII character
1	0x5C	K28.2	Primitive XGMII character (/P/)
1	0x7C	K28.3	XGMII /A/ not in ||I||
1	0x9C	K28.4	Sequence XGMII character (/Q/)
1	0xBC	K28.5	XGMII /K/ not in ||I|| or ||T||
1	0xDC	K28.6	Reserved XGMII character
1	0xF7	K23.7	Reserved XGMII character
1	0xFB	K27.7	Start XGMII character (/S/)
1	0xFC	K28.7	Reserved XGMII character
1	0xFD	K29.7	Terminate XGMII character (/T/)
1	0xFE	K30.7	Error XGMII character (/E/)
1	0xFE	Invalid character	Received character
NOTE 1 Values in RXD column are in hexadecimal. NOTE 2 Dx.y indicates any data character. NOTE 3 Errors may allow /A/, /R/ or /K/ to appear on XGMII			

12.5.4 Error /E/

A column which contains an /E/ character on the XGMII transmit path is transmitted unaffected. /E/ is generated on a per lane basis for 8B/10B code violations or disparity errors. An /E/ is forwarded once generated. Errors may result in /R/, /K/ or /A/ characters on XGMII. See annex D for details.

12.6 Transmit and Receive state diagrams

The 8B/10B PCS Transmit Source State Diagram and the PCS Receive State Diagram from 10GbE are summarized in annex D.

--`,,```,,,,````-`-`,,`,,`,`,,`---

Copyright International Organization for Standardization
Reproduced by IHS under license with ISO
No reproduction or networking permitted without license from IHS Not for Resale

Table 32 – Ordered sets and special characters

Abbr.	Ordered Set	Number of Characters	8B/10B Encoding
||I||	**IDLE**		**Substitute for XGMII ||Idle||**
||K||	Sync column	4	K28.5 - K28.5 - K28.5 - K28.5
||R||	Skip column	4	K28.0 - K28.0 - K28.0 - K28.0
||A||	Align column	4	K28.3 - K28.3 - K28.3 - K28.3
	Encapsulation		
||SOFx|| or ||S||	Start of Frame	4	K27.7 - Dx.y - Dx.y - Dx.y
||EOF|| or ||T||	End of Frame	4	Dx.y - Dx.y - Dx.y - K29.7
	Control		
/E/	Error character	1	/K30.7/
	Primitive Sequence		
||Q||	XGMII Sequence column	4	K28.4 - Dx.y - Dx.y - Dx.y
||A||, ||Q||	PCS Sequence column on transmit	8	K28.3 - K28.3 - K28.3 - K28.3 then K28.4 - Dx.y - Dx.y - Dx.y
||Q||	Primitive Sequence	4	K28.4 - Dx.y - Dx.y - Dx.y
||LF||	Local_Fault	4	K28.4 - D0.0 - D0.0 - D1.0
||RF||	Remote_Fault	4	K28.4 - D0.0 - D0.0 - D2.0
-	others	4	See clause 9
	Primitive Signal		
||P||	Primitive Signal	4	K28.2 - Dx.y - Dx.y - Dx.y
-	others	4	See clause 9
NOTE 10GFC only uses 10GbE value ||T_3||. ||T_0||, ||T_1|| or ||T_2|| are never used.			

--`,,```,,,,````-`-`,,`,,`,`,,`---
Copyright International Organization for Standardization
Reproduced by IHS under license with ISO
No reproduction or networking permitted without license from IHS
Not for Resale

13 Physical coding sublayer (PCS) for 64B/66B

13.1 General

64B/66B transmission code is intended for 10,2 Gb/s data transport across a single fiber optic cable. The primary reason for the development of this code is to provide minimal overhead above the 10,2 Gb/s serial data rate to allow the use of optoelectronic components developed for other high volume 10 Gb/s communications applications such as SONET OC-192.

The 64B/66B transmission code is specified in 10GbE: ISO/IEC 8802-3. The 10GFC 64B/66B transmission code operates at a signalling rate of exactly 2 % higher than the 64B/66B transmission code specified in 10GbE: ISO/IEC 8802-3. 10GFC extensions to 10GbE: ISO/IEC 8802-3 are specified in this clause.

13.2 Single lane 64B/66B bit encoding

Data may be assembled from the XGMII interface into 64-bit words. Data is assembled from 32-bit words into 64-bit word quantities. Fibre Channel Data and Control words may appear in combinations which are a subset of all possible combinations specified in 10GbE: ISO/IEC 8802-3.

64-bit blocks are divided into two classes; containing only Data, or containing an Ordered Set. Those blocks containing an Ordered Set prepend an eight bit code to identify the specific format of the block and map the remaining characters to four, seven or eight-bit codes, depending on block type, to identify the type and order of the Ordered Sets. In some cases a character is also encoded implicit in the block type identifier (Start and Terminate characters for instance). All 64-bits of the all Data or Ordered Set block are then scrambled using the equation specified in 10GbE: ISO/IEC 8802-3. A two bit sync header is then added to each 64-bit block; an all Data block will receive a 01b sync header and an Ordered Set block will receive a 10b sync header. The 66-bit block is then ready for transmission.

Copyright International Organization for Standardization
Reproduced by IHS under license with ISO
No reproduction or networking permitted without license from IHS Not for Resale

14 10 gigabit sixteen bit interface (XSBI)

The purpose of this interface is to provide an optional FC-1 electrical interconnection. The XSBI is a 16:1 Mux/Demux Interface (XSBI) applicable to serial fiber optic physical variants.

The XSBI is specified in 10GbE: ISO/IEC 8802-3. The 10GFC XSBI transmission code operates at a signalling rate of exactly 2 % higher than the XSBI specified in 10GbE: ISO/IEC 8802-3.

Copyright International Organization for Standardization
Reproduced by IHS under license with ISO
No reproduction or networking permitted without license from IHS Not for Resale

15 Port management

The purpose of this clause is to provide an optional two-signal management interface that provides access to management parameters and services and register set.

The management interface has the following characteristics:

a) It includes a bi-directional data signal;

b) It includes a clock signal;

c) It includes a basic and extended management register set accessible via the management signals;

d) It provides physical and logical addressing to distinguish between multiple instantiations of the interface to multiple physical layer elements of the same link or links within the same Node.

When the optional port management is supported, it shall meet the requirements specified for the Management Data Input/Output (MDIO) Interface specified in 10GbE: ISO/IEC 8802-3 plus any extensions in this clause. Currently no extensions are specified.

Copyright International Organization for Standardization
Reproduced by IHS under license with ISO
No reproduction or networking permitted without license from IHS Not for Resale

Annex A
(informative)

Cable plant employing cross-connects

A.1 Characteristics of fiber optic cabling

The primary difference between the Tables contained in this Annex and those given in Clause 8 is a difference in the allocation for connection and splice loss. The maximum link distances for multimode and single mode fibre are calculated based on an allocation of 2,4 dB (based on statistical sampling) total connection and splice loss. The connection insertion loss allowance is designed to support usage of two cross-connects in the channel link budget. The insertion loss is specified for a connection that consists of a mated pair of optical connectors. Different loss characteristics may be used provided the loss requirements of table A.1 or table A.2 are met.

Table A.1 – Optical interface, cable plant and link budget (serial and parallel variants)

Description	1200-M5-SN-I	1200-M5E-SN-I	1200-M6-SN-I	1200-M5-SN4P-I	1200-M5E-SN4P-I	1200-M6-SN4P-I	1200-SM-LL-L
Subclause	6.3			6.2			6.5
Nominal operating wavelength (nm)	850						1 310
Signalling rate (Gbd)	10,518 75			3,187 5			10,518 75
Modal bandwidth (MHz•km)[1]	500[2]	2000[3,4]	200[2]	500[2]	2 000[3,4]	200[2]	N/A
Operating range (m)	0,5 to 80	0,5 to 280	0,5 to 33	0,5 to 120	0,5 to 200	0,5 to 57	2 to 9,200
Channel insertion loss (dB)[7]	2,7	3,4	2,5	2,8	3,1	2,6	6,1
Allocation for penalties[5]	4,5	3,9	4,5	3,1	2,9	3,3	3,3
Additional insertion loss allowed[6]	0,1	0,0	0,3	0,0	0,0	0,0	0,0

Notes:

1 Some users may want to install higher modal bandwidth fiber to facilitate future use of the cable plant for higher bit rate applications. For shorter distances, a lower bandwidth may be substituted, provided the performance requirements are met.

2 Minimum modal bandwidth at 850 nm using an overfilled launch (OFL) per IEC 60793-1-41.

3 Minimum effective modal bandwidth at 850 nm per IEC 60793-1-49. Fibers shall comply with IEC 60793-2-10, Type A1a.2.

4 See transmitter specifications in clause 6 for encircled flux requirements.

5 Link penalties are used for link budget calculations. They are not requirements and are not meant to be tested. A wavelength of 840 nm is used to calculate link penalties and additional insertion loss for serial PMDs with a nominal operating wavelength of 850 nm. A wavelength of 830 nm is used to calculate link penalties and additional insertion loss for parallel PMDs with a nominal operating wavelength of 850 nm. A wavelength of 1 260 nm is used to calculate link penalties and additional insertion loss for serial PMDs with a nominal operating wavelength of 1 310 nm.

6 This parameter is informational only and not required for 10GFC systems. The additional allowable insertion loss may be combined with the channel insertion loss to meet measured channel insertion loss but not to increase operating distance. Additional allowable insertion loss may be used to overcome insertion loss higher than the Channel insertion loss value and in some cases may be less than the value shown.

7 At nominal operating wavelength.

--`,,```,,,,````-`-`,,`,,`,`,,`---

Copyright International Organization for Standardization
Reproduced by IHS under license with ISO
No reproduction or networking permitted without license from IHS Not for Resale

Table A.2 – Optical interface, cable plant and link budget (CWDM variants)

PMD	1200-M5-SN4-I	1200-M5E-SN4-I	1200-M6-SN4-I	1200-M5-LC4-L	1200-M6-LC4-L	1200-SM-LC4-L
Subclause	6.4			6.6		
Nominal operating wavelength (nm)	850			1 300		1 310
Signalling rate (Gbd)	3,187 5					
Modal bandwidth (MHz•km)[1]	500[2]	1500[3,4]	200[2]	500[2]	500[2]	N/A
Operating range (m)	0,5 to 270	0,5 to 520	0,5 to 118	0,5 to 250	0,5 to 270	2 to 9 200
Channel insertion loss (dB)[7]	3,3	4,2	2,8	2,8	2,8	6,1
Allocation for penalties[5]	4,3	3,2	4,8	4,5	4,6	2,0
Additional allowable insertion loss[6]	0,0	0,0	0,2	0,2	0,1	0,0

Notes:

1 Some users may want to install higher modal bandwidth fiber to facilitate future use of the cable plant for higher bit rate applications. For shorter distances, a lower bandwidth may be substituted provided the performance requirements are met.

2 Minimum modal bandwidth at 850 nm using an overfilled launch (OFL) per IEC 60793-1-41.

3 Minimum effective modal bandwidth at 850 nm per IEC 60793-1-49. Fibers shall comply with IEC 60793-2-10, Type A1a.2.

4 See transmitter specifications in clause 6 for encircled flux requirements.

5 Link penalties are used for link budget calculations. They are not requirements and are not meant to be tested. A wavelength of 772,5 nm is used to calculate link penalties and additional insertion loss for PMDs with a nominal operating wavelength of 850 nm. A wavelength of 1269 nm is used to calculate link penalties and additional insertion loss for PMDs with a nominal operating wavelength of 1 310 nm.

6 This parameter is informational only and not required for 10GFC systems. The additional allowable insertion loss may be combined with the channel insertion loss to meet measured channel insertion loss but not to increase operating distance. Additional allowable insertion loss may be used to overcome insertion loss higher than the Channel insertion loss value and in some cases may be less than the value shown.

7 At nominal operating wavelength.

Copyright International Organization for Standardization
Reproduced by IHS under license with ISO
No reproduction or networking permitted without license from IHS Not for Resale

Annex B
(normative)

10GFC to SONET mapping

At the time of the 10GFC writing, there was no clear application for the direct mapping of 10GFC payload to SONET, SDH [ITU-T Rec. G.707] or OTN [ITU-T Rec. G.709]. It is the intention of the Fibre Channel community that at such a time as the market demands it, a 10GFC interface mapping will be defined to attach to a physical layer that is data-rate and format compatible with the SONET STS-192c transmission format defined by ANSI, as well as the Synchronous Digital Hierarchy (SDH) VC-4-64c container specified in ITU-T in Rec. G.707. If and when such a mapping is defined, it shall use the value hex ‘1C’ for the Signal Label (C2 Byte) to denote 10GFC. This value has been registered with the ITU-T to identify 10GFC traffic.

Copyright International Organization for Standardization
Reproduced by IHS under license with ISO
No reproduction or networking permitted without license from IHS Not for Resale

Annex C
(informative)

FC-AL-2 to 10GFC mapping

C.1 General

10GFC does not support Arbitrated Loop operation. This annex is provided as a summary of how to modify 10GFC for Fibre Channel Arbitrated Loop operation. It also describes how a 10GFC implementation with a legacy FC-AL-2 Loop Port State Machine can be forced to operate in point-to-point mode.

C.2 Overview

Most of the arbitrated loop primitive signals can be sent continuously for a long time. This is incompatible with the needs of the PHY. 10GbE: ISO/IEC 8802-3 defined Fsig (ordered set beginning with K28.2) was created for the needs of ordered sets which are not deletable and not sent continuously. 10GbE: ISO/IEC 8802-3 defined Fseq (ordered set beginning with K28.4) was created for the ordered sets that are sent continuously and are deletable. An arbitrated loop could send signals such as ARB for thousands of byte times. There are two problems with sending a continuous stream. It can cause EMI problems because any periodic signal will cause spectral peaks which can be about 20 B above the spectrum of the randomized idle. It does not present opportunities for the XGXS or PCS to do clock compensation. XGXS and the PCS are defined to do clock compensation by deleting Idles or Fseq.

Continuous streams of Fsig will require a more complex behavior where the PHY sublayer devices will need to know that some Fsig ordered sets are deletable while others are not. This means that they will behave differently than the 10 Gig Ethernet PHYs and it defeats the purpose of creating separate Fsig and Fseq ordered sets. This can be fixed by changing the Arbitrated loop primitive signals to use the Fseq ordered set or remove support for arbitrated loop. This will resolve both problems though it does result in increasing the per node delay because Fseq signals are sent only after /A/ in the 8B/10B coding. This could be mitigated somewhat by allowing the 10GFC RS to recognize the arbitrated loop primitive signals after receiving 2 matching Fseq signals rather than 4.

C.3 FC-AL-2 mapping

C.3.1 General

If 10GFC supports FC-AL-2 operation in the future, proposed translations for FC-AL-2 primitive signals are defined in table C.1 and primitive sequences in table C.2.

C.3.2 Unsupported FC-1 ordered sets

10GFC does not support the continuous transmission of the FC-AL-2 ARB primitive signal, as it would violate the following 10GFC rule: Each primitive signal ||P|| other than Idle shall have a minimum of two Idles preceding and following them when originated by the FC-1. New rules are needed to support loop arbitration and provide periodic Idles which may be deleted.

C.4 Concerns about FC-AL-2 operation

FC-AL-2 Loop Port State Machine (LPSM) would require modification within the 8B/10B PCS to provide for arbitrated loop operation at the XAUI interface.

Operation in arbitrated loop for 10GFC might be extremely inefficient if it were handled above the XGMII interface. Per node physical layer delay is about 10 word or 40 byte times for the receive path, plus about four word or 32 byte times from XGMII receive to XGMII transmit, then about 10 words or 40 byte times for the transmit path. That means that it would take 1120 or more byte times to arbitrate a 10 node loop. There is a similar delay for the open and for R_RDY propagation. Throughput on a 10 Gb/s arbitrated loop may

Copyright International Organization for Standardization
Reproduced by IHS under license with ISO
No reproduction or networking permitted without license from IHS Not for Resale

be poor unless the devices using it are implemented such that they exchange a number of frames per arbitration and their buffer-to-buffer flow control allows enough credit to minimize the need to wait for R_RDY.

C.5 Forcing LPSM to Point-to-Point Mode

If a 10GFC implementation uses a legacy FC-AL-2 Loop Port State Machine (LPSM), the LPSM can be forced to point-to-point mode by asserting the REQ(old-port) input to the LPSM, see ISO/IEC 14165-122. Other mechanisms may be defined..

Table C.1 – Primitive signals (arbitrated loop)

Abbr.	Delimiter Function	Interface	Ordered Set Lane 0-1-2-3
CLS CLS_X	Close	FC-AL-2	K28.5 - D5.4 - D21.5 - D21.5
		10GFC	K28.2 - D5.4 - D21.5 - D21.5
DHD DHD_X	Dynamic Half-Duplex	FC-AL-2	K28.5 - D10.4 - D21.5 - D21.5
		10GFC	K28.2 - D10.4 - D21.5 - D21.5
MRKtx MRKtx_X	Mark	FC-AL-2	K28.5 - D31.2 - MK_TP - AL_PS
		10GFC	K28.2 - D31.2 - MK_TP - AL_PS
OPNyx OPNyx_X	Open full-duplex	FC-AL-2	K28.5 - D17.4 - AL_PD - AL_PS
		10GFC	K28.2 - D17.4 - AL_PD - AL_PS
OPNyy OPNyy_X	Open half-duplex	FC-AL-2	K28.5 - D17.4 - AL_PD - AL_PD
		10GFC	K28.2 - D17.4 - AL_PD - AL_PD
OPNyr OPNyr_X	Open selective replicate	FC-AL-2	K28.5 - D17.4 - AL_PD - D31.7
		10GFC	K28.2 - D17.4 - AL_PD - D31.7
OPNfr OPNfr_X	Open broadcast replicate	FC-AL-2	K28.5 - D17.4 - D31.7 - D31.7
		10GFC	K28.2 - D17.4 - D31.7 - D31.7
ARB(val) ARB_X(val)	Arbitrate	FC-AL-2	K28.5 - D20.4 - val - val
		10GFC	K28.2 - D20.4 - val - val

Copyright International Organization for Standardization
Reproduced by IHS under license with ISO
No reproduction or networking permitted without license from IHS Not for Resale

Table C.2 – Primitive sequences (arbitrated loop)

Abbr.	Delimiter Function	Interface	Ordered Set Lane 0-1-2-3
LIP(F7,F7) LIP_X(F7,F7)	Loop Initialization--F7,F7	FC-AL-2	K28.5 - D21.0 - D23.7 - D23.7
		10GFC	K28.4 - D21.0 - D23.7 - D23.7
LIP(F8,F7) LIP_X(F8,F7)	Loop Initialization--F8,F7	FC-AL-2	K28.5 - D21.0 - D24.7 - D23.7
		10GFC	K28.4 - D21.0 - D24.7 - D23.7
LIP(F7,x) LIP_X(F7,x)	Loop Initialization--F7,x	FC-AL-2	K28.5 - D21.0 - D23.7 - AL_PS
		10GFC	K28.4 - D21.0 - D23.7 - AL_PS
LIP(F8,x) LIP_X(F8,x)	Loop Initialization--F8,x	FC-AL-2	K28.5 - D21.0 - D24.7 - AL_PS
		10GFC	K28.4 - D21.0 - D24.7 - AL_PS
LIPyx LIP_Xyx	Loop Initialization--reset	FC-AL-2	K28.5 - D21.0 - AL_PD - AL_PS
		10GFC	K28.4 - D21.0 - AL_PD - AL_PS
LIPfx LIP_Xfx	Loop Initialization--reset all	FC-AL-2	K28.5 - D21.0 - D31.7 - AL_PS
		10GFC	K28.4 - D21.0 - D31.7 - AL_PS
LPByx LPB_Xyx	Loop Port Bypass	FC-AL-2	K28.5 - D9.0 - AL_PD - AL_PS
		10GFC	K28.4 - D9.0 - AL_PD - AL_PS
LPBfx LPB_Xfx	Loop Port Bypass all	FC-AL-2	K28.5 - D9.0 - D31.7 - AL_PS
		10GFC	K28.4 - D9.0 - D31.7 - AL_PS
LPEyx LPE_Xyx	Loop Port Enable	FC-AL-2	K28.5 - D5.0 - AL_PD - AL_PS
		10GFC	K28.4 - D5.0 - AL_PD - AL_PS
LPEfx LPE_Xfx	Loop Port Enable all	FC-AL-2	K28.5 - D5.0 - D31.7 - AL_PS
		10GFC	K28.4 - D5.0 - D31.7 - AL_PS

Copyright International Organization for Standardization
Reproduced by IHS under license with ISO
No reproduction or networking permitted without license from IHS Not for Resale

Annex D
(informative)

8B/10B PCS State Diagrams

D.1 General

This annex is provided as a summary of how the 8B/10B PCS state diagrams function when transferring 10GbE: ISO/IEC 8802-3 or 10GFC data and primitives. See 10GbE: ISO/IEC 8802-3 for the details.

D.2 Overview

This is a description of operation of the primary state diagrams as defined in the 10GbE: ISO/IEC 8802-3. State diagrams, then tables, then figures and finally text take precedence in 10GbE: ISO/IEC 8802-3.

D.3 Transmit source state diagram

D.3.1 General

The 8B/10B PCS Transmit Source State Diagram in 10GbE: ISO/IEC 8802-3 must be followed exactly to ensure interoperation with other devices. This clause provides a verbal explanation of how the Transmit State Machine functioned as of 10GbE: ISO/IEC 8802-3.

A global reset statement forces either the SEND_K state to be executed until the reset statement is false.

A RESET signal forces the SEND_K state to be executed until it is false. When RESET is false and the XGMII transmit path does contain an ||IDLE|| or ||Q||, random ||A||, ||K||, ||R|| or ||A|| then ||Q|| will be issued by the 8B/10B PCS.

When the RESET signal is false and the XGMII transmit path does not contain an ||IDLE|| or ||Q||, the SEND_DATA state will be continuously executed. Then when the XGMII transmit path does contain an ||IDLE|| or ||Q||, random ||A||, ||K||, ||R|| or ||A|| followed by ||Q|| will be issued by the 8B/10B PCS.

NOTE Only ||I|| or ||Q|| on the XGMII transmit path will exercise the random nature of the ||A||, ||K|| and ||R|| generation.

||P|| or ||Q|| must never be next to ||T|| to function with 8B/10B or 64B/66B PCS devices. This requires ||T|| to always be followed by an ||IDLE|| on the XGMII transmit path and no device shall delete the column following ||T||.

The column following ||T|| must be either ||A|| or ||K|| for the 10GbE: ISO/IEC 8802-3 8B/10B check-end function to reflect disparity errors within a frame back to the CRC or EOF columns.

D.3.2 Send data state

Any character received on the XGMII transmit path which is not an ||IDLE|| or ||Q|| while RESET is false will always be sent to the 8B/10B PCS while in the SEND_DATA state. Each lane will be encoded on a lane basis. 10GFC has no additional requirements above those in 10GbE: ISO/IEC 8802-3.

NOTE ||A||, ||K|| and ||R|| on the XGMII transmit path are undefined by 10GbE: ISO/IEC 8802-3 or 10GFC. The XAUI outputs should not be tested using this method. Many devices will duplicate the ||A||, ||K||, ||R|| or ||P|| sequences from XGMII to XAUI unless internal character deletion is required.

Copyright International Organization for Standardization
Reproduced by IHS under license with ISO
No reproduction or networking permitted without license from IHS Not for Resale

D.3.3 Transmission errors

Any XGMII column containing an /E/ character will be sent in the SEND_DATA state. If the column with the /E/ is followed by an Idle, the Idle will be encoded as an ||A|| or ||K|| per the transition conditions for SEND_A and SEND_K states.

No illegal special characters are to be transmitted. For 10GbE: ISO/IEC 8802-3, XGMII /I/ or k07 not in ||I|| or ||T|| will be encoded as an /E/.

D.3.4 Primitive signal ||P|| transmission

Primitive Signals ||P|| are single Ordered Sets detected on the XGMII transmit data path. ||P|| will be encoded as they are detected. They will be substituted for the next ||A||, ||R||, or ||K|| column which would otherwise be transmitted.

A Primitive Signal ||P|| on the XGMII transmit path will always be sent to the 8B/10B PCS while in the SEND_DATA state. ||P|| will always be followed by ||K|| ||R|| or ||A|| ||R|| unless clock frequency mismatch management has removed the ||R||, an error was detected or Q_det is set. Some XGMII to 8B/10B PCS translation examples follow using a simplified syntax to show the various column patterns: PIIP to PARP, PKRP or PAQP; PIPIP to PKPKP, PAPKP or PKPAP, where I= ||I||, P= ||P||, A= ||A||, R= ||R||, K= ||K|| and Q= ||Q||.

D.3.5 Primitive sequence ||Q|| transmission

A Primitive Sequence ||Q|| is an Ordered Set which is transmitted continuously when originated by the FC-1 level. In order to reduce EMI it is desirable to combine Primitive Sequence with the randomized Idle pattern. As long as one Primitive Sequence ||Q|| is recognized on the transmit XGMII, at least one Primitive Sequence Ordered Set will be sent. If a different Primitive Sequence Ordered Set is received, that Ordered Set is substituted for the previous one, and Primitive Sequence transmission continues. A continuous stream of ||Q|| on XGMII will result in a XAUI stream where ||Q|| is only transmitted after an ||A|| and ||Q|| is always followed by an ||R|| or ||K|| at the transmitter.

If ||Q|| was detected on the XGMII transmit data path while the Transmit Source State Diagram is in the SEND_DATA state, Q_det would be set and either the SEND_A or SEND_K states would be entered depending on the value of A_CNT or whether an ||A|| was sent when SEND_DATA state was last exited. If ||Q|| occurred while not in the SEND_DATA state, random ||K|| or ||R|| would be sent until the next occurrence of ||A||. If ||Q|| is sent after ||A||, Q_det is reset. If some character other than ||IDLE|| or ||Q|| occurs when ||Q|| is to be sent, that character is encoded in the SEND_DATA state and Q_det is not reset. ||Q|| is always transmitted immediately after ||A||.

The mixing of ||Q|| and any other ordered set like ||P|| is handled by the state diagram as described above. The mixing ||Q|| and ||P|| requires ||Q|| to be repeated to ensure it is correctly received. ||P|| shall not be transmitted during ||Q|| for 10GFC. See 9.8.6 and 9.8.7 for more 10GFC requirements.

D.3.6 Idle pattern ||I|| generation

D.3.6.1 General

XGMII Idle Primitives ||IDLE|| (k07 - k07 - k07 - k07) are translated to columns of ||A||, ||R||, and ||K|| when sent to the 8B/10B PCS. The ||A||, ||R||, and ||K|| columns are randomized in order to reduce EMI emissions. The rules of transmission follow those specified in 10GbE: ISO/IEC 8802-3. Nevertheless, some side effects are noted in this subclause for convenience.

D.3.6.2 ||A|| generation and transmission

The ||A|| column follows the insertion rule of between 17 and 32 columns apart. There are a minimum of 16 columns between each /A/. A random value (A_CNT) is loaded when the ||A|| is transmitted, and

Copyright International Organization for Standardization
Reproduced by IHS under license with ISO
No reproduction or networking permitted without license from IHS Not for Resale

decremented to zero, at which time another ||A|| is transmitted when allowed by the PCS transmit source state diagram. An example is shown in table D.1 with a count of 16 loaded the first time and a random count of 16 to 31 is loaded when the next ||A|| is transmitted.

Table D.1 – Idle pattern generation

XGMII (transmit)																							
Lane 0	d	d_c	dt	I	I	I	I	I	I	I	I	I	I	I	I	I	I	I	I	I	I	I	I
Lane 1	d	d_c	dt	I	I	I	I	I	I	I	I	I	I	I	I	I	I	I	I	I	I	I	I
Lane 2	d	d_c	dt	I	I	I	I	I	I	I	I	I	I	I	I	I	I	I	I	I	I	I	I
Lane 3	d	d_c	T	I	I	I	I	I	I	I	I	I	I	I	I	I	I	I	I	I	I	I	I
8B/10B PCS																							
Lane 0	/d/	/d_c/	/dt/	***/A/***	/R/	/K/	/K/	/R/	/R/	/K/	/K/	/K/	/K/	/R/	/R/	/K/	/R/	/K/	/K/	/R/	***/A/***	/R/	/K/
Lane 1	/d/	/d_c/	/dt/	***/A/***	/R/	/K/	/K/	/R/	/R/	/K/	/K/	/K/	/K/	/R/	/R/	/K/	/R/	/K/	/K/	/R/	***/A/***	/R/	/K/
Lane 2	/d/	/d_c/	/dt/	***/A/***	/R/	/K/	/K/	/R/	/R/	/K/	/K/	/K/	/K/	/R/	/R/	/K/	/R/	/K/	/K/	/R/	***/A/***	/R/	/K/
Lane 3	/d/	/d_c/	/T/	***/A/***	/R/	/K/	/K/	/R/	/R/	/K/	/K/	/K/	/K/	/R/	/R/	/K/	/R/	/K/	/K/	/R/	***/A/***	/R/	/K/
A_CNT	x	x	0	16	15	14	13	12	11	10	9	8	7	6	5	4	3	2	1	0	N	N-1	N-2

The ||A|| is transmitted as the first column after a Frame or Primitive Signal only if A_CNT is zero and a ||A|| was not transmitted after the last Frame or ||P||. If A_CNT is non-zero, a ||K|| column will be transmitted.

D.4 PCS receive state diagram

D.4.1 General

The PCS Receive State Diagram in 10GbE: ISO/IEC 8802-3 benefits from additional explanation below.

A RESET signal or the four lane PCS receivers not aligned forces the LOCAL_FAULT_INDICATE state to be executed and ||LF|| on the XGMII receive data path.

When the RESET signal is false and the PCS lanes aligned, PCS data is received in either the DATA_MODE or IDLE_MODE states. The RECEIVE block connects these two states in zero time.

When either ||A||, ||K|| or ||R| is received on the 8B/10B PCS, the XGMII receive data path will receive an ||IDLE|| (k07 - k07 - k07 - k07) in the IDLE_MODE state.

When anything other that ||I|| is received on the 8B/10B PCS, the XGMII receive data path will receive the decoded value.

D.4.2 Reception Error

Characters received with disparity errors or code violations are replaced with /E/ in the same lane and same column in which the error is detected. Any propagated running disparity error is always terminated upon reception of a valid special character (K-character). Once generated, an /E/ is forwarded to the XGMII receive path. A description of the check_end function in 10GbE: ISO/IEC 8802-3 that is relevant to 10GFC operation follows:

a) The purpose of check-end is to enhance the error detection capability of the DECODE function to indicate /E/ if a running disparity error was propagated to any Idle code-groups in ||T|| for 10GbE: ISO/IEC 8802-3, or to the column following ||T||;

Copyright International Organization for Standardization
Reproduced by IHS under license with ISO
No reproduction or networking permitted without license from IHS Not for Resale

b) /E/ replaces the character in ||T|| in Lanes 0, 1 and 2 in every lane for which a running disparity error is propagated to and terminated by the column following ||T||;

c) /E/ replaces the character in ||T|| in Lanes 0, 1 and 2 in every lane for which the column after ||T|| is not /A/ or /K/;

d) It is recommended the check_end be extended in the future to be used by 10GFC to enhance the error detection of the DECODE function following a ||P|| or ||Q|| in the same manner described above for ||T||. A disparity error within the data portion of ||P|| or ||Q|| does not invalidate the primitive currently.

D.4.3 Primitive sequence ||Q|| and primitive signal ||P|| reception

Either a ||P|| or ||Q|| is decoded while in the DATA_MODE. Receiving a ||T|| does not change the state, only an ||IDLE|| does. The example in table D.2 shows the transmission of two R_RDY Primitive Signals (K28.2 - D21.4 - D10.2 - D10.2).

Table D.2 – Primitive signal transmission

XGMII (transmit)																				
Lane 0	d	d_c	dt	I	I	K28.2	I	I	K28.2	I	I	I	I	I	I	I	I	I	I	...
Lane 1	d	d_c	dt	I	I	D21.4	I	I	D21.4	I	I	I	I	I	I	I	I	I	I	...
Lane 2	d	d_c	dt	I	I	D10.2	I	I	D10.2	I	I	I	I	I	I	I	I	I	I	...
Lane 3	d	d_c	T	I	I	D10.2	I	I	D10.2	I	I	I	I	I	I	I	I	I	I	...
8B/10B PCS																				
Lane 0	/d/	/d_c/	/dt/	/A/	/R/	/K28.2/	/K/	/R/	/K28.2/	/K/	/R/	/K/	/K/	/R/	/K/	/R/	/R/	/K/	/K/	...
Lane 1	/d/	/d_c/	/dt/	/A/	/R/	/D21.4/	/K/	/R/	/D21.4/	/K/	/R/	/K/	/K/	/R/	/K/	/R/	/R/	/K/	/K/	...
Lane 2	/d/	/d_c/	/dt/	/A/	/R/	/D10.2/	/K/	/R/	/D10.2/	/K/	/R/	/K/	/K/	/R/	/K/	/R/	/R/	/K/	/K/	...
Lane 3	/d/	/d_c/	/T/	/A/	/R/	/D10.2/	/K/	/R/	/D10.2/	/K/	/R/	/K/	/K/	/R/	/K/	/R/	/R/	/K/	/K/	...
XGMII (receive)																				
Lane 0	d	d_c	dt	I	I	K28.2	I	I	K28.2	I	I	I	I	I	I	I	I	I	I	...
Lane 1	d	d_c	dt	I	I	D21.4	I	I	D21.4	I	I	I	I	I	I	I	I	I	I	...
Lane 2	d	d_c	dt	I	I	D10.2	I	I	D10.2	I	I	I	I	I	I	I	I	I	I	...
Lane 3	d	d_c	T	I	I	D10.2	I	I	D10.2	I	I	I	I	I	I	I	I	I	I	...

The example in table D.3 shows the result of a IFG of eight columns and two R_RDY's and a minimum frame with Idles having been removed due to XGMII and PCS translations.

NOTE ||P|| followed immediately by another ||P|| will only occur on XGMII if the 10GFC rules are not followed but may occur at FC-2 if the Idle between ||P|| is deleted above XGMII.

Copyright International Organization for Standardization
Reproduced by IHS under license with ISO
No reproduction or networking permitted without license from IHS
Not for Resale

Table D.3 – Short inter-frame gap

XGMII (transmit)																												
Lane 0	d	d_c	E	I	R	I	R	I	S	d	d	d	d	d	d	d	E	I	I	R	I	I	R	I	I	S	d	...
Lane 1	d	d_c	O	I	R	I	R	I	O	d	d	d	d	d	d	d	O	I	I	R	I	I	R	I	I	O	d	...
Lane 2	d	d_c	F	I	D	I	D	I	F	d	d	d	d	d	d	d	F	I	I	D	I	I	D	I	I	F	d	...
Lane 3	d	d_c	x	I	Y	I	Y	I	x	d	d	d	d	d	d	d	x	I	I	Y	I	I	Y	I	I	x	d	...
8B/10B PCS																												
Lane 0	d	d_c	**d**	A	R	K	R	K	**S**	d	d	d	d	d	d	d	**d**	K	R	R	K	R	R	K	R	**S**	d	...
Lane 1	d	d_c	**d**	A	R	K	R	K	**d**	d	d	d	d	d	d	d	**d**	K	R	R	K	R	R	K	R	**d**	d	...
Lane 2	d	d_c	**d**	A	D	K	D	K	**d**	d	d	d	d	d	d	d	**d**	K	R	D	K	R	D	K	R	**d**	d	...
Lane 3	d	d_c	**T**	A	Y	K	Y	K	**d**	d	d	d	d	d	d	d	**T**	K	R	Y	K	R	Y	K	R	**d**	d	...
XGMII (receive)																												
Lane 0	d	d_c	E	I	R	I	R	I	S	d	d	d	d	d	d	d	E	I	I	R	I	I	R	I	I	S	d	...
Lane 1	d	d_c	O	I	R	I	R	I	O	d	d	d	d	d	d	d	O	I	I	R	I	I	R	I	I	O	d	...
Lane 2	d	d_c	F	I	D	I	D	I	F	d	d	d	d	d	d	d	F	I	I	D	I	I	D	I	I	F	d	...
Lane 3	d	d_c	x	I	Y	I	Y	I	x	d	d	d	d	d	d	d	x	I	I	Y	I	I	Y	I	I	x	d	...
columns:					**1**	**2**	3	4	5	6	7	8	9	10	11	12	13	14	15	**16**	17	18	**19**	20	21	22		

Tables D.4 through D.7 illustrate some common Primitive Sequence scenarios. The examples use Fibre Channel Primitive Sequences OLS (K28.4 - D21.1 - D10.4 - D21.2), LR (K28.4 - D09.2 - D31.5 - D09.2), and LRR (K28.4 - D21.1 - D31.5 - D09.2).

Table D.4 – 8B/10B primitive sequence start

XGMII (transmit)																					
Lane 0	d	d_c	dt	I	I	...	I	I	O	O	O	O	O	O	O	K28.4	O	O	O	O	...
Lane 1	d	d_c	dt	I	I	...	I	I	L	L	L	L	L	L	L	D21.1	L	L	L	L	...
Lane 2	d	d_c	dt	I	I	...	I	I	S	S	S	S	S	S	S	D10.4	S	S	S	S	...
Lane 3	d	d_c	T	I	I	...	I	I								D21.2					...
8B/10B PCS																					
Lane 0	/d/	/d_c/	/dt/	***/A/***	/R/	...	/K/	/R/	/K/	/R/	/R/	/K/	/R/	/K/	***/A/***	/K28.4/	/R/	/K/	/K/	/R/	...
Lane 1	/d/	/d_c/	/dt/	***/A/***	/R/	...	/K/	/R/	/K/	/R/	/R/	/K/	/R/	/K/	***/A/***	/D21.1/	/R/	/K/	/K/	/R/	...
Lane 2	/d/	/d_c/	/dt/	***/A/***	/R/	...	/K/	/R/	/K/	/R/	/R/	/K/	/R/	/K/	***/A/***	/D10.4/	/R/	/K/	/K/	/R/	...
Lane 3	/d/	/d_c/	/T/	***/A/***	/R/	...	/K/	/R/	/K/	/R/	/R/	/K/	/R/	/K/	***/A/***	/D21.2/	/R/	/K/	/K/	/R/	...
XGMII (receive)																					
Lane 0	d	d_c	dt	I	I	...	I	I	I	I	I	I	I	I	I	K28.4	I	I	I	I	...
Lane 1	d	d_c	dt	I	I	...	I	I	I	I	I	I	I	I	I	D21.1	I	I	I	I	...
Lane 2	d	d_c	dt	I	I	...	I	I	I	I	I	I	I	I	I	D10.4	I	I	I	I	...
Lane 3	d	d_c	T	I	I	...	I	I	I	I	I	I	I	I	I	D21.2	I	I	I	I	...

Copyright International Organization for Standardization
Reproduced by IHS under license with ISO
No reproduction or networking permitted without license from IHS
Not for Resale

Table D.5 – 8B/10B continuing primitive sequence

XGMII (transmit)																				
Lane 0	O	O	O	O	K28.4	O	O	O	O	O	...	O	O	O	O	K28.4	O	O	O	O	...
Lane 1	L	L	L	L	D21.1	L	L	L	L	L	...	L	L	L	L	D21.1	L	L	L	L	...
Lane 2	S	S	S	S	D10.4	S	S	S	S	S	...	S	S	S	S	D10.4	S	S	S	S	...
Lane 3					D21.2						...					D21.2					...
8B/10B PCS																				
Lane 0	/K/	/R/	/K/	**/A/**	/K28.4/	/R/	/K/	/R/	/R/	/K/	...	/R/	/K/	/R/	**/A/**	/K28.4/	/R/	/K/	/R/	/K/	...
Lane 1	/K/	/R/	/K/	**/A/**	/D21.1/	/R/	/K/	/R/	/R/	/K/	...	/R/	/K/	/R/	**/A/**	/D21.1/	/R/	/K/	/R/	/K/	...
Lane 2	/K/	/R/	/K/	**/A/**	/D10.4/	/R/	/K/	/R/	/R/	/K/	...	/R/	/K/	/R/	**/A/**	/D10.4/	/R/	/K/	/R/	/K/	...
Lane 3	/K/	/R/	/K/	**/A/**	/D21.2/	/R/	/K/	/R/	/R/	/K/	...	/R/	/K/	/R/	**/A/**	/D21.2/	/R/	/K/	/R/	/K/	...
XGMII (receive)																				
Lane 0	I	I	I	I	K28.4	I	I	I	I	I	...	I	I	I	I	K28.4	I	I	I	I	...
Lane 1	I	I	I	I	D21.1	I	I	I	I	I	...	I	I	I	I	D21.1	I	I	I	I	...
Lane 2	I	I	I	I	D10.4	I	I	I	I	I	...	I	I	I	I	D10.4	I	I	I	I	...
Lane 3	I	I	I	I	D21.2	I	I	I	I	I	...	I	I	I	I	D21.2	I	I	I	I	...

Table D.6 – 8B/10B changing primitive sequence

XGMII (transmit)																				
Lane 0	O	O	O	K28.4	O	O	O	L	L	L	L	...	L	L	L	K28.4	L	L	L	...
Lane 1	L	L	L	D21.1	L	L	L	R	R	R	R	...	R	R	R	D09.2	R	R	R	...
Lane 2	S	S	S	D10.4	S	S	S					...				D31.5				...
Lane 3				D21.2								...				D09.2				...
8B/10B PCS																				
Lane 0	/R/	/K/	**/A/**	/K28.4/	/R/	/K/	/R/	/R/	/K/	/R/	/K/	...	/K/	/R/	**/A/**	/K28.4/	/R/	/R/	/K/	...
Lane 1	/R/	/K/	**/A/**	/D21.1/	/R/	/K/	/R/	/R/	/K/	/R/	/K/	...	/K/	/R/	**/A/**	/D09.2/	/R/	/R/	/K/	...
Lane 2	/R/	/K/	**/A/**	/D10.4/	/R/	/K/	/R/	/R/	/K/	/R/	/K/	...	/K/	/R/	**/A/**	/D31.5/	/R/	/R/	/K/	...
Lane 3	/R/	/K/	**/A/**	/D21.2/	/R/	/K/	/R/	/R/	/K/	/R/	/K/	...	/K/	/R/	**/A/**	/D09.2/	/R/	/R/	/K/	...
XGMII (receive)																				
Lane 0	I	I	I	K28.4	I	I	I	I	I	I	I	...	I	I	I	K28.4	I	I	I	...
Lane 1	I	I	I	D21.1	I	I	I	I	I	I	I	...	I	I	I	D09.2	I	I	I	...
Lane 2	I	I	I	D10.4	I	I	I	I	I	I	I	...	I	I	I	D31.5	I	I	I	...
Lane 3	I	I	I	D21.2	I	I	I	I	I	I	I	...	I	I	I	D09.2	I	I	I	...

--`,,```,,,,````-`-`,,`,,`,`,,`---

Copyright International Organization for Standardization
Reproduced by IHS under license with ISO
No reproduction or networking permitted without license from IHS

Not for Resale

Table D.7 – 8B/10B ending primitive sequence

XGMII (transmit)																						
Lane 0	L	L	I	I	/k07/	I	I	I	I	I	I	I	I	...	I	I	I	I	I	I	I	...
Lane 1	R	R	I	I	/k07/	I	I	I	I	I	I	I	I	...	I	I	I	I	I	I	I	...
Lane 2	R	R	I	I	/k07/	I	I	I	I	I	I	I	I	...	I	I	I	I	I	I	I	...
Lane 3			I	I	/k07/	I	I	I	I	I	I	I	I	...	I	I	I	I	I	I	I	...
8B/10B PCS																						
Lane 0	/K/	/R/	/K/	**/A/**	/K28.4/	/R/	/K/	/R/	/K/	/R/	/K/	/R/	/K/	...	/R/	/K/	/R/	**/A/**	/R/	/K/	/K/	...
Lane 1	/K/	/R/	/K/	**/A/**	/D21.1/	/R/	/K/	/R/	/K/	/R/	/K/	/R/	/K/	...	/R/	/K/	/R/	**/A/**	/R/	/K/	/K/	...
Lane 2	/K/	/R/	/K/	**/A/**	/D31.5/	/R/	/K/	/R/	/K/	/R/	/K/	/R/	/K/	...	/R/	/K/	/R/	**/A/**	/R/	/K/	/K/	...
Lane 3	/K/	/R/	/K/	**/A/**	/D09.2/	/R/	/K/	/R/	/K/	/R/	/K/	/R/	/K/	...	/R/	/K/	/R/	**/A/**	/R/	/K/	/K/	...
XGMII (receive)																						
Lane 0	I	I	I	I	/K28.4/	I	I	I	I	I	I	I	I	...	I	I	I	I	I	I	I	...
Lane 1	I	I	I	I	/D21.1/	I	I	I	I	I	I	I	I	...	I	I	I	I	I	I	I	...
Lane 2	I	I	I	I	/D31.5/	I	I	I	I	I	I	I	I	...	I	I	I	I	I	I	I	...
Lane 3	I	I	I	I	/D09.2/	I	I	I	I	I	I	I	I	...	I	I	I	I	I	I	I	...

D.4.4 Idle pattern reception

When ||A||, ||R||, or ||K|| is received from 8B/10B PCS, it is translated to an Idle (k07 - k07 - k07 - k07) on the XGMII Receive interface. A Primitive Signal (||P||) or Primitive Sequence (||Q||) may be embedded in the Idle stream. These are decoded column by column and passed on the XGMII interface.

With multiple minimum frames and IFG, it is possible that the ||A|| is not included within an IFG. An EOF will normally be followed by a ||K|| column when there are less than 17 columns since the last ||A||. The placement of the ||A|| will depend on randomization, when the last ||A|| was sent and the actual number of idles between frames, which can vary based on clock frequency mismatch. An example is shown in table D.8. Also ||K|| is sent after ||T|| if ||A|| was sent after the previous ||T||, even if A_CNT= 0 at ||T||.

Table D.8 – Minimal frame idle pattern generation

XGMII (transmit)																										
Lane 0	S	d	d	d	d	d	d	d_c	E	I	I	I	I	I	I	S	d	d	d	d	d	d	d	E	I	I	I	...
Lane 1	O	d	d	d	d	d	d	d_c	O	I	I	I	I	I	I	O	d	d	d	d	d	d	d	O	I	I	I	...
Lane 2	F	d	d	d	d	d	d	d_c	F	I	I	I	I	I	I	F	d	d	d	d	d	d	d	F	I	I	I	...
Lane 3	x	d	d	d	d	d	d	d_c	x	I	I	I	I	I	I	x	d	d	d	d	d	d	d	x	I	I	I	...
8B/10B PCS																										
Lane 0	**S**	d	d	d	d	d	d	d_c	**d**	A	R	K	K	R	R	**S**	d	d	d	d	d	d	d	**d**	K	R	A	R
Lane 1	**d**	d	d	d	d	d	d	d_c	**d**	A	R	K	K	R	R	**d**	d	d	d	d	d	d	d	**d**	K	R	A	R
Lane 2	**d**	d	d	d	d	d	d	d_c	**d**	A	R	K	K	R	R	**d**	d	d	d	d	d	d	d	**d**	K	R	A	R
Lane 3	**d**	d	d	d	d	d	d	d_c	**T**	A	R	K	K	R	R	**d**	d	d	d	d	d	d	d	**T**	K	R	A	R
A_CNT	x	x	x	x	x	x	x	x	0	16	15	14	13	12	11	10	9	8	7	6	5	4	3	2	1	0	N	N-1

Copyright International Organization for Standardization
Reproduced by IHS under license with ISO
No reproduction or networking permitted without license from IHS
Not for Resale

Annex E
(normative)

XAUI and 8B/10B PCS test patterns

E.1 general

This annex defines test patterns which allow testing of the PMDs associated with clause 12 or the XAUI interface described in clause 11 for compliance in a system environment, or for unspecified diagnostic purposes. The patterns may be implemented at a bit, code-group or frame level and may be used for transmitter testing. The receiver may not have the capability to accept these diagnostic sequences, however, system debug can be improved if a receiver is able to test for one or more of these patterns and report bit errors (e.g. 8B/10B decoder errors) back to the user.

E.2 High frequency test pattern

The intent of this test pattern is to test random jitter (RJ) at a BER of 10^{-12}, and also to test the asymmetry of transition times. This pattern is not intended for jitter compliance testing. This high frequency test pattern generates a one, or light on, for a duration of 1 bit time, followed by a zero, or light off, for a duration of 1 bit time. This pattern repeats continuously on each lane for the duration of the test. For example: 10101010101010101010101010101010101010...

NOTE This pattern can be generated by the repeated transmission of the D21.5 code-group on each lane. Disparity rules are followed.

E.3 Low frequency test pattern

The intent of this test pattern is to test low frequency RJ and also to test PLL tracking error. This pattern is not intended for jitter compliance testing. This low frequency test pattern generates a one, or light on, for a duration of 5 bit times, followed by a zero, or light off, for a duration of 5 bit times. This pattern repeats continuously on each lane for the duration of the test. For example: 11111000001111100000111110000011111000000...

NOTE This pattern can be generated by the repeated transmission of the K28.7 code-group on each lane. Disparity rules are followed.

E.4 Mixed frequency test pattern

The intent of this test pattern is to test the combination of RJ and deterministic jitter (DJ) due to high frequency ISI. This pattern is not intended for jitter compliance testing. This mixed frequency test pattern generates a one, or light on, for a duration of 5 bit times, followed by a zero, or light off, for a duration of 1 bit times, followed by a one for 1 bit time followed by a zero for 1 bit time followed by a one for 2 bit times followed by a zero for 5 bit times followed by a one for 1 bit time followed by a zero for 1 bit time followed by a one for 1 bit time followed by a zero for 2 bit times. This pattern repeats continuously on each lane for the duration of the test. For example: 11111010110000010100111110101100000101000...

NOTE This pattern can be generated by the repeated transmission of the K28.5 code-group on each lane. Disparity rules are followed.

E.5 Continuous jitter test pattern (CJPAT)

The continuous jitter test pattern is intended to expose a receiver's CDR to large instantaneous phase jumps. The pattern alternates repeating low transition density patterns with repeating high transition density patterns. The repeating code-group durations should be longer than the time constants in the receiver clock recovery circuit. This assures that the clock phase has followed the systematic pattern jitter

Copyright International Organization for Standardization
Reproduced by IHS under license with ISO
No reproduction or networking permitted without license from IHS Not for Resale

and the data sampling circuitry is exposed to large systematic phase jumps. This stresses the timing margins in the received eye. The following pattern is intended for receive jitter compliance testing.

NOTE The basis of this pattern may be found in INCITS TR-25:1999, “Methodology of Jitter Specification”. This Annex uses similar modifications to fit the JTPAT test pattern into an 802.3 frame.

The continuous jitter test pattern consists of a continuous stream of identical frames, separated by a minimum Inter Frame Gap (IFG). Each frame is encapsulated within delimiters as specified in clause 9 in the ordinary way. The contents of each frame is composed of the following octet sequences, as observed at the XGMII, before 8B/10B coding.

Each frame in the continuous jitter test pattern consists of four SOF characters, followed by 1504 data characters, four CRC characters, four EOF characters, followed by a minimum IFG of 24 Idle characters. The frame format is specified in table E.1.

Table E.1 depicts 10-bit encodings for CJPAT. This is the encoding which will occur when each lane has negative disparity before the Start column. The actual 10-bit encoding sent when CJPAT is transmitted will be one of 16 encodings depending upon the disparity of each lane at the beginning of the packet. CJPAT has been designed to produce the same disparity on each lane after the Terminate column as that lane had before the Start column. When CJPAT is sent continuously, two of the sixteen possible encodings may occur because Idle may either leave the disparity the same or flip the disparity on all lanes.

Copyright International Organization for Standardization
Reproduced by IHS under license with ISO
No reproduction or networking permitted without license from IHS Not for Resale

Table E.1 – Continuous jitter test pattern (CJPAT) frame format

Lane 3			Lane 2			Lane 1			Lane 0			# of repeats	Content
36	D22.1	0110101001	36	D22.1	0110101001	B5	D21.5	1010101010	S	K27.7	1101101000	1	SOF
7E	D30.3	0111100011	7E	D30.3	0111100011	7E	D30.3	0111100011	0B	D11.0	1101001011	1	PAYLOAD
7E	D30.3	1000011100	7E	D30.3	1000011100	7E	D30.3	1000011100	7E	D30.3	1000011100	1	
7E	D30.3	0111100011	7E	D30.3	0111100011	7E	D30.3	0111100011	7E	D30.3	0111100011	65	
7E	D30.3	1000011100	7E	D30.3	1000011100	7E	D30.3	1000011100	7E	D30.3	1000011100		
F4	D20.7	0010110111	F4	D20.7	0010110111	F4	D20.7	0010110111	F4	D20.7	0010110111	1	
EB	D11.7	1101001000	EB	D11.7	1101001000	EB	D11.7	1101001000	EB	D11.7	1101001000	1	
F4	D20.7	0010110111	F4	D20.7	0010110111	F4	D20.7	0010110111	F4	D20.7	0010110111	1	
EB	D11.7	1101001000	EB	D11.7	1101001000	EB	D11.7	1101001000	EB	D11.7	1101001000	1	
F4	D20.7	0010110111	F4	D20.7	0010110111	F4	D20.7	0010110111	F4	D20.7	0010110111	1	
EB	D11.7	1101001000	EB	D11.7	1101001000	EB	D11.7	1101001000	EB	D11.7	1101001000	1	
F4	D20.7	0010110111	F4	D20.7	0010110111	F4	D20.7	0010110111	F4	D20.7	0010110111	1	
AB	D11.5	1101001010	AB	D11.5	1101001010	AB	D11.5	1101001010	AB	D11.5	1101001010	1	
B5	D21.5	1010101010	B5	D21.5	1010101010	B5	D21.5	1010101010	B5	D21.5	1010101010	40	
EB	D11.7	1101001000	EB	D11.7	1101001000	EB	D11.7	1101001000	EB	D11.7	1101001000	1	
F4	D20.7	0010110111	F4	D20.7	0010110111	F4	D20.7	0010110111	F4	D20.7	0010110111	1	
EB	D11.7	1101001000	EB	D11.7	1101001000	EB	D11.7	1101001000	EB	D11.7	1101001000	1	
F4	D20.7	0010110111	F4	D20.7	0010110111	F4	D20.7	0010110111	F4	D20.7	0010110111	1	
EB	D11.7	1101001000	EB	D11.7	1101001000	EB	D11.7	1101001000	EB	D11.7	1101001000	1	
F4	D20.7	0010110111	F4	D20.7	0010110111	F4	D20.7	0010110111	F4	D20.7	0010110111	1	
EB	D11.7	1101001000	EB	D11.7	1101001000	EB	D11.7	1101001000	EB	D11.7	1101001000	1	
F4	D20.7	0010110111	F4	D20.7	0010110111	F4	D20.7	0010110111	F4	D20.7	0010110111	1	
7E	D30.3	1000011100	7E	D30.3	1000011100	7E	D30.3	1000011100	7E	D30.3	1000011100	66	
7E	D30.3	0111100011	7E	D30.3	0111100011	7E	D30.3	0111100011	7E	D30.3	0111100011		
F4	D20.7	0010110001	F4	D20.7	0010110001	F4	D20.7	0010110001	F4	D20.7	0010110001	1	
EB	D11.7	1101001110	EB	D11.7	1101001110	EB	D11.7	1101001110	EB	D11.7	1101001110	1	
F4	D20.7	0010110001	F4	D20.7	0010110001	F4	D20.7	0010110001	F4	D20.7	0010110001	1	
EB	D11.7	1101001110	EB	D11.7	1101001110	EB	D11.7	1101001110	EB	D11.7	1101001110	1	
F4	D20.7	0010110001	F4	D20.7	0010110001	F4	D20.7	0010110001	F4	D20.7	0010110001	1	
EB	D11.7	1101001110	EB	D11.7	1101001110	EB	D11.7	1101001110	EB	D11.7	1101001110	1	
F4	D20.7	0010110001	F4	D20.7	0010110001	F4	D20.7	0010110001	F4	D20.7	0010110001	1	
AB	D11.5	1101001010	AB	D11.5	1101001010	AB	D11.5	1101001010	AB	D11.5	1101001010	1	
B5	D21.5	1010101010	B5	D21.5	1010101010	B5	D21.5	1010101010	B5	D21.5	1010101010	40	
EB	D11.7	1101001110	EB	D11.7	1101001110	EB	D11.7	1101001110	EB	D11.7	1101001110	1	
F4	D20.7	0010110001	F4	D20.7	0010110001	F4	D20.7	0010110001	F4	D20.7	0010110001	1	
EB	D11.7	1101001110	EB	D11.7	1101001110	EB	D11.7	1101001110	EB	D11.7	1101001110	1	
F4	D20.7	0010110001	F4	D20.7	0010110001	F4	D20.7	0010110001	F4	D20.7	0010110001	1	
EB	D11.7	1101001110	EB	D11.7	1101001110	EB	D11.7	1101001110	EB	D11.7	1101001110	1	
F4	D20.7	0010110001	F4	D20.7	0010110001	F4	D20.7	0010110001	F4	D20.7	0010110001	1	
AB	D11.5	1101001010	1E	D30.0	0111100100	9F	D31.4	1010110010	BD	D29.5	1011101010	1	CRC
T	K29.7	1011101000	D5	D21.6	1010100110	D5	D21.6	1010100110	95	D21.4	1010100010	1	EOF
A	K28.3	0011110011	A	K28.3	0011110011	A	K28.3	0011110011	A	K28.3	0011110011	1	IDLE
R	K28.0	1100001011	R	K28.0	1100001011	R	K28.0	1100001011	R	K28.0	1100001011	1	
K	K28.5	1100000101	K	K28.5	1100000101	K	K28.5	1100000101	K	K28.5	1100000101	1	
K	K28.5	0011111010	K	K28.5	0011111010	K	K28.5	0011111010	K	K28.5	0011111010	1	
K	K28.5	1100000101	K	K28.5	1100000101	K	K28.5	1100000101	K	K28.5	1100000101	1	
R	K28.0	0011110100	R	K28.0	0011110100	R	K28.0	0011110100	R	K28.0	0011110100	1	

--`,,```,,,,````-`-`,,`,,`,`,,`---

Copyright International Organization for Standardization
Reproduced by IHS under license with ISO
No reproduction or networking permitted without license from IHS Not for Resale

Bibliography

ISO/IEC 14165-114, *Information technology - Fibre Channel – Part 114: 100 MB/s copper physical interface (FC-100-DF-EL-S)*

ISO/IEC 14165-115 (under development), *Information technology - Fibre Channel - Part 115: Physical Interfaces (FC-PI)*

ISO/IEC TR 14165-117 (under development), *Information technology - Fibre Channel - Part 117 - Fibre Channel - Methodologies for Jitter and Signal Quality Specification, - MJSQ*

ISO/IEC 14165-122, *Information technology - Fibre Channel - Part 122: Arbitrated Loop-2 (FC-AL-2)*

ISO/IEC 14165-131, *Information technology - Fibre Channel - Part 131: Switch Fabric Requirements (FC-SW)*

ISO/IEC 14165-133 (under development), *Information technology - Fibre Channel - Part 133 - Switch Fabric-3 (FC-SW-3)*

ISO/IEC 14165-141, Information technology - *Fibre Channel - Part 131: Switch Generic Requirements (FC-FG)*

ISO/IEC 14165-211, Information technology - *FC-FP (Fibre Channel) – Part 211: Mapping to HIPPI-FP (FC-FP)*

ISO/IEC 14165-222, Information technology - *Fibre Channel – Part 222: Single-Byte Command Sets-2 Mapping Protocol (FC-SB-2)*

ISO/IEC 14165-241, *Information technology - Fibre Channel - Part 241: Back Bone (FC-BB-2)*

ISO/IEC 14165-251 (under development), *Information technology - Fibre Channel - Part 251 - Framing and Signalling (FC-FS)*

ISO/IEC 14165-321 (under development), *Information technology - Fibre Channel - Part 321: Audio-Video*

ISO/IEC 14165-331 (under development), *Information technology - Fibre Channel - Part 331: Virtual Interface (FC-VI)*

ISO/IEC 14165-414 (under development), *Information technology - Fibre Channel - Part 414: Generic Services-4 (FC-GS-4)*

ITU-T Recommendation G.957:1995, *Optical interfaces for equipments and systems relating to the synchronous digital hierarchy (SDH).*

ITU-T Recommendation O.172:1999, *Jitter and wander measuring equipment for digital systems which are based on the synchronous digital hierarchy (SDH).*

T11/Project 1506-D/Rev 3, *Fibre Channel - Physical Interfaces (FC-PI-2)*.

ANSI INCITS 230-1994 (1999), *Information Technology - Fibre Channel Physical and Signaling Interface (FC-PH).*

ANSI T1.416-1999, *Telecommunications - Network-to-Customer Installation Interfaces - Synchronous Optical Network (SONET) Physical Media Dependent Specification - Electrical.*

ANSI T1.269-2000, *Telecommunications - Information Interchange - Structure and Representation of Trace Message formats for the North American Telecommunications System.*

ANSI T1.105-1995, *Telecommunications - Synchronous Optical Network (SONET) - Basic Description including Multiplex Structure, Rates and Formats.*

Copyright International Organization for Standardization
Reproduced by IHS under license with ISO
No reproduction or networking permitted without license from IHS Not for Resale

EIA/JEDEC Standard EIA/JESD8-6, *High Speed Transceiver Logic (HSTL),* August 1995.

INCITS/TR-25:1999, *Fibre Channel Methodologies for Jitter Specification.*

--`,,```,,,,````-`-`,,`,,`,`,,`---

Copyright International Organization for Standardization
Reproduced by IHS under license with ISO
No reproduction or networking permitted without license from IHS Not for Resale

ISBN 2-8318-9192-7



ICS 35.200

Typeset and printed by the IEC Central Office
GENEVA, SWITZERLAND

Copyright International Organization for Standardization
Reproduced by IHS under license with ISO
No reproduction or networking permitted without license from IHS

Not for Resale