INTERNATIONAL STANDARD

ISO/IEC 14165-115

First edition
2006-02

Information technology –
Fibre channel –

Part 115:
Physical interfaces (FC-PI)



Reference number
ISO/IEC 14165-115:2006(E)

--`,,```,,,,````-`-`,,`,,`,`,,`---

Copyright International Organization for Standardization
Provided by IHS under license with ISO
No reproduction or networking permitted without license from IHS

Not for Resale

--`,,```,,,,````-`-`,,`,,`,`,,`---

Copyright International Organization for Standardization
Provided by IHS under license with ISO
No reproduction or networking permitted without license from IHS
Not for Resale

INTERNATIONAL STANDARD

ISO/IEC 14165-115

First edition
2006-02

Information technology –
Fibre channel –

Part 115:
Physical interfaces (FC-PI)

Copyright © 2006 ISO/IEC, Geneva — All rights reserved

No part of this publication may be reproduced or utilized in any form or by any means, electronic or mechanical, including photocopying and microfilm, without permission in writing from the publisher.

International Electrotechnical Commission, 3, rue de Varembé, PO Box 131, CH-1211 Geneva 20, Switzerland
Telephone: +41 22 919 02 11 Telefax: +41 22 919 03 00 E-mail: inmail@iec.ch Web: www.iec.ch



PRICE CODE X

For price, see current catalogue

Copyright International Organization for Standardization
Provided by IHS under license with ISO
No reproduction or networking permitted without license from IHS

Not for Resale

Copyright International Organization for Standardization
Provided by IHS under license with ISO
No reproduction or networking permitted without license from IHS
Not for Resale

Contents

FOREWORD 8
INTRODUCTION 9

1 Scope ... **11**

2 Normative references ... **11**
2.1 Overview ... 11
2.2 International Standards ... 11
2.3 Other references ... 12

3 Definitions and conventions ... **13**
3.1 Definitions ... 13
3.2 Editorial conventions ... 20
3.2.1 Abbreviations, acronyms and symbols ... 21
3.2.2 signaling rate abbreviations ... 21
3.2.3 Synonyms ... 21
3.2.4 Acronyms and other abbreviations ... 22
3.3 Symbols ... 23

4 Structure and concepts ... **24**
4.1 General ... 24
4.2 FC-0 general description ... 25
4.3 FC-0 interface overview ... 27
4.4 Data flow stages ... 28

5 FC-PI functional characteristics ... **29**
5.1 General ... 29
5.2 General characteristics ... 29
5.3 FC-0 States ... 30
5.3.1 Transmitter FC-0 states ... 30
5.3.2 Receiver States ... 30
5.4 Response to input data phase jumps ... 30
5.5 Limitations on invalid code ... 31
5.6 Receiver initialization time ... 31
5.7 Loss of signal (Rx_LOS) function ... 31
5.8 Speed agile Ports that support Speed Negotiation ... 31
5.9 FC-PI nomenclature ... 32
5.10 Interoperability points ... 32
5.11 FC-PI technology options ... 40

6 Optical interface specification ... **41**
6.1 General ... 41
6.2 Laser safety issues ... 41
6.3 SM data links ... 41
6.3.1 General ... 41
6.3.2 SM optical output interface ... 41
6.3.3 SM optical input interface ... 44
6.3.4 SM jitter budget ... 44
6.3.5 SM trade-offs ... 47
6.4 MM data links ... 49
6.4.1 General ... 49
6.4.2 MM optical output interface ... 49
6.4.3 MM optical input interface ... 53
6.4.4 MM jitter budget ... 53

Copyright International Organization for Standardization
Provided by IHS under license with ISO
No reproduction or networking permitted without license from IHS
Not for Resale

7 Optical interface receptacle specifications **55**
7.1 Optical interface general information 55
7.2 SC optical interface 55
7.2.1 SC performance information 55
7.2.2 SC optical plug 55
7.2.3 SC Duplex optical receptacle 56
7.3 SG optical interface 56
7.4 LC optical interface 57
7.5 MT-RJ optical interface 58
7.6 MU connector 58

8 Optical fibre cable plant specification **59**
8.1 SM cable plant specification 59
8.1.1 SM optical fibre type 59
8.1.2 SM cable plant loss budget 59
8.1.3 SM optical return loss 59
8.2 MM cable plant specification 59
8.2.1 General 59
8.2.2 MM optical fibre types 60
8.2.3 MM modal bandwidth 60
8.2.4 MM cable plant loss budget 60
8.2.5 MM optical return loss 61
8.3 Connectors and splices 61

9 Electrical cable interface specification **62**
9.1 General 62
9.2 Transmitted signal characteristics. 62
9.3 Received signal characteristics 64
9.4 Jitter characteristics 65
9.5 Eye masks 67
9.5.1 General 67
9.5.2 Transmitted eye mask at $\beta_{\mathbf{T}}$, $\delta_{\mathbf{T}}$ and $\gamma_{\mathbf{T}}$. 67
9.5.3 Received eye mask at $\beta_{\mathbf{R}}$, $\delta_{\mathbf{R}}$ and $\gamma_{\mathbf{R}}$. 68
9.5.4 Jitter tolerance masks 68
9.6 Impedance specifications 70
9.7 Electrical TxRx Connections 71
9.8 Compliance points 71
9.9 Driver characteristics 72
9.10 Receiver characteristics 73
9.11 Example TxRx Connections 74

10 Electrical cable plant and connector specifications **75**
10.1 General 75
10.2 Shielding 75
10.3 Cable interoperability 75
10.4 Unbalanced cable connectors 75
10.4.1 Inter-enclosure connectors for unbalanced cable 75
10.4.2 Intra-enclosure connectors for unbalanced cable 76
10.5 Balanced cable connectors 77
10.5.1 General 77
10.5.2 Inter-enclosure connectors for balanced cable 77
10.5.3 Intra-enclosure connectors for balanced cable 79
10.5.4 Non-device inter-enclosure connectors 81

Annex A (informative) **Test methods** **82**

Annex B (informative) **SERDES electrical interface example** **91**

Copyright International Organization for Standardization
Provided by IHS under license with ISO
No reproduction or networking permitted without license from IHS
Not for Resale

Annex C (normative) **Optical cable plant usage** **100**

Annex D (normative) **Tx-Off and Rx-Loss of Signal detection** **102**

Bibliography 106

Copyright International Organization for Standardization
Provided by IHS under license with ISO
No reproduction or networking permitted without license from IHS Not for Resale

Table 1 – ISO/IEC rules 20
Table 2 – Signaling rate abbreviations 21
Table 3 – Acronyms and other abbreviations 22
Table 4 – Symbols 23
Table 5 – FC-PI technology options 40
Table 6 – Single-mode link classes 43
Table 7 – Transmit pulse noise filter 44
Table 8 – Tx Pulse Noise Filter Attenuation Tolerance 44
Table 9 – SM jitter output, peak to peak, max. 45
Table 10 – SM jitter tolerance, peak to peak, min. 46
Table 11 – Multimode 50 μm link classes 50
Table 12 – Multimode 62,5 μm link classes 52
Table 13 – MM jitter output, peak to peak, max. 53
Table 14 – MM jitter tolerance, peak to peak, min. 54
Table 15 – Single-mode cable plant 59
Table 16 – Multimode cable plant 60
Table 17 – Multimode fibre types 60
Table 18 – Multimode OFL bandwidth 60
Table 19 – General electrical characteristics 62
Table 20 – Transmitted signal characteristics at β_T, δ_T and γ_T 63
Table 21 – Delivered signal characteristics to β_R, δ_R and γ_R 64
Table 22 – Jitter output 65
Table 23 – Jitter tolerance 66
Table 24 – FC-PI measured impedance 70
Table 25 – Optional inter-enclosure contact uses 77
Table A.1 – Filter 3 dB point 86
Table C.1 – Worst case (nominal bandwidth) multimode cable link power budget 100
Table C.2 – Alternate (lower bandwidth) multimode cable link power budget 100
Table C.3 – Alternate (higher bandwidth) multimode cable link power budget 101
Table E.1 – Tx-Off timing 103
Table E.2 – Rx-LOS timing 103
Table E.3 – Optical Rx_LOS detection thresholds 104
Table E.4 – Electrical Rx_LOS detection thresholds 104

Copyright International Organization for Standardization
Provided by IHS under license with ISO
No reproduction or networking permitted without license from IHS Not for Resale

Figure 1 – Fibre channel structure 24
Figure 2 – Node functional configuration 25
Figure 3 – FC-0 Link 25
Figure 4 – Fabric 26
Figure 5 – FC-0 Path 26
Figure 6 – Fibre channel building wiring 27
Figure 7 – Data flow stages 28
Figure 8 – FC variant nomenclature 32
Figure 9 – Example of physical location of reference and interoperability points 33
Figure 10 – Use of internal connectors and retimers 34
Figure 11 – Tx interoperability points (examples) 35
Figure 12 – Rx interoperability points (examples) 36
Figure 13 – Hub interoperability points (example) 37
Figure 14 – Examples of interoperability points 38
Figure 15 – Overview of the signal specification architecture 39
Figure 16 – SM transmitter eye diagram mask 42
Figure 17 – Sinusoidal jitter mask 45
Figure 18 – 1,06 GBd SM 10 km link 47
Figure 19 – 2,12 GBd SM 10 km link 48
Figure 20 – 4,25 GBd SM 10 km link 48
Figure 21 – MM transmitter eye diagram mask 49
Figure 22 – Duplex SC optical interface 55
Figure 23 – SG interface 56
Figure 24 – Duplex LC interface 57
Figure 25 – MT-RJ connector and receptacle 58
Figure 26 – MU connector plug envelope dimensions 58
Figure 27 – Normalized (left) and absolute (right) eye diagram masks at β_T, δ_T and γ_T 67
Figure 28 – Eye diagram mask at β_R, δ_R and γ_R 68
Figure 29 – Deriving the tolerance mask at the interoperability T points 68
Figure 30 – Deriving the tolerance masks at the interoperability R points 69
Figure 31 – Sinusoidal jitter mask 69
Figure 32 – Inter-enclosure transmitter compliance point γ_T 71
Figure 33 – Inter-enclosure receiver compliance point γ_R 72
Figure 34 – Intra-enclosure transmitter compliance point β_T 72
Figure 35 – Intra-enclosure receiver compliance point β_R 72
Figure 36 – Test loads 73
Figure 37 – Example xxx-SE-EL-S inter-enclosure TxRx with 75. unbalanced cable 74
Figure 38 – Example xxx-DF-EL-S inter-enclosure TxRx with 150. balanced cable 74
Figure 39 – Balanced cable wiring 77
Figure 40 – Style-1 balanced connector plug contact locations 78
Figure 41 – Style-2 plug and receptacle 78
Figure 42 – Style-2 balanced connector receptacle contact locations 79
Figure 43 – Intra-enclosure integral Fibre Channel device connector 80
Figure 44 – Contact numbering for integral FC device connector 80
Figure A.1 – RIN (OMA) test setup 85
Figure A.2 – Optical modulation amplitude test equipment configuration 88
Figure A.3 – OMA measurement 88
Figure A.4 – Required characteristics of the conformance test signal at γ_R 89
Figure A.5 – Apparatus for generating stressed receive conformance test signal at γ_R 90
Figure A.6 – Test setup for receiver bandwidth measurement 90
Figure B.1 – Fibre channel electrical interface example block diagram 92
Figure B.2 – PECL communication levels 93
Figure B.3 – SSTL_2 compatible communication levels 93
Figure B.4 – Recovered interface signal timing 94
Figure B.5 – Transmit parallel interface timings: 106,25 MBd 95
Figure B.6 – Transmit parallel interface timings: 212,5 MBd 95
Figure B.7 – Receive parallel interface timings: 106,25 MBd 97
Figure B.8 – Receive parallel interface timings: 212,5 MBd 97

Copyright International Organization for Standardization
Provided by IHS under license with ISO
No reproduction or networking permitted without license from IHS
Not for Resale

INFORMATION TECHNOLOGY – FIBRE CHANNEL – Part 115: Physical interfaces (FC-PI)

FOREWORD

1) ISO (International Organization for Standardization) and IEC (International Electrotechnical Commission) form the specialized system for worldwide standardization. National bodies that are members of ISO or IEC participate in the development of International Standards through technical committees established by the respective organization to deal with particular fields of technical activity. ISO and IEC technical committees collaborate in fields of mutual interest. Other international organizations, governmental and non-governmental, in liaison with ISO and IEC, also take part in the work.

2) In the field of information technology, ISO and IEC have established a joint technical committee, ISO/IEC JTC 1. Draft International Standards adopted by the joint technical committee are circulated to national bodies for voting. Publication as an International Standard requires approval by at least 75 % of the national bodies casting a vote.

3) All users should ensure that they have the latest edition of this publication.

4) No liability shall attach to IEC or ISO or its directors, employees, servants or agents including individual experts and members of their technical committees and IEC or ISO member bodies for any personal injury, property damage or other damage of any nature whatsoever, whether direct or indirect, or for costs (including legal fees) and expenses arising out of the publication of, use of, or reliance upon, this ISO/IEC publication or any other IEC, ISO or ISO/IEC publications.

5) Attention is drawn to the normative references cited in this publication. Use of the referenced publications is indispensable for the correct application of this publication.

6) Attention is drawn to the possibility that some of the elements of this International Standard may be the subject of patent rights. ISO and IEC shall not be held responsible for identifying any or all such patent rights.

International Standard ISO/IEC 14165-115 was prepared by subcommittee 25: Interconnection of information technology equipment, of ISO/IEC joint technical committee 1: Information technology.

This International Standard has been approved by vote of the member bodies, and the voting results can be obtained from the address given on the title page.

Copyright International Organization for Standardization
Provided by IHS under license with ISO
No reproduction or networking permitted without license from IHS Not for Resale

INTRODUCTION

This International Standard describes the physical interface portions of a high performance serial link that supports the higher Upper Level Protocols (ULPs) associated with HIPPI, IPI, SCSI, IP and others.

Figure 0 shows the relationship of this standard (highlighted rectangle) with other Fibre Channel standards. For the full reference of publication numbers and titles, see bibliography.

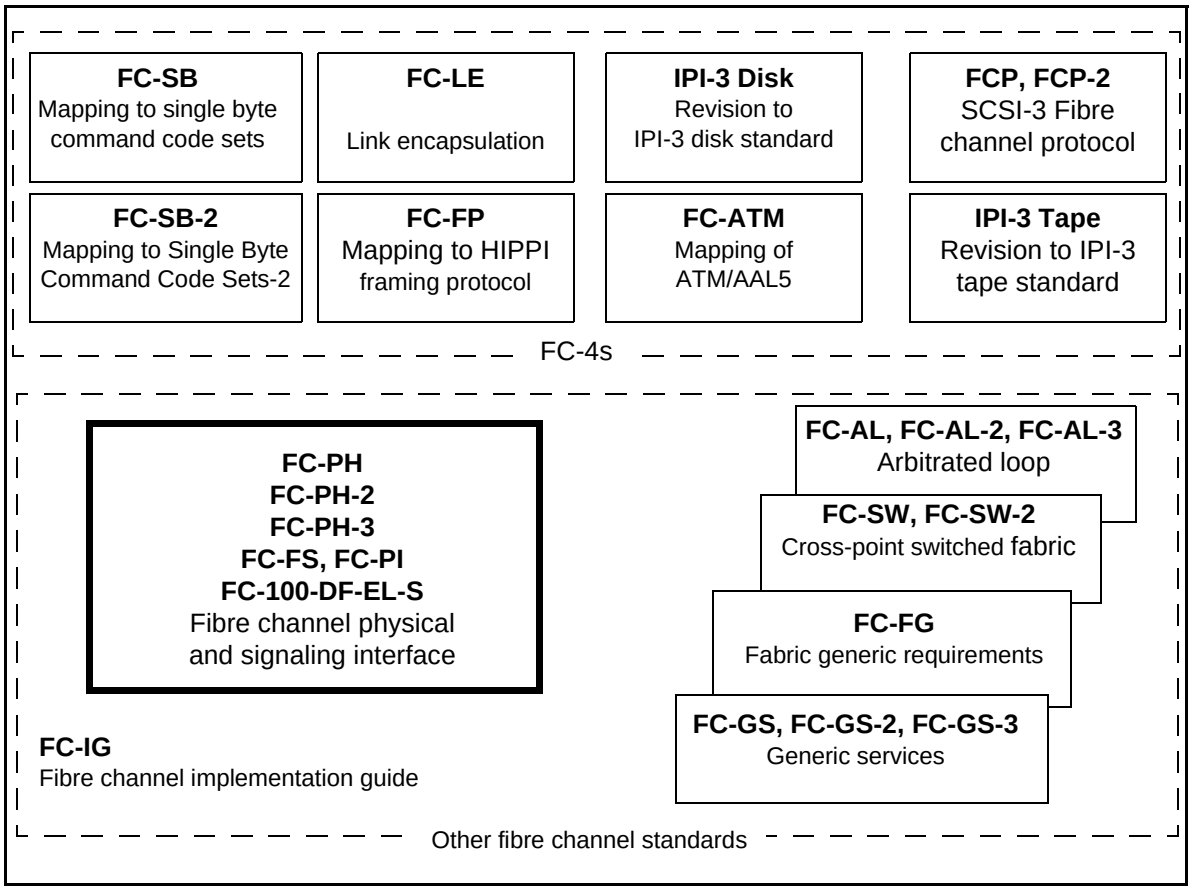

Figure 0 - Document relationship

The information presented in this document is grouped into clauses:

Clause 1 gives a general introduction to the document.

Clause 2 lists the standards which are referenced in the text and which constitute provisions of this document.

Clause 3 describes the basic elements, acronyms, naming conventions and terminology used in this document.

Clause 4 provides an overview of the structure, concepts, configurations and mechanisms used in this document.

Clause 5 describes the physical link, the lowest level, in the Fibre Channel system. It is designed for flexibility and allows the use of several physical interconnect technologies to meet a wide variety of system application requirements.

Clause 6 defines the optical signal characteristics at the interface connector. Each conforming optical FC attachment shall be compatible with this optical interface to allow interoperability within an FC environment.

Copyright International Organization for Standardization
Provided by IHS under license with ISO
No reproduction or networking permitted without license from IHS Not for Resale

Fibre Channel links shall not exceed the BER objective (10^{-12}) under any conditions. The parameters specified in this clause support meeting that requirement under all conditions including the minimum input power level.

Clause 7 describes how the optical interface connector aligns the optical transmission fibre mechanically to an optical port on a component such as a receiver or a transmitter.

Clause 8 specifies a single-mode cable plant for the Fibre Channel signaling rates of 1,06 GBd, 2,12 GBd and 4,25 GBd at their rated distance of 10 km.

Clause 9 defines the interfaces of the serial electrical signal at the reference points α and at the inter-operability points β, δ and γ in a TxRx Connection. The existence of a β, δ or γ point is determined by the existence of a connector at that point in a TxRx Connection.

Clause 10 defines the TxRx Connection requirements for a Fibre Channel electrical cable plant and its connectors.

Annex A defines terms, measurement techniques and conditions for testing jitter and wave shapes. It deals with issues specific to Fibre Channel and is not intended to supplant standard test procedures referenced in the specifications.

Annex B describes an example implementation of the electrical SERDES interface to meet the requirements of FC-PI.

Annex C provides information on the use of an alternative multimode cable plant to those described in 6.4.

Annex D extends the optical and electrical interface specifications of clause 6 and clause 9, in the areas of transmitter-off behavior and the (optional) receiver loss-of-signal function. It gives the background, scope and qualitative and quantitative requirements for Tx-off and Rx-LOS in FC physical interfaces.

Copyright International Organization for Standardization
Provided by IHS under license with ISO
No reproduction or networking permitted without license from IHS Not for Resale

INFORMATION TECHNOLOGY –

FIBRE CHANNEL –

Part 115: Physical interfaces (FC-PI)

1 Scope

This part of ISO/IEC 14165 describes the physical interface portions of a high performance serial link that supports the higher Upper Level Protocols (ULPs) associated with HIPPI, IPI, SCSI, IP and others.

This International Standard incorporates features described in other international standards (see clause 2 and bibliography).

2 Normative references

2.1 Overview

The following referenced documents are indispensable for the application of this document. For dated references, only the edition cited applies. For undated references, the latest edition of the referenced document (including any amendments) applies.

2.2 International Standards

IEC 60169-8, *Radio-frequency connectors - Part 8: R.F. coaxial connectors with inner diameter of outer conductor 6,5 mm (0,256 in) with Bayonet Lock (Type BNC)*

IEC 60169-15, *Radio-frequency connectors - Part 15: R.F. coaxial connectors with inner diameter of outer conductor 4,13 mm (0,163 in) with screw coupling - Characteristic impedance (Type SMA)*

IEC 60169-17, *Radio-frequency connectors - Part 17: R.F. coaxial connectors with inner diameter of outer conductor 6,5 mm (0,256 in) with screw coupling - Characteristic impedance 50 Ω (Type TNC)*

IEC 60793-1-20, *Optical fibres - Part 1-20: Measurement methods and text procedures - Fibre geometry*

NOTE All fibre geometry methods have been consolidated into IEC 60793-1-20.

IEC 60793-1-41, *Optical fibres - Part 2-41: Measurement methods and test procedures - Bandwidth*

IEC 60793-1-43, *Optical fibres - Part 2-43: Measurement methods and test procedures - Numerical aperture*

IEC 60793-2, *Optical fibres - Part 2: Product specifications - General*

IEC 60793-2-10, *Optical fibres - Part 2-10: Product specifications - Sectional specification for category A1 multimode fibres* (ANSI/TIA/EIA-492AAAA and ANSI/TIA/EIA-492AAAB)

IEC 60793-2-50, *Optical fibres - Part 2-50: Product specifications - Sectional specification for class B single-mode fibres*

IEC 60807-3, *Rectangular connectors for frequencies below 3 MHz - Part 3: Detail specification for a range of connectors with trapezoidal shaped metal shells and round contacts - Removable crimp contact types with closed crimp barrels, rear insertion/rear extraction*

IEC 60825-1, *Safety of laser products - Part 1: Equipment classification, requirements and user's guide*

IEC 61076-3-103, *Connectors for electronic equipment - Part 3-103: Rectangular connectors - Detail specification for single row connectors with non-removable ribbon cable contacts on 1,25 mm pitch used for high speed serial data (HSSDC)*

IEC 61280-1-1, *Fibre optic communication subsystem basic test procedures - Part 1-1: Test procedures for general communication subsystems - Transmitter output optical power measurement for single-mode optical fibre cable*

Copyright International Organization for Standardization
Provided by IHS under license with ISO
No reproduction or networking permitted without license from IHS Not for Resale

IEC 61280-1-3, *Fibre optic communication subsystem basic test procedures - Part 1-3: Test procedures for general communication subsystems - Central wavelength and spectral width measurement*

IEC 61280-2-2, *Fibre optic communication subsystem test procedures - Part 2-2: Digital systems - Optical eye pattern, waveform and extinction ratio measurement*

IEC 61280-4-1, *Fibre optic communication subsystem test procedures - Part 4-1: Cable plant and links - Multimode fibre-optic cable plant attenuation measurement*

IEC 61300-2-5, *Fibre optic interconnecting devices and passive components - Basic test and measurement procedures - Part 2-5: Tests - Torsion/Twist*

IEC 61300-2-17, *Fibre optic interconnecting devices and passive components - Basic test and measurement procedures - Part 2-17: Tests - Cold*

IEC 61300-3-3, *Fibre optic interconnecting devices and passive components - Basic test and measurement procedures - Part 3-3: Examinations and measurements - Active monitoring of changes in attenuation and return loss*

IEC 61300-3-6, *Fibre optic interconnecting devices and passive components - Basic test and measurement procedures - Part 3-6: Examinations and measurements - Return loss*

IEC 61300-3-11, *Fibre optic interconnecting devices and passive components - Basic test and measurement procedures - Part 3-11: Examinations and measurements - Engagement and separation forces*

IEC 61754-4, *Fibre optic connector interfaces - Part 4: Type SC connector family*

IEC 61754-6, *Fibre optic connector interfaces - Part 6: Type MU connector family*

IEC 61754-18, *Fibre optic connector interfaces - Part 18: Type MT-RJ connector family*

IEC 61754-19, *Fibre optic connector interfaces - Part 19: Type SG connector family*

IEC 61754-20, *Fibre optic connector interfaces - Part 20: Type LC connector family*

ISO/IEC 11801, *Information technology - Generic cabling for customer premises*

2.3 Other references

All references in this subclause were correct at the time of approval of this International Standard. The provisions of the referenced specifications, as identified in this subclause, are valid within the context of this International Standard. The reference to a specification within this International Standard does not give it any further status within ISO/IEC; in particular, it does not give the referenced specification the status of an International Standard.

EIA-700-A0AF - [SP-3652] Integral FC Device Connector

SFF-8451, Specification for SCA-2 Unshielded Connections [1]

SFF-8045, 40-pin SCA-2 Connector with Parallel Selection [1]

1. SFF documents are available by FAX access from 408-741-1600 or may be purchased from Global Engineering at 303-792-2181. These documents may become international standards at a later date; they are currently new work proposals.

Copyright International Organization for Standardization
Provided by IHS under license with ISO
No reproduction or networking permitted without license from IHS Not for Resale

3 Definitions and conventions

For the purposes of this International Standard, the following definitions, conventions, abbreviations, acronyms and symbols apply.

3.1 Definitions

3.1.1
reference points α_T, α_R
used for establishing signal budgets at the serial input and output pins of the chip containing the SERDES in an FC device or Retimer
α points form the end-points of a TxRx Connection

3.1.2
interoperability points β_T, β_R
used for establishing signal budget at the internal connector nearest the α point, unless the point also satisfies the definition for δ or γ, in which case it shall be either a δ or a γ point

3.1.3
interoperability points δ_T, δ_R
used for establishing signal budget at the internal connector of a removable “Physical Media Dependent” (PMD) element

3.1.4
interoperability points γ_T, γ_R
used for establishing signal budgets at the external enclosure connector

3.1.5
attenuation
transmission medium power or amplitude loss expressed in units of dB

3.1.6
average power
optical power measured using an average-reading power meter when transmitting valid 8B/10B transmission characters

3.1.7
bandwidth
FC-PI context, the corner frequency of a low-pass transmission characteristic, such as the low-pass transmission characteristics of an optical receiver

The modal bandwidth of an optical fibre medium is expressed in units of MHzkm.

3.1.8
baud
unit of signaling speed, expressed as the maximum number of times per second the state of the signal on the transmission line or other medium can change (the dimension of baud is s^{-1})

NOTE With the Fibre Channel transmission scheme, a signal event represents a single transmission bit (adapted from IEEE Std. 610.7-1995).

3.1.9
bit error ratio (BER)
probability of a transmitted bit being erroneously received in a communication system. BER is the number of bits output from a receiver that differ from the transmitted bits, divided by the number of transmitted bits. See baud

--`,,```,,,,````-`-`,,`,,`,`,,`---

Copyright International Organization for Standardization
Provided by IHS under license with ISO
No reproduction or networking permitted without license from IHS Not for Resale

3.1.10
bit synchronization
condition in which a receiver is delivering retimed serial data at the required BER

3.1.11
byte
eight-bit entity prior to encoding, or, after decoding, with its least significant bit denoted as bit 0 and most significant bit as bit 7. The most significant bit is shown on the left side in FC-FS, unless specifically indicated otherwise.

3.1.12
cable plant
all passive communications elements (e.g., optical fibre, twisted pair, coaxial cable, connectors, splices, etc.) between a transmitter and a receiver

3.1.13
centre wavelength (laser)
value of the central wavelength of the operating, modulated laser. It is the wavelength (see IEC 61280-1-3) where the effective optical power resides

3.1.14
character
see transmission character

3.1.15
coaxial cable
cable containing one or more coaxial lines, typically used for matched connection of associated equipment to the measuring equipment or (test-) signal generator providing a specified characteristic impedance and a specified maximum allowable cable transfer impedance

3.1.16
compliance point
compliance points are defined as those interoperability points at which the interoperability specifications are met. They may include β, γ and δ points for transmitters and receivers

3.1.17
dispersion
a term used to denote pulse broadening and distortion. The two general categories of dispersion are modal dispersion, due to the difference in the propagation velocity of the propagation modes in a multimode fibre and chromatic dispersion, due to the difference in propagation of the various spectral components of the optical source. Similar effects exist in electrical media when the velocity of propagation (V_P) of the spectral components of a non-sinusoidal signal are not constant over frequency

3.1.18
duty cycle distortion (*DCD*)
ratio of the mean pulse width of a '1' divided by two UI. *DCD* is part of the *DJ* distribution and is measured at the average value of the waveform

3.1.19
electrical fall time
time interval for the falling edge of an electrical pulse to transit between specified percentages of the signal amplitude. In the context of FC-PI, the measurement points are the 80 % and 20 % voltage levels

3.1.20
electrical rise time
time interval for the rising edge of an electrical pulse to transit between specified percentages of the signal amplitude. In the context of FC-PI, the measurement points are the 20 % and 80 % voltage levels

Copyright International Organization for Standardization
Provided by IHS under license with ISO
No reproduction or networking permitted without license from IHS Not for Resale

3.1.21
enclosure
outermost electrically conducting boundary (that acts as an EMI barrier) containing one or more FC devices

3.1.22
external connector
a connector, whose purpose is to carry the FC signals into and out of an Enclosure with only minor compromise to the shield effectiveness of the Enclosure

3.1.23
eye opening (horizontal)
time interval across the eye, measured at the average voltage or optical power level, which contains all but 10^{-12} of the threshold crossing population at the same level

3.1.24
FC device
entity that supports the FC protocol functions through one or more of the connectors defined in this document. A local reference clock is used to time the serial output data stream. See 3.1.58.

3.1.25
FC device connector
connector defined in this document which carries the FC serial data signals into and out of the FC device

3.1.26
fibre
general term used to cover all transmission media specified in FC-PI

3.1.27
fibre optic cable
cable containing one or more fibre optic waveguides with jacketing material provided to facilitate handling and to protect the jacketed optical fibre or fibres

3.1.28
interface connector
optical or electrical connector which connects the media to the Fibre Channel transmitter or receiver. The connector set consists of a receptacle and a plug

3.1.29
internal connector
connector, whose purpose is to carry the FC signals within an enclosure (may be shielded or unshielded)

3.1.30
internal FC device
FC device whose FC device connector is contained within an enclosure; an internal port

3.1.31
interoperability point
points in a link or TxRx Connection for which this standard defines signal requirements to enable interoperability. See β_T, β_R, δ_T, δ_R γ_T and γ_R

3.1.32
intersymbol interference
effect on a sequence of symbols in which the symbols are distorted by transmission through a limited bandwidth medium to the extent that adjacent symbols interfere with each other

Copyright International Organization for Standardization
Provided by IHS under license with ISO
No reproduction or networking permitted without license from IHS Not for Resale

3.1.33
jitter
deviation from the ideal timing of a threshold crossing event. Jitter is composed of both deterministic and Gaussian (random) content. Low frequency deviations are tracked by the clock recovery circuit and do not directly affect the timing allocations within a bit cell. Jitter that is not tracked by the clock recovery circuit directly affects the timing allocations in a bit cell. For FC-PI the lower cutoff frequency of the clock recovery circuit is the bit rate divided by 1 667. Jitter is measured at the differential zero crossing for balanced electrical signals, the average voltage level for unbalanced electrical signals and the average optical power level for optical systems

3.1.34
jitter, data dependent
the jitter which is added when the transmission pattern is changed from a clock like to a non-clock like pattern, includes ISI

3.1.35
jitter, deterministic (*DJ*)
jitter with non-Gaussian probability density function. Deterministic jitter is always bounded in amplitude and has specific causes. Components of *DJ* may include duty cycle distortion, data dependent jitter, sinusoidal jitter and other bounded jitter uncorrelated to the data. *DJ* is characterized by its bounded, peak-to-peak value

3.1.36
jitter, random (*RJ*)
jitter that is characterized by a Gaussian distribution. Random jitter is defined to be the peak-to-peak value for a BER of 10^{-12}, taken to be approximately 14 times the standard deviation of the Gaussian distribution

3.1.37
jitter tolerance
ability of an FC device or Retimer to recover an incoming data stream correctly in the presence of jitter. It is characterized by the amount of jitter required to produce a specified BER. The tolerance is affected by the frequency of the jitter.

3.1.38
laser chirp
phenomenon in lasers where the wavelength of the emitted light changes during modulation

3.1.39
level
1. A document artifice, e.g. FC-0, used to group related architectural functions. No specific correspondence is intended between levels and actual implementations.
2. In FC-PI context, a specific value of voltage (e.g., voltage level)

3.1.40
limiting amplifier
active circuit with amplitude gain that keeps the output levels within specified levels

3.1.41
link
1. Two unidirectional fibres transmitting in opposite directions and their associated transmitters and receivers.
2. A synonym for a duplex TxRx Connection

3.1.42
mandatory
function which is required to be supported by a compliant implementation of FC-PI

Copyright International Organization for Standardization
Provided by IHS under license with ISO
No reproduction or networking permitted without license from IHS Not for Resale

3.1.43
mode partition noise (MPN)
noise in a laser based optical communication system caused by the changing distribution of laser energy partitioning itself among the laser modes (or lines) on successive pulses in the data stream. The effect is a different centre wavelength for the successive pulses resulting in arrival time jitter attributable to chromatic dispersion in the fibre

3.1.44
node
collection of one or more N_Ports controlled by a level above FC-2

3.1.45
numerical aperture
the sine of the radiation or acceptance half angle of an optical fibre, multiplied by the refractive index of the material in contact with the exit or entrance face. See IEC 60793-1-43

3.1.46
Open Fibre Control (OFC)
a safety interlock system used in some early Fibre Channel variants to control the optical power level on an open optical fibre cable. OFC is not used in any physical variant specified by FC-PI

3.1.47
optical fall time
time interval required for the falling edge of an optical pulse to transit between specified percentages of the signal amplitude. For lasers the transitions are measured between the 80 % and 20 % points

3.1.48
optical fibre
any filament or fibre, made of dielectric material, that guides light

3.1.49
optical modulation amplitude
absolute difference between the optical power of a logic one level and the optical power of a logic zero level

3.1.50
optical receiver overload
condition of exceeding the maximum acceptable value of the received average optical power at point γ_R to achieve a BER < 10^{-12}

3.1.51
optical receiver sensitivity
minimum acceptable value of received signal at point γ_R to achieve a BER < 10^{-12}. See A.7

3.1.52
optical path penalty
link optical power penalty to account for signal degradation other than attenuation

3.1.53
optical reference plane
plane that defines the optical boundary between the plug and the receptacle

3.1.54
optical rise time
time interval required for the rising edge of an optical pulse to transit between specified percentages of the signal amplitude. For lasers the transitions are measured between the 20 % and 80 % points

Copyright International Organization for Standardization
Provided by IHS under license with ISO
No reproduction or networking permitted without license from IHS Not for Resale

3.1.55
optical return loss (ORL)
See return loss

3.1.56
optional
characteristics that are not required by FC-PI. However, if any optional characteristic is implemented, it shall be implemented as defined in FC-PI

3.1.57
plug
that "half" of the interface connector which terminates an optical or electrical signal transmission cable

3.1.58
port
generic reference to an N_Port or F_Port. See 3.1.24 and 3.1.30

3.1.59
receiver
in FC-PI context, an electronic circuit (Rx) that converts a signal from the media (optical or electrical) to an electrical logic signal

3.1.60
receptacle
the fixed or stationary half of the interface connector which is part of the transmitter or receiver

3.1.61
reclocker
type of repeater specifically designed to modify data edge timing in such a way that the data edges have a defined timing relation with respect to a bit clock recovered from the (FC) data at its input

3.1.62
reference points
points in a TxRx Connection at which informative specifications may be written. These specifications establish the base values for the interoperability points. See α_T and α_R

3.1.63
reflections (optical)
power returned to point γ_T by discontinuities in the physical link

3.1.64
repeater
an active circuit designed to modify the (FC) signals that pass through it by changing any or all of the following parameters of that signal: amplitude, slew rate and edge to edge timing. Repeaters have jitter transfer characteristics. Types of repeaters include Retimers, Reclockers and amplifiers

3.1.65
retimer
type of repeater specifically designed to modify data edge timing in such a way that the data edges have a defined timing relation with respect to a bit clock derived from a timing reference other than the (FC) data at its input. A Retimer shall be capable of inserting and removing fill words (see FC-FS) from the (FC) data passing through it. Inserting a retimer into a TxRx Connection creates two TxRx Connections. Retimers provide complete isolation of input wander and their output jitter is unrelated to the input jitter. Retimers are further characterized by their signal properties including their input jitter tolerance and their jitter output. These input and output properties may be associated with selected interoperability points dependent on the application

--`,,```,,,,````-`-`,,`,,`,`,,`---

Copyright International Organization for Standardization
Provided by IHS under license with ISO
No reproduction or networking permitted without license from IHS Not for Resale

3.1.66
return loss
ratio (expressed in dB) of incident power to reflected power, when a component or assembly is introduced into a link or system. May refer to optical power or to electrical power in a specified frequency range

3.1.67
RIN_{12}(OMA)
relative Intensity Noise. Laser noise in dB/Hz with 12 dB optical return loss, with respect to the optical modulation amplitude

3.1.68
run length
number of consecutive identical bits in the transmitted signal e.g., the pattern 0011111010 has a run length of five (5)

3.1.69
running disparity
binary parameter indicating the cumulative Disparity (positive or negative) of all previously issued Transmission Characters

3.1.70
special character
any Transmission Character considered valid by the Transmission Code but not equated to a Valid Data Byte. Special Characters are provided by the Transmission Code for use in denoting special functions

3.1.71
spectral width (RMS)
weighted root mean square width of the optical spectrum. See IEC 61280-1-3

3.1.72
stressed receiver sensitivity
normal amplitude of optical modulation in the stressed receiver test given in A.7

3.1.73
stressed receiver vertical eye closure power penalty
ratio of the power required to achieve normal optical modulation amplitude to the power required to achieve the vertical eye opening in the stressed receiver test (see A.7)

3.1.74
synchronization
bit synchronization, defined above, and/or Transmission-Word synchronization, defined in FC-FS. An FC-1 receiver enters the state “Synchronization-Acquired” when it has achieved both kinds of synchronization

3.1.75
transceiver
transmitter and receiver combined in one package

3.1.76
transmission character
any 10-bit encoded character (valid or invalid) transmitted across a physical interface specified by FC-PI. Valid Transmission Characters are specified by the Transmission Code and include Data and Special Characters

--`,,```,,,,````-`-`,,`,,`,`,,`---
Copyright International Organization for Standardization
Provided by IHS under license with ISO
No reproduction or networking permitted without license from IHS
Not for Resale

3.1.77
transmission code
means of Encoding data to enhance its Transmission Characteristics. The Transmission Code specified by FC-FS is byte-oriented, with (1) Valid Data Bytes and (2) Special Codes encoded into 10-bit Transmission Characters

3.1.78
transmission word
string of four contiguous Transmission Characters occurring on boundaries that are zero modulo 4 from a previously received or transmitted Special Character

3.1.79
transmitter
in FC-PI context, an Electronic circuit (Tx) that converts an electrical logic signal to a signal suitable for the communications media (optical or electrical)

3.1.80
TxRx Connection
the complete simplex signal path between the output α point of one FC device, or retimer, to the input α point of a second FC device or retimer, over which a BER of $<10^{-12}$ is achieved. It is one half of a duplex link

3.1.81
TxRx Connection segment
that portion of a TxRx Connection delimited by separable connectors or changes in media

3.1.82
unit interval
period of a nominal bit for a given signaling speed. It is equivalent to the shortest nominal time between signal transitions. UI is the reciprocal of Baud (Units of UI are seconds)

3.1.83
word
string of four contiguous bytes occurring on boundaries that are zero modulo 4 from a specified reference

3.2 Editorial conventions

In this standard, a number of conditions, mechanisms, parameters, events, states or similar terms are printed with the first letter of each word in upper-case and the rest lower-case (e.g. TxRx Connection). Any lower case use of these words has the normal technical English meaning.

Numbered items in this standard do not represent any priority. Any priority is explicitly indicated.

In case of conflict between figure, table and text, the text takes precedence. Exceptions to this convention are indicated in the appropriate clauses.

In all of the figures, tables and text of this document, the most significant bit of a binary quantity is shown on the left side. Exceptions to this convention are indicated in the appropriate clauses.

The term “shall” is used to indicate a mandatory rule. If such a rule is not followed, the results are unpredictable unless indicated otherwise.

The ISO/IEC convention of numbering is used, i.e. the ten-thousands and higher multiples are separated by a space. A comma is used as the decimal point. A comparison of the American and ISO/IEC rules are shown below:

Copyright International Organization for Standardization
Provided by IHS under license with ISO
No reproduction or networking permitted without license from IHS Not for Resale

Table 1 – ISO/IEC rules

ISO/IEC	American
0,6	0.6
2 048	2048
10 000	10,000
1 323 462,9	1,323,462.9

3.2.1 Abbreviations, acronyms and symbols

Abbreviations, acronyms and symbols applicable to this International Standard are listed in 3.2.4 and 3.3 respectively. Definitions of several of these items are included in 3.1.

3.2.2 Signaling rate abbreviations

The exact signaling rates are used in the tables and the abbreviated forms are used in text. Note that 2,125 GBd is the preferred IEC/ISO method and is used instead of 2 125 MBd where it makes sense to do so.

Table 2 – Signaling rate abbreviations

Abbreviation	Abbreviation (FC-PH style)	True signalling rate
1,06 GBd	1 063 MBd	1 062,5 MBd
2,12 GBd	2 125 MBd	2 125 MBd
4,25 GBd	4 250 MBd	4 250 MBd

3.2.3 Synonyms

There are no synonyms in FC-PI.

Copyright International Organization for Standardization
Provided by IHS under license with ISO
No reproduction or networking permitted without license from IHS Not for Resale

3.2.4 Acronyms and other abbreviations

Table 3 – Acronyms and other abbreviations

Bd	baud
BER	bit error rate
BNC	Bayonet-Neil-Councilman (coaxial connector)
BT	Bessel-Thomson
CCITT	Comite Consultatif International Telegraphique et Telephonique (see ITU-TS)
Cu	Copper
dB	decibel
dBm	decibel (relative to 1 mW)
DCD	duty cycle distortion
DJ	deterministic jitter
DUT	device under test
ECL	Emitter Coupled Logic
EIA	Electronic Industries Association
EMC	Electromagnetic compatibility
EMI	Electromagnetic Interference
FC	Fibre Channel
FOTP	fibre optic test procedure
FWHM	full width half maximum
GBd	gigabaud
hex	hexadecimal notation
IEEE	Institute of Electrical and Electronics Engineers
ISI	Inter symbol interference
ITU-TS	The International Union Telecommunication Standardization (formerly CCITT)
LOS	loss of signal
LPDL	lowest pull-down level
LPUL	lowest pull-up level
LW	long wavelength
MB	megabyte = 10^6 bytes
MBd	megabaud
MPDL	maximum pull-down level
MPN	mode partition noise
MPUL	maximum pull-up level
MM	multimode
NA	not applicable
NEXT	Near-End Crosstalk
N_Port	Node_Port
OFC	open fibre control
OFSTP	optical fibre system test procedure
OMA	optical modulation amplitude
Op	optical
ORL	optical return loss
PECL	Positive Emitter Coupled Logic
PMD	physical medium dependent
pk-pk	peak to peak
r.f.	radio frequency
RFI	radio frequency interference
RIN	relative intensity noise
RJ	random jitter
RMS	root mean square
Rx	receiver
SD	Signal Detect
SERDES	Serializer/Deserializer
SJ	Sinusoidal Jitter
SM	single mode
S/N or SNR	signal-to-noise ratio
SSTL	Stub Series Terminated Logic
STP	shielded twisted pair
SW	short wavelength

Copyright International Organization for Standardization
Provided by IHS under license with ISO
No reproduction or networking permitted without license from IHS Not for Resale

Table 3 – Acronyms and other abbreviations

TDR	time domain reflectometry
TIA	Telecommunication Industries Association
TJ	Total Jitter
TNC	Threaded-Neil-Councilman (coaxial connector)
TP	twisted pair
Tx	transmitter
TxRx	a combination of transmitter and receiver
UI	unit interval = 1 bit period
ULP	Upper Level Protocol
VSWR	Voltage Standing Wave Ratio

3.3 Symbols

Unless indicated otherwise, the following symbols have the listed meanings.

Table 4 – Symbols

α	alpha
β	beta
γ	gamma
δ	delta
ρ	rho
Ω	ohm
μ	micro (e.g., μm = micrometer)
λ	wavelength
	chassis or earth ground
	signal reference ground

Copyright International Organization for Standardization
Provided by IHS under license with ISO
No reproduction or networking permitted without license from IHS Not for Resale

4 Structure and concepts

4.1 General

This clause provides an overview of the structure, concepts and mechanisms used in FC-PI and is intended for informational purposes only.

The Fibre Channel (FC) is logically a bi-directional point-to-point serial data channel, structured for high performance information transport. Physically, Fibre Channel is an interconnection of one or more point-to-point links. Each link end terminates in a Port or Retimer. Ports are fully specified in FC-PI and FC-FS. Fibre is a general term used to cover all physical media supported by Fibre Channel including optical fibre, twisted pair and coaxial cable.

Fibre Channel is structured as a set of hierarchical functions as illustrated in figure 1. Fibre Channel consists of related functions FC-0 through FC-3. Each of these functions are described as a level. Fibre Channel does not restrict implementations to specific interfaces between these levels.

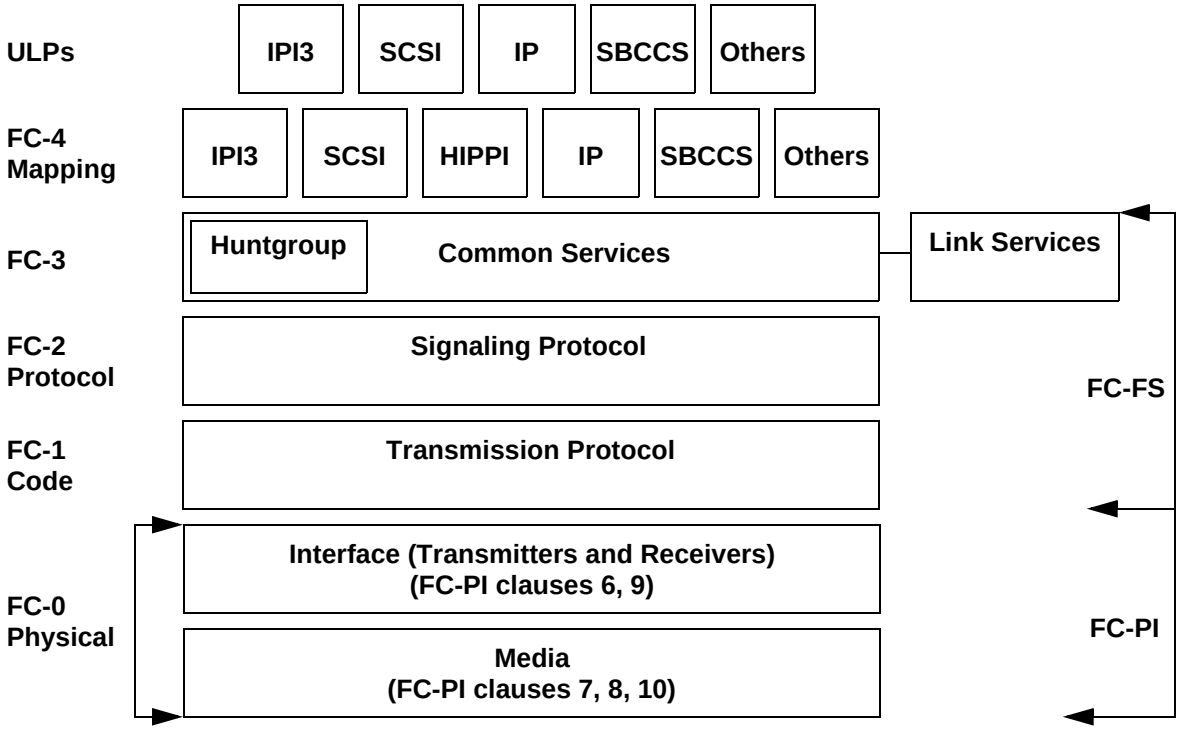

Figure 1 – Fibre channel structure

The Physical interface (FC-0), specified in FC-PI, consists of transmission media, transmitters, receivers and their interfaces. The Physical interface specifies a variety of media and associated drivers and receivers capable of operating at various speeds.

The Transmission protocol (FC-1), signaling protocol (FC-2) and Common Services (FC-3) are fully specified in FC-FS. Fibre Channel levels FC-1 through FC-3 specify the rules and provides mechanisms needed to transfer blocks of information end-to-end, traversing one or more links.

FC-PI and FC-FS define a suite of functions and facilities available for use by a Upper Level Protocols (ULP) Mapping protocol (FC-4). This suite of functions and facilities may exceed the requirements of any one FC-4. An FC-4 may choose only a subset of FC-PI and FC-FS functions and facilities. Fibre Channel provides a method for supporting a number of ULPs. The Link Services represent a mandatory function required by FC-PI and FC-FS.

A Fibre Channel Node is functionally configured as illustrated in figure 2. A Node may support one or more N_Ports and one or more FC-4s. Each N_Port contains FC-0, FC-1 and FC-2 functions. FC-3 optionally provides the common services to multiple N_Ports and FC-4s.

--`,,```,,,,````-`-`,,`,,`,`,,`---

Copyright International Organization for Standardization
Provided by IHS under license with ISO
No reproduction or networking permitted without license from IHS Not for Resale

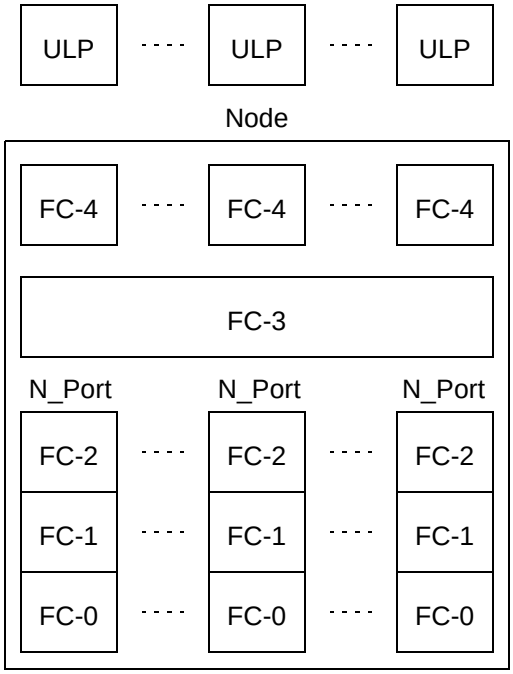

Figure 2 – Node functional configuration

4.2 FC-0 general description

The FC-0 level of FC-PI describes the Fibre Channel link. The FC-0 level covers a variety of media and the associated drivers and receivers capable of operating at a wide range of speeds. The FC-0 level is designed for maximum flexibility and allows the use of a large number of technologies to meet the widest range of system requirements.

Each fibre is attached to a transmitter of a Port or Retimer at one link end and a receiver of another Port or Retimer at the other link end (see figure 3). When a Fabric is present in the configuration, multiple links may be utilized to attach more than one N_Port to more than one F_Port (see figure 4). Patch panels or portions of the active Fabric may function as repeaters, concentrators or fibre converters. A path between two N_Ports may be made up of links of different technologies. For example, the path may have multimode fibre links attached to end Ports but may have a single-mode link in between as illustrated in figure 5. In figure 6, a typical Fibre Channel building wiring configuration is shown.

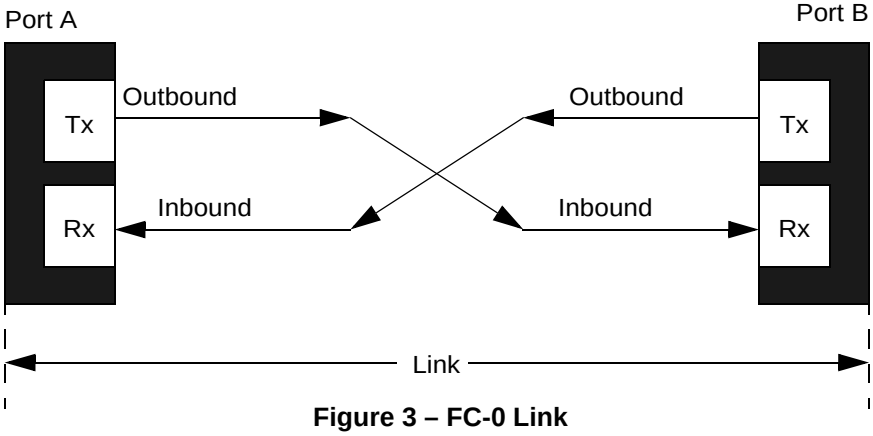

Figure 3 – FC-0 Link

--`,,```,,,,````-`-`,,`,,`,`,,`---

Copyright International Organization for Standardization
Provided by IHS under license with ISO
No reproduction or networking permitted without license from IHS Not for Resale

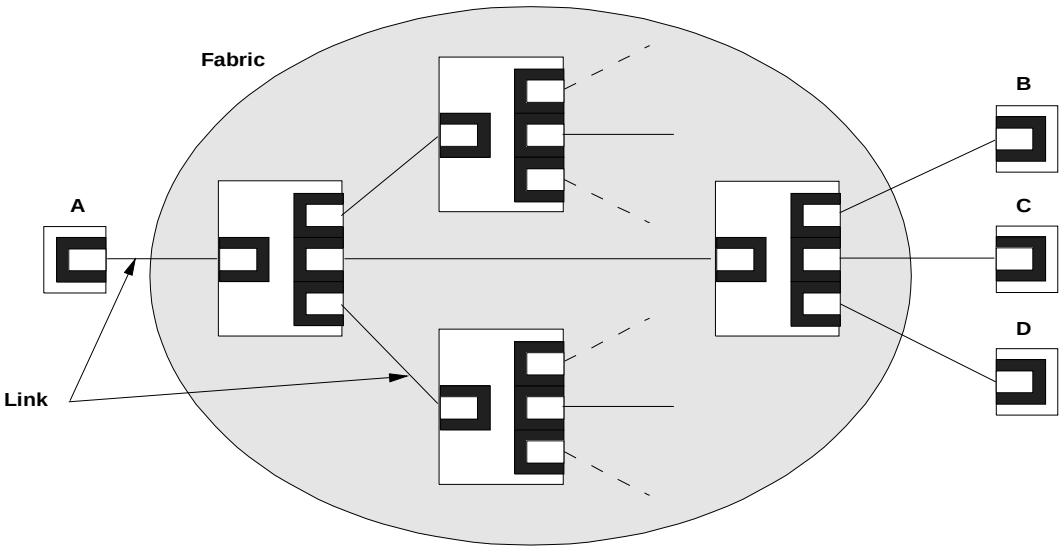

Figure 4 – Fabric

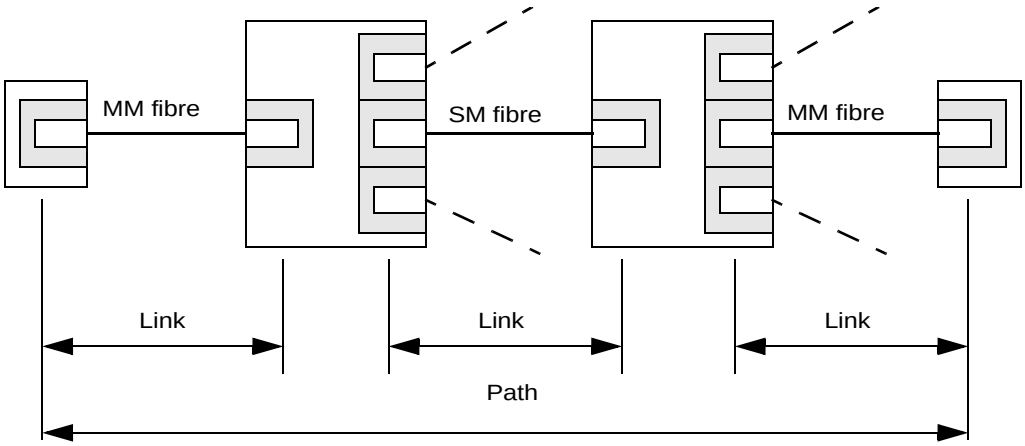

Figure 5 – FC-0 Path

Copyright International Organization for Standardization
Provided by IHS under license with ISO
No reproduction or networking permitted without license from IHS
Not for Resale

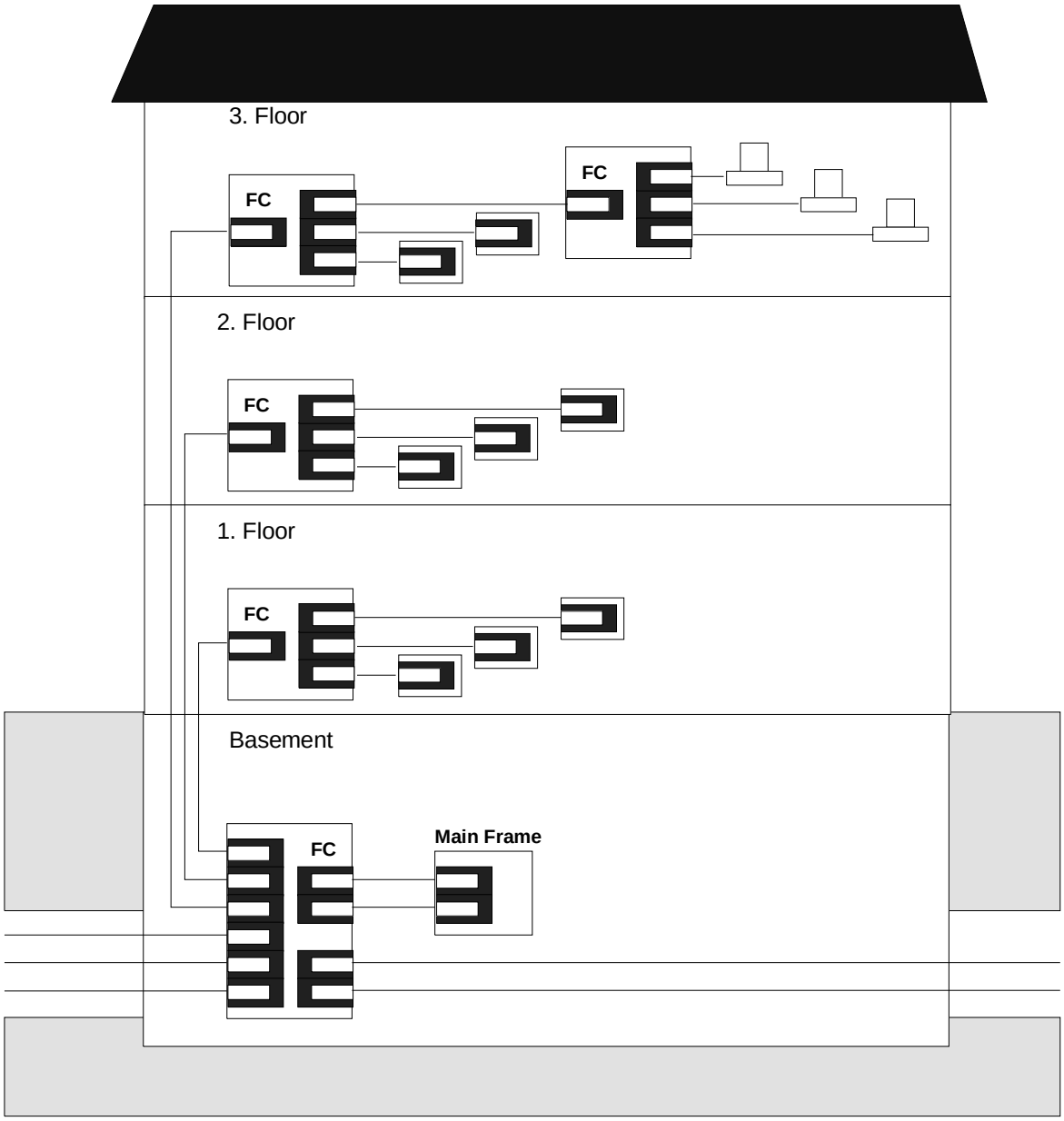

Figure 6 – Fibre channel building wiring

4.3 FC-0 interface overview

The interoperability points are shown in figures 9, 10, 11 and 12. The "α" points are for reference only.

The nomenclature used by FC-PI to reference various combinations of components is defined in clause 5.

The link distance capabilities specified in FC-PI are based on ensuring interoperability across multiple vendors supplying the technologies (both transceivers and cable plants) under the tolerance limits specified in FC-PI. Greater link distances may be obtained by specifically engineering a link based on knowledge of the technology characteristics and the conditions under which the link is installed and operated. However, such link distance extensions are outside the scope of FC-PI.

Copyright International Organization for Standardization
Provided by IHS under license with ISO
No reproduction or networking permitted without license from IHS Not for Resale

4.4 Data flow stages

Figure 7 illustrates an example of data flow stages of 32-bit word parallel, 8-bit byte parallel, 10-bit character parallel and bit serial streams and vice versa. This example of transmitter to receiver data flow is for reference only and is implementation dependent.

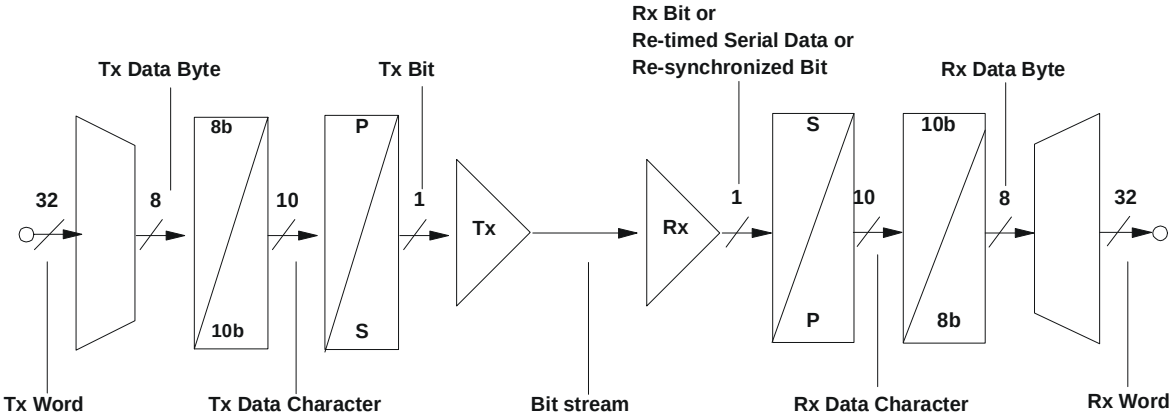

Legend:
Tx - transmitter
Tx Word - 32 bit transmit word
Tx Byte - 8 bit transmit byte
Tx Bit - 1 transmit bit
P - parallel side

Rx - Receiver
Rx Word - 32 bit receive word
Rx Byte - 8 bit receive byte
Rx Bit - 1 receiver bit
S - serial side

Figure 7 – Data flow stages

--`,,```,,,,````-`-`,,`,,`,`,,`---

Copyright International Organization for Standardization
Provided by IHS under license with ISO
No reproduction or networking permitted without license from IHS
Not for Resale

5 FC-PI functional characteristics

5.1 General

FC-PI describes the physical link, the lowest level, in the Fibre Channel system. It is designed for flexibility and allows the use of several physical interconnect technologies to meet a wide variety of system application requirements.

5.2 General characteristics

The FC-FS protocol is defined to operate across connections having a bit error rate (BER) detected at the receiving port of less than 10^{-12}. It is the combined responsibility of the component suppliers and the system integrator to ensure that this level of service is provided at every port in a given Fibre Channel installation.

FC-PI has the following general characteristics.

In the physical media signals a logical “1” shall be represented by the following properties:

- Optical - the state with the higher optical power
- Unbalanced copper - the state where the ungrounded conductor is more positive than the grounded conductor
- Balanced copper - the state where the conductor identified as “+” is more positive than the conductor identified as “-”

Serial data streams are supported at signaling rates of 2,12 GBd and 4,25 GBd in addition to the signaling rate of 1,06 GBd. All signaling rates have transmitter and receiver clock tolerances of ±0,01 %. A TxRx Connection bit error rate (BER) of $\leq 10^{-12}$ as measured at its receiver is supported. The basis for the BER is the encoded serial data stream on the transmission medium during system operation.

FC-PI defines eight different specific physical locations in the FC system that include six interoperability points and two reference points. No interoperability points are required for closed or integrated links and FC-PI is not required for such applications. For closed or integrated links the system designer shall ensure that the end to end BER required by FC-FS is delivered.

The requirements specified in FC-PI shall be satisfied at separable connectors where interoperability and component level interchangeability within the link are expected. A compliant point is a physical position where the specification requirements are met. For purposes of this document the terms “compliance point” and “interoperability point” are equivalent. The specified interoperability points are defined at separable connectors as these are the points where different components can easily be added, changed or removed. The reference points are the α points. There is no maximum number of interoperability points between the initiating FC device and the addressed FC device as long as (1) the requirements at the interoperability points are satisfied for the respective type of interoperability point and (2) the end to end signal properties are maintained under the most extreme allowed conditions in the system. The description and physical location of the specified interoperability points and reference points are detailed in 5.10.

It is the combined responsibility of the component (the separable hardware containing the connector portion associated with an interoperability point) supplier and the system integrator to ensure that intended interoperability points are identified to the users of the components and system. This is required because not all connectors in a link are interoperability points and similar connectors and connector positions in different applications may not satisfy the FC-PI requirements.

The requirements in this document apply with the system fully active, including duplex traffic on all ports and under all applicable environmental conditions.

The interface to FC-FS occurs at the logical encoded data interfaces. As these are logical data constructs, no physical implementation is implied by FC-FS. FC-PI is written assuming that the same single serial data stream exists throughout the link as viewed from the interoperability points. Other possible schemes for transmitting data, for example using parallel paths, are not defined in FC-PI but could occur at intermediate places between interoperability points.

Physical links have the following general requirements:

--`,,```,,,,````-`-`,,`,,`,`,,`---

Copyright International Organization for Standardization
Provided by IHS under license with ISO
No reproduction or networking permitted without license from IHS Not for Resale

a) Physical point-to-point data links; no multidrop attachments along the serial path.

b) Every signal shall meet the timing and amplitude requirements associated with its interoperability point under the most extreme specified conditions of system noise and input signal degradation.

c) All users are cautioned that detailed specifications shall take into account end-of-life worst case values (e.g., manufacturing, temperature, power supply).

The interface between FC-PI and FC-FS is intentionally structured to be technology and implementation independent. That is, the same set of commands and services may be used for all signal sources and communication schemes applicable to the technology of a particular implementation. As a result of this, all safety or other operational considerations which may be required for a specific communications technology are to be handled by the FC-PI clauses associated with that technology. An example of this would be ensuring that optical power levels associated with eye safety are maintained.

5.3 FC-0 States

5.3.1 Transmitter FC-0 states

The transmitter is controlled by the FC-1 level. Its function is to convert the serial data received from the FC-1 level into the proper signal types associated with the transmission media.

The transmitter has the following states:

a) **Transmitter Not-Enabled State**: A not-enabled state is defined as optical output off for optical transmitters. Electrical transmitters in the not-enabled state shall not launch dynamic voltages exceeding the limits specified as Transmitter off voltage in table 20. A transmitter shall be in the not-enabled state at the completion of its power on sequence unless the transmitter is specifically directed otherwise by the FC-1 level.

b) **Transmitter Enabled State**: The transmitter is in an enabled state when the transmitter is capable of operation within its specifications while sending valid bit sequences.

c) **Transmitter Failure State**: Some types of transmitters are capable of monitoring themselves for internal failures. Examples are laser transmitters where the monitor diode current may be compared against a reference to determine a proper operating point. Other transmitters, such as Light Emitting Diodes and electrical transmitters do not typically have this capability. If the transmitter is capable of performing this monitoring function then detection of a failure shall cause entry into the transmitter failure state.

d) **Transition between Transmitter Not-Enabled and Transmitter Enabled States**: This transition is not specified in this document. However, see annex D for implementation examples.

5.3.2 Receiver States

The function of the receiver is to convert the incoming data from the form required by the communications media employed, retime the data and present the data and an associated clock to the FC-1 level. The receiver has no states.

5.4 Response to input data phase jumps

Some link_control_facilities may detect phase discontinuities in the incoming serial data stream. This may occur for example from the operation of an asynchronous serial switch at the transmitter. In the event of a phase discontinuity, the recovery characteristics of the receiver shall be as follows:

- Phase jump - Uniform distribution between ±180°.
- Link - Worst case
- Degree of recovery - Within BER objective (10^{-12})
- Probability of recovery - 95 %
- Recovery time - 2 500 bit intervals from last phase jump

Additional wait time before next phase jump: None

Copyright International Organization for Standardization
Provided by IHS under license with ISO
No reproduction or networking permitted without license from IHS Not for Resale

The FC-0 level shall require no intervention from higher levels to perform this recovery. If, at the end of the specified time, the higher levels determine that bit synchronization is not present these levels may assume a fault has occurred and take appropriate action.

5.5 Limitations on invalid code

FC-0 does not detect transmit code violations, invalid ordered sets or any other alterations of the encoded bit stream. However, it is recognized that individual implementations may wish to transmit such invalid bit streams to provide diagnostic capability at the higher levels. Any transmission violation, such as invalid ordered sets, which follow valid character encoding rules shall be transparent to FC-0. Invalid character encoding could possibly cause a degradation in receiver sensitivity and increased jitter resulting in increased BER or loss of bit synchronization.

During testing the FC-0 level should remain synchronized and meet BER requirements if the transmitted bit stream meets the following requirements. The code balance in any 10 bits is in the range 40 % to 60 %. For example the pattern “1010110101” has 6 1’s in a total of 10 bits yielding a code balance of 6/10 = 60 %. The maximum run length is limited to 12 in 20 bits, for example 00111 11111 11110 01100 has a run length of 12. A run length of 12 in 20 consecutive bits shall occur not more than once in any contiguous set of 320 bits. The other 300 bits shall have a code balance between 49,5 % and 50,5 %. and the run length shall be limited to 5 bits.

5.6 Receiver initialization time

The time interval required by the receiver from the initial receipt of a valid input to the time that the receiver is synchronized to the bit stream and delivering valid retimed data within the BER requirement, shall not exceed 1 ms. Should the retiming function be implemented in a manner that requires direction from a higher level to start the initialization process, the time interval shall start at the receipt of the initialization request.

5.7 Loss of signal (Rx_LOS) function

The FC-0 may optionally have a loss of signal function. This function is logically inverted from the signal detect function in FC-PI. If implemented, this function shall indicate when a signal is absent at the input to the receiver. The activation level shall lie in a range whose upper bound is the minimum specified sensitivity of the receiver and whose lower bound is defined by a complete removal of the input connector. While there is no defined hysteresis for this function there shall be a single transition between output logic states for any monotonic increase or decrease in the input signal power occurring within the reaction time of the signal detect circuitry. The reaction time to the input signal is defined in annex D.

5.8 Speed agile Ports that support Speed Negotiation

This clause specifies the requirements on speed agile Ports that support speed negotiation.

a) Ports shall not attain Transmission_Word synchronization unless the incoming signal is within ±10 % of the receive rate set by the Port implementing the algorithm.

b) The Port transmitter shall be capable of switching from compliant operation at one speed to compliant operation at a new speed within 1 ms from the time the Speed Negotiation algorithm asks for a speed change.

c) The Port receiver shall attain Transmission_Word synchronization within 1 ms when presented with a valid input stream as specified in 5.6 if the input stream is at the receive rate set by the Port implementing the Speed Negotiation algorithm - the receiver shall also be capable of attaining Transmission_Word synchronization when presented with a valid input stream within 1 ms from the time the algorithm asks for a receiver speed change if the input stream is at the new receive rate set by the Port implementing the algorithm.

d) The Port transmitter and Port receiver shall be capable of operating at different speeds at the same time during Speed Negotiation.

Copyright International Organization for Standardization
Provided by IHS under license with ISO
No reproduction or networking permitted without license from IHS Not for Resale

5.9 FC-PI nomenclature

The nomenclature for the technology options is illustrated in figure 8.

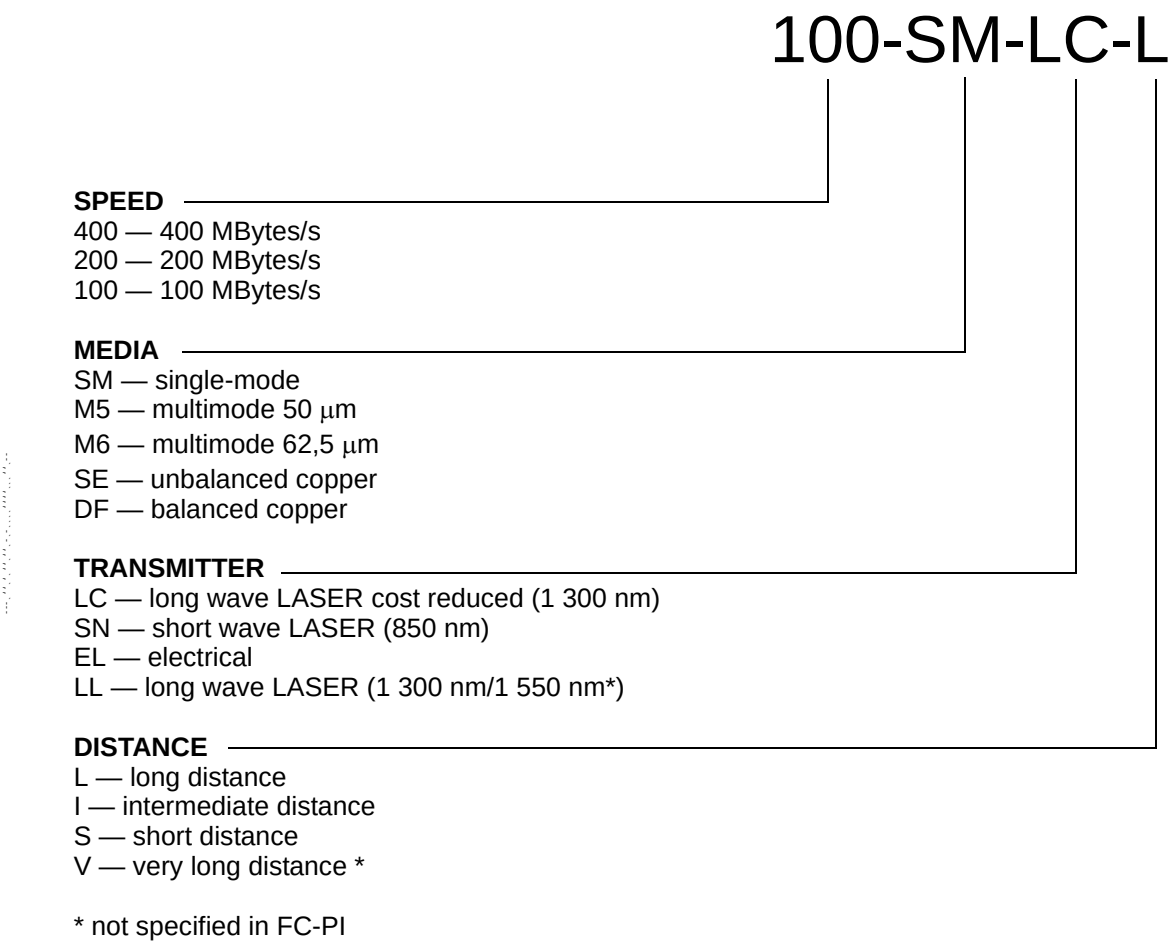

NOTE The acronym “LC” when used with the “LC” connector and when used to describe the “LC” optical transmission variant are not related.

Figure 8 – FC variant nomenclature

5.10 Interoperability points

This clause contains examples of interoperability points in various configurations. These examples are useful to illustrate how the definitions of the interoperability and reference points may appear in practical systems. This clause also shows an illustration of the two different signal specification environments defined in FC-PI, intra enclosure and inter enclosure, with all the different configurations of interoperability points that are possible within the same link.

Interoperability at the points defined requires satisfying both the specified physical location and the specified signal requirements. If either are missing then the interface becomes a non-interoperable interface for that point in the link only - the link could still satisfy the requirements for end to end operation even if intermediate points do not meet the interoperability requirements. Durable identification is required for all points in the link that are expected to be interoperability points (in user documentation for example).

Figure 9 shows details of an implementation involving FC devices contained within an enclosure. It also shows where active components not specified in FC-PI may be required to complete the link between the intra enclosure and inter enclosure environments.

Copyright International Organization for Standardization
Provided by IHS under license with ISO
No reproduction or networking permitted without license from IHS Not for Resale

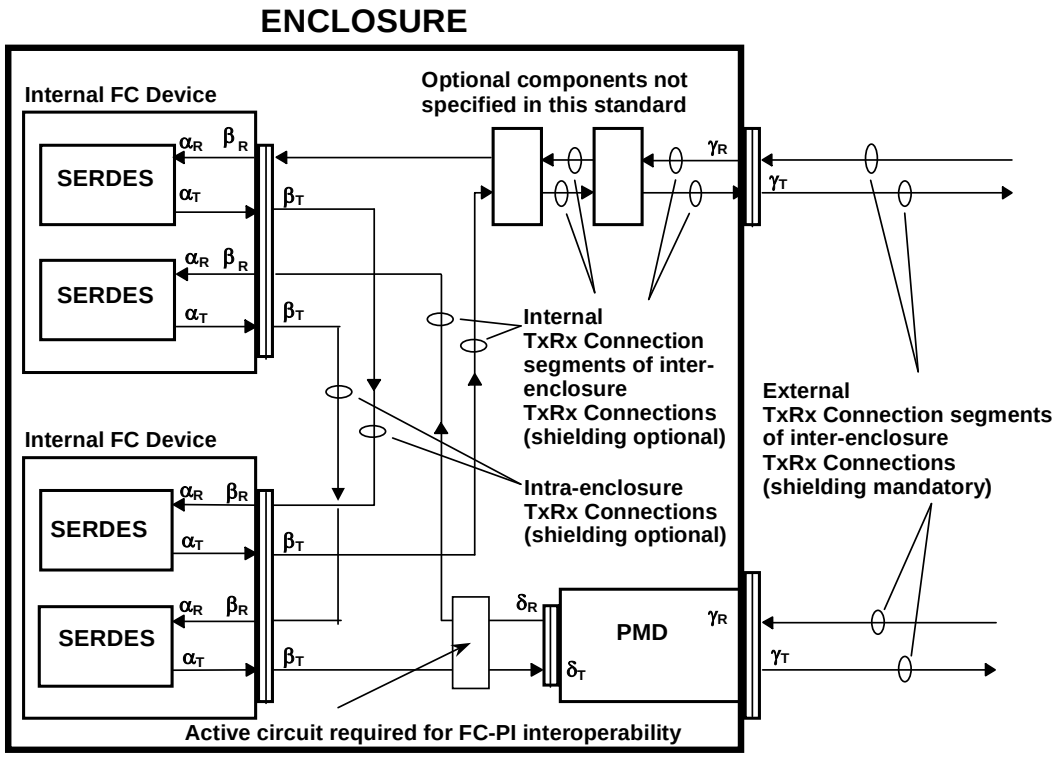

Figure 9 – Example of physical location of reference and interoperability points

Copyright International Organization for Standardization
Provided by IHS under license with ISO
No reproduction or networking permitted without license from IHS
Not for Resale

Figure 10 shows another example of a complete duplex link between a host system adapter and a disk drive both with and without δ points.

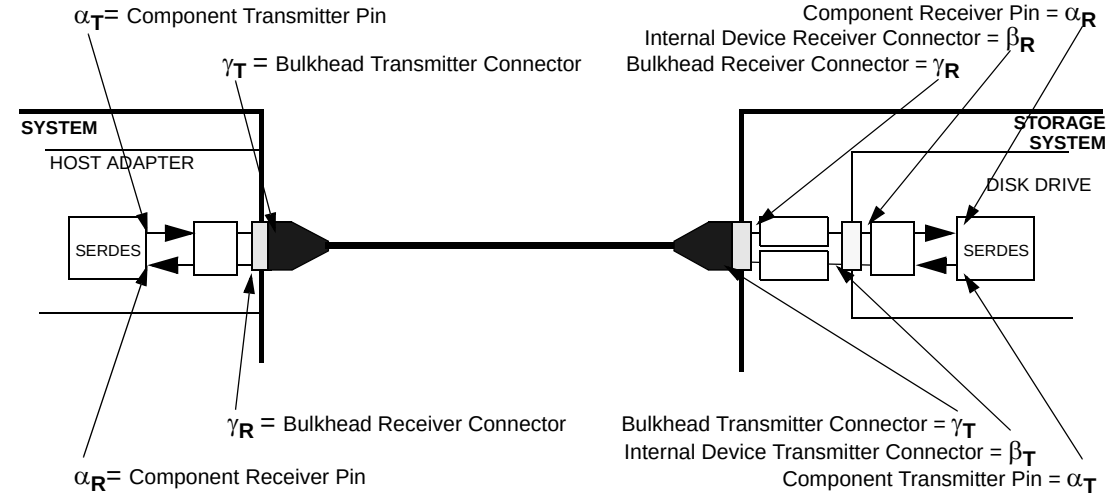

Without use of internal δ connectors

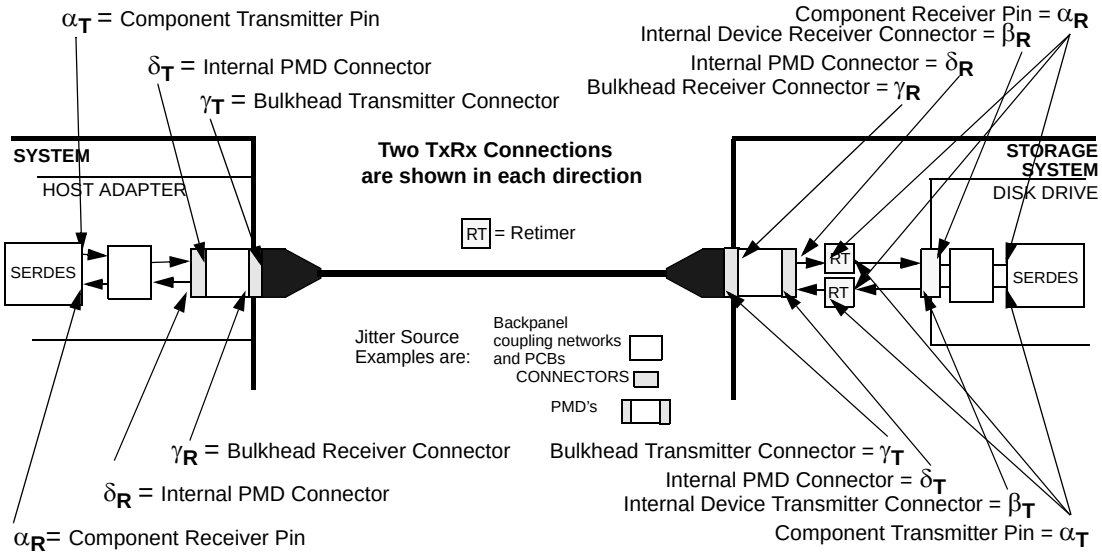

With use of internal connectors and retimers

NOTE α **is a reference point, not an interoperability point**

Figure 10 – Use of internal connectors and retimers

--`,,```,,,,````-`-`,,`,,`,`,,`---

Copyright International Organization for Standardization
Provided by IHS under license with ISO
No reproduction or networking permitted without license from IHS Not for Resale

Figure 11 and 12 show more detailed examples of the Tx and Rx ends of simplex links with pointers to the physical location of the interoperability and reference points.

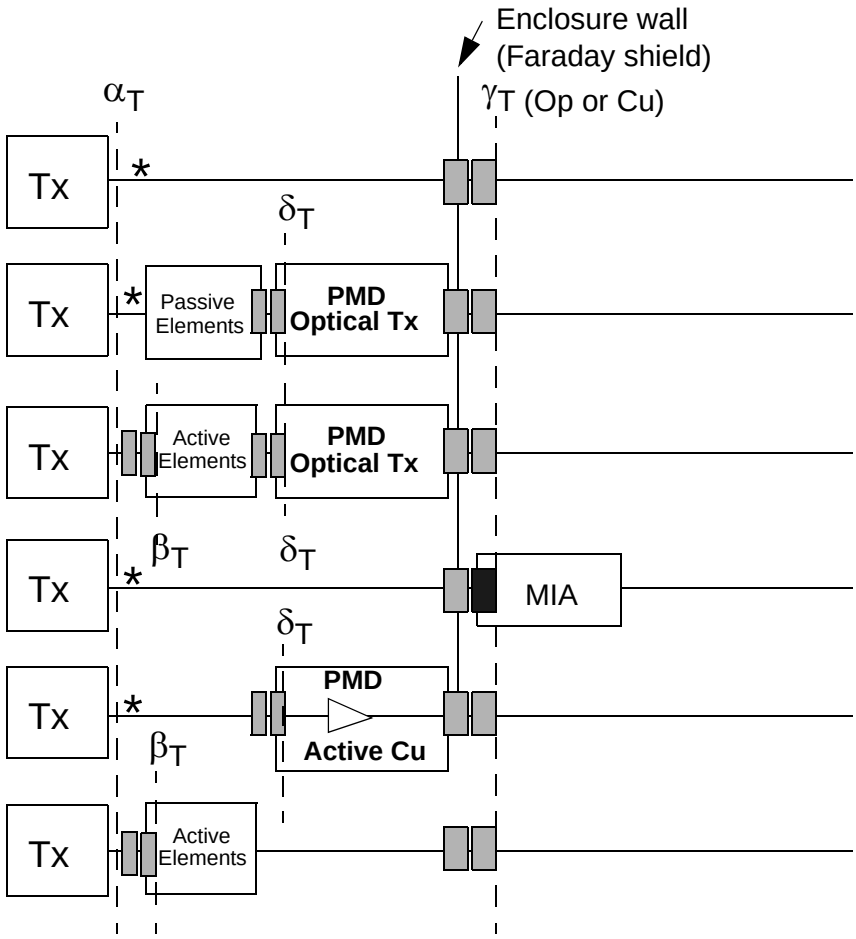

*** Inter-enclosure configurations with β points require active circuits for FC-PI interoperability between β and δ or, if no δ point exists, between β and γ. Tx indicates a SERDES and associated transmitter.**

Figure 11 – Tx interoperability points (examples)

Copyright International Organization for Standardization
Provided by IHS under license with ISO
No reproduction or networking permitted without license from IHS
Not for Resale

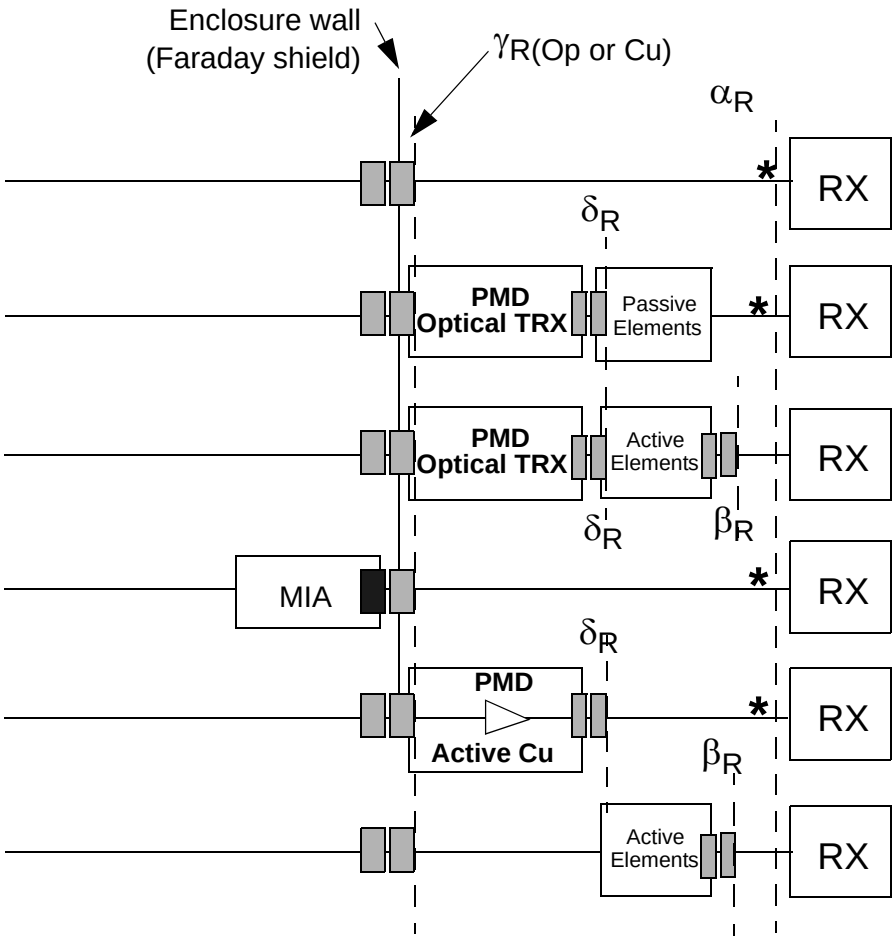

*** Inter-enclosure configurations with β points require active circuits for FC-PI interoperability between β and δ or, if no δ point exists, between β and γ. RX indicates a SERDES and associated receiver.**

Figure 12 – Rx interoperability points (examples)

Copyright International Organization for Standardization
Provided by IHS under license with ISO
No reproduction or networking permitted without license from IHS
Not for Resale

Figure 13 shows an example of a loop configuration that includes an external Retiming hub. Similar configurations that do not have Retiming elements in the hub will not have γ points associated with the hub external connectors.

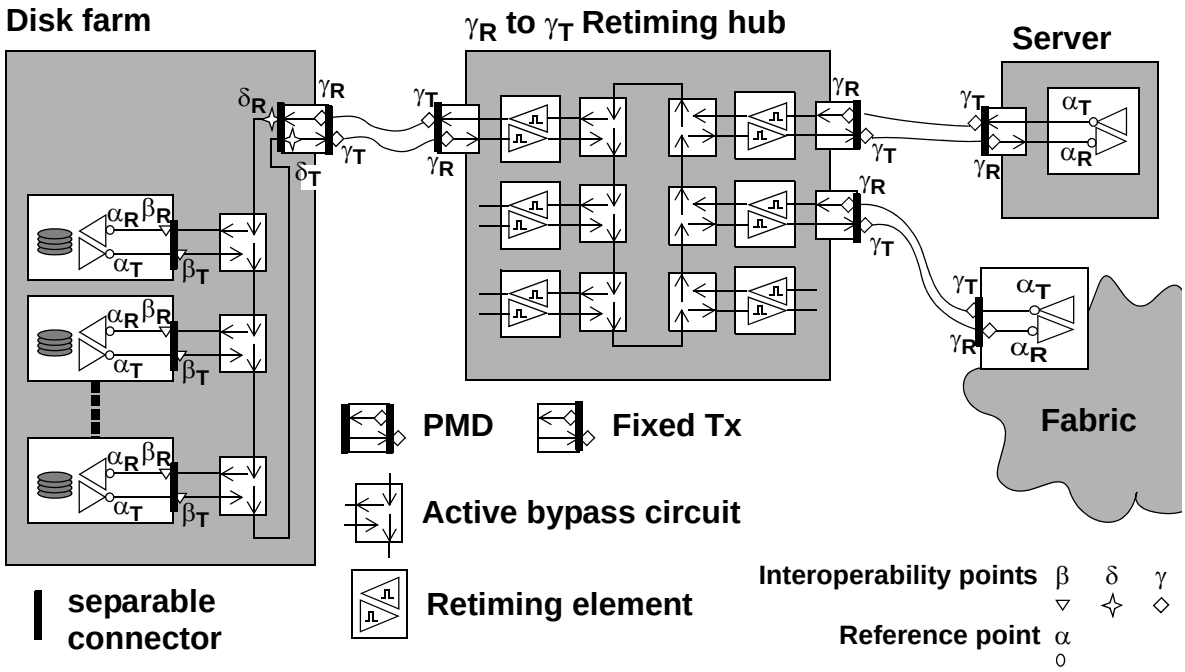

Figure 13 – Hub interoperability points (example)

Copyright International Organization for Standardization
Provided by IHS under license with ISO
No reproduction or networking permitted without license from IHS
Not for Resale

Figure 14 shows examples of fabric and point to point configurations. For clarity, only simplex connections are illustrated.

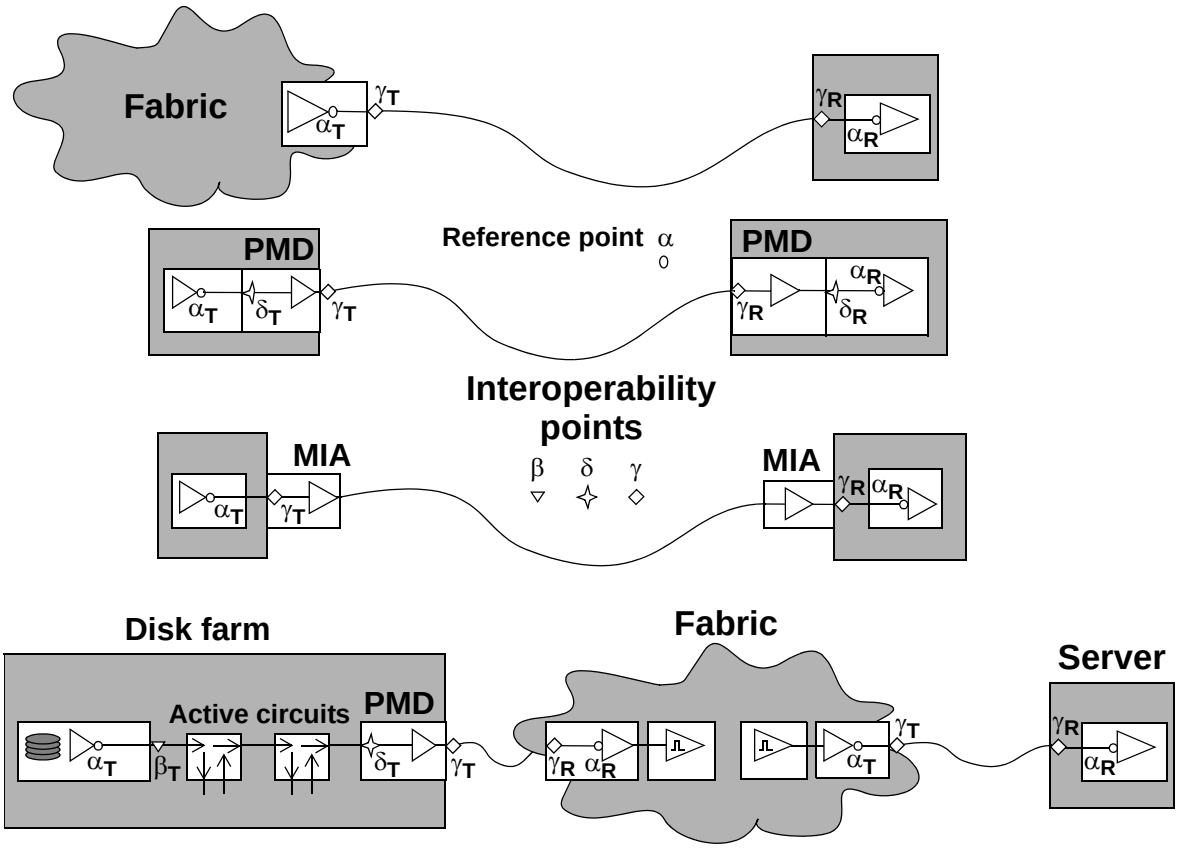

Figure 14 – Examples of interoperability points

The α points are at the pads of the package containing the SERDES. The β points are at the downstream side of the separable connectors nearest the SERDES of the internal FC device. The δ points are at the downstream side of the separable connector inside the enclosure nearest the γ points. The γ points are at the downstream side of the external connector on the enclosure. The enclosure is the EMC shielded boundary (Faraday shield) for the components.

The signal requirements at each interoperability point are specified in the clauses of this document that define the requirements for the variant.

Copyright International Organization for Standardization
Provided by IHS under license with ISO
No reproduction or networking permitted without license from IHS
Not for Resale

Figure 15 shows an overview of the signal specification architecture used in FC-PI. The two largely independent environments, the requirement for active circuit isolation and the possible combinations of interoperability points in a link are related as shown in figure 15.

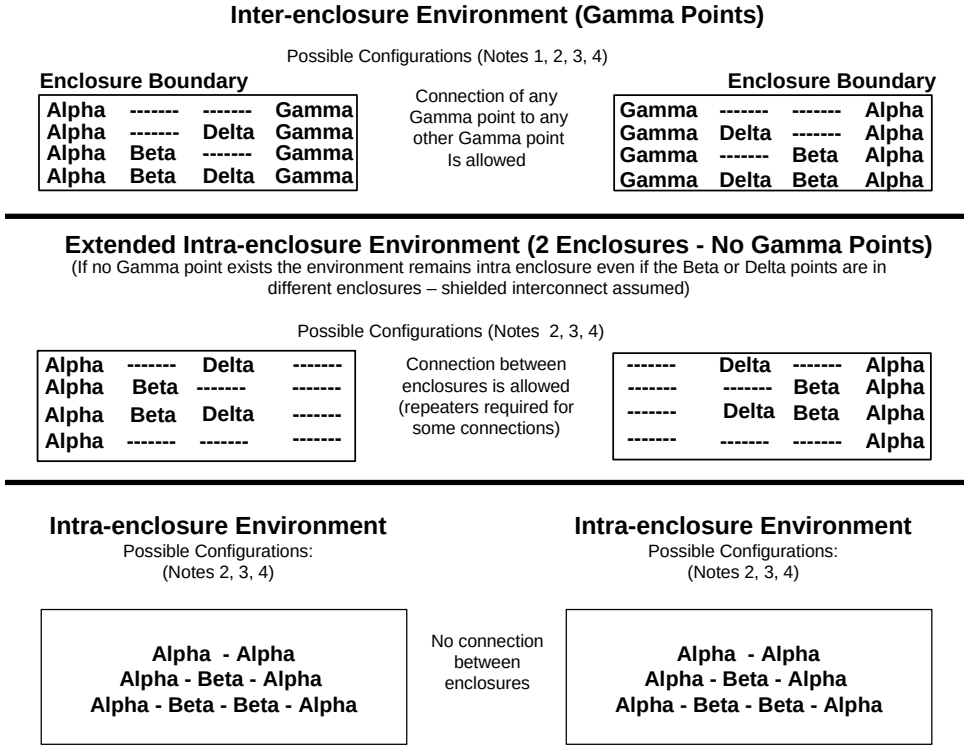

Note 1 Repeaters are required in the enclosure when the enclosure includes both Beta and Gamma points in the same link -- Repeaters preserve independent amplitude budgets for both intra and inter environments. f Retimers are used to provide this function, independent jitter budgets are also preserved.

Note 2 Signal requirements for Alpha points associated with Beta points or intra-enclosure Alpha to Alpha configurations may be different from the signal requirements for Alpha points associated with Delta or Gamma points. No specifications are given for Alpha points in FC-PI-2. Alpha points only exist with enclosures.

Note 3 As required by the application, a Retimer may be inserted at any interoperability point in a configuration for purposes of compliance conversion to any other interoperability point.

Note 4 The configuration on the left is independent of that on the right and vice versa.

Figure 15 – Overview of the signal specification architecture

Copyright International Organization for Standardization
Provided by IHS under license with ISO
No reproduction or networking permitted without license from IHS
Not for Resale

5.11 FC-PI technology options

FC-PI provides for a variety of technology options. Table 5 lists variants by name and FC-PI nomenclature, a reference to the clause containing the detailed requirements and some key parameters that characterize the variant.

Table 5 – FC-PI technology options

	100	**200**	**400**
SM	**100-SM-LC-L** Subclause 6.3 SM 1 300 nm 2 m to 10 km	**200-SM-LC-L** Subclause 6.3 SM 1 300 nm 2 m to 10 km	**400-SM-LC-L** Subclause 6.3 SM 1 300 nm 2 m to 10 km
MM 50 μm	**100-M5-SN-I** Subclause 6.4 MM 780/850 nm 0,5 m to 500 m	**200-M5-SN-I** Subclause 6.4 MM 850 nm 0,5 m to 300 m	**400-M5-SN-I** Subclause 6.4 MM 850 nm 0,5 m to 150 m
MM 62,5 μm	**100-M6-SN-I** Subclause 6.4 MM 780/850 nm 0,5 m to 300 m	**200-M6-SN-I** Subclause 6.4 MM 850 nm 0,5 m to 150 m	**400-M6-SN-I** Subclause 6.4 MM 850 nm 0,5 m to 70 m
EL Unbalanced	**100-SE-EL-S** Clause 9 Length depends on unbalanced media	**200-SE-EL-S** Clause 9 Length depends on unbalanced media	
EL Balanced	**100-DF-EL-S** Clause 9 Length depends on balanced media	**200-DF-EL-S** Clause 9 Length depends on balanced media	

The lengths specified in table 5 are the minimum lengths supported with transmitters, media and receivers all simultaneously operating under the most degraded conditions allowed. Longer lengths may be achieved by restricting parameters in the transmitter, media or receiver. If such restrictions are used on the link components then interoperability at interoperability points within the link and component level interchangeability within the link is no longer supported by this standard

Copyright International Organization for Standardization
Provided by IHS under license with ISO
No reproduction or networking permitted without license from IHS Not for Resale

6 Optical interface specification

6.1 General

This clause defines the optical signal characteristics at the interface connector. Each conforming optical FC attachment shall be compatible with this optical interface to allow interoperability within an FC environment. Fibre Channel links shall not exceed the BER objective (10^{-12}) under any conditions. The parameters specified in this clause support meeting that requirement under all conditions including the minimum input power level. The corresponding cable plant specifications are described in clause 8.

A link or TxRx Connection, may be divided into TxRx Connection Segments (see figure 9). In a single TxRx Connection individual TxRx Connection Segments may be formed from differing media and materials, including traces on printed wiring boards and optical fibres. This clause applies only to TxRx Connection Segments that are formed from optical fibre.

If electrically conducting TxRx Connection Segments are required to implement these optical variants, they shall meet the specifications of the appropriate electrical variants defined in clauses 9 and 10.

6.2 Laser safety issues

a) The optical output shall not exceed Class 1 maximum permissible exposure limits under any conditions of operation, including open transmitter bore, open fibre and reasonable single fault conditions as specified in IEC 60825-1.

b) All laser safety standards and regulations require that the manufacturer of a laser product provide information about a product's laser, safety features, labeling, use, maintenance and service.

6.3 SM data links

6.3.1 General

Table 6 gives the gives the variant names, a general link description and the γ compliance point specifications for 10 km single-mode optical fibre links running at 1,06 GBd; 2,12 GBd and 4,25 GBd.

6.3.2 SM optical output interface

The optical transmit signal is defined at the output end of a patch cord between two and five meters in length, of a type specified in 8.1.1.

The general laser transmitter pulse shape characteristics are specified in the form of a mask of the transmitter eye diagram at point γ_T (see 5.10). These characteristics include rise time, fall time, pulse overshoot, pulse undershoot and ringing, all of which shall be controlled to prevent excessive degradation of the receiver sensitivity. The parameters specifying the mask of the transmitter eye diagram are shown in figure 16. See IEC 61280-2-2.

If needed for conformance, the mask of the eye diagram for laser transmitters may be measured by the method of IEC 61280-2-2 using a reference receiver-oscilloscope combination having a fourth-order Bessel-Thomson transfer function given by:

$$H_P = \frac{105}{105 + 105y + 45y^2 + 10y^3 + y^4}$$

NOTE 1 This filter is not intended to represent the noise filter used within an optical receiver but it is intended to provide a uniform measurement condition.

Copyright International Organization for Standardization
Provided by IHS under license with ISO
No reproduction or networking permitted without license from IHS Not for Resale

With

$$y = 2{,}114p \qquad p = \frac{j\omega}{\omega_r} \qquad \omega_r = 2\pi f_r \qquad f_r = 0{,}75 \times \text{Bit Rate}$$

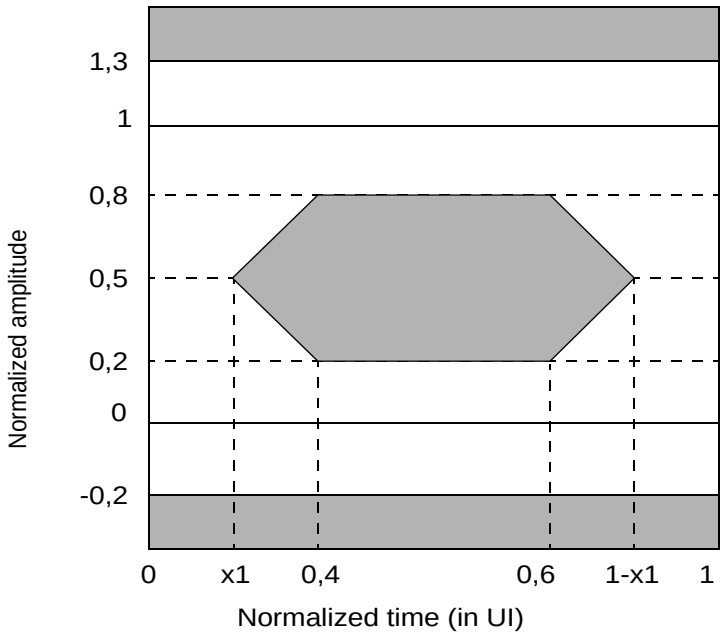

NOTE 2 X1 shall be half the value given for total jitter at the γ T point given in table 9. The test or analysis shall include the effects of a single pole high-pass frequency-weighting function, which progressively attenuates jitter at 20 dB/decade below a frequency of bit rate/1 667. The value for X1 applies at a total jitter probability of 10^{-12}. At this level of probability direct visual comparison between the mask and actual signals is not a valid method for determining compliance with the jitter output requirements.

Figure 16 – SM transmitter eye diagram mask

Copyright International Organization for Standardization
Provided by IHS under license with ISO
No reproduction or networking permitted without license from IHS
Not for Resale

Table 6 – Single-mode link classes

FC-0	Unit	100-SM-LC-L	200-SM-LC-L	400-SM-LC-L	NOTE
Subclause					
Data rate	MB/s	100	200	400	
Nominal signaling rate	MBd	1 062,5	2 125	4 250	
Rate tolerance	%	±0,01	±0,01	±0,01	10
Operating distance	m	2 to 10 000	2 to 10 000	2 to 10 000	
Fibre mode-field (core) diameter	μm				1
Transmitter (γ-T)					
Type		Laser	Laser	Laser	
Spectral centre wavelength, min.	nm				2
Spectral centre wavelength, max.	nm				2
RMS spectral width, max.	nm				2
Average launched power, max.	dBm				3
Average launched power, min.	dBm	-9,5	-11,7	-8,4	4
Optical modulation amplitude, min.	mW				2, 5
Rise/Fall time (20 % to 80 %), max.	ps	320	160	80	6
RIN_{12} (OMA), max.	dB/Hz	-116	-117	-118	7
Receiver (γ-R)					
Average received power, max.	dBm	-3	-3	-1	
Optical modulation amplitude, min.	mW	0,015	0,015	0,029	7, 9
Return loss of receiver, min.	dB	12	12	12	
Receiver electrical 3 dB upper cutoff frequency, max.	GHz	1,5	2,5	5,0	8
Receiver electrical 10 dB upper cutoff frequency, max.	GHz	3	6	12	8

NOTE 1 See: IEC 60793-2

NOTE 2 Trade-offs are available between spectral centre wavelength, RMS spectral width and minimum optical modulation amplitude. See figure 18 to figure 20.

NOTE 3 Lesser of class 1 laser safety limits (IEC 60825-1) or receiver power, max.

NOTE 4 The value for 100-SM-LC-L is calculated using a 9 dB extinction ratio. The values for 200-SM-LC-L and 400-SM-LC-L are calculated using an infinite extinction ratio at the lowest allowed transmit OMA.

NOTE 5 Optical modulation amplitude values are peak-to-peak. See A.6.

NOTE 6 Optical rise and fall time specifications are based on the unfiltered waveforms. For the purpose of standardizing the measurement method, measured waveforms shall conform to the mask as defined in figure 16. If a filter is needed to conform to the mask the filter response effect should be removed from the measured rise and fall times using the equation:

$T_{RISE/FALL} = [(T_{RISE/FALL_MEASURED})^2 - (T_{RISE/FALL_FILTER})^2]^{1/2}$

The optical signal may have different rise and fall times. Any filter should have an impulse response equivalent to a fourth order Bessel-Thomson filter. See A.2.2.2.

NOTE 7 See A.5.

NOTE 8 See A.8.

NOTE 9 See A.7.

NOTE 10 The data rate shall not exceed ± 0,01 % from the nominal data rate over all periods equal to 200 000 transmitted bits (~10 max. length frames).

Copyright International Organization for Standardization
Provided by IHS under license with ISO
No reproduction or networking permitted without license from IHS Not for Resale

The nominal attenuation at the reference frequency, f_r, is 3 dB. The corresponding attenuation and group delay distortion at various frequencies are given in table 7 and table 8.

Table 7 – Transmit pulse noise filter

f/f_0	f/f_r	Attenuation dB	Distortion UI
0,15	0,2	0,1	0
0,3	0,4	0,4	0
0,45	0,6	1,0	0
0,6	0,8	1,9	0,002
0,75	1,0	3,0	0,008
0,9	1,2	4,5	0,025
1,0	1,33	5,7	0,044
1,05	1,4	6,4	0,055
1,2	1,6	8,5	0,10
1,35	1,8	10,9	0,14
1,5	2,0	13,4	0,19
2,0	2,67	21,5	0,30

Table 8 – Tx Pulse Noise Filter Attenuation Tolerance

Reference frequency f/f_r	Attenuation tolerance Δa (dB)
0,1 to 1,00 1,00 … 2,00	+ 0,5 +0,5 … +3,0
NOTE Intermediate values of Δa are to be linearly interpolated on a logarithmic frequency scale.	

The mask of the eye diagram is intended to define the limits of overshoot, undershoot and ringing of the transmitted optical signal. The eye mask diagram is not to be used for determining compliance with the specifications for rise/fall time and jitter.

Optical modulation amplitude is defined as the difference in optical power between a logic-1 and a logic-0. For more information on testing OMA, see A.6.

The optical power measurement shall be made by the methods of IEC 61280-1-1. The measurement may be made with the port transmitting an idle sequence or other valid Fibre Channel traffic.

6.3.3 SM optical input interface

The receiver shall operate within the BER objective (10^{-12}) over the link's lifetime and temperature range when the input power falls in the range given in table 6 and when driven through a cable plant with a data stream that fits the eye diagram mask specified in figure 16. See IEC 61280-2-2.

6.3.4 SM jitter budget

This clause defines, for every interoperability point, the allowable jitter (see table 9) and the jitter tollerance (see table 10).

Receiver *TJ* and *DJ* shall comply to the listed values in table 9, over all allowable optical power input ranges and extinction ratios, as listed in table 6. Receiver test conditions should not incur the penalties that are already built into the link power budget.

Copyright International Organization for Standardization
Provided by IHS under license with ISO
No reproduction or networking permitted without license from IHS Not for Resale

Table 9 – SM jitter output, peak to peak, max.

100-SM-LC-L									
	Unit	α_T	β_T	δ_T	γ_T	γ_R	δ_R	β_R	α_R
Deterministic (*DJ*) [c]	UI	note 1	0,11	0,12	0,21	0,23	0,36	0,37	note 1
Total (*TJ*) [a, b, c]	UI	note 1	0,23	0,25	0,43	0,47	0,61	0,63	note 1
200-SM-LC-L									
	Unit	α_T		δ_T	γ_T	γ_R	δ_R		α_R
Deterministic (*DJ*)[c]	UI	note 1		0,14	0,26	0,28	0,39		note 1
Total (*TJ*)[a, b, c]	UI	note 1		0,26	0,44	0,48	0,64		note 1
400-SM-LC-L									
	Unit	α_T		δ_T	γ_T	γ_R	δ_R		α_R
Deterministic (*DJ*) [c]	UI	note 1		note 2	0,26	0,28	note 2		note 1
Total (*TJ*) [a, b, c]	UI	note 1		note 2	0,44	0,48	note 2		note 1

[a] Total jitter is the sum of deterministic jitter and random jitter. If the actual deterministic jitter is less than the maximum specified, then the random jitter may increase as long as the total jitter does not exceed the specified maximum total jitter.

[b] Total jitter is specified at the 10^{-12} probability.

[c] The deterministic and total values in this table apply to jitter after application of a single pole high-pass frequency-weighting function, which progressively attenuates jitter at 20 dB/decade below a frequency of bit rate/1667.

NOTE 1 Values at the α points are determined by the application.

NOTE 2 At the 4G speed FC-PI does not define the copper specifications needed to provide values for the δ points.

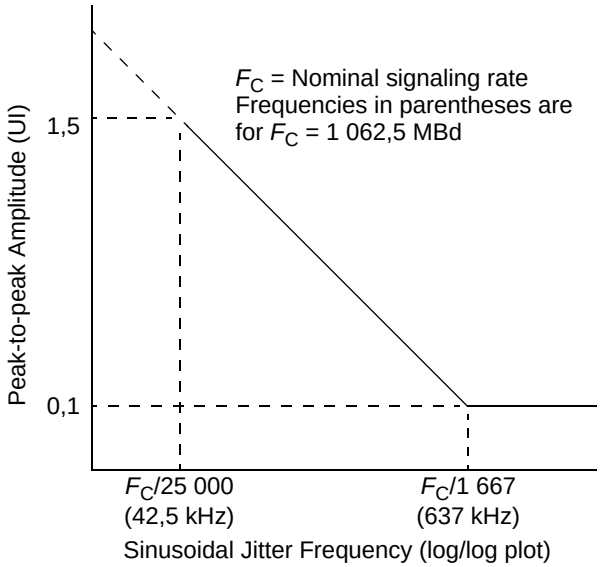

Figure 17 – Sinusoidal jitter mask

Copyright International Organization for Standardization
Provided by IHS under license with ISO
No reproduction or networking permitted without license from IHS
Not for Resale

Table 10 – SM jitter tolerance, peak to peak, min.

100-SM-LC-L									
	Unit	α_T	β_T	δ_T	γ_T	γ_R	δ_R	β_R	α_R
Sinusoidal swept frequency (*SJ*) 637 kHz [c] to > 5 MHz	UI	NA	0,10	0,10	0,10	0,10	0,10	0,10	note 2
Deterministic (*DJ*) 637 kHz to 531 MHz [d]	UI	NA	0,11	0,12	0,21	0,23	0,36	0,37	note 2
Total (*TJ*) [a, b, d]	UI	NA	0,28	0,30	0,48	0,52	0,66	0,68	note 2
200-SM-LC-L									
	Unit	α_T		δ_T	γ_T	γ_R	δ_R		α_R
Sinusoidal swept frequency (*SJ*) 1 274 kHz [c] to > 5 MHz	UI	NA		0,10	0,10	0,10	0,10		note 2
Deterministic (*DJ*) 1 274 kHz to 1 062 MHz [d]	UI	NA		0,14	0,26	0,28	0,39		note 2
Total (*TJ*) [a, b, d]	UI	NA		0,31	0,49	0,53	0,69		note 2
400-SM-LC-L									
	Unit	α_T		δ_T	γ_T	γ_R	δ_R		α_R
Sinusoidal swept frequency (*SJ*) 2 548 kHz [c] to > 5 MHz	UI	NA		note 1	0,10	0,10	note 1		note 2
Deterministic (*DJ*) 2 548 kHz to 2 124 MHz [d]	UI	NA		note 1	0,26	0,28	note 1		note 2
Total (*TJ*) [a, b, d]	UI	NA		note 1	0,49	0,53	note 1		note 2

[a] The jitter values given are normative for a combination of *DJ*, *RJ* and *SJ* which receivers shall be able to tolerate without exceeding a BER of 10^{-12}.

[b] No value is given for random jitter (*RJ*). For compliance with this specification, the actual random jitter amplitude shall be the value that brings total jitter to the stated value at a probability of 10^{-12}.

[c] Receivers shall tolerate sinusoidal jitter of progressively greater amplitude at lower frequencies, according to the mask in figure 17, combined with the same *DJ* and *RJ* levels used in the high frequency sweep.

[d] The deterministic and total values in this table apply to jitter after application of a single pole high-pass frequency-weighting function, which progressively attenuates jitter at 20 dB/decade below a frequency of bit rate/1 667.

NOTE 1 At the 400 speed this standard does not define the copper specifications needed to provide values for the δ points.

NOTE 2 Values at the α points are determined by the application.

--`,,```,,,,````-`-`,,`,,`,`,,`---

Copyright International Organization for Standardization
Provided by IHS under license with ISO
No reproduction or networking permitted without license from IHS Not for Resale

6.3.5 SM trade-offs

In order to meet the link power budget the transmitter can trade off OMA, spectral width and centre wavelength as shown in figures 18 to 20.

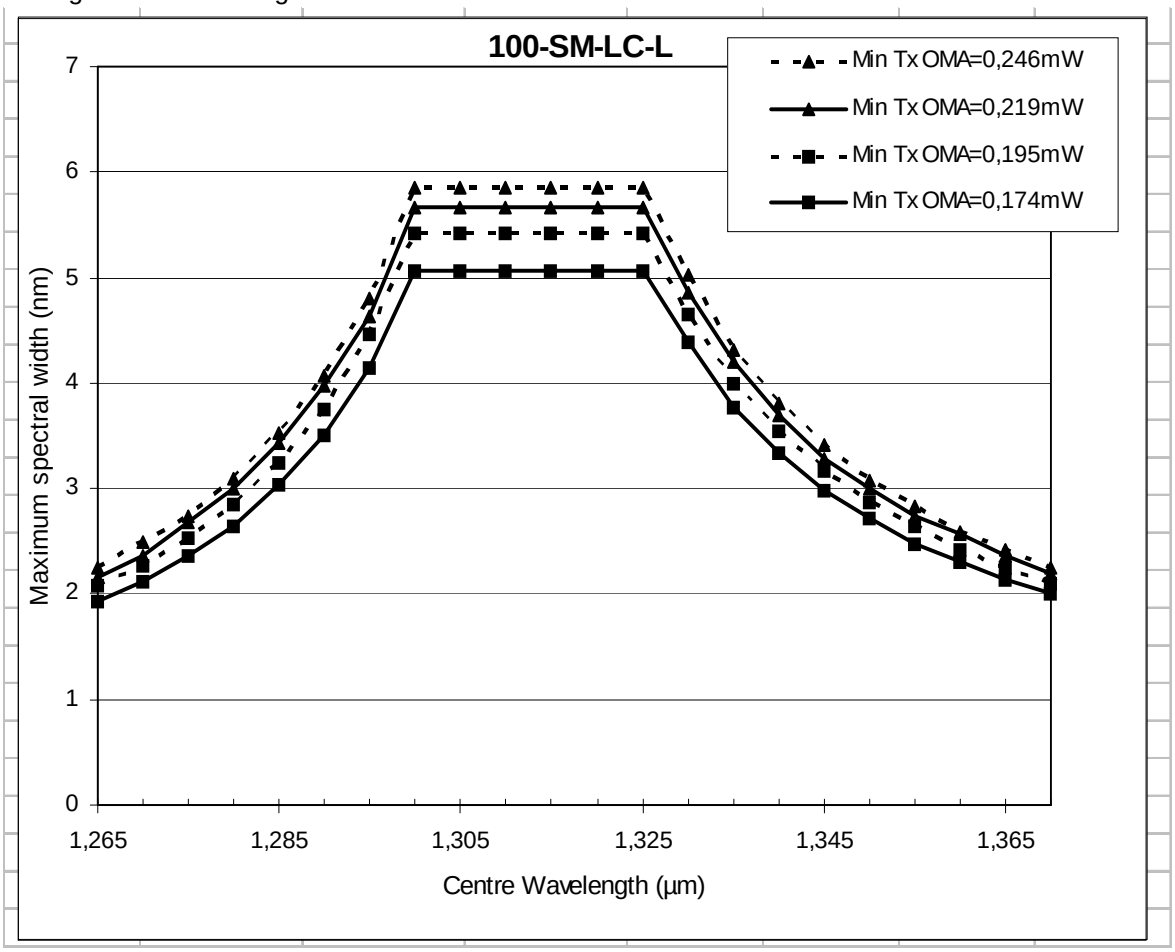

Figure 18 – 1,06 GBd SM 10 km link

Copyright International Organization for Standardization
Provided by IHS under license with ISO
No reproduction or networking permitted without license from IHS
Not for Resale

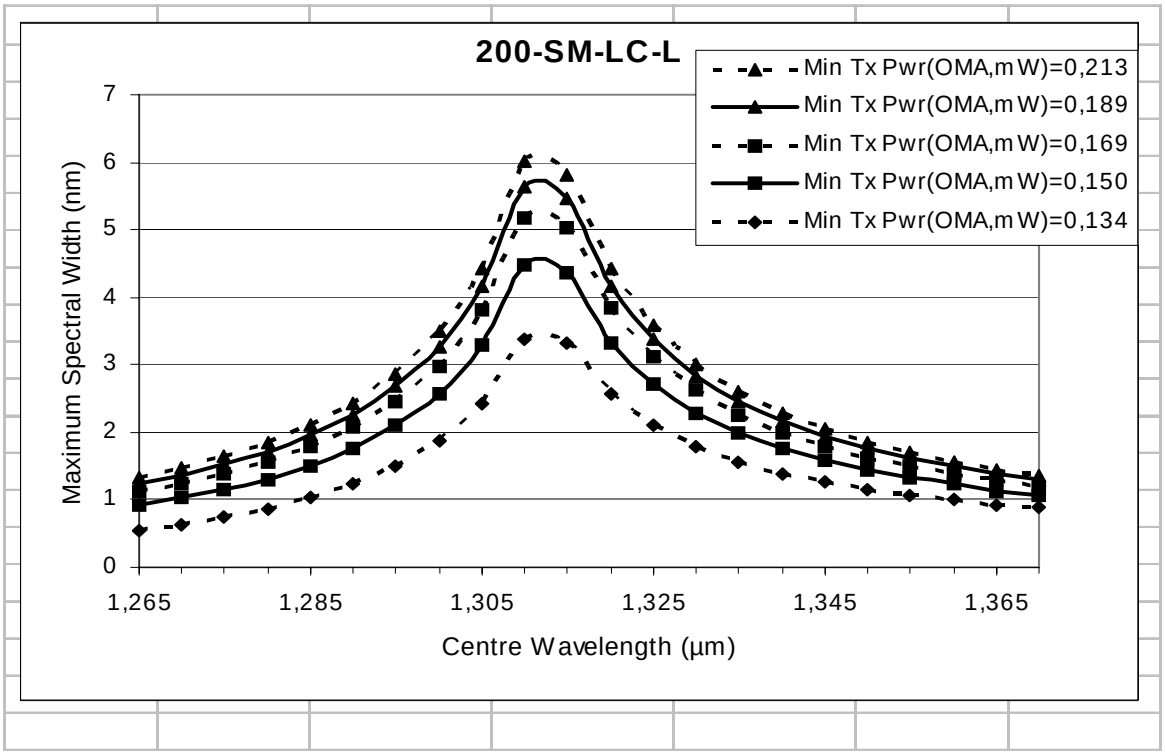

Figure 19 – 2,12 GBd SM 10 km link

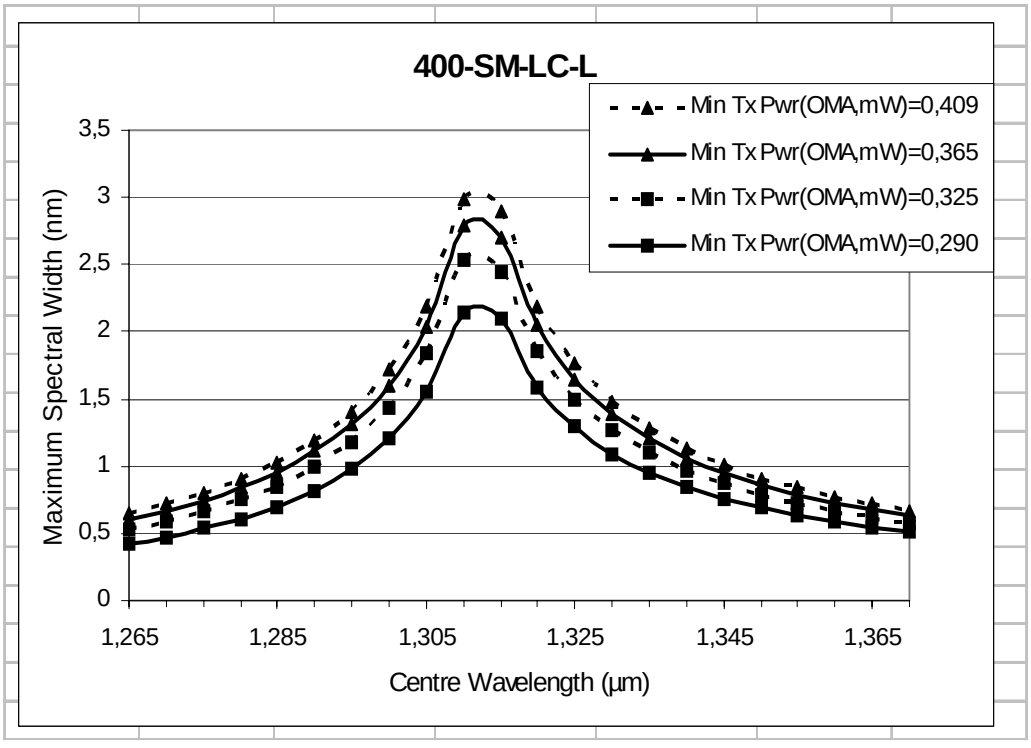

Figure 20 – 4,25 GBd SM 10 km link

Copyright International Organization for Standardization
Provided by IHS under license with ISO
No reproduction or networking permitted without license from IHS
Not for Resale

6.4 MM data links

6.4.1 General

Tables 13 and 14 give the variant names, a general link description and the γ compliance point specifications for multi-mode optical fibre links running at 1,06 GBd, 2,12 GBd and 4,25 GBd. The specifications in the tables are intended to allow compliance to class 1 laser safety.

6.4.2 MM optical output interface

The optical transmit signal shall comply with all requirements at the output end of any patch cord between one-half and five meters in length, of the relevant type specified in 8.2.2.

The general laser transmitter pulse shape characteristics are specified in the form of a mask of the transmitter eye diagram at point γ_T (see 5.10). These characteristics include rise time, fall time, pulse overshoot, pulse undershoot and ringing, all of which shall be controlled to prevent excessive degradation of the receiver sensitivity. The parameters specifying the mask of the transmitter eye diagram are shown in figure 21. See IEC 61280-2-2.

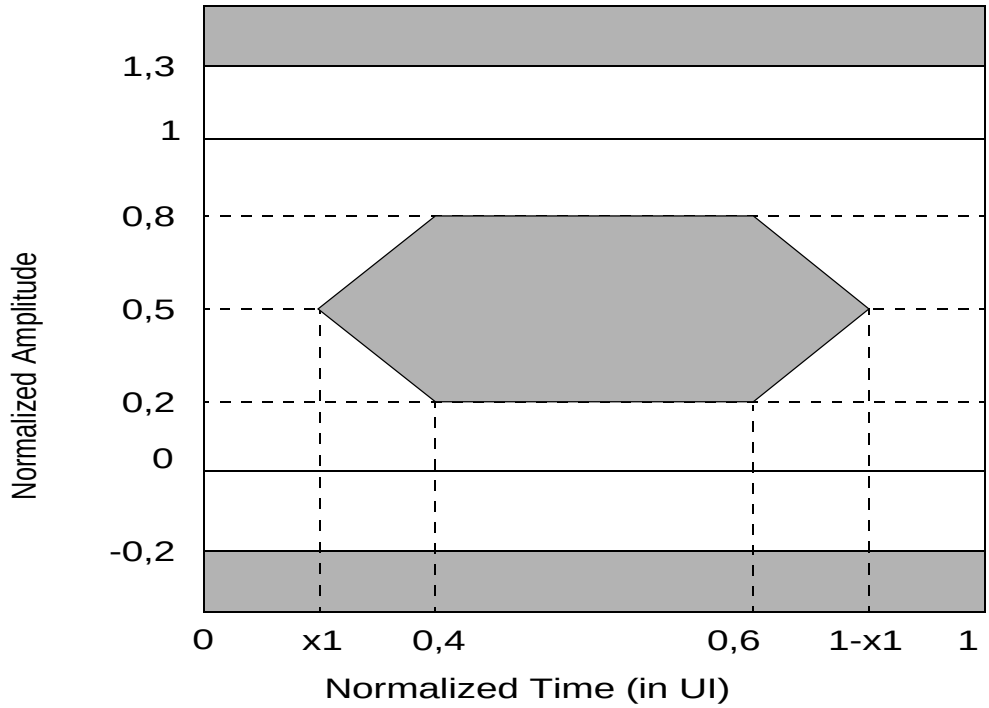

NOTE x1 shall be half the value given for total jitter at the γ T point given in table 13. The test or analysis shall include the effects of a single pole high-pass frequency-weighting function, which progressively attenuates jitter at 20 dB/decade below a frequency of bit rate/1 667. The value for x1 applies at a total jitter probability of 10^{-12}. At this level of probability direct visual comparison between the mask and actual signals is not a valid method for determining compliance with the jitter output requirements.

Figure 21 – MM transmitter eye diagram mask

Reflection effects on the transmitter are assumed to be small but need to be bounded. A specification of maximum Relative Intensity Noise (RIN) under worst case reflection conditions is included to ensure that reflections do not impact system performance.

Copyright International Organization for Standardization
Provided by IHS under license with ISO
No reproduction or networking permitted without license from IHS Not for Resale

If needed for conformance, the mask of the eye diagram for laser transmitters may be measured by the method of IEC 61280-2-2 using a reference receiver-oscilloscope combination having a fourth-order Bessel-Thomson transfer function given by:

$$H_P = \frac{105}{105 + 105y + 45y^2 + 10y^3 + y^4}$$

With

$$y = 2{,}114p \qquad p = \frac{j\omega}{\omega_r} \qquad \omega_r = 2\pi f_r \qquad f_r = 0{,}75 \ x \ \text{bit rate}$$

This filter is not intended to represent the noise filter used within an optical receiver but it is intended to provide a uniform measurement condition.

The nominal attenuation at the reference frequency, f_r, is 3 dB. The corresponding attenuation and group delay distortion at various frequencies are given in table 7 and table 8. The mask of the eye diagram is intended to define the limits of overshoot, undershoot and ringing of the transmitted optical signal. The eye mask diagram is not to be used for determining compliance with the specifications for rise/fall time and jitter.

Optical modulation amplitude is defined as the difference in optical power between a logic-1 and a logic-0. For more information on testing OMA see A.6.

Table 11 – Multimode 50 μm link classes

FC-0	**Unit**	**100-M5-SN-I**	**200-M5-SN-I**	**400-M5-SN-I**	**Note**
Subclause		6.4	6.4	6.4	
Data rate	MB/s	100	200	400	
Nominal signaling rate	MBaud	1 062,5	2 125	4 250	
Rate tolerance	ppm	±100	±100	±100	10
Operating distance	m	0,5 - 500	0,5 - 300	0,5 - 150	1
Fibre core diameter	μm	50	50	50	2
Transmitter (gamma-T)					
Type		Laser	Laser	Laser	
Spectral centre wavelength, min.	nm	770	830	830	
Spectral centre wavelength, max.	nm	860	860	860	
RMS spectral width, max.	nm	1,0	0,85	0,85	
Average launched power, max.	dBm				3
Average launched power, min.	dBm	-10	-10	-9	4
Optical modulation amplitude, min.	mW	0,156	0,196	0,247	5
Rise/Fall time (20% - 80%), max.	ps	300	150	90	6
RIN_{12} (OMA), max.	dB/Hz	-116	-117	-118	7

--`,,```,,,,````-`-`,,`,,`,`,,`---
Copyright International Organization for Standardization
Provided by IHS under license with ISO
No reproduction or networking permitted without license from IHS
Not for Resale

Table 11 – Multimode 50 μm link classes

Receiver (gamma-R)					
Average received power, max.	dBm	0	0	0	
Optical modulation amplitude, min.	mW	0,031	0,049	0,061	5
Return loss of receiver, min.	dB	12	12	12	
Stressed receiver sensitivity	mW	0,055	0,096	0,138	5,9
Stressed receiver vertical eye closure penalty	dB	0,96	1,26	1,67	9
Stressed receiver *DCD* component of *DJ* (at Tx), min.	ps	80	40	20	
Receiver electrical 3 dB upper cutoff frequency, max	GHz	1,5	2,5	5,0	8
Receiver electrical 10 dB upper cutoff frequency, max	GHz	3	6	12	8

NOTE 1 The operating ranges and loss budgets shown here are based on MM fibre bandwidth given in table 18. For link budget calculations and other MM fibre bandwidths see annex C.

NOTE 2 For details see clause 8.2 on page 59

NOTE 3 Lesser of class 1 laser safety limits (IEC 60825-1) or receiver power, max.

NOTE 4 The value for 100-M5-SN-I is calculated using a 9 dB extinction ratio, consistent with FC-PH2. The values for 200-M5-SN-I and 400-M5-SN-I are calculated using an infinite extinction ratio at the lowest allowed transmit OMA.

NOTE 5 Optical modulation amplitude values are peak-to-peak. See A.6

NOTE 6 Optical rise and fall time specifications are based on the unfiltered waveforms. For the purpose of standardizing the measurement method, measured waveforms shall conform to the mask as defined in FC-PI figure 16: Transmitter eye diagram mask. If a filter is needed to conform to the mask the filter response effect should be removed from the measured rise and fall times using the equation:

$T_{RISE/FALL} = [(T_{RISE/FALL_MEASURED})^2 - (T_{RISE/FALL_FILTER})^2]^{1/2}$

The optical signal may have different rise and fall times. Any filter should have an impulse response equivalent to a fourth order Bessel-Thomson Filter. See A.2.2.2

NOTE 7 See A.5.

NOTE 8 See A.8.

NOTE 9 See A.7.

NOTE 10 The data rate shall not exceed ± 0,01 % from the nominal data rate over all periods equal to 200 000 transmitted bits (~10 max length frames).

--`,,```,,,,````-`-`,,`,,`,`,,`---

Copyright International Organization for Standardization
Provided by IHS under license with ISO
No reproduction or networking permitted without license from IHS Not for Resale

Table 12 – Multimode 62,5 μm link classes

FC-0	Unit	100-M6-SN-I	200-M6-SN-I	400-M6-SN-I	Note
Subclause		6.4	6.4	6.4	
Data rate	MB/s	100	200	400	
Nominal signaling rate	MBd	1 062,5	2 125	4 250	
Rate tolerance	%	±0,01	±0,01	±0,01	10
Operating distance	m	0,5 to 300	0,5 to150	0,5 to 70	1
Fibre mode-field (core) diameter	μm	62,5	62,5	62,5	2
Transmitter (γ-T)					
Type		Laser	Laser	Laser	
Spectral centre wavelength, min.	nm	770	830	830	
Spectral centre wavelength, max.	nm	860	860	860	
RMS spectral width, max.	nm	1,0	0,85	0,85	
Average launched power, max.	dBm				3
Average launched power, min.	dBm	-10	-10	-9	4
Optical modulation amplitude, min.	mW	0,156	0,196	0,247	5
Rise/Fall time (20 % to 80 %), max.	ps	300	150	90	6
RIN_{12} (OMA), max.	dB/Hz	-116	-117	-118	7
Receiver (γ-R)					
Average received power, max.	dBm	0	0	0	
Optical modulation amplitude, min.	mW	0,031	0,049	0,061	5
Return loss of receiver, min.	dB	12	12	12	
Stressed receiver sensitivity	mW	0,067	0,109	0,148	5, 9
Stressed receiver vertical eye closure penalty	dB	2,18	2,03	2,14	9
Stressed receiver *DCD* component of *DJ* (at Tx), min.	ps	80	40	20	
Receiver electrical 3 dB upper cutoff frequency, max	GHz	1,5	2,5	5,0	8
Receiver electrical 10 dB upper cutoff frequency, max.	GHz	3	6	12	8

NOTE 1 The operating ranges and loss budgets shown here are based on MM fibre bandwidth given in table 18. For link budget calculations and other MM fibre bandwidths, see annex C.

NOTE 2 For details see 8.2

NOTE 3 Lesser of class 1 laser safety limits (IEC 60825-1) or receiver power, max.

NOTE 4 The value for 100-M6-SN-I is calculated using a 9 dB extinction ratio, consistent with FC-PH2. The values for 200-M6-SN-I and 400-M6-SN-I are calculated using an infinite extinction ratio at the lowest allowed transmit OMA.

NOTE 5 Optical modulation amplitude values are peak-to-peak. See A.6

NOTE 6 Optical rise and fall time specifications are based on the unfiltered waveforms. For the purpose of standardizing the measurement method, measured waveforms shall conform to the mask as defined in FC-PI figure 16: Transmitter eye diagram mask. If a filter is needed to conform to the mask the filter response effect should be removed from the measured rise and fall times using the equation:

$T_{RISE/FALL} = [(T_{RISE/FALL_MEASURED})^2 - (T_{RISE/FALL_FILTER})^2]^{1/2}$

The optical signal may have different rise and fall times. Any filter should have an impulse response equivalent to a fourth order Bessel-Thomson Filter. See A.2.2.2

NOTE 7 See A.5.

NOTE 8 See A.8.

NOTE 9 See A.7.

NOTE 10 The data rate shall not exceed ± 0,01 % from the nominal data rate over all periods equal to 200 000 transmitted bits (~10 max. length frames).

Copyright International Organization for Standardization
Provided by IHS under license with ISO
No reproduction or networking permitted without license from IHS Not for Resale

6.4.3 MM optical input interface

The receiver shall operate within a BER of 10^{-12} over the link's lifetime and temperature range when the input power falls within the range given in table 11 or table 12 and when driven through a cable plant with a data stream that fits the eye diagram mask specified in figure 21. See IEC 61280-2-2.

6.4.4 MM jitter budget

This clause defines, for every compliance point, the allowable jitter (see table 13) and the jitter which shall be tolerated (see table 14).

Receiver *TJ* and *DJ* shall comply to the listed values in table 13, over all allowable optical power input ranges and extinction ratios, as listed in table 11 or table 12. Receiver test conditions should not incur the penalties that are already built into the link power budget.

Table 13 – MM jitter output, peak to peak, max.

100-Mx-SN-I									
	Units	α_T	β_T	δ_T	γ_T	γ_R	δ_R	β_R	α_R
Deterministic (*DJ*) [c]	UI	note 1	0,11	0,12	0,21	0,24	0,36	0,37	note 1
Total (*TJ*) [a, b, c]	UI	note 1	0,23	0,25	0,43	0,47	0,61	0,63	note 1
200-Mx-SN-I									
		α_T		δ_T	γ_T	γ_R	δ_R		α_R
Deterministic (*DJ*) [c]	UI	note 1		0,14	0,26	0,29	0,39		note 1
Total (*TJ*) [a, b, c]	UI	note 1		0,26	0,44	0,48	0,64		note 1
400-Mx-SN-I									
		α_T		δ_T	γ_T	γ_R	δ_R		α_R
Deterministic (*DJ*) [c]	UI	note 1		note 2	0,26	0,29	note 2		note 1
Total (*TJ*) [a, b, c]	UI	note 1		note 2	0,44	0,48	note 2		note 1

[a] Total jitter is the sum of deterministic jitter and random jitter. If the actual deterministic jitter is less than the maximum specified, then the random jitter may increase as long as the total jitter does not exceed the specified maximum total jitter.

[b] Total jitter is specified at the 10^{-12} probability.

[c] The deterministic and total values in this table apply to jitter after application of a single pole high-pass frequency-weighting function, which progressively attenuates jitter at 20 dB/decade below a frequency of bit rate/1667.

NOTE 1 Values at the α points are determined by the application.

NOTE 2 At the 400 speed FC-PI does not define the copper specifications needed to provide values for the δ points.

Copyright International Organization for Standardization
Provided by IHS under license with ISO
No reproduction or networking permitted without license from IHS Not for Resale

Table 14 – MM jitter tolerance, peak to peak, min.

100-Mx-SN-I									
	Unit	α_T	β_T	δ_T	γ_T	γ_R	δ_R	β_R	α_R
Sinusoidal swept frequency (*SJ*) 637 kHz [c] to > 5 MHz	UI	NA	0,10	0,10	0,10	0,10	0,10	0,10	note 2
Deterministic (*DJ*) 637 kHz to 531 MHz[6]	UI	NA	0,11	0,12	0,21	0,24	0,36	0,37	note 2
Total (*TJ*) [a, b, d]	UI	NA	0,28	0,30	0,48	0,52	0,66	0,68	note 2
200-Mx-SN-I									
	Unit	α_T		δ_T	γ_T	γ_R	δ_R		α_R
Sinusoidal swept frequency (*SJ*) 1 275 kHz [c] to > 5 MHz	UI	NA		0,10	0,10	0,10	0,10		note 2
Deterministic (*DJ*) 1 275 kHz to 1 063 MHz[6]	UI	NA		0,14	0,26	0,29	0,39		note 2
Total (*TJ*) [a, b, d]	UI	NA		0,31	0,49	0,53	0,69		note 2
400-Mx-SN-I									
	Unit	α_T		δ_T	γ_T	γ_R	δ_R		α_R
Sinusoidal swept frequency (*SJ*) 2 549 kHz [c] to > 5 MHz	UI	NA		note 1	0,10	0,10	note 1		note 2
Deterministic (*DJ*) 2 549 kHz to 2 125 MHz [d]	UI	NA		note 1	0,26	0,29	note 1		note 2
Total (*TJ*) [a, b, d]	UI	NA		note 1	0,49	0,53	note 1		note 2

[a] The jitter values given are normative for a combination of *DJ*, *RJ* and *SJ* which receivers shall be able to tolerate without exceeding a BER of 10^{-12}.

[b] No value is given for random jitter (*RJ*). For compliance with this specification, the actual random jitter amplitude shall be the value that brings total jitter to the stated value at a probability of 10^{-12}.

[c] Receivers shall tolerate sinusoidal jitter of progressively greater amplitude at lower frequencies, according to the mask in figure 17, combined with the same *DJ* and *RJ* levels as were used in the high frequency sweep.

[d] The deterministic and total values in this table apply to jitter after application of a single pole high-pass frequency-weighting function, which progressively attenuates jitter at 20 dB/decade below a frequency of bit rate/1667.

NOTE 1 At the 400 speed FC-PI does not define the copper specifications needed to provide values for the δ points.

NOTE 2 Values at the α points are determined by the application.

--`,,```,,,,````-`-`,,`,,`,`,,`---

Copyright International Organization for Standardization
Provided by IHS under license with ISO
No reproduction or networking permitted without license from IHS Not for Resale

7 Optical interface receptacle specifications

7.1 Optical interface general information

The primary function of the optical interface connector is to align the optical transmission fibre mechanically to an optical port on a component such as a receiver or a transmitter. The fibre optical interfaces are shown here for reference only; the intermateability of each interface is specified in the International Standard stated below. The fibre optical interface at the telecommunications outlet, that is at the place where terminal equipment is connected to the permanent cabling of the premises, shall meet the reqirements of ISO/IEC 11801.

Dimensions specified in this clause may also be specified in the respective standards for optical connectors. The component standard takes precedence if a conflict exists.

7.2 SC optical interface

7.2.1 SC performance information

Mechanical, optical performance and intermateability of the SC connector system shall meet the requirements of IEC 61754-4.

Figure 22 shows the SC optical interface plug and receptacle.

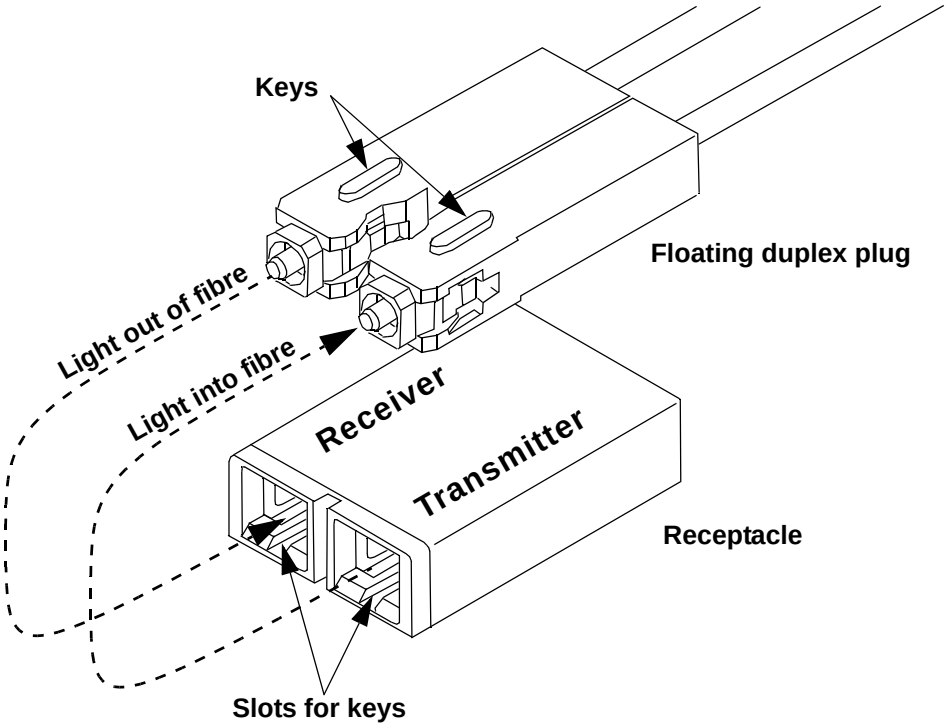

NOTE Connector keys are used for transmit/receive polarity only. The connector keys do not differentiate between single-mode and multimode connectors.

Figure 22 – Duplex SC optical interface

7.2.2 SC optical plug

Only the Floating Duplex style Connector Plug shall be used. Rigid SC Duplex connector shall not be used. Floating Duplex SC Connectors essentially take two simplex connectors and mechanically couple them together so each of the two SC Simplex Connectors are retained but free to 'float' within the constraints of the coupling assembly. Rigid Duplex SC connectors embody a single rigid housing to retain the simplex connectors and are not supported.

Copyright International Organization for Standardization
Provided by IHS under license with ISO
No reproduction or networking permitted without license from IHS Not for Resale

7.2.3 SC Duplex optical receptacle

The active SC Duplex Receptacle Interface shall conform to the requirements of IEC 61754-4-5 Duplex PC Interface with the following exception. The distance between the centre line of the active optical bores (ref DB) shall be increased from 12,65/12,75 mm to 12,60/12,80 mm. This is to facilitate the use of Floating Duplex SC Plug Connectors (example IEC 60874-19-1) and avoids the use of restrictive manufacturing tolerances associated with the transceiver. Increasing this tolerance precludes the use of Rigid Duplex SC connectors.

7.3 SG optical interface

Mechanical, optical performance and intermateability of the SC connector system shall meet IEC 61754-19.

Figure 23 outlines the SG interface.

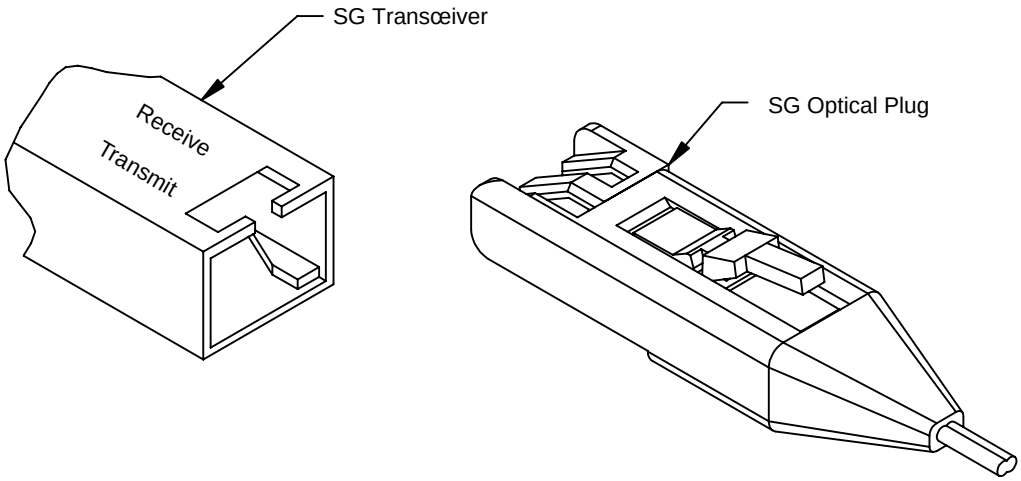

Figure 23 – SG interface

Copyright International Organization for Standardization
Provided by IHS under license with ISO
No reproduction or networking permitted without license from IHS
Not for Resale

7.4 LC optical interface

Mechanical, optical performance and intermateability for the LC connector system shall meet IEC 61754-20. The acronym "LC"when used with the "LC"connector and when used to describe the "LC" optical transmission variant are not related.

Figure 24 outlines the LC interface.

.

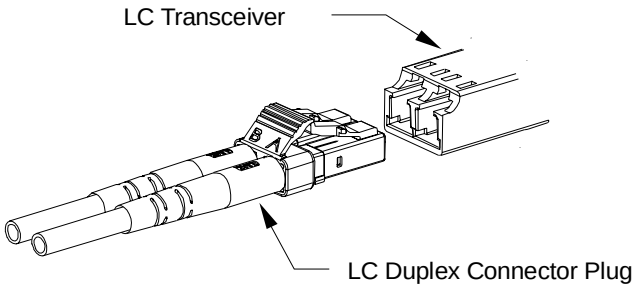

Figure 24 – Duplex LC interface

Copyright International Organization for Standardization
Provided by IHS under license with ISO
No reproduction or networking permitted without license from IHS
Not for Resale

7.5 MT-RJ optical interface

Mechanical, optical performance and intermateability for the MT-RJ connector system shall meet IEC 61754-18.

Figure 25 outlines the MT-RJ interface.

.

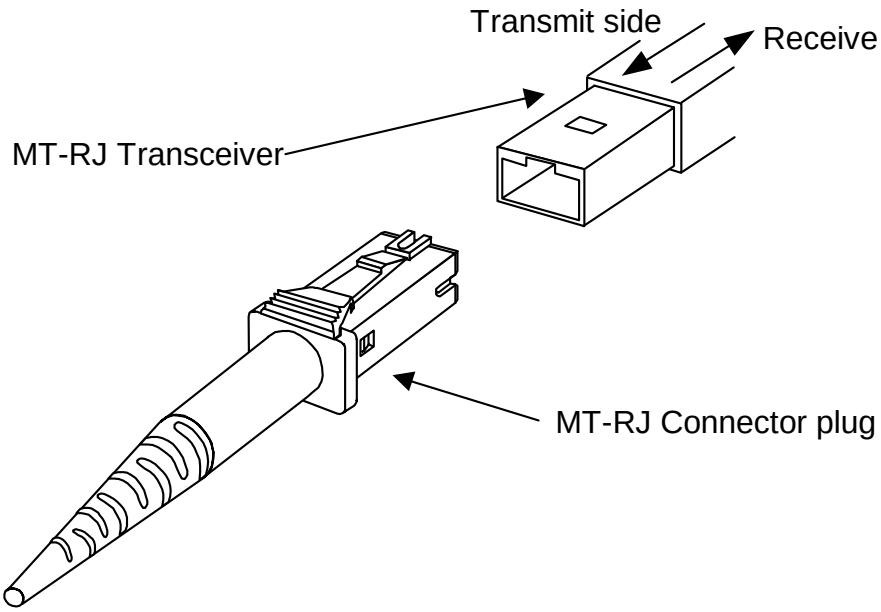

Figure 25 – MT-RJ connector and receptacle

7.6 MU connector

Mechanical, optical performance and intermateability for the MU connector system are specified in IEC 61754-6.

Figure 26 outlines the MU interface.

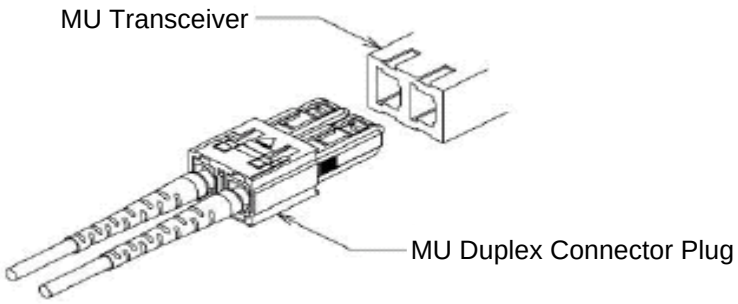

Figure 26 – MU connector plug envelope dimensions

Copyright International Organization for Standardization
Provided by IHS under license with ISO
No reproduction or networking permitted without license from IHS
Not for Resale

8 Optical fibre cable plant specification

8.1 SM cable plant specification

This subclause specifies a single-mode cable plant for the Fibre Channel signaling rates of 1,06 GBd, 2,12 GBd and 4,25 GBd at their rated distance of 10 km.

The cable plant is generally insensitive to signaling rate and therefore any installed portions of the cable plant may be used at any signaling rate (see table 15).

The insertion loss is specified for a connection, which consists of a mated pair of optical connectors.

The maximum link distances for single-mode fibre are calculated based on an allocation of 2,0 dB total connection and splice loss. For example, this allocation supports four connections with typical insertion loss equal to 0,5 dB (or less) per connection. Different loss characteristics may be used provided the loss budget requirements of table 16 are met.

Table 15 – Single-mode cable plant

FC-0		**400-SM-LC-L**	**200-SM-LC-L**	**100-SM-LC-L**
Subclause		6.3	6.3	6.3
Operating Range	m	2 to 10 000	2 to 10 000	2 to 10 000
Loss Budget	dB	7,8	7,8	7,8

8.1.1 SM optical fibre type

The optical fibre shall conform to IEC 60793-2, Type B1.1 fibres.

8.1.2 SM cable plant loss budget

The loss budget for single-mode fibre shall be no greater than specified in table 15. These limits were arrived at by taking the difference between the minimum transmitter output power and the receiver sensitivity and subtracting link penalties.

8.1.3 SM optical return loss

The cable plant optical return loss, with the receiver connected, shall be greater than or equal to 12 dB. This is required to keep the reflection penalty under control. The receiver shall have a return loss greater than or equal to one glass air interface.

Connectors and splices shall each have a return loss greater than 26 dB as measured by the methods of IEC 61300-2-5.

8.2 MM cable plant specification

8.2.1 General

The most commonly used multimode (MM) cable plant is the 62,5 µm cable plant. For short wavelength lasers a 50 µm cable plant will have better performance than a 62,5 µm cable plant because of its fibre properties.

The insertion loss is specified for a connection, which consists of a mated pair of optical connectors.

The maximum link distances for multimode fibre are calculated based on an allocation of 1,5 dB total connection and splice loss. For example, this allocation supports three connections with typical insertion loss equal to 0,5 dB (or less) per connection or two connections with insertion loss of 0,75 dB. Different loss characteristics may be used provided the loss budget requirements of table 16 are met.

Copyright International Organization for Standardization
Provided by IHS under license with ISO
No reproduction or networking permitted without license from IHS Not for Resale

Table 16 – Multimode cable plant

FC-0	400-M6-SN-I	200-M6-SN-I	100-M6-SN-I	400-M5-SN-I	200-M5-SN-I	100-M5-SN-I
Subclause	6.4	6.4	6.4	6.4	6.4	6.4
Date rate (MB/s)	400	200	100	400	200	100
Operating range (m)	0,5 to 70	0,5 to 150	0,5 to 300	0,5 to 150	0,5 to 300	0,5 to 500
Loss Budget (dB)	1,78	2,10	3,00	2,06	2,62	3,85
NOTE The operating ranges shown here are based on MM fibre bandwidth given in table 18. For link budget calculations and other MM fibre bandwidths, see annex C.						

8.2.2 MM optical fibre types

The optical fibre shall conform to IEC 60793-2 Type A1a and Type A1b fibres.

Table 17 – Multimode fibre types

Nominal core diameter	Cladding diameter	Nominal numerical aperture	IEC 60793-1-20
62,5 µm	125 µm	0,275	Type A1a
50 µm	125 µm	0,20	Type A1b

8.2.3 MM modal bandwidth

The following normalized bandwidth values are based on a nominal source wavelength of 850 nm and 1 300 nm, as described in table 18.

Table 18 – Multimode OFL bandwidth

Fibre	Wavelength	Modal bandwidth, -3dB, min.	Test per
62,5 µm	850 nm	200 MHz•km [a]	IEC 60793-1-41
	1 300 nm[(b]	500 MHz•km [a]	IEC 60793-1-41
50 µm	850 nm	500 MHz•km [a]	IEC 60793-1-41
	1 300 nm[(b]	500 MHz•km [a]	IEC 60793-1-41

[a] Some users may install higher modal bandwidth fibre to facilitate future use of the cable plant for higher bandwidth applications. For shorter distances (see table 16), a lower bandwidth fibre may be substituted provided the performance requirements are met. See annex C.

[b] 1 300 nm MM operation is not part of this standard.

8.2.4 MM cable plant loss budget

The loss budget for the multimode fibre cable plant shall be no greater than specified in table 16. These limits were arrived at by taking the difference between the minimum transmitter optical modulation amplitude and the receiver optical modulation minimum and subtracting the link power penalties. The limits include the losses of the fibre and other components in the link such as splices and connectors. The connectors at the ends of the links are included in the transmitter and receiver specifications and not in the cable plant limit. The link power penalties were calculated using the methodologies in IEC 61282-2 and IEC 60793-2-50.

In some cases the modal dispersion limit may be reached in an installation before the installation loss limit of table 16.

Conformance to the loss budget requirements shall be verified by means of IEC 61280-4-1.

Copyright International Organization for Standardization
Provided by IHS under license with ISO
No reproduction or networking permitted without license from IHS Not for Resale

8.2.5 MM optical return loss

The cable plant optical return loss, with the receiver connected, shall be greater than or equal to 12 dB. This is required to keep the reflection penalty under control. The receiver shall have a return loss greater than or equal to one glass-air interface.

Connectors and splices shall each have a return loss greater than 20 dB.

8.3 Connectors and splices

Connectors and splices of any nature are allowed inside the cable plant as long as the resulting loss conforms to the optical budget of this standard. The number and quality of connections represent a design trade-off outside the scope of this document.

Copyright International Organization for Standardization
Provided by IHS under license with ISO
No reproduction or networking permitted without license from IHS Not for Resale

9 Electrical cable interface specification

9.1 General

This clause defines the interfaces of the serial electrical signal at the reference points α and at the inter-operability points β, δ and γ in a TxRx Connection. The existence of a β, δ or γ point is determined by the existence of a connector at that point in a TxRx Connection.

Each conforming electrical FC device shall be compatible with this serial electrical interface to allow interoperability within an FC environment. All Fibre Channel TxRx Connections described in this clause shall operate within the BER objective (10^{-12}). The parameters specified in this clause support meeting that requirement under all conditions including the minimum input and output amplitude levels. The corresponding cable plant specifications are described in clause 9.

These specifications are based on ensuring interoperability across multiple vendors supplying the technologies (both transceivers and cable plants) under the tolerance limits specified in the document. TxRx Connections operating at these maximum distances may require some form of equalization to enable the signal requirements to be met. Greater distances may be obtained by specifically engineering a TxRx Connection based on knowledge of the technology characteristics and the conditions under which the TxRx Connection is installed and operated. However, such distance extensions are outside the scope of this standard.

Table 19 – General electrical characteristics

	Units	100-SE-EL-S	100-DF-EL-S [a, c]	200-SE-EL-S	200-DF-EL-S [a]
Data Rate	MB/s	100	100	200	200
Nominal Bit Rate	Mbit/s	1 062,5	1 062,5	2 125	2 125
Tolerance [b]	%	±0,01	±0,01	±0,01	±0,01
Media Impedance	Ω (nom)	75	100 and 150 respectively	75	150

[a] The media impedances shown for 100-EL-DF-S and 200-EL-DF-S are the differential or odd mode, impedances.

[b] The data rate may be verified by determining the time to transmit at least 200 000 bits (10 max. length FC frames).

[c] For 100-DF-EL-S over balanced channels class F, see ISO/IEC 14165-114.

9.2 Transmitted signal characteristics.

This clause defines the interoperability requirements of the transmitted signal at the driver end of a TxRx Connection as measured using a test load as specified in figure 36.

Copyright International Organization for Standardization
Provided by IHS under license with ISO
No reproduction or networking permitted without license from IHS Not for Resale

Table 20 – Transmitted signal characteristics at β_T, δ_T and γ_T

		Units	100-SE-EL-S	100-DF-EL-S [g, h]	200-SE-EL-S	200-DF-EL-S [g]
β T point						
Jitter output		UI Max	See table 22	See table 22	See table 22	See table 22
Eye mask figure 27 [a]	B [b]	mV	1 000	1 000	1 000	1 000
	A [c]	mV	300	300	300	300
	X1	UI	See Note 1	See Note 1	See Note 1	See Note 1
	X2	UI	X1+0,19	X1+0,19	X1+0,19	X1+0,19
Skew, max. [f]		ps	NA	25	NA	15
δ T Point						
Jitter output		UI Max.	See table 22	See table 22	See table 22	See table 22
Eye mask figure 27 [a]	B [b]	mV	1 000	1 000	1 000	1 000
	A [c]	mV	325	325	325	325
	X1	UI	See Note 1	See Note 1	See Note 1	See Note 1
	X2	UI	X1+0,19	X1+0,19	X1+0,19	X1+0,19
Skew, max. [f]		ps	NA	20	NA	20
γ T Point						
Jitter output		UI Max.	See table 22	See table 22	See table 22	See table 22
Eye mask figure 27 [a]	B [b]	mV	1 000	1 000	1 000	1 000
	A [c]	mV	550	550	550	550
	X1	UI	See Note 1	See Note 1	See Note 1	See Note 1
	X2	UI	X1+0,19	X1+0,19	X1+0,19	X1+0,19
Skew, max. [f]		ps	NA	25	NA	15
Max. transmitter off voltage (Tx off) [d]		mV peak to peak	70	70	70	70
Eye mask normalized amplitudes, at all points [a]						
Y1		none	0,2	0,2	0,2	0,2
Y2		none	0,1	0,1	0,1	0,1
Rise/Fall Time 20 % to 80 %, at all points for 100-XX and β and γ points only for 200-XX) [e]						
Max.		ps	385	385	192	192
Min.		ps	100	100	75	75

[a] Drivers shall meet both the absolute and normalized amplitude requirements.

[b] The B amplitude specification identifies the maximum signal peak (including overshoots) that can be delivered into a resistive load matching those shown in figure 36.

[c] The minimum allowed peak to peak eye amplitude opening that shall be delivered into a resistive load matching those shown in figure 36 is twice the 'A' amplitude shown above.

[d] The 'transmitter off voltage' is the maximum voltage measured at point γ_T (across a resistive load matching those shown in figure 36) when the transmitter is logically turned off or is un-powered. Measurement conditions are specified in D.6.

[e] Rise/fall time measurements to be made using an oscilloscope with a bandwidth including probes of at least 1,8 times the baud rate. See A.2.2.2

[f] Skew measurements are to be made using an oscilloscope with a bandwidth including probes of at least 1,8 times the baud rate. See A.2.4.

[g] All specifications for 100-EL-DF-S and 200-EL-DF-S are based on differential measurements unless specifically listed otherwise.

[h] For 100-DF-EL-S over balanced channels class F, see ISO/IEC 14165-114.

NOTE 1 The value of X1 shall be half the value for total jitter given table 22. The test or analysis shall include for the effects of a single pole high-pass frequency-weighting function, which progressively attenuates jitter at 20 dB/decade below a frequency of bit rate/1 667. The value for X1 applies at a total jitter probability of 10^{-12}. At this level of probability direct visual comparison between the mask and actual signals is not a valid method for determining compliance with the jitter output requirements, see 9.5.

Copyright International Organization for Standardization
Provided by IHS under license with ISO
No reproduction or networking permitted without license from IHS Not for Resale

9.3 Received signal characteristics

This clause defines the interoperability requirements of the delivered signal at the receiver end of a TxRx Connection using a test load, as specified in figure 36.

Table 21 – Delivered signal characteristics to β_R, δ_R and γ_R

	Units	100-SE-EL-S	100-DF-EL-S [c, d5]	200-SE-EL-S	200-DF-EL-S [c]
γ R point					
Jitter Output	UI - Max.	See table 22	See table 22	See table 22	See table 22
Eye mask [a] figure 28: Y1	mV	200	200	200	200
Y2	mV	1 000	1 000	1 000	1 000
X1	UI	See note 1	See note 1	See note 1	See note 1
X2	UI	0,5	0,5	0,5	0,5
Skew [b]	ps max.	NA	200	NA	100
δ R point					
Jitter Output	UI - Max.	See table 22	See table 22	See table 22	See table 22
Eye mask [a] figure 28: Y1	mV	185	185	185	185
Y2	mV	1 000	1 000	1 000	1 000
X1	UI	See note 1	See note 1	See note 1	See note 1
X2	UI	0,5	0,5	0,5	0,5
Skew [b]	ps max.	NA	205	NA	105
β R point					
Jitter Output	UI - Max.	See table 22	See table 22	See table 22	See table 22
Eye mask [a] figure 28: Y1	mV	200	200	200	200
Y2	mV	1 000	1 000	1 000	1 000
X1	UI	See note 1	See note 1	See note 1	See note 1
X2	UI	0,5	0,5	0,5	0,5
Skew [b]	ps max.	NA	200	NA	100

[a] The value for X1 applies at a total jitter probability of 10^{-12}. At this level of probability direct visual comparison between the mask and actual signals is not a valid method for determining compliance with the jitter output requirements, see 9.5.

[b] Skew measurements are to be made using an oscilloscope with a bandwidth including probes of at least 1,8 times the baud rate. The figure given assumes a combined maximum transmitter and maximum interconnect skew. See A.2.4.

[c] All specifications for 100-EL-DF-S and 200-EL-DF-S are based on differential measurements, see A.2.4, unless specifically listed otherwise.

[d] For 100-DF-EL-S over balanced channels class F, see ISO/IEC 14165-114.

NOTE 1 The value for X1 shall be half the value given for total jitter in table 22. The test or analysis shall include the effects of a single pole high-pass frequency-weighting function, which progressively attenuates jitter at 20 dB/decade below a frequency of bit rate/1 667.

--`,,```,,,,````-`-`,,`,,`,`,,`---
Copyright International Organization for Standardization
Provided by IHS under license with ISO
No reproduction or networking permitted without license from IHS
Not for Resale

9.4 Jitter characteristics

This clause defines, at every compliance point, the allowable output jitter (see table 22) and the jitter that shall be tolerated (See table 23). Both tables contain entries for inter-enclosure TxRx Connections and for intra-enclosure TxRx Connections.

Unless identified to the contrary, equipment for use inside enclosures can be expected to comply with the intra-enclosure β point specification. Similarly, enclosures can be expected to comply with the inter-enclosure γ point specification.

The values for jitter in this clause are measured at the average amplitude point.

Table 22 – Jitter output

100-SE-EL-S and 100-DF-EL-S Inter-enclosure, max. [a]								
Units: UI peak to peak	α_T	β_T	δ_T [c]	γ_T	γ_R	δ_R	β_R	α_R
Deterministic (UI peak to peak)	note 2	0,11	0,12	0,13	0,35	0,36	0,37	note 2
Total (UI peak to peak) [b]	note 2	0,23	0,25	0,27	0,54	0,56	0,58	note 2
100-SE-EL-S and 100-DF-EL-S Intra-enclosure, max. [a]								
Units: UI peak to peak	α_T	β_T					β_R	α_R
Deterministic (UI peak to peak)	note 2	0,11					0,37	note 2
Total (UI peak to peak) [b]	note 2	0,23					0,58	note 2
200-SE-EL-S and 200-DF-EL-S Inter-enclosure, max. [a]								
Units: UI peak to peak	α_T		δ_T [c]	γ_T	γ_R	δ_R		α_R
Deterministic (UI peak to peak)	note 2		0,14	0,16	0,37	0,39		note 2
Total (UI peak to peak) [b]	note 2		0,26	0,30	0,57	0,59		note 2
Intra-enclosure, max. [a]								
Units: UI peak to peak	α_T	β_T					β_R	α_R
Deterministic (UI peak to peak)	note 2	0,20					0,33	note 2
Total (UI peak to peak) [b]	note 2	0,33					0,52	note 2

[a] Total jitter is the sum of deterministic jitter and random jitter. If the actual deterministic jitter is less than the maximum specified, then the random jitter may increase as long as the total jitter does not exceed the specified maximum total jitter.

[b] Total jitter is specified at a probability of 10^{-12}.

[c] If total jitter delivered at δ_T is less than the maximum allowed, then the jitter distribution of the signals is allowed to be asymmetric. The total jitter, plus the magnitude of the asymmetry, shall not exceed the allowed maximum total jitter. (The numerical difference between the average of the peaks (at 10**-12) and the average of the individual events is the measure of the asymmetry.)

[d] Jitter peak to peak measured < *TJ* max. - |Asymmetry|

NOTE 1 The deterministic and total values in this table apply to jitter after application of a single pole high-pass frequency-weighting function, which progressively attenuates jitter at 20 dB/decade below a frequency of bit rate/1 667.

NOTE 2 Values at the α points are determined by the application.

Copyright International Organization for Standardization
Provided by IHS under license with ISO
No reproduction or networking permitted without license from IHS Not for Resale

Table 23 – Jitter tolerance

100-SE-EL-S and 100-DF-EL-S [a] Inter-enclosure, min.								
Units: UI peak to peak	α_T	β_T	δ_T	γ_T	γ_R	δ_R	β_R	α_R
Sinusoidal swept frequency (*SJ*) 637 kHz [d] to >5 MHz	NA	0,10	0,10	0,10	0,10	0,10	0,10	note 1
Deterministic (*DJ*) 637 kHz to 531 MHz [e]	NA	0,11	0,12	0,13	0,35	0,36	0,37	note 1
Total [b, c, e]	NA	0,33	0,35	0,37	0,64	0,66	0,68	note 1
100-SE-EL-S and 100-DF-EL-S [a] Intra-enclosure, min.								
Units: UI peak to peak	α_T	β_T					β_R	α_R
Sinusoidal swept frequency (*SJ*) 637 kHz [d] to >5 MHz	NA	0,10					0,10	note 1
Deterministic (*DJ*) 637 kHz to 531 MHz [e]	NA	0,11					0,37	note 1
Total [b, c, e]	NA	0,33					0,68	note 1
200-SE-EL-S and 200-DF-EL-S [a] Inter-enclosure, min.								
Units: UI peak to peak	α_T		δ_T	γ_T	γ_R	δ_R		α_R
Sinusoidal swept frequency (*SJ*) 1 274 kHz [d] to > 5 MHz	NA		0,10	0,10	0,10	0,10		note 1
Deterministic (*DJ*) 1 274 kHz to 1 062 MHz [e]	NA		0,14	0,16	0,37	0,39		note 1
Total [b, c, e]	NA		0,36	0,40	0,67	0,69		note 1
200-SE-EL-S and 200-DF-EL-S [a] Intra-enclosure, min.								
Units: UI peak to peak	α_T	β_T					β_R	α_R
Sinusoidal swept frequency (*SJ*) 1 274 kHz [d] to >5 MHz	NA	0,10					0,10	note 1
Deterministic (*DJ*) 1 274 kHz to 1 062 MHz [e]	NA	0,20					0,33	note 1
Total [b, c, e]	NA	0,43					0,62	note 1

[a] The jitter values given are normative for a combination of *DJ*, *RJ* and *SJ* which receivers shall be able to tolerate without exceeding a BER of 10^{-12}.

[b] No value is given for random jitter (*RJ*). For compliance with this specification, the actual random jitter amplitude shall be the value that brings total jitter to the stated value at a probability of 10^{-12}.

[c] Receivers shall tolerate sinusoidal jitter of progressively greater amplitude at lower frequencies, according to the mask in figure 31, combined with the same *DJ* and *RJ* levels as were used in the high frequency sweep.

[d] The additional 0,1 UI of sinusoidal jitter is added to ensure the receiver has sufficient operating margin in the presence of external interference.

[e] The deterministic and total values in this table apply to jitter after application of a single pole high-pass frequency-weighting function, which progressively attenuates jitter at 20 dB/decade below a frequency of bit rate/1 667.

NOTE 1 Values at the α points are determined by the application.

Copyright International Organization for Standardization
Provided by IHS under license with ISO
No reproduction or networking permitted without license from IHS Not for Resale

9.5 Eye masks

9.5.1 General

The eye masks shown in this clause shall be interpreted as graphical representations of the voltage and time limits. The time values between X1 and 1-X1 cover all but 10^{-12} of the jitter population. The random content of the total jitter population has a range of ± 7 sigma. Current oscilloscope technology only supports approximately ± 3 sigma, therefore the traditional method of using an oscilloscope to compare the signals against these masks to ascertain jitter compliance is invalid. The oscilloscope remains valid for determining rise/fall times, amplitude and under and overshoots.

9.5.2 Transmitted eye mask at β_T, δ_T and γ_T.

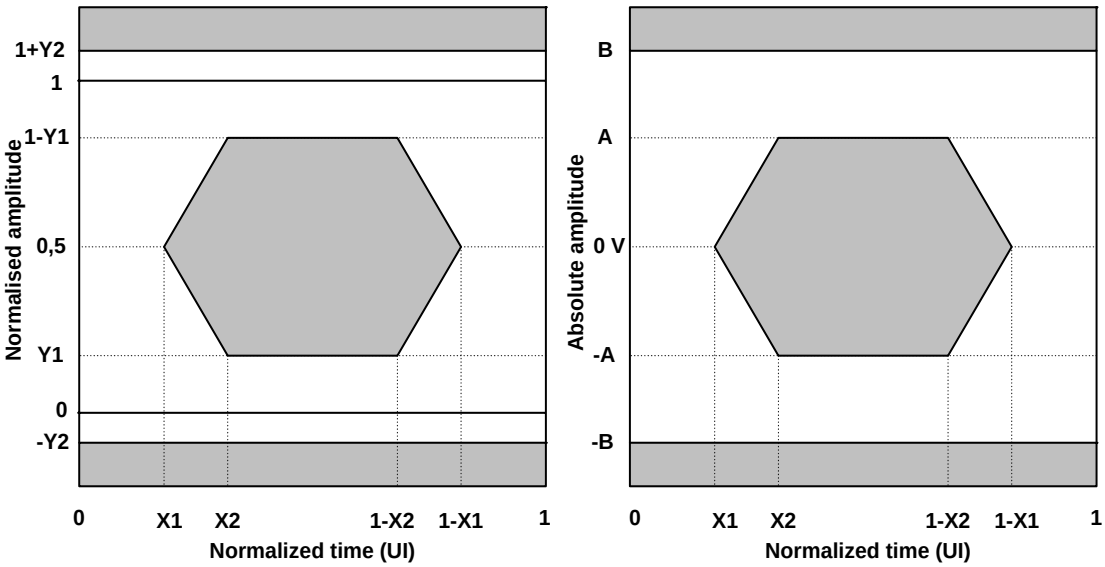

Figure 27 – Normalized (left) and absolute (right) eye diagram masks at β_T, δ_T and γ_T.

For unbalanced drivers the absolute amplitude values assume a.c. coupling between the test load and the driver. Drivers shall meet the normalized and the absolute amplitude requirements. The Y1 and Y2 amplitudes allow signal overshoot of 10 % and undershoot of 20 %, relative to the amplitudes determined to be 1 and 0.

To accurately determine the 1 and 0 amplitudes for use with the normalized mask use an oscilloscope having an internal histogram capability. Use the voltage histogram capability and set the time limits of the histogram to extend from 0,4 UI to 0,6 UI. Set the voltage limits of the histogram to include only the data associated with the 1 level. The 1 level to be used with the normalized mask shall be the mean of the histogram. Repeat this procedure for the 0 level.

The eye diagram mask applies to jitter after application of a single pole high-pass frequency-weighting function which progressively attenuates jitter at 20 dB/decade below a frequency of bit rate/1 667.

--`,,```,,,,````-`-`,,`,,`,`,,`---

Copyright International Organization for Standardization
Provided by IHS under license with ISO
No reproduction or networking permitted without license from IHS Not for Resale

9.5.3 Received eye mask at β_R, δ_R and γ_R.

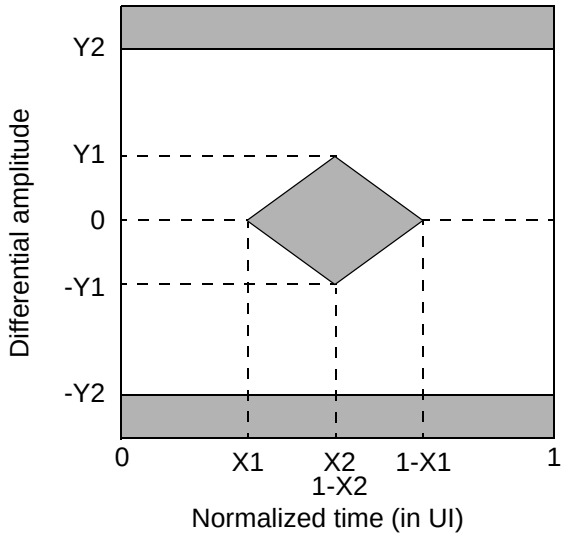

Figure 28 – Eye diagram mask at β_R, δ_R and γ_R

The received eye diagram mask applies to jitter after application of a single pole high-pass frequency-weighting function, which progressively attenuates jitter at 20 dB/decade below a frequency of bit rate/1 667.

Verifying compliance with the limits represented by the received eye mask should be done with reverse channel traffic present in order that the effects of cross-talk are taken into account.

9.5.4 Jitter tolerance masks

Tolerance eye masks at β_T, δ_T and γ_T shall be based on figure 27 and shall be constructed using the X2, Y1 and Y2 values given in table 20. X1 values shall be half the value for total jitter given in table 23 for jitter value frequencies above bit rate/1 667.

Note that the x_T tolerance masks are identical to the output masks (per table 20) except that X1 and X2 values are each increased by half the amount of the sinusoidal jitter values given in table 23.

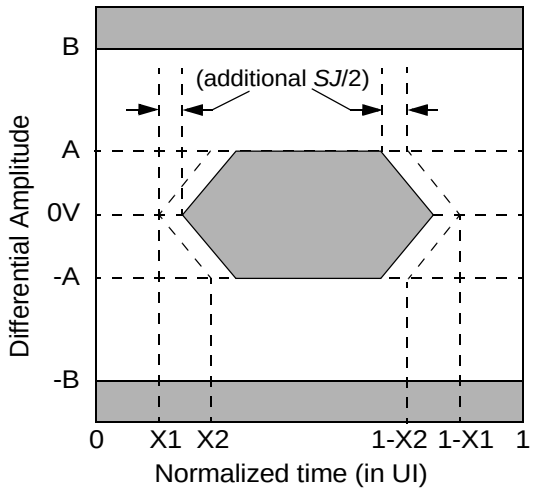

Figure 29 – Deriving the tolerance mask at the interoperability T points

Tolerance eye masks at β_R, δ_R and γ_R shall be based on figure 28 and shall be constructed using the X2 and Y2 values given in table 21. X1 shall be half the value for total jitter given in table 23 for jitter

Copyright International Organization for Standardization
Provided by IHS under license with ISO
No reproduction or networking permitted without license from IHS
Not for Resale

frequencies above bit rate/1 667. However, the leading and trailing edge slopes of figure 28 (with ALL values from table 20) shall be preserved. As a result the amplitude value of Y1 will be less than the one given in table 21 and shall therefore be calculated from those slopes as follows:

$Y1_{Tol} = Y1_{OP}(X2_{OP} - 0{,}5(\text{additional SJ UI}) - X1_{OP})/(X2_{OP} - X1_{OP})$

$Y1_{Tol}$ = value for Y1 to be used for the tolerance masks

$Y1_{OP}$, $X1_{OP}$ and $X2_{OP}$ are the values in table 21 for Y1, X1 and X2

Note that the X1 points in the x_R tolerance masks are greater than the X1 points in the output masks (as satated in table 20), again due to the addition of sinusoidal jitter.

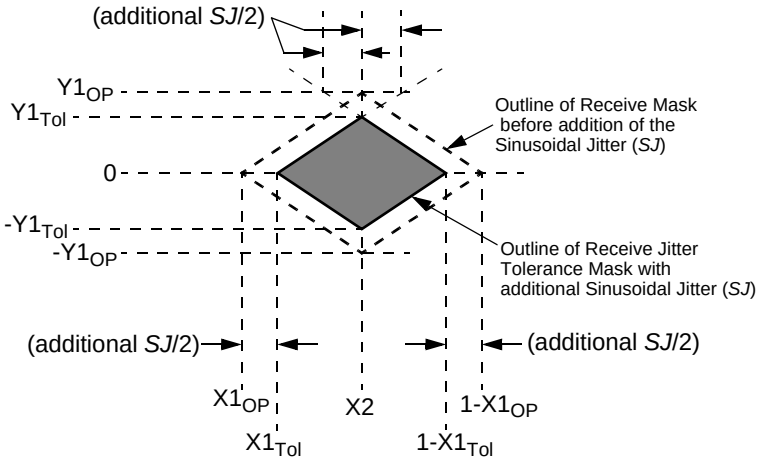

Figure 30 – Deriving the tolerance masks at the interoperability R points

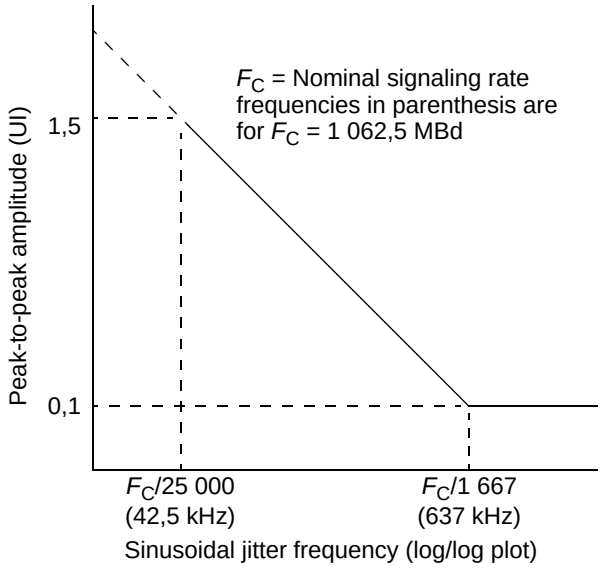

Figure 31 – Sinusoidal jitter mask

Copyright International Organization for Standardization
Provided by IHS under license with ISO
No reproduction or networking permitted without license from IHS
Not for Resale

9.6 Impedance specifications

Table 24 – FC-PI measured impedance

	Units	100-SE-EL-S	100-DF-EL-S [j]	200-SE-EL-S	200-DF-EL-S
TDR risetime [a, b]	ps	100	100	75	75
Media (cable) [b, c, d]	Ω	75 ± 5	150 ± 10	75 ± 5	150 ± 10
Media (PCB) [b, c, d]	Ω	75 ± 7,5	150 ± 15	75 ± 7,5	150 ± 15
Through connection [b, e]	Ω	75 ± 15	150 ± 30	75 ±15	150 ± 30
Exception window (max.) [b, e, f]	ps	800	800	NA	NA
Exception window [b, e, f]	Ω	75 ± 25	150 ± 50	NA	NA
Transmission line terminator [b]	Ω	75 ± 5	150 ± 10	75 ± 5	150 ± 10
Receiver termination impedance [b, g, h, i]	Ω	75 ± 15	150 ± 30	75 ± 15	150 ± 30
Return Loss (min.) [b, i]	dB	15	15	15	15

[a] All times indicated for TDR measurements are recorded times. Recorded times are twice the transit time of the TDR signal.

[b] All measurements are made through mated connector pairs.

[c] The media impedance measurement identifies the impedance mismatches present in the media when terminated in its characteristic impedance. This measurement includes mated connectors at both ends of the media, where they exist and any intermediate connectors or splices.

[d] Where the media has an electrical length of > 4 ns the procedure detailed in SFF-8410 or an equivalent procedure, shall be used to determine the impedance.

[e] The through connection tolerance and the exception window may be applied only at the interoperability points and shall be wholly contained within 2 ns of that point.

[f] The Exception Window begins at the point where the measured impedance first falls below the impedance tolerance limit for Through Connection. It ends at the point where the measured impedance subsequently remains within the limits for Through Connection impedance.

[g] The receiver termination impedance specification applies to each and every receiver in a TxRx Connection and covers all time points between the connector nearest the receiver, the receiver and the transmission line terminator. This measurement shall be made from that connector.

[h] At the time point corresponding to the connection of the receiver to the transmission line the input capacitance of the receiver and its connection to the transmission line, may cause the measured impedance to fall below the minimum impedances specified in this table. The area of the dip caused by this capacitance is directly proportional to the capacitance. An approximate value for the area is given by the product of the amplitude of the dip (in units of ρ) and its width (in ps) measured at the half amplitude point. The product calculated by this method shall not be greater than 150 ps. The amplitude is defined as being the difference in ρ between the ρ at the nominal impedance and the ρ at the minimum impedance point.

[i] All impedance measurements shall be TDR measurements except where the receiver termination being tested includes inductive components such as transformers. When inductive components exist in the receiver termination a swept frequency Return Loss or VSWR measurement may be more appropriate. The frequency sweep shall cover the range Bit rate/10 to Bit rate/2.

[j] For 100-DF-EL-S over balanced channels class F, see ISO/IEC 14165-114.

NOTE 1 During the Exception Window, no single excursion shall exceed the Through Connection impedance tolerance for a period greater than twice the TDR risetime specified for the measurement.

Copyright International Organization for Standardization
Provided by IHS under license with ISO
No reproduction or networking permitted without license from IHS Not for Resale

9.7 Electrical TxRx Connections

TxRx Connections may be divided into TxRx Connection Segments. (See figure 9.) In a single TxRx Connection individual TxRx Connection Segments may be formed from differing media and materials, including traces on printed wiring boards and optical fibres. This subclause applies only to TxRx Connection Segments that are formed from an electrically conductive media.

Each electrical TxRx Connection Segment shall comply with the impedance requirements of table 24 for the media from which they are formed. An optional equalizer network, when present in a TxRx Connection, shall exist and operate as part of the cable plant.

TxRx Connections that are composed entirely of electrically conducting media shall be applied only to homogenous ground applications such as between devices within an enclosure or rack or between enclosures interconnected by a common ground return or ground plane. This restriction minimizes safety and interference concerns caused by any voltage differences that could otherwise exist between equipment grounds.

9.8 Compliance points

For the purposes of this subclause, compliance points are defined as those interoperability points at which the interoperability specifications are met. The default inter-enclosure transmitter compliance points are shown in figure 32 and in figure 33. The default intra-enclosure transmitter compliance points are shown in figure 34 and in figure 35.

Unless identified to the contrary, equipment intended to provide the γ points of an inter-cabinet TxRx Connection shall meet interoperability specifications at points γ_R and γ_T, (i.e. where the enclosure Faraday shield transitions between the enclosure and the cable shield, as shown in figure 9.) If sections of transmission line exist within the Faraday shield, they can be considered part of the associated FC device or transmit/receive network and not part of the cable plant.

Unless identified to the contrary, equipment intended to provide the δ points of an inter-cabinet TxRx Connection shall meet interoperability specifications at points δ_R and δ_T.

Unless identified to the contrary, equipment or devices intended to provide the β points of an intra cabinet TxRx Connection shall meet the interoperability specifications at the FC device connector points, β_R and β_T, as shown in figure 9. In the embedded environment of an intra-cabinet TxRx Connection, the presence of a signal ground is only required for unbalanced media. The presence of a ground reference may be necessary for some balanced media, depending on the specific type of transmission line used between the FC device connectors.

The interface specifications assume that all measurements are made after a mated connector pair, relative to the source or destination of the signal using a load equivalent to those of figure 36

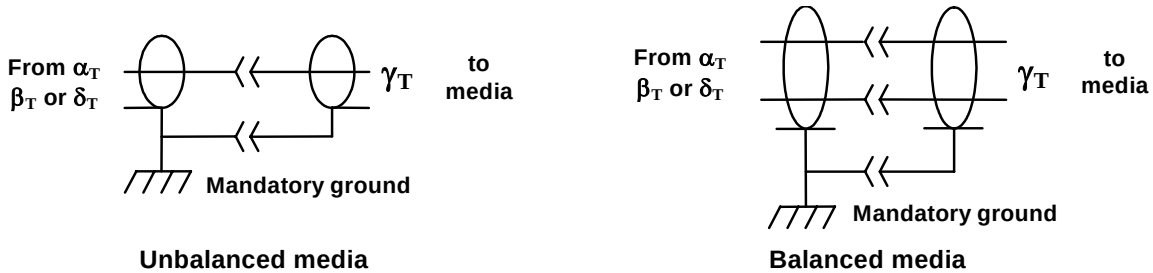

Figure 32 – Inter-enclosure transmitter compliance point γ_T

--`,,```,,,,````-`-`,,`,,`,`,,`---

Copyright International Organization for Standardization
Provided by IHS under license with ISO
No reproduction or networking permitted without license from IHS Not for Resale

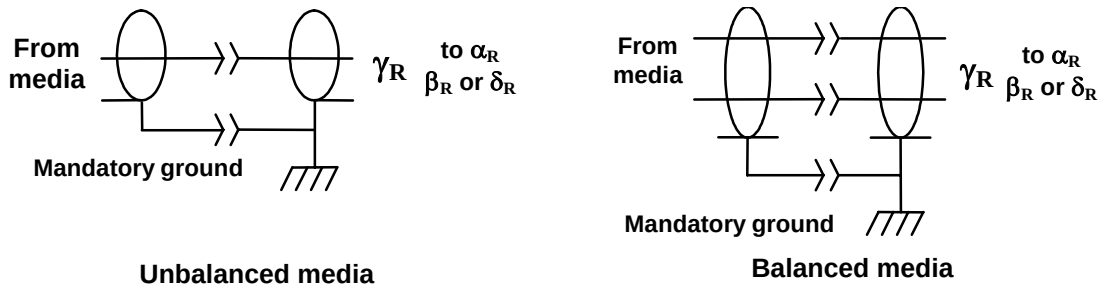

Figure 33 – Inter-enclosure receiver compliance point γ_R

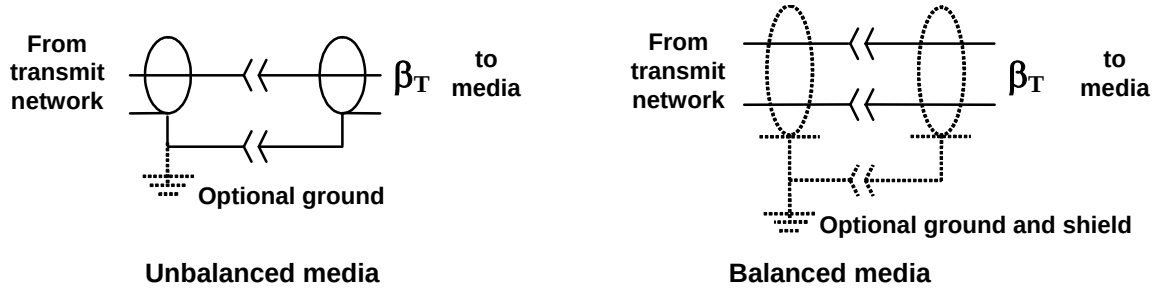

Figure 34 – Intra-enclosure transmitter compliance point β_T

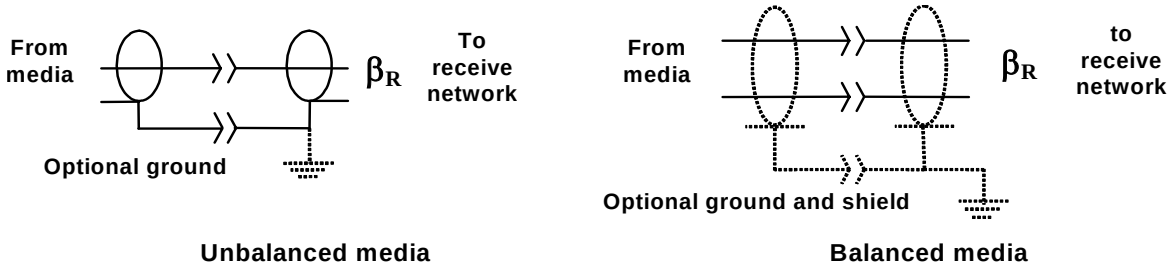

Figure 35 – Intra-enclosure receiver compliance point β_R

9.9 Driver characteristics

For all inter-enclosure TxRx Connections, the output driver shall be a.c. coupled to the cable through a transmission network.

For all intra-enclosure TxRx Connections the driver may be either a.c.-coupled or d.c.-coupled to the media.

The driver shall have the output voltages and timing listed in table 20 and table 22, measured at the designated interoperability points. The default point is γ_T for inter-cabinet TxRx Connections and β_T for

Copyright International Organization for Standardization
Provided by IHS under license with ISO
No reproduction or networking permitted without license from IHS
Not for Resale

intra-cabinet TxRx Connections. The measurements shall be made across a load equivalent to that shown in figure 36.

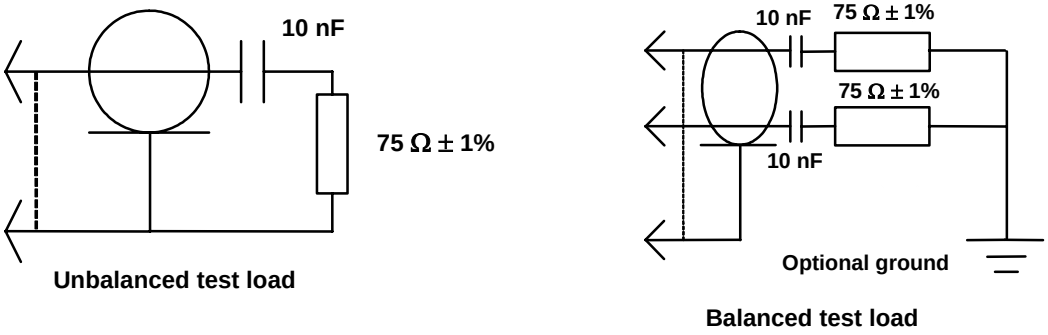

NOTE: 10 nF capacitors are required if output under test is not DC isolated.

Figure 36 – Test loads

The mask of the transmitter eye diagram is given in figure 27**.** The normalized amplitudes, Y1 and Y2, allow signal overshoots of 10 % and undershoots of 20 %. The driver shall meet both the normalized and absolute values.

9.10 Receiver characteristics

The receiver shall be a.c.-coupled to the media through a receive network. The receive network shall terminate the TxRx Connection by an equivalent impedance of 75 Ω or 150 Ω, as specified in table 24.

The receiver shall operate within the BER objective (10^{-12}) when an FC signal with valid voltage and timing characteristics is delivered to the interoperability point from an unbalanced 75 Ω (xxx-SE-EL-S) or balanced 150 Ω (xxx-DF-EL-S) source. The delivered FC signal shall be considered valid if it meets the voltage and timing limits specified in figure 28 and table 22 when measured across a load equivalent to those of figure 36.

Additionally, the receiver shall also operate within the BER objective when the signal at α_R has the additional sinusoidal jitter present that is specified in table 23. Jitter tolerance figures are given in table 23 for all interoperability points in a TxRx Connection. The figures given assume that any external interference occurs prior to the point at which the test is applied. When testing the jitter tolerance capability of a receiver the additional 0,1 UI of sinusoidal jitter may be reduced by an amount proportional to the actual externally induced interference between the application point of the test and α_R.

NOTE The addition of additional jitter reduces the eye opening in both voltage and time; see 9.5.4.

Copyright International Organization for Standardization
Provided by IHS under license with ISO
No reproduction or networking permitted without license from IHS Not for Resale

9.11 Example TxRx Connections

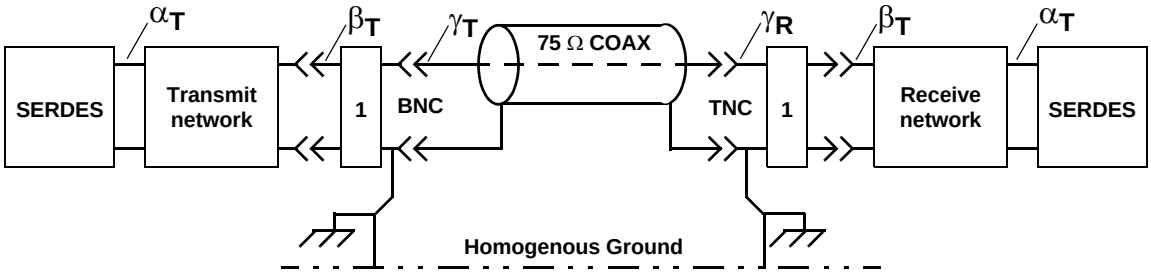

Key: 1 Active circuits and coupling networks may be required to ensure interoperability.

Figure 37 – Example xxx-SE-EL-S inter-enclosure TxRx with 75 Ω unbalanced cable

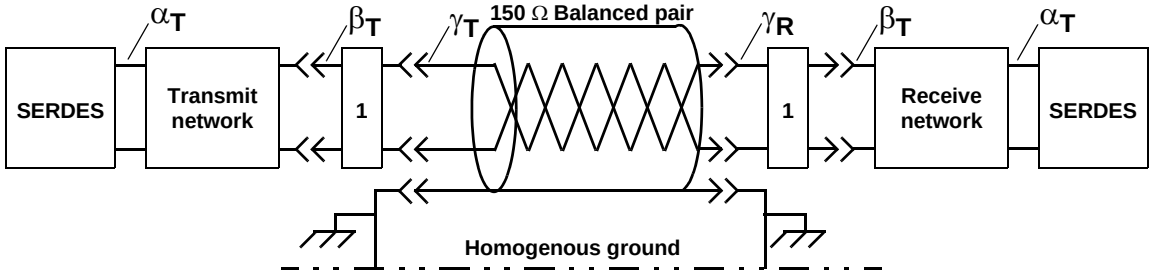

Key: 1 Active circuits and coupling networks may be required to ensure interoperability.

Figure 38 – Example xxx-DF-EL-S inter-enclosure TxRx with 150 Ω balanced cable

Copyright International Organization for Standardization
Provided by IHS under license with ISO
No reproduction or networking permitted without license from IHS
Not for Resale

10 Electrical cable plant and connector specifications

10.1 General

This clause defines the TxRx Connection requirements for a Fibre Channel electrical cable plant and its connectors.

It is the implementer's responsibility to ensure that the impedances, attenuation (loss), jitter and shielding are within the operating limits of the TxRx Connection type and data rate being implemented.

An optional equalizer network may exist and operate as part of the cable plant. It shall be used to correct for frequency selective attenuation loss of the transmitted signal, as well as timing variations due to the differences in propagation delay time between higher and lower frequency components. An equalizer should need no adjustment.

For those cables containing embedded equalization circuits, the operation of the cable may be both data rate and length specific. All cables containing such circuits shall be marked with information identifying the specific designed operational characteristics of the cable assembly.

10.2 Shielding

Cable assemblies shall have a transfer impedance through the shield(s) of less than 100 mΩ/m from d.c. through the baudrate/2 equivalent frequency.

Cable shield(s) on inter-enclosure cables shall be earthed through the bulkhead connector shell(s) on both the transmitter and receiver ends, as shown in figure 32, figure 33, figure 37 and figure 38.

10.3 Cable interoperability

All styles of balanced cables are interoperable, i.e., electrically compatible with minor impact on TxRx Connection-length capability when intermixed. The unbalanced (coaxial) cables are also interoperable. Interoperability implies that the transmitter and receiver level and timing specifications are preserved, with the trade-off being distance capability in an intermixed system. Any electrically compatible, interoperable unbalanced or balanced cables may be used to achieve goals of longer distance, higher data rate or lower cost as desired in the system implementation, if they are connector, impedance and propagation mode compatible.

When cable types are mixed, it is the responsibility of the implementer to validate that the lengths of cable used do not distort the signal beyond the received signal specifications referenced in 9.10

The balanced cables are incompatible with unbalanced cables in terms of characteristic impedance, mode of connection to the transceiver and other electrical and mechanical parameters. Different connectors are specified for balanced and unbalanced cables to avoid user mixing.

At signaling rates of 1 062,5 MBd or greater, particular attention shall be given to the transition between cable segments. No more than four connection points should be present from the transmitter to the receiver.

10.4 Unbalanced cable connectors

10.4.1 Inter-enclosure connectors for unbalanced cable

10.4.1.1 General

Connections between enclosures require the use of shielded cable assemblies, terminated in polarized shielded connectors. All unbalanced cable types shall be connected using either style-1 or style-2 unbalanced connectors.

Standard cable assemblies shall have style-1 connectors at both ends of the cable or style-2 connectors at both ends of the cable. Cables may also be constructed with both a style-1 and style-2 connector for use in mixed connector installations or to adapt from one style to the other.

--`,,```,,,,````-`-`,,`,,`,`,,`---

Copyright International Organization for Standardization
Provided by IHS under license with ISO
No reproduction or networking permitted without license from IHS Not for Resale

The cable connector shall be the plug or male connector while the bulkhead connector shall be the receptacle or female connector.

10.4.1.2 Style-1 unbalanced cable connector

The style-1 connectors for unbalanced cable shall be industry standard 75 Ω BNC and TNC type connectors, as shown in figure 37. The electrical performance of the 75 Ω BNC and TNC connectors shall be compatible with video style connectors specified in IEC 60169-8 (BNC) and IEC 60169-17 (TNC).

The mechanical compatibility for BNC type (bayonet lock coupling) connectors is defined by IEC 60169-8. The mechanical compatibility for TNC type (threaded coupling) connectors is defined in IEC 60169-17. The primary use of unbalanced cables is for interconnection of enclosures.

These two connector types (BNC and TNC) are specified to provide polarization to prevent the incorrect connection of transmitter-to-transmitter or receiver-to-receiver. The end of such a cable, connected to an unbalanced transmitter, shall be implemented with a male BNC-type connector and the receiving end shall be implemented with a male TNC-type connector. The transmitter and receiver shall be implemented using female BNC and TNC type connectors respectively.

Should a case occur where, through a cabling error or the incorrect use of in-line splices or other adapters, two transmitters or receivers are directly connected, no damage shall occur to any transmitter, receiver or other TxRx Connection component in the system. The TxRx Connection shall be able to withstand such an invalid connection without component failure or degradation for an indefinite period.

10.4.1.3 Style-2 unbalanced cable connector

The style-2 connectors for unbalanced cable shall be industry standard 50 Ω SMA, see IEC 60169-15. The electrical performance of the 50 Ω SMA connectors shall be compatible with IEC 60169-15.

The mechanical compatibility for SMA-type connectors is defined in IEC 60169-15. Primary uses of unbalanced cables are for interconnection of enclosures.

Both ends of such a cable shall be implemented with a male SMA-type connector. The transmitter and receiver shall be implemented using female SMA-type connectors.

Should a case occur where, through a cabling error or the incorrect use of in-line splices or other adapters, two transmitters or receivers are directly connected, no damage shall occur to any transmitter, receiver or other TxRx Connection component in the system. The TxRx Connection shall be able to withstand such an invalid connection without component failure or degradation for an indefinite period.

10.4.2 Intra-enclosure connectors for unbalanced cable

Connections within an enclosure do not normally require the same level of shielding as connections external to an enclosure. For these internal connections an alternative connector may be used that interfaces with industry standard headers with 0,64 mm (0,025 in) square posts on 2,54 mm (0,100 in) centre spacing. Due to size constraints, this connector is only intended for use with the miniature coaxial cable.

These connectors are generally not entirely shielded and leakage of r.f.I may occur. A shielded enclosure and/or other r.f. leakage control techniques such as ferrite beads or lossy tubing is recommended for compliance with EMC standards, even with double shielded cables.

Copyright International Organization for Standardization
Provided by IHS under license with ISO
No reproduction or networking permitted without license from IHS Not for Resale

10.5 Balanced cable connectors

10.5.1 General

Balanced cables, when used in full duplex TxRx Connections, shall be wired in a crossover fashion as shown in figure 39, with each pair being attached to the transmit contacts at one end of the cable and the receive contacts at the other end.

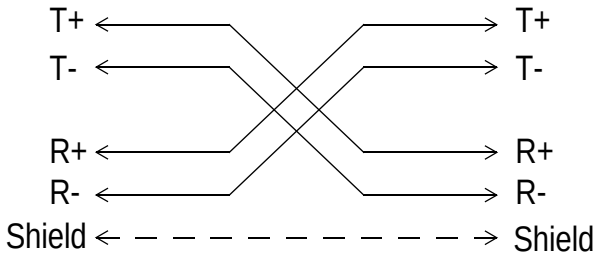

Figure 39 – Balanced cable wiring

10.5.2 Inter-enclosure connectors for balanced cable

10.5.2.1 General

Connections between enclosures require the use of shielded cable assemblies, terminated in polarized shielded connectors. All balanced cable types shall be connected using either style-1 or style-2 balanced cable connectors.

Standard cable assemblies shall have style-1 connectors at both ends of the cable or style-2 connectors at both ends of the cable. Cables may also be constructed with both a style-1 and style-2 connector for use in mixed connector installations or to adapt from one style to the other.

The cable connector shall be the plug or male connector while the bulkhead connector shall be the receptacle or female connector.

Both styles of inter-enclosure connectors may be populated with additional contacts to support additional functions. The presence of such contacts in the connector assemblies does not imply support for additional functions.

The suggested use for these additional contacts or contact locations is listed table 25.

Table 25 – Optional inter-enclosure contact uses

Contact Name	Pin Number	
	Style 1	Style 2
Power supply, nominal +5 V d.c.	2	7
Module fault detect	3	4
Mechanical key	4	
Output disable	7	5
Signal ground / +5 V d.c. return	8	2

10.5.2.2 Style-1 balanced cable connector

The style-1 connector for balanced cable is the 9-pin shielded D-subminiature connector conforming to IEC 60807-3. The plug (male) half of the connector shall be mounted on the cable. One connector is

Copyright International Organization for Standardization
Provided by IHS under license with ISO
No reproduction or networking permitted without license from IHS Not for Resale

required to connect both transmitting and receiving shielded pairs at one port. The connector pin assignments are shown in figure 40. Unused pin positions within the connector body are reserved. Electrical and mechanical details are also given in IEC 60807-3.

Should a case occur where, through a cabling error or the incorrect use of in-line splices or other adapters, two transmitters or receivers are directly connected, no damage shall occur to any transmitter, receiver or other TxRx Connection component in the system. The TxRx Connection shall be able to withstand such an invalid connection without component failure or degradation for an indefinite period.

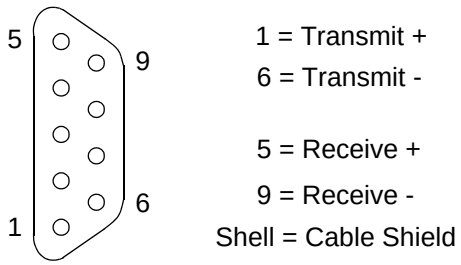

Figure 40 – Style-1 balanced connector plug contact locations

10.5.2.3 Style-2 balanced cable connector

The style-2 connector for balanced cables, shown in figure 41, shall conform to the mechanical and electrical characteristics of IEC 61076-3-103. The connector pin assignments are shown in figure 42. Electrical and mechanical details are given in IEC 61076-3-103.

Should a case occur where, through a cabling error or the incorrect use of in-line splices or other adapters, two transmitters or receivers are directly connected, no damage shall occur to any transmitter, receiver or other TxRx Connection component in the system. The TxRx Connection shall be able to withstand such an invalid connection without component failure or degradation for an indefinite period.

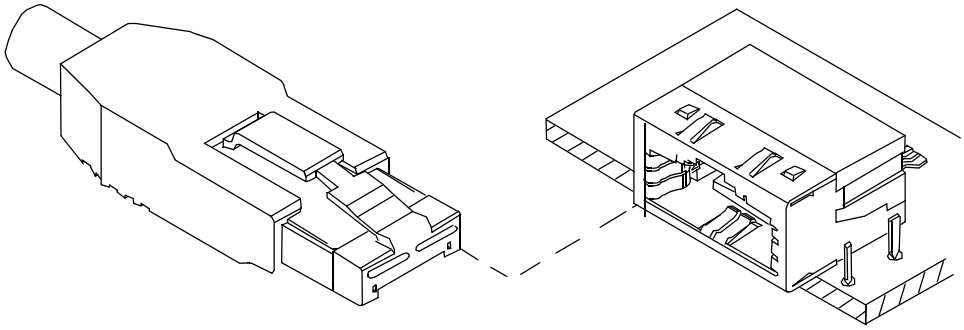

Figure 41 – Style-2 plug and receptacle

10.5.2.3.1 Style-2 plug

The plug (male) half of the connector shall be mounted on the cable. One connector is required to connect both the transmitting and the receiving shielded pairs at one port. The style-2 plug is shown in the left half of figure 41.

10.5.2.3.2 Style-2 receptacle

The style-2 receptacle is shown in the right half of figure 41. This connector mates with both transmit and receive balanced pairs. The connector contains eight pin locations plus an external shield. Pin locations 1,

Copyright International Organization for Standardization
Provided by IHS under license with ISO
No reproduction or networking permitted without license from IHS
Not for Resale

3, 6 and 8 shall be populated in the connector body. Unused pin positions within the connector body are reserved. The connector pin assignments are shown in figure 42.

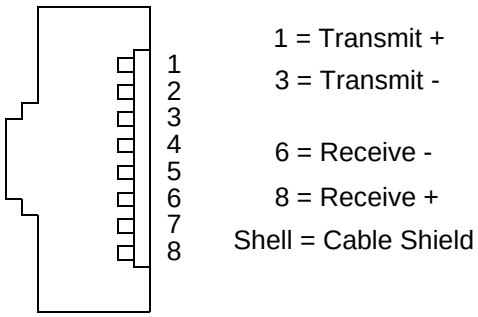

Figure 42 – Style-2 balanced connector receptacle contact locations

10.5.3 Intra-enclosure connectors for balanced cable

10.5.3.1 General

TxRx Connections that remain entirely within an enclosure do not normally require the same level of shielding as connections external to an enclosure. These connections may be implemented with any number or mix of transmission line types. The target differential impedance for these intra-enclosure connections is 150 Ω.

Due to the shorter distances within an enclosure and the uncontrolled impedance of the mating connectors, it is advised that source matching be used to limit the effect of signal reflections.

Any number of styles of connectors, including the balanced connectors documented in 10.5.2, may be used to implement intra-enclosure TxRx Connections. Connectors for these connections are specified by the desired functionality of the connectors. These connectors are not entirely shielded and leakage of r.f.I may occur.

A shielded enclosure (or other r.f. leakage control techniques such as ferrite beads or lossy tubing) is recommended for compliance with EMC standards, even when used with double-shielded balanced cables.

10.5.3.2 Integral FC device balanced connector

The integral intra-enclosure connector for FC devices supports multiple TxRx Connections. It is documented to carry power for the FC device as well as numerous configuration and status options. Internal FC devices that require these capabilities shall use the 40-position SCA-2 connector specified in EIA-700 A0AF (SP-3652) and shall conform to the signaling requirements of SFF-8451 and SFF-8045.[2]

This connector is shown in figure 43 and is primarily designed for backplane or rack mount applications. The contact locations are defined in figure 44.

2. SFF documents are available by FAX access from 408-741-1600 or may be purchased from Global Engineering at 303-792-2181. These documents may become international standadards at a later date; they are currently new work proposals.

Copyright International Organization for Standardization
Provided by IHS under license with ISO
No reproduction or networking permitted without license from IHS Not for Resale

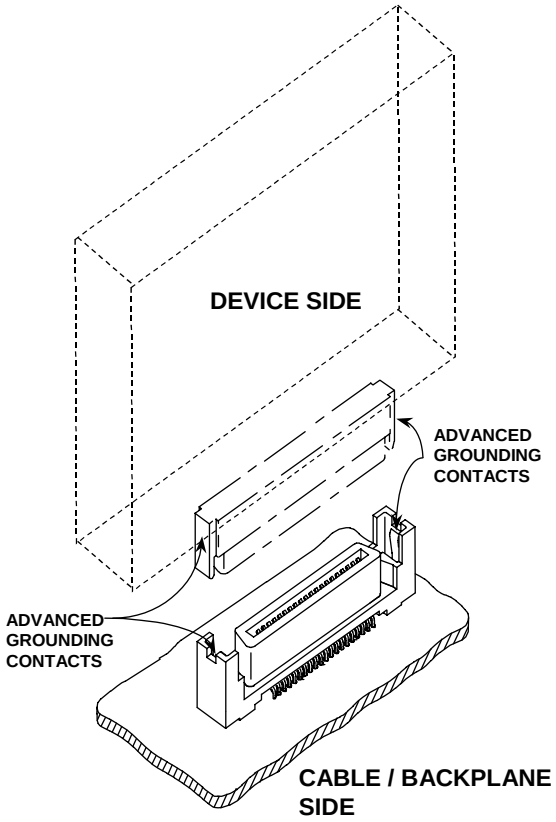

Figure 43 – Intra-enclosure integral Fibre Channel device connector

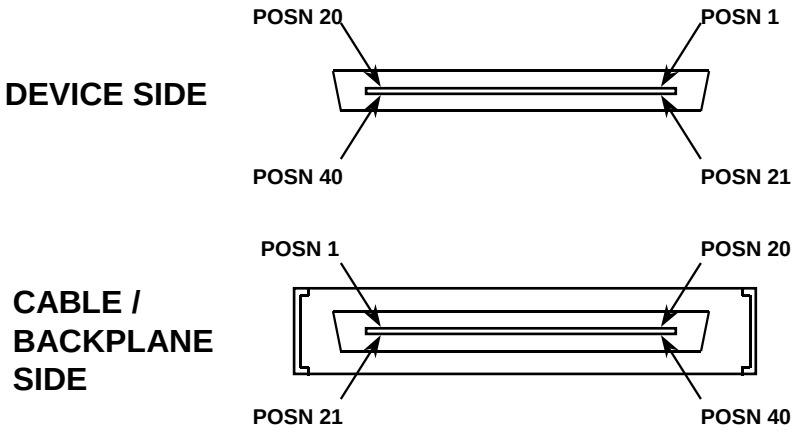

Figure 44 – Contact numbering for integral FC device connector

Copyright International Organization for Standardization
Provided by IHS under license with ISO
No reproduction or networking permitted without license from IHS
Not for Resale

10.5.4 Non-device inter-enclosure connectors

Internal connectors that are not directly attached to the FC devices (non-device internal connectors) are not controlled by this standard. These connectors may be used within the enclosure as part of the TxRx Connection. Such connections are still required to meet the performance requirements of the transmit and receive signals at the compliance points.

Copyright International Organization for Standardization
Provided by IHS under license with ISO
No reproduction or networking permitted without license from IHS Not for Resale

Annex A
(informative)

Test methods

A.1 General

This annex defines terms, measurement techniques and conditions for testing jitter and wave shapes. This annex deals with issues specific to Fibre Channel and is not intended to supplant standard test procedures referenced in the specifications.

This annex directly applies to verification of terminal equipment compliance to the Fibre Channel specification and the relevant optical and electrical interface specifications. In some instances these procedures may be applicable to measurement of a single component of the system.

A.2 Transmit interface

A.2.1 Optical spectrum measurement

The centre wavelength and spectral width RMS value of the transmit interface can be measured as appropriate using an optical spectrum analyzer as defined in IEC 61280-1-3. The patch cable used to couple the light from the transmit interface to the spectrum analyzer should be short to minimize spectral filtering by the patch cable. The transmit signal during the measurement should be any valid 8B/10B code pattern.

A.2.2 Waveforms

A.2.2.1 Mask of the eye diagram

The mask of the eye diagram is covered in clause 6 and in 9.5. Measurements should be performed with traffic consisting of frames of data so that the receiving equipment may perform its normal synchronizing operations. Recomended frame contents are detailed in the MJSQ technical report (see ISO/IEC TR 14165-117).

Eye mask testing should be performed with a bit-rate trigger. To accomplish the desired low-frequency jitter response, the trigger may be derived from the data stream being measured with a low noise Golden PLL as described in the MJSQ technical report (see ISO/IEC TR 14165-117).

Eye mask testing (and several measurement in FC-PI) require determination of the average voltage or power amplitude level of the waveform, averaged over at least 1 000 bit times. Note that due to waveform distortions, this is frequently NOT the same as the mid-value halfway between logic 0 and logic 1.

A.2.2.2 Pulse parameters and rise/fall times

Rise and fall times may be difficult to measure on terminal equipment. If jitter is less than rise and fall times, the following method is preferred.

a) Configure the device under test to transmit frame data such as CRPAT.

b) Connect the device to the measurement system and trigger the scope with a bit-rate trigger (see A.2.2.1).

c) Measure the 0 % and 100 % points as described by the appropriate relative mask test methods specified in clause 6 and clause 9.

d) Calculate the 20 % and 80 % levels. Setup horizontal histograms centreed at these levels with minimal vertical openings and horizontal boundaries set to distinguish the rising and falling portions of the eye crossing. Measure the mean time of 4 positions:

rising edge left of the crossing (T_left bottom)

rising edge right of the crossing (T_right top)

Copyright International Organization for Standardization
Provided by IHS under license with ISO
No reproduction or networking permitted without license from IHS Not for Resale

falling edge left of the crossing (T_left top)

falling edge right of the crossing (T_right bottom)

e) T_rise = T_right,top - T_left,bottom; T_fall = T_right bottom - T_left,top

If this method is not possible (for example, if jitter exceeds the rise or fall times) or testing is being done at a component level, it may be appropriate to transmit a low frequency square wave such as K28.7 (but not D21.5 or D10.2) and trigger the scope with a pattern trigger. If this method is used, measurements can be performed in the normal manner using built-in scope algorithms, if they exist.

An optical measurement system may have a low pass fourth-order Bessel-Thomson transfer function (described in 6.3.2) or equivalent. If a separate filter having a fourth order Bessel-Thomson transfer function is used, care should be taken with source and load impedances of the equipment connected to the filter. In filters constructed with common techniques the proper transfer function is obtained only when the source and load impedances are at a specified value over the frequency range of interest. Other impedance values may result in the introduction of significant waveform distortion.

A.2.3 Jitter measurements

The jitter output specifications apply in the context of a 10^{-12} bit error rate (BER). Jitter may be measured with methods as described in the MJSQ technical report (see ISO/IEC TR 14165-117). The optical measurement system may have a low pass fourth-order Bessel-Thomson transfer function (see 6.3.2) or equivalent. A simplified test method for jitter output, not documented in ISO/IEC TR 14165-117 is described in A.4.

A.2.4 Skew measurement

A skew measurement is valid only for balanced driver configurations. The measurement is to be made at the sink side of mated connector pairs and across a load equivalent to those shown in figure 36. These are single-ended measurements and assume a.c. coupling between the oscilloscope and the driver. A valid pattern such as CRPAT or primitive sequence should be transmitted during this test.

For each signal (true and complement), measure the mean of the eye crossing using a horizontal histogram vertically centreed at the average value of the waveform. The same stable trigger, coherent to the data stream, shall be used for both the true and complement signals. Skew is defined as the time difference between the two means.

A.3 Receive interface

The source of the receive interface test signal may be any source conforming to the worst case limits of the receive interface specifications of the media under test.

The test should be performed with traffic consisting of frames of data so that the receiving equipment may perform its normal synchronizing operations. Recomended frame contents are detailed in the MJSQ technical report (see ISO/IEC TR 14165-117).

A compliant port should receive the test signal over the range of conditions specified with a BER $\leq 10^{-12}$. The requirements in clause 6 were written in terms of BER to facilitate the specification of components to be used in a particular implementation.

The characteristics of the test signal may be measured with the methods outlined in the MJSQ technical report (see ISO/IEC TR 14165-117). A simplified test method for jitter output, not documented in MJSQ is described in A.4.

A.4 Approximate curve-fitting for BERT scan

Clauses 10 and 14 and D.2 of ISO/IEC TR 14165-117 describes a technique for using a BERT scan to determine eye opening and jitter. For highest accuracy, the bathtub curve should be measured over a high number of Bit Error Rate (BER) points and curve-fitted with a least-squares method to estimate equivalent

Copyright International Organization for Standardization
Provided by IHS under license with ISO
No reproduction or networking permitted without license from IHS Not for Resale

DJ, *RJ* and *TJ* values. However, a simple and fast method for estimating these values may be applied using only 2 measurement points.

The following steps describe a process for estimating equivalent *RJ*, *DJ* and *TJ* values from a 2 point BERT scan measurement:

- Measure the eye opening at 2 BERs (example BER values are 1E-9 and 1E-5). Define one of the BER values as BER_0 and the other as BER_1; define t_0 for the opening at BER_0 and t_1 for the opening at BER_1.
- For each BER value, determine the associated *Q* from the inverse normal cumulative probability distribution. For example, these can be calculated using: *Q*_n = -q_{norm}[(2/TD)*BER_n, 0, 1] in Mathcad. For 1E-5, *Q* = 3,99 and for 1E-9, *Q* = 5,8. (*Q* = 6,87 for 1E-12). TD is the transition density of the data pattern being used for the measurement. A typical value for 8B10B of TD = 0,6 may be used.
- Calculate the jitter results. RJ_{rms} is the rms (1 σ) value for *RJ*, whereas *DJ* and *TJ* are given as p-p values.

Q is the peak number of RMS jitter magnitudes for the given BER. The random jitter may then be expressed as:

Equation 1 – Random jitter

$$RJ_{\mathrm{RMS}} = 0{,}5\left|\frac{t_1 - t_0}{Q_1 - Q_0}\right|$$

Equation 2 – Deterministic jitter

$$DJ = UI - t_0 - (2 \cdot (Q_0 \cdot RJ_{\mathrm{RMS}}))$$

where UI = 941,2 ps for 1 062,5 GBd, etc

Equation 3 – Total jitter

$$TJ = DJ + 13{,}73 \cdot RJ_{\mathrm{RMS}}$$

NOTE the minimum value for measured BER is constrained by test time (10 errors are suggested as an absolute minimum to get reasonable statistical confidence); the maximum value is constrained by potential departure of actual results from the assumed curve fit shape (BER = 1E-4 should be maximum value used). Otherwise, the farther apart the 2 points are, the lower the susceptibility to noise.

A.5 Relative intensity noise (RIN) (OMA) measuring procedure

A.5.1 General

One of the measurements required to determine RIN specifies that the laser transmitter be powered to its d.c. level but not transmitting a.c. data. This may not be possible for some FC devices unless special test modes are available. If it is not possible to set the laser transmitter into this mode while in the FC device, then testing should be done at the component level.

Copyright International Organization for Standardization
Provided by IHS under license with ISO
No reproduction or networking permitted without license from IHS Not for Resale

A.5.2 Test objective

When lasers which are subject to reflection induced noise effects are operated in a cable plant with a low optical return loss the lasers will produce an amount of noise which is a function of the magnitude and polarization state of the reflected light.

The magnitude of the reflected light tends to be relatively constant. However, the polarization state varies significantly as a function of many cable parameters, particularly cable placement. In a cable plant which is physically fixed in place the variation is slow. If the fibre is subject to motion, such as occurs in a jumper cable, the change may be sudden and extreme. The effect is unpredictable changes in the noise from the laser with the result that the communication link may exhibit sudden and unexplainable bursts of errors.

The solution to this is to assure that the lasers used do not generate excessive noises under conditions of the worst case combination of polarization and magnitude of reflected optical signal.

The noise generated is a function of the return loss of the cable plant. For the Fibre Channel the specified return loss is 12 dB resulting in the notation of RIN [12] for the relative intensity noise.

A.5.3 General test description

The test arrangement is shown in figure A.1. The test cable between the Device Under Test (DUT) and the detector forms an optical path having a single discrete reflection at the detector with the specified optical return loss. There shall be only one reflection in the system as the polarization rotator can only adjust the polarization state of one reflection at a time.

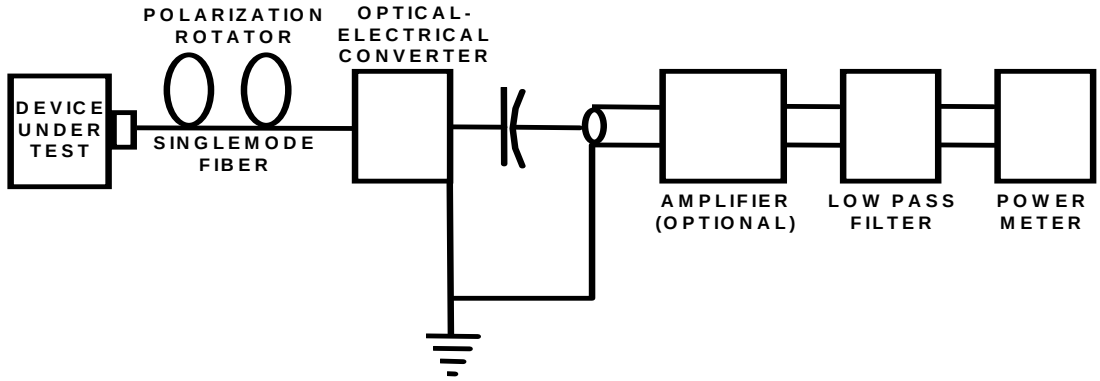

Figure A.1 – RIN (OMA) test setup

Copyright International Organization for Standardization
Provided by IHS under license with ISO
No reproduction or networking permitted without license from IHS
Not for Resale

Both the OMA power and noise power are measured by a.c. coupling the O/E converter into the high frequency electrical power meter. If needed, an amplifier may be used to boost the signal to the power meter.

A low pass filter is used between the photodetector and the power meter to limit the noise measured to the passband appropriate to the data rate of interest.

In order to measure the noise the modulation to the DUT shall be turned off.

A.5.4 Component descriptions

Test cable

The test cable and detector combination shall be configured for a single dominate reflection with an optical return loss of 12 dB. (The Optical return loss may be determined by the method of either IEC 61300-3-3 or IEC 61300-3-6) If multiple lengths of cable are required to complete the test setup they should be joined with splices or connectors having return losses in excess of 30 dB. The length of the test cable is not critical but should be in excess of 0,5 m.

Polarization rotator

The polarization rotator shall be capable of transforming an arbitrary orientation elliptically polarized wave into a fixed orientation linearly polarized wave. A polarization rotator consisting of two quarter wave retarders has the necessary flexibility.

O/E converter (and amplifier)

The O/E converter may be of any type which is sensitive to the wavelength range of interest. The frequency response of the O/E converter shall be higher than the cut-off frequency of the low pass filter.

If necessary, the noise may be amplified to a level consistent with accurate measurement by the power meter.

Filter

The low pass filter shall have a 3 dB bandwidth of approximately 75 % of the bit rate. Recommended values are shown in table A.1. The total filter bandwidth used in the RIN calculation shall take the low frequency cut-off of the d.c. blocking capacitor into consideration. The low frequency cutoff is recommended to be <1 MHz.

Table A.1 – Filter 3 dB point

Bit rate	Filter 3dB point
1,062 5 Gbit/s	800 MHz
2,125 Gbit/s	1 600 MHz
4,250 Gbit/s	3 200 MHZ

The filter should be placed in the circuit as the last component before the power meter so that any high frequency noise components generated by the detector/amplifier are eliminated. If the power meter used has a very wide bandwidth care should be taken in the filter selection to ensure that the filter does not lose its rejection at extremely high frequencies.

Power Meter

The power meter should be an r.f. type designed to be used in a 50 Ω coaxial system. The meter shall be capable of being zeroed in the absence of input optical power to remove any residual noise from the detector or its attendant amplifier, if used.

An oscilloscope with signal analysis capabilities may be used instead of an r.f. power meter. Be sure that only a.c. signals (not the optical DC value) are measured. Canceling of instrumentation noises may be done by subtracting the dark power (measured when no signals are present) from the measurement for P_N and P_M. If root-mean-square (rms) signals are measured, be sure they are squared before subtracting dark noise or applying them in Equation 4.

--`,,```,,,,````-`-`,,`,,`,`,,`---

Copyright International Organization for Standardization
Provided by IHS under license with ISO
No reproduction or networking permitted without license from IHS Not for Resale

A.5.5 Test Procedure

a) Connect and turn on the test equipment. Allow the equipment to stabilize for the manufacturers recommended warm up time.

b) With the DUT disconnected zero the power meter to remove the contribution of any noise power from the detector and amplifier, if used.

c) Connect the DUT, turn on the laser, and ensure that the laser is not modulated. This may not be possible in some FC devices unless special test modes are available.

d) Operate the polarization rotator while observing the power meter output to maximize the noise read by the power meter. Note the maximum power, P_N.

e) Turn on the modulation to the laser and note the power measurement, P_M. The recommended data pattern is a repeating sequence of K28.7 s with alternating disparity. If a different data pattern is used, a correction factor should be applied to the RIN value. For example, if a high transition density pattern is used, such as repeating IDLEs, then 2 dB should be subtracted from the result of equation 4. If a frame pattern such as CRPAT or other unknown sequence is used, then 1 dB should be subtracted from the result of equation 4. Both of these correction factors are approximate.

f) Calculate *RIN* from the observed detector current and electrical noise by use of the equation:

Equation 4 – Relative intensity noise

$$RIN_{12}\ (\text{OMA}) = 10\ \lg\ [P_N/(BW \times P_M)]\ (\text{dB/Hz})$$

Where:

RIN_{12} (OMA) is the Relative Intensity Noise referred to optical modulation amplitude

P_N is the Electrical noise power in watts with modulation off

P_M is the Electrical noise power in watts with modulation on

BW is the Low pass bandwidth of filter - high pass bandwidth of d.c. blocking capacitor [noise bandwidth of the measuring system (Hz)].

For testing multimode components or systems, the polarization rotator shall be removed from the setup and the single mode fibre replaced with a multimode fibre. Step d) of the test procedure shall be eliminated.

A.6 Optical modulation amplitude (OMA) test procedure

The recommended technique for measuring optical modulation amplitude requires test equipment with the following minimum requirements:

a) An oscilloscope and optical to electrical converter with bandwidth at least equal to the bit rate. The O/E converter shall be calibrated at the appropriate wavelength for the transmitter under test;

b) A fourth order Bessel-Thomson filter with a 3 dB bandwidth of 0,75 bit rate (optional).

While transmitting valid data such as CRPAT, use the following procedure to measure optical modulation amplitude.

a) Refer to figure A.3. With a valid waveform displayed on the oscilloscope, place the first cursor at the mean voltage level of the topline logic 1.

b) Refer to figure A.3. With a valid waveform displayed on the oscilloscope, place the first cursor at the mean voltage level of the baseline logic 0.

c) Measure and record the voltage difference between the two cursors.

--`,,```,,,,````-`-`,,`,,`,`,,`---

Copyright International Organization for Standardization
Provided by IHS under license with ISO
No reproduction or networking permitted without license from IHS Not for Resale

d) Calculate the OMA by multiplying the voltage difference by the conversion gain of the O/E converter at the wavelength of the laser source.

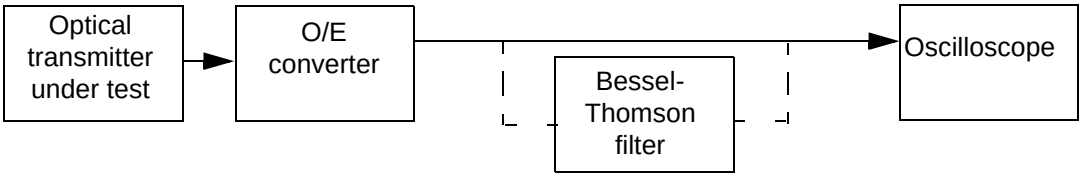

Figure A.2 – Optical modulation amplitude test equipment configuration

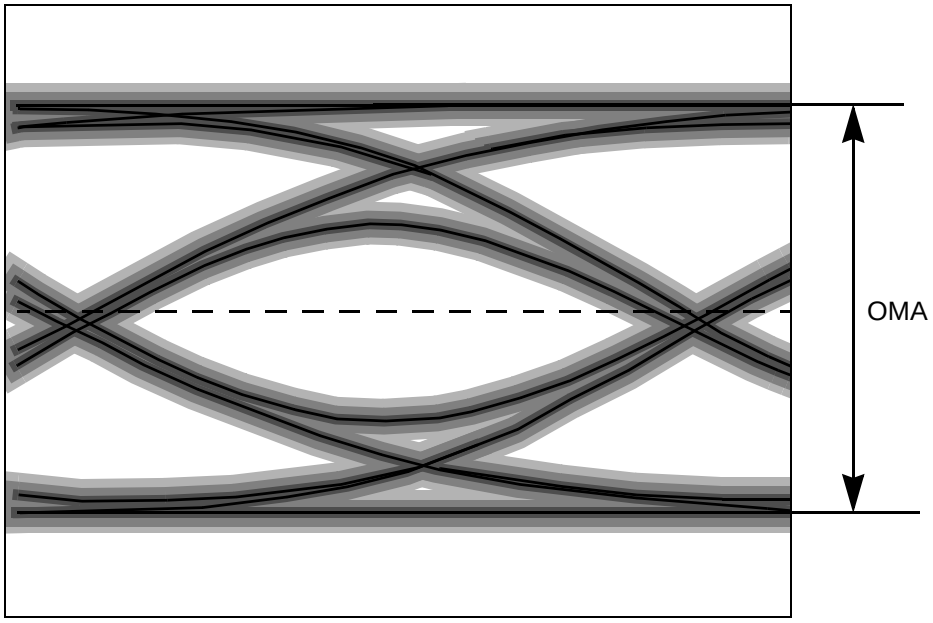

Figure A.3 – OMA measurement

An alternative method to approximate the *OMA* is to measure the average optical power *A* (in mW) and the extinction ratio E (absolute ratio NOT dB) as described in IEC 61280-4-1.

The approximate *OMA* = 2*A*((E-1)/(E+1))

A.7 Optical receiver stress test

Testing BER of optical receivers for conformance to the stressed receiver power penalty requirement shall use a signal at γ_R (see figure A.5) conforming to the requirements described in figure A.4. The receiver stress-test pattern is recommended to be CRPAT as described in the MJS technical report (see IISO/IEC 14165-117) and is conditioned by adding jitter as shown schematically in figure A.4. The horizontal eye closure as defined in figure A.4, shall be no less than 0,085 UI. The vertical eye closure penalty shall fall within the ranges specified in table 6 for *LW* or table 11 for *SW* 50 μm or table 12 for *SW* 62,5 μm. The *DJ* cannot be added with a simple phase modulation.

Copyright International Organization for Standardization
Provided by IHS under license with ISO
No reproduction or networking permitted without license from IHS
Not for Resale

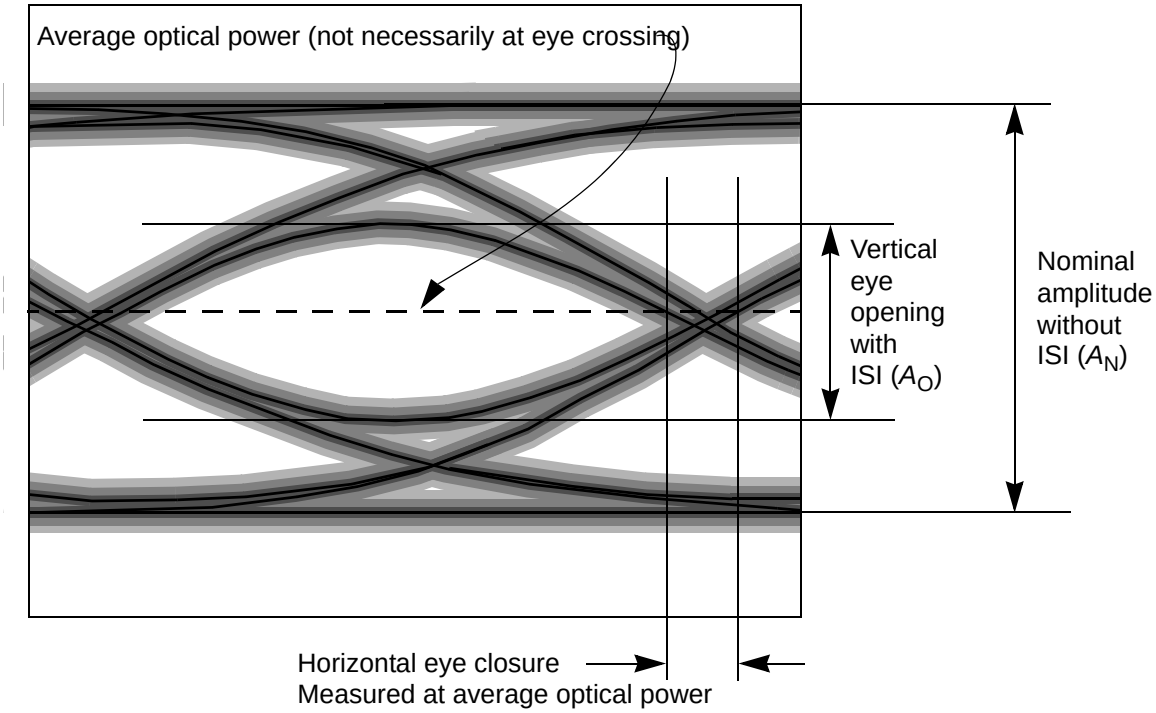

Figure A.4 – Required characteristics of the conformance test signal at γ_R

The vertical eye closure penalty is given by

$$\text{Vertical eye closure penalty [dB]} = 10 \times \lg \frac{A_O}{A_N}$$

where A_O is the amplitude of the eye opening and A_N is the normal amplitude without ISI, as measured in figure A.4.

Figure A.5 shows the recommended test set up for producing the stressed receive conformance test signal at γ_R. The coaxial cable is adjusted in length to produce the required additional jitter. Since the cable causes dispersion in addition to adding jitter, a limiting amplifier is used to restore fast rise and fall times. A Bessel-Thomson filter is selected to produce the minimum eye closure as specified in table 6 for *LW* or table 11 for *SW* 50 μm or table 12 for *SW* 62,5 μm. This conditioned signal is used to drive a high bandwidth linearly modulated laser source.

The vertical and horizontal eye closures to be used for receiver conformance testing are verified using a fast photodetector and amplifier. The bandwidth of the photodetector shall be at least 2 times the nominal number of Baud in GHz and be coupled through a fourth-order Bessel-Thomson filter at 1,5 times the

Copyright International Organization for Standardization
Provided by IHS under license with ISO
No reproduction or networking permitted without license from IHS
Not for Resale

nominal number of Baud to the oscilloscope input. Special care should be taken to ensure that all the light from the fibre is collected by the fast photodetector and that there is negligible mode selective loss.

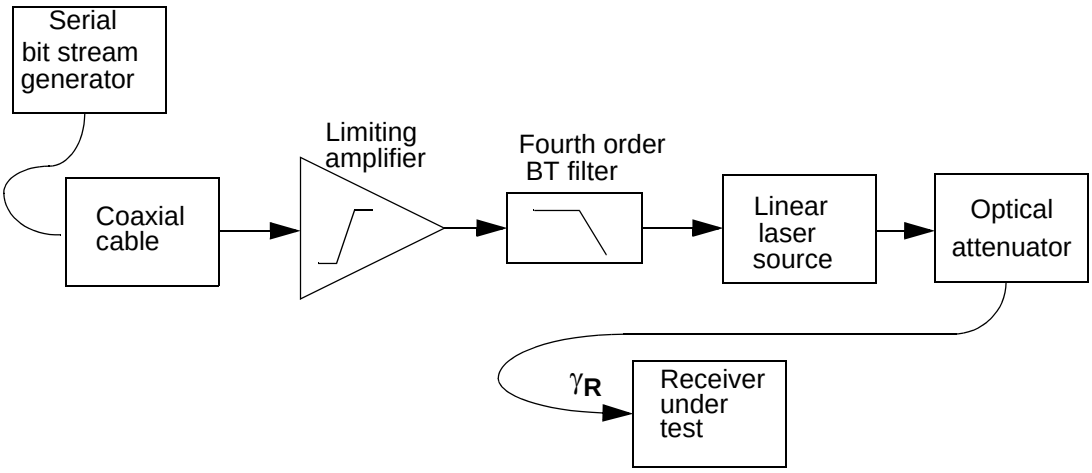

Figure A.5 – Apparatus for generating stressed receive conformance test signal at γ_R

A.8 Measurement of the optical receiver upper cutoff frequency

The measurement of the 3 dB and 10 dB electrical cutoff frequencies of the optical receiver shall be performed using the test setup shown in figure A.6. An r.f. signal is added asynchronously to the data stream, consisting of the CRPAT character stream, which is used to modulate the laser. The laser and modulator frequency response shall be calibrated to assure that an accurate measurement can be made. The measurements use the following steps.

a) With no applied r.f. modulation, connect the laser output to the receiver under test through an optical attenuator and set the optical power to a level between the stressed receiver sensitivity and the receiver OMA, min.

b) Turn on the r.f. modulation while maintaining the same average optical power.

c) At all tested frequencies, measure the necessary r.f. modulation amplitude (in dBm) required to achieve a constant BER (e.g. 10^{-6}).

d) The receiver upper cutoff frequency is calculated by normalizing the measured response from step c) to the frequency response of the measurement system.

e) The receiver 3 dB electrical upper cutoff frequency is that frequency where the corrected r.f. modulation amplitude increases by 3 dB (electrical). The receiver 10 dB electrical upper cutoff frequency is that frequency where the corrected r.f. modulation amplitude increases by 10 dB (electrical). Care should be taken to convert to electrical dB and to correctly compensate for the frequency response of the measurement system.

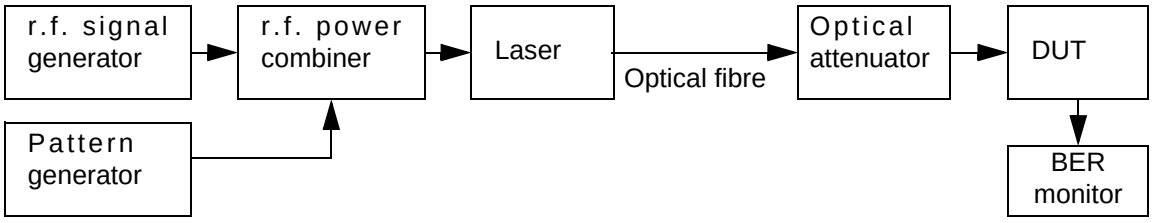

Figure A.6 – Test setup for receiver bandwidth measurement

Copyright International Organization for Standardization
Provided by IHS under license with ISO
No reproduction or networking permitted without license from IHS
Not for Resale

Annex B
(informative)

SERDES electrical interface example

B.1 General

This annex gives an implementation example of the electrical SERDES interface to meet the requirements of FC-PI. This example follows the Fibre Channel-High Speed Parallel Interface (FC-HSPI), T11.2 Project 1343-DT. Individual implementers may place all or part of these functions in a product or provide features in excess of this set to accomplish additional system functions or as an aid to testing. This interface could be used to drive electrical cables, optical modules or other elements.

Individual products may not have all of the interfaces exposed. Any unexposed interface is under no obligation to conform to this implementation. Conformance to this implementation is not required for Fibre Channel compliance. Fibre Channel compliance is obtained by conformance to the main body of this standard for exposed interfaces.

A block diagram of the modules for the example is shown in figure B.1.

Differing communications media will require differing controls. For this reason, this implementation is limited to consideration of the data interface and those control functions which will be common over all media. Therefore, the block labeled “Link Control” (and its related signals Link_Control and Link_Status) in figure B.1 will not be described for the implementation.

Note, the terms byte and character are used somewhat interchangeably throughout this Annex, because, at a higher level they both represent and reference the same 8-bit block of data. Whereas byte describes an 8-bit block of data without 8B10B encoding, character refers to that same 8-bit block of data with 8B10B encoding (to 10 serial bits).

Copyright International Organization for Standardization
Provided by IHS under license with ISO
No reproduction or networking permitted without license from IHS Not for Resale

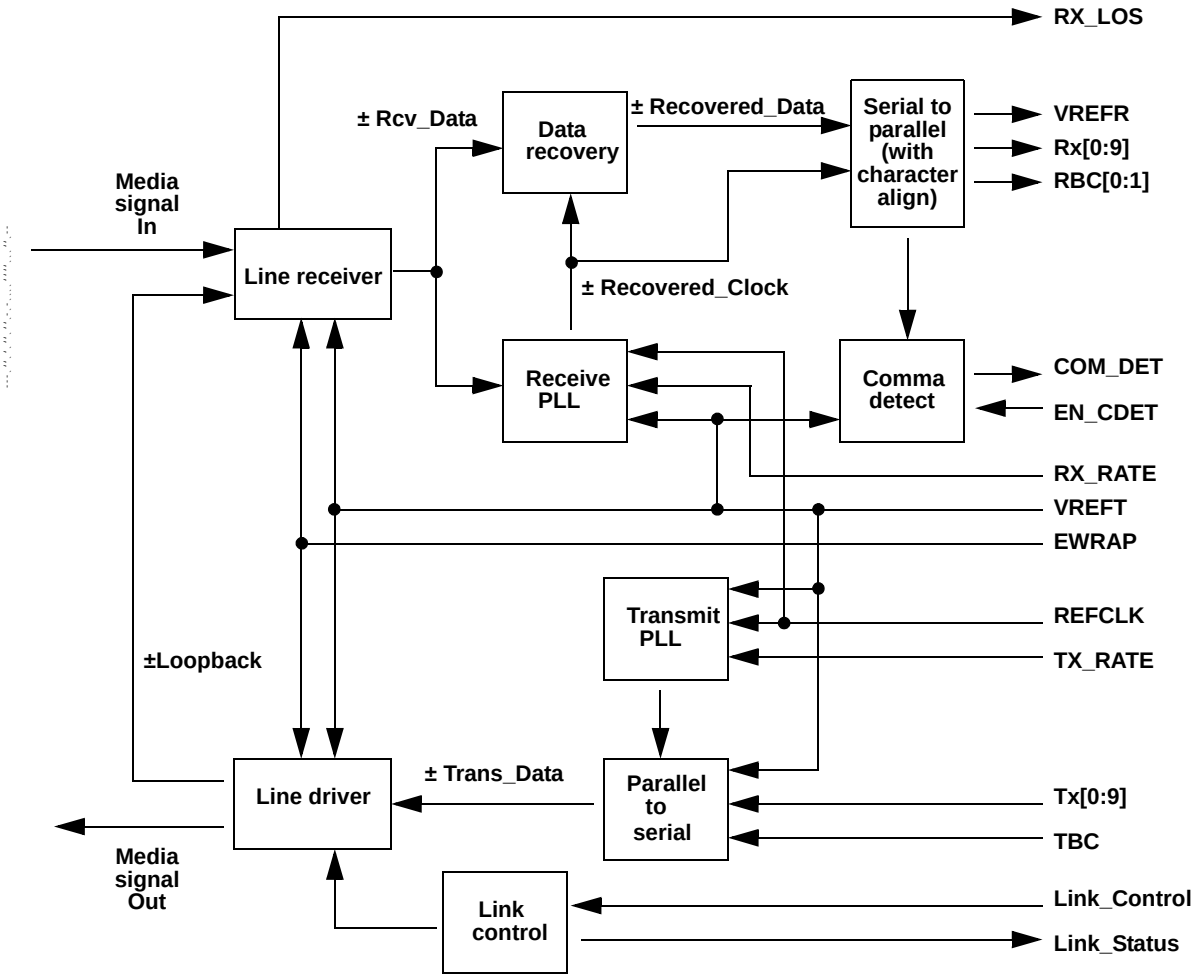

Figure B.1 – Fibre channel electrical interface example block diagram

B.2 Communications levels

B.2.1 General

Two communications levels are employed in this implementation example. High speed encoded clock and data signals are implemented in differential, positive ECL. Lower speed signals associated with parallel data transfers and function controls are implemented using SSTL_2-compatible voltage levels.

B.2.2 PECL

The high speed encoded clock and data signals are implemented in differential PECL. The signal swings are shown in figure B.2 referenced to the most positive voltage (V_{pos}) driving the PECL interface circuits. This voltage is typically 3,3 V in the case of low-voltage positive ECL (LVPECL). These outputs should be capable of driving 50 Ω transmission lines terminated in 50 Ω to 2,0 V below the reference level. The

Copyright International Organization for Standardization
Provided by IHS under license with ISO
No reproduction or networking permitted without license from IHS Not for Resale

drivers and receivers are intended to operate only within the package and are not required to have the electrostatic discharge protection required for driving box to box cables.

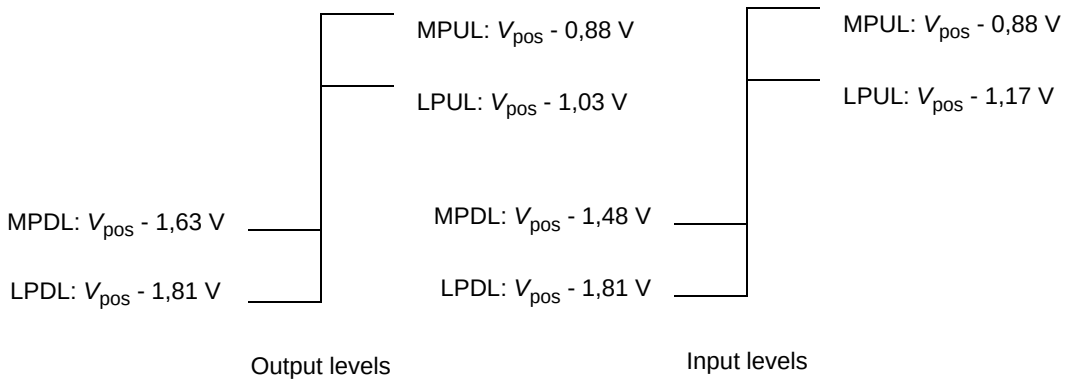

Figure B.2 – PECL communication levels

B.2.3 High speed Stub Series Terminated Logic - 2 (SSTL_2)

The parallel communications and control lines are implemented with SSTL_2 compatible voltage swings as shown in figure B.3 in order to provide compatibility with typical host system interfaces. Due to the relatively high speeds of the signals, termination for the driver circuits as suggested by the SSTL_2 standard is recommended to minimize ringing. Valid SSTL_2 voltage levels are specified relative to the transmitter or receiver reference level (V_{ref}[T|R]). The allowed range for V_{ref} is 1,15 V to 1,35 V. .

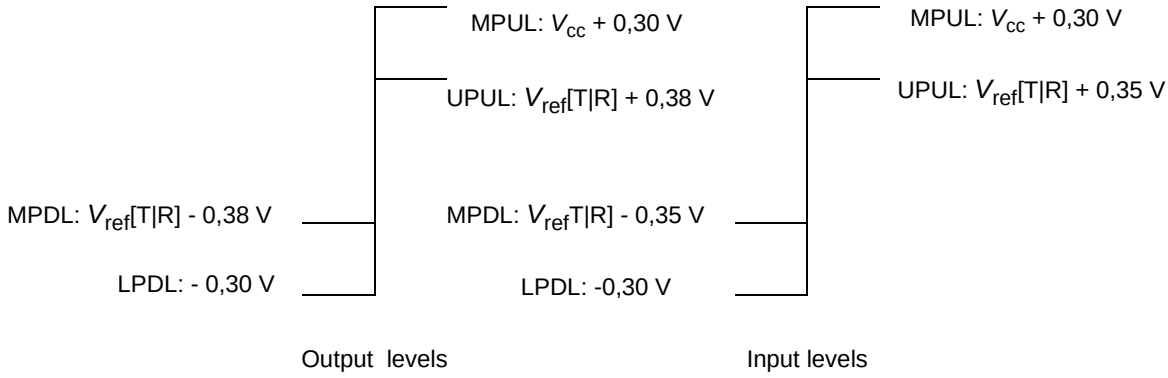

Figure B.3 – SSTL_2 compatible communication levels

B.3 Serial interfaces

B.3.1 General

All serial interfaces use differential PECL communication levels. They are indicated with a "±" prefix on signals in figure B.1.

B.3.2 Transmit serial interface

The transmit serial interface communicates the data from the serializer to the communications media.

B.3.3 Receiver serial interface

The receive serial interface communicates the serial received data (±Rcv_Data) from the media interface circuits to the clock extraction and Retiming circuits.

--`,,```,,,,````-`-`,,`,,`,`,,`---

Copyright International Organization for Standardization
Provided by IHS under license with ISO
No reproduction or networking permitted without license from IHS Not for Resale

B.3.4 Receiver Retimed clock and data serial interface

The receiver recovered data carries the recovered data (±Recovered_Data) and recovered clock(±Recovered_Clock) from the clock recovery circuits to the deserializer.

The serial ±Recovered_Clock lines carry the clock signal recovered from the Receive Serial Interface to the deserializer.

The relative timing between the ±Recovered_Data and the ±Recovered_Clock is shown in figure B.4. TBit is the reciprocal of the data rate. Valid data for ±Recovered_Data is indicated by the eye mask. For this example, ±Recovered_Data is valid 0,25 TBit before and 0,25 TBit after the falling edge of +/ Recovered_Clock.

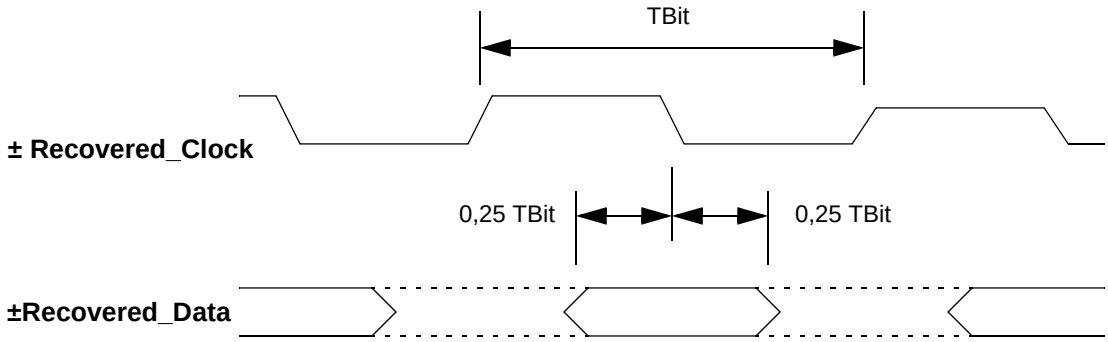

Figure B.4 – Recovered interface signal timing

B.4 Parallel interfaces

B.4.1 Voltage levels

The parallel interfaces are implemented using SSTL_2 compatible voltage levels. Exceptions to this are VREFT and VREFR, which are d.c. levels and REFCLK[0:1], which is PECL.

B.4.2 Bus data rate

The example allows for transmit and receive bus data transfers of 10 bits per data transfer of either 106,25 Mbit/s or 212,5 Mbit/s. An internal 10 bit parallel data transfer rate of 106,25 Mbit/s corresponds to an external serial data transfer rate of 1 062,5 Gbit/s and an internal 10 bit parallel data transfer rate of 212,5 Mbit/s corresponds to an external serial data transfer rate of 2 125 Gbit/s. The Tx[0:9] bus rate is controlled by TX_RATE and the Rx[0:9] bus rate is controlled by RX_RATE.

B.4.3 Transmit parallel interface

B.4.3.1 General

Data transfers on the Tx[0:9] bus to the electrical interface are timed by the host system supplied Transmit Byte Clock (TBC). The frequency of the TBC is 106,25 MHz for both 106,25 Mbit/s and 212,5 Mbit/s data transfer rates. Data at the 106,25 MBd signaling rate is timed from the falling edge of TBC. The transmit

Copyright International Organization for Standardization
Provided by IHS under license with ISO
No reproduction or networking permitted without license from IHS Not for Resale

parallel interface timings for the 106,25 MBd rate are shown in figure B.5. For the 106,25 MBd rate, Tx[0:9] set-up and hold time to the falling edge of TBC are each 1,4 ns.

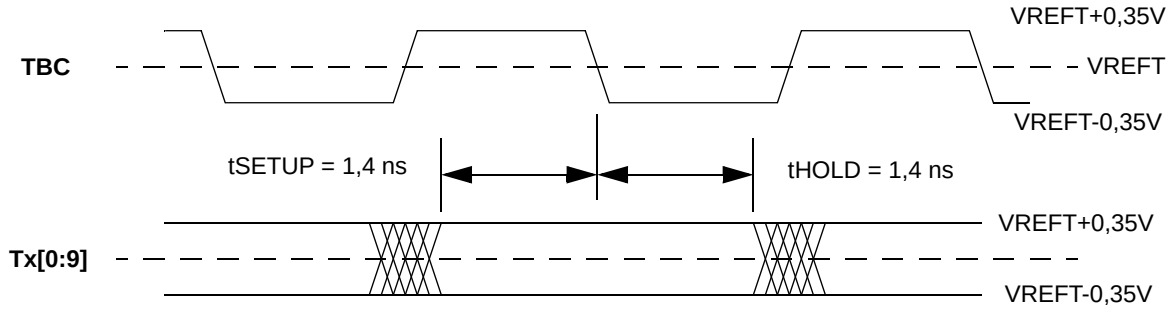

Figure B.5 – Transmit parallel interface timings: 106,25 MBd

Data at the 212,5 MBd rate is timed from both clock edges. This clocking scheme is frequently referred to as double data rate (DDR). At this rate, Tx[0:9] and TBC are nominally driven at the same time. All of these signals attain valid SSTL_2 levels within the transition time limit, tTXCT, of 1,88 ns. All of the signals are have a minimum valid time, tVALID, of 2,82 ns. Timings for the 212,5 MBd rate are shown in figure B.6.

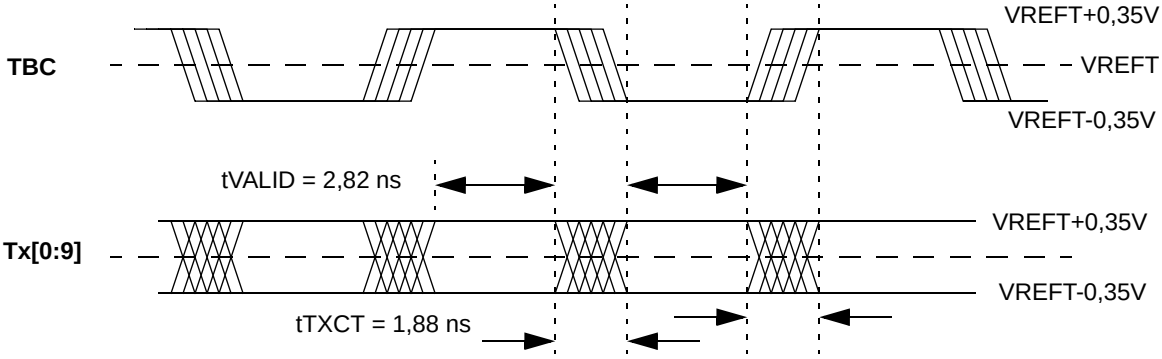

Figure B.6 – Transmit parallel interface timings: 212,5 MBd

B.4.3.2 Tx[0:9]

Tx[0:9] is the 10 bit parallel transmit data presented to the electrical interface for serialization and transmission. The order that bits are transmitted in is Tx[0] first, followed by Tx[1] through Tx[9].

B.4.3.3 TBC

TBC is the transmit byte clock which operates at 106,25 MHz independent of the transmit interface data rate. TBC is used to read data into the electrical interface for transmission. TBC is at the same frequency as REFCLK[0:1] and is never skewed more than one quarter clock cycle from it. The frequency tolerance for TBC is ±0,01 %.

B.4.3.4 TX_RATE

TX_RATE is the speed selector for data transmission for the electrical interface. When TX_RATE is low the interface will transmit data at 1 062,5 Mbit/s. When TX_RATE is high the interface will transmit data at 2 125 Mbit/s.

--`,,```,,,,````-`-`,,`,,`,`,,`---

Copyright International Organization for Standardization
Provided by IHS under license with ISO
No reproduction or networking permitted without license from IHS
Not for Resale

B.4.3.5 VREFT

VREFT is the reference voltage for Tx[0:9], TBC, TX_RATE, RX_RATE, EWRAP and EN_CDET. The electrical interface interprets these signals as logical 1 when their voltages are greater than VREFT. The interface interprets these signals as logical 0 when their values are less than V_{REFT}.

B.4.4 Receive parallel interface

B.4.4.1 General

Data transfers on the Rx[0:9] bus from the electrical interface are timed by the Receive Byte Clock (RBC[0:1]). The frequency of the RBC[0:1] is 53,125 MHz for 106,25 Mbit/s output data rates (for 1 062,5 Mbit/s serial data input) and 106,25 MHz for 212,5 Mbit/srates (for 2 125 Mbit/s serial data rates). For both frequencies, RBC[0] is delayed by one half clock cycle from RBC[1]. Duty cycle for RBC[0:1] is between 40 % and 60 %. Since the data output rate is twice the frequency of the clocks, setup time and hold time specifications are defined relative to the edge that is rising during the valid data period. For the 106,25 Mbit/s Rx[0:9] rate, setup time is 3,0 ns. and hold time is 1,5 ns. For the 212,5 Mbit/s Rx[0:9] rate, setup time is 1,4 ns and hold time is 1,4 ns. These specifications refer to COM_DET as well as to Rx[0:9].

Copyright International Organization for Standardization
Provided by IHS under license with ISO
No reproduction or networking permitted without license from IHS Not for Resale

These timing relationships are illustrated in figure B.7 for the 106,25 Mbit/sRx[0:9] rate and in figure B.8 for the 212,5 Mbit/sRx[0:9] rate.

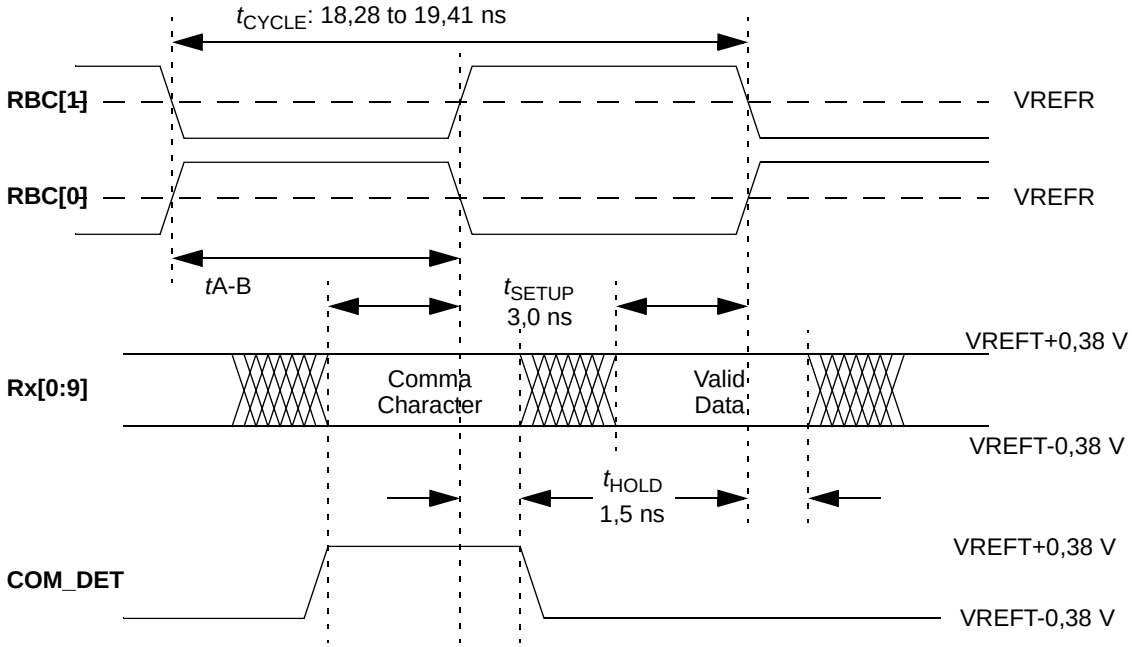

Figure B.7 – Receive parallel interface timings: 106,25 MBd

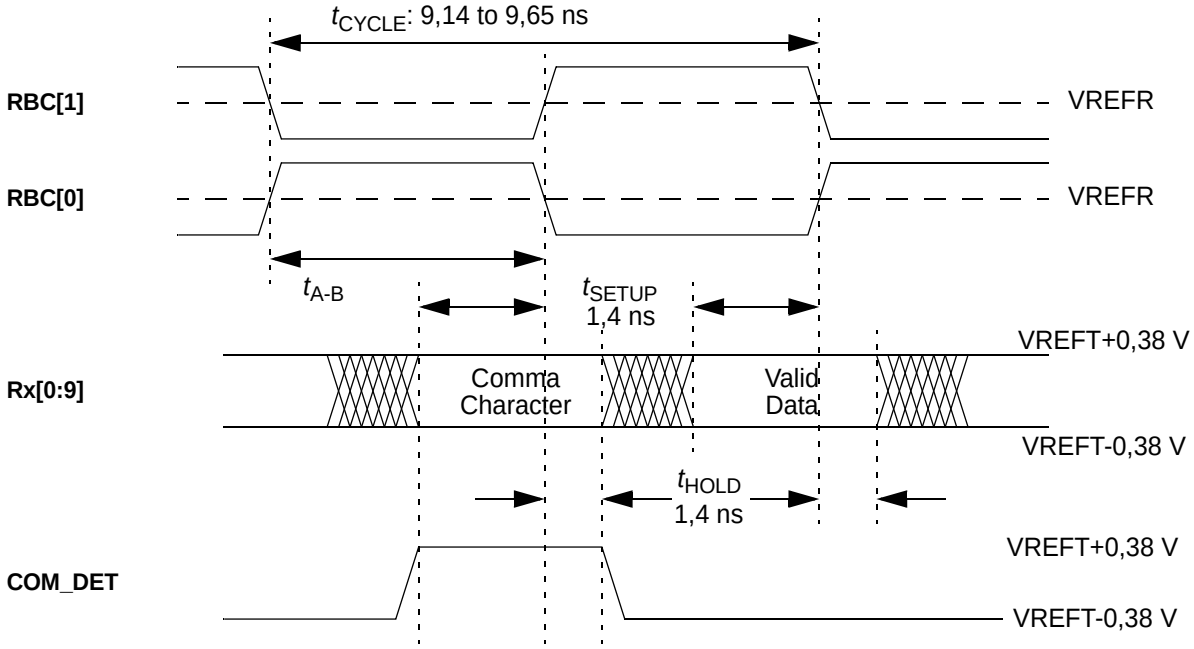

Figure B.8 – Receive parallel interface timings: 212,5 MBd

B.4.4.2 Rx[0:9]

Rx[0:9] is the 10 bit parallel received data, driven by the electrical interface to the host system. The order that bits are received in is Rx[0] first, followed by Rx[1] through Rx[9].

--`,,```,,,,````-`-`,,`,,`,`,,`---

Copyright International Organization for Standardization
Provided by IHS under license with ISO
No reproduction or networking permitted without license from IHS
Not for Resale

B.4.4.3 RBC[0:1]

RBC[0] and RBC[1] are the two receive byte clocks provided by the electrical interface for the host to clock RX[0:9] data. The frequency of each RBC is 53,125 MHz for the 106,25 MBd signaling rate and 106,25 MHz for the 212,5 MBd rate. RBC[0] is exactly one half clock cycle delayed from RBC[1]. During byte or word alignment, RBC[0:1] pulses may be extended beyond their nominal length, but they are not truncated or slivered less than their nominal length.

The $t_{A\text{-}B}$ specification provides the allowed delay range from RBC[0] to RBC[1]. This is 8,9 ns to 9,9 ns for the 106,25 MBd Rx[0:9] signaling rate and 4,5 ns to 4,9 ns for the 212,5 MBd Rx[0:9] signaling rate.

B.4.4.4 COM_DET

COM_DET indicates that the electrical interface has detected a comma sequence and that byte 0 of word 0 associated with the current positive edge of RBC[1] contains a comma character. In order to provide this function, the electrical interface many delete one or more characters if RBC[1] is out of phase with the received comma sequence. This allows RBC[1] to be stretched an additional one byte (byte slip) so that on the next received comma sequence RBC[1] will be in phase.

B.4.4.5 EN_CDET

EN_CDET enables the electrical interface to perform the byte alignment function after receiving the comma sequence. When EN_CDET is asserted (high) the byte alignment function is operational.

B.4.4.6 RX_RATE

RX_RATE is the speed selector for reception by the electrical interface. When RX_RATE is low the interface will receive data at 1 062,5 MBd. When TX_RATE is high the interface will receive data at 2 125 MBd.

B.4.4.7 RX_LOS

RX_LOS is the receiver loss-of-signal indicator. When the amplitude of the incoming high-speed serial data is too low for that data to be considered valid, RX_LOS is set to a logical 1 (high).

B.4.4.8 VREFR

VREFR is the reference voltage for RX[0:9], RBC[0:1], COM_DET and RX_LOS. These signals are interpreted as a logical 1 if their voltage is above VREFR and as a logical 0 if their voltage is below VREFR.

B.5 REFCLK[0:1]

REFCLK[0:1] is the differential 106,25 MHz transmit PLL reference clock for generation of the 1 062,5 MHz or 2 125 MHz bit rate clocks used for serial data transmission. The receive PLL automatically uses REFCLK[0:1] as a reference at power-up or in the absence of an input data stream. The frequency tolerance for this clock shall be ±0,01 %. The active crossing for REFCLK[0] and REFCLK[1] is when REFCLK[1] rises and REFCLK[0] falls. This crossing shall have low jitter.

B.6 Support functions

B.6.1 Acquisition of receiver bit synchronization

The receive interface bit synchronization in this example begins at power-up of the interface once the REFCLK input has stabilized. At that point the receive PLL acquires lock to the REFCLK frequency within 500 μs. Once a valid input signal is received, the receive PLL will lock to that signal within 2 500 bits.

Copyright International Organization for Standardization
Provided by IHS under license with ISO
No reproduction or networking permitted without license from IHS Not for Resale

Should synchronization be lost while the PLL is operating near to the input data frequency, the clock recovery will take less than 2 500 bits to reacquire synchronization. This may occur as a result of a phase jump in the incoming data or activation of the loopback function.

This bit synchronization activity results in establishing the frequency and timing of ±Recovered_Clock which in turn drives the deserializer and hence the RBC[0:1]. In the event that the incoming signal is lost the frequency of ±Recovered_Clock and RBC[0:1] are limited to be within the range of 103,06 MHz to 109,44 MHz.

B.6.2 Receive byte alignment

The electrical interface contains circuitry to provide character alignment. The circuitry will cause the output to be aligned on any occurrence of an alignment pattern in the incoming bit stream.

When alignment occurs the pattern which triggered the alignment, and all subsequent data, will be presented in uncorrupted form on the Rx[0:9] lines. Pulses on the receive byte clocks, RBC[0:1], may be extended, but are not truncated or slivered.

The occurrence of a character alignment is signaled by a pulse on the COM_DET line. Refer to B.4.4 for the details of COM_DET timing. This line signals the host system that the presented character is the first character of an ordered set as defined by FC-FS and that the previous clocks may have been extended.

The alignment is enabled by holding the EN_CDET input high. This allows the character alignment to be disabled for test purposes.

B.6.3 Loopback function

When the EWRAP input is a logic 1, the loopback function is enabled. In this operating mode the serial data stream from the transmitter is routed to the input of the data recovery block. After the time required for bit and character synchronizations this data will be available on the receive data output lines. During loopback the operation of the communications media is not defined. The loopback function is defined at the FC-FS rather than the FC-PI level.

Copyright International Organization for Standardization
Provided by IHS under license with ISO
No reproduction or networking permitted without license from IHS Not for Resale

Annex C
(normative)

Optical cable plant usage

The worst-case power budget and link penalties for the multimode cables specified in 6.4 are shown in table C.1. In some cases, it will be desirable to use an alternative multimode cable plant to those described in 6.4. This may be due to the need for operation in locations where alternative lower bandwidth cables are presently installed or new installations where higher bandwidth cables have been installed. These fibre types have not been studied (see note 2 below), nor is their use provided in the main body of this document. Their cable plant usage is described in tables C.2 and C.3.

Table C.1 – Worst case (nominal bandwidth) multimode cable link power budget

Parameter	Unit	50 μm MMF			62,5 μm MMF			NOTE
Modal bandwidth	MHz•km	500			200			1
Data rate	MB/s	100	200	400	100	200	400	
Operating distance	m	0,5 to 500	0,5 to 300	0,5 to 150	0,5 to 300	0,5 to 150	0,5 to 70	
Link power budget	dB	7	6	6	7	6	6	
Intersymbol interference	dB	1,85	2,26	2,71	3,14	3,09	3,21	
Additional link penalties	dB	1,27	0,96	1,03	0,86	0,71	0,78	6
Channel insertion loss	dB	3,85	2,62	2,06	3,00	2,10	1,78	
Unallocated link margin	dB	0,03	0,16	0,20	0,00	0,10	0,23	7

Table C.2 – Alternate (lower bandwidth) multimode cable link power budget

Parameter	Unit	50 μm MMF			62,5 μm MMF			NOTE
Modal bandwidth	MHz•km	400			160			1
Data rate	MB/s	100	200	400	100	200	400	
Operating distance	m	0,5 to 450	0,5 to 260	0,5 to 130	0,5 to 250	0,5 to 120	0,5 to 55	3
Stressed receiver sensitivity	mW	0,058	0,100	0,141	0,071	0,112	0,150	3, 5
Stressed receiver vertical eye closure penalty	dB	1,2	1,58	2,02	2,38	2,13	2,14	
Link power budget	dB	7	6	6	7	6	6	
Intersymbol interference	dB	2,11	2,51	2,97	3,33	3,08	3,12	
Additional link penalties	dB	1,18	0,91	0,98	0,87	0,70	0,78	6
Channel insertion loss	dB	3,61	2,47	1,99	2,76	1,98	1,72	
Unallocated link margin	dB	0,10	0,11	0,06	0,04	0,24	0,38	7

--`,,```,,,,````-`-`,,`,,`,`,,`---

Copyright International Organization for Standardization
Provided by IHS under license with ISO
No reproduction or networking permitted without license from IHS Not for Resale

Table C.3 – Alternate (higher bandwidth) multimode cable link power budget

Parameter	Unit	50μm MMF			NOTE
Modal Bandwidth	MHz•km	2 000			1, 2
Data rate	MB/s	100	200	400	
Operating distance	m	0,5 to 860	0,5 to 500	0,5 to 270	3, 8
Wavelength	nm	840 to 860	840 to 860	840 to 860	3
RMS spectral width	nm	0,85	0,85	0,85	4
Stressed receiver sensitivity	mW	0,047	0,083	0,126	3, 5
Stressed receiver vertical eye closure penalty	dB	0,24	0,33	0,75	
Link power budget	dB	7	6	6	
Intersymbol interference	dB	1,00	1,14	1,66	
Additional link penalties	dB	1,36	1,51	1,83	6
Channel insertion loss	dB	4,62	3,31	2,48	
Unallocated link margin	dB	0,02	0,04	0,03	7

NOTE 1 Modal bandwidth at 850 nm.

NOTE 2 In order to achieve this bandwidth certain launch conditions are required. This bandwidth is currently under study in other Standards bodies. Their future standardization may affect distance and link penalties, specified in this table; or other requirements.

NOTE 3 See 6.4. for other specifications.

NOTE 4 The reduction in the spectral width specifications reflects the capability of sources which meet the reduced centre wavelength range.

NOTE 5 ptical modulation amplitude values are peak-to-peak. See annex A.6

NOTE 6 Link penalties are used for link budget calculations. They are not requirements and are not meant to be tested. The link penalties were calculated using the methodologies in IEC 61282-2.

NOTE 7 The unallocated link margin may be combined with the channel insertion loss to meet the measured channel insertion loss but not to increase the operating distance.

NOTE 8 It is expected that the operating distance for 400 MB/s will increase to at least 300 m with improvements in transmitter or relaxation of laser safety standards.

Copyright International Organization for Standardization
Provided by IHS under license with ISO
No reproduction or networking permitted without license from IHS Not for Resale

Annex D
(normative)

Tx-Off and Rx-Loss of Signal detection

D.1 General

This annex extends the optical and electrical interface specifications of clause 6 and clause 9 in the areas of transmitter-off behavior and the (optional) receiver loss-of-signal function. It gives the background, scope and qualitative and quantitative requirements for Tx-off and Rx-LOS in FC physical interfaces.

D.2 Background

There are cases where a Fibre Channel device is connected to another device whose transmitter is not operational or is connected to a transmission medium with nothing on the far end. In these cases, the first device shall not react as if a normal TxRx Connection existed. For example, an arbitrated-loop hub shall keep those ports bypassed.

The most problematic case is that of a normal-strength encoded signal from a remote device which is not responding to its serial input, for example during its power-on selftest. That case is prohibited by FC-AL-2, which requires that a port's transmitter shall be disabled when the port cannot participate in normal protocols.

FC-PI gives the name Tx-Off to the state of a disabled optical or electrical transmitter and specifies the maximum signal amplitude that may be launched into the transmission medium. The Tx-Off requirement exists to enable or facilitate, an attached FC device to reject the link.

Tx-Off by itself is not a universally sufficient solution, because of the extreme sensitivity of typical receivers. An optical receiver, even with no light, generates noise voltage in which a de-serializer will detect commas, K28.5's and even LIPs with predictable frequency. Erroneous "detection" of a valid pattern is even more likely with an electrical receiver, given near-end crosstalk from the local transmitter (NEXT) and pattern-rate deterministic noise voltage from a remote transmitter that is "Off".

Fortunately, it is generally practical to make a receiver with an amplitude-sensitive signal detect function, known in FC-PI by the complementary name Rx-LOS (Receiver Loss of Signal). In order to be useful, this shall reliably discriminate between the smallest valid input signal and the largest invalid input signal.

D.3 Scope

The Rx-LOS function is optional in FC-PI. Many FC devices don't need it. This group includes some devices with only one port, whose behavior is "don't care" when standing alone. It also includes devices which can do without it, because they conduct an elaborate and hard-to-fool exchange with the remote device. But many Fibre Channel devices do require a robust Rx-LOS function. They include autonomous port-bypass circuits, for example hub ports whose relatively simple valid-pattern tests can be fooled by crosstalk and Tx-Off leakage waveforms.

The Tx-Off functional requirement is mandatory for all ports supporting FC-AL-2 and any other FC device that could disrupt a system by transmitting without properly responding to the received signal.

Likewise, the Tx-Off amplitude limits given in FC-PI are mandatory for all FC-AL-2 ports and other devices that are expected to work with Rx-LOS ports.

Interoperable Rx-LOS implementations require generally accepted bounds on the signal detect threshold. The lower bound depends on the maximum Tx-Off level. In addition, for electrical links, it depends on the local transmitter output and the NEXT ratio of the attached cable plant. Unfortunately, NEXT limits and methods of measurement are outside the scope of this FC-PI release. Therefore, Rx-LOS detection thresholds shall be given as expressions in which NEXT is a variable.

Copyright International Organization for Standardization
Provided by IHS under license with ISO
No reproduction or networking permitted without license from IHS Not for Resale

D.4 Functional and timing specifications

D.4.1 General

Component specifications are outside the scope of FC-PI. The requirements given here apply to the transmission media interface and an (implied) service interface between the FC-PI and FC-FS layers.

D.4.2 Tx_Off

The Tx_Off (disabled) state is mandatory in some kinds of FC ports and optional in others. The mandatory group includes, among others, all ports supporting FC-AL-2. Where implemented, Tx_Off control timing shall meet the requirements in the following table.

Table E.1 – Tx-Off timing

Turn-off time	t_off	max. 10 µs	Assertion of Disable to fall of output amplitude below the specified maximum Tx-Off level. During this period, the TxRx Connection BER and the far end Rx-LOS response are unspecified.
Turn-on time	t_on	max. 1 ms	Negation of Disable to rise of output amplitude above the specified minimum valid level in the link budget. During this period, the TxRx Connection BER and the far end Rx-LOS response are unspecified.

D.4.3 Rx_LOS

The receiver of an FC device may implement an Rx_LOS function, which continuously generates an Rx_LOS signal in response to the amplitude of the incoming serial data. Rx_LOS is intended to indicate the absence of a deliberate input signal.

Assertion of Rx_LOS shall imply that the amplitude of incoming serial data is less than the minimum level allowed by the link budget. This typically indicates a disconnected or broken cable or a transmitter at the far end that is disabled, broken or powered off. The converse is not necessarily true. A poor quality link may provide enough signal for Rx_LOS to remain negated, even though the signal level is noncompliant and the BER objective is not met.

Rx_LOS shall not depend on or imply anything about, the input data format or encoding.

Rx_LOS may squelch the received serial and/or parallel data stream.

Rx_LOS response time shall comply with the following table.

Table E.2 – Rx-LOS timing

Assert delay	t_los_on	max. 100 µs	From fall of input signal below LOS detection threshold. The TxRx Connection may become noncompliant before that threshold is reached.
Negate delay	t_los_off	max. 100 µs	From rise of input signal above LOS detection threshold. The TxRx Connection may remain noncompliant after that threshold is reached.

The signal detection circuitry shall be designed such that the Rx_LOS output does not rapidly change state with small variations in received power. Hysteresis and time averaging are two possible approaches to this requirement.

D.5 Optical Tx_Off and Rx_LOS Signal Levels

The launched power from an optical transmitter in the Tx_Off state shall not exceed -35 dBm (average). This limit applies to both shortwave and longwave, for all speed variants in FC-PI.

Copyright International Organization for Standardization
Provided by IHS under license with ISO
No reproduction or networking permitted without license from IHS Not for Resale

The value of Rx_LOS, where implemented, shall be generated according to the following table:

Table E.3 – Optical Rx_LOS detection thresholds

Receive conditions	Rx-LOS value
Input_optical_power < -31 dBm (ave)	Asserted
Input_optical_power > specified receiver sensitivity and Modulation parameters comply with FC-PI limits	Negated
All other conditions	Unspecified

This standard is designed to permit various detector implementations, including those responding to average optical power as well as those responding to the 8b/10b modulation amplitude.

D.6 Electrical Tx_Off Signal Levels

The output voltage of an electrical transmitter in the Off state shall not exceed the value specified in table 20.

The Tx_Off voltage limit applies to the γ-T compliance point and is not defined for any other compliance point. It includes the worst-case effect of any crosstalk within the FC device from the adjacent receiver path. For compliance testing, Tx_Off voltage should be measured while a maximum strength, minimum risetime 8b/10b signal is applied to the γ-R point of the same port.

D.7 Electrical Rx_LOS Signal Levels

The value of Rx_LOS, where implemented, shall be generated according to the following table:

Table E.4 – Electrical Rx_LOS detection thresholds

Receive conditions	Rx-LOS value
V_{input}(receiver) < Rx_LOS threshold (see below)	Asserted
V_{input}(receiver) > minimum differential sensitivity	Negated
All other conditions	Unspecified

The actual threshold of each receiver, below which Rx_LOS is asserted, shall be no less than the sum of:

- maximum voltage coming from a remote transmitter in the Tx_Off state,
- maximum NEXT voltage. This is the product of the local transmitter output voltage and the maximum tolerable NEXT ratio of the cable plant, which may be a function of the local transmitter risetime. This standard does not presently set limits on cable plant NEXT ratios,
- Maximum voltage at the receiver input from other local sources of noise. This includes NEXT sources between the α and γ points.

D.8 (informative) Methods of measurement for electrical Rx_LOS thresholds

The stated bounds on Rx_LOS thresholds imply a significant trade-off between process margins and NEXT tolerance. For example, a relatively demanding NEXT bound of 3 % would limit the total non-deliberate input voltage to less than 150 mV. The Rx_LOS threshold could vary from that level to almost 400 mV, a ratio of 2,7:1. To support a more conservative NEXT allowance of 7 %, while the local transmitter is allowed to drive 2 000 mV and the remote transmitter 70 mV, the minimum Rx_LOS threshold is around 220 mV, allowing no more than 1,8:1 process variation.

In some cases, circuit design can control the effective Rx_LOS threshold voltage to tighter tolerances. But another, more broadly applicable approach promises to increase the margins substantially. The key is to

Copyright International Organization for Standardization
Provided by IHS under license with ISO
No reproduction or networking permitted without license from IHS Not for Resale

measure and add up worst-case noise voltage in a way that is not so conservative with respect to the measurement of worst-case signal voltages. This issue is under investigation and quantitative details may be added in a future amendment or technical report.

The proposed experiment is to compare the thresholds of typical Rx-LOS circuits, measured with two different stimulus waveforms (each variably attenuated). In one case the input is a normal NRZ data signal, calibrated by scope measurement of its vertical eye opening. In the other case the input is a “spiky” NEXT and/or Tx-Off waveform, calibrated by scope measurement of peak-to-peak voltage. We expect that Rx-LOS threshold values measured with noise waveforms will be significantly higher than those measured with data eyes. This would give system designers more margin in the trade-off between Rx-LOS threshold control and NEXT tolerance.

There is another argument saying that the upper bound on Rx-LOS threshold is not unreasonably tight with respect to the lower. Data signals are measured by vertical eye opening, but LOS circuits look at the rectified average or peak voltage. When noise is added to a data waveform it closes the eye, but always increases the peak and the rectified average voltage. So in a system designed to tolerate a finite amount of noise (NEXT etc.), with minimum input the peak voltage will significantly exceed the vertical eye. One likely conclusion is that it is unlikely that practical limits on NEXT will be driven by the need for manufacturable Rx-LOS detectors. The critical constraint is the effect of NEXT on eye closure and link budget.

Copyright International Organization for Standardization
Provided by IHS under license with ISO
No reproduction or networking permitted without license from IHS Not for Resale

Bibliography

ISO/IEC 14165-114, *Information technology - Fibre Channel - Part 114: 100 MB/s Balaced copper physical interface (FC-100-DF-EL-S)*

ISO/IEC 14165-116, *Information technology - Fibre Channel - Part 116: 10 Gigabit Fibre (10GFC)*

ISO/IEC TR 14165-117 (under consideration), *Information technology - Fibre Channel - Part 117: Methodologies for Jitter and Signal Quality Specification - MJSQ*

ISO/IEC 14165-122, *Information technology - Fibre Channel - Part 122: Arbitrated Loop-2 (FC-AL-2)*

ISO/IEC 14165-131, *Information technology - Fibre Channel - Part 131: Switch Fabric Requirements (FC-SW)*

ISO/IEC 14165-133 (under development), *Information technology - Fibre Channel - Part 133 - Switch Fabric-3 (FC-SW-3)*

ISO/IEC 14165-141, *Information technology - Fibre Channel - Part 141: Switch Generic Requirements (FC-FG)*

ISO/IEC 14165-211, *Information technology - Fibre Channel – Part 211: Mapping to HIPPI-FP (FC-FP)*

ISO/IEC 14165-222*, Information technology - Fibre Channel – Part 222: Single-Byte Command Sets-2 Mapping Protocol (FC-SB-2)*

ISO/IEC 14165-241, *Information technology - Fibre Channel - Part 241: Back Bone 2 (FC-BB-2)*

ISO/IEC 14165-251, *Information technology - Fibre Channel - Part 251: Framing and signaling (FC-FS)*

ISO/IEC 14165-321 (under development), *Information technology - Fibre Channel - Part 321: Audio-Video*

ISO/IEC 14165-331 (under development), *Information technology - Fibre Channel - Part 331: Virtual Interface (FC-VI)*

ISO/IEC 14165-414 (under development), *Information technology - Fibre Channel - Part 414: - Fibre Channel - Part 414: Generic Services-4 (FC-GS-4)*

IEC 60793-1-40*, Optical fibres - Part 1-40: Measurement methods and test procedures - Attenuation*

IEC 60793-1-42*, Optical fibres - Part 1-42: Measurement methods and test procedures - Chromatic dispersion*

IEC 60807-3*, Rectangular connectors for frequencies below 3 MHz - Part 3: Detail specification for a range of connectors with trapezoidal shaped metal shells and round contacts - Removable crimp contact types with closed crimp barrels, rear insertion/rear extraction*

IEC 60825-2*, Safety of laser products - Part 2: Safety of optical fibre communication systems*

IEC 61076-3-103, *Connectors for electronic equipment - Part 3-103: Rectangular connectors - Detail specification for single row connectors with non-removable ribbon cable contacts on 1,25 mm pitch used for high speed serial data (HSSDC) [also SFF 8420]*

IEC 61280-2-1, *Fibre optic communication subsystem basic test procedures - Part 2-1: Test procedures for digital systems - Receiver sensitivity and overload measurement*

IEC 61280-4-2, *Fibre optic communication subsystem basic test procedures - Part 4-2: Fibre optic cable plant - Single-mode fibre optic cable plant attenuation*

IEC 61282-2, *Fibre optic communication system design guides - Part 2: Multimode and single-mode Gbit/s applications - Gigabit ethernet model*

IEC 61300-2-25, Fibre optic interconnecting devices and passive components - Basic test and measurement procedures - Part 2-2: Tests - Mating durability

IEC 61300-2-4, Fibre optic interconnecting devices and passive components - Basic test and measurement procedures - Part 2-4: Tests - Fibre/cable retention

--`,,```,,,,````-`-`,,`,,`,`,,`---

Copyright International Organization for Standardization
Provided by IHS under license with ISO
No reproduction or networking permitted without license from IHS Not for Resale

IEC 61300-2-6, Fibre optic interconnecting devices and passive components - Basic test and measurement procedures - Part 2-6: Tests - Tensile strength of coupling mechanism

IEC 61300-3-4, Fibre optic interconnecting devices and passive components - Basic test and measurement procedures - Part 3-4: Examinations and measurements - Attenuation

IEC 61754-1, Fibre optic connector interfaces - Part 1: General and guidance

SFF-8045 - 40-pin SCA-2 Connector with Parallel Selection

SFF-8410 - Testing and performance requirements for high speed serial and parallel - serial copper links

SFF-8412 - High speed serial testing and performance requirements for passive duplex optical connections (under development)

SFF-8420 - Specification for HSSDC-1 shielded connections

SFF-8451 - Specification for SCA-2 Unshielded Connections

EIA/TIA-403, Precision Coaxial Connectors for CATV Applications (75 Ohm)

EIA/TIA-440-A, Fibre Optic Connector Terminology, January 1989.

Gigabit Ethernet Networking - Mcmillan Technical Publication, ISBN 1-7870-062-0 chapter 9, the gigabit ethernet to optical link model

SSTL_2 specification: available through the JEDEC web page at
http://www.jedec.org/??

Copyright International Organization for Standardization
Provided by IHS under license with ISO
No reproduction or networking permitted without license from IHS Not for Resale

Copyright International Organization for Standardization
Provided by IHS under license with ISO
No reproduction or networking permitted without license from IHS
Not for Resale

Copyright International Organization for Standardization
Provided by IHS under license with ISO
No reproduction or networking permitted without license from IHS
Not for Resale

ISBN 2-8318-8521-3



ICS 35.200

Typeset and printed by the IEC Central Office
GENEVA, SWITZERLAND

Copyright International Organization for Standardization
Provided by IHS under license with ISO
No reproduction or networking permitted without license from IHS

Not for Resale