INTERNATIONAL STANDARD

# ISO/IEC 13481

First edition
1993-12-15

# Information technology — Data interchange on 130 mm optical disk cartridges — Capacity: 1 gigabyte per cartridge

*Technologies de l'information — Échange de données sur cartouches de disque optique de diamètre* 130 mm *— Capacité: 1 gigabyte par cartouche*




Reference number
ISO/IEC 13481:1993(E)

Copyright International Organization for Standardization
Provided by IHS under license with ISO
No reproduction or networking permitted without license from IHS

Not for Resale

## Contents


| | | Page |
|---|---|---|
| **Section 1 - General** | | **1** |
| **1** | Scope | **1** |
| **2** | Conformance | **1** |
| **2.1** | Optical Disk Cartridges | **1** |
| **2.2** | Generating System | **1** |
| **2.3** | Receiving System | **1** |
| **3** | Normative references | **2** |
| **4** | Definitions | **2** |
| **4.1** | case | **2** |
| **4.2** | Cyclic Redundancy Check (CRC) | **2** |
| **4.3** | embossed mark | **2** |
| **4.4** | entrance surface | **2** |
| **4.5** | Error Correction Code (ECC) | **2** |
| **4.6** | field | **2** |
| **4.7** | format | **2** |
| **4.8** | groove | **2** |
| **4.9** | interleaving | **2** |
| **4.10** | Kerr rotation | **2** |
| **4.11** | land and groove | **2** |
| **4.12** | mark | **2** |
| **4.13** | optical disk | **2** |
| **4.14** | optical disk cartridge (ODC) | **2** |
| **4.15** | polarization | **2** |
| **4.16** | recording layer | **2** |


© ISO/IEC 1993
All rights reserved. No part of this publication may be reproduced or utilized in any form or by any means, electronic or mechanical, including photocopying and microfilm, without permission in writing from the publisher
ISO/IEC Copyright Office * Case Postale 56 * CH-1211 Genève 20 * Switzerland
Printed in Switzerland

Copyright International Organization for Standardization
Provided by IHS under license with ISO
No reproduction or networking permitted without license from IHS
Not for Resale

| | | |
|---|---|---|
| 4.17 | Reed-Solomon code | 2 |
| 4.18 | rewritable optical disk | 2 |
| 4.19 | sector | 2 |
| 4.20 | substrate | 2 |
| 4.21 | track | 3 |
| 4.22 | write-once functionality | 3 |
| 4.23 | zone | 3 |
| 5 | Conventions and notations | 3 |
| 5.1 | Representation of numbers | 3 |
| 5.2 | Names | 3 |
| 6 | List of acronyms | 3 |
| 7 | General description of the optical disk cartridge | 4 |
| 8 | General requirements | 4 |
| 8.1 | Environments | 4 |
| 8.1.1 | Testing environment | 4 |
| 8.1.2 | Operating environment | 4 |
| 8.1.3 | Storage environment | 5 |
| 8.1.4 | Transportation | 5 |
| 8.2 | Temperature shock | 5 |
| 8.3 | Safety requirements | 5 |
| 8.4 | Flammability | 5 |
| 9 | Reference drive | 5 |
| 9.1 | Optical system | 5 |
| 9.2 | Optical beam | 7 |
| 9.3 | Read channels | 7 |
| 9.4 | Tracking | 7 |
| 9.5 | Rotation of the disk | 7 |
| **Section 2 - Mechanical and physical characteristics** | | 8 |
| 10 | Dimensions and mechanical characteristics of the case | 8 |
| 10.1 | General | 8 |
| 10.2 | Case drawings | 8 |
| 10.3 | Sides, reference axes and reference planes | 8 |
| 10.3.1 | Relationship of Sides A and B | 8 |
| 10.3.2 | Reference axes and case reference planes | 8 |




Copyright International Organization for Standardization
Provided by IHS under license with ISO
No reproduction or networking permitted without license from IHS
Not for Resale

| | | |
|---|---|---|
| 10.4 | Materials | 8 |
| 10.5 | Mass | 9 |
| 10.6 | Overall dimensions | 9 |
| 10.7 | Location hole | 9 |
| 10.8 | Alignment hole | 10 |
| 10.9 | Surfaces on reference planes P | 10 |
| 10.10 | Insertion slots and detent features | 11 |
| 10.11 | Gripper slots | 11 |
| 10.12 | Write-inhibit holes | 12 |
| 10.13 | Media sensor holes | 12 |
| 10.14 | Head and motor window | 13 |
| 10.15 | Shutter | 13 |
| 10.16 | Slot for shutter opener | 13 |
| 10.17 | Shutter sensor notch | 14 |
| 10.18 | User label areas | 14 |
| 11 | Dimensional and physical characteristics of the disk | 15 |
| 11.1 | Dimensions of the disk | 15 |
| 11.1.1 | Outer diameter | 15 |
| 11.1.2 | Thickness | 15 |
| 11.1.3 | Clamping zone | 15 |
| 11.1.4 | Clearance zone | 15 |
| 11.2 | Mass | 15 |
| 11.3 | Moment of inertia | 15 |
| 11.4 | Imbalance | 15 |
| 11.5 | Axial deflection | 15 |
| 11.6 | Axial acceleration | 15 |
| 11.7 | Dynamic radial runout | 15 |
| 11.8 | Radial acceleration | 16 |
| 11.9 | Tilt | 16 |
| 12 | Drop test | 16 |
| 13 | Interface between disk and drive | 16 |
| 13.1 | Clamping technique | 16 |
| 13.2 | Dimensions of the hub | 16 |
| 13.2.1 | Outer diameter of the hub | 16 |
| 13.2.2 | Height of the hub | 16 |
| 13.2.3 | Diameter of the centre hole | 16 |
| 13.2.4 | Height of the top of the centre hole at diameter $D_9$ | 16 |




Copyright International Organization for Standardization
Provided by IHS under license with ISO
No reproduction or networking permitted without license from IHS
Not for Resale

13.2.5 Centring length at diameter $D_9$ 16
13.2.6 Chamfer at diameter $D_9$ 17
13.2.7 Chamfer at diameter $D_8$ 17
13.2.8 Outer diameter of the magnetizable ring 17
13.2.9 Inner diameter of the magnetizable ring 17
13.2.10 Thickness of the magnetizable material 17
13.2.11 Position of the top of the magnetizable ring relative to the disk reference plane 17

13.3 Magnetizable material 17
13.4 Clamping force 17
13.5 Capture cylinder for the hub 17
13.6 Disk position in the operating condition 18

14 Characteristics of the substrate 33

14.1 Index of refraction 33
14.2 Thickness 33

**Section 3 - Format of information** 33

15 Track geometry 33

15.1 Track shape 33
15.2 Direction of rotation 33
15.3 Track pitch 33
15.4 Track number 33

16 Track format 33

16.1 Formatted Zone 33
16.2 Control tracks 36
16.3 Control Track PEP Zone 37

16.3.1 Recording in the PEP Zone 37
16.3.2 Cross-track loss 37
16.3.3 Format of the tracks of the PEP Zone 38

16.4 Control Track SFP Zones 41

16.4.1 Duplicate of the PEP information 41

16.5 Media information 42
16.6 System Information 48
16.7 Unspecified content 49
16.8 Requirements for interchange of a user-recorded cartridge 49



Copyright International Organization for Standardization
Provided by IHS under license with ISO
No reproduction or networking permitted without license from IHS
Not for Resale

16.8.1 Requirements for reading 49
16.8.2 Requirements for writing and erasing 49

17 Sector format 49

17.1 Sector Mark (SM) 51
17.2 VFO areas 52
17.3 Address Mark (AM) 52
17.4 ID and CRC 52
17.5 Postamble (PA) 53
17.6 Offset Detection Flag (ODF) 53
17.7 Gap 53
17.8 Flag 53
17.9 Auto Laser Power Control (ALPC) 53
17.10 Sync 53
17.11 Data field 53

17.11.1 User bytes 53
17.11.2 CRC and ECC 53
17.11.3 Bytes for control information 54
17.11.4 Last bytes of the Data field of the 512-byte sector format 54
17.11.5 Resync 54

17.12 Buffer 54

18 Recording code 54
19 Defect management 54

19.1 Media initialization 55

19.1.1 Media initialization with certification 55
19.1.2 Media initialization without certification 55

19.2 Write and read procedure 55
19.3 Layout of the User Zone 56

19.3.1 Disk Definition Structure (DDS) 57
19.3.2 Primary Defect List (PDL) 58
19.3.3 Secondary Defect List (SDL) 59
19.3.4 Zone Structure Table (ZST) 60

Section 4 - Characteristics of embossed information 62

20 ZCAV format 62



Copyright International Organization for Standardization
Provided by IHS under license with ISO
No reproduction or networking permitted without license from IHS
Not for Resale

**20.1** Tracking 62
**20.2** Characteristics of pre-recorded information 62

**20.2.1** Groove-related signals 62
**20.2.2** Properties of pre-recorded marks 63
**20.2.3** Parameters of the read characteristics 64

**Section 5 - Characteristics of the recording layer** 65

**21** Characteristics of the recording layer 65

**21.1** Test conditions 65

**21.1.1** General 65
**21.1.2** Read conditions 65
**21.1.3** Write conditions 65
**21.1.4** Erase conditions 66

**21.2** Baseline reflectance 67

**21.2.1** General 67
**21.2.2** Actual value 67
**21.2.3** Requirement 67

**21.3** Magneto-optical recording in the User Zone 67

**21.3.1** Resolution 67
**21.3.2** Imbalance of magneto-optical signal 68
**21.3.3** Figure of merit for magneto-optical signal 68
**21.3.4** Narrow-band signal-to-noise ratio 68
**21.3.5** Cross-talk ratio 69
**21.3.6** Ease of erasure 69

**Annexes**

**A** - Definition of write and erase pulse width 70
**B** - Measurement of figure of merit 71
**C** - Values to be implemented in future standards 72
**D** - Pointer fields 73
**E** - CRC for ID fields 74
**F** - Interleave, CRC, ECC, Resync for the Data field 75
**G** - Sector retirement guidelines 81
**H** - Office environment 82
**J** - Transportation 83




Copyright International Organization for Standardization
Provided by IHS under license with ISO
No reproduction or networking permitted without license from IHS
Not for Resale

**K - Requirements for interchange** **84**

**L - SCSI Logical Block to Physical Sector Mapping** **86**

**M - Derivation of the operating climatic environment** **89**

**N - Air cleanliness class 100 000** **93**

**P - Guidelines for using ODCs of Type W/O** **95**



--`,,```,,,,````-`-`,,`,,`,`,,`---

Copyright International Organization for Standardization
Provided by IHS under license with ISO
No reproduction or networking permitted without license from IHS

Not for Resale

## Foreword

ISO (the International Organization for Standardization) and IEC (the International Electrotechnical Commission) form the specialized system for worldwide standardization. National bodies that are members of ISO or IEC participate in the development of International Standards through technical committees established by the respective organization to deal with particular fields of technical activity. ISO and IEC technical committees collaborate in fields of mutual interest. Other international organizations, governmental and non-governmental, in liaison with ISO and IEC, also take part in the work.

In the field of information technology, ISO and IEC have established a joint technical committee ISO/IEC JTC 1. Draft International Standards adopted by the joint technical committee are circulated to national bodies for voting. Publication as an International Standard requires approval by at least 75 % of the national bodies casting a vote.

International Standard ISO/IEC 13481 was prepared by the European Computer Manufacturers Association (as Standard ECMA-183) and was adopted, under a special "fast-track procedure", by Joint Technical Committee ISO/IEC JTC 1, *Information technology,* in parallel with its approval by national bodies of ISO and IEC.

Annexes A, B, D, E, F, K, L and N form an integral part of this International Standard. Annexes C, G, H, J, M and P are for information only.

## Patents

During the preparation of the ECMA standard, information was gathered on patents upon which application of the standard might depend. Relevant patents were identified as belonging to the MAXOPTIX Corporation. However, neither ECMA nor ISO/IEC can give authoritative or comprehensive information about evidence, validity or scope of patent and like rights. The patent holders have stated that licences will be granted under reasonable and non-discriminatory terms. Communications on this subject should be addressed to

MAXOPTIX CORPORATION
2520 Junction Avenue
SAN JOSE – CA 95 134
USA



Copyright International Organization for Standardization
Provided by IHS under license with ISO
No reproduction or networking permitted without license from IHS
Not for Resale

## Introduction

This International Standard specifies the characteristics of 130 mm Optical Disk Cartridges (ODC) with a capacity of 1 Gbyte per cartridge. This International Standard specifies two related but different implementations of such cartridges, viz.

**Type R/W** Provides for data to be written, read, and erased many times over the whole of both recording surfaces of the disk using the thermo-magnetic and magneto-optical effects.

**Type WO** Provides write once, read multiple functionality on the whole of both disk surfaces using the thermo-magnetic and magneto-optical effects.



Copyright International Organization for Standardization
Provided by IHS under license with ISO
No reproduction or networking permitted without license from IHS
Not for Resale

# Information technology - Data interchange on 130 mm optical disk cartridges - Capacity: 1 gigabyte per cartridge

## Section 1 - General

### 1 Scope

This International Standard specifies the characteristics of 130 mm optical disk cartridges (ODCs) with a capacity of 1 Gigabyte per cartridge. It specifies two related, but different implementations of such cartridges:

**Type R/W** Provides for data to be written, read and erased many times over the whole of both recording surfaces of the disk using the thermo-magnetic and magneto-optical effects.

**Type WO** Provides write once, read multiple functionality on both disk surfaces using the thermo-magnetic and magneto-optical effects.

This International Standard specifies:

- the conditions for conformance testing and the reference drive;
- the environments in which the cartridges are to be operated and stored;
- the mechanical, physical and dimensional characteristics of the case and of the cartridge, so as to provide mechanical interchangeability between data processing systems;
- the format of the information on the disk, both embossed and user-written, including the physical disposition of the tracks and sectors, the error correction codes, and the modulation method used;
- the characteristics of the embossed information on the disk;
- the magneto-optical characteristics of the disk, enabling processing systems to write data onto the disk;
- the minimum quality of user-written data on the disk, enabling data processing systems to read data from the disk.

It also provides for interchange between optical disk drives. Together with a standard for volume and file structure, it provides for full data interchange between data processing systems. Interchange involves the ability to write, read and erase data without introducing any error.

### 2 Conformance

#### 2.1 Optical disk cartridges

An ODC claiming conformance with this International Standard shall specify its Type. It shall conform to this International Standard if it meets all mandatory requirements specified herein for that Type.

#### 2.2 Generating system

A claim of conformance with this International Standard shall specify which Type(s) is (are) supported. A system generating an ODC for interchange shall be entitled to claim conformance with this Standard if it meets all mandatory requirements of this Standard for the Type(s) specified.

#### 2.3 Receiving system

A claim of conformance with this International Standard shall specify which Type(s) is (are) supported.

A system receiving an ODC for interchange shall be entitled to claim conformance with this International Standard if it is able to handle any recording made on the cartridge according to 2.1 on the Type(s) specified.



Copyright International Organization for Standardization
Provided by IHS under license with ISO
No reproduction or networking permitted without license from IHS Not for Resale

## 3 Normative references

The following standards contain provisions which, through reference in this text, constitute provisions of this International Standard. At the time of publication, the editions indicated were valid. All standards are subject to revision, and parties to agreements based on this International Standard are encouraged to investigate the possibility of applying the most recent editions of the standards listed below. Members of IEC and ISO maintain registers of currently valid International Standards.

ISO 683-13:1986, *Heat treatable steels, alloy steels and free-cutting steels - Part 13: Wrought stainless steels.*

IEC 950:1991, *Safety of information technology equipment, including electrical business equipment.*

## 4 Definitions

For the purposes of this International Standard the following definitions apply.

**4.1 case:** The housing for an optical disk, that protects the disk and facilitates disk interchange.

**4.2 Cyclic Redundancy Check (CRC):** A method for detecting errors in data.

**4.3 embossed mark:** A mark so formed as to be unalterable by magneto-optical means.

**4.4 entrance surface:** The surface of the disk on to which the optical beam first impinges.

**4.5 Error Correction Code (ECC):** An error-detecting code designed to correct certain kinds of errors in data.

**4.6 field:** A subdivision of a sector.

**4.7 format:** The arrangement or layout of information on the disk.

**4.8 groove:** See 4.11.

**4.9 interleaving:** The process of allocating the physical sequence of units of data so as to render the data more immune to burst errors.

**4.10 Kerr rotation:** The rotation of the plane of polarization of an optical beam upon reflection from the recording layer, as caused by the magneto-optical effect.

**4.11 land and groove:** A trench-like feature of the disk, applied before the recording of any information, and used to define the track location. The groove is located nearer to the entrance surface than the land with which it is paired to form a track.

**4.12 mark:** A feature of the recording layer which may take the form of a magnetic domain, a pit, or any other type or form that can be sensed by the optical system. The pattern of marks represents the data on the disk.

NOTE - Subdivisions of a sector which are named "mark" are not marks in the sense of this definition.

**4.13 optical disk:** A disk that will accept and retain information in the form of marks in a recording layer, that can be read with an optical beam.

**4.14 optical disk cartridge (ODC):** A device consisting of a case containing an optical disk.

**4.15 polarization:** The direction of polarization of an optical beam is the direction of the electric vector of the beam.

NOTE - The plane of polarization is the plane containing the electric vector and the direction of propagation of the beam. The polarization is right-handed when to an observer looking in the direction of propagation of the beam, the end-point of the electric vector would appear to describe an ellipse in the clockwise sense.

**4.16 recording layer:** A layer of the disk on, or in, which data is written during manufacture and/or use.

**4.17 Reed-Solomon code:** An error detection and/or correction code which is particularly suited to the correction of errors which occur in bursts or are strongly correlated.

**4.18 rewritable optical disk:** An optical disk in which the data in specified areas can be written, erased and rewritten by an optical beam.

**4.19 sector:** The smallest addressable part of a track in the information zone of a disk that can be accessed independently of other addressable parts of the zone.

**4.20 substrate:** A transparent layer of the disk, provided for the mechanical support of the recording layer, through which the optical beam accesses the recording layer.



Copyright International Organization for Standardization
Provided by IHS under license with ISO
No reproduction or networking permitted without license from IHS
Not for Resale

**4.21 track:** The path which is to be followed by the focus of the optical beam during one revolution of the disk.

**4.22 write-once functionality:** A disk with write-once functionality can be initialized and written once in specified areas and read many times by an optical beam. Erasing of data in these specified areas is not permitted.

**4.23 zone:** An annular area of the disk.

## 5 Conventions and notations

### 5.1 Representation of numbers

- A measured value is rounded off to the least significant digit of the corresponding specified value. It implies that a specified value of 1,26 with a positive tolerance of +0,01, and a negative tolerance of -0,02 allows a range of measured values from 1,235 to 1,275.
- Letters and digits in parentheses represent numbers in the hexadecimal notation.
- The setting of a bit is denoted by ZERO or ONE.
- Numbers in binary notation and bit combinations are represented by strings of ZEROs and ONEs.
- Numbers in binary notation and bit combinations are shown with the most significant bit to the left.
- Bit combinations are shown with the most significant bit to the left.
- Negative values of numbers in binary notation are expressed in TWO's complement notation.
- In each field the data is recorded so that the most significant byte (byte 0) is recorded first. Within each byte the least significant bit is numbered 0 and is recorded last, the most significant bit (numbered 7 in an 8-bit byte) is recorded first. This order of recording applies also to the data input of the Error Detection and Correction circuits and to their output.

### 5.2 Names

The names of entities, e.g. specific tracks, fields, etc., are given with a capital initial.

## 6 List of acronyms

| | |
|---|---|
| AM | Address Mark |
| CCS | Continuous Composite Servo (tracking method) |
| CRC | Cyclic Redundancy Code |
| DDS | Disk Definition Structure |
| DMA | Defect Management Area |
| DMP | Defect Management Pointers |
| ECC | Error Correction Code |
| ID | Identifier |
| LBA | Logical Block Address |
| LDC | Long Distance Code |
| LSB | Least Significant Byte |
| MSB | Most Significant Byte |
| ODC | Optical Disk Cartridge |
| ODF | Offset Detection Flag |
| PA | Postamble |
| PDL | Primary Defect List |
| PEP | Phase Encoded Part of the Control Tracks |
| RLL(2,7) | Run Length Limited (code) |
| R-S | Reed-Solomon |
| SCSI | Small Computer Systems Interface |
| SDL | Secondary Defect List |
| SFP | Standard Formatted Part of the Control Tracks |
| SM | Sector Mark |
| VFO | Variable Frequency Oscillator |
| ZCAV | Zoned Constant Angular Velocity |



Copyright International Organization for Standardization
Provided by IHS under license with ISO
No reproduction or networking permitted without license from IHS
Not for Resale

ZST Zone Structure Table

## 7 General description of the optical disk cartridge

The optical disk cartridge which is the subject of this International Standard consists of a case containing an optical disk.

The case is a protective enclosure for the disk. It has access windows covered by a shutter. The windows are automatically uncovered by the drive when the cartridge is inserted into it.

The optical disk is recordable on both sides. Data can be written onto the disk as mark in the form of magnetic domains in the recording layer and can be erased from it with a focussed optical beam, using the thermo-magnetic effect. The data can be read with a focussed optical beam, using the magneto-optical Kerr effect. The beam accesses the recording layer through the transparent substrate of the disk.

The disk is intended for use in a drive with optical access from one side only. To gain access to the second side of a disk, the cartridge must be reversed before insertion into the drive.

## 8 General requirements

### 8.1 Environments

#### 8.1.1 Testing environment

The test environment is the environment where the air immediately surrounding the optical disk cartridge shall have the following properties

| | |
|---|---|
| temperature | : 23 °C ± 2 °C |
| relative humidity (RH) | : 45 % to 55 % |
| atmospheric pressure | : 60 kPa to 106 kPa |
| air cleanliness | : Class 100 000 (see annex N) |

No condensation on or in the ODC shall occur. Before testing, the optical disc cartridge shall be conditioned in this environment for 48h min. It is recommended that, before testing, the entrance surface of the optical disk be cleaned according to the instructions of the manufacturer of the disk.

Unless otherwise stated, all tests and measurements shall be made in this testing environment.

#### 8.1.2 Operating environment

This International Standard requires that an optical disk cartridge which meets all requirements of this International Standard in the specified test environment provides data interchange over the specified ranges of environmental parameters in the operating environment.

The operating environment is the environment where the air immediately surrounding the optical disk cartridge shall have the following properties

| | |
|---|---|
| temperature | : 5 °C to 55 °C |
| relative humidity | : 3 % to 85 % |
| absolute humidity | : 1 $g/m^3$ to 30 $g/m^3$ |
| atmospheric pressure | : 60 kPa to 106 kPa |
| temperature gradient | : 0 °C /h max. |
| relative humidity gradient | : 10 % /h max. |
| air cleanliness | : Office environment (see annex H) |
| magnetic field strength at the recording layer for any condition under which a beam is in focus | : 32 000 A/m max. |
| magnetic field strength at the recording layer during any other condition. | : 48 000 A/m max. |

No condensation on or in the optical disk cartridge shall be allowed to occur. If an optical disk cartridge has been exposed to conditions outside those specified in this clause, it shall be acclimatized in an allowed operating environment for at least 2 h before use (see also annex M).



Copyright International Organization for Standardization
Provided by IHS under license with ISO
No reproduction or networking permitted without license from IHS
Not for Resale

### 8.1.3 Storage environment

The optical disk cartridge without any protective enclosure shall not be stored in an environment outside the range allowed for storage. The storage environment is defined as an environment where the air immediately surrounding the optical disk cartridge shall have the following properties

| | |
|---|---|
| temperature | : -10 °C to 55 °C |
| relative humidity | : 3 % to 90 % |
| absolute humidity | : 1 $g/m^3$ to 30 $g/m^3$ |
| atmospheric pressure | : 60 kPa to 106 kPa |
| temperature gradient | : 15 °C /h max. |
| relative humidity gradient | : 10 % /h max. |
| air cleanliness | : Office environment (see annex H) |
| magnetic field strength at the recording layer | : 48 000 A/m max. |

No condensation on or in the optical disk cartridge shall occur.

### 8.1.4 Transportation

This International Standard does not specify requirements for transportation; guidance is given in annex P.

### 8.2 Temperature shock

The optical disk cartridge shall withstand a temperature shock of up to 20°C when inserted into, or removed from, the drive.

### 8.3 Safety requirements

The cartridge shall satisfy the safety requirements of IEC 950, when used in its intended manner or in any foreseeable use in an information processing system.

### 8.4 Flammability

The cartridge and its components shall be made from materials that comply with the flammability class for HB materials, or as specified in IEC 950.

## 9 Reference Drive

The Reference Drive is a collection of several critical components which have well defined properties and which are used to test write, read and erase parameters of the disk for conformance to this International Standard. The critical components vary from test to test. This clause gives an outline of all components; components critical for tests in specific clauses only are specified in these clauses.

### 9.1 Optical system

The basic set-up of the optical system of the Reference Drive used for measuring the write, read and erase parameters is shown in figure 1. Different components and locations of components are permitted, provided that the performance remains the same as that of the set-up in figure 1. The optical system shall be such that the detected light reflected from the entrance surface of the disk is minimized so as not to influence the accuracy of the measurements.



Copyright International Organization for Standardization
Provided by IHS under license with ISO
No reproduction or networking permitted without license from IHS
Not for Resale

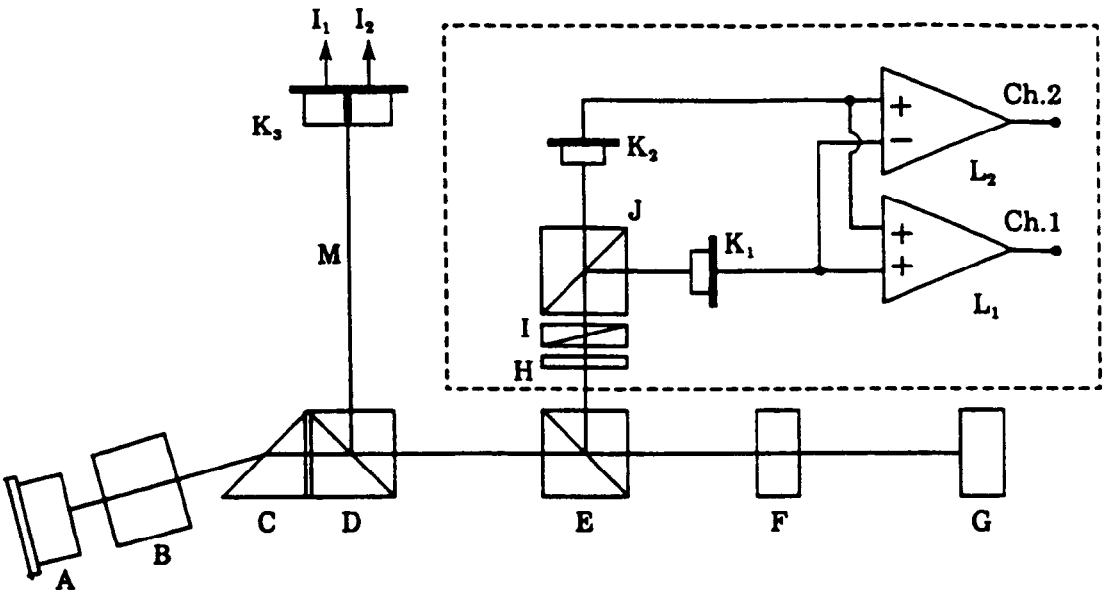


| | | | |
|---|---|---|---|
| A | Laser diode | G | Optical disk |
| B | Collimator lens | H | Optical half-wave plate |
| C | Optical shaping prism | I | Optical phase retarder |
| Ch.1 | Channel 1 | J | Polarizing beam splitter |
| Ch.2 | Channel 2 | $K_1$,$K_2$ | Photodiode for Channels 1 and 2 |
| D | Polarizing Beam splitter | $K_3$ | Split photodiode for focus and tracking servo |
| E | Leaky beam splitter | $L_1$,$L_2$ | d.c.-coupled amplifier |
| F | Objective lens | M | Tracking Channel |

**Figure 1 - Optical system of the Reference Drive**

In the absence of polarization changes in the disk, the polarizing beam splitter J shall be aligned to make the signal of detector $K_1$ equal to that of detector $K_2$. The direction of polarization in this case is called the neutral direction. The phase retarder I shall be adjusted such that the optical system does not have more than 2,5° phase retardation between the neutral polarization and the polarization perpendicular to it. This position of the retarder is called the neutral position.

The phase retarder can be used for the measurement of the narrow-band signal-to-noise ratio.

The beam splitter J shall have a p-s intensity reflectance ratio of at least 100.

The intensity reflectance $R_p$ of the beam splitter E from F to H for the neutral polarization direction shall be nominally 0,10. The reflectance $R_s$ for the polarization perpendicular to the neutral direction shall be nominally 0,99. The actual value of $R_s$ shall not be smaller than 0,95.

The imbalance of the magneto-optical signal is specified for the beam splitter with nominal reflectances. If the measurement is made on a drive with reflectances $R_p'$ and $R_s'$ for the beam splitter E, then the measured imbalance shall be multiplied by

$$\sqrt{\frac{R_s R'_p}{R_p R'_s}}$$

to make it correspond to the nominal beam splitter E.



Copyright International Organization for Standardization
Provided by IHS under license with ISO
No reproduction or networking permitted without license from IHS
Not for Resale

The output of Channel 1 is the sum of the currents through photo-diodes $K_1$ and $K_2$, and is used for reading embossed marks. The output of Channel 2 is the difference between photo-diode currents, and is used for reading user-written marks with the magneto-optical effect.

### 9.2 Optical beam

The focussed optical beam used for writing, reading and erasing data shall have the following properties

| | |
|---|---|
| Environment | : Test environment |
| Wavelength ($\lambda$) | : 780 $nm^{+15}_{-10}$ nm |
| Wavelength ($\lambda$) divided by the numerical aperture (NA) of the objective lens | : $\lambda$/NA = 1,423 µm ± 0,023 µm |
| Filling of the lens aperture (D/W) where D is the diameter of the lens aperture and W is the $1/e^2$ beam diameter of the Gaussian beam | : 1,0 max. |
| Variance of the wave front of the optical beam at the recording layer | : $\lambda^2/180$ max. |
| Polarization | : Parallel to the track |

### 9.3 Read Channels

Two read Channels shall be provided to generate signals from the marks in the recording layer. Channel 1 shall be used for reading the embossed marks, using the diffraction of the optical beam by the marks. Channel 2 shall be used for reading the user-written marks, using the rotation of the polarization of the optical beam due to the magneto-optical effect of the marks. The read amplifiers after the photo-detectors in Channel 1 and Channel 2 shall have a flat response within ± 1 dB from 100 kHz to 11,6 MHz.

### 9.4 Tracking

The Tracking Channel of the drive provides the tracking error signals to control the servos for the axial and radial tracking of the optical beam. The method of generating the axial tracking error is not specified for the Reference Drive. The radial tracking error is generated by a split photo-diode detector in the Tracking Channel. The division of the diode runs parallel to the image of the tracks on the diode.

### 9.5 Rotation of the disk

The spindle shall position the disk as specified in 13.6. It shall rotate the disk at 30,0 Hz ± 0,3 Hz. The direction shall be counter-clockwise when viewed from the objective lens.



Copyright International Organization for Standardization
Provided by IHS under license with ISO
No reproduction or networking permitted without license from IHS
Not for Resale

## Section 2 - Mechanical and physical characteristics

# 10 Dimensions and mechanical characteristics of the case

## 10.1 General

The case shall be a rigid, protective enclosure of rectangular shape and include a shutter which uncovers access windows upon insertion into the drive, and automatically covers them upon removal from the drive. The case shall have means for positioning and identifying the cartridge, and write-inhibit holes.

The dimensions of the inside of the case are not specified in this International Standard, but are determined by the movement of the disk inside the case allowed by 13.5 and 13.6.

## 10.2 Case drawings

The case is represented schematically by the following drawings.

- Figure 2 shows the hub dimensions.
- Figure 3 shows a composite drawing of Side A of the case in isometric form, with the major features identified from Side A.
- Figure 4 shows the envelope of the case with respect to a location hole at the intersection of the X and Y axes and reference plane P.
- Figure 5 a) shows the surfaces $S_1$, $S_2$, $S_3$ and $S_4$ which establish the reference plane P.
- Figure 5 b) shows the details of surface $S_3$.
- Figure 6 shows the details of the insertion slot and detent.
- Figure 7 shows the gripper slots, used for automatic handling.
- Figure 8 shows the write-inhibit holes.
- Figure 9 shows the media ID sensor holes.
- Figure 10 shows the shutter sensor notch.
- Figure 11 shows the head and motor window.
- Figure 12 shows the shutter opening features.
- Figure 13 shows the capture cylinder.
- Figure 14 shows the user label areas.

## 10.3 Sides, reference axes and reference planes

### 10.3.1 Relationship of Sides A and B

The features essential for physical interchangeability are represented in figure 5. When Side A of the cartridge faces upwards, Side A of the disk faces downwards. Sides A and B of the case are identical as far as the features given here are concerned. The description is given for one side only. References to Sides A and B can be changed to B or A respectively.

Only the shutter and the slot for the shutter opener, described in 10.14 and 10.15 are not identical for both sides of the case.

### 10.3.2 Reference axes and case reference planes

There is a reference plane P for each side of the case. Each reference plane P contains two orthogonal axes X and Y to which the dimensions of the case are referred. The intersection of the X and Y axes defines the centre of the location hole. The X axis extends through the centre of the alignment hole.

## 10.4 Materials

The case shall be constructed from any suitable materials such that it meets the requirements of this International Standard.



Copyright International Organization for Standardization
Provided by IHS under license with ISO
No reproduction or networking permitted without license from IHS
Not for Resale

### 10.5 Mass

The mass of the case without the optical disk shall not exceed 150 g.

### 10.6 Overall dimensions

See figure 4.

The total length of the case shall be

$L_1 = 153{,}0 \text{ mm} \pm 0{,}4 \text{ mm}$

The distance from the top of the case to the reference axis X shall be

$L_2 = 127{,}0 \text{ mm} \pm 0{,}3 \text{ mm}$

The distance from the bottom of the case to the reference axis X shall be

$L_3 = 26{,}0 \text{ mm} \pm 0{,}3 \text{ mm}$

The total width of the case shall be

$L_4 = 135{,}0 \text{ mm} \begin{smallmatrix} +0{,}0 \\ -0{,}6 \end{smallmatrix} \text{ mm}$

The distance from the left-hand side of the cartridge to the reference axis Y shall be

$L_5 = 128{,}5 \text{ mm} \begin{smallmatrix} +0{,}0 \\ -0{,}5 \end{smallmatrix} \text{ mm}$

The distance from the right-hand side of the cartridge to the reference axis Y shall be

$L_6 = 6{,}5 \text{ mm} \pm 0{,}2 \text{ mm}$

The width shall be reduced on the top by the radius

$R_1 = L_4$

originating from a point defined by $L_5$ and

$L_7 = 101{,}0 \text{ mm} \pm 0{,}3 \text{ mm}$

The two corners of the top shall be rounded with a radius

$R_2 = 1{,}5 \text{ mm} \pm 0{,}5 \text{ mm}$

and the two corners at the bottom with a radius

$R_3 = 3{,}0 \text{ mm} \pm 1{,}0 \text{ mm}$

The thickness of the case shall be

$L_8 = 11{,}00 \text{ mm} \pm 0{,}30 \text{ mm}$

The eight long edges of the case shall be rounded with a radius

$R_4 = 1{,}0 \text{ mm max.}$

### 10.7 Location hole

See figure 4.

The centre of the location hole shall coincide with the intersection of the reference axes X and Y. It shall have a square form with a side length of

$L_9 = 4{,}10 \text{ mm} \begin{smallmatrix} +0{,}00 \\ -0{,}06 \end{smallmatrix} \text{ mm}$

held to a depth of

$L_{10} = 1{,}5 \text{ mm}$ (i.e. typical wall thickness)

after which a cavity extends through to the alignment hole on the opposite side of the case.



Copyright International Organization for Standardization
Provided by IHS under license with ISO
No reproduction or networking permitted without license from IHS
Not for Resale

The lead-in edges shall be rounded with a radius

$R_5 = 0{,}5$ mm max.

### 10.8 Alignment hole

See figure 4.

The centre of the alignment hole shall lie on reference axis X at a distance of

$L_{11} = 122{,}0$ mm ± 0,2 mm

from the reference axis Y.

The dimensions of the hole shall be

$L_{12} = 4{,}10\ ^{+0{,}00}_{-0{,}06}$ mm

and

$L_{13} = 5{,}0\ ^{+0{,}2}_{-0{,}0}$ mm

held to a depth of $L_{10}$, after which a cavity extends through to the location hole on the opposite side of the case.

The lead-in edges shall be rounded with radius $R_5$.

### 10.9 Surfaces on reference planes P

See figures 5 a) and 5 b).

The reference plane P for a side of the case shall contain four surfaces ($S_1$, $S_2$, $S_3$ and $S_4$) on that side of the case, specified as follows:

– Two circular surfaces $S_1$ and $S_2$.

Surface $S_1$ shall be a circular area centred around the square location hole and have a diameter of

$D_1 = 9{,}0$ mm min.

Surface $S_2$ shall be a circular area centred around the rectangular alignment hole and have a diameter of

$D_2 = 9{,}0$ mm min.

– Two elongated surfaces $S_3$ and $S_4$, that follow the contour of the cartridge and shutter edges.

Surfaces $S_3$ and $S_4$ are shaped symmetrically.

Surface $S_3$ shall be defined by two circular sections with radii

$R_6 = 1{,}5$ mm ± 0,1 mm

with an origin given by

$L_{14} = 4{,}0$ mm ± 0,1 mm

$L_{15} = 86{,}0$ mm ± 0,3 mm

and

$R_7 = 1{,}5$ mm ± 0,1 mm

with an origin given by

$L_{16} = 1{,}9$ mm ± 0,1 mm

$L_{17} = 124{,}5$ mm ± 0,3 mm

The arc with radius $R_7$ shall continue on the right hand side with radius

$R_8 = 134{,}0\ ^{+0{,}2}_{-0{,}7}$ mm



Copyright International Organization for Standardization
Provided by IHS under license with ISO
No reproduction or networking permitted without license from IHS
Not for Resale

which is a dimension resulting from $L_5 + L_{14} + R_6$ with an origin given by $L_5$ and $L_7$. A straight, vertical line shall smoothly join the arc of $R_6$ to the arc of $R_8$.

The left-hand side of $S_3$ shall be bounded by radius

$R_9 = 4{,}5$ mm ± 0,3 mm

which is a dimension resulting from $L_{18} + L_{14} - R_6$ with an origin given by

$L_{18} = 2{,}0$ mm ± 0,1 mm

$L_{19} = 115{,}5$ mm ± 0,3 mm

The left-hand side of the boundary shall be closed by two straight lines. The first one shall smoothly join the arc of $R_6$ to the arc of $R_9$. The second one shall run from the left hand tangent of $R_7$ to its intersection with $R_9$. Along the left hand side of surface $S_3$ there shall be a zone to protect $S_3$ from being damaged by the shutter. In order to keep this zone at a minimum practical width

$R_{10} = 4{,}1$ mm max.

This radius originates from the same point as $R_9$.

### 10.10 Insertion slots and detent features

See figure 6.

The case shall have two symmetrical insertion slots with embedded detent features. The slots shall have a length of

$L_{20} = 26{,}0$ mm ± 0,3 mm

a width of

$L_{21} = 6{,}0\ ^{+\,0{,}3}_{-\,0{,}0}$ mm

and a depth of

$L_{22} = 3{,}0$ mm ± 0,1 mm

located

$L_{23} = 2{,}5$ mm ± 0,2 mm

from reference plane P.

The slots shall have a lead-in chamfer given by

$L_{24} = 0{,}5$ mm max.

$L_{25} = 5{,}0$ mm max.

The detent notch shall be a semi-circle of radius

$R_{11} = 3{,}0$ mm ± 0,2 mm

with the origin given by

$L_{26} = 13{,}0$ mm ± 0,3 mm

$L_{27} = 2{,}0$ mm ± 0,1 mm

$L_{73} = 140{,}0$ mm ± 0,3 mm

The dimensions of $L_2$, $L_{26}$ and $L_{73}$ are interrelated, their values shall be such that they are all three within specification.

### 10.11 Gripper slots

See figure 7.

The case shall have two symmetrical gripper slots with a depth of

$L_{28} = 5{,}0$ mm ± 0,3 mm



Copyright International Organization for Standardization
Provided by IHS under license with ISO
No reproduction or networking permitted without license from IHS
Not for Resale

from the edge of the case and a width of

$L_{29}$ = 6,0 mm ± 0,3 mm

The upper edge of a slot shall be

$L_{30}$ = 12,0 mm ± 0,3 mm

above the bottom of the case.

### 10.12 Write-inhibit holes

See figure 8.

Sides A and B shall each have a write-inhibit hole. The case shall include a device for opening and closing each hole. The hole at the left-hand side of Side A of the case, is the write-inhibit hole for Side A of the disk. The protected side of the disk shall be made clear by inscriptions on the case or by the fact that the device for Side A of the disk can only be operated from Side A of the case.

When writing and erasing on Side A of the disk are not allowed, the write-inhibit hole shall be open all through the case. It shall have a diameter

$D_3$ = 4,0 mm min.

Its centre shall be specified by

$L_{31}$ = 8,0 mm ± 0,2 mm

$L_{32}$ = 111,0 mm ± 0,3 mm

on Side A of the case.

When writing and erasing are allowed on Side A of the disk, the write-inhibit hole shall be closed on Side A of the case, at a depth of typically $L_{10}$, i.e. the wall thickness of the case. In this state, the opposite side of the same hole, at Side B of the case, shall be closed and not recessed from the reference plane P of Side B of the case by more than

$L_{33}$ = 0,5 mm

The opposite side of the write-inhibit hole for protecting Side B of the disk shall have a diameter $D_3$. Its centre shall be specified by $L_{31}$ and

$L_{34}$ = 11,0 mm ± 0,2 mm

on Side A of the case.

### 10.13 Media sensor holes

See figure 9.

There shall be two sets of four media sensor holes. The set of holes at the lower left hand corner of Side A of the case pertains to Side A of the disk. The holes shall extend through the case, and have a diameter of

$D_4 = 4{,}0\ \text{mm}\ {}^{+0,3}_{-0,0}\ \text{mm}$

the positions of their centres shall be specified by $L_{32}$, $L_{34}$ and

$L_{35}$ = 19,5 mm ± 0,2 mm

$L_{36}$ = 17,0 mm ± 0,2 mm

$L_{37}$ = 23,0 mm ± 0,2 mm

$L_{38}$ = 29,0 mm ± 0,2 mm

$L_{39}$ = 93,0 mm ± 0,3 mm

$L_{40}$ = 99,0 mm ± 0,3 mm

$L_{41}$ = 105,0 mm ± 0,3 mm



Copyright International Organization for Standardization
Provided by IHS under license with ISO
No reproduction or networking permitted without license from IHS
Not for Resale

A hole is deemed to be open when there is no obstruction in this hole over a diameter $D_4$ all through the case.

A hole for Side A of the disk is deemed to be closed, when the hole is closed on both Side A and Side B of the case. The closure shall be recessed from reference plane P by

$L_{42}$ = 0,1 mm max.

The holes are numbered consecutively from 1 to 4. Hole No. 1 is the hole closest to the left hand edge of the case. The optical disk cartridge according to this International Standard does not use any holes. All four holes shall be in the closed state.

### 10.14 Head and motor window

See figure 11.

The case shall have a window on each side to enable the optical head and the motor to access the disk. The dimensions are referenced to a centreline, located at a distance of

$L_{46}$ = 61,0 mm ± 0,2 mm

to the left of reference axis Y.

The width of the head access shall be

$L_{47}$ = 20,00 mm min.

$L_{48}$ = 20,00 mm min.

and its height shall extend from

$L_{49}$ = 118,2 mm min. to

$L_{50}$ = 57,0 mm max.

The four inside corners shall be rounded with a radius of

$R_{12}$ = 3,0 mm max.

The motor access has a diameter of

$D_5$ = 35,0 mm min.

and its centre shall be defined by $L_{46}$ and

$L_{51}$ = 43,0 mm ± 0,2 mm

### 10.15 Shutter

See figure 12.

The case shall have a spring-loaded, unidirectional shutter with an optional latch, designed to completely cover the head and motor windows when closed. A shutter movement of 41,5 mm min. shall be sufficient to ensure that the head and motor window is opened to the minimum size specified in 10.14. The shutter shall be free to slide in a recessed area of the case in such a way as to ensure that the overall thickness shall not exceed $L_8$. The spring shall be sufficiently strong to close a free-sliding shutter, irrespective of the orientation of the cartridge.

The shutter opening force shall be 3 N max.

The right-hand side of the top of the shutter shall have a lead-in ramp with an angle

$A_2$ = 25° max.

The distance from the reference planes P to the nearest side of the ramp shall be

$L_{52}$ = 3,0 mm max.

### 10.16 Slot for shutter opener

See figure 12.



Copyright International Organization for Standardization
Provided by IHS under license with ISO
No reproduction or networking permitted without license from IHS
Not for Resale

The shutter shall have only one slot in which the shutter opener of the drive can engage to open the shutter. The slot shall be dimensioned as follows: When the shutter is closed, the vertical edge used to push the shutter open shall be located at a distance of

$L_{53} = 34{,}5 \text{ mm} \pm 0{,}5 \text{ mm}$

from reference axis Y on Side B of the case.

The length of the slot shall be

$L_{54} = 4{,}5 \text{ mm} \pm 0{,}1 \text{ mm}$

and the angle of the lead-out ramp shall be

$A_3 = 52{,}5° \pm 7{,}5°$.

The depth of the slot shall be

$L_{55} = 3{,}5 \text{ mm} \pm 0{,}1 \text{ mm}$

The width of the slot from the reference plane P of Side B of the case shall be

$L_{56} = 6{,}0 \text{ mm} \begin{smallmatrix} +0{,}5 \\ -0{,}0 \end{smallmatrix} \text{ mm}$

If a shutter latch is employed, the distance between the latch and reference plane P of Side B of the case shall be

$L_{57} = 3{,}0 \text{ mm max.}$

### 10.17 Shutter sensor notch

See figure 10.

The shutter sensor notch is used to ensure that the shutter is fully open after insertion of the optical disk cartridge into the drive. Therefore, the notch shall be exposed only when the shutter is fully open.

The dimensions shall be

$L_{43} = 3{,}5 \text{ mm} \pm 0{,}2 \text{ mm}$

$L_{44} = 71{,}0 \text{ mm} \pm 0{,}3 \text{ mm}$ and

$L_{45} = 9{,}0 \text{ mm} \begin{smallmatrix} +0{,}0 \\ -2{,}0 \end{smallmatrix} \text{ mm}$

The notch shall have a lead-out ramp with an angle

$A_1 = 45° \pm 2°$

### 10.18 User label areas

See figure 14.

The case shall have the following minimum areas for user labels:

- on Side A and Side B: 35,0 mm x 65,0 mm
- on the bottom side: 6,0 mm x 98,0 mm

These areas shall be recessed by 0,2 mm min. Their positions are specified by the following dimensions and relations between dimensions (see figure 14).

| | |
|---|---|
| $L_{61}$ | = 4,5 mm min. |
| $L_{62} - L_{61}$ | = 65,0 mm min. |
| $L_{64} - L_{63}$ | = 35,0 mm min. |
| $L_{65}$ | = 4,5 mm min. |
| $L_{66} - L_{65}$ | = 65,0 mm min. |
| $L_{67} + L_{68}$ | = 35,0 mm min. |



Copyright International Organization for Standardization
Provided by IHS under license with ISO
No reproduction or networking permitted without license from IHS
Not for Resale

$L_8 - L_{71} - L_{72}$ = 6,0 mm min.

$L_4 - L_{69} - L_{70}$ = 98,0 mm min.

# 11 Dimensional and physical characteristics of the disk

## 11.1 Dimensions of the disk

### 11.1.1 Outer diameter

The outer diameter of the disk shall be 130,0 mm nominal. The tolerance is determined by the movement of the disk inside the case allowed by 13.5 and 13.6.

### 11.1.2 Thickness

The total thickness of the disk outside the hub area shall be 3,20 mm max.

### 11.1.3 Clamping zone

See figure 2.

The outer diameter of the zone shall be

$D_6$ = 35,0 mm min.

The inner diameter of the zone shall be

$D_7$ = 27,0 mm max.

### 11.1.4 Clearance zone

Within the zone defined by the outer diameter of the clamping zone ($D_6$) and the inner diameter of the Reflective Zone (see 16.1) there shall be no projection from the disk reference plane in the direction of the optical system of more than 0,2 mm.

## 11.2 Mass

The mass of the disk shall not exceed 120 g.

## 11.3 Moment of inertia

The moment of inertia of the disk shall not exceed 0,22 g·m$^2$.

## 11.4 Imbalance

The imbalance of the disk shall not exceed 0,01 g·m.

## 11.5 Axial deflection

The deviation of any point of the recording layer from its nominal position, in a direction normal to the disk reference plane, shall not exceed ± 0,30 mm for rotational frequencies of the disk up to 30 Hz. The deviation shall be measured by the optical system defined in 21.1.1 and 21.1.2.

The nominal position of the recording layer with respect to the disk reference plane is determined by the nominal thickness of the substrate and its index of refraction.

## 11.6 Axial acceleration

The acceleration of the recording layer along any fixed line normal to the disk reference plane shall not exceed 10 m/s$^2$ in a band width from 30 Hz to 1,5 kHz for a rotational frequency of the disk of 30,0 Hz ± 0,3 Hz. The acceleration shall be measured by the optical system defined in 15.1.1 and 15.1.2.

## 11.7 Dynamic radial runout

The difference between the maximum and the minimum distance of any track from the axis of rotation, measured along a fixed radial line over one revolution of the disk, shall not exceed 50 µm, as measured by the optical system, for rotational frequencies of the disk up to 30 Hz.



Copyright International Organization for Standardization
Provided by IHS under license with ISO
No reproduction or networking permitted without license from IHS
Not for Resale

### 11.8 Radial acceleration

The acceleration of any track along a fixed radial line shall not exceed 3 $m/s^2$ in a band width from 30 Hz to 1,5 kHz, as measured by the optical system, at a rotational frequency of the disk of 30,0 Hz ± 0,3 Hz.

### 11.9 Tilt

The tilt angle, defined as the angle which the normal to the entrance surface, averaged over a circular area of 1 mm diameter, makes with the normal to the disk reference plane, shall not exceed 5 mrad in the operating environment.

## 12 Drop test

The optical disk cartridge shall withstand dropping on each surface and on each corner from a height of 760 mm on to a concrete floor covered with a vinyl layer 2 mm thick. The cartridge shall withstand all such impacts without any functional failure.

## 13 Interface between disk and drive

### 13.1 Clamping technique

Radial positioning of the optical disk shall be provided by the centring of the axle of the spindle in the centre hole of the hub.

The turntable of the drive spindle shall support the disk in the clamping zone, determining the axial position of the disk in the case.

A clamping force shall be provided by the attraction between magnets in the spindle and a magnetizable ring in the hub.

### 13.2 Dimensions of the hub

See figure 1.

#### 13.2.1 Outer diameter of the hub

This diameter shall be

$$D_8 = 25{,}0 \text{ mm } {}^{+\,0{,}0}_{-\,0{,}2} \text{ mm}$$

#### 13.2.2 Height of the hub

This height shall be

$$h_1 = 2{,}2 \text{ mm } {}^{+\,0{,}0}_{-\,0{,}2} \text{ mm}$$

#### 13.2.3 Diameter of the centre hole

The diameter of the centre hole shall be

$$D_9 = 4{,}004 \text{ mm } {}^{+\,0{,}012}_{-\,0{,}000} \text{ mm}$$

#### 13.2.4 Height of the top of the centre hole at diameter $D_9$

The height of the top of the centre hole at diameter $D_9$, measured above the disk reference plane, shall be

$h_2 = 2{,}0$ mm min.

#### 13.2.5 Centring length at diameter $D_9$

This length shall be

$h_3 = 0{,}5$ mm min.

The hole shall have a diameter larger than, or equal to, $D_9$ between the centring length and the disk reference plane. The hole shall extend through the substrate.



Copyright International Organization for Standardization
Provided by IHS under license with ISO
No reproduction or networking permitted without license from IHS
Not for Resale

### 13.2.6 Chamfer at diameter $D_9$

The height of the outer chamfer of the centre hole of the hub shall be

$h_4$ = 0,2 mm max.

The angle of the chamfer shall be 45°, or a corresponding full radius shall be used.

### 13.2.7 Chamfer at diameter $D_8$

The height of the chamfer at the rim of the hub shall be

$h_5 = 0{,}2 \text{ mm } {}^{+0,2}_{-0,0} \text{ mm}$

The angle of the chamfer shall be 45°, or a corresponding full radius shall be used.

### 13.2.8 Outer diameter of the magnetizable ring

This diameter shall be

$D_{10}$ = 19,0 mm min.

### 13.2.9 Inner diameter of the magnetizable ring

This diameter shall be

$D_{11}$ = 8,0 mm max.

### 13.2.10 Thickness of the magnetizable material

This thickness shall be

$h_6$ = 0,5 mm min.

### 13.2.11 Position of the top of the magnetizable ring relative to the disk reference plane

This position shall be

$h_7 = 2{,}2 \text{ mm } {}^{+0,0}_{-0,1} \text{ mm}$

## 13.3 Magnetizable material

The magnetizable material shall be ferritic stainless steel (ISO 683-13, Type 8) or any suitable material with similar magnetic characteristics.

## 13.4 Clamping force

The clamping force exerted by the spindle shall be less than 14 N.

## 13.5 Capture cylinder for the hub

See figure 13.

The capture cylinder is defined as the volume in which the spindle can expect the centre of the hole of the hub to be at the maximum height of the hub, just prior to capture. The size of the cylinder limits the allowable play of the disk inside its cavity in the case. This cylinder is referred to perfectly located and perfectly sized alignment and location pins in the drive, and includes tolerances of dimensions of the case and the disk between the two pins mentioned and the centre of the hub. The bottom of the cylinder is parallel to the reference plane P, and shall be located at a distance of

$L_{58}$ = 0,5 mm min.

above the reference plane P of Side B of the case when Side A of the disk is to be used. The top of the cylinder shall be located at a distance of

$L_{59}$ = 4,3 mm max.

above the same reference plane. The diameter of the cylinder shall be



Copyright International Organization for Standardization
Provided by IHS under license with ISO
No reproduction or networking permitted without license from IHS
Not for Resale

$D_{12}$ = 3,0 mm max.

Its centre shall be defined by the nominal values of $L_{46}$ and $L_{51}$.

### 13.6 Disk position in the operating condition

See figure 13.

When the disk is in the operating condition within the drive, the position of the active recording layer shall be

$L_{60}$ = 5,35 mm ± 0,15 mm

above reference plane P of that side of the case that faces the optical system. Moreover, the torque to be exerted on the disk in order to maintain a rotational frequency of 30 Hz shall not exceed 0,01 N·m, when the axis of rotation is within a circle with a diameter of

$D_{13}$ = 0,2 mm max.

and a centre given by the nominal values of $L_{46}$ and $L_{51}$.



Copyright International Organization for Standardization
Provided by IHS under license with ISO
No reproduction or networking permitted without license from IHS
Not for Resale

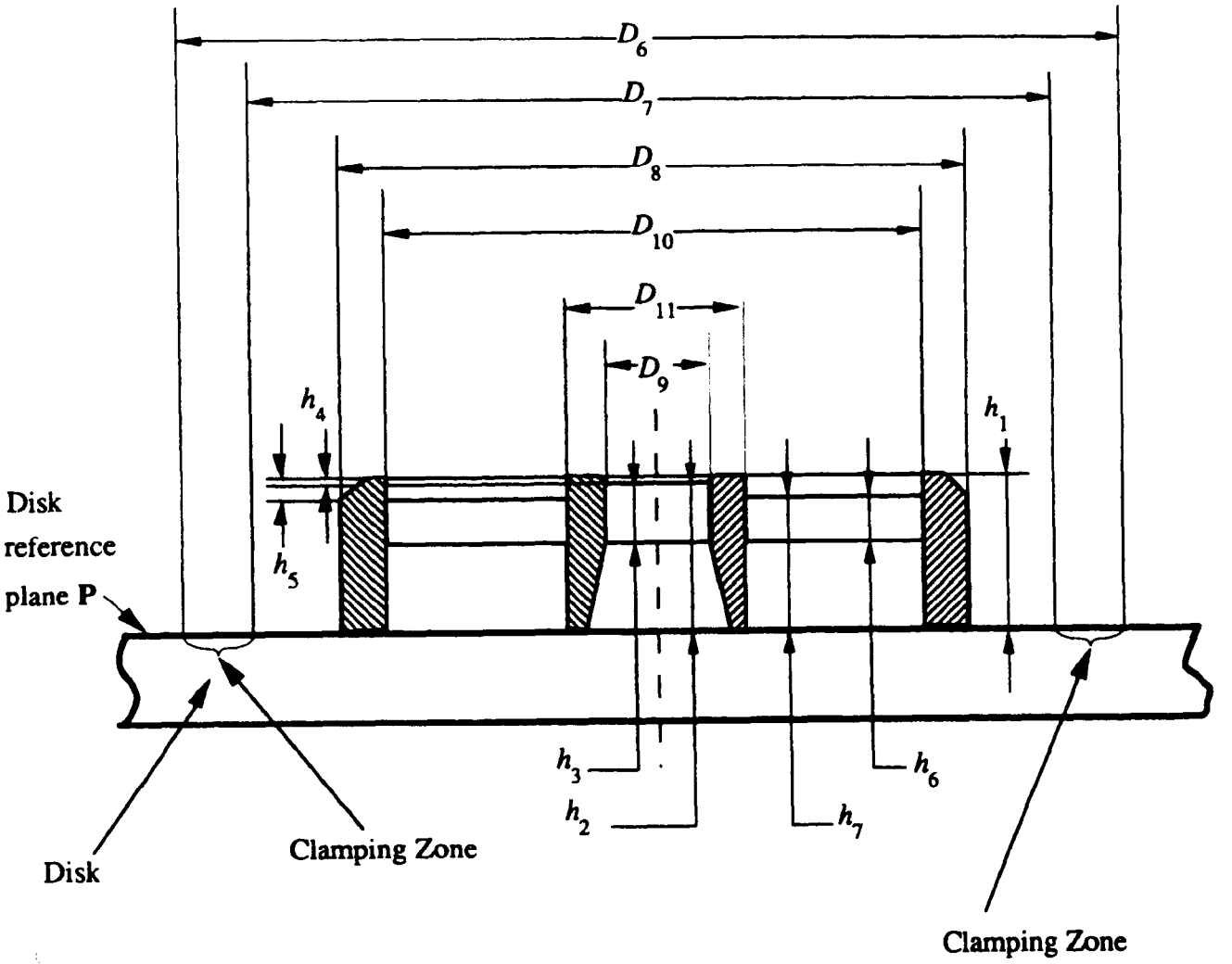


**Figure 2- Hub dimensions**



Copyright International Organization for Standardization
Provided by IHS under license with ISO
No reproduction or networking permitted without license from IHS
Not for Resale

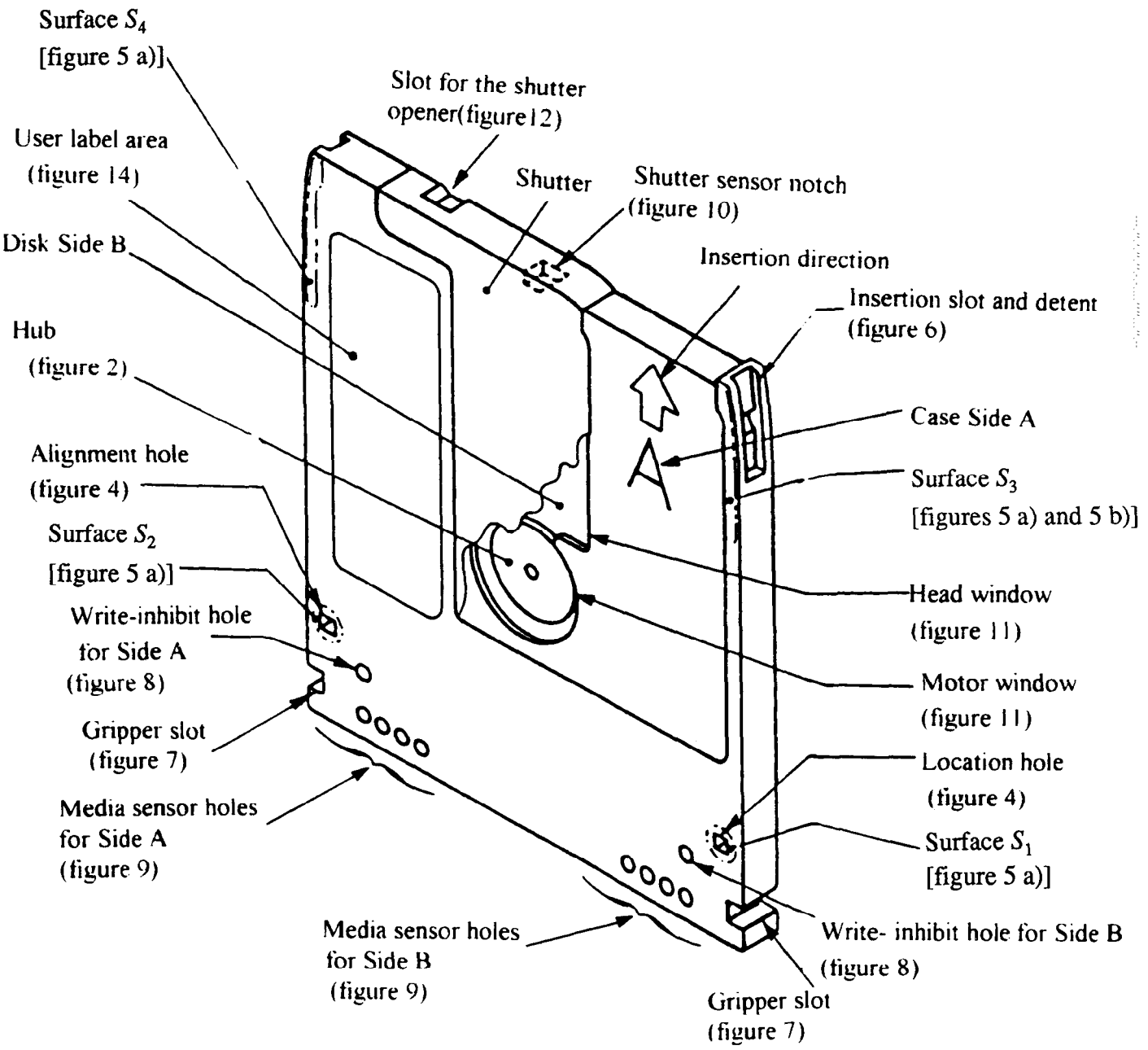


**Figure 3 - Perspective view of the case**

Copyright International Organization for Standardization
Provided by IHS under license with ISO
No reproduction or networking permitted without license from IHS
Not for Resale

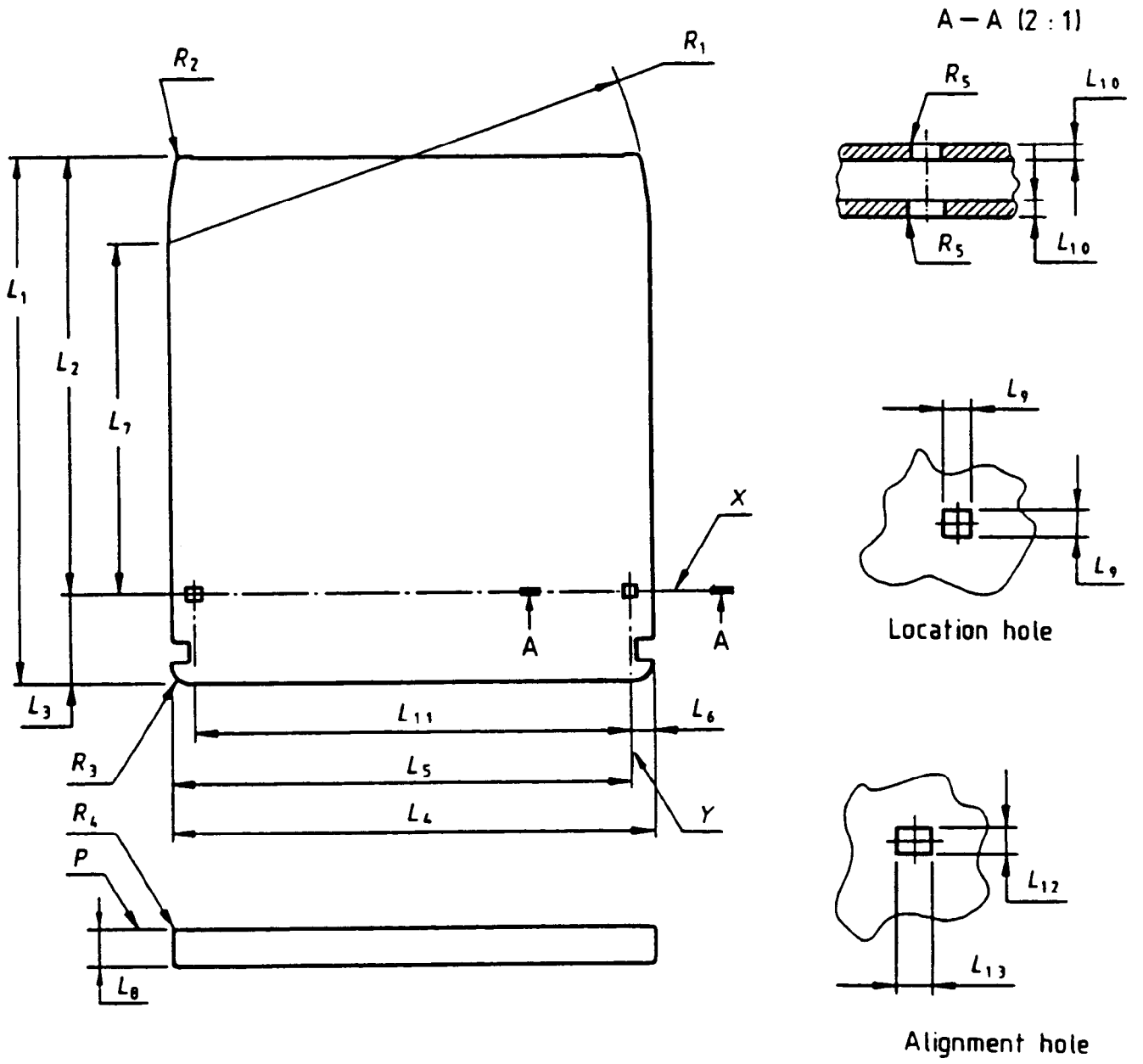


**Figure 4 - Overall dimensions and reference axes**



Copyright International Organization for Standardization
Provided by IHS under license with ISO
No reproduction or networking permitted without license from IHS
Not for Resale

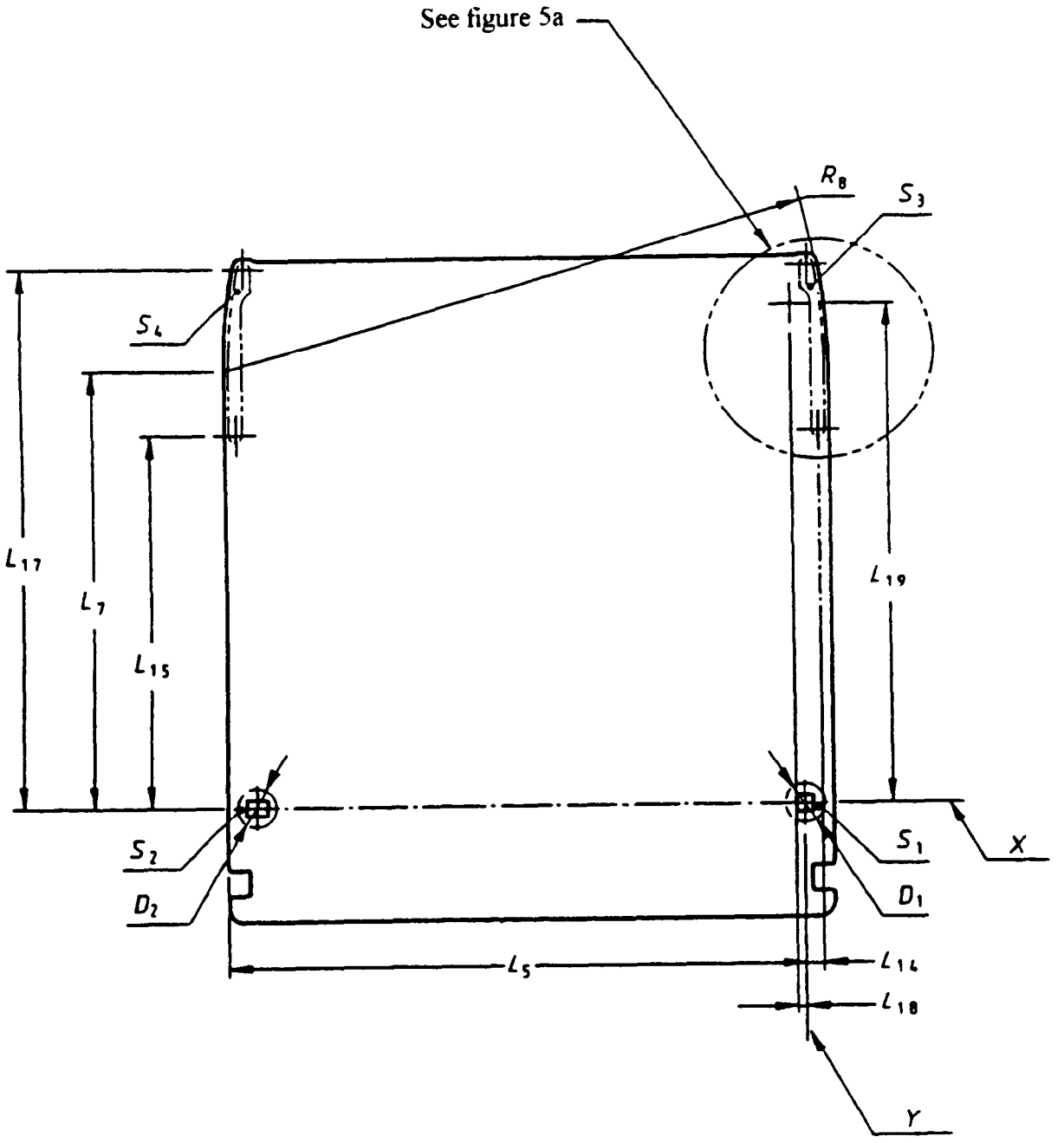


**Figure 5 a) - Surfaces $S_1$, $S_2$, $S_3$ and $S_4$ of the reference plane P**

Copyright International Organization for Standardization
Provided by IHS under license with ISO
No reproduction or networking permitted without license from IHS
Not for Resale

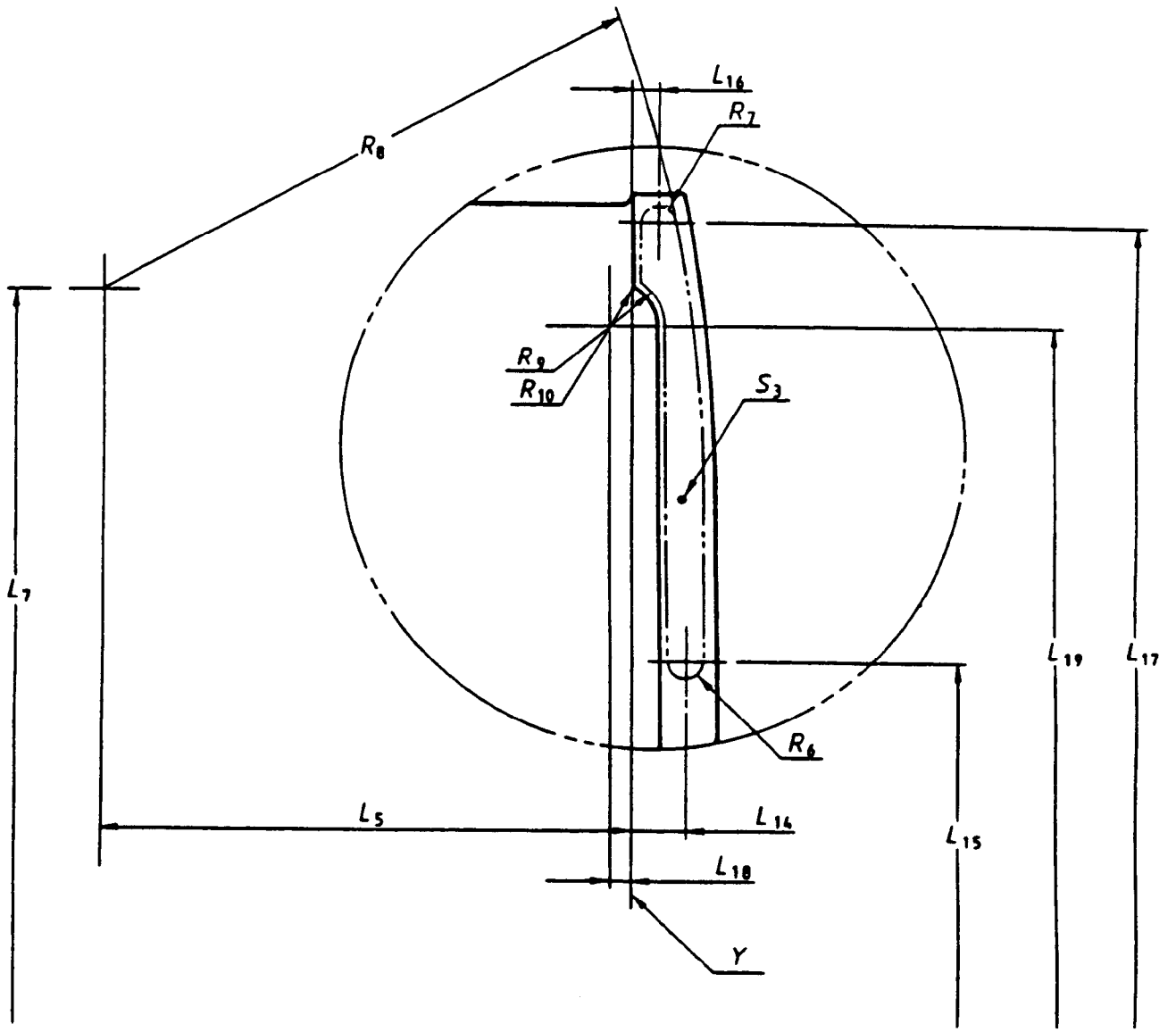


**Figure 5 b) - Detail of surface $S_3$**



Copyright International Organization for Standardization
Provided by IHS under license with ISO
No reproduction or networking permitted without license from IHS
Not for Resale

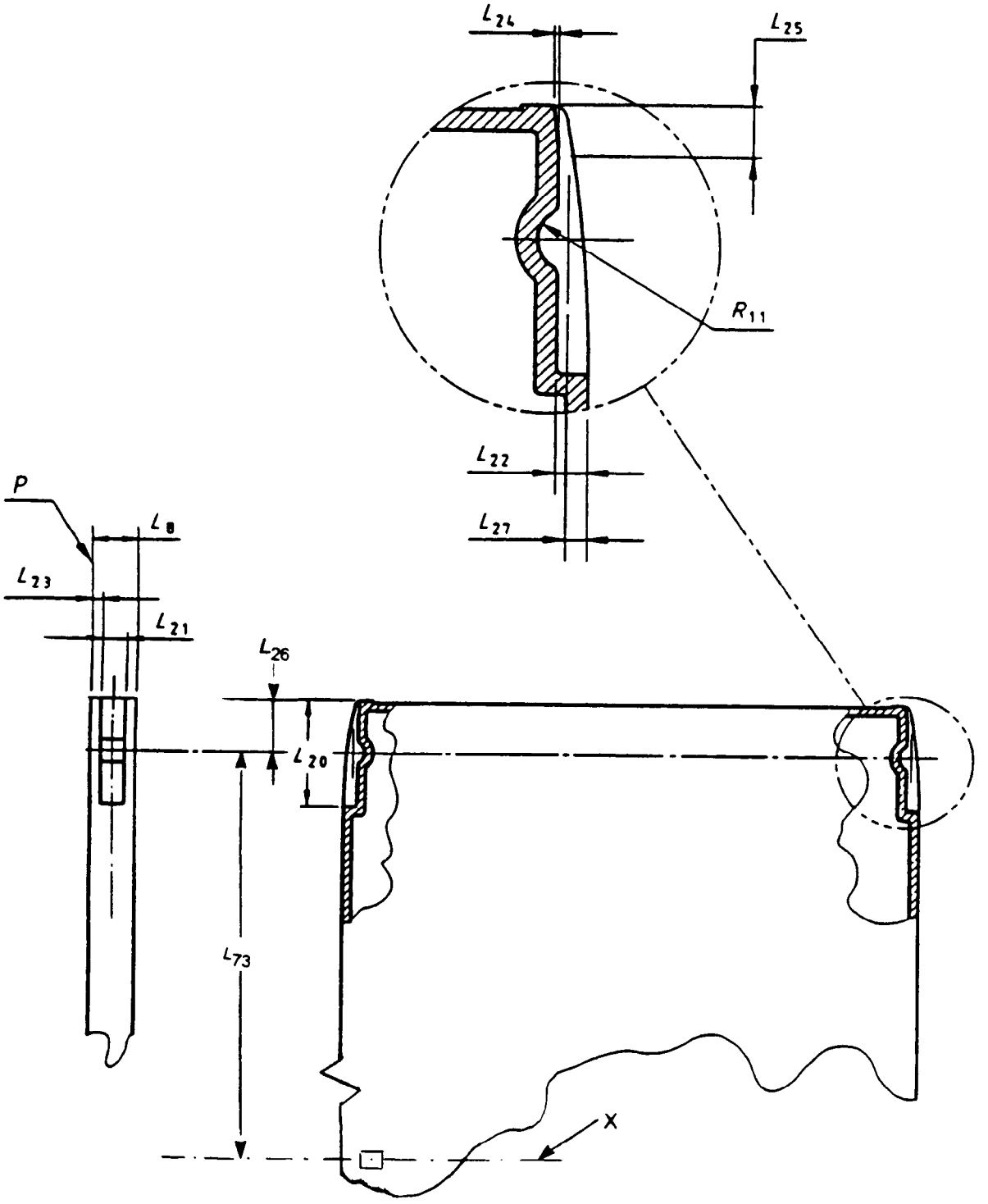


**Figure 6 - Insertion slot and detent**



Copyright International Organization for Standardization
Provided by IHS under license with ISO
No reproduction or networking permitted without license from IHS
Not for Resale

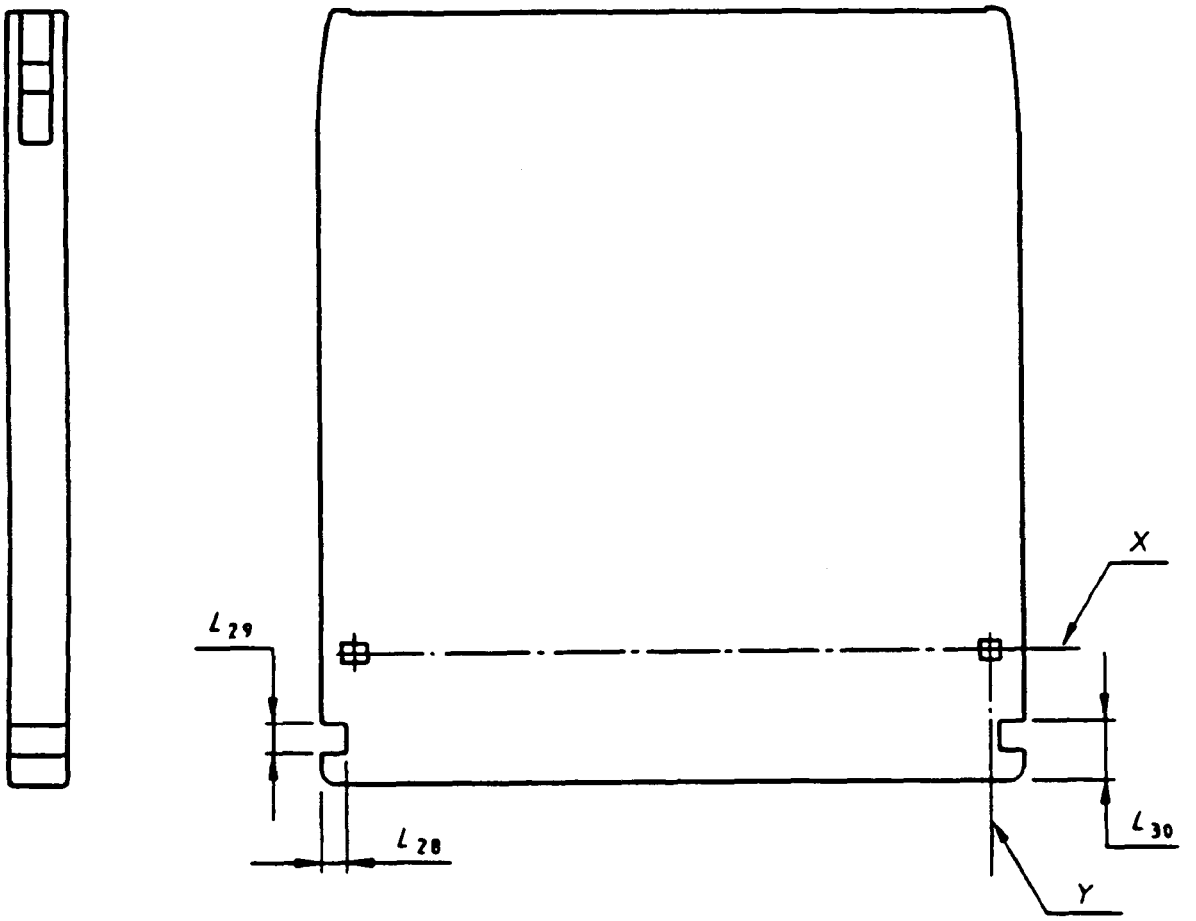


**Figure 7 - Gripper slots**



Copyright International Organization for Standardization
Provided by IHS under license with ISO
No reproduction or networking permitted without license from IHS
Not for Resale

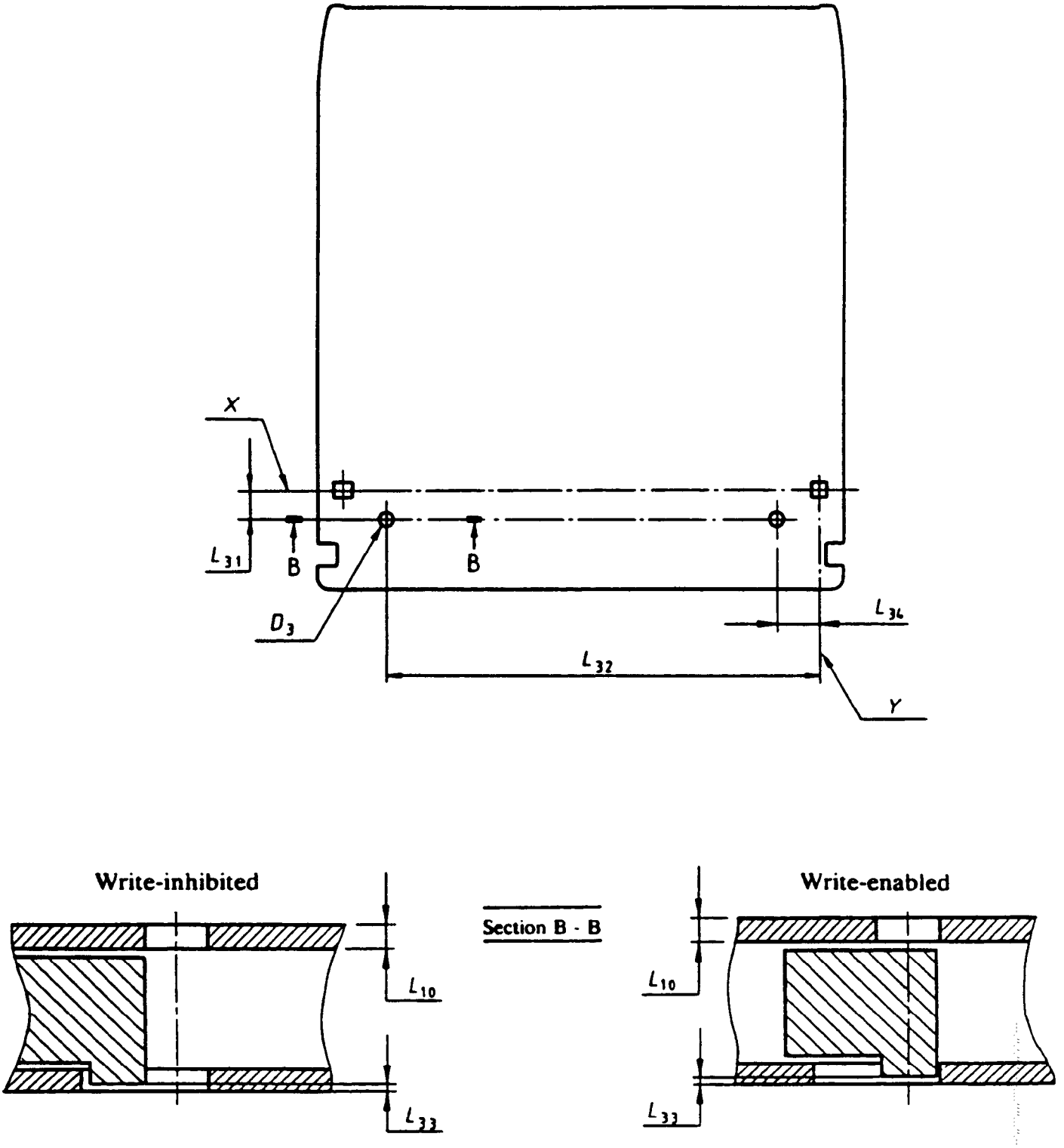


**Figure 8 - Write-inhibit holes**



Copyright International Organization for Standardization
Provided by IHS under license with ISO
No reproduction or networking permitted without license from IHS
Not for Resale

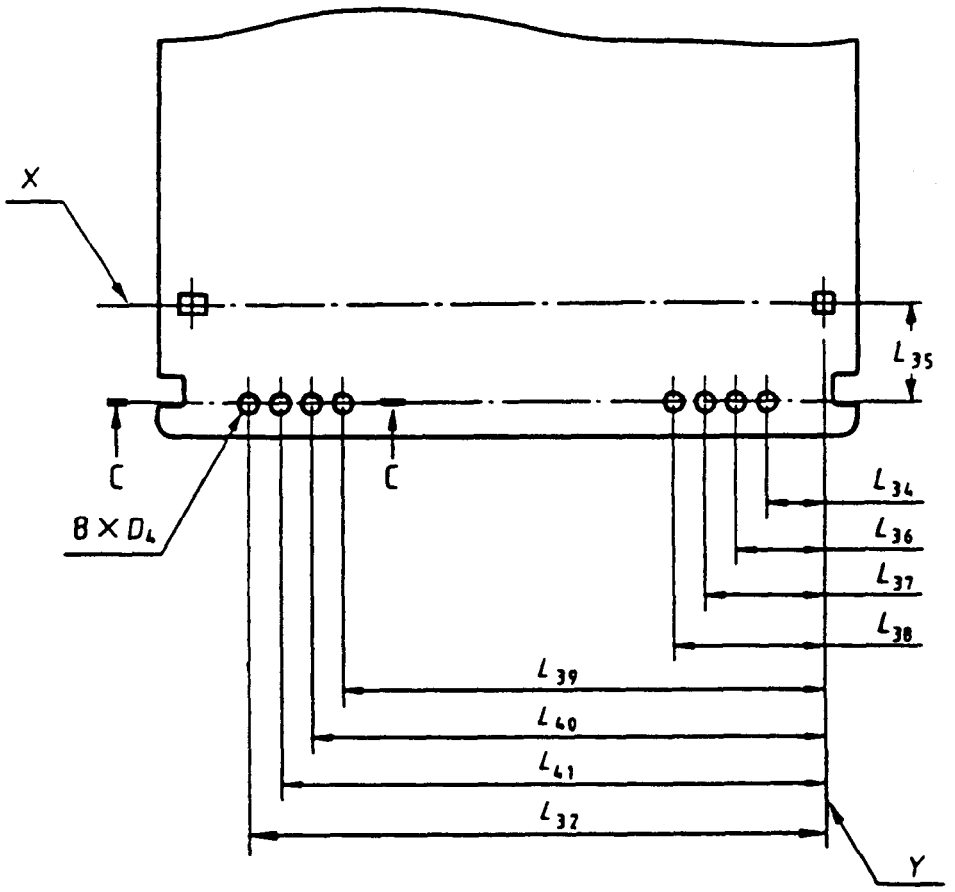


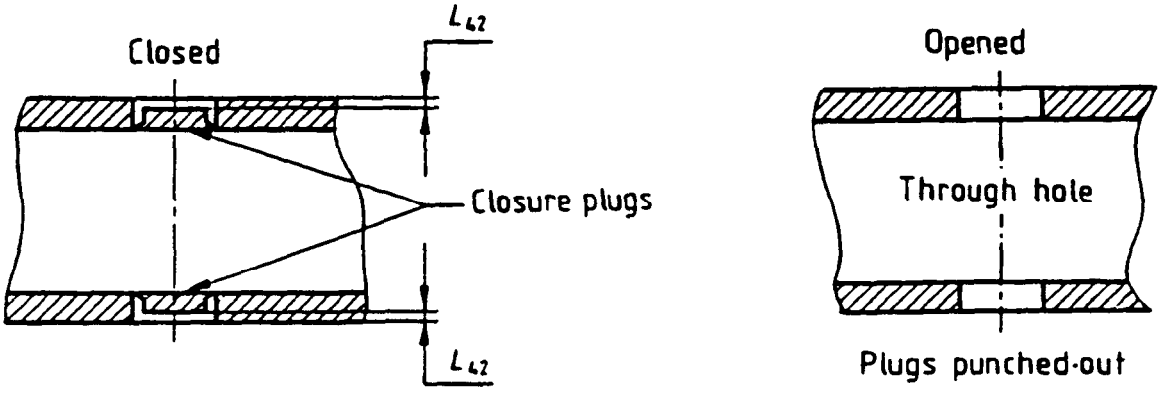


Typical sensor hole section C - C

**Figure 9 - Media ID sensor holes**



Copyright International Organization for Standardization
Provided by IHS under license with ISO
No reproduction or networking permitted without license from IHS
Not for Resale

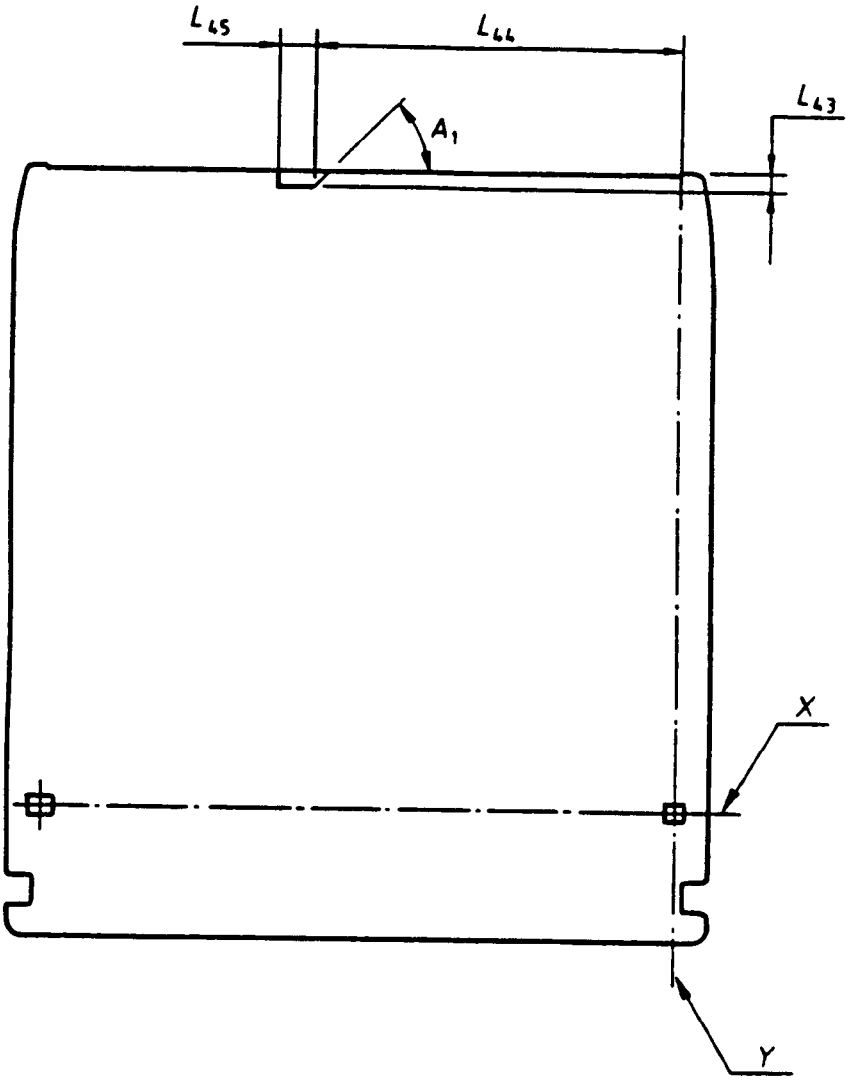


**Figure 10 - Shutter sensor notch viewed from Side A**



Copyright International Organization for Standardization
Provided by IHS under license with ISO
No reproduction or networking permitted without license from IHS
Not for Resale

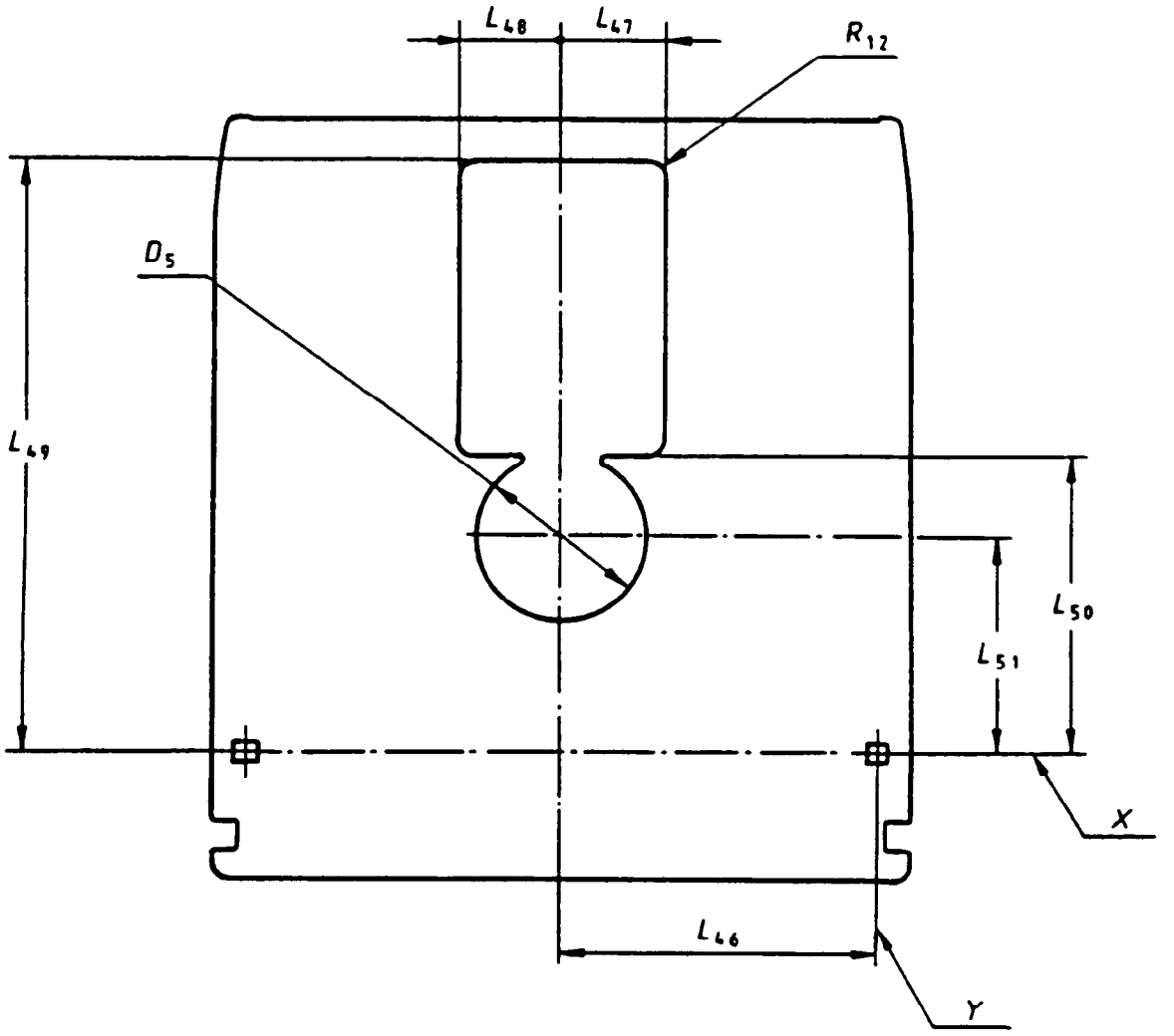


**Figure 11 - Head and motor window**



Copyright International Organization for Standardization
Provided by IHS under license with ISO
No reproduction or networking permitted without license from IHS
Not for Resale

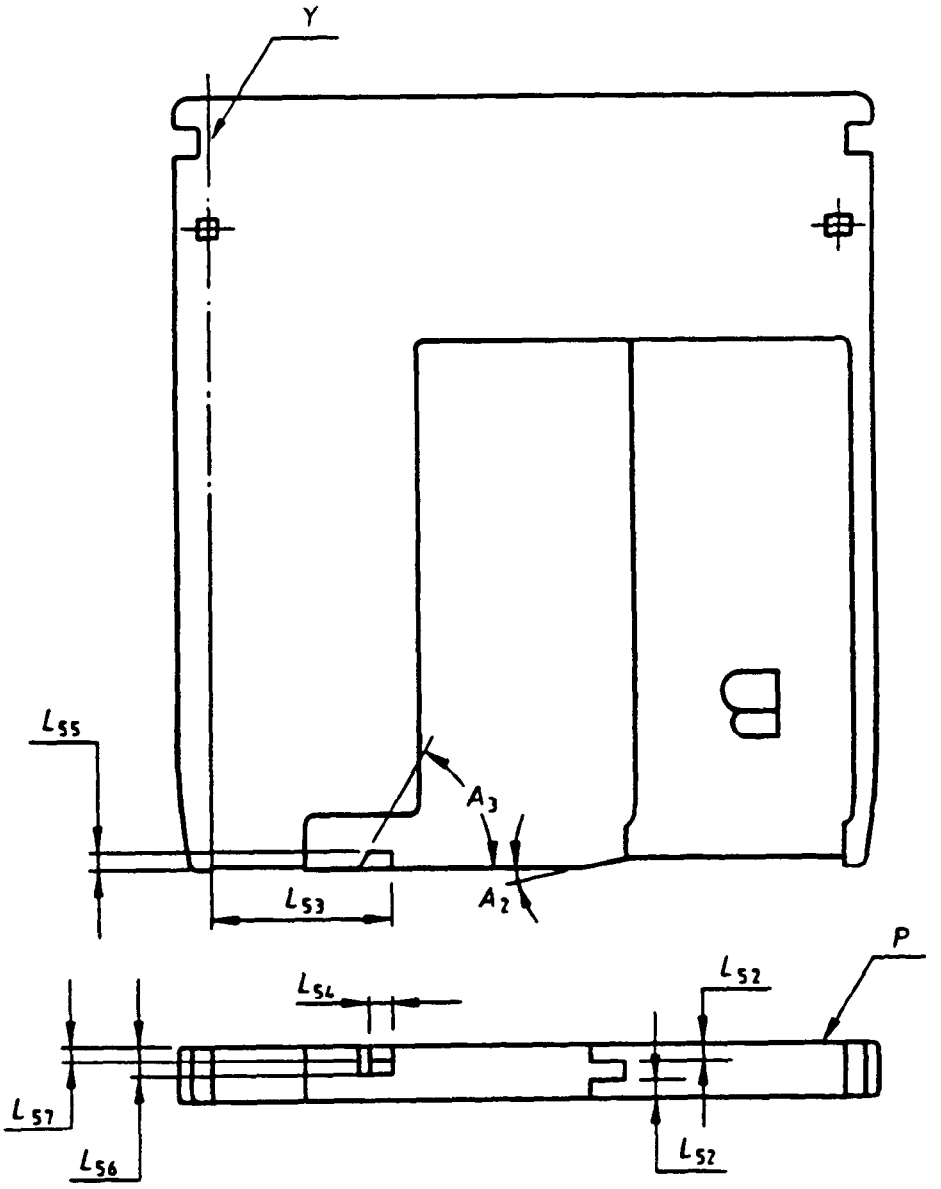


**Figure 12 - Shutter opening feature**

Copyright International Organization for Standardization
Provided by IHS under license with ISO
No reproduction or networking permitted without license from IHS
Not for Resale

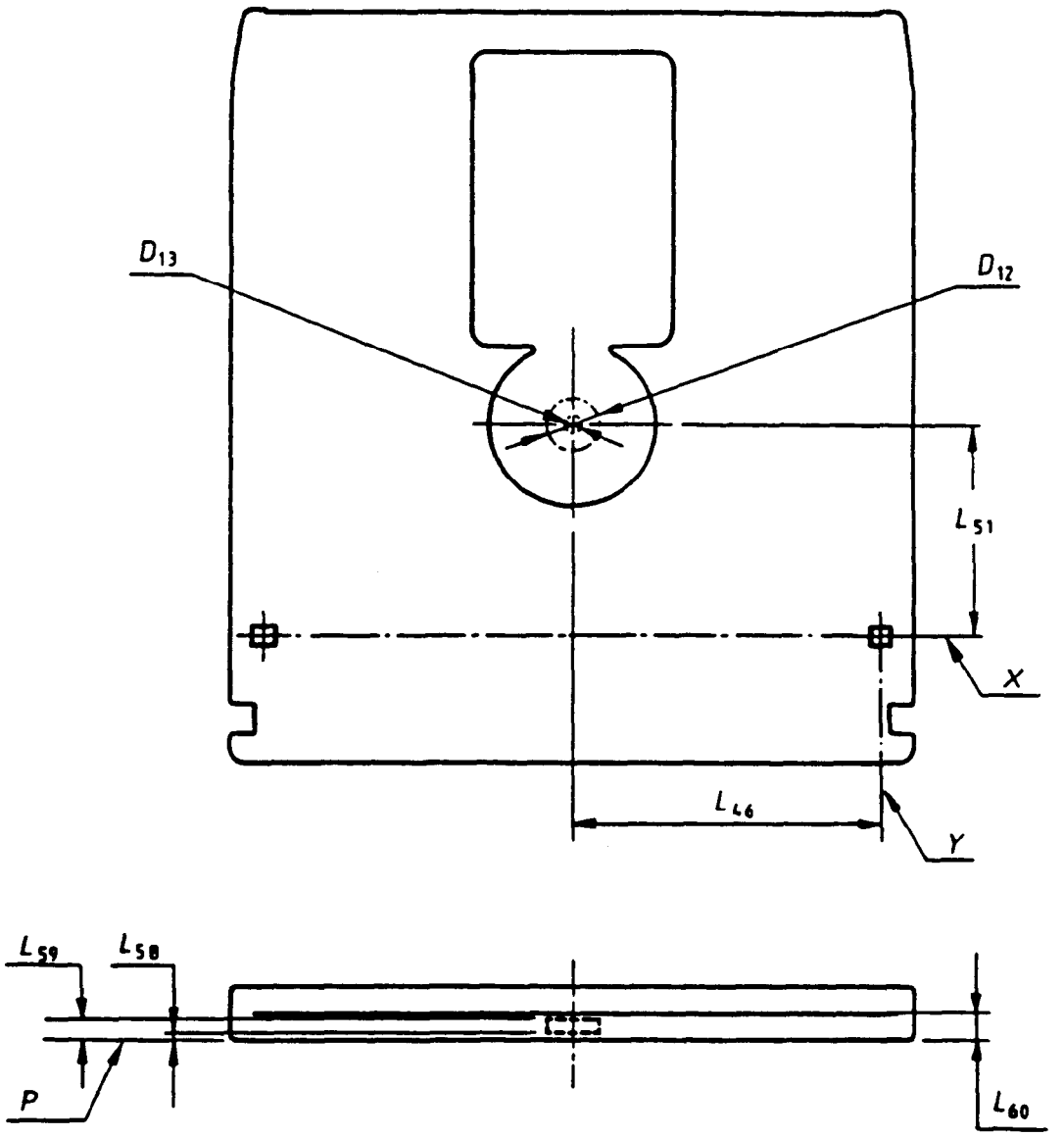


**Figure 13 - Capture cylinder for the hub**



Copyright International Organization for Standardization
Provided by IHS under license with ISO
No reproduction or networking permitted without license from IHS
Not for Resale

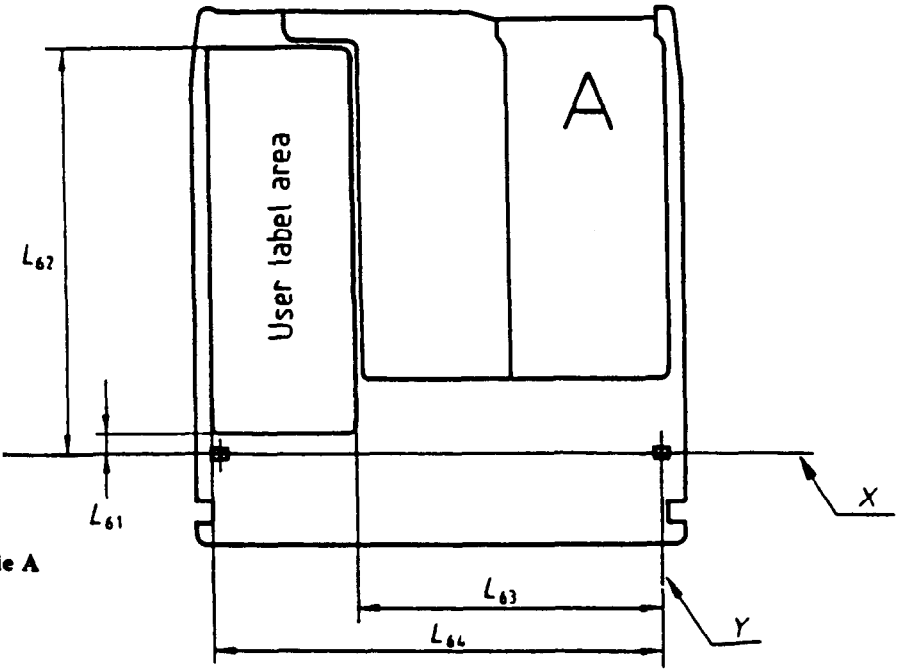


**Figure 14.a - User label area on Side A**

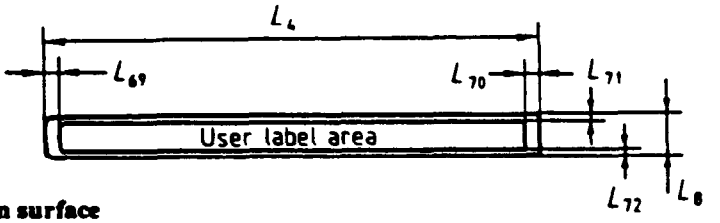


**Figure 14.b - User label area on bottom surface**

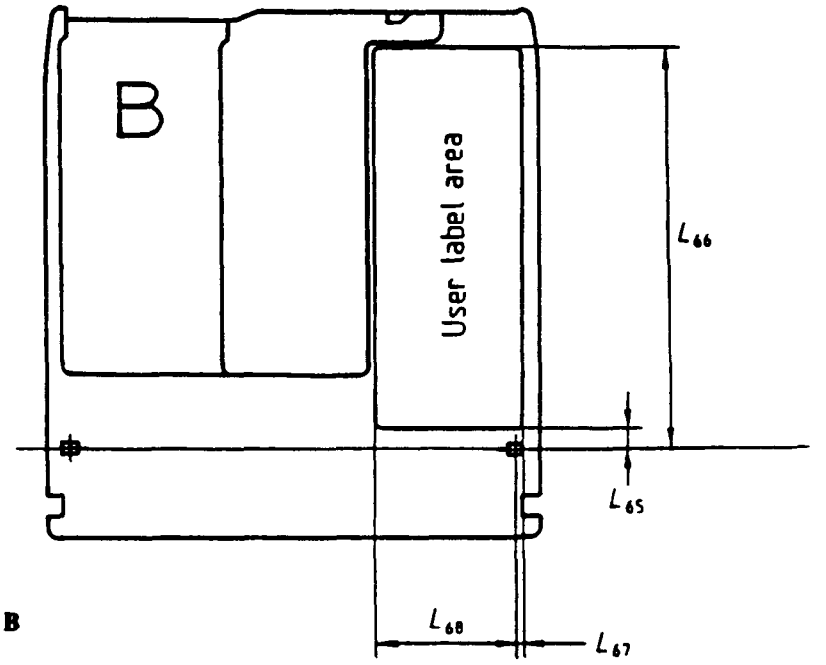


**Figure 14.c - User label area on Side B**

**Figure 14 - User label area**

Copyright International Organization for Standardization
Provided by IHS under license with ISO
No reproduction or networking permitted without license from IHS
Not for Resale

## 14 Characteristics of the substrate

### 14.1 Index of refraction

Within the Formatted Zone (see 16.1) the index of refraction of the substrate shall be within the range from 1,46 to 1,60.

### 14.2 Thickness

The thickness of the substrate within the Formatted Zone shall be:

$$0,5093 \times \frac{n^3}{n^2-1} \times \frac{n^2+0,2650}{n^2+0,5929} \text{ mm} \pm 0,05 \text{ mm}$$

where $n$ is the index of refraction.

## Section 3 - Format of information

## 15 Track geometry

### 15.1 Track shape

Each track shall form a 360° turn of a continuous spiral.

### 15.2 Direction of rotation

The disk shall rotate counter-clockwise as viewed by the objective lens. The tracks shall spiral outwards.

### 15.3 Track pitch

Except in the Control Track PEP Zone, the track pitch shall be 1,5 µm. Track to tack variations shall not exceed ± 0,04 µm. Cumulative average over 100 tracks shall not exceed 0,01 µm.

### 15.4 Track number

Each track shall be identified by a track number. Track 0 shall be located at radius 30,00 mm ± 0,10 mm. The track numbers of tracks located at radii larger than that of track 0 shall be increased by 1 for each track. The track numbers of tracks located at radii smaller than that of track 0 shall be negative and decrease by 1 for each track. Track-1 is indicated by (FF)(FF).

## 16 Track format

### 16.1 Formatted Zone

The Formatted Zone shall extend from radius 27,00 mm to radius 61,00 mm and shall be divided as follows. Dimensions are given as reference only, and are nominal locations.

| | |
|---|---|
| Reflective Zone | 27,00 mm to 29,00 mm |
| Control Track PEP Zone | 29,00 mm to 29,50 mm |
| Transition Zone For SFP | 29,50 mm to 29,52 mm |
| Inner Control Track SFP Zone | 29,52 mm to 29,70 mm |
| Inner Manufacturer Zone | 29,70 mm to 29,95 mm |
| DMA Zone | 29,95 mm to 30,00 mm |
| User Zone | 30,00 mm to 60,00 mm |
| Outer Manufacturer Zone | 60,00 mm to 60,15 mm |
| Outer Control Track SFP Zone | 60,15 mm to 60,50 mm |



--`,,```,,,,````-`-`,,`,,`,`,,`---
Copyright International Organization for Standardization
Provided by IHS under license with ISO
No reproduction or networking permitted without license from IHS
Not for Resale

| | |
|---|---|
| Lead-Out Zone | 60,50 mm to 61,00 mm |

This International Standard does not specify the format of the Reflective Zone, except that it shall have the same recording layer as the remainder of the Formatted Zone.

The Transition Zone For SFP is an area in which the format changes from the Control Track PEP Zone without servo information to a zone including servo information.

The Inner Control SFP shall extent from radius 29,52 mm to 29,70 mm. A track in the Inner Control Track SFP Zone shall contain the same amount of sectors as the first track in the User Zone.

The Inner Manufacturer Zone is provided to allow the media manufacturer to perform tests on the disk, including write operations, in an area located away from recorded information.

DMA Zone is used to store defect management information. In this zone, the information in the tracks from track -9 to track -2 is used for defect management. No other Track in the DMA zone is not used. A track in the DMA Zone shall contain the same amount of sectors as the first track in the User Zone.

The User Zone shall start with track 0 and end with track *N*. *N* being either track 20 009 or 20 010. Disks with sector sizes of 512 bytes have 20 010 user tracks, disk with 1 024 byte sectors have 20 009 user tracks.

The User Zone shall divided into either 17 or 30 zones. Disks with 512 byte sectors shall have 30 zones, disks with 1 024 byte sectors shall have 17 zones. Each band shall contain the same number of tracks. Disks with 512 byte sectors shall contain 667 tracks per zone, disks with 1 024 byte sectors shall contain 1 177 tracks per 17 zone.

The zone located at radius 30 mm shall be called zone 0. A track in zone 0 shall contain 17 sectors for disks with 1 024 byte sectors and 31 sectors for disks with 512 byte sectors. To accommodate zone boundary conditions, the first and the last track of each zone is not used. This allows for switching of data rates between zones.

For disks of Type WO, the User Zone shall be used according to 19.1 and 19.2 of this International Standard.



Copyright International Organization for Standardization
Provided by IHS under license with ISO
No reproduction or networking permitted without license from IHS
Not for Resale

**Table 1 - Layout of the User Zone for disks with 512-byte sectors**

| Zone number | Tracks/ Zone | Sectors/ Track | First Track in Zone | Data rate Mbits/s (1 800 rpm) |
|---|---|---|---|---|
| 0 | 667 | 31 | 0 | 5,55 |
| 1 | 667 | 32 | 667 | 5,73 |
| 2 | 667 | 33 | 1 334 | 5,91 |
| 3 | 667 | 34 | 2 001 | 6,09 |
| 4 | 667 | 35 | 2 668 | 6,27 |
| 5 | 667 | 36 | 3 335 | 6,45 |
| 6 | 667 | 37 | 4 002 | 6,62 |
| 7 | 667 | 38 | 4 669 | 6,80 |
| 8 | 667 | 39 | 5 336 | 6,98 |
| 9 | 667 | 40 | 6 003 | 7,16 |
| 10 | 667 | 41 | 6 670 | 7,34 |
| 11 | 667 | 42 | 7 337 | 7,52 |
| 12 | 667 | 43 | 8 004 | 7,70 |
| 13 | 667 | 44 | 8 671 | 7,88 |
| 14 | 667 | 45 | 9 338 | 8,06 |
| 15 | 667 | 46 | 10 005 | 8,24 |
| 16 | 667 | 47 | 10 672 | 8,41 |
| 17 | 667 | 48 | 11 339 | 8,59 |
| 18 | 667 | 49 | 12 006 | 8,77 |
| 19 | 667 | 50 | 12 673 | 8,95 |
| 20 | 667 | 51 | 13 340 | 9,13 |
| 21 | 667 | 52 | 14 007 | 9,31 |
| 22 | 667 | 53 | 14 674 | 9,49 |
| 23 | 667 | 54 | 15 341 | 9,67 |
| 24 | 667 | 55 | 16 008 | 9,85 |
| 25 | 667 | 56 | 16 675 | 10,03 |
| 26 | 667 | 57 | 17 342 | 10,21 |
| 27 | 667 | 58 | 18 009 | 10,38 |
| 28 | 667 | 59 | 18 676 | 10,56 |
| 29 | 667 | 60 | 19 343 | 10,74 |



Copyright International Organization for Standardization
Provided by IHS under license with ISO
No reproduction or networking permitted without license from IHS
Not for Resale

**Table 2 - Layout of the User Zone for disks with 1 024-byte sectors**

| Zone number | Tracks/ Zone | Sectors/ Track | First Track in Zone | Data rate Mbits/s (1 800 rpm) |
|---|---|---|---|---|
| 0 | 1 177 | 17 | 0 | 5,55 |
| 1 | 1 177 | 18 | 1 177 | 5,88 |
| 2 | 1 177 | 19 | 2 354 | 6,20 |
| 3 | 1 177 | 20 | 3 531 | 6,53 |
| 4 | 1 177 | 21 | 4 708 | 6,85 |
| 5 | 1 177 | 22 | 5 885 | 7,18 |
| 6 | 1 177 | 23 | 7 062 | 7,51 |
| 7 | 1 177 | 24 | 8 239 | 7,83 |
| 8 | 1 177 | 25 | 9 416 | 8,16 |
| 9 | 1 177 | 26 | 10 593 | 8,49 |
| 10 | 1 177 | 27 | 11 770 | 8,81 |
| 11 | 1 177 | 28 | 12 947 | 9,14 |
| 12 | 1 177 | 29 | 14 124 | 9,47 |
| 13 | 1 177 | 30 | 15 301 | 9,79 |
| 14 | 1 177 | 31 | 16 478 | 10,12 |
| 15 | 1 177 | 32 | 17 655 | 10,44 |
| 16 | 1 177 | 33 | 18 832 | 10,77 |

The Outer Manufacturer Zone shall comprise 95 tracks and shall begin one track after the last user track (track $N$, see bytes 384, 385 of the SFP Zone). Tracks ($N$+9) to ($N$+95) are reserved for testing by the manufacturer. A track in the Outer Manufacturer Zone shall contain the same amount of sectors as the last track in the User Zone.

The Outer Control Track SFP Zone shall begin at track $N$+96 (see bytes 8, 9 in the PEP Zone) and shall continue up to radius 60,50 mm. A track in the Outer Control Track SFP Zone shall contain the same amount of sectors as the last track in the User Zone.

The Lead-Out Zone shall be used positioning purposes only.

From radius 29,52 mm to radius 61,00 mm the Formatted Zone shall be provided with tracks containing servo and address information.

### 16.2 Control tracks

The three zones

- Control Track PEP Zone
- Inner Control Track SFP Zone
- Outer Control Track SFP Zone

shall be used for recording control track information.

The control track information shall be recorded in two different formats, the first format in the Control Track PEP Zone, and the second in the Inner and Outer Control Track SFP Zones.

The Control Track PEP Zone shall be recorded using low frequency phase-encoded modulation.

The Inner and Outer Control Track SFP Zones shall each consist of a band of tracks recorded by the same modulation method and format as is used in the User Zone.



Copyright International Organization for Standardization
Provided by IHS under license with ISO
No reproduction or networking permitted without license from IHS
Not for Resale

### 16.3 Control Track PEP Zone

This zone shall not contain any servo information. All information in it shall be pre-recorded in phase-encoded modulation. The marks in all tracks of the PEP Zone shall be radially aligned, so as to allow information recovery from this zone without radial tracking being established by the drive.

#### 16.3.1 Recording in the PEP Zone

In the PEP Zone there shall be 561 to 567 PEP bit cells per revolution. A PEP bit cell shall be 656 ± 1 Channel bits long. A PEP bit is recorded by writing marks in either the first or the second half of the cell.

A mark shall be nominally two Channel bits long and shall be separated from adjacent marks by a space of nominally two Channel bits.

A ZERO shall be represented by a change from marks to no marks at the centre of the cell and a ONE by a change from no marks to marks at this centre.

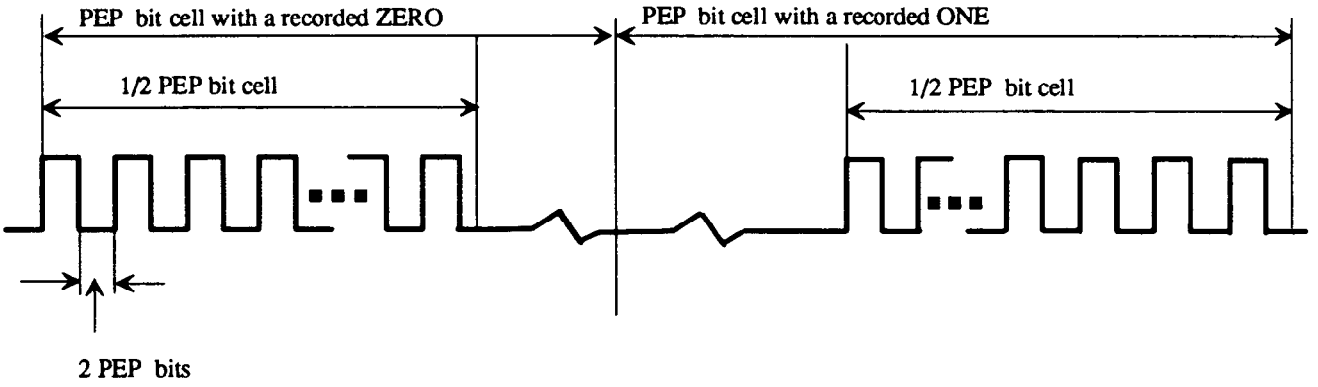


**Figure 15 - Example of phase-encoded modulation in the PEP Zone**

#### 16.3.2 Cross-track loss

The density of tracks and the shape of marks in the PEP Zone shall be such that the cross-track loss meets the requirement

$$\left(\frac{I_{m\max}}{I_{m\min}}\right) < 2,0$$

The signal $I$ is obtained from Channel 1 (see clause 9). The signal $I_m$ is the maximum amplitude in a group of three successive marks. $I_{mmax}$ is the maximum value and $I_{mmin}$ is the minimum value of $I_m$ obtained over one revolution. $I_{mmax}$ shall be greater than 0,4 $I_o$, where $I_o$ is the signal obtained from Channel 1 in an unrecorded ungrooved area. The effect of defects shall be ignored.



Copyright International Organization for Standardization
Provided by IHS under license with ISO
No reproduction or networking permitted without license from IHS
Not for Resale

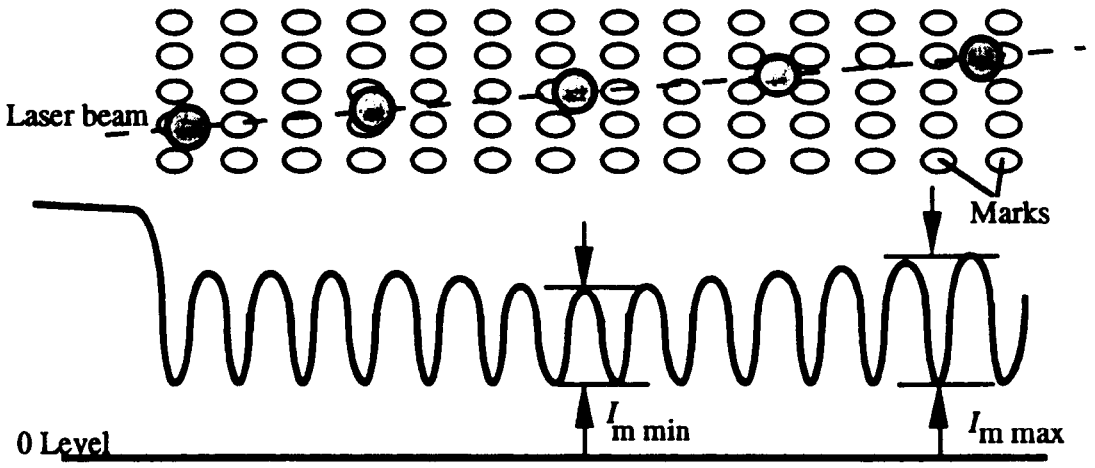


**Figure 16 - Path of the laser beam when crossing tracks and the resulting PEP signals**

### 16.3.3 Format of the tracks of the PEP Zone

Each track in the PEP Zone shall have three sectors as shown in figure 17. The numbers below the fields indicate the number of PEP bits in each field.

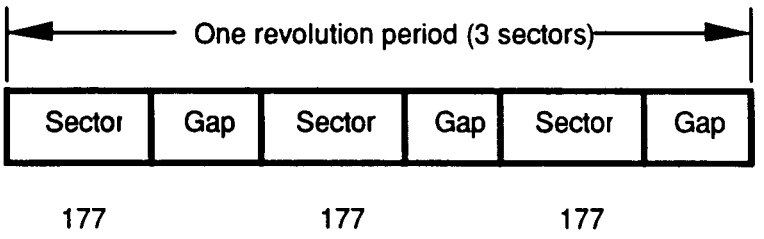


**Figure 17 - Track format in the PEP Zone**

The gaps between sectors shall be unrecorded areas having a length corresponding to 10 to 12 PEP bits.

#### 16.3.3.1 Format of a sector

Each sector of 177 PEP bits shall have the following layout.

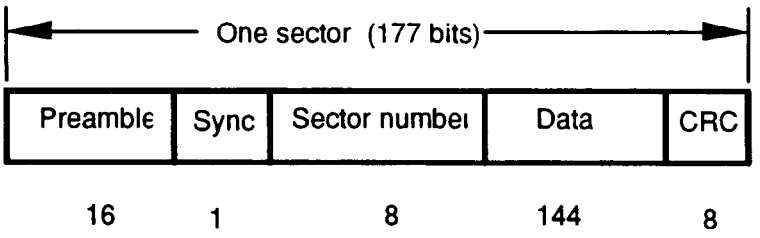


**Figure 18 - Sector format in the PEP Zone**

##### 16.3.3.1.1 Preamble field

This field shall consist of 16 ZERO bits.

##### 16.3.3.1.2 Sync field

This field shall consist of 1 ONE bit.



Copyright International Organization for Standardization
Provided by IHS under license with ISO
No reproduction or networking permitted without license from IHS
Not for Resale

#### 16.3.3.1.3 Sector Number field

This field shall consist of eight bits specifying in binary notation the sector number from 0 to 2.

#### 16.3.3.1.4 Data field

This field shall comprise 18 8-bit bytes numbered 0 to 17. These bytes shall specify the following.

**Byte 0**

bit 7 shall always be set to ZERO

bits 6 to 4 shall be set to 010 indicating Zoned Constant Angular Velocity (ZCAV)

Other settings of these bits are prohibited by this International Standard (see also annex C).

bit 3 shall be set to ZERO

bits 2 to 0 shall always be set to 000 indicating RLL (2,7) mark position modulation.

Other settings of these bits are prohibited by this International Standard.

**Byte 1**

bit 7 shall be set to ZERO

bits 6 to 4 specify the error correction code:

when set to 000 shall mean R-S LDC degree 16, and 10 interleaves,
when set to 001 shall mean R-S LDC degree 16, and 5 interleaves.

Other settings of these bits are prohibited by this International Standard.

bit 3 shall be set to ZERO

bits 2 to 0 these bits shall specify in binary notation the power $n$ of 2 in the following formula which expresses the number of user bytes per sector

$$256 \times 2^n$$

Values of $n$ other than 1 or 2 are prohibited by this International Standard.

**Byte 2**

This byte shall specify in binary notation the number of sectors in track 0.

**Byte 3**

This byte shall give the manufacturer's specification for the baseline reflectance $R$ of the disk when measured at a nominal wavelength of 780 nm. It is specified as a number $n$ between 10 and 34 such that

$$n = 100\,R$$

**Byte 4**

This byte shall specify that the recording is on-land and it shall indicate the signal amplitude of the pre-recorded marks.

bit 7 shall be set to ZERO to specify on-land recording.

The absolute value of the signal amplitude is given as a number $n$ between -20 and -50, such that $n = -50\,(I_p / I_o)$

where $I_p$ is the signal from Channel 1 from the low frequency pre-recorded marks and $I_o$ is the signal from an unrecorded, ungrooved area.

bits 6 to 0 shall express this number $n$. Bit 6 shall be set to ONE to indicate that this number is negative and expressed by bits 5 to 0 in TWO's complement. Recording is high-to-low.

**Byte 5**

This byte shall be set either to (00) or to (FF).



Copyright International Organization for Standardization
Provided by IHS under license with ISO
No reproduction or networking permitted without license from IHS
Not for Resale

**Byte 6**

This byte shall specify in binary notation a number $n$ representing 20 times the maximum read power expressed in milliwatts which is permitted for reading the SFP Zone at a rotational frequency of 30 Hz and a wavelength of 780 nm. This number $n$ shall be between 0 and 40.

**Byte 7**

The byte shall specify the media type.

0010 0000 shall mean a rewritable optical disk cartridge according to this International Standard.

0001 0001 shall mean an optical disk cartridge with write-once functionality according to this International Standard.

Other settings of this byte are prohibited by this International Standard (see also annex C).

**Byte 8**

This byte shall specify the most significant byte of the track number of the track in which the Outer Control Track SFP Zone starts.

**Byte 9**

This byte shall specify the least significant byte of the track number in which the Outer Control Track SFP Zone starts.

**Bytes 10 to 13**

These bytes shall be set to (FF).

**Bytes 14 to 17**

The contents of these bytes are not specified by this International Standard, they may be used for a manufacturer's identification. They shall be ignored in interchange.

### 16.3.3.1.5 CRC

The eight bits of the CRC shall be computed over the Sector Number field and the Data field of the PEP sector.

The generator polynomial shall be

$$G(x) = x^8 + x^4 + x^3 + x^2 + 1$$

The residual polynomial R($x$) shall be

$$R(x) = \left( \sum_{i=144}^{i=151} \overline{a}_i x^i + \sum_{i=0}^{i=143} a_i x^i \right) x^8 \bmod G(x)$$

where $a_i$ denotes a bit of the input data and $\overline{a}_i$ an inverted bit. The highest order bit of the Sector Number field is $a_{151}$.

The eight bits $c_k$ of the CRC are defined by

$$R_c(x) = \sum_{k=0}^{k=7} c_k x^k$$

where $c_7$ is recorded as the highest order bit of the CRC byte of the PEP sector.



Copyright International Organization for Standardization
Provided by IHS under license with ISO
No reproduction or networking permitted without license from IHS
Not for Resale

#### 16.3.3.2 Summary of the format of the Data field of a sector

**Table 3 - Format of the Data field of a sector of the PEP Zone**

| Byte \ Bit | 7 | 6 | 5 | 4 | 3 | 2 | 1 | 0 |
|---|---|---|---|---|---|---|---|---|
| 0 | Format | ZCAV | | | 0 | Modulation Code | | |
| 1 | 0 | ECC Code | | | 0 | Number of User Bytes | | |
| 2 | Number of sectors on track 0 | | | | | | | |
| 3 | Base line reflectance at 780 nm | | | | | | | |
| 4 | L or G | Amplitude and polarity of pre-formatted data | | | | | | |
| 5 | (00) or (FF) | | | | | | | |
| 6 | Maximum read power for the SFP zone at 30 Hz and 780 nm | | | | | | | |
| 7 | Media Type | | | | | | | |
| 8 | Start track of outer SFP zone, MSB of track number | | | | | | | |
| 9 | Start track of outer SFP zone, LSB of track number | | | | | | | |
| 10 | (FF) | | | | | | | |
| 11 | (FF) | | | | | | | |
| 12 | (FF) | | | | | | | |
| 13 | (FF) | | | | | | | |
| 14 | Not specified, ignored in interchange | | | | | | | |
| 15 | Not specified, ignored in interchange | | | | | | | |
| 16 | Not specified, ignored in interchange | | | | | | | |
| 17 | Not specified, ignored in interchange | | | | | | | |

### 16.4 Control Track SFP Zones

The two Control Track SFP Zones shall be pre-recorded in the Standard User Data Format (see 17). The pre-recorded data marks shall satisfy the requirements for the VFO and ID signals specified in 20.2.2.

Each sector of the SFP Zones shall include 512 bytes of information numbered 0 to 511 and grouped in five sections, as follows

- a duplicate of the PEP information (18 bytes);
- media information (366 bytes);
- system information (64 bytes);
- bytes reserved for future standardization (32 bytes);
- contents not specified by this International Standard (32 bytes).

In the case of 1 024-byte sectors these first 512 bytes shall be followed by 512 (FF)-bytes.

The DMP bytes of each sector may not conform to this International Standard.

#### 16.4.1 Duplicate of the PEP information

Bytes 0 to 17 shall be identical with the 18 bytes of the Data field of a sector of the PEP Zone (see 16.3.3.1.4).



Copyright International Organization for Standardization
Provided by IHS under license with ISO
No reproduction or networking permitted without license from IHS
Not for Resale

## 16.5 Media information

Bytes 18 to 359 specify read and write parameters at three laser wavelengths $L_1$ = 825 nm, $L_2$ = 780 nm and $L_3$. For each wavelength the baseline reflectance $R_1$, $R_2$ or $R_3$ is specified. The read and write powers are specified for four different rotational frequencies $N_1$ = 30 Hz, $N_2$ = 40 Hz, $N_3$ and $N_4$ for each wavelength. For each value of $N$ four sets of write powers are given: three sets for constant pulse width and one set for constant power. Each set contains three values for the inner, middle and outer radius.

Bytes 18 to 27, bytes 31 to 34, bytes 44 to 47, bytes 132 to 141, bytes 145 to 147, bytes 158 to 161 and bytes 360 to 383 are mandatory. They shall specify the conditions for

$L_1$ = 825 nm and $N_1$ = 30 Hz and

$L_2$ = 780 nm and $N_1$ = 30 Hz

Bytes 35 to 40 are optional, they shall either contain the information specified or be set to (FF).

Bytes 28 to 30, bytes 41 to 43, bytes 48 to 131, bytes 142 to 144, bytes 148 to 157 and bytes 162 to 359 are optional. They shall either specify the information indicated or be set to (FF).

All values specified in bytes 18 to 359 shall be such that the requirements of clauses 14 and 15 are met.

**Byte 18**

This byte shall specify the wavelength $L_1$ in nanometres as a number $n$ between 0 and 255 such that

$$n = 1/5\, L_1$$

This byte shall be set to $n$ = 165 for ODCs according to this International Standard.

**Byte 19**

This byte shall specify the baseline reflectance $R_1$ at wavelength $L_1$ as a number $n$ between 10 and 34 such that

$$n = 100\, R_1$$

**Byte 20**

This byte shall specify the rotational frequency $N_1$ in hertz as a number $n$ such that

$$n = N_1$$

This byte shall be set to $n$ = 30 for ODCs according to this International Standard.

**Byte 21**

This byte shall specify the maximum read power $P_1$, in milliwatts, for the User Zone as a number $n$ between 0 and 40 such that

$$n = 20\, P_1$$

The following bytes 22 to 30 specify, at constant pulse width, the write power $P_w$ in milliwatts indicated by the manufacturer of the disk. $P_w$ is expressed as a number $n$ between 0 and 255 such that

$$n = 5\, P_w$$

In these bytes $T'$ stands for the constant pulse width, $T$ for the time length of one Channel bit and $r$ for the radius considered.

**Byte 22**

This byte shall specify $P_w$ for

$T' = T$ x 1,00

$r$ = 30 mm

**Byte 23**

This byte shall specify $P_w$ for

$T' = T$ x 1,00



Copyright International Organization for Standardization
Provided by IHS under license with ISO
No reproduction or networking permitted without license from IHS
Not for Resale

$r$ = 45 mm

**Byte 24**

This byte shall specify $P_w$ for

$T' = T \times 1{,}00$

$r$ = 60 mm

**Byte 25**

This byte shall specify $P_w$ for

$T' = T$ x 0,50

$r$ = 30 mm

**Byte 26**

This byte shall specify $P_w$ for

$T' = T$ x 0,50

$r$ = 45 mm

**Byte 27**

This byte shall specify $P_w$ for

$T' = T$ x 0,50

$r$ = 60 mm

**Byte 28**

This byte shall specify $P_w$ for

$T' = T$ x 0,25

$r$ = 30 mm

**Byte 29**

This byte shall specify $P_w$ for

$T' = T$ x 0,25

$r$ = 45 mm

**Byte 30**

This byte shall specify $P_W$ for

$T' = T$ x 0,25

$r$ = 60 mm

**Byte 31**

This byte shall specify a constant write power $P_w$, in milliwatts, as a number $n$ between 0 and 255 such that

$n = 5P_w$

**Byte 32**

This byte shall specify the write pulse width $T_p$, in nanoseconds, expressed by a number $n$ between 0 and 255 such that

$n = T_p$

for the constant write power specified by byte 31 and at a radius $r$ = 30 mm.

**Byte 33**

This byte shall specify the write pulse width $T_p$, in nanoseconds, expressed by a number $n$ between 0 and 255 such that



Copyright International Organization for Standardization
Provided by IHS under license with ISO
No reproduction or networking permitted without license from IHS
Not for Resale

$$n = T_p$$

for the constant write power specified by byte 31 and at a radius $r = 45$ mm.

**Byte 34**

This byte shall specify the write pulse width $T_p$, in nanoseconds, expressed by a number $n$ between 0 and 255 such that

$$n = T_p$$

for the constant write power specified by byte 31 and at a radius $r = 60$ mm.

The following bytes 35 to 43 specify, at constant pulse width, the erase power $P_E$ in milliwatts indicated by the manufacturer of the disk. $P_E$ is expressed as a number $n$ between 0 and 255 such that

$$n = 5\ P_E$$

**Byte 35**

This byte shall specify $P_E$ for

$T' = T$ x 1,00

$r = 30$ mm

**Byte 36**

This byte shall specify $P_E$ for

$T' = T$ x 1,00

$r = 45$ mm

**Byte 37**

This byte shall specify $P_E$ for

$T' = T$ x 1,00

$r = 60$ mm

**Byte 38**

This byte shall specify $P_E$ for

$T' = T$ x 0,50

$r = 30$ mm

**Byte 39**

This byte shall specify $P_E$ for

$T' = T$ x 0,50

$r = 45$ mm

**Byte 40**

This byte shall specify $P_E$ for

$T' = T$ x 0,50

$r = 60$ mm

**Byte 41**

This byte shall specify $P_E$ for

$T' = T$ x 0,25

$r = 30$ mm



Copyright International Organization for Standardization
Provided by IHS under license with ISO
No reproduction or networking permitted without license from IHS
Not for Resale

**Byte 42**

This byte shall specify $P_E$ for

$T' = T \times 0{,}25$

$r = 45$ mm

**Byte 43**

This byte shall specify $P_E$ for

$T' = T \times 0{,}25$

$r = 60$ mm

**Byte 44**

This byte shall specify the erase power expressed as a number $n$ equal to five times its value in milliwatts. If the value of byte 44 equals 0, then bytes 45 to 47 below specify in the same manner the erase power for a d.c. erase instead of the erase pulse width. The erase pulse width is an absolute unsigned number expressed in nanoseconds.

**Byte 45**

Erase pulse width/power

$EP, r = 30$ mm

**Byte 46**

Erase pulse width/power

$EP, r = 45$ mm

**Byte 47**

Erase pulse width/power

$EP, r = 60$ mm

**Byte 48**

This byte shall specify, at wavelength $L_1$, the rotational frequency $N_2$ in hertz as a number $n$ between 0 and 255 such that

$n = N_2$

If this byte is not set to (FF), $n$ shall be set to 40 for ODCs according to this International Standard.

**Byte 49**

This byte shall specify the maximum read power $P_2$, in milliwatts, for the User Zone as a number $n$ between 0 and 255 such that

$n = 20\,P_2$

**Bytes 50 to 62**

For the values specified in bytes 18, 19, 48 and 49, bytes 50 to 62 shall specify the parameters indicated in bytes 22 to 34.

**Bytes 63 to 75**

For the values specified in bytes 18, 19, 48 and 49, bytes 63 to 75 shall specify the parameters indicated in bytes 35 to 47.

**Byte 76**

This byte shall specify, at wavelength $L_1$, rotational frequency $N_3$, in hertz, expressed as a number $n$ between 0 and 255 such that

$n = N_3$



Copyright International Organization for Standardization
Provided by IHS under license with ISO
No reproduction or networking permitted without license from IHS
Not for Resale

**Byte 77**

This byte shall specify the maximum read power $P_3$, in milliwatts, for the User Zone, as a number $n$ between 0 and 255 such that

$$n = 20 P_3$$

**Bytes 78 to 90**

For the values specified in bytes 18, 19, 76 and 77, bytes 78 to 90 shall specify the parameters indicated in bytes 22 to 34.

**Bytes 91 to 103**

For the values specified in bytes 18, 19, 76 and 77, bytes 91 to 103 shall specify the parameters indicated in bytes 35 to 47.

**Byte 104**

This byte shall specify, at wavelength $L_1$, rotational frequency $N_4$, in hertz, as a number $n$ between 0 and 255 such that

$$n = N_4$$

**Byte 105**

This byte shall specify the maximum read power $P_4$, in milliwatts, for the User Zone as a number $n$ between 0 and 255 such that

$$n = 20 P_4$$

**Bytes 106 to 118**

For the values specified in bytes 18, 19, 104 and 105, bytes 106 to 118 shall specify the parameters indicated in bytes 22 to 34.

**Bytes 119 to 131**

For the values specified in bytes 18, 19, 104 and 105, bytes 119 to 131 shall specify the parameters indicated in bytes 35 to 47.

**Byte 132**

This byte shall specify wavelength $L_2$, in nanometres, as a number $n$ between 0 and 255 such that

$$n = 1/5 L_2$$

If this byte is not set to (FF), n shall be set to 156 for ODCs according to this International Standard. This value indicates that the actual wavelength equals 780 nm ± 15 nm.

**Byte 133**

This byte shall specify the baseline reflectance $R_2$ at wavelength $L_2$ as a number $n$ between 0 and 100 such that

$$n = 100 R_2$$

**Bytes 134 to 245**

The allocation of information to, or the setting of, these bytes shall correspond to those of bytes 20 to 131. The values specified shall be for $L_2$ (byte 132) and $R_2$ (byte 133).

**Byte 246**

This byte shall specify wavelength $L_3$, in nanometres, as a number $n$ between 0 and 255 such that

$$n = 1/5 L_3$$

**Byte 247**

This byte shall specify the baseline reflectance $R_3$ at wavelength $L_3$ as a number $n$ between 0 and 100 such that

$$n = 100 R_3$$



Copyright International Organization for Standardization
Provided by IHS under license with ISO
No reproduction or networking permitted without license from IHS
Not for Resale

**Bytes 248 to 359**

The allocation of information to, or the setting of, these bytes shall correspond to those of bytes 20 to 131. The values specified shall be for $L_3$ (byte 246) and $R_3$ (byte 247).

**Bytes 360 to 363**

These bytes shall be set to (FF).

(See also annex C).

**Byte 364**

This byte shall specify the polarity of the figure of merit. When set to (00) it shall mean that this polarity is positive (the direction of Kerr rotation due to the written mark is clockwise).

When set to (01) it shall mean that this polarity is negative.

**Byte 365**

This byte shall specify the figure of merit $F$ as a number $n$ between 17 and 52, such that

$$n = 10\,000\,F$$

**Bytes 366 to 383**

These bytes shall be set to (FF). (See also annex C)



Copyright International Organization for Standardization
Provided by IHS under license with ISO
No reproduction or networking permitted without license from IHS
Not for Resale

**Table 4 - Summary of media information**

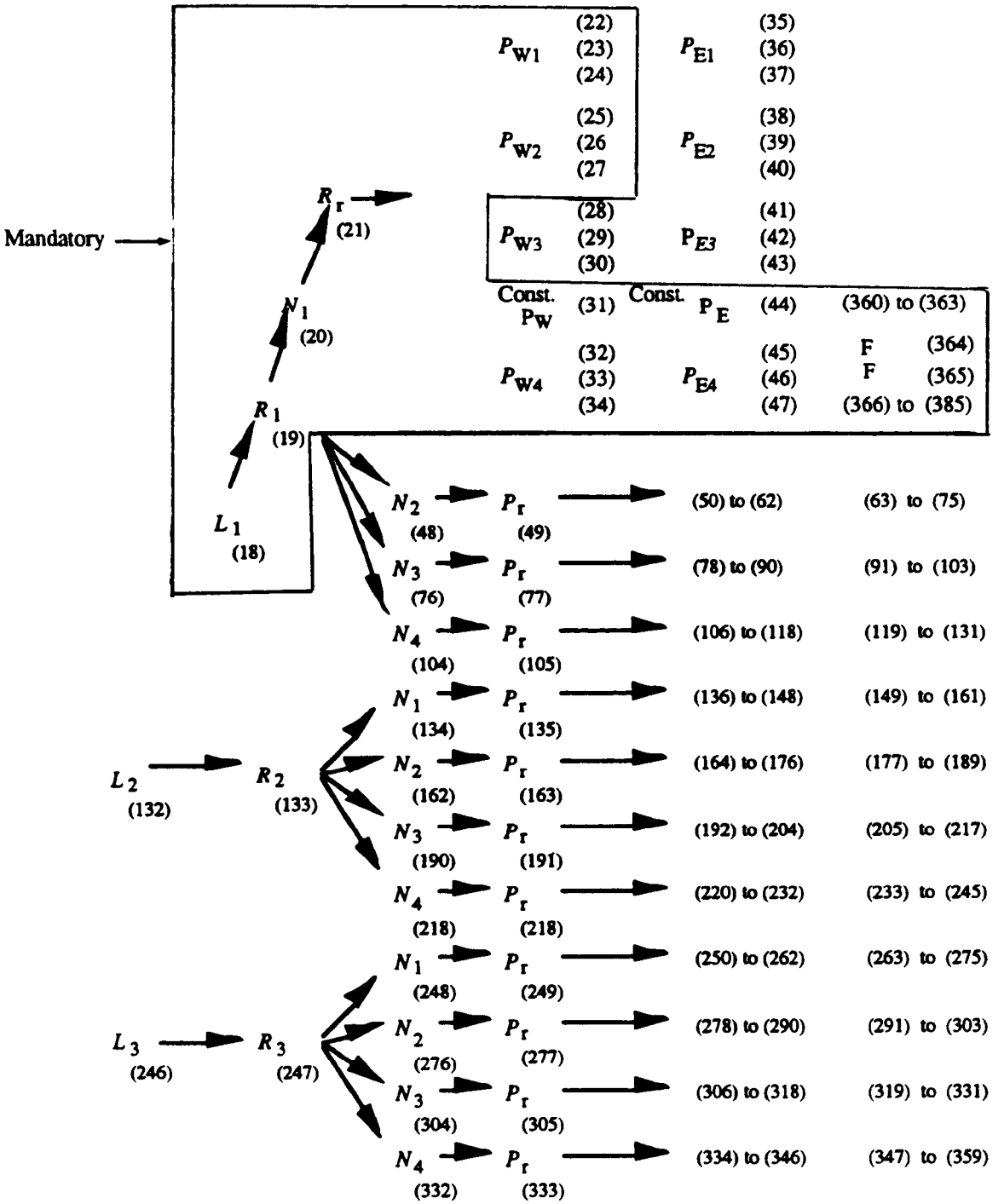


## 16.6 System Information

Bytes 384 and 385 are mandatory, they shall specify in binary notation the track number $N$ of the last track of the User Zone. The total number of tracks in this zone is $(N+1)$.

### Byte 384

This byte shall specify the most significant byte of this number.



Copyright International Organization for Standardization
Provided by IHS under license with ISO
No reproduction or networking permitted without license from IHS
Not for Resale

**Byte 385**

This byte shall specify the least significant byte of this number.

**Bytes 386 to 393**

These bytes shall be set to (FF).

**Bytes 394 to 447**

These bytes shall be set to (FF).

### 16.7 Unspecified content

The contents of bytes 448 to 511 are not specified by this International Standard. They shall be ignored in interchange.

### 16.8 Requirements for interchange of a user-recorded cartridge

An interchanged optical disk cartridge according to this International Standard shall satisfy the following requirements on all tracks in the User Zone (see annex K).

#### 16.8.1 Requirements for reading

The data recorded on the disk shall be readable under the read conditions specified in bytes 18 to 21 of the SFP Zone.

#### 16.8.2 Requirements for writing and erasing

Data may be recorded on the disk under the write and erase conditions specified in bytes 18 to 47 of the SFP Zone or under the write conditions specified in some or all of the bytes 48 to 346 if provided. In either case the so recorded data shall satisfy the requirement of 16.8.1.

## 17 Sector format

Sectors shall have one of the two layouts shown in figure 19 and figure 20 depending on the number of user bytes in the Data field (see 17.11). On the disk 8-bit bytes shall be represented by Channel bits (see 18).

In figure 19 and figure 20 the numbers above and below the fields indicate the number of bytes in each field.



Copyright International Organization for Standardization
Provided by IHS under license with ISO
No reproduction or networking permitted without license from IHS
Not for Resale

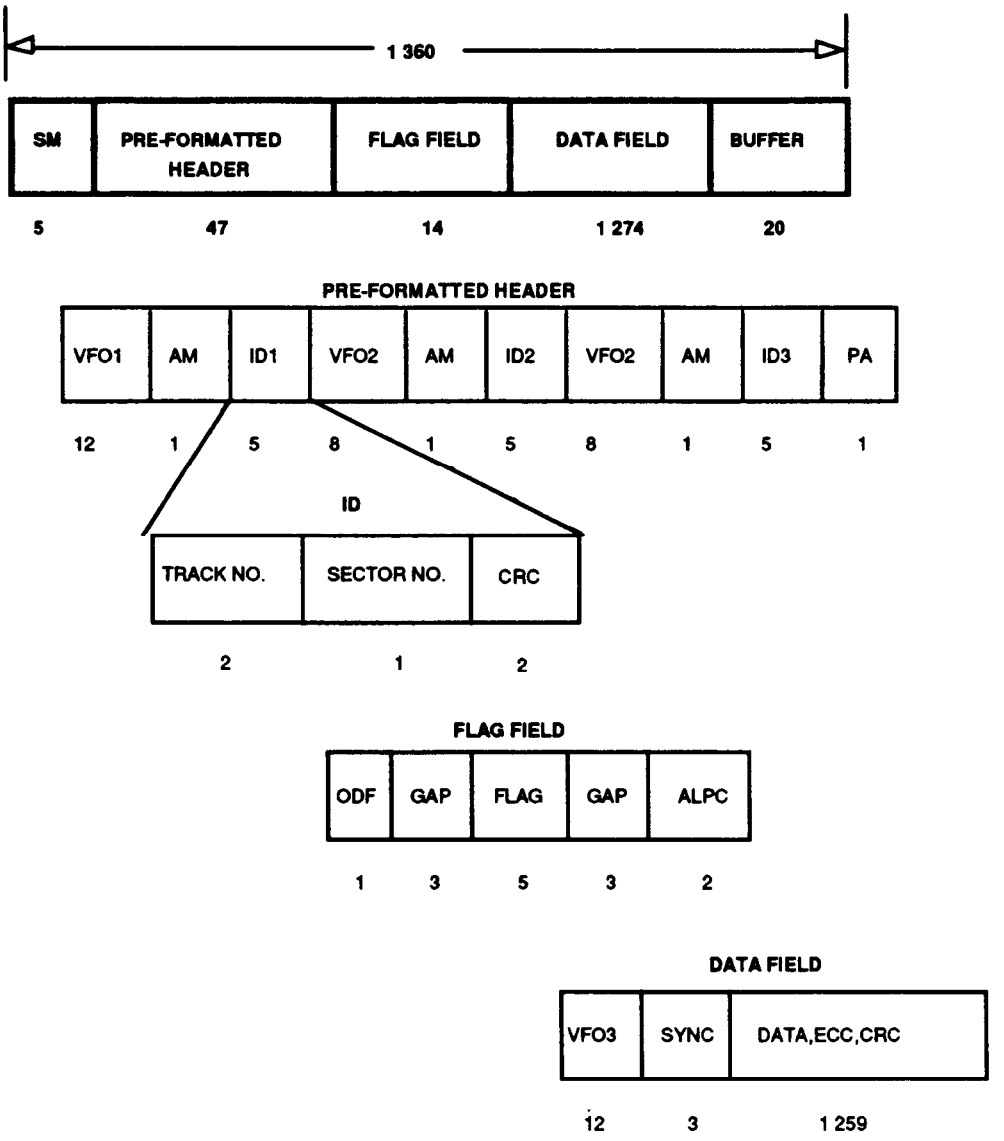


**Figure 19 - Sector format for 1 024 user bytes**



Copyright International Organization for Standardization
Provided by IHS under license with ISO
No reproduction or networking permitted without license from IHS
Not for Resale

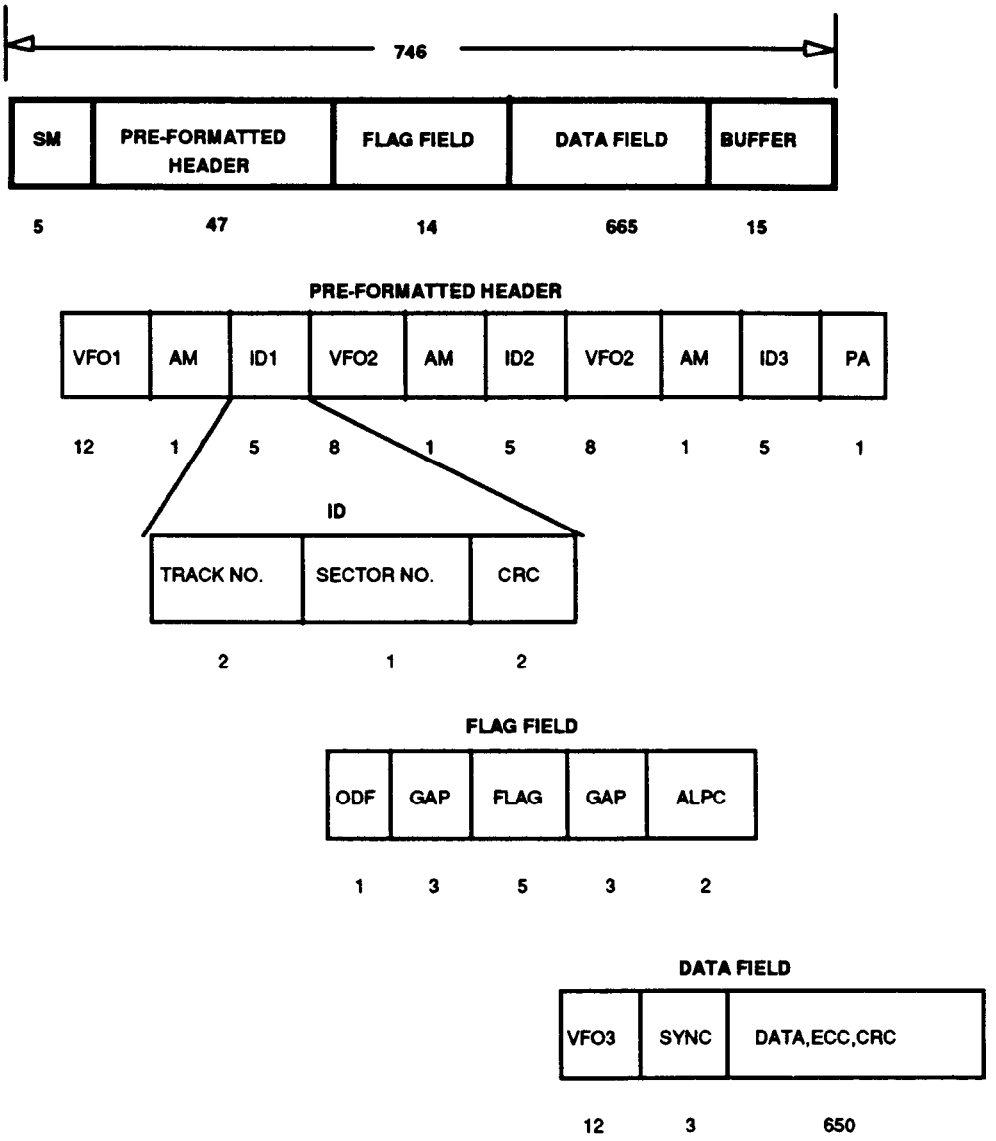


**Figure 20 - Sector format for 512 user bytes**

### 17.1 Sector Mark (SM)

The Sector Mark shall have a length of 5 bytes and shall consist of pre-recorded, continuous, long marks of different Channel bit lengths followed by a lead-in to the $VFO_1$ field. This pattern does not exist in data.

The Sector Mark pattern shall be as shown in figure 21, where T corresponds to the time length of one Channel bit. The signal obtained from a mark is less than a signal obtained from no mark. The long mark pattern shall be followed by the Channel bit pattern: 00X0010010 where X can be ZERO or ONE.



Copyright International Organization for Standardization
Provided by IHS under license with ISO
No reproduction or networking permitted without license from IHS
Not for Resale

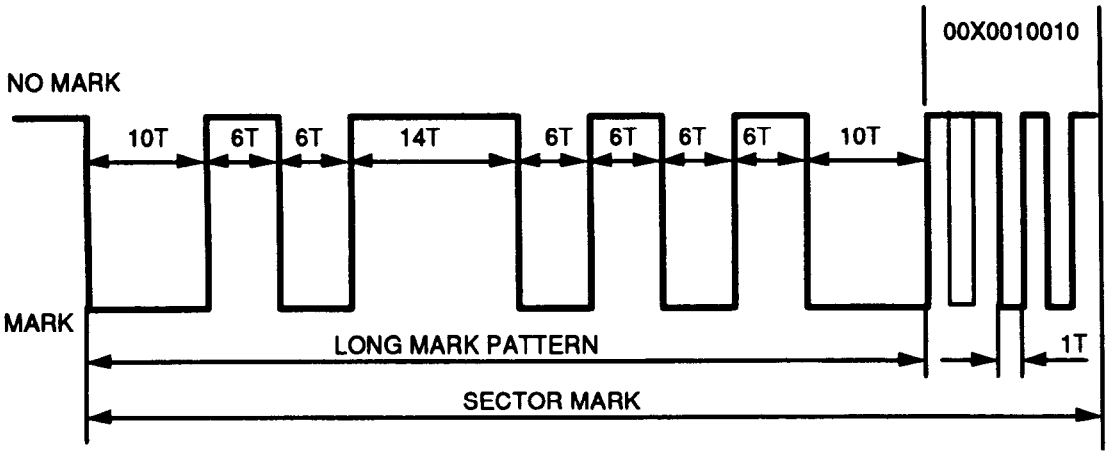


**Figure 21 - Sector Mark pattern**

### 17.2 VFO areas

There shall be four areas designated $VFO_1$, $VFO_2$ and $VFO_3$ to lock up the VFO. The recorded information for $VFO_1$ and $VFO_3$ is identical in length and pattern. $VFO_2$ shall be recorded with one of two patterns differing only in the first bit and shall be 4 bytes shorter than $VFO_1$ and $VFO_3$.

Since there are three ID fields, and RLL (2,7) modulation coding is used, the pattern chosen for each $VFO_2$ will depend on the last byte of the CRC recorded in the preceding ID field (see 18).

The continuous Channel bit pattern for VFO areas shall be:

$VFO_1$ : 192 Channel bits = 01001001001 .... 010010
$VFO_2$ : 128 Channel bits = 10010010010 .... 010010
$VFO_2$ : 128 Channel bits = 00010010010 .... 010010
$VFO_3$ : 192 Channel bits = 01001001001 .... 010010

### 17.3 Address Mark (AM)

The AM is a Channel bit pattern not used in RLL (2,7) and is a run-length violation for RLL (2,7). This 16-bit Channel bit pattern shall be

0100 1000 0000 0100

### 17.4 ID and CRC

This field shall consist of five bytes.

**1st Byte**

This byte shall specify the most significant byte of the track number.

**2nd Byte**

This byte shall specify the least significant byte of the track number.

**3rd Byte**

| | |
|---|---|
| bits 7 and 6 | shall specify the ID number:<br>when set to 00 shall mean the $ID_1$ field,<br>when set to 01 shall mean the $ID_2$ field,<br>when set to 10 shall mean the $ID_3$ field. |
| bits 5 to 0 | shall specify the sector number in binary notation. |



Copyright International Organization for Standardization
Provided by IHS under license with ISO
No reproduction or networking permitted without license from IHS
Not for Resale

#### 4th and 5th Bytes

These two bytes shall specify a 16-bit CRC computed over the first three bytes of this field (see annex E).

### 17.5 Postamble (PA)

This field shall be an area equal in length to 16 Channel bits following the $ID_3$ field. Due to the use of the RLL (2,7) encoding scheme (see 18), the framing of the last byte of the CRC in the $ID_3$ field is uncertain within a few bit times. The Postamble allows the last byte of the CRC to achieve closure and permits the ID field to end always in a predictable manner. This is necessary in order to locate the following field (ODF) in a consistent manner.

### 17.6 Offset Detection Flag (ODF)

This field shall be an area equal in length to 32 Channel bits with neither grooves nor pre-formatted data.

### 17.7 Gap

This field shall consist of an unrecorded area equal in length to 32 Channel bits.

### 17.8 Flag

The content of this field is not specified by this International Standard, it shall be ignored in interchange. This field is included in the sector format only for compatibility with the sector format of ISO/IEC 9171-2 where its content is specified.

### 17.9 Auto Laser Power Control (ALPC)

This field shall consist of an unrecorded area of two bytes equal in length to 32 Channel bits. It is intended for testing the laser power level.

### 17.10 Sync

This field shall have a length equal to 48 Channel bits. It shall be recorded with the Channel bit pattern:

0100 0010 0100 0010 0010 0010 0100 0100 1000 0010 0100 1000

### 17.11 Data field

This field shall consist of either

1 259 bytes comprising

- 1 024 user bytes
- 223 bytes for CRC, ECC and Resync
- 12 bytes for control information

or

650 bytes comprising

- 512 user bytes
- 124 bytes for CRC, ECC and Resync
- 12 bytes for control information
- 2 (FF)-bytes.

The disposition of these bytes in the Data field is specified in annex F.

#### 17.11.1 User bytes

These bytes are at the disposal of the user for recording information. There are 1 024 or 512 such bytes depending on the sector format.

#### 17.11.2 CRC and ECC

The computation of the check bytes of the CRC and ECC shall be as specified in annex F.



Copyright International Organization for Standardization
Provided by IHS under license with ISO
No reproduction or networking permitted without license from IHS
Not for Resale

### 17.11.3 Bytes for control information

This 12-byte field is intended to prevent inadvertent write operations over previously written data. When the sector does not contain user data, this field shall be unrecorded. When the sector does contain user data, the bytes of this field shall be set to (FF).

### 17.11.4 Last bytes of the Data field of the 512-byte sector format

The last two bytes of the Data field of the 512-byte sector format shall be set to (FF).

### 17.11.5 Resync

The Resync fields shall be inserted between the bytes of the Data field as specified in annex G.

### 17.12 Buffer

This field shall have a nominal length equal to 320 Channel bits (see figure 19) or of 240 Channel bits (see figure 20). Up to 16 additional Channel bits may be written in this field to allow completion of the RLL (2,7) coding scheme (see 18). The remaining length is to allow for motor speed tolerances and other electrical and/or mechanical tolerances.

## 18 Recording code

The 8-bit bytes in the three ID fields and in the Data field, except for the Resync bytes, shall be converted to Channel bits on the disk according to table 5. All other fields in a sector have already been defined in terms of Channel bits. Each ONE Channel bit shall be recorded as a mark produced by a write pulse of the appropriate power and width.

The recording code used to record all data in the formatted areas of the disk shall be the run-length limited code known as RLL (2,7).

**Table 5 - Conversion of input bits to Channel bits**

| Input bits | Channel bits |
|---|---|
| 10 | 0100 |
| 010 | 100100 |
| 0010 | 00100100 |
| 11 | 1000 |
| 011 | 001000 |
| 0011 | 00001000 |
| 000 | 000100 |

The coding shall start at the first bit of the first byte of the field to be converted. After a Resync field the RLL (2,7) coding shall start again with the first bit of the next byte of input data.

The RLL (2,7) coding can seldom be stopped at the end of the last input in a field, because of leftover bits which cannot be converted on their own. To achieve closure of the recording code, three pad bits are added at the end of the field before converting the data to Channel bits. Table 5 defines the closure for all possible combinations of leftover bits.

The $ID_1$ and $ID_2$ fields shall lead to one of the two patterns for the $VFO_2$.

The $ID_3$ field shall lead to one of two possible patterns in the PA field.

The bytes in the Data field preceding a Resync field shall lead to the Resync pattern.

## 19 Defect management

Defective sectors on the disk shall be replaced by good sectors according to the defect management scheme described below. Each side of the disk must be initialized prior to its use. This specification allows media initialization with and without



Copyright International Organization for Standardization
Provided by IHS under license with ISO
No reproduction or networking permitted without license from IHS
Not for Resale

certification. Defective sectors found during certification are replaced with adjacent good ones. A sector slipping algorithm is used to determine proper sector reassignments. Defective sectors found after initialization are replaced with spare sectors from a dedicated spare area. A linear replacement algorithm is used to determine proper sector reassignments. The maximum number of defective sectors per disk surface for a disk with 512-byte sectors shall not exceed 2 048, for a disk with 1 024-byte sectors the maximum number of defective sectors shall not exceed 1 275.

Four data management areas (DMAs) are located at the ID of the disk between track -9 and -2. Track -1 is not used for defect management. Each DMA contains a copy of a Disk Definition Structure (DDS), a Zone Structure Table (ZST), a primary Defect List (PDL) and a Secondary Defect List (SDL). The first DMA starts at track -9, sector 0. See figure 22 and figure 23 for more details.

After media initialization, each DMA shall have the following content: The first sector shall contain the DDS. The second sector shall be the first sector of the PDL, if it has been recorded. The length of the PDL is determined by the number of entries in it. The SDL shall begin in the sector following the last sector of the PDL. If there is no PDL, the SDL shall begin in the second sector of the DMA. The length of the SDL is determined by the number of entries in it. The ZST is recorded following the SDL; refer to figure 22 and 23 for the ZST locations.

All byte assignments of the DDS, PDL and SDL are similar to the ones specified in ISO/IEC 10089. In addition to the data structures defined in ISO/IEC 10089, a zone structure (ZST) is used. Each zone has a 16-byte entry in this data structure. The ZST definition is shown in table 8. Table 9 defines the content of a 16-byte zone descriptor.

### 19.1 Media initialization

During media initialization the physical zones are divided into user and spare areas. Data describing the disk surface organization is compiled and stored in the DDS and ZST. Media initialization can include a certification of the user area.

Disks of Type WO shall be initialized only once. Once the DMAs are recorded, it indicates that the disk is initialized and that no further initialization of the disk is permitted. All sectors in the User Zone shall be erased at the end of the initialization.

#### 19.1.1 Media initialization with certification

The media certification consists of erasing, writing and reading all sectors from track 0 to track N, where N is the track number of the last track in the User Zone.

If there are no defective sectors, no PDL shall be recorded. In either case an empty SDL shall be recorded. If defective sectors are found during this procedure, their addresses shall be written in ascending order in the PDL. Defective sectors shall not be used for reading or writing. If defective, a sector shall be retired, and the reference to it shall be re-directed (slipped) to the next good sector. This algorithm causes the reference to all subsequent sectors to be re-directed by one sector into the local spare area. If the local spare area is filled during the certification process, excessive defective sectors shall be re-assigned to free spare sectors in adjacent zones and recorded in the SDL. This International Standard does not specify criteria for declaring a sector to be defective (see annex G).

#### 19.1.2 Media initialization without certification

Either an empty PDL or no PDL shall be recorded. If an empty PDL is recorded, byte 3 of the DDS shall be set to (01). If no PDL is recorded, byte 3 of the DDS shall be set to (02). An empty SDL shall be recorded.

### 19.2 Write and read procedure

When writing or reading data in the sectors of a zone, all defective sectors listed in the PDL shall be skipped and those listed in the SDL shall be replaced. If during or after writing, a data sector is found to be defective, it shall be rewritten in the first available spare sector of the zone. If there are no spare sectors left in that zone, the defective sector shall be rewritten in the first available spare sector in one of the nearest zone. If the replacement sector is found to be defective, the sector shall be rewritten in the next available spare sector. The address of the defective sector and the address of the replacement sector shall be written in the SDL. There shall be no entries in the SDL pointing to a defective replacement sector. The total number of defective sectors that are identified in the PDL and SDL shall not exceed 2 048 or 1 275, depending on the number of bytes per sector.

For disks of Type WO, after media initialization, all sectors in the User Zone are in the erased state. Erasing of sectors in the User Zone after initialization is not permitted. Before writing a sector in the User Zone, it shall be determined whether or not the sector has been written. If the sector has been written, a write operation is not permitted. During write operations, sectors shall always be recorded with CRC, ECC and the 12 (FF) bytes as specified by this International Standard (see annex P).



Copyright International Organization for Standardization
Provided by IHS under license with ISO
No reproduction or networking permitted without license from IHS
Not for Resale

Defective sectors in the User Zone shall be dealt with according to the defect management method specified in this International Standard. A replacement sector, listed in the SDL, shall contain the user data of the sector it replaces.

### 19.3 Layout of the User Zone

The User Zone shall contain four DMAs in tracks -9 through -2. The first and last track of each physical zone is not used for data recording. Each zone is divided into a user area and a spare area. Each user area starts at the second track of the zone. The number of data tracks per user area is defined in bytes 6 through 9 in the DDS. The number of spare tracks per zone is defined in bytes 10 through 13 in the DDS.

Each DMA shall contain a DDS, SDL and a ZST, and may contain a PDL. If recorded, all four PDLs shall be identical. The SDLs shall be identical.

After initialization, each DMA shall have the following content. The first sector shall contain the DDS. The second sector shall be the first sector of the PDL if it has been recorded. The length of a PDL is determined by the number of entries in it. The SDL shall begin in the sector following the last sector of the PDL. If there is no PDL, it shall begin in the second sector of the DMA. The length of the SDL is determined by the number of entries in it. Sector 14 of tracks -8, -6, -4 and -2 shall contain the ZST. The contents of the remaining sectors of the DMAs after the SDL shall be ignored for interchange.

The start address of a PDL and that of the SDL within each DDS shall reference the PDL and the SDL in the same DMA.

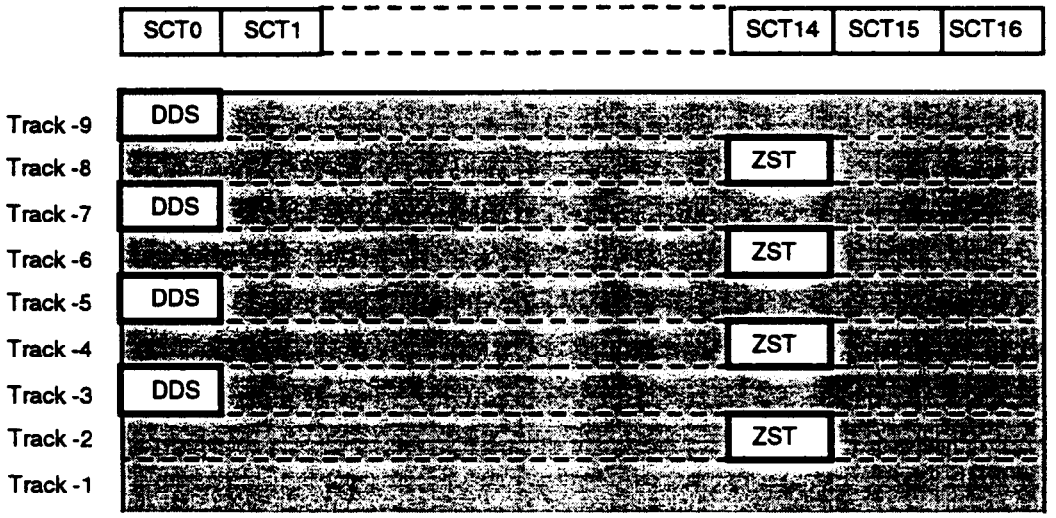


**Figure 22 - Sector assignment of the DMAs for the 1 024-byte format**



Copyright International Organization for Standardization
Provided by IHS under license with ISO
No reproduction or networking permitted without license from IHS
Not for Resale

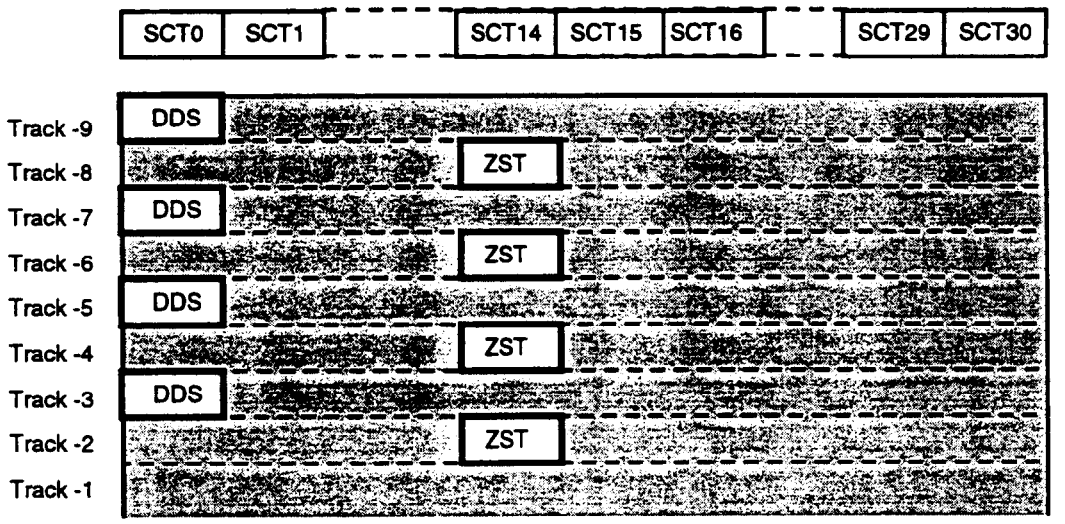


**Figure 23 - Sector assignment of the DMAs for the 512-byte format**

### 19.3.1 Disk Definition Structure (DDS)

The Disk Definition Structure (DDS) shall be contained in the first sector of each DMA as shown in table 6.



Copyright International Organization for Standardization
Provided by IHS under license with ISO
No reproduction or networking permitted without license from IHS
Not for Resale

**Table 6 - Byte assignment of the Disk Definition Structure**

| Byte | Description |
|---|---|
| 0 | (0x) (Disk Definition Structure Identifier MSB) |
| 1 | (0x) (Disk Definition Structure Identifier LSB)<br>(0A) for Type R/W<br>(05) for Type W/O |
| 2 | (00) |
| 3 | (01) PDL has been recorded<br>(02) No PDL has been recorded |
| 4 | *g*, Number of Groups MSB |
| 5 | *g*, Number of Groups LSB<br>*g* = (1E) for 512 Bytes/Sector disks<br>*g* = (11) for 1024 Bytes/Sector disks |
| 6 | *n*, Number of data tracks/group MSB |
| 7 | *n*, Number of data tracks/group |
| 8 | *n*, Number of data tracks/group |
| 9 | *n*, Number of data tracks/group LSB |
| 10 | *m*, Number of spare tracks/group MSB |
| 11 | *m*, Number of spare tracks/group |
| 12 | *m*, Number of spare tracks/group |
| 13 | *m*, Number of spare tracks/group LSB |
| 14 | Start of PDL, track number MSB |
| 15 | Start of PDL, track number |
| 16 | Start of PDL, track number LSB |
| 17 | Start of PDL, sector number |
| 18 | Start of SDL, track number MSB |
| 19 | Start of SDL, track number |
| 20 | Start of SDL, track number LSB |
| 21 | Start of SDL, sector number |

All remaining bytes in this sector shall be set to (00).

If byte 3 is set to (02), bytes 14 to 17 shall be set to (FF).

### 19.3.2 Primary Defect List (PDL)

The PDL shall consist of bytes specifying

- a defect list identifier set to (01) for the PDL;
- the length of the PDL;
- the sector addresses of defective sectors in ascending order of sector addresses.

Table 7 shows the PDL byte layout. All remaining bytes of the last sector in which the PDL is recorded, shall be set to (FF). If no defective sectors are detected, then the first defective sector address is set to (FF) and the list length bytes are set to (00).



--`,,```,,,,````-`-`,,`,,`,`,,`---
Copyright International Organization for Standardization
Provided by IHS under license with ISO
No reproduction or networking permitted without license from IHS
Not for Resale

**Table 7 - Primary Defect List**

| Byte | Description |
|---|---|
| 0 | (00) |
| 1 | (01) (Defect List Identifier) |
| 2 | Number of entries MSB (each entry is 4 bytes long) |
| 3 | Number of entries LSB |
| 4 | Address of first defective sector (track number MSB) |
| 5 | Address of first defective sector (track number) |
| 6 | Address of first defective sector (track number LSB) |
| 7 | Address of first defective sector (sector number) |
| : | |
| : | |
| *n*-3 | Address of *n*-th defective sector (track number MSB) |
| *n*-2 | Address of *n*-th defective sector (track number) |
| *n*-1 | Address of *n*-th defective sector (track number LSB) |
| *n* | Address of *n*-th defective sector (sector number ) |

### 19.3.3 Secondary Defect List (SDL)

The SDL is used to record the addresses of sectors which have become defective after initialization and those of their respective replacements. Eight bytes are used for each entry. The first 4 bytes specify the address of the defective sector and the next 4 bytes specify the address of the replacement sector.

The SDL shall consist of bytes identifying the SDL, specifying the length of the SDL, and of a list containing the addresses of defective sectors and those of their replacement sectors. The addresses of the defective sectors shall be in ascending order. Table 8 shows the SDL layout. All remaining bytes of the last sector in which the SDL is recorded shall be set to (FF). An empty SDL shall consist of bytes 0 to 9 as shown in table 8; bytes 8 and 9 shall be set to (00).



Copyright International Organization for Standardization
Provided by IHS under license with ISO
No reproduction or networking permitted without license from IHS
Not for Resale

**Table 8 - Secondary Defect List**

| Byte | Description |
|---|---|
| 0 | (00) |
| 1 | (02) (defect list identifier) |
| 2 | (00) |
| 3 | (01) |
| 4 | List length MSB (specified in bytes from byte 6 to byte *x*-1) |
| 5 | List length LSB |
| 6 | (02) (SDL) |
| 7 | (01) |
| 8 | List length MSB (specified in bytes from byte 10 to byte *x*-1) |
| 9 | List length LSB |
| 10 | Address of first defective sector (track number MSB) |
| 11 | Address of first defective sector (track number) |
| 12 | Address of first defective sector (track number LSB) |
| 13 | Address of first defective sector (sector number) |
| 14 | Address of first replacement sector (track number MSB) |
| 15 | Address of first replacement sector (track number) |
| 16 | Address of first replacement sector (track number LSB) |
| 17 | Address of first replacement sector (sector number ) |
| : | |
| : | |
| *x*-8 | Address of last defective sector (track number MSB) |
| *x*-7 | Address of last defective sector (track number) |
| *x*-6 | Address of last defective sector (track number LSB) |
| *x*-5 | Address of last defective sector (sector number ) |
| *x*-4 | Address of last replacement sector (track number MSB) |
| *x*-3 | Address of last replacement sector (track number) |
| *x*-2 | Address of last replacement sector (track number LSB) |
| *x*-1 | Address of last replacement sector (sector number) |

### 19.3.4 Zone Structure Table (ZST)

The Zone Structure Table describes the physical layout of the disk surface. Each zone is defined with a 16-byte zone descriptor. This data structure defines the address of the first sector in this zone, the current zone defect count, the address of the first spare sector and the address of the next available spare sector.

Table 9 shows the ZST byte layout. All remaining bytes of the sector in which the ZST is recorded, shall be set to (FF). Table 10 shows the layout of the zone descriptors.



Copyright International Organization for Standardization
Provided by IHS under license with ISO
No reproduction or networking permitted without license from IHS
Not for Resale

**Table 9 - Zone Structure Table**

| Starting Byte | Block Description |
|---|---|
| 0 | (B9) ZST identifier |
| 1 | (E6) ZST identifier |
| 2 | 16-byte zone descriptor for zone Nmax |
| 18 | 16-byte zone descriptor for zone Nmax-1 |
| 34 | 16-byte zone descriptor for zone Nmax-2 |
| : | |
| : | |
| 242/450 | 16-byte zone descriptor for zone 1 |
| 258/466 | 16-byte zone descriptor for zone 0 |

**Table 10 - Layout of the zone descriptor**

| Byte | Description |
|---|---|
| 0 | Sectors per track |
| 1 | Starting track of the user area, physical address LSB |
| 2 | Starting track of the user area, physical address MSB |
| 3 | Starting sector of the user area, physical address |
| 4,5 | set to (00) |
| 6 | Zone defect count, LSB |
| 7 | Zone defect count, MSB |
| 8 | Starting address of the spare track, LSB |
| 9 | Starting address of the spare track, MSB |
| 10 | Number of spare sector starting address |
| 11 | Number of spare sectors left in the zone, LSB |
| 12 | Number of spare sectors left in the zone, MSB |
| 13 | Next spare sector, physical track address, LSB |
| 14 | Next spare sector, physical track address, MSB |
| 15 | Next spare sector, physical address |



Copyright International Organization for Standardization
Provided by IHS under license with ISO
No reproduction or networking permitted without license from IHS
Not for Resale

## Section 4 - Characteristics of embossed information

### 20 ZCAV format

This format is based on the Continuous Composite Servo tracking method. The Zoned Constant Angular Velocity (ZCAV) format divides the disk surface radially into either 17 zones for 1 024 byte sectors or 30 zones for 512 byte sectors. Each zone contains 1 177 or 667 tracks, respectiviely. Each track within a zone contains the same number of sectors. The zone located at the outer disk diameter (OD) is called zone zero. A track in zone zero contains 33 sectors for 1 024 byte sectors and 60 sectors for 512 byte sectors. To accommodate zone boundary conditions e.g., misaligned ODF marks, the first and last track of each zone is not used. Refer to tables 1 and 2.

Disks with 512 bytes per sector have 20 010 tracks in the User Zone, and disks with 1 024 bytes per sector have 20 009 tracks. Track zero is located at the inner recording radius at 30 mm.

NOTE - In SCSI environments, LBA 0 is not located at track 0. For performance reasons, a non-linear mapping algorithm is employed. See annex L for more details.

#### 20.1 Tracking

This format is characterized by continuous tracking centred between adjacent grooves that are preformed on the disk.

All tracks shall have grooves which shall be continuous, except for ODF marks. Recording shall be on-land.

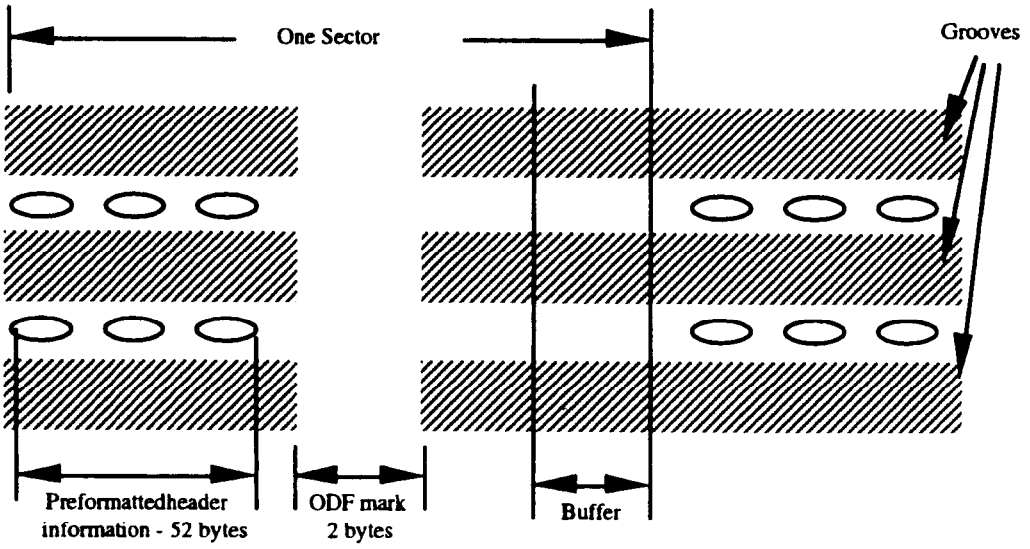


**Figure 24 - Example of a sector with Offset Detection Flag for on-land recording (schematic)**

#### 20.2 Characteristics of pre-recorded information

The characteristics of the signals read shall refer to signals obtained at the optical head. Each of these characteristics shall be measured with beams linearly polarized both perpendicular and parallel to the grooves under the conditions specified in 21.1.1 and 21.1.2.

#### 20.2.1 Groove-related signals

The following requirements shall be met (see figure 25):

Cross-track maximum signal

$$0{,}70 \leq (I_1 + I_2)\text{max} / (I_1 + I_2)\text{a} \leq 1{,}00$$



Copyright International Organization for Standardization
Provided by IHS under license with ISO
No reproduction or networking permitted without license from IHS
Not for Resale

where $I_1$ and $I_2$ are the outputs of the two halves of the split photo diode detector in the Tracking Channel (see clause 9). $(I_1 + I_2)$max indicates the maximum signal when the beam crosses tracks, and $(I_1 + I_2)_a$ is the signal obtained from an unrecorded, ungrooved area.

Push-pull ratio

$$0{,}40 \leq (|I_1 - I_2|) / (I_1 + I_2)_a \leq 0{,}65$$

where $(|I_1 - I_2|)$ is the peak-to-peak amplitude of the differential output of the two halves of the split photo diode detector in the Tracking Channel.

Cross-track signal modulation ratio

$$0{,}20 \leq [(I_1+I_2)\text{max} - (I_1+I_2)\text{min}] / (I_1 + I_2)_a \leq 0{,}60$$

Over the whole disk this ratio shall not vary by more than 3 dB.

**Phase depth**

The phase depth of the grooves equals

$$\frac{n \times d}{\lambda} \times 360°$$

where:

$n$ is the index of refraction of the substrate
$d$ is the groove depth
$\lambda$ is the wavelength

The phase depth shall be less than 180°.

**Track location**

The tracks are located at those places on the disk where $(I_1 - I_2)$ equals zero and $(I_1 + I_2)$ has its maximum value.

On-track signal ratio

$$0{,}7 \leq I_{ot} / I_o \leq 1{,}0$$

where $I_{ot}$ is the signal in Channel 1 (see clause 9) when the beam is on track. $I_o$ is the signal in the same Channel 1 obtained from an ungrooved, unrecorded area.

### 20.2.2 Properties of pre-recorded marks

The signals specified below are obtained from Channel 1 (see clause 9), and shown in figure 25.

**Sector Mark signal** (see 17.1)

The Sector Mark signal shall meet the requirement

$$|I_{sm}| / I_o \geq 0{,}50$$

where $I_{sm}$ is the peak-to-peak amplitude of the read signal from the Sector Mark.

**VFO signals** (see 17.2)

The signals from the $VFO_1$ and $VFO_2$ fields shall meet the requirement

$$|I_{vfo}| / I_o \geq 0{,}25$$

where $I_{vfo}$ is the peak-to-peak amplitude of the read signal from the VFO area.

In addition the condition

$$|I_{vfo} / I_{pmax}| \geq 0{,}50$$

shall be satisfied within each sector, where $I_p$ is the signal in that sector from pre-recorded marks which are not Sector Marks.



Copyright International Organization for Standardization
Provided by IHS under license with ISO
No reproduction or networking permitted without license from IHS
Not for Resale

**Address Mark, ID and PA signals** (see 17.3, 17.4 and 17.5)

The signals from these fields shall meet the requirements

$$1{,}00 > I_p / I_o > 0{,}40$$

$$(I_{pmax} - I_{pmin}) / I_o < 0{,}20 \text{ over any one track}$$

These requirements apply only to such marks having a repetition rate of less than 1,4 MHz.

### 20.2.3 Parameters of the read characteristics

Figure 25 shows the different parameters for the read characteristics.

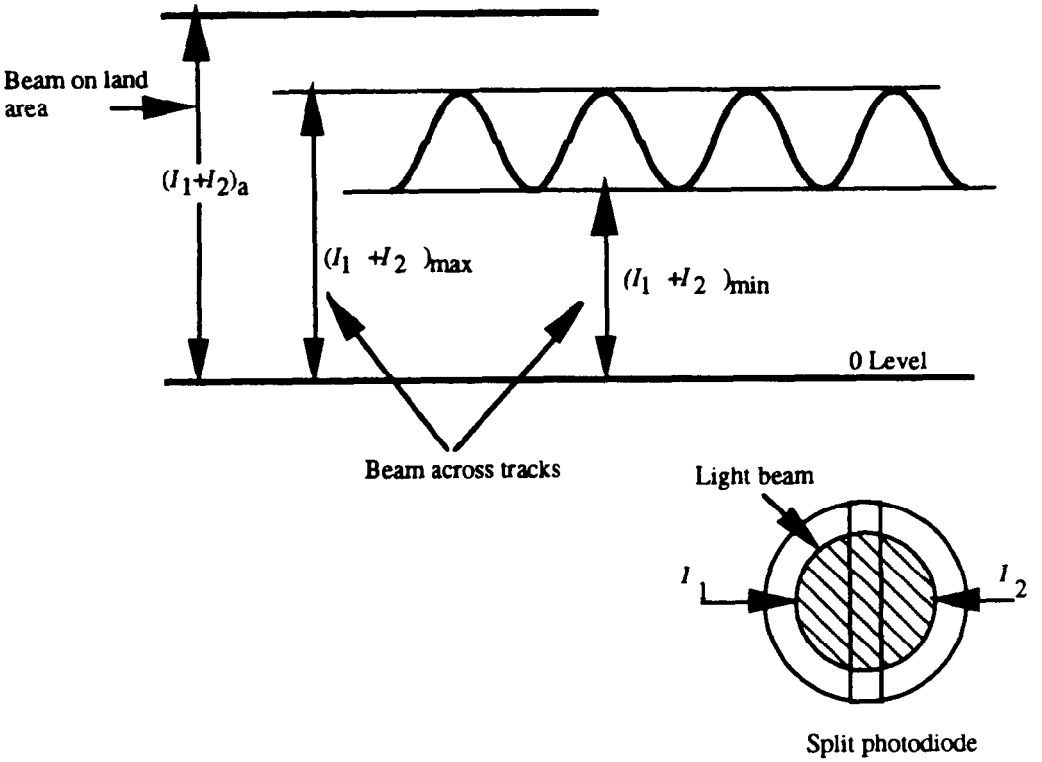


**Figure 25a - Signals from grooves in the Tracking Channel**

Copyright International Organization for Standardization
Provided by IHS under license with ISO
No reproduction or networking permitted without license from IHS
Not for Resale

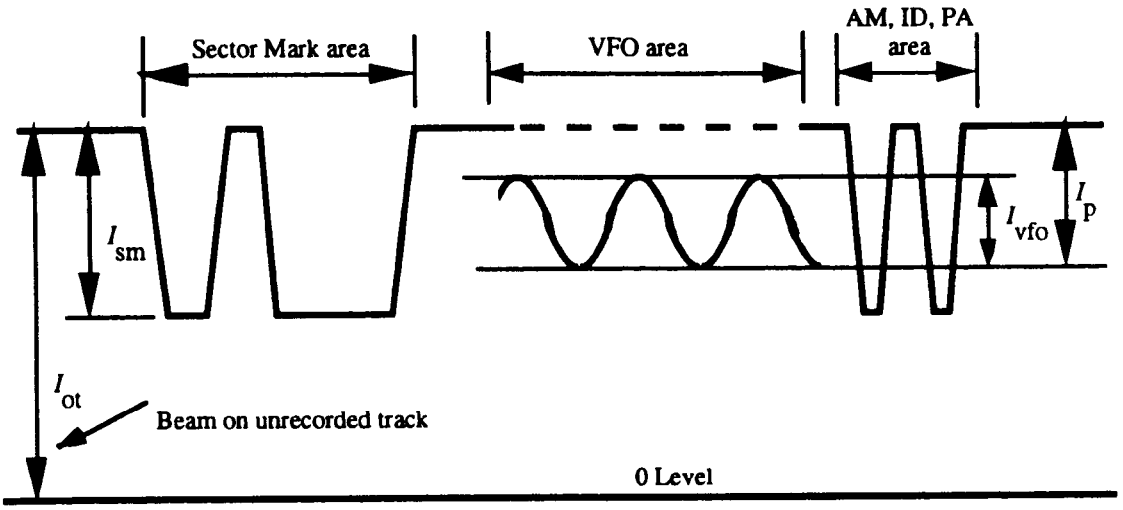


**Figure 25b - Signals from Headers in Channel 1**

**Figure 25 - Illustration of the various parameters for read characteristics**

## Section 5 - Characteristics of the recording layer

### 21 Characteristics of the recording layer

The requirements of this clause shall be met for the linear polarization of the optical beam, both when parallel and when perpendicular to the tracks. Unless otherwise stated, all tests in this clause shall be carried out under the conditions of 21.1.1, and 21.1.2, 21.1.3, 21.1.4, as appropriate.

### 21.1 Test conditions

#### 21.1.1 General

The general test conditions are specified in 9.2.

#### 21.1.2 Read conditions

Marks on the disk are read from the disk with a constant optical power.

The read power is the optical power incident at the entrance surface, used when reading, and is specified as follows for the stated zones (see 16.1):

a) PEP Zone

The read power shall not exceed 0,5 mW.

b) SFP Zone

The read power shall not exceed the value given in byte 6 of the PEP Zone (see 16.3.3.1.4).

c) User Zone

The read power shall not exceed the value given in byte 21 of the SFP Zone (see 16.5).

#### 21.1.3 Write conditions

Marks are written on to the disk by pulses of optical power superimposed upon a specified bias power 1,5 mW ± 10 % (see annex A).

The pulse shape shall be as specified in annex A.



Copyright International Organization for Standardization
Provided by IHS under license with ISO
No reproduction or networking permitted without license from IHS
Not for Resale

The write power is the optical power incident at the entrance surface, used when writing in the User Zone.

Testing shall be carried out at either

- a constant pulse width and a write power appropriate to the radius, as given in bytes 22 to 24 or 25 to 27 of the SFP Zone (see 16.5), or
- a constant write power given in byte 31 and a pulse width appropriate to the radius, as given in bytes 32 to 34 of the SFP Zone (see 16.5).

For radii other than 30 mm, 45 mm or 60 mm the values shall be linearly interpolated from the above.

In all cases the actual power and pulse width used shall be within 5 % of those selected.

The required power shall not exceed

a) for a pulse width $T_p$ between 10 ns and 70 ns:

$$55\left(\frac{1}{T_p}+\frac{1}{\sqrt{T_p}}\right)\text{mW}$$

b) for a pulse width exceeding 70 ns: 10 mW

The requirements for all tests shall be met for all magnetic field intensities, at the recording layer during writing, in the range from 18 000 A/m to 32 000 A/m.

The write magnetic field shall be normal to the recording surface. The direction of the write magnetic field shall be from the entrance surface to the recording layer.

### 21.1.4 Erase conditions

The erase power is the optical power required for any given track at the entrance surface to erase marks written according to 21.1.3 to a specified level (see 21.3.6).

The actual erase power shall be within 10 % of that specified in the control tracks.

Testing shall be carried out at either

- a d.c. power given in bytes 45 to 47 of the SFP Zone (see 16.5),
- or a constant pulse width and an erase power appropriate to the radius, as given in bytes 35 to 37 or 38 to 40 of the SFP Zone (see 16.5),
- or a constant erase power given in byte 44 and a pulse width appropriate to the radius, as given in bytes 45 to 47 of the SFP Zone (see 16.5).

When d.c. erasing is used the required power shall not exceed

10 mW

When pulse erasing is used

a) for a pulse width $T_p$ between 10 ns and 70 ns, the required power shall not exceed

$$55\left(\frac{1}{T_p}+\frac{1}{\sqrt{T_p}}\right)\text{mW}$$

where $T_p$ is the pulse width, in nanoseconds;

b) for a pulse width $T_p$ exceeding 70 ns the required power shall not exceed 10 mW.



Copyright International Organization for Standardization
Provided by IHS under license with ISO
No reproduction or networking permitted without license from IHS
Not for Resale

The requirements for all tests shall be met for all magnetic field intensities, at the recording layer during erasing, in the range from 18 000 A/m to 32 000 A/m.

The erase magnetic field shall be normal to the recording surface. The direction of the magnetic field shall be from the recording layer to the entrance surface.

## 21.2 Baseline reflectance

### 21.2.1 General

The baseline reflectance is the value of the reflectance of an unrecorded, ungrooved area of the disk, measured through the substrate and does not include the reflectance of the entrance surface.

The nominal value $R$ of the baseline reflectance shall be specified by the manufacturer:

in byte 3 of the PEP Zone (see 16.3.3.1.4), and

in byte 19 of the SFP Zone (see 16.5).

### 21.2.2 Actual value

The actual value $R_m$ of the baseline reflectance shall be measured under the conditions a) to e) of 21.1.1 and those of 21.1.2.

Measurements shall be made in any unrecorded, ungrooved area in the ODF (see 20.1).

### 21.2.3 Requirement

At any point in the Formatted Zone, except in the Reflective Zone and in the Lead-out Zone the value $R_m$ shall be within 12 % of the value of $R$, and shall be within the range 0,10 and 0,34.

## 21.3 Magneto-optical recording in the User Zone

### 21.3.1 Resolution

$I_L$ is the peak-to-peak value of the signal obtained in Channel 2 (see clause 9) from marks written under any of the conditions given in 21.1.3 and at a local repetition rate of less than 1,4 MHz at 30 mm, 2,0 MHz ± 0,1 MHz at 45 mm and 2,7 MHz ± 0,1 MHz at 60 mm recording radius, and read under the conditions specified in 21.1.2c).

$I_H$ is the peak-to-peak value of the signal obtained in Channel 2 from marks written under any of the conditions given in 21.1.3 and at a local repetition rate of 3,7 MHz ± 0,1 MHz at 30 mm, 5,5 MHz ± 0,1 MHz at 45 mm and 7,2 MHz ± 0,1 MHz at 60 mm recording radius, and read under the condition specified in 21.1.2c).

The resolution $I_H/I_L$ (see figure 26) shall not be less than 0,4 within any sector. It shall not vary by more than 0,2 over a track.

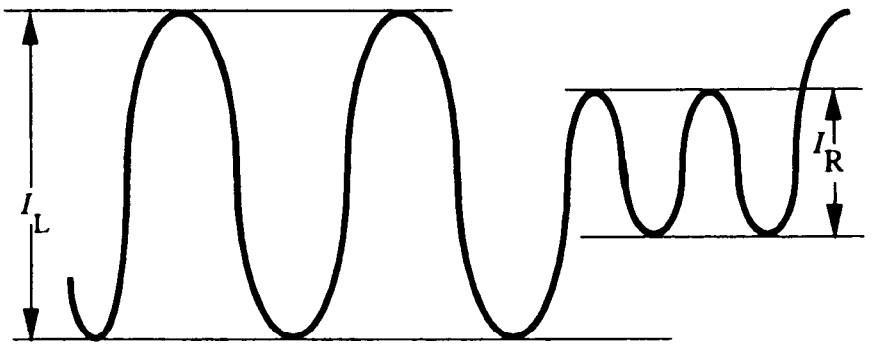


**Figure 26 - Definition of $I_L$ and $I_H$**



Copyright International Organization for Standardization
Provided by IHS under license with ISO
No reproduction or networking permitted without license from IHS
Not for Resale

### 21.3.2 Imbalance of magneto-optical signal

The imbalance of the magneto-optical signal is the ratio of the amplitude of the signal in Channel 2 over the amplitude of the signal in Channel 1 measured in the Data field of a sector. The effect of Kerr rotation shall be eliminated, e.g. by alternating the magnetized direction of the recording layer. The phase retarder in the optical system shall be in the neutral position (see clause 9). Imbalance can be caused by birefringence of the disk.

The imbalance shall not exceed 0,06 in the User Zone, throughout the environmental operating range and in a bandwidth from d.c. to 50 kHz.

### 21.3.3 Figure of merit for magneto-optical signal

The figure of merit $F$ is expressed as the product of $R$, sin $\theta$ and cos $2\beta$, where $R$ is the reflectance expressed as a decimal fraction, $\theta$ is the Kerr rotation and $\beta$ is the ellipticity of the reflected beam. The polarity of the figure of merit is defined to be negative for a written mark in an Fe-rich Fe-Tb alloy layer and with the write magnetic field in the direction specified in 21.1.3. In this case the direction of Kerr rotation is counterclockwise as viewed from the source of the beam.

The polarity and the value of the figure of merit shall be specified in bytes 364 and 365 of the SFP Zone (see 16.5). This nominal value shall be

$$0{,}0017 < |F| < 0{,}0052$$

The measurement of the actual value $F_m$ shall be made according to annex B. This actual value $F_m$ shall be within 12 % of the nominal value.

### 21.3.4 Narrow-band signal-to-noise ratio

Write a track in the User Zone under the conditions given in 21.1.3 and at a frequency $f_0$ of either 3,7 MHz ± 0,1 MHz at 30 mm, 5,5 MHz ± 0,1 MHz at 45 mm or 7,2 MHz ± 0,1 MHz at 60 mm recording radius. Read the Data fields in Channel 2 under the condition specified in 21.1.2 using a spectrum analyzer with a centre frequency $f_0$ and a bandwidth of 30 kHz. Measure the amplitudes of the signal and the noise at $f_0$ (see figure 27). The narrow-band signal-to-noise ratio is

$$20 \log_{10}\left(\frac{\text{signal level}}{\text{noise level}}\right)$$

This ratio shall be greater than 45 dB for all tracks in the User Zone and for all phase differences between -15° and +15° in the optical system as defined in clause 9.

NOTE - It is permitted to use a spectrum analyzer with a bandwidth of 3 kHz and to convert the measured value to that for a 30 kHz value.



Copyright International Organization for Standardization
Provided by IHS under license with ISO
No reproduction or networking permitted without license from IHS
Not for Resale

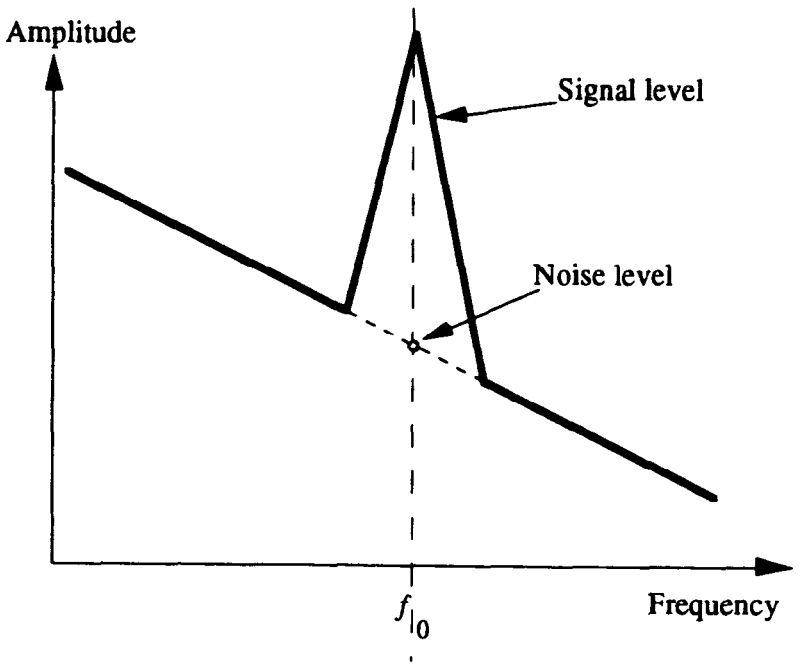


**Figure 27 - Amplitude versus frequency for the magneto-optical signal**

### 21.3.5 Cross-talk ratio

The test shall be carried out on any group of five adjacent unrecorded tracks in the User Zone.

Write on the centre track n under the conditions given in 21.3.4. Read tracks ($n$-1), $n$ and ($n$+1) under the conditions specified in 21.1.2 c). The cross-talk ratio is:

$$20 \log_{10} \left( \frac{\text{signal level of track } n+1}{\text{signal level of track } n} \right) \text{ and } 20 \log_{10} \left( \frac{\text{signal level of track } n-1}{\text{signal level of track } n} \right)$$

It shall be lower than -26 dB.

### 21.3.6 Ease of erasure

**Procedure**

a) Write a track in the User Zone under the conditions given in 21.1.3 and at a frequency $f_0$ of 3,7 MHz ± 0,1 MHz at 30 mm, 5,5 MHz ± 0,1 MHz at 45 mm and 7,2 MHz ± 0,1 MHz at 60 mm recording radius.

b) Read under the condition specified in 21.1.2, using the spectrum analyzer with a centre frequency $f_0$ and a bandwidth of 30 kHz. Note the amplitude of the written marks.

c) Erase under the conditions of 21.1.4.

d) Repeat a) and c) 1000 times.

e) Repeat a).

f) Repeat b); note the signal level of the written marks and of the noise at $f_0$ (see figure 27).

g) Repeat c); note the residual signal level of the written marks at $f_0$.

Requirements

The narrow-band signal-to-noise ratio, calculated from the readings in f), shall be greater than 45 dB.

The residual signal in g) shall be less than -40 dB relative to the signal level of the written marks in b).



Copyright International Organization for Standardization
Provided by IHS under license with ISO
No reproduction or networking permitted without license from IHS
Not for Resale

# Annex A
(normative)

## Definition of write and erase pulse width

The rise and fall times, $T_r$ and $T_f$, shall each be less than 10 ns, when the write pulse width $T_p$ exceeds 50 ns. When $T_p$ is less than 50 ns, $T_r$ and $T_f$ shall each be less than (0,2 $T_p$) ns.

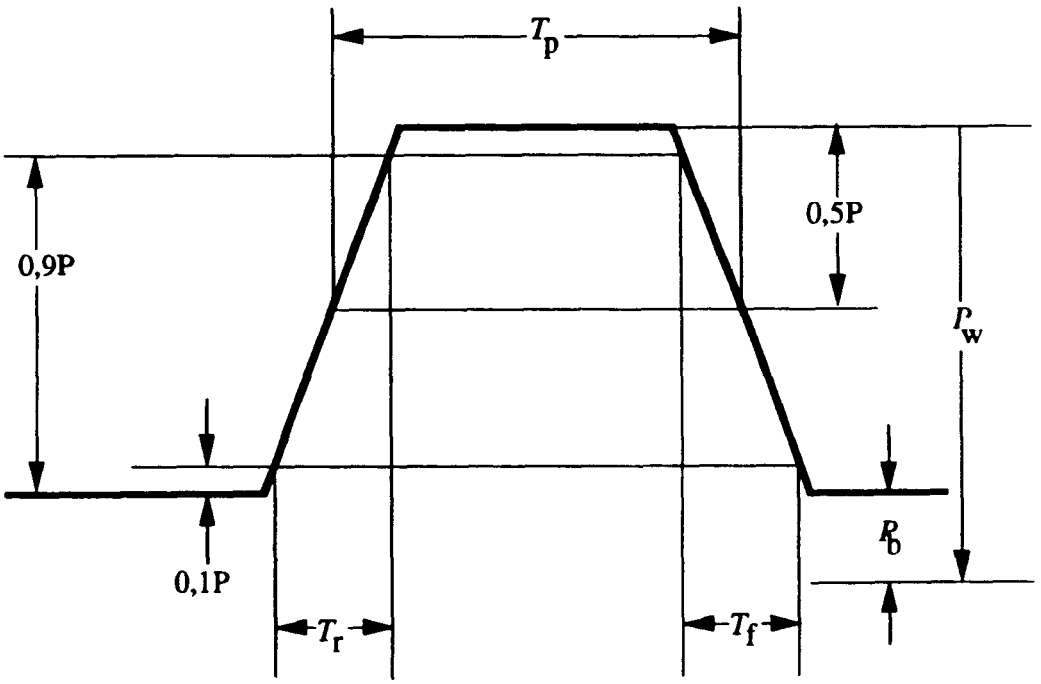


$P_w$ : write power
$P_b$ : bias power
$T_r$ : rise time
$T_f$ : fall time
$T_p$ : write pulse width
$P$ : $P_w - P_b$

**Figure A.1 - Definition of the pulse shape**



Copyright International Organization for Standardization
Provided by IHS under license with ISO
No reproduction or networking permitted without license from IHS
Not for Resale

# Annex B
(normative)

## Measurement of figure of merit

**B.1** The figure of merit is, in practice, equal to the amplitude of the read signal from a recording at low frequency (in two dimensions). The written domains shall be substantially larger than the focal spot, so as to work in the low frequency region where the modulation transfer function of the optical system is one.

This implies that for a preformatted disk, rotating at 30 Hz, a signal with a frequency between 10 kHz and 100 kHz has to be written on several consecutive tracks and in between those tracks maintaining a fixed phase relationship between successive write passes. The disk shall be read with the read power specified in byte 21 of the SFP Zone (see 16.5.2).

Determination of the figure of merit using an optical system as shown in annex A and with characteristics as specified in 15.1.1 will not measure media properties only but also the optical retardation of the optical system. Therefore a calibration of the optical system is needed with a conventional determination of the figure of merit by measuring the reflectance, Kerr rotation and ellipticity. This calibration can only be executed reliably on media with low coercivity.

**B.2** The optical test head shall be calibrated as follows. A test disk with negligible birefringence (glass) an low coercivity magneto-optical layer is used for conventional determination of reflectance $R$, Kerr rotation $\theta$ and ellipticity $\beta$. The product $F_L = R.\sin\theta \cdot \cos 2\beta$ is determined. On the same disk a test pattern as described above is written and read back with the optical head resulting in signal amplitude $V_L$. Any other disk (high or low coercivity) can now be measured with the optical head using a similar test pattern, resulting in a signal amplitude $V$. The figure of merit $F_m$ of this disk is

$$F_m = F_L \times V / V_L$$



Copyright International Organization for Standardization
Provided by IHS under license with ISO
No reproduction or networking permitted without license from IHS
Not for Resale

# Annex C
(informative)

## Values to be implemented in future standards

This International Standard specifies one value only for bytes which identify optical disk cartridges which conform to this International Standard. It is expected that further types of optical disk cartridges will be developed in future. It is therefore recommended that the following values be used for these other cartridges.

### C.1 Byte 0 of the Control Track PEP Zone

Setting of bits 6 to 4:

001 should mean Constant Linear Velocity (CLV)
010 should mean zoned Constant Angular Velocity (ZCAV)
011 should mean Modified Constant Linear Velocity (MCLV)

### C.2 Byte 7 of the Control Track PEP Zone

The following bit pattern should have the indicated meaning:

0000 0000 Read-only ODCs (ROM)
0001 0000 Write-once ODCs as defined by ISO/IEC 9171
0001 0001 ODCs with write-once functionality as defined in this International Standard
0010 0000 Rewritable ODCs of the type MO
0011 0000 Rewritable ODCs of the type phase change
1001 0000 Partial ROM of Write-once ODCs
1010 0000 Partial ROM of MO
1011 0000 Partial ROM of phase change.

Note that when the most significant bit is set to ONE, this indicates a partial ROM.

### C.3 Bytes 35 to 47 of the SFP Zone

These bytes (and the corresponding bytes between byte 50 to byte 359) express erase power and erase pulse width under different conditions.

### C.4 Bytes 360 to 383 of the SFP Zone

These bytes should be used to express magnetic field parameters.

### C.5 Bytes 386 to 389 of the SFP Zone

These bytes should be used for the specification of speed stepping parameters for the ZCAV recording mode.

Byte 386 should be used for the most significant byte of the number of tracks per band.
Byte 387 should be used for the least significant byte of the number of tracks per band.
Byte 388 should be used for the number of clock steps per band.
Byte 389 should be used for the number of added sectors per band.

### C.6 Bytes 390 to 393 of the SFP Zone

These bytes should be used for variable track pitch information.

### C.7 Bytes 472 to 479 of the SFP Zone

These bytes should be used to specify a write strategy.


Copyright International Organization for Standardization
Provided by IHS under license with ISO
No reproduction or networking permitted without license from IHS Not for Resale

# Annex D
(normative)

## Pointer fields

The contents of bytes CD0 through CD11 are not defined for disks of Type R/W of this International Standard. See figure F.1 and F.2 for the location of these bytes.

For disks of Type WO, bytes CD0 to CD11 shall be set to (FF) when a sector is written.



Copyright International Organization for Standardization
Provided by IHS under license with ISO
No reproduction or networking permitted without license from IHS
Not for Resale

# Annex E
(normative)

## CRC for ID fields

The sixteen bits of the CRC shall be computed over the first three bytes of the ID field. The generator polynomial shall be

$$G(x) = x^{16} + x^{12} + x^5 + 1$$

The residual polynomial shall be

$$R(x) = \left( \sum_{i=8}^{i=23} \overline{a}_i x^i + \sum_{i=0}^{i=7} a_i x^i \right) x^{16} \bmod G(x)$$

where $a_i$ denotes a bit of the first three bytes and $\overline{a}_i$ an inverted bit. The highest order bit of the first byte is $a_{23}$.

The sixteen bits $c_k$ of the CRC are defined by

$$R_c(x) = \sum_{k=0}^{k=15} c_k x^k$$

where $c_{15}$ is recorded as the highest order bit of the fourth byte in the ID field.



Copyright International Organization for Standardization
Provided by IHS under license with ISO
No reproduction or networking permitted without license from IHS
Not for Resale

# Annex F
(normative)

# Interleave, CRC, ECC, Resync for the Data field

## F.1 Interleave

### F.1.1 Interleave for 1024-byte sectors

The different bytes shall be designated as follows

| | |
|---|---|
| $D_n$ | are User Data bytes |
| $P_{h,m}$ | are the twelve (FF) bytes |
| $C_k$ | are CRC check bytes |
| $E_{s,t}$ | are ECC check bytes |

These bytes shall be ordered in a sequence $A_n$ in the order in which they shall be recorded on the disk. This order is the same as that in which they are input into the controller. Depending on the value of $n$, these elements are

for $1 \le n \le 1024 : A_n = D_n$

for $1025 \le n \le 1036 : A_n = P_{h,m}$

for $1037 \le n \le 1040 : A_n = D_k$

for $1041 \le n \le 1200 : A_n = E_{s,t}$

where

$$h = int \left[ n - \frac{1025}{4} \right] + 1$$

$m = [\, n - 1025) \bmod 4 \,] + 1$

$k = n - 1036$

$s = [(n - 1041) \bmod 10] + 1$

$$t = int \left[ \frac{n-1041}{10} \right] + 1$$

The notation *int* $[x]$ denotes the largest integer not greater than $x$.

The first three parts of $A_n$ are 10-way interleaved by mapping them onto a two-dimensional matrix $B_{ij}$ with 104 rows and 10 columns. Thus

for $1 \le n \le 1040 : B_{ij} = A_n$

where

$$i = 103 - int \left[ \frac{n-1}{10} \right]$$

$j = (n-1) \bmod 10$

### F.1.2 Interleave for 512-byte sectors

For 512-byte sectors the sequence of bytes shall be denoted by $A'_n$, the other notations shall be as specified in F.1.1. In addition the two (FF) bytes are shown as (FF). Depending on the value of $n$, the elements are

for $1 \le n \le 512 : A'_n = D_n$



Copyright International Organization for Standardization
Provided by IHS under license with ISO
No reproduction or networking permitted without license from IHS
Not for Resale

for $513 \le n \le 524 : A'_n = P_{h,m}$

for $525 \le n \le 526 : A'_n = (FF)$

for $527 \le n \le 530 : A'_n = C_k$

for $531 \le n \le 610 : A'_n = E_{s,t}$

where

$h = int \left[\frac{n-513}{4}\right] + 1$

$m = [(n - 513) \bmod 4] + 1$

$k = n - 526$

$s = [(n - 531) \bmod 5] + 1$

$t = int \left[\frac{n-531}{5}\right] + 1$

The first four parts of $A'_n$ are 5-way interleaved by mapping them onto a two-dimensional matrix $B'_{ij}$ with 106 rows and 5 columns. Thus

for $1 \le n \le 530 : B_{ij} = A'_k$

where

$i = 105\text{-}int \left[\frac{n-1}{5}\right]$

$j = (n - 1) \bmod 5$

## F.2 CRC

### F.2.1 General

The CRC and the ECC shall be computed over the Galois field based on the primitive polynomial

$$G_p(x) = x^8 + x^5 + x^3 + x^2 + 1$$

The generator polynomial for the CRC bytes shall be

$$G_C(x) = \prod_{i=136}^{i=139} (x + \alpha^i)$$

where the element $\alpha^i = (\beta^i)^{88}$, with ß being a primitive root of $G_p(x)$. The value of the $n$-th bit in a byte is the coefficient of the $n$-th power of β, where $0 \le n \le 7$, when ß is expressed on a polynomial basis.

### F.2.2. CRC for 1024-byte sectors

The four check bytes of the CRC shall be computed over the user data and the twelve (FF) bytes.

The information polynomial shall be

$$I_C(x) = \left[ \sum_{i=1}^{i=103} \sum_{j=0}^{j=9} B_{ij} x^i \right] + B_{0,0} x^0$$



Copyright International Organization for Standardization
Provided by IHS under license with ISO
No reproduction or networking permitted without license from IHS
Not for Resale

The contents of the four check bytes $C_k$ of the CRC are defined by the residual polynomial

$$R_c(x) = I_c(x)\, x^4 \mod G_c(x)$$

The storage locations for the coefficients of the polynomial are specified by

$$R_c(x) = \sum_{k=1}^{k=4} C_k x^{4-k}$$

### F.2.3 CRC for 512-byte sectors

The four check bytes of the CRC shall be computed over the user data, the twelve (FF) bytes and the two (FF) bytes. The information polynomial shall be

$$I'_c(x) = \left[ \sum_{i=1}^{i=105} \sum_{j=0}^{j=4} B'_{ij} x^t \right] + B'_{0,0} x^0$$

The contents of the four CRC check bytes shall be calculated as specified in F.2.2, however using polynomial $I'_c(x)$.

## F.3 ECC

The primitive polynomial $G_p(x)$ and the elements $\alpha^i$ and ß shall be as specified in F.2.1. The generator polynomial for the check bytes of the ECC shall be

$$G_E(x) = \prod_{i=120}^{i=135} (x + \alpha^i)$$

This polynomial is self-reciprocal. This property can be used to reduce the hardware size. The initial setting of the ECC register shall be all ZEROs. The bits of the computed check bytes shall be inverted before they are encoded into Channel bits.

### F.3.1 ECC for 1024-byte sectors

The 160 check bytes of the ECC shall be computed over the user bytes, the twelve (FF) bytes and the CRC bytes. The corresponding ten information polynomials shall be:

$$I_{Ej}(x) = \sum_{i=0}^{i=103} B_{ij} x^i$$

where $0 \le j \le 9$.

The contents of the 16 check bytes $E_{s,t}$ for each polynomial $I_{Ej}(x)$ are defined by the residual polynomial

$$R_{Ej}(x) = I_{Ej}(x)\, x^{16} \mod G_E(x)$$

The storage locations for the coefficients of the polynomials are specified by

$$R_{Ej}(x) = \sum_{t=1}^{t=16} E_{j+1,t} x^{16-t}$$



Copyright International Organization for Standardization
Provided by IHS under license with ISO
No reproduction or networking permitted without license from IHS
Not for Resale

### F.3.2 ECC for 512-byte sectors

The 80 check bytes of the ECC shall be computed over the user data bytes, the twelve (FF) bytes, the two (FF) bytes and the CRC bytes. The corresponding 5 information polynomials shall be

$$I'_{Ej}(x) = \sum_{i=0}^{i=105} B'_{ij} x^i$$

where $0 \leq j \leq 4$.

The calculation of the 16 check bytes for each of the information polynomials $I_{Ej}(x)$ shall be carried out as specified in F.3.1.

## F.4 Resync

The Resync fields shall be inserted in the Data field to prevent loss of synchronization and to limit the propagation of errors in the user data. Whilst they are numbered consecutively all Resync fields are identical; they contain the following pattern of Channel bits

0010 0000 0010 0100

For 1024-byte sectors, a field RS$n$ shall be inserted between bytes $A_{20n}$ and $A_{20n+1}$,

where $1 \leq n \leq 59$.

For 512-byte sectors, a field RS$n$ shall be inserted between bytes $A_{15n}$ and $A_{15n+1}$,

where $1 \leq n \leq 40$.

## F.5 Recording sequence for the Data field

The elements of the Data field shall be recorded on the disk according to sequence $A_n$ or $A'_n$, as applicable, immediately following the Sync bytes and with the Resync bytes inserted as specified in F.4.

Figures F.1 and F.2 show in matrix form the arrangement of these elements. The sequence of recording is from left-to-right and top-to-bottom.

SB designates a Sync byte
D designates a user byte
RS designates a Resync byte
P designates one of the twelve (FF) bytes
C designates a check byte for CRC
E designates a check byte for ECC
(FF) designates an (FF) byte

For 1 024-byte sectors (figure D.1) the first 104 rows contain in columns 0 to 9 the user bytes, the twelve (FF) bytes and the CRC check bytes. The next 16 rows contain only the ECC check bytes.

For 512-byte sectors (figure D.2) the first 106 rows contain in columns 0 to 4 the user bytes, the twelve (FF) bytes, the two (FF) bytes and the CRC check bytes. The next 16 rows contain only the ECC check bytes.



Copyright International Organization for Standardization
Provided by IHS under license with ISO
No reproduction or networking permitted without license from IHS
Not for Resale

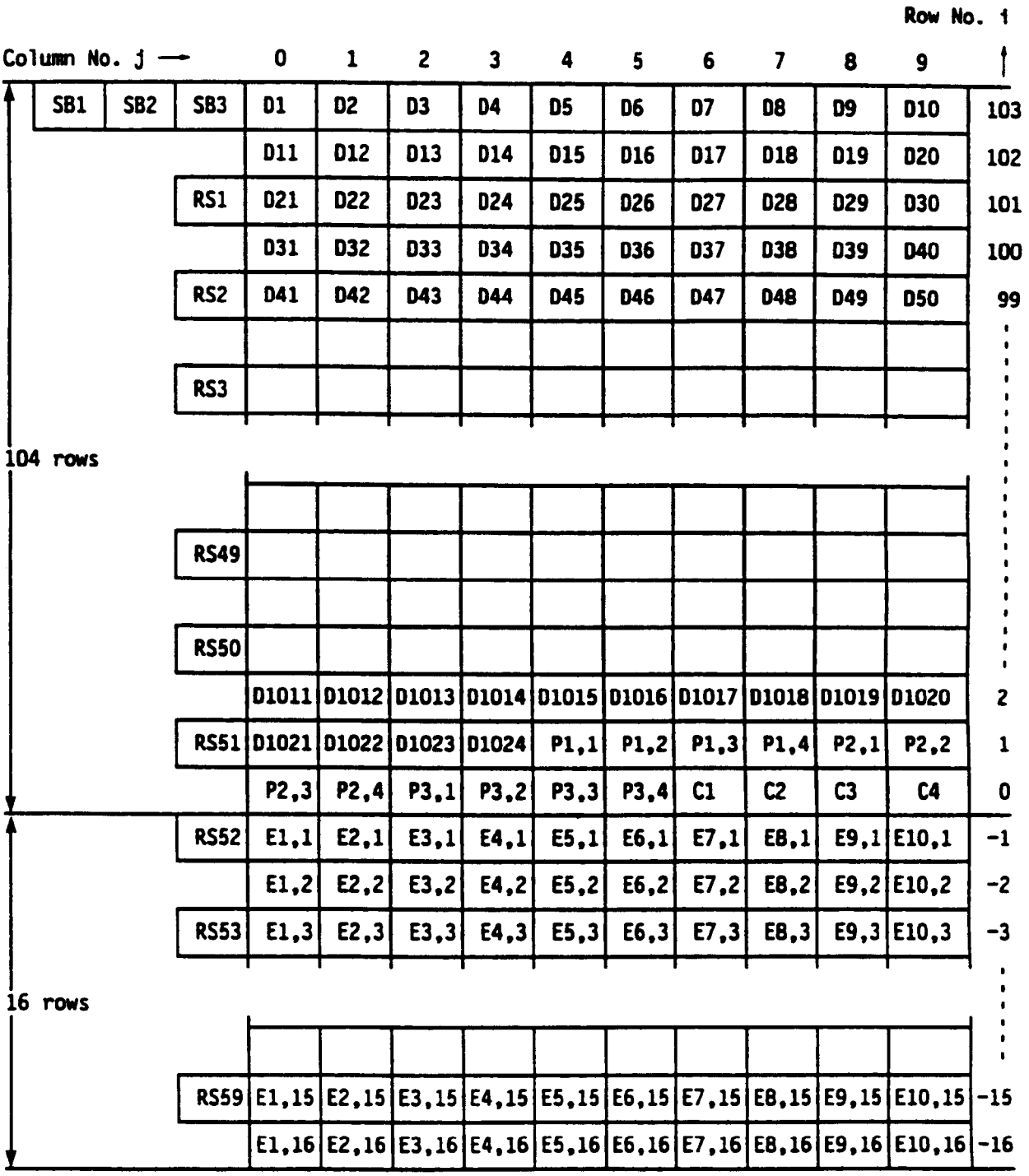


**Figure F.1 - Data field configuration, 1 024-byte sectors, ECC with 10-way interleave**



Copyright International Organization for Standardization
Provided by IHS under license with ISO
No reproduction or networking permitted without license from IHS
Not for Resale

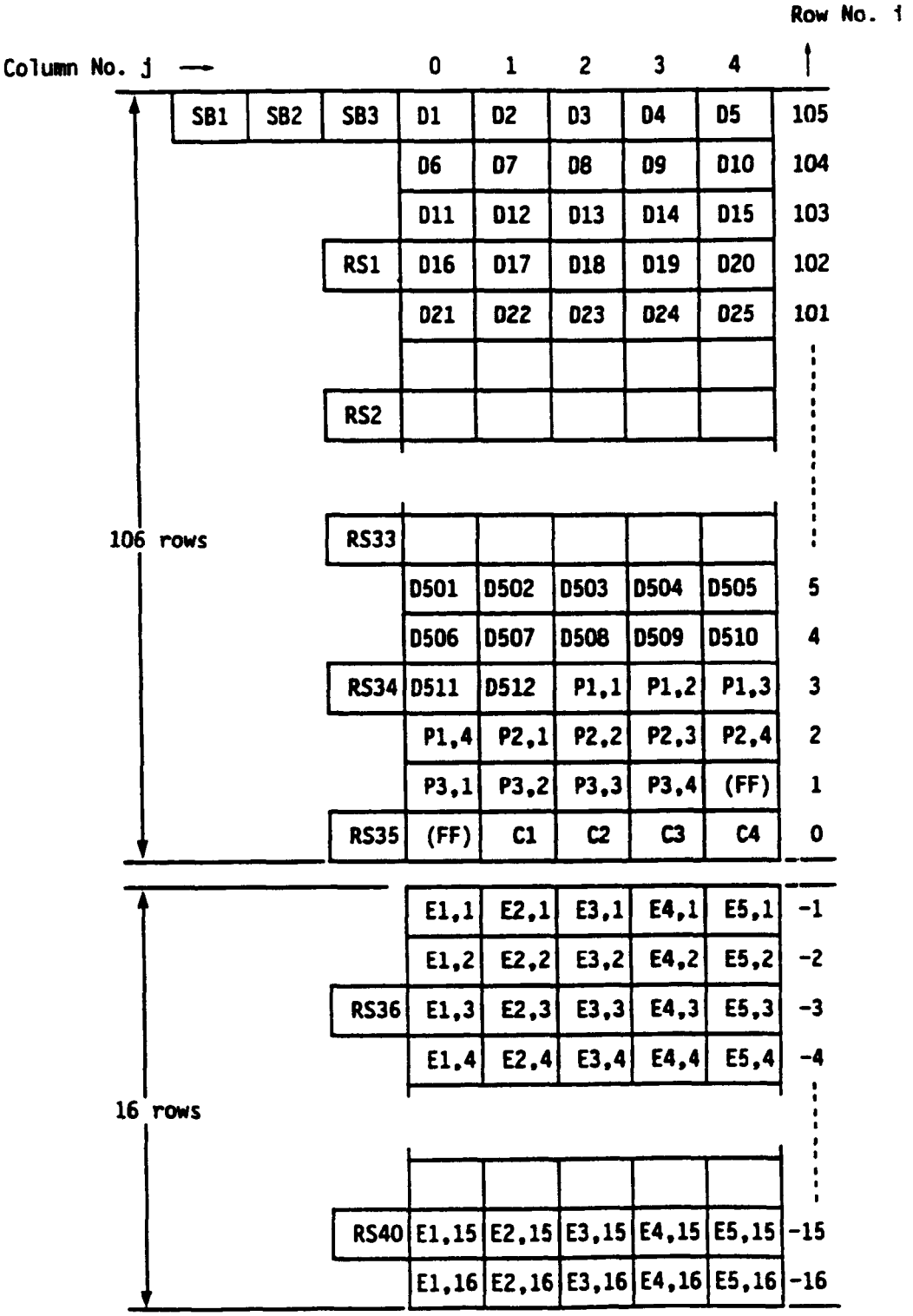


**Figures F.2 - Data field configuration, 512-byte sectors, ECC with 5-way interleave**



Copyright International Organization for Standardization
Provided by IHS under license with ISO
No reproduction or networking permitted without license from IHS
Not for Resale

# Annex G
(informative)

## Sector retirement guidelines

This International Standard assumes that up to 2 048 sectors, for 512-byte sectors, and 1 275 sectors , for 1 024-byte sectors, may be replaced in any of the following cases:

a) A sector does not have at least two reliable Headers.

b) The Sector Mark is not readable.

c) A single defect of more than 30 bytes on a 1 024-byte per sectors is detected (15 bytes on a 512-byte sector).

d) The total number of defective bytes exceeds 40 bytes in 1 024-byte sectors (15 bytes in a 512-byte sector), or 5 bytes in one ECC interleave of a 1 024-byte sector, (3 bytes in a 512-byte sector).

e) The total number of bad bytes within P0 to P11 of a sector exceeds 2.



Copyright International Organization for Standardization
Provided by IHS under license with ISO
No reproduction or networking permitted without license from IHS
Not for Resale

# Annex H
(informative)

## Office environment

Due to their construction and mode of operation, optical disk cartridges have considerable resistance to the effects of dust particles around and inside the disk drive. Consequently it is not generally necessary to take special precautions to maintain a sufficiently low concentration of dust particles.

Operation in heavy concentrations of dust should be avoided, e.g. in a machine shop or on a building site.

Office environment implies an environment in which personnel may spend a full working day without protection and without suffering temporary or permanent discomfort.



Copyright International Organization for Standardization
Provided by IHS under license with ISO
No reproduction or networking permitted without license from IHS
Not for Resale

## Annex J
(informative)

## Transportation

**J.1** As transportation occurs under a wide range of temperature and humidity variations, for differing periods, by many methods of transport and in all parts of the world it is not possible to specify conditions for transportation or for packaging.

**J.2** The form of packaging should be agreed between sender and recipient or, in the absence of such agreement, is the responsibility of the sender. It should take account of the following hazards.

### J.2.1 Temperature and humidity

Insulation and wrapping should be designed to maintain the conditions for storage over the estimated period of transportation.

### J.2.2 Impact loads and vibration

a) avoid mechanical loads that would distort the shape of the cartridge;

b) avoid dropping the cartridge;

c) cartridges should be packed in a rigid box containing adequate shock absorbent material;

d) the final box should have a clean interior and a construction that provides sealing to prevent the ingress of dirt and moisture.



Copyright International Organization for Standardization
Provided by IHS under license with ISO
No reproduction or networking permitted without license from IHS
Not for Resale

# Annex K
(normative)

# Requirements for interchange

## K.1 Equipment for writing

The disk under test shall have been written with arbitrary data by a disk drive for data interchange use in the operating environment.

## K.2 Test equipment for reading

### K.2.1 General

The read test shall be performed on a test drive in the test environment. The rotational frequency of the disk when reading shall be 30,0 Hz ± 0,3 Hz.

The direction of rotation shall be counter-clockwise when viewed from the objective lens.

### K.2.2 Read Channel

#### K.2.2.1 Characteristics of the optical beam

The optical beam used for reading shall comply with the requirements of 9.2. Polarization, linear and parallel to the tracks shall be used.

#### K.2.2.2 Read power

The read power shall comply with the requirements of 21.1.2 a), b) and c).

#### K.2.2.3 Optics

The optical head used for reading shall comply with the requirements of clause 9.

#### K.2.2.4 Read amplifier

The read amplifier after the photo detector in both Channel 1 and 2 shall have a flat response from 100 kHz to 14,8 MHz within ± 1 dB.

#### K.2.2.5 Analog to binary conversion

The signals from the read amplifier shall be converted from analog to binary. The converter for Channel 1 shall work properly for signals from pre-recorded marks with properties as defined in 20.2.2.

The converter for Channel 2 shall work properly for signals from user-written marks with properties as defined in 21.3.

#### K.2.2.6 Binary-to-digital conversion

The binary signal shall be converted to a digital signal according to the rules of the recording code.

### K.2.3 Tracking

The open-loop transfer function for the axial and radial tracking servo shall be



Copyright International Organization for Standardization
Provided by IHS under license with ISO
No reproduction or networking permitted without license from IHS
Not for Resale

$$H = \frac{(2\pi f_0)^2}{c s^2} \times \left( \frac{1 + \frac{sc}{2\pi f_0}}{1 + \frac{s}{2\pi f_0 c}} \right)$$

where $s = i2\pi f$, within such an accuracy that $|1+H|$ does not deviate more than ± 20 % from its nominal value in a bandwidth from 30 Hz to 10 kHz.

The constant c shall be 3. The open-loop 0 dB frequency $f_0$ shall be 1 250 Hz for the axial servo and 1 740 Hz for the radial servo. The open-loop d.c. gain of the axial servo shall be at least 80 dB.

## K.3 Requirements for the digital read signals

A byte error is defined by a byte in which one or more bits have a wrong setting, as detected by the error detection and correction circuit.

**K.3.1** Any sector accepted as valid during the writing process shall not contain byte errors in Channel 2 after the error correction circuit.

**K.3.2** Any sector not accepted as valid during the writing process shall have been rewritten according to the rules for defect management.

NOTE - The rewrite criterion for a sector is given in annex G for the signals in Channel 1 and Channel 2. The rewrite percentage, which reflects the quality of the disk, is limited by 19.2, to a user shall be a matter of agreement between purchaser and supplier.

## K.4 Requirements for the digital servo signals

The focus of the optical beam shall not jump tracks voluntarily.

## K.5 Requirement for interchange

An interchanged optical disk cartridge meets the requirements for interchangeability if it meets the requirements of K.3 and K.4 when it is written on an interchange drive according to K.1 and read on a test drive according to K.2.



Copyright International Organization for Standardization
Provided by IHS under license with ISO
No reproduction or networking permitted without license from IHS
Not for Resale

# Annex L
(normative)

## SCSI Logical Block to Physical Sector Mapping

The logical-to-physical mapping algorithm applied to the optical media specified in this International Standard takes into account that data is recorded with a higher data rate at the OD and that more sectors per revolution are available for data storage at the OD. The diagram in figure L.1 illustrates the mapping algorithm.

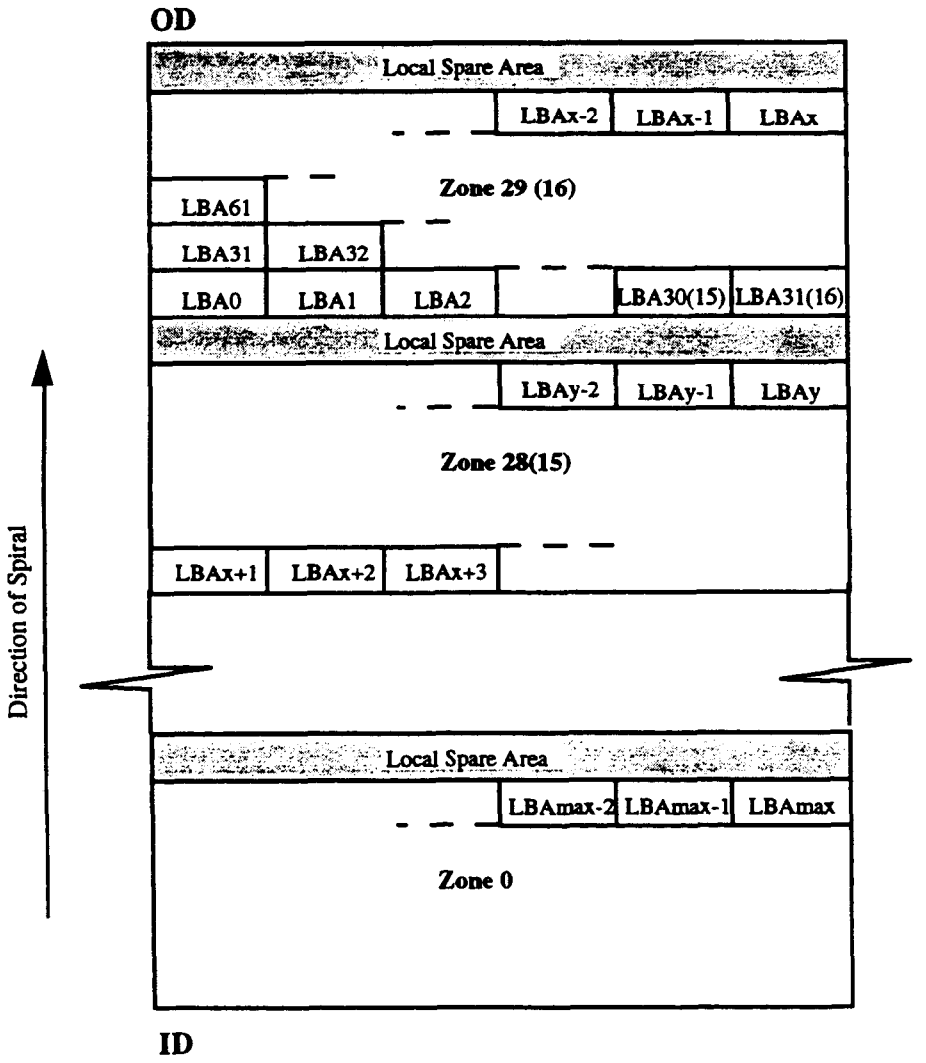


**Figure L.1 - Physical sector address to LBA mapping**



Copyright International Organization for Standardization
Provided by IHS under license with ISO
No reproduction or networking permitted without license from IHS
Not for Resale

**Table L.1 - LBA to Physical Sector Address Mapping for disks with 512-byte sectors**

| | | | |
|---|---|---|---|
| 29 | 0 | (4B90) | 0 |
| 28 | (9B64) | (48F5) | 0 |
| 27 | (13431) | (465A) | 0 |
| 26 | (1CA67) | (43BF) | 0 |
| 25 | (25E06) | (4124) | 0 |
| 24 | (2EF0E) | (3E89) | 0 |
| 23 | (37D7F) | (3BEE) | 0 |
| 22 | (40959) | (3953) | 0 |
| 21 | (4929C) | (36B8) | 0 |
| 20 | (51948) | (341D) | 0 |
| 19 | (59D5D) | (3182) | 0 |
| 18 | (61EDB) | (2EE7) | 0 |
| 17 | (69DC2) | (2C4C) | 0 |
| 16 | (71A12) | (29B1) | 0 |
| 15 | (793CB) | (2716) | 0 |
| 14 | (80AED) | (247B) | 0 |
| 13 | (87F78) | (21E0) | 0 |
| 12 | (8F16C) | (1F45) | 0 |
| 11 | (960C9) | (1CCA) | 0 |
| 10 | (9CD8F) | (1A0F) | 0 |
| 9 | (A37BE) | (1774) | 0 |
| 8 | (A9F56) | (14D9) | 0 |
| 7 | (B0457) | (123E) | 0 |
| 6 | (B66C1) | (FA3) | 0 |
| 5 | (BC694) | (D08) | 0 |
| 4 | (C23D0) | (A6D) | 0 |
| 3 | (C7E75) | (702) | 0 |
| 2 | (CD683) | (537) | 0 |
| 1 | (D2BFA) | (29C) | 0 |
| 0 | (D7EDA) | 1 | 0 |
| Last LBA | (DCF22) | | |

Addresses are nominal and assume no defects for this location



Copyright International Organization for Standardization
Provided by IHS under license with ISO
No reproduction or networking permitted without license from IHS
Not for Resale

**Table L.2 - LBA to Physical Sector Address Mapping for disks with 1 024-byte sectors**

| Zone # | LBA | Track # | Sector # |
|---|---|---|---|
| 16 | 0 | (4991) | 0 |
| 15 | (9735) | (44F8) | 0 |
| 14 | (129D5) | (405F) | 0 |
| 13 | (1B7E0) | (3BC6) | 0 |
| 12 | (24156) | (372D) | 0 |
| 11 | (2C637) | (3294) | 0 |
| 10 | (34683) | (2DBF) | 0 |
| 9 | (3C23A) | (2962) | 0 |
| 8 | (4395C) | (24C9) | 0 |
| 7 | (4ABE9) | (2030) | 0 |
| 6 | (519E1) | (1B97) | 0 |
| 5 | (58344) | (16FE) | 0 |
| 4 | (5E812) | (1265) | 0 |
| 3 | (6484B) | (DCC) | 0 |
| 2 | (6A3EF) | (933) | 0 |
| 1 | (6FAFE) | (49A) | 0 |
| 0 | (74D78) | 1 | 0 |
| Last LBA | (79B5D) | | |

Addresses are nominal and assume no defects for this location

--`,,```,,,,````-`-`,,`,,`,`,,`---

ΩΩ
Copyright International Organization for Standardization
Provided by IHS under license with ISO
No reproduction or networking permitted without license from IHS
Not for Resale

# Annex M
(informative)

## Derivation of the operating climatic environment

This annex gives some background on how some of the conditions of the operating environment in 8.1.2 have been derived.

### M.1 Standard climatic environment classes

The conditions of the ODC operating environment are, with a few exceptions mentioned below, based on parameter values of the IEC standard climatic environment class 3K3 described in the IEC publication 721-3-3 (1987)[1]. This publication defines environmental classes for stationary use of equipment at weather-protected locations.

The IEC class 3K3 refers to climatic conditions which

"... may be found in normal living or working areas, e.g. living rooms, rooms for general use (theatres, restaurants, etc.), offices, shops, workshops for electronic assemblies and other electrotechnical products, telecommunication centres, storage rooms for valuable and sensitive products."

### M.2 Overtemperature considerations

While IEC class 3K3 defines the limits for the room climate only, the ODC operating environment specification in this International Standard takes into consideration also system and drive overtemperature. This means that when inserted in a drive, the ODC will sense a temperature which is above the ambient room temperature. The figures in the operating environment specification have been calculated from the assumption that this overtemperature may be up to 20 °C.

### M.3 Absolute humidity

The introduction of the parameter

absolute humidity [unit: g water/$m^3$ of air]

is very useful when studying overtemperature. When the temperature rises inside a drive, the relative humidity goes down but the absolute humidity remains substantially constant. So, making room for overtemperature in the operating environment specification affects not only the upper temperature limit but also the lower relative humidity limit. The relationship between these parameters is shown in the climatogram (the relative humidity vs. temperature map) of the ODC operating environment, figure M.1.

The absolute humidity restrictions influence the operating environment in the following two ways:

a) Combinations of high temperatures and high relative humidities are excluded. Such combinations could have negative influence on the performance and the life of the ODCs.

b) Combinations of low temperatures and low relative humidities are excluded. Such combinations are very unlikely to occur in world-wide normal office environments.

---

[1] *Classification of environmental conditions - Part 3: Classification of groups of environmental parameters and their severities. Stationary use at weatherprotected locations.*



Copyright International Organization for Standardization
Provided by IHS under license with ISO
No reproduction or networking permitted without license from IHS
Not for Resale

## M.4 Deviations from the IEC standard environment class

Apart from the changes introduced by the overtemperature considerations mentioned above, there are a few more parameter values which are not based on IEC class 3K3. These are:

- Atmospheric pressure

  The IEC 3K3 lower limit of 70 kPa has been extended to 60 kPa. ODCs show no intrinsic pressure sensitivity and 70 kPa excludes some possible markets for ODCs.

- Absolute humidity

  The IEC 3K3 value for the upper limit of 25 $g/m^3$ has been raised to 30 $g/m^3$ in view of some expected operation in portable devices outside the controlled office environment.

- Temperature

  The maximum temperature around the ODC, i.e. room temperature plus overtemperature, has been limited to 55 °C (while IEC 3K3 + 20 °C would have become 60 °C). For ODCs according to this International Standard, however, the 55 °C limit is considered to be a physical limit above which operation (as well as storage) is not safe.

This means that equipment designers may want to ensure adequate cooling inside the drive especially when the room temperature approaches the upper IEC 3K3 limit of 40 °C.

- Further

- The rates of change (the gradients) of temperature and relative humidity are not according to IEC 3K3.

## M.5 Wet bulb temperature specifications

Instead of specifying limits for the absolute humidity, earlier standards for ODCs as well as those for other digital data storage media often used restrictions of the parameter

wet bulb temperature [unit: degree Celsius]

in order to avoid too severe combinations of high temperatures and high relative humidities.

In order to facilitate comparisons between different specifications, figure M.2 shows wet bulb temperatures of interest for the ODC operating environment, as well as for the testing and storage environments. Since wet bulb temperatures vary slightly with the atmospheric pressure, the diagram is valid for the normal pressure of 101,3 kPa.



Copyright International Organization for Standardization
Provided by IHS under license with ISO
No reproduction or networking permitted without license from IHS
Not for Resale

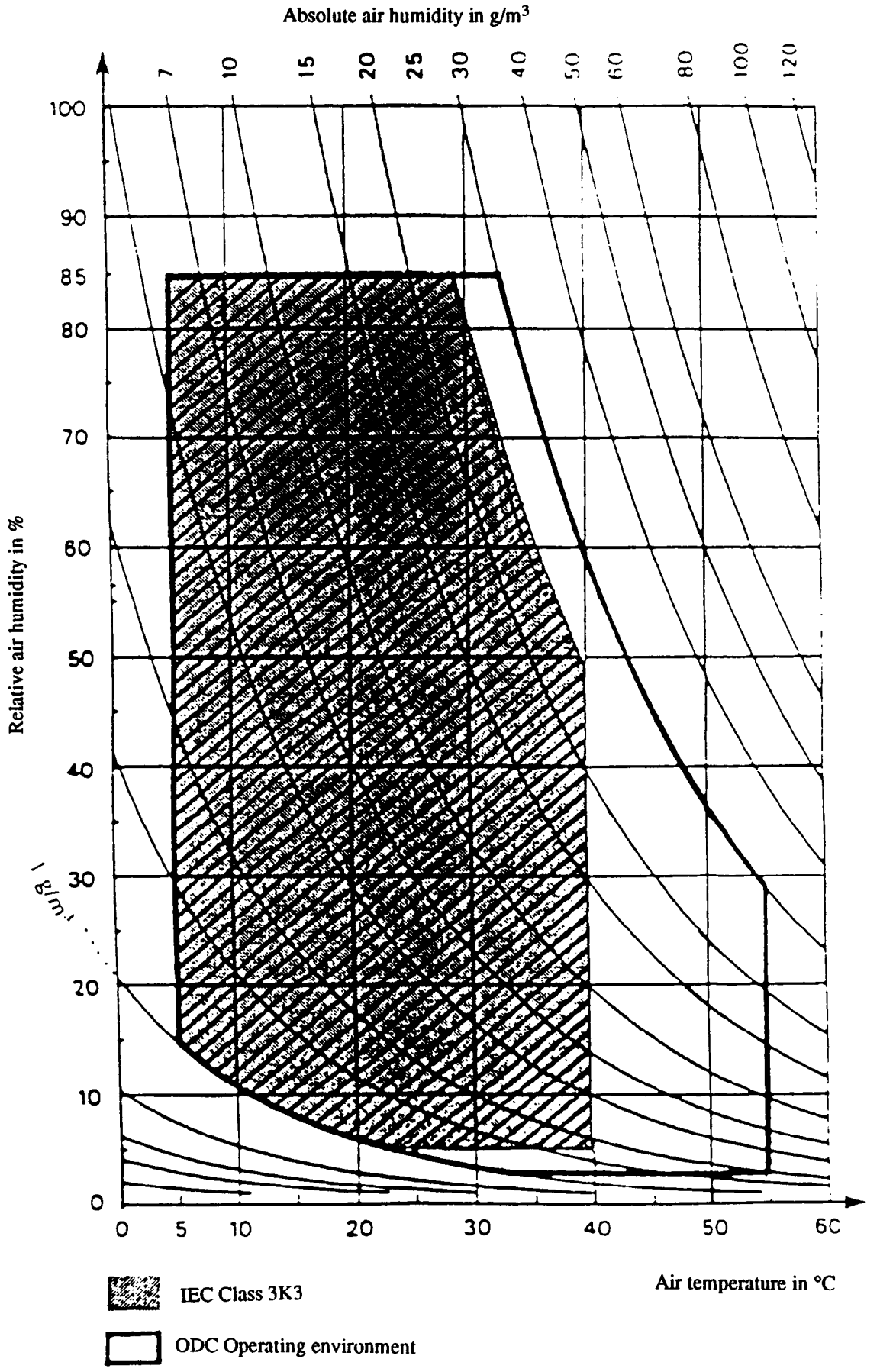


**Figure M.1 - Climatogram of IEC Class 3K3 and the ODC operating environment**



Copyright International Organization for Standardization
Provided by IHS under license with ISO
No reproduction or networking permitted without license from IHS
Not for Resale

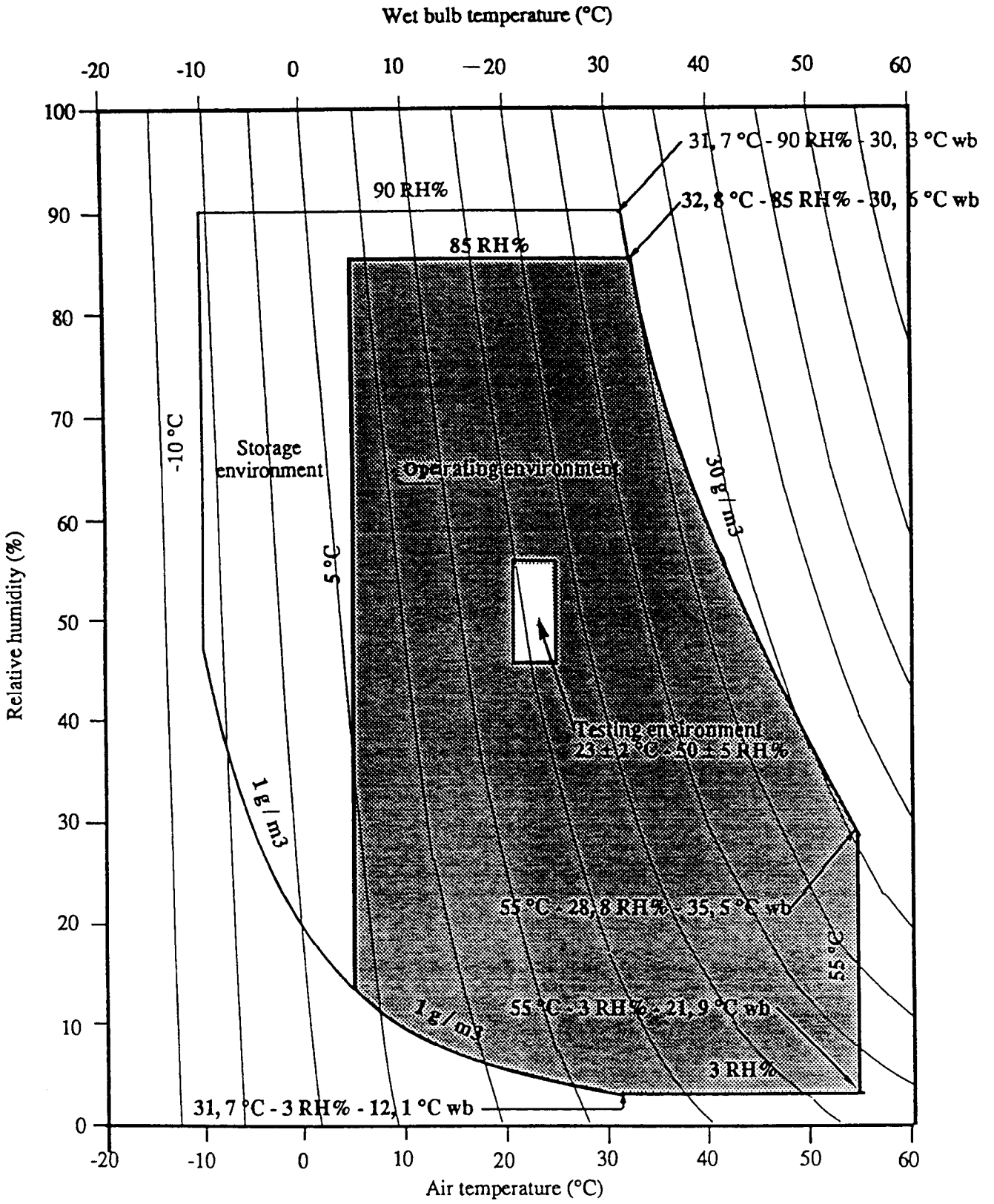


Note - Temperature(°C) - Relative humidity(RH%) - Wet bulb temperature(°C wb)

**Figure M.2 - Wet bulb temperatures of the operating and storage environments**



Copyright International Organization for Standardization
Provided by IHS under license with ISO
No reproduction or networking permitted without license from IHS
Not for Resale

# Annex N
(normative)

# Air cleanliness class 100 000

This classification of air cleanliness is based on a particle count with a maximum allowable number of specified minimum particles per unit volume, and on a statistical average particle size distribution.

## N.1 Definition

The particle count shall not exceed a total of 3 500 000 particles per cubic metre of a size 0,5 µm and larger.

The statistical average particle size distribution is given in figure N.1 Class 100 000 means that 3 500 000 particles per cubic metre of a size of 0,5 µm and larger are allowed, but only 25 000 particles per cubic metre of a size of 5,0 µm and larger.

It should be recognized that single sample distribution may deviate from this curve because of local or temporary conditions. Counts below 350 000 particles per cubic metre are unreliable except when a large number of samplings is taken.

## N.2 Test method

For particles of sizes of the 0,5 µm to 5,0 µm, equipment employing light-scattering principles shall be used. The air in the controlled environment is sampled at a known flow rate. Particles contained in the sampled air are passed through an illuminated sensing zone in the optical chamber of the instrument. Light scattered by individual particles is received by a photo detector which converts the light pulses into electrical current pulses. An electronic system relates the pulse height to particle size and counts the pulses such that the number of particles in relation to particle size is registered or displayed.



Copyright International Organization for Standardization
Provided by IHS under license with ISO
No reproduction or networking permitted without license from IHS
Not for Resale

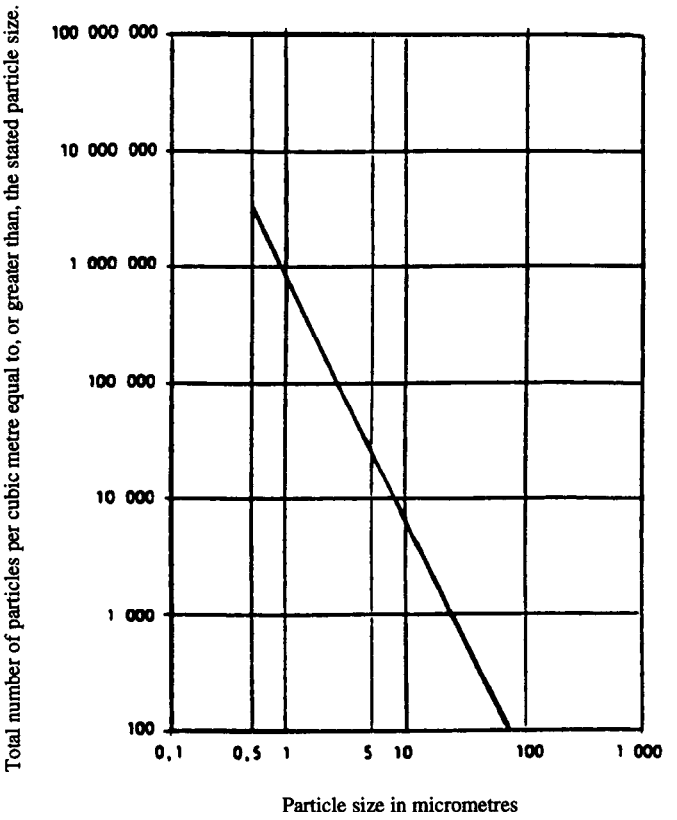


**Figure N.1 - Particle size distribution curve**



Copyright International Organization for Standardization
Provided by IHS under license with ISO
No reproduction or networking permitted without license from IHS
Not for Resale

# Annex P
(informative)

## Guidelines for using ODCs of Type W/O

This annex lists some important points to be observed when using the ODC of Type W/O specified by this International Standard.

i) Read the PEP and/or the SFP when the ODC is inserted into the drive to ascertain the media type, so as to enable and/or disable the appropriate host commands.

ii) Read the DDS when the disk is inserted into the drive to ascertain the disk has been initialized. If it has, disable re-initialization. If it has not been initialized, disable access to user area.

iii) Erase the User Area before initialization is complete. Record the DDS sectors only at the end of initialization to allow for the detection of an incomplete initialization.

iv) Before writing a sector, first determine whether or not it has been already written. This can be ascertained, for example, by inspecting the contents of bytes CD0 to CD11 of the sector data area. If these are set to (FF), disable writing to that sector.

v) Disable SCSI commands that can alter written data such as: Erase and Reassign Block.

vi) Disable the SCSI Write Long command.



Copyright International Organization for Standardization
Provided by IHS under license with ISO
No reproduction or networking permitted without license from IHS
Not for Resale

**UDC 681.327.68**

**Descriptors:** data processing, information interchange, data recording, data recording devices, optical disks, optical disk cartridges, specifications, dimensions, physical properties, mechanical properties, magnetic properties, optical properties, track formats, interchangeability.

Price based on 95 pages

Copyright International Organization for Standardization
Provided by IHS under license with ISO
No reproduction or networking permitted without license from IHS

Not for Resale