4851903 0579552 314

INTERNATIONAL STANDARD

ISO/IEC 13422

First edition
1994-10-15

Information technology — Data interchange on 90 mm Flexible Disk Cartridges 10 MByte capacity using sector servo tracking — ISO Type 304

Technologies de l'information — Échange de données sur cartouches pour disque souple de 90 mm *de diamètre, de 10 Mbyte de capacité, utilisant le servo-pistage sur secteur — Type ISO 304*

Reference number
ISO/IEC 13422:1994(E)

Copyright International Organization for Standardization
Provided by IHS under license with ISO
No reproduction or networking permitted without license from IHS

Not for Resale

Contents

Foreword

Introduction

1	**Scope**	1
2	**Conformance**	1
2.1	Flexible Disk Cartridge	1
2.2	Generating systems	1
2.3	Receiving systems	1
3	**Normative references**	1
4	**Definitions**	2
4.1	Average Signal Amplitude	2
4.2	case	2
4.3	data track	2
4.4	Error Detecting Code	2
4.5	Flexible Disk Cartridge	2
4.6	flux transition frequency	2
4.7	hub	2
4.8	liner	2
4.9	MFM recording mode	2
4.10	Master Standard Reference Flexible Disk Cartridge	3
4.11	peak value	3
4.12	primary identification hole	3
4.13	Reference Field	3
4.14	Secondary Standard Reference Flexible Disk Cartridge	3
4.15	secondary identification hole	3
4.16	sector servo	3
4.17	servo track	3
4.18	shutter	3
4.19	Standard Reference Amplitude	3
4.20	Typical Field	3
4.21	write-inhibit hole	3
5	**Conventions and Notations**	4
5.1	Representation of numbers	4
5.2	Acronyms	4

© ISO/IEC 1994

All rights reserved. Unless otherwise specifed, no part of this publication may be reproduced or utilized in any form or by any means, electronic or mechanical, including photocopying and microfilm, without permission in writing from the publisher.

ISO/IEC Copyright Office · Case postale 56 · CH-1211 Geneve 20 · Switzerland

Printed in Switzerland

Copyright International Organization for Standardization
Provided by IHS under license with ISO
No reproduction or networking permitted without license from IHS

Not for Resale

6	**General description**	5
6.1	Drawings	5
6.2	Main elements	5
6.3	Description	5
6.4	Marking of the Flexible Disk Cartridge	5
7	**General requirements**	6
7.1	Environment and transportation	6
7.1.1	Testing environment	6
7.1.2	Operating environment	6
7.1.3	Storage environment	6
7.1.4	Transportation	6
7.2	Materials	7
7.2.1	Case	7
7.2.2	Liner	7
7.2.3	Disk	7
7.2.4	Hub	7
8	**Dimensional characteristics**	7
8.1	Case	7
8.1.1	Shape	7
8.1.2	Thickness	7
8.1.3	Hub access hole	8
8.1.4	Locating holes	8
8.1.5	Label area	8
8.1.6	Head windows	8
8.1.7	Write-inhibit hole	9
8.1.8	Identification holes	9
8.1.9	Profile of the shutter edge of the case	10
8.1.10	Shutter	10
8.2	Liner	10
8.3	Disk	10
8.3.1	Diameter	10
8.3.2	Thickness	11
8.4	Hub	11
8.4.1	Dimensions	11
8.4.2	Hub orientation holes	11
8.5	Optional handling notches	12
8.6	Interface between cartridge and drive	12
8.7	Compliance	12
9	**Physical characteristics**	12
9.1	Flammability	12
9.2	Coefficient of linear thermal expansion of the disk	13

Copyright International Organization for Standardization
Provided by IHS under license with ISO
No reproduction or networking permitted without license from IHS
Not for Resale

9.3 Coefficient of linear hygroscopic expansion of the disk 13
9.4 Torque 13

9.4.1 Starting torque 13
9.4.2 Running torque 13

10 Magnetic characteristics 13

10.1 Recording area 13
10.2 Track geometry 13

10.2.1 Number of tracks 13
10.2.2 Width of tracks 13
10.2.3 Track location 13
10.2.4 Track number 14

10.3 Functional testing 14

10.3.1 Surface tests 14
10.3.2 Track quality tests 16
10.3.3 Rejection criteria 16

11 General requirements of the data track recording 17

11.1 Method of recording 17
11.2 Track location tolerance of the recorded Flexible Disk Cartridge 17
11.3 Recording offset angle 17
11.4 Density of recording 18
11.5 Flux transition spacing 18
11.6 Average Signal Amplitude 19
11.7 Byte 19
11.8 Sector 19
11.9 Cylinder 19
11.10 Cylinder number 19
11.11 Data capacity of a track 19
11.12 Special MFM recording signals 19
11.13 Error Detecting Code 19
11.14 Defective sector 19

12 Data track layout 20

12.1 Index Gap 20
12.2 Sector Identifier 21

12.2.1 Identifier Mark 21
12.2.2 Address Identifier 22

12.3 Identifier Gap 22
12.4 Data Block 22

12.4.1 Data Mark 23
12.4.2 Data Field 23
12.4.3 EDC 23

12.5 Data Block Gap 23

Copyright International Organization for Standardization
Provided by IHS under license with ISO
No reproduction or networking permitted without license from IHS Not for Resale

13 General requirements of the servo track recording 23

13.1 General 23
13.2 Method of recording 23
13.3 Servo track 24

13.3.1 Number of tracks 24
13.3.2 Width of tracks 24
13.3.3 Track location 24
13.3.4 Track number 24

13.4 Average Signal Amplitude of Servo Data 24
13.5 Fluctuation of signal amplitude of Servo Data 25

14 Servo track layout 25

14.1 Deviation between the data track and the servo track 26
14.2 Servo area timing 26

14.2.1 Servo Identifier 27
14.2.2 Servo Data 27

Annexes

A - Test for compliance 34
B - Measurement of light transmittance 36
C - Method for measuring the effective track width 39
D - Procedure and equipment for measuring flux transition spacing 41
E - Data separators for decoding MFM recording 43
F - EDC implementation 44
G - Cartridge distortion test gauge 45
H - Method of measuring peak shift 46
J - Servo track recording conditions 49
K - Method for measuring fluctuation of the Servo Data amplitude 50
L - Institute for the supply of Secondary Standard Reference Flexible Disk Cartridges 52

Copyright International Organization for Standardization
Provided by IHS under license with ISO
No reproduction or networking permitted without license from IHS Not for Resale

4851903 0579557 9T6

Foreword

ISO (the International Organization for Standardization) and IEC (the International Electrotechnical Commission) form the specialized system for worldwide standardization. National bodies that are members of ISO or IEC participate in the development of International Standards through technical committees established by the respective organization to deal with particular fields of technical activity. ISO and IEC technical committees collaborate in fields of mutual interest. Other international organizations, governmental and non-governmental, in liaison with ISO and IEC, also take part in the work.

In the field of information technology, ISO and IEC have established a joint technical committee, ISO/IEC JTC 1. Draft International Standards adopted by the joint technical committee are circulated to national bodies for voting. Publication as an International Standard requires approval by at least 75 % of the national bodies casting a vote.

International Standard ISO/IEC 13422 was prepared by the Japanese Industrial Standards Committee (as JIS X 6227-1992) and was adopted, under a special "fast-track procedure" by Joint Technical Committee ISO/IEC JTC 1, *Information technology*, in parallel with its approval by national bodies of ISO and IEC.

Annexes A to D, G and H form an integral part of this International Standard. Annexes E, F, J, K and L are for information only.

Copyright International Organization for Standardization
Provided by IHS under license with ISO
No reproduction or networking permitted without license from IHS
Not for Resale

4851903 0579558 832

Introduction

This International Standard specifies the characteristics of 90 mm Flexible Disk Cartridges recorded at 33 157 ftprad using modified frequency modulation recording, on 255 tracks at 16,9 tpmm on each side using sector servo tracking.

This International Standard specifies the physical interchangeability of the unrecorded disk and the format interchangeability of recorded data tracks and servo tracks.

In reference to ISO/IEC 9983, Flexible Disk Cartridges conforming to this International Standard are designated as ISO Type 304.

Copyright International Organization for Standardization
Provided by IHS under license with ISO
No reproduction or networking permitted without license from IHS
Not for Resale

Information technology - Data interchange on 90 mm Flexible Disk Cartridges 10 MByte capacity using sector servo tracking - ISO Type 304

1 Scope

This International Standard specifies the characteristics of 90 mm Flexible Disk Cartridges of 10 MByte formatted capacity, recorded at 33 157 ftprad using modified frequency modulation recording and sector servo tracking on 255 data tracks on each side. Such Flexible Disk Cartridges are identified as ISO Type 304.

It specifies the mechanical, physical and magnetic characteristics of the cartridge, so as to provide physical interchangeability between data processing systems.

It also specifies the method of recording, the quality of the recorded signals, the track layout and the track format of data tracks and servo tracks.

Together with a standard for volume and file structure, for example International Standard ISO 9293, this International Standard provides for full data interchange between data processing systems.

2 Conformance

2.1 Flexible Disk Cartridge

A 90 mm Flexible Disk Cartridge is in conformance with this International Standard if it meets all mandatory requirements specified herein.

2.2 Generating systems

A system generating a Flexible Disk Cartridge for interchange shall be entitled to claim conformance with this International Standard if all recordings on the flexible disk meet the mandatory requirements of this International Standard.

2.3 Receiving systems

A system receiving a Flexible Disk Cartridge for interchange shall be entitled to claim full conformance with this International Standard if it is able to handle any recording made on the flexible disk according to this International Standard.

3 Normative references

The following International Standards contain provisions which, through reference in this text, constitute provisions of this International Standard. At the time of publication, the editions indicated were valid. All standards are subject to revision, and parties to agreements based on this International Standard are encouraged to investigate the possibility of applying the most recent editions of the International Standards listed below. Members of IEC and ISO maintain registers of currently valid International Standards.

Copyright International Organization for Standardization
Provided by IHS under license with ISO
No reproduction or networking permitted without license from IHS Not for Resale

ISO 683-13:1986, *Heat treatable steels, alloy steels and free-cutting steels - Part 13: Wrought stainless steels.*
ISO 8860-1:1987, *Information Processing - Data interchange on 90 mm(3,5 in) flexible disk cartridges using modified frequency modulation recording at 7 958 ftprad on 80 tracks on each side - Part 1:Dimensional, physical and magnetic characteristics.*
ISO 9293:1987, *Information processing - Volume and file structure of flexible disk cartridges for information interchange.*
ISO/IEC 9529-1:1989, *Information processing systems - Data interchange on 90 mm(3,5 in) flexible disk cartridges using modified frequency modulation recording at 15 916 ftprad, on 80 tracks on each side - Part 1:Dimensional, physical and magnetic characteristics.*
ISO/IEC 9983:1989, *Information processing systems - Designation of unrecorded flexible disk cartridges.*
ISO/IEC 10994:1992, *Information technology - Data interchange on 90 mm flexible disk cartridges using modified frequency modulation recording at 31 831 ftprad on 80 tracks on each side - ISO Type 303.*

4 Definitions

For the purposes of this International Standard, the following definitions apply.

4.1 Average Signal Amplitude: The Average Signal Amplitude for a track is the arithmetically averaged value of the output voltages measured peak-to-peak over the whole track.

4.2 case: A protective enclosure including a shutter mechanism, identification holes and a write-inhibit hole.

4.3 data track: A discrete concentric track on which data are recorded in the data sector areas.

4.4 Error Detecting Code: A mathematical computation yielding check bytes used for the detection of errors.

4.5 Flexible Disk Cartridge: A flexible information recording medium consisting of a case and a disk, which accepts and retains information for data processing and associated systems, on both recording surfaces.

4.6 flux transition frequency: The number of flux transitions per second (ftps) used for testing on the rotating disk at a certain speed.

4.7 hub: A centring and referencing device attached to the disk which allows torque to be transmitted to the disk. The hub is attached to the centre of the disk. It ensures centring of the disk on the drive shaft in a unique angular position.

4.8 liner: Suitable material positioned between the case and the disk to provide cleaning action and protection from abrasion.

4.9 MFM recording mode: A recording mode in which a flux transition shall be written at the centre of each bit cell containing a ONE, and at each cell boundary between consecutive bit cells containing ZEROs.

Copyright International Organization for Standardization
Provided by IHS under license with ISO
No reproduction or networking permitted without license from IHS Not for Resale

4.10 Master Standard Reference Flexible Disk Cartridge: A Reference Flexible Disk Cartridge selected as the standard for Reference Fields, signal amplitudes, resolution, peak shift, and overwrite. Track 000 and track 254 on both sides are declared as reference tracks.
The reference tracks are calibrated at 360 rpm.

NOTE 1 - The Master Standard Reference Flexible Disk Cartridge has been established at the Reliability Centre for Electronic Components of Japan (RCJ), 1-1-12 Hachiman-cho, Higashikurume, Tokyo 203, Japan.

4.11 peak value: The crest value of read back output voltage, with 0 V as the reference voltage.

4.12 primary identification hole: A through-hole provided on the case to identify the Flexible Disk Cartridge specified by this International Standard.

4.13 Reference Field: The Typical Field of the Master Standard Reference Flexible Disk Cartridge. There are two Reference Field, one for each side.

4.14 Secondary Standard Reference Flexible Disk Cartridge: A Flexible Disk Cartridge the performance of which is known and stated in relation to that of the Master Standard Reference Flexible Disk Cartridge.

NOTE 2 - Secondary Standard Reference Flexible Disk Cartridges can be ordered under Part Number JRM 6227 from the Reliability Centre for Electronic Components of Japan (RCJ), 1-1-12 Hachiman-cho, Higashikurume, Tokyo 203, Japan, until the year 2004 (see annex L).
It is intended that these be used for calibrating tertiary reference disks for use in routine calibration.

4.15 secondary identification hole: An identification hole provided on the case to identify the Flexible Disk Cartridge specified by this International Standard.

4.16 sector servo: A method of position control, where head positioning information is recorded between sectors, in which data are written and read.

4.17 servo track: A discrete concentric track on which servo data are recorded permanently in the servo sector areas.

4.18 shutter: A device which uncovers the head windows upon insertion of the cartridge into a drive, and automatically covers them upon removal from the drive.

4.19 Standard Reference Amplitude: The Standard Reference Amplitudes (SRAs) are the Average Signal Amplitudes derived from the reference tracks of the Master Standard Reference Flexible Disk Cartridge using the Test Recording Current.
There are four SRAs, two for each side:
SRA-f_1 is the Average Signal Amplitude from a recording written using f_1 at track 000.
SRA-f_2 is the Average Signal Amplitude from a recording written using f_2 at track 254.

4.20 Typical Field: The minimum recording field which, when applied to a Flexible Disk Cartridge, causes an Average Signal Amplitude equal to 95 % of the maximum Average Signal Amplitude when taken as a function of the recording field at the specified track and flux transition density.

4.21 write-inhibit hole: A through-hole with a sliding cover, provided on the case to inhibit writing on the disk when the hole is uncovered.

Copyright International Organization for Standardization
Provided by IHS under license with ISO
No reproduction or networking permitted without license from IHS Not for Resale

4851903 0578646 004

5 Conventions and Notations

5.1 Representation of numbers

- A measured value is rounded off to the least significant digit of the corresponding specified value.
  It implies that a specified value of 40,00 with a positive tolerance of +0,15, and a negative tolerance -0,15 allows a range of measured values from 39,845 to 40,155.

- Letters A to F and digits in parentheses represent numbers in hexadecimal notation.

- The setting of a bit is denoted by ZERO or ONE.

- Numbers in binary notation and bit combinations are represented by strings of ZEROs and ONEs.

- Numbers in binary notation and bit combinations are shown with the most significant bit to the left.

- Negative value of numbers in binary notation are given in TWO's complement.

- In each field the data is recorded so that the most significant byte (byte 0) is recorded first. Within each byte the least significant bit is numbered 1 and is recorded last, the most significant bit (numbered 8 in an 8-bit byte) is recorded first.
  This order of recording applies also to the data input of the Error Detection circuits and to their output.

5.2 Acronyms

ASA	Average Signal Amplitude
EDC	Error Detecting Code
FDC	Flexible Disk Cartridge
FFT	Fast Fourier Transform
ftprad	flux transition per radian
ftps	flux transition per second
MFM	Modified Frequency Modulation
SRA	Standard Reference Amplitude
SVDT	Servo Data
SVID	Servo Identifier

Copyright International Organization for Standardization
Provided by IHS under license with ISO
No reproduction or networking permitted without license from IHS Not for Resale

6 General description

6.1 Drawings

In the enclosed drawings:

- Figure 13 shows Side 0 and enlarged cross-sections through the location and secondary identification holes;
- Figure 14 shows Side 1;
- Figure 15 shows at a larger scale the top part of Side 0 without shutter;
- Figure 16 shows the disk with hub;
- Figure 17 shows the interface between the cartridge and the drive.

6.2 Main elements

The main elements of the Flexible Disk Cartridge are

- the disk,
- the liner,
- the case.

6.3 Description

The case includes a central hole on one side, head windows covered with a shutter on both sides, identification holes and a write-inhibit hole.

The liner is provided between the case and the disk. It comprises two layers of material between which the disk lies.

The disk has a central hole with a metal hub attached.

6.4 Marking of the Flexible Disk Cartridge

The case of the flexible disk shall be clearly marked with the following information:

- Type of flexible disk, type (both sides), mode of recording and number of tracks, ISO Type number
- Year and month of manufacture or mark thereof
- Manufacturer's name or mark

Copyright International Organization for Standardization
Provided by IHS under license with ISO
No reproduction or networking permitted without license from IHS Not for Resale

7 General requirements

7.1 Environment and transportation

7.1.1 Testing environment

Tests and measurements made on the cartridge to check the requirements of this International Standard shall be operated under the following conditions,

temperature: 23°C ± 2°C

relative humidity: 40 % to 60 %

conditioning before testing: 24 h min.

For the tests specified in 10.3 the temperature and relative humidity shall be measured in the air immediately surrounding the cartridge drive. For all other tests the temperature and the relative humidity shall be measured in the air immediately surrounding the cartridge.

The stray magnetic field at any point on the disk surface, including that resulting from the concentrating effect of the magnetic head, shall not exceed 4 000 A/m.

7.1.2 Operating environment

Cartridges used for data interchange shall be capable of operating under the following conditions

temperature: 10°C to 51,5°C

relative humidity: 20 % to 80 %

wet bulb temperature: less than 29°C

The temperature and the relative humidity shall be measured in the air immediately surrounding the cartridge. It is recommended that the rate of change of the temperature should not exceed 20°C per hour.

There shall be no deposit of moisture on or in the cartridge.

The stray magnetic field at any point on the disk surface, including that resulting from the concentrating effect of the magnetic head, shall not exceed 4 000 A/m.

7.1.3 Storage environment

During storage the cartridges shall be kept within the following conditions

temperature: 4°C to 53°C

relative humidity: 8 % to 90 %

The ambient stray magnetic field shall not exceed 4 000 A/m. There shall be no deposit of moisture on or in the cartridge.

NOTE 3 - Cartridges which have been stored at temperatures and humidities exceeding the operating conditions may exhibit degraded performance characteristics. Such cartridges should be subjected to a conditioning period of not less than 24 h within the operating environment prior to use.

7.1.4 Transportation

Responsibility for ensuring that adequate precautions are taken during the transportation shall be with the sender. The cartridge shall be in a protective package free from dust or extraneous matter. It is recommended that a sufficient space exists between cartridge and outer surface of the final container, so that risk of erasure due to stray magnetic fields will be negligible.

Copyright International Organization for Standardization
Provided by IHS under license with ISO
No reproduction or networking permitted without license from IHS Not for Resale

It is recommended that the following conditions are not exceeded

temperature:	-40°C to 60°C
maximum rate of temperature change:	20°C per hour
relative humidity:	8 % to 90 %

There should be no deposit of moisture on or in the cartridge.

7.2 Materials

7.2.1 Case

The case may be constructed from any suitable material such that it meets the requirements of 8.7.

7.2.2 Liner

The material of the liner shall be able to retain dust or debris without damage to the disk.

7.2.3 Disk

The disk may be constructed from any suitable material (e.g. bi-axially oriented polyethylene terephthalate) coated on both sides with a flexible layer of magnetic material (e.g. metal iron particles).

7.2.4 Hub

The hub shall be made of any suitable material (e.g. stainless steel alloy in accordance with ISO 683-13, type 8).

8 Dimensional characteristics

The dimensions of the cartridge are referred to two Reference Axes X and Y. They are two lines in space intersecting at right angles. The plane they define is the Reference Plane XY of the cartridge.

8.1 Case

8.1.1 Shape (figure 13)

The case has a rectangular form, its sides shall be

$L_1 = 94{,}0 \text{ mm} \pm 0{,}3 \text{ mm}$

$L_2 = 90{,}0 \text{ mm} \begin{matrix} +0{,}4 \\ -0{,}1 \end{matrix} \text{ mm}$

The radius of three of its corners shall be

$R_1 = 2{,}0 \text{ mm} \pm 1{,}0 \text{ mm}$

The angle of its fourth corner shall be

$\omega = 45^\circ \pm 2^\circ$

8.1.2 Thickness (figure 14)

In the area extending 8,5 mm from each of the two edges as shown in figure 14, the thickness of the case shall be

$E_1 = 3{,}3 \text{ mm} \pm 0{,}2 \text{ mm}$

When the cartridge is inserted in the test gauge specified in annex G, a force of 0,2 N maximum, applied to the centre of the back edge shall cause the cartridge to pass through the gauge.

The edge radius shall be

$R_2 = 0{,}40 \text{ mm} \pm 0{,}25 \text{ mm}$

Copyright International Organization for Standardization
Provided by IHS under license with ISO
No reproduction or networking permitted without license from IHS Not for Resale

8.1.3 Hub access hole (figure 13)

On Side 0 there shall be a hub access hole the diameter of which shall be

D_1 = 26,50 mm min.

The position of the centre of this hole shall be defined by

L_3 = 40,00 mm ± 0,15 mm

L_4 = 31,00 mm ± 0,15 mm

8.1.4 Locating holes (figures 13 and 15)

8.1.4.1 Primary locating hole

The centre of the primary locating hole shall be at the intersection of Reference Axes X and Y.

Its diameter shall be

D_2 = 3,6 mm ± 0,1 mm

The dimensions of its section (see cross-section A-A in figure 13) shall be

D_3 = 1,5 mm min.

L_8 = 0,2 mm ± 0,1 mm

L_9 = 1,0 mm min.

L_{10} = 2,5 mm min.

8.1.4.2 Secondary locating hole

The centre of the secondary locating hole shall be on Reference Axis X, its distance from Reference Axis Y shall be

L_5 = 80,0 mm ± 0,2 mm

It shall have a substantially rectangular shape. Its short axis shall be (see cross-section B-B in figure 13)

L_6 = 3,6 mm ± 0,1 mm

Its long axis shall be

L_7 = 4,4 mm ± 0,2 mm

The dimensions D_3, L_8, L_9 and L_{10} of the cross-section of the secondary locating hole are as specified in 8.1.4.1.

8.1.5 Label area

8.1.5.1 Side 0 (figure 13)

The locations and dimensions of the label area of Side 0 shall be defined by

L_{11} = 3,5 mm min.

L_{12} = 76,5 mm max.

L_{14} = 60,0 mm min.

8.1.5.2 Side 1 (figure 14)

The locations and dimensions of the label area of Side 1 shall be defined by

L_{11} = 3,5 mm min.

L_{12} = 76,5 mm max.

L_{13} = 20,0 mm min.

8.1.6 Head windows (figure 15)

The locations and dimensions of the two head windows are specified by the same set of dimensions.

Copyright International Organization for Standardization
Provided by IHS under license with ISO
No reproduction or networking permitted without license from IHS Not for Resale

8.1.6.1 Location

The location of the head windows shall be defined by

L_{15} = 12,3 mm min.

L_{16} = 11,5 mm min.

L_{17} = 35,5 mm ± 0,2 mm

8.1.6.2 Dimensions

The width of the head windows shall be

L_{18} = 9,00 mm ± 0,20 mm

The radius of their corners shall be

R_3 = 0,5 mm ± 0,1 mm

R_4 = 0,5 mm ± 0,1 mm

8.1.7 Write-inhibit hole (figures 13 and 14)

8.1.7.1 Location

The centre of the write-inhibit hole shall be specified by L_5 and

L_{19} = 67,75 mm ± 0,25 mm

8.1.7.2 Dimensions

The dimensions of the write-inhibit hole shall be

L_{49} = 3,5 mm min.

L_{50} = 4,0 mm min.

8.1.7.3 Use

The write-inhibit hole is intended for use either with a mechanical switch or with an optical detector so that only when the hole is covered is writing on the disk possible. When covered, the closure device shall not extend outside the Reference Plane XY nor shall it deflect by more than 0,3 mm from the Reference Plane XY inside the case under the action of a force of 3 N.

Also when covered, the light transmittance of the write-inhibit hole area shall not exceed 1 %, when measured with an optical system such as described in annex B.

8.1.8 Identification holes (figures 13, 14 and 15)

The identification holes are provided to distinguish between the Flexible Disk Cartridge by this International Standard from those specified by ISO 8860-1, ISO/IEC 9529-1, and ISO/IEC 10994.

NOTE 4 - As the secondary identification hole is not a through-hole, it is recommended that the identification holes are detected by mechanical means.

8.1.8.1 Primary identification hole

The position of the centre of the primary identification hole shall be on Reference Axis Y. Its distance from Reference Axis X shall be specified by L_{19}.

The dimensions of the primary identification hole shall be

L_{20} = 3,5 mm min.

L_{21} = 4,0 mm min.

Copyright International Organization for Standardization
Provided by IHS under license with ISO
No reproduction or networking permitted without license from IHS
Not for Resale

8.1.8.2 Secondary identification hole

The position of the centre of the secondary identification hole shall be

L_{60} = 7,50 mm ± 0,15 mm

L_{61} = 74,0 mm ± 0,2 mm

Its diameter shall be

D_{10} = 3,5 mm min.

The dimensions of its section (see cross-section C-C in figure 13) shall be specified by L_8 and

L_{62} = 2,5 mm min.

8.1.9 Profile of the shutter edge of the case (figure 15)

The edge on which the shutter is mounted shall have a profile defined by the following dimensions:

L_{22} = 80,0 mm ± 0,2 mm

L_{23} = 76,0 mm ± 0,3 mm

L_{24} = 68,0 mm ± 0,3 mm

L_{25} = 64,50 mm ± 0,35 mm

L_{26} = 57,00 mm ± 0,35 mm

L_{27} = 55,5 mm ± 0,6 mm

L_{28} = 3,5 mm min.

L_{29} = 17,5 mm ± 0,2 mm

L_{30} = 17,00 mm ± 0,15 mm

L_{31} = 15,50 mm ± 0,25 mm

L_{45} = 12,50 mm ± 0,25 mm

α = 45° ± 2°

β = 135° ± 2°

8.1.10 Shutter (figures 14 and 15)

The shutter shall slide upon insertion of the cartridge into the drive so as to uncover the head windows, and close automatically upon removal. The maximum resistance force at the fully open position shall be 1 N, and the minimum resistance force at the fully closed position shall be 0,2 N.

The path along which the shutter can slide is defined by L_{25} and L_{28}.

In the open position of the shutter, the distance from its leading edge to the Reference Axis Y shall be

L_{32} = 53,75 mm ± 1,25 mm

The width of the windows of the shutter shall be

L_{33} = 12,0 mm ± 0,2 mm

NOTE 5 - It is a requirement that the drive shall provide a mechanism whereby correct insertion of the cartridge into the drive causes the shutter to slide so as to uncover the head windows.

8.2 Liner

No part of the liner shall protrude by more than 0,2 mm into the head access windows.

8.3 Disk (figure 16)

8.3.1 Diameter

The diameter of the disk shall be

D_4 = 85,8 mm ± 0,2 mm

Copyright International Organization for Standardization
Provided by IHS under license with ISO
No reproduction or networking permitted without license from IHS Not for Resale

8.3.2 Thickness

The thickness of the disk shall be

$E_2 = 0{,}067 \text{ mm} \pm 0{,}008 \text{ mm}$

8.4 Hub (figure 16)

The hub shall have a central part and a flange.

8.4.1 Dimensions

The diameter of the central part shall be

$$D_5 = 25{,}00 \text{ mm} \begin{matrix} 0{,}00 \\ -0{,}15 \end{matrix} \text{ mm}$$

The diameter of the flange shall be

$D_6 = 29{,}50 \text{ mm max.}$

The distance from the surface of the central part of the hub to the surface of Side 0 of the disk shall be

$L_{34} = 1{,}36 \text{ mm} \pm 0{,}10 \text{ mm}$

when measured at a radius R_7

$R_7 = 14 \text{ mm nominal}$

8.4.2 Hub orientation holes (figure 16)

The hub shall have two orientation holes. The first one at its centre, the second off centre.

8.4.2.1 First orientation hole

The first orientation hole shall have a square form defined by

$L_{35} = 4{,}0 \text{ mm min.}$

The position of the centre of rotation of the disk is defined by

$L_{36} = 1{,}995\ 5 \text{ mm}$

measured from two sides of the hole. The centre of rotation shall be within 0,5 mm of the geometric centre of the disk.

The radius of the four corners of this hole shall be

$R_5 = 1{,}0 \text{ mm} \pm 0{,}3 \text{ mm}$

The angles of two sides of the hole which is in contact with the spindle shaft (see cross-sections D-D and E-E in figure 16) shall be

$$\delta = 90^\circ \begin{matrix} +1^\circ \\ 0^\circ \end{matrix}$$

8.4.2.2 Second orientation hole

The position and dimensions of the sides of the rectangular second orientation hole are referred to two radial Reference Lines A and B that are perpendicular to each other. Their positions shall be specified by

$\gamma = 15^\circ \pm 3^\circ$

The length of the sides of this hole shall be

$L_{37} = 8{,}0 \text{ mm} \pm 0{,}3 \text{ mm}$

$L_{38} = 4{,}5 \text{ mm min.}$

Copyright International Organization for Standardization
Provided by IHS under license with ISO
No reproduction or networking permitted without license from IHS Not for Resale

These sides shall be parallel to Reference Lines A and B, respectively, at a distance;

L_{39} = 2,0 mm ± 0,2 mm

L_{40} = 10,00 mm ± 0,15 mm

The radius of one corner of this hole shall be

R_6 = 2,0 mm ± 0,1 mm

The radius of the three other corners shall be

R_5 = 1,0 mm ± 0,3 mm

8.5 Optional handling notches (figures 13 and 14)

Two handling notches are permitted. If present they shall satisfy the following requirements. Their centres shall be on a line parallel to, and lying above, Reference Axis X at a distance;

L_{41} = 7,50 mm ± 0,15 mm

Their dimensions shall be

L_{42} = 3,0 mm min.

L_{43} = 4,2 mm ± 0,2 mm

Their depth below the Reference Plane XY shall be

L_{44} = 2,0 mm min.

8.6 Interface between cartridge and drive (figure 17)

When the cartridge is inserted into the drive, the drive spindle engages the cartridge as shown in figure 17. The hub is held against the drive spindle by means of a magnetic attraction force. When in this position the distance between the hub surface on Side 0 and plane XY shall be

L_{46} = 0,3 mm nominal

The inside dimensions of the case with the centre plate on Side 1 shall be

D_7 = 7,0 mm min.

E_3 = 1,3 mm ± 0,1 mm

with the exception of the annular zone defined by L_{47} and L_{48} where the thickness shall be

E_4 = 2,5 mm max.

L_{47} shall be sufficiently large to ensure that the circumference of the disk shall not touch the inside edges of the case. The value of L_{47} specified below is a recommended value, therefore it is stated without tolerance.

L_{47} = 22,6 mm

L_{48} = 21,7 mm ± 0,2 mm

8.7 Compliance

When the cartridge is constrained in the manner described in annex A, the cartridge shall be in contact with posts P_1 to P_4.

9 Physical characteristics

9.1 Flammability

The disk, case and liner components shall be made from materials that, if ignited from a match flame, do not continue to burn in a still carbon dioxide atmosphere.

Copyright International Organization for Standardization
Provided by IHS under license with ISO
No reproduction or networking permitted without license from IHS Not for Resale

9.2 Coefficient of linear thermal expansion of the disk

The coefficient of thermal expansion of the disk shall be

$(17 \pm 8) \times 10^{-6}$ per °C.

The range from maximum value to minimum value on the disk surface shall be

8×10^{-6} per °C max.

9.3 Coefficient of linear hygroscopic expansion of the disk

The coefficient of hygroscopic expansion of the disk shall be

(0 to 15) $\times 10^{-6}$ per % of relative humidity.

The range from maximum value to minimum value on the disk surface shall be

5×10^{-6} per % of relative humidity max.

9.4 Torque

9.4.1 Starting torque

The starting torque, without the heads loaded, shall not exceed 0,006 N·m.

9.4.2 Running torque

The torque necessary to turn the disk, without the heads loaded, shall be in the range 0,000 5 N·m to 0,002 5 N·m when the cartridge is in operation at a speed of 360,0 rpm ± 3,6 rpm.

10 Magnetic characteristics

10.1 Recording area

On each side the magnetic properties specified shall be uniform in the recording area, which shall be the area limited by two radii:

20,6 mm max.

42,0 mm min.

10.2 Track geometry

10.2.1 Number of tracks

In the recording area there shall be 255 discrete concentric tracks on each side of disk.

10.2.2 Width of tracks

The width of a recorded track shall be

0,044 mm ± 0,003 mm

The method of measuring effective track width is given in annex C.

10.2.3 Track location

10.2.3.1 Nominal locations

The nominal radius (R_n) of the centrelines of all tracks shall be calculated by using the formula:

R_n nom. = x - 0,059 n

Copyright International Organization for Standardization
Provided by IHS under license with ISO
No reproduction or networking permitted without license from IHS
Not for Resale

where

n is the track number, n = 000 to 254

x = 39,500 mm for Side 0, x = 38,000 mm for Side 1

10.2.3.2 Track location tolerance

For testing purposes the centrelines of the recorded tracks shall be within ± 0,020 mm of the nominal positions, when measured in the testing environment (7.1.1).

10.2.3.3 Line of access of the heads

The line of access of the heads shall be a line parallel to a radial line and spaced 0,35 mm from it (see 11.3).

10.2.4 Track number

The track number shall be a three-digit decimal number (from 000 to 254) for each side. It identifies the tracks consecutively, starting at the outermost track (000).

10.3 Functional testing

For the purpose of the following tests the same drive unit shall be used for writing and reading operations, both for the disk under test and for the Secondary Standard Reference Flexible Disk Cartridge.

The in-contact condition shall be used.

10.3.1 Surface tests

The magnetic properties of both surfaces are defined by the testing requirements given below.

10.3.1.1 Test conditions

Traceability to the Typical Field, SRAs, resolution, peak shift and overwrite of the Master Standard Reference Flexible Disk Cartridge are provided by the calibration factors supplied with each Secondary Standard Reference Flexible Disk Cartridge.

10.3.1.1.1 Flux transition frequency

The disk shall be tested at 360,0 rpm± 3,6 rpm. The test frequencies, expressed in flux transitions per second (ftps), shall be

f_1 = 625 000 ftps ± 625 ftps

f_2 = 1 250 000 ftps ± 1 250 ftps

The frequency(ies) to be used is(are) specified for each test.

10.3.1.1.2 Test Recording Current

The Test Recording Current for track 000 to track 119 shall be (200 ± 2) % of the current which produces the Reference Field at f_1 on track 254. The Test Recording Current for track 120 to track 254 shall be (150 ± 2) % of the current which produces the Reference Field at f_1 on track 254.

10.3.1.2 Typical Field

The Typical Field of the disk under test shall be (100 ± 20) % of the Reference Field. It shall be measured using f_1 on track 254 on both sides.

Copyright International Organization for Standardization
Provided by IHS under license with ISO
No reproduction or networking permitted without license from IHS Not for Resale

10.3.1.3 Average Signal Amplitude

When the disk under test has been recorded with the Test Recording Current, then read back and compared with the Secondary Standard Reference Flexible Disk Cartridge recorded under the same conditions, the Average Signal Amplitude shall be

- on track 000, using f_1: less than 130 % of SRA-f_1
- on track 254, using f_2: more than 85 % of SRA-f_2

This test shall be performed on both sides, using the Secondary Standard Reference Flexible Disk Cartridge.

10.3.1.4 Resolution

After recording on track 254, using the Test Recording Current, the ratio

$$\frac{\text{ASA-}f_2}{\text{ASA-}f_1} \times 100\ \%$$

shall be (100 ± 15) % of the same ratio for the Master Standard Reference Flexible Disk Cartridge.

This test shall be performed on both sides.

10.3.1.5 Peak shift

The average peak shift measured on the disk cartridge under test, using the method specified in annex H, shall be (100 ± 37) % of that of the Master Standard Reference Flexible Disk Cartridge when measured on the Secondary Standard Reference Flexible Disk Cartridge under the same conditions. This test shall be performed on track 254 on both sides.

10.3.1.6 Overwrite

The overwrite ratio

$$\frac{\text{Residual Average Signal Amplitude at } f_1 \text{ after overwrite using } f_2}{\text{Average Signal Amplitude after first recording using } f_1}$$

shall not exceed 125 % of the value of the same ratio for the Master Standard Reference Flexible Disk Cartridge for each side, when measured according to the following procedure.

- Erase track 000 using direct current, then record at f_1 for one revolution on track 000 using the Test Recording Current.
- Read back and note the Average Signal Amplitude of f_1.
- Overwrite with f_2 for one revolution.
- Read back and note the Residual Average Signal Amplitude of f_1.
- Reading shall be taken with a frequency-selective voltmeter.

10.3.1.7 Modulation

Modulation shall be

$$\frac{A - B}{A + B} \times 100\ \%$$

where

A is the maximum value of the average values of the amplitude modulated output voltage of about 2 000 consecutive flux transitions in a track. Output voltage shall be measured peak-to-peak, in voltage.

B is the minimum value of the average values of the amplitude modulated output voltage of about 2 000 consecutive flux transitions in a track. Output voltage shall be measured peak-to-peak, in voltage.

On track 000 to track 254 using f_2, modulation shall be less than 10 %. This test shall be performed on both sides.

Copyright International Organization for Standardization
Provided by IHS under license with ISO
No reproduction or networking permitted without license from IHS Not for Resale

10.3.2 Track quality tests

These tests shall apply to all 255 tracks at the defined positions on each side. The appropriate Test Recording Current shall be used.

10.3.2.1 Missing pulse

Write a track with f_2 and measure the Average Signal Amplitude. Any playback signal which, when measured base-to-peak, is less than 65 % of half the Average Signal Amplitude of the track, shall be a missing pulse.

10.3.2.2 Extra pulse

Write a track with f_2 and measure the Average Signal Amplitude. Then erase the track for one revolution with a direct current equal to the quiescent value (Iq) of the Test Recording Current applied to the head (see figure 1). Any playback signal which, when measured base-to-peak, exceeds 20 % of half the Average Signal Amplitude shall be an extra pulse.

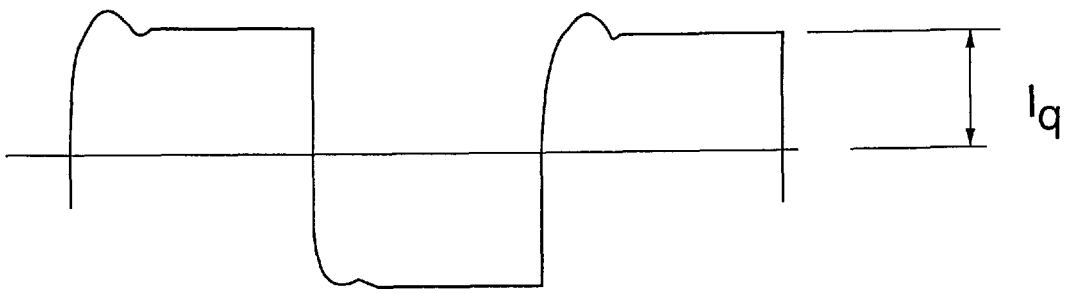

Figure 1 - Quiescent value of Test Recording Current

10.3.3 Rejection criteria

10.3.3.1 Requirement for tracks

A defective position is a position where missing and/or extra pulses are detected on three consecutive passes.

10.3.3.1.1 Tracks 000 to 003

As initially received from the medium supplier, the cartridge shall have no defects for track 000 to track 003.

10.3.3.1.2 Tracks 004 to 254

As initially received from the medium supplier, the cartridge shall have no more than one defect on each track, and it is recommended that the total number of the defects on both sides should be no more than 10, for track 004 to track 254.

10.3.3.1.3 Guard areas out of track -001 and track 255

These areas shall comprise a 7-track wide band on the outer side of track -001 and a 3-track wide band on the inner side of track 255, and it is recommended that the total number of the defects on both sides should be no more than 100 in these areas.

Copyright International Organization for Standardization
Provided by IHS under license with ISO
No reproduction or networking permitted without license from IHS Not for Resale

4851903 0578659 762

10.3.3.2 Rejected cartridge

A cartridge which does not meet the requirements of 10.3.3.1 shall be rejected.

11 General requirements of the data track recording

11.1 Method of recording

The method of recording shall be Modified Frequency Modulation (MFM).

11.2 Track location tolerance of the recorded Flexible Disk Cartridge

Within the testing environment specified in 7.1.1 the centrelines of the recorded data tracks shall be within ± 0,028 mm of the nominal track locations.

11.3 Recording offset angle (figure 2)

At the instant of writing or reading a magnetic transition, the transition shall have an angle of:

$$\theta = \arcsin \frac{d}{Rn} \pm 0^\circ\ 15'$$

where Rn is the radius through that transition in millimeters (see 10.2.3.1), and d = 0,35 mm.

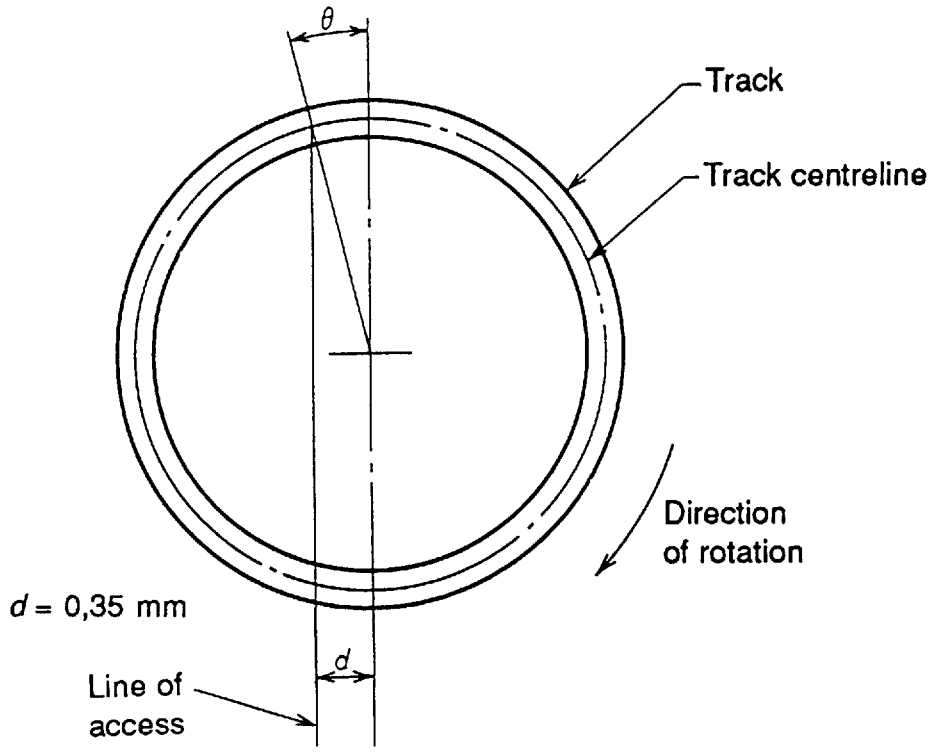

Figure 2 - Recording offset angle

Copyright International Organization for Standardization
Provided by IHS under license with ISO
No reproduction or networking permitted without license from IHS
Not for Resale

11.4 Density of recording

11.4.1 The nominal density of recording shall be 33 157 ftprad. The resulting nominal bit cell length is 30,16 μrad.

11.4.2 The long-term average bit cell length shall be the average bit cell length measured over a sector. It shall be within $\pm$ 1,1 % of the nominal bit cell length.

11.4.3 The short-term average bit cell length, referred to a particular bit cell, shall be the average of the lengths of the preceding eight bit cells. It shall be within $\pm$ 8 % of the long-term average bit cell length.

11.5 Flux transition spacing (figure 3)

The instantaneous spacing between flux transition is influenced by the reading and writing process, the bit sequence (pulse crowding effects) and other factors. The locations of the transitions are defined as the locations of the peaks in the signal when reading. Tests shall be carried out according to annexes D and E.

11.5.1 The spacing between the flux transitions of a sequence of ONEs shall be between 80 % and 120 % of the short-term average bit cell length.

11.5.2 The spacing between the flux transition for a ONE and that between two ZEROs preceding or following it shall be between 130 % and 165 % of the short-term average bit cell length.

11.5.3 The spacing between the flux transitions of two ONEs surrounding a ZERO shall be between 185 % and 225 % of the short-term average bit cell length.

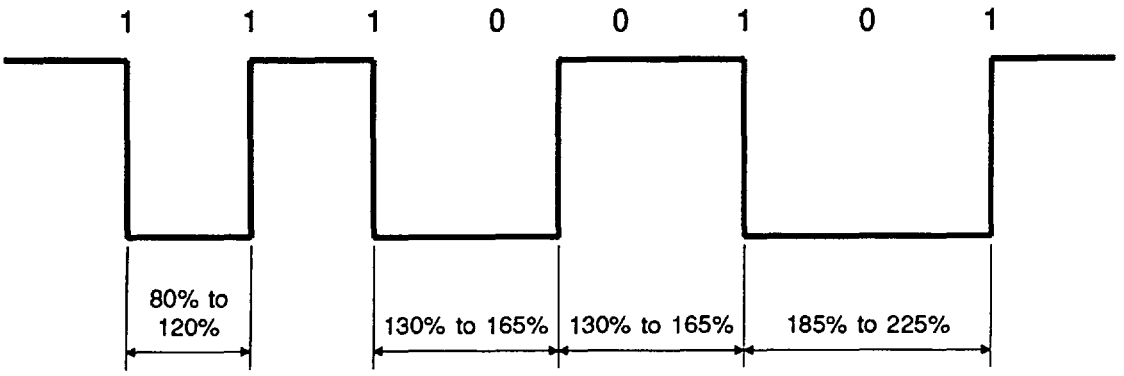

Figure 3 - Flux transition spacings

Copyright International Organization for Standardization
Provided by IHS under license with ISO
No reproduction or networking permitted without license from IHS
Not for Resale

11.6 Average Signal Amplitude

For each side of the disk the Average Signal Amplitude on any track of the interchanged Flexible Disk Cartridge shall be less than 160 % of SRA-f_1 and more than 40 % of SRA-f_2.

11.7 Byte

A byte is an ordered set of eight bits, identified by B_1 to B_8, where B_8 is the most significant bit.

11.8 Sector

The track shall contain 39 sectors. Each sector contains 512 bytes.

11.9 Cylinder

A pair of tracks, one on each side, having the same track number.

11.10 Cylinder number

The cylinder number shall be a three-digit number identical with the track number of the tracks of the cylinder.

11.11 Data capacity of a track

The data capacity of a track shall be 19 968 bytes.

11.12 Special MFM recording signals

- erase-byte This shall be defined as the area having no flux transition written by the direct current (Iq) (see figure 1), estimated by a byte length.
- (A1)* byte A byte set to (A1)* shall be used for detecting the Identifier Mark or the Data Mark. In this byte the boundary transition between the bit B_3 and B_4 is missing as shown in figure 4.

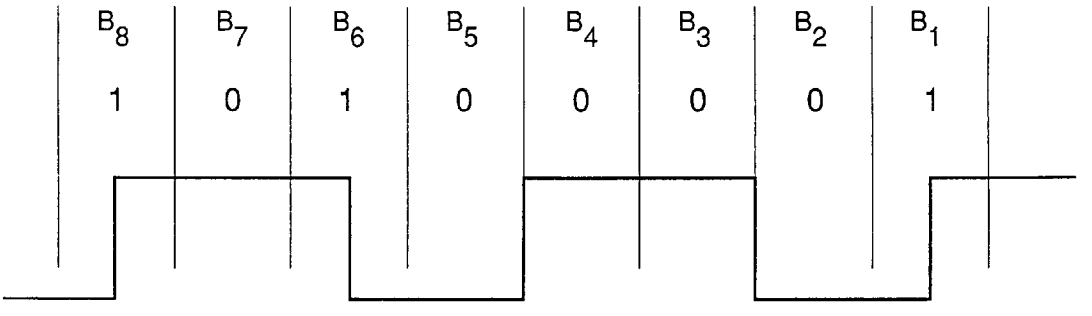

Figure 4 - Flux transition chart of (A1)* byte

11.13 Error Detecting Code

The two EDC bytes are hardware-generated by shifting serially the relevant bits, specified later for each part of the track, through a 16-bit shift register described by the generator polynomial:

$$X^{16} + X^{12} + X^5 + 1$$

See also annex F.

11.14 Defective sector

A sector in which EDC is incorrect shall be a defective sector. The number of defective sectors shall be no more than one per track and shall be no more than ten in all tracks on both sides.

No defective sector shall be permitted in cylinder 000 to cylinder 003.

Copyright International Organization for Standardization
Provided by IHS under license with ISO
No reproduction or networking permitted without license from IHS Not for Resale

12 Data track layout

During formatting the rotational speed of the disk shall be

- averaged Index-to-Index: 360,0 rpm ± 3,6 rpm
- averaged over a sector: 360,0 rpm ± 3,6 rpm

After formatting, there shall be 39 sectors on each track. The layout of each track shall be as shown in figure 5.

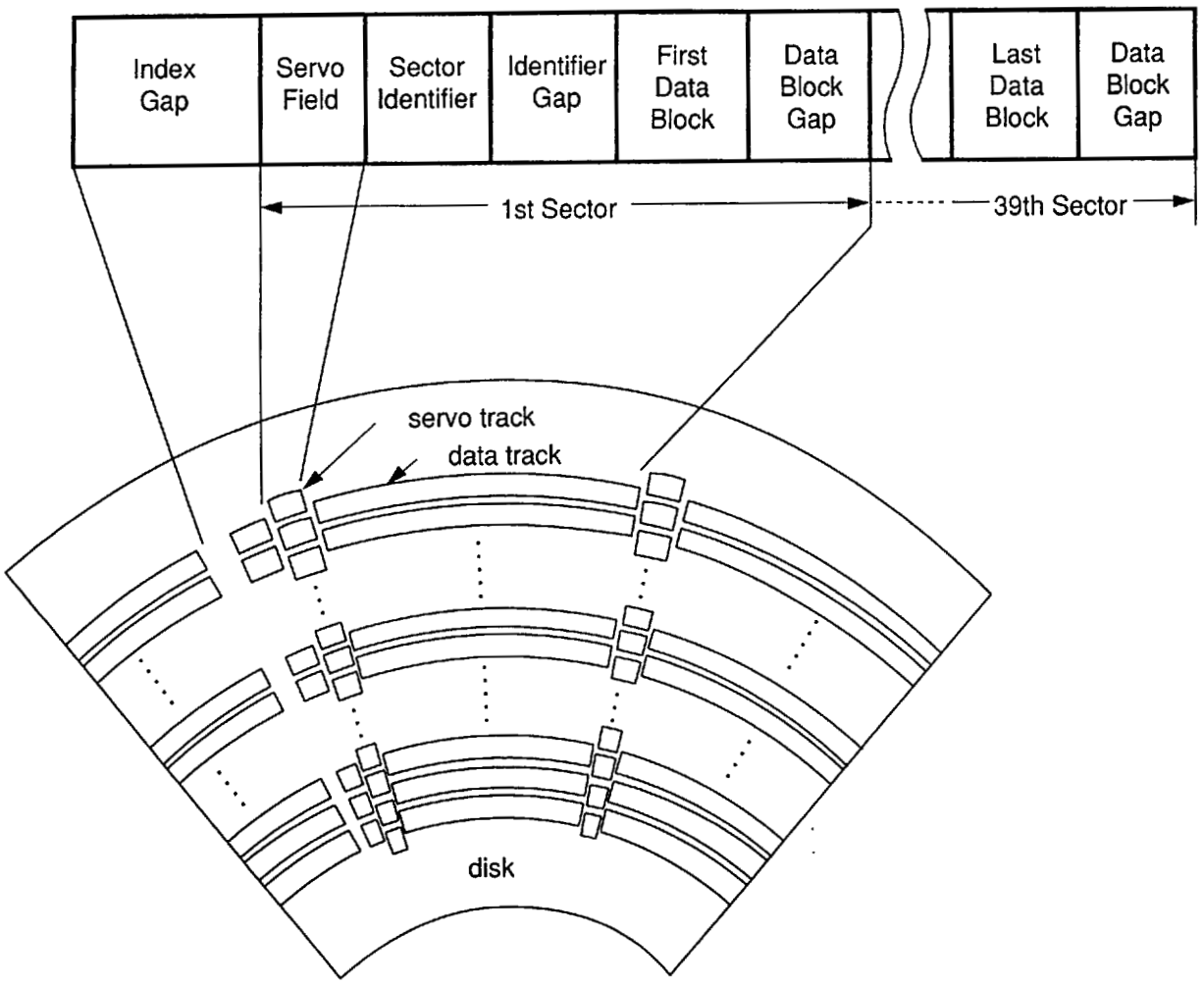

Figure 5 - Track layout

NOTE 6 - The servo fields are recorded on the servo track. The other fields of the sector and Index Gap are recorded on the data track.

12.1 Index Gap

The Index Gap commences where the leading edge of the Index pulse is detected.

At nominal density, this field shall comprise 48,5 bytes:

10,5 erase-bytes nominal

25 bytes set to (4E)

13 erase-bytes nominal

The layout of Index Gap shall be as shown in figure 6.

Copyright International Organization for Standardization
Provided by IHS under license with ISO
No reproduction or networking permitted without license from IHS Not for Resale

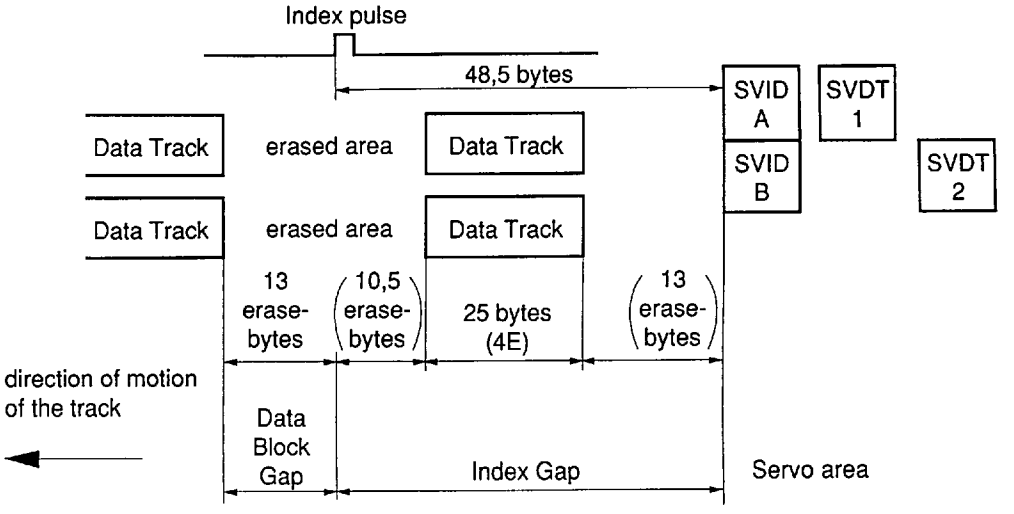

Figure 6 - Index Gap layout

12.2 Sector Identifier

The layout of this field shall be as shown in figure 7.

Sector Identifier							
Identifier Mark			Address Identifier				
			Track Address		Sector Number		EDC
			C	Side	S		
12 bytes (00)	3 bytes (A1)*	1 byte (FE)	1 byte	1 byte (00) or (01) or (80) or (81)	1 byte	1 byte (02)	2 bytes

Figure 7 - Sector Identifier

12.2.1 Identifier Mark

This field shall comprise 16 bytes:

12 bytes set to (00)

3 bytes set to (A1)*

1 byte set to (FE)

Copyright International Organization for Standardization
Provided by IHS under license with ISO
No reproduction or networking permitted without license from IHS
Not for Resale

12.2.2 Address Identifier

This field shall comprise 6 bytes.

12.2.2.1 Track Address

This field shall comprise 2 bytes.

a) Cylinder number

This field shall specify in binary notation the cylinder number from 000 for the outermost cylinder to 254 for the innermost cylinder.

b) Side number (Side)

This field shall specify the side of the disk. On Side 0, it shall be set to (00) on all tracks. On Side 1, it shall be set to (01) on all tracks.

If the sector is defective this byte shall be set to (80) on Side 0, and to (81) on Side 1.

12.2.2.2 Sector number (S)

The 3rd byte shall specify in binary notation the sector number from 01 for the 1st sector to 39 for the last sector. The sectors may be recorded in any order of their sector numbers.

However, if a defective sector occurs it shall be allocated the sector number 39. The following valid sector shall continue the sequence of sector numbers from the sector preceding the defective sector.

12.2.2.3 4th Byte

The 4th byte shall always be set to (02).

12.2.2.4 EDC

These two bytes shall be generated as defined in 11.13 using the bytes of the Sector Identifier starting with the first byte set to (A1)* (see 12.2.1) of the Identifier Mark and ending with the 4th byte (see 12.2.2.3) of the Address Identifier. If the EDC is incorrect the sector is defective. The relevant standard ISO 9293 for file structure and volume specifies the handling of defective sectors.

12.3 Identifier Gap

This field shall comprise 22 initially recorded bytes set to (4E). These bytes may have become ill-defined due to overwriting.

12.4 Data Block

The layout of this field shall be as shown in figure 8.

Data Block				
Data Mark			Data Field	EDC
12 bytes (00)	3 bytes (A1)*	1 byte (FB)	512 bytes	2 bytes

Figure 8 - Data Block

Copyright International Organization for Standardization
Provided by IHS under license with ISO
No reproduction or networking permitted without license from IHS Not for Resale

12.4.1 Data Mark

This field shall comprise 16 bytes:

12 bytes set to (00)

3 bytes set to (A1)*

1 byte set to (FB)

12.4.2 Data Field

This field shall comprise 512 bytes. If it comprises less than 512 data bytes, the remaining bytes shall be set to (00).

12.4.3 EDC

These two bytes shall be generated as defined in 11.13 using the bytes of the Data Block starting with the first byte set to (A1)* of the Data Mark and ending with the last byte of the Data Field.

If the EDC is incorrect the sector is defective. The relevant standard ISO 9293 for file structure and volume specifies the handling of defective sectors.

12.5 Data Block Gap

This field shall comprise first initially recorded one byte set to (4E) and 13 erase-bytes. These bytes may have become ill-defined due to overwriting. The Data Block Gap is recorded after each Data Block and it precedes the following Sector Identifier. After the last Data Block, it precedes the Index Gap.

The last Data Block Gap of the last Data Block is written even if Index occurs.

13 General requirements of the servo track recording

13.1 General

The sector servo recording method is a recording technique that records the track positioning signals of the magnetic head of a disk drive between the sectors in which servo data are recorded. The track positioning information for the magnetic head is recorded on the servo track, which is located 1/2 track pitch away from each data track.

Clause 13 specifies the servo track recording method and clause 14 the track format (see figure 10).

13.2 Method of recording

The Servo Identifier (SVID) signal shall be recorded at the two flux transition frequencies, specified in figure 9, alternately on the servo tracks as shown in figure 10. The Servo Data (SVDT) signal shall be recorded at the two frequencies f_1 and f_2 on the servo tracks.

The details of the SVDT signals are shown in 14.2.2.

Format	SVID A	SVID B	SVDT
Frequency (ftps)	250 000	125 000	625 000 and 1 250 000

Figure 9 - Servo signal flux transition frequencies

NOTE 7 - Servo track recording conditions are shown in annex J.

Copyright International Organization for Standardization
Provided by IHS under license with ISO
No reproduction or networking permitted without license from IHS Not for Resale

13.3 Servo track

13.3.1 Number of tracks

In the recording area there shall be 264 discrete concentric servo tracks on each side of the disk.

13.3.2 Width of tracks

The width of a recorded servo track shall be

$$0{,}059 \text{ mm} \begin{matrix} +\,0{,}003 \\ -\,0{,}004 \end{matrix} \text{ mm}$$

The method of measuring effective servo track width is given in clause C.2 of annex C.

13.3.3 Track location

13.3.3.1 Nominal locations

The nominal radius (R_n) of the centrelines of all servo tracks shall be calculated by using the formula.

$$R_n \text{ nom.} = x - 0{,}059\ n$$

where

n is the servo track number, n = -6,5 to +256,5

x = 39,500 mm for Side 0, x = 38,000 mm for Side 1

13.3.3.2 Track location tolerance

Within the testing environment specified in 7.1.1 the centrelines of the recorded servo tracks shall be within $\pm$ 0,028 mm of the nominal track locations.

13.3.3.3 Distance of servo track and space width

- Distance between centrelines of adjacent servo tracks shall be 0,059 mm$\pm$ 0,004 mm.
- The space width between two radially adjacent Servo Data shall be within 0,003 mm.
- The radial offset between centrelines of servo tracks with the same number on Side 0 and Side 1 shall be 1,500 mm $\pm$ 0,010 mm.

The method of measuring distance between centrelines of adjacent tracks and space width is given in clause C.2 of annex C.

13.3.3.4 Eccentricity of the centrelines of servo tracks

The eccentricity of the centrelines of servo tracks in the radial direction shall be within 0,005 mm.

13.3.4 Track number

The servo track numbering identifies the tracks consecutively from the outermost track to the innermost track beginning with -6,5 to +256,5 (see figure 10).

13.4 Average Signal Amplitude of Servo Data

When two radially adjacent Servo Data have equal outputs, the Average Signal Amplitude (f_1) of the Servo Data on any servo track for one revolution shall be less than 80% of SRA-f_1 and more than 30% of SRA-f_2 for each side.

Copyright International Organization for Standardization
Provided by IHS under license with ISO
No reproduction or networking permitted without license from IHS Not for Resale

13.5 Fluctuation of signal amplitude of Servo Data

The displacement of the head due to the variations of the signal amplitude of Servo Data shall be measured using the equivalent displacement of the head when it moves in the radial direction. The signal amplitude for one revolution (39 sectors) of a track having two radially adjacent Servo Data of equal outputs shall be measured on each sector. The Fast Fourier Transform (FFT) of the result shall then be obtained. Only the total value of the higher order eccentricity components shall be measured, ignoring the first and second order eccentricity components. This value shall be within ± 0,001 2 mm.

The method of measurement is given in annex K.

14 Servo track layout

The servo track layout shall be as shown in figure 10. Servo signals shall be recorded on servo track -6,5 to servo track +256,5. Servo signals shall be composed of either an A-type Servo Identifier (SVID A) or a B-type Servo Identifier (SVID B) and Servo Data (SVDT).

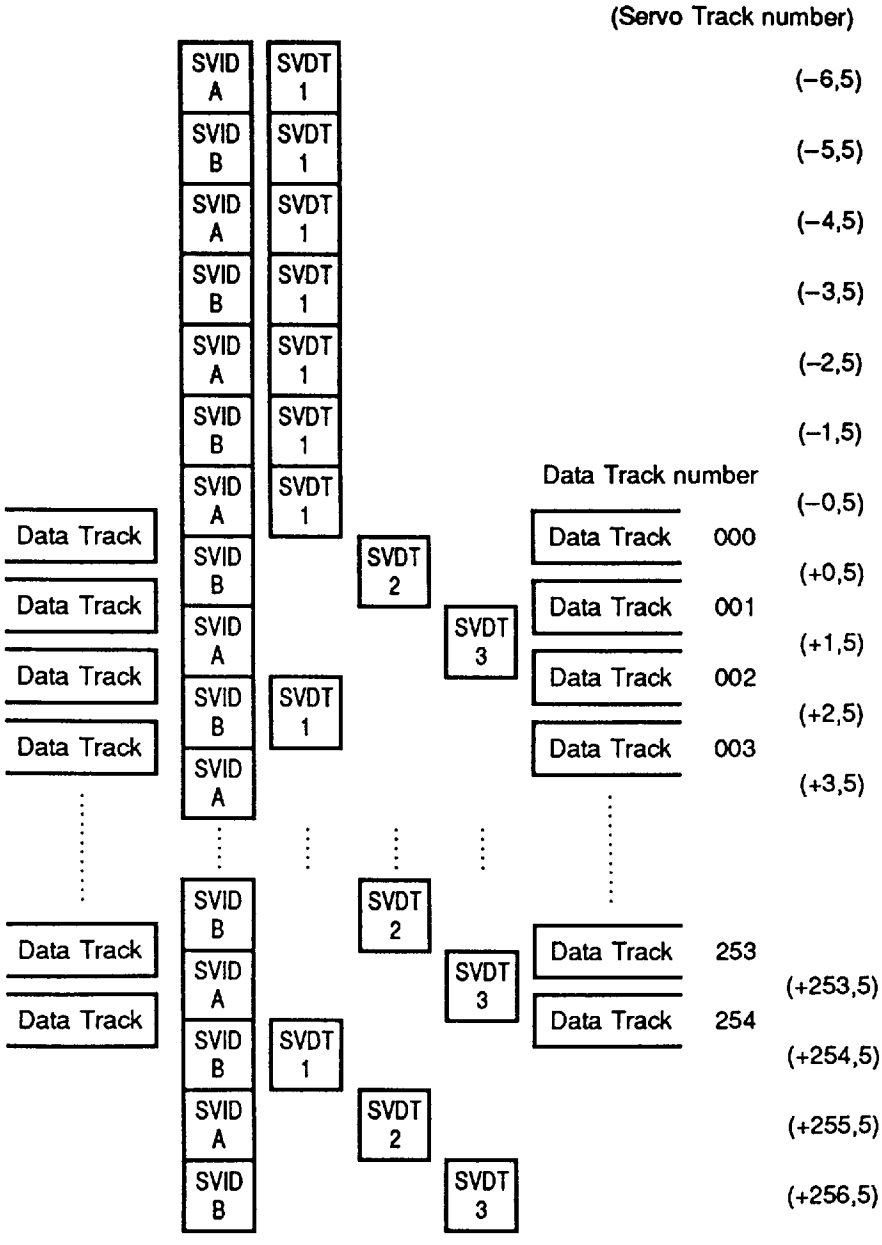

Figure 10 - Servo track layout

Copyright International Organization for Standardization
Provided by IHS under license with ISO
No reproduction or networking permitted without license from IHS
Not for Resale

14.1 Deviation between the data track and the servo track

On each sector, the radius of the centreline of the boundaries between two radially adjacent Servo Data and the radius of the centreline of the following data track shall not deviate by more than 0,003 mm.

Move the head radially over the disk in increments not greater than 0,005 mm across the track. Determine the read back signal amplitude for each increments move and obtain the radius of the tracks respectively, and the deviation shall be calculated through the following formula.

$$CD = \frac{Rs_1 + Rs_2}{2} - Rd$$

where

CD is the deviation between the data track and the servo tracks, in millimetres;

Rd is the radius of the data track having the maximum output on the sector, in millimetres;

Rs_1 is the radius of the track having two radially adjacent Servo Data of equal outputs on the same sector, in millimetres;

Rs_2 is the radius of the track having two radially adjacent Servo Data of equal outputs on the following sector, in millimetres.

14.2 Servo area timing

The timing of this area shall be as shown in figure 11.

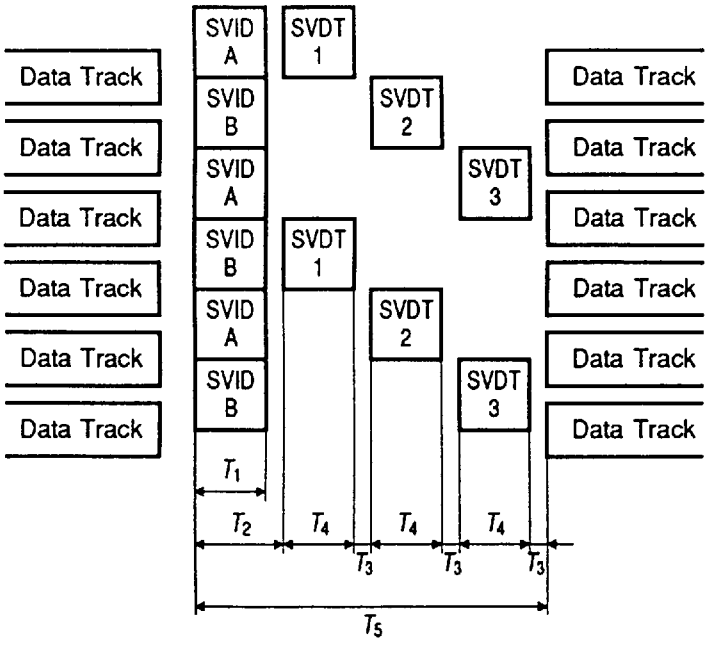

	T_1	T_2	T_3	T_4	T_5
Recording time (µ seconds)	80,0	89,6	19,2	118,4	502,4
Number of bytes	12,5	14,0	3,0	18,5	78,5

Figure 11 - Servo area timing

Copyright International Organization for Standardization
Provided by IHS under license with ISO
No reproduction or networking permitted without license from IHS
Not for Resale

14.2.1 Servo Identifier

The Servo Identifier of sector 01 shall begin at a point equivalent to 48,5 bytes from the instant at which the Index pulse occurs. The Servo Identifier of sector 02 or a following sector shall begin at a distance equal to 666,5 bytes from the beginning of the Servo Identifier of the preceding sector.

An A-type Servo Identifier (SVID A) shall be recorded for 12,5 bytes area. A B-type Servo Identifier (SVID B) for 12,5 bytes area.

SVID A shall be recorded on the outermost track (servo track -6,5), and SVID B shall be recorded on the servo track -5,5 next to the outermost servo track. SVID A and SVID B shall be recorded in the same alternate manner from servo track -4,5 to servo track +256,5.

A length of tape equal to 1,5 bytes length shall be d.c. erased after the end of SVID A or SVID B. The data track shall begin at a distance equal to 78,5 bytes from the beginning of SVID A or SVID B.

The Index pulse shall be generated on all tracks at a location 0,35 mm from the centre Reference Line C shown in figure 12, and its leading edge shall indicate the beginning of each track.

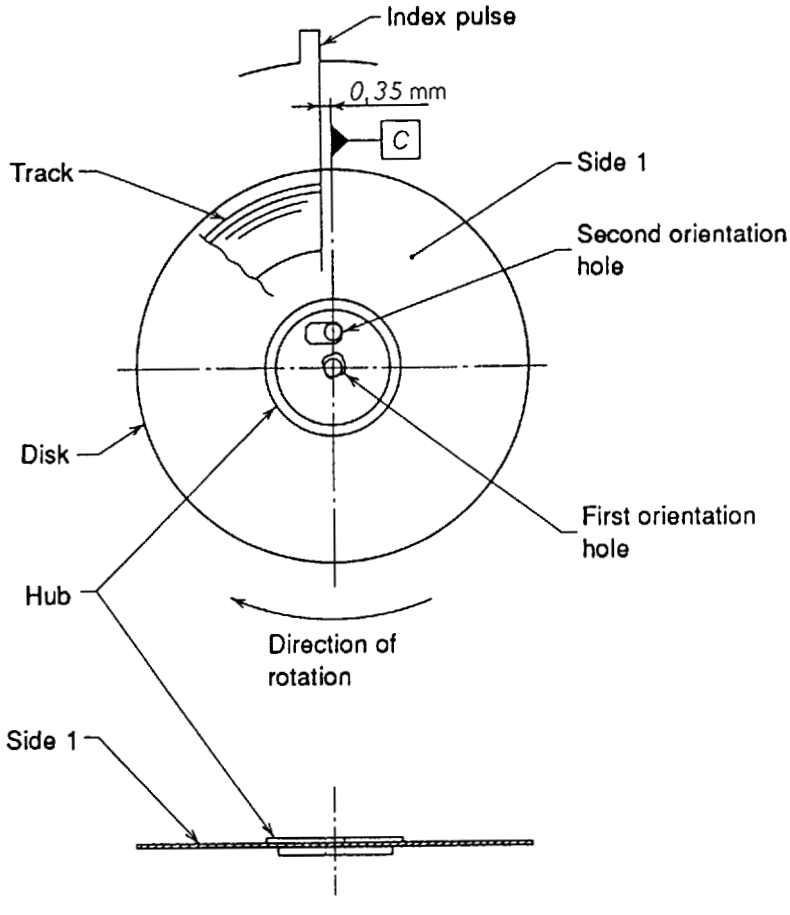

Figure 12 - Location where the Index pulse is generated

14.2.2 Servo Data

The three types of Servo Data (SVDT 1, SVDT 2 and SVDT 3) shall be recorded as shown in Figure 10.

The Servo Data of the outermost seven servo tracks (servo tracks -6,5 to -0,5) shall be SVDT 1. The Servo Data of other servo tracks shall be SVDT i specified by using the formula.

$$i = \text{rem}\,[(N + 0{,}5), 3] + 1$$

where

N is the servo track number , N = -0,5 to +256,5;

rem (x,y) is the remainder when integer x is divided by integer y.

Copyright International Organization for Standardization
Provided by IHS under license with ISO
No reproduction or networking permitted without license from IHS Not for Resale

The recording position of SVDT 1 to SVDT 3 and the servo signal shall be as follows:

a) For SVDT 1:

The area of 1,5 bytes length shall be d.c. erased from the end of the Servo Identifier. Then the 18,5 bytes long servo signal shall be recorded, and the following area of 46 bytes length shall be d.c.erased.

b) For SVDT 2:

The area of 23 bytes length shall be d.c.erased from the end of the Servo Identifier. Then the 18,5 bytes long servo signal shall be recorded, and the following area of 24,5 bytes length shall be d.c. erased.

c) For SVDT 3:

The area of 44,5 bytes length shall be d.c. erased from the end of the Servo Identifier. Then the 18,5 bytes long servo signal shall be recorded, and the following area of 3 bytes length shall be d.c. erased.

d) The SVDT servo signals shall be recorded at the flux transition frequencies of 1 250 000 ftps for the first flux transition, 625 000 ftps for following 73 flux transitions, and 1 250 000 ftps for the last flux transition respectively.

Copyright International Organization for Standardization
Provided by IHS under license with ISO
No reproduction or networking permitted without license from IHS
Not for Resale

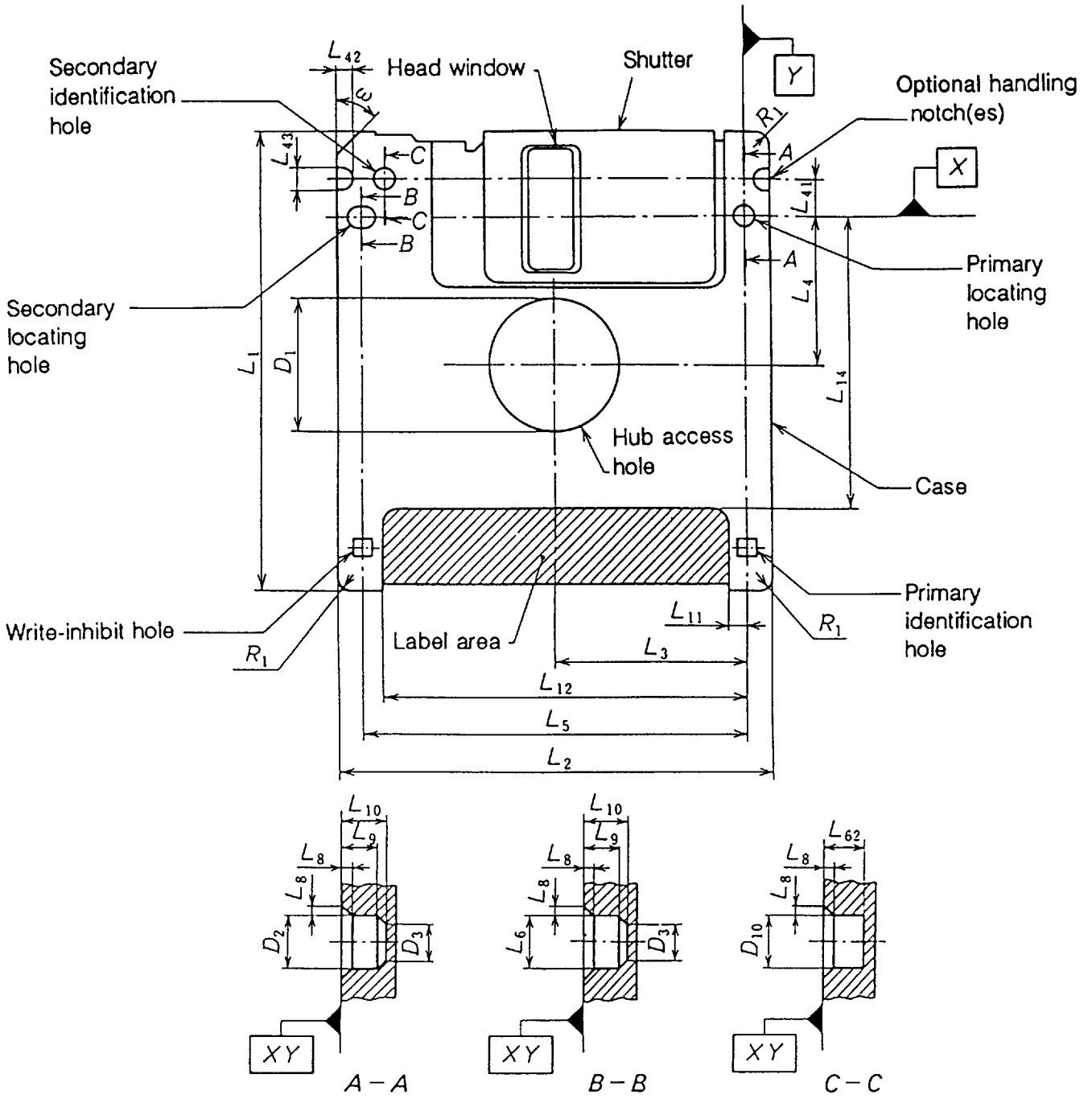

Figure 13 - Side 0

Copyright International Organization for Standardization
Provided by IHS under license with ISO
No reproduction or networking permitted without license from IHS
Not for Resale

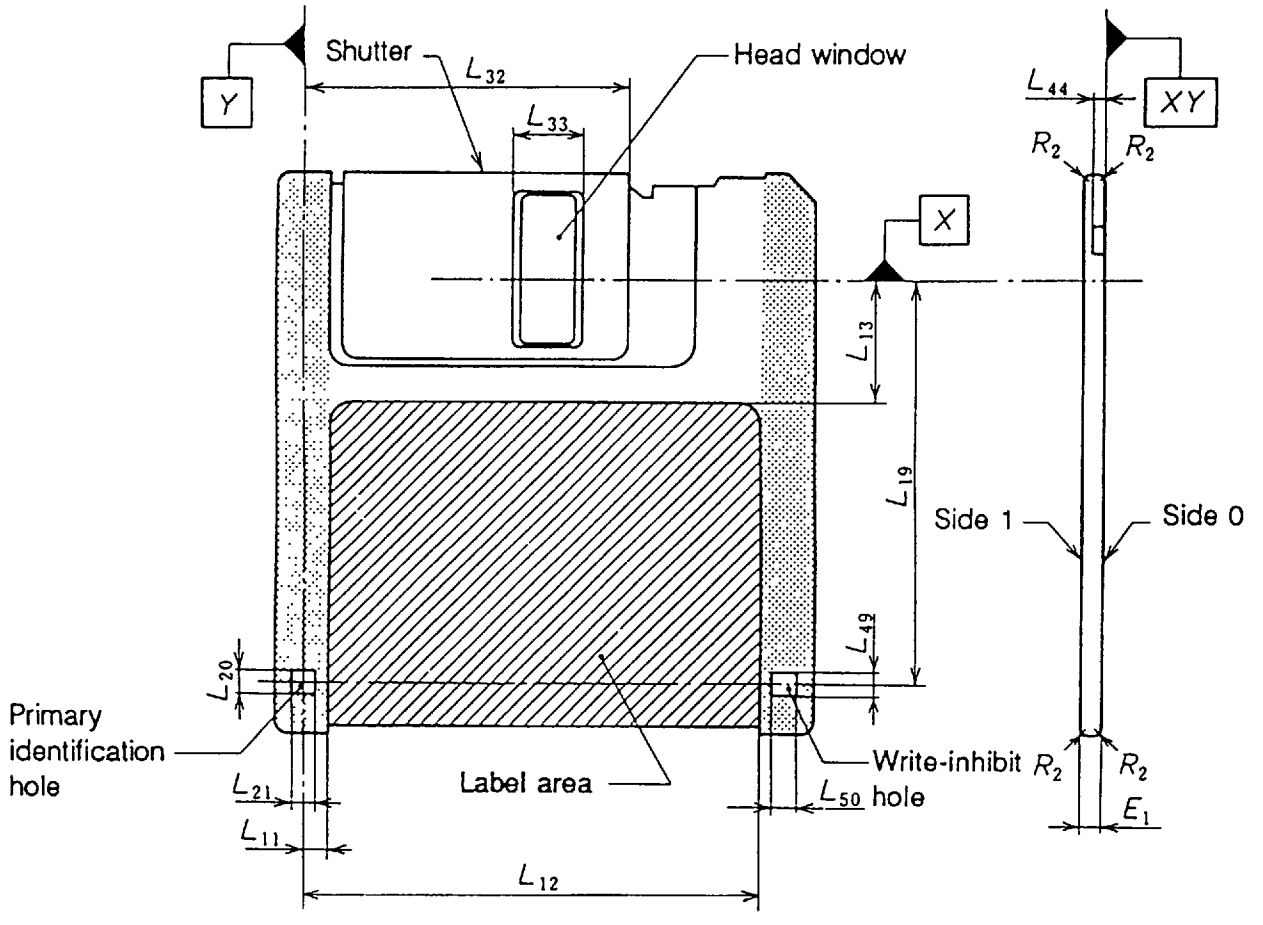

Figure 14 - Side 1

Copyright International Organization for Standardization
Provided by IHS under license with ISO
No reproduction or networking permitted without license from IHS
Not for Resale

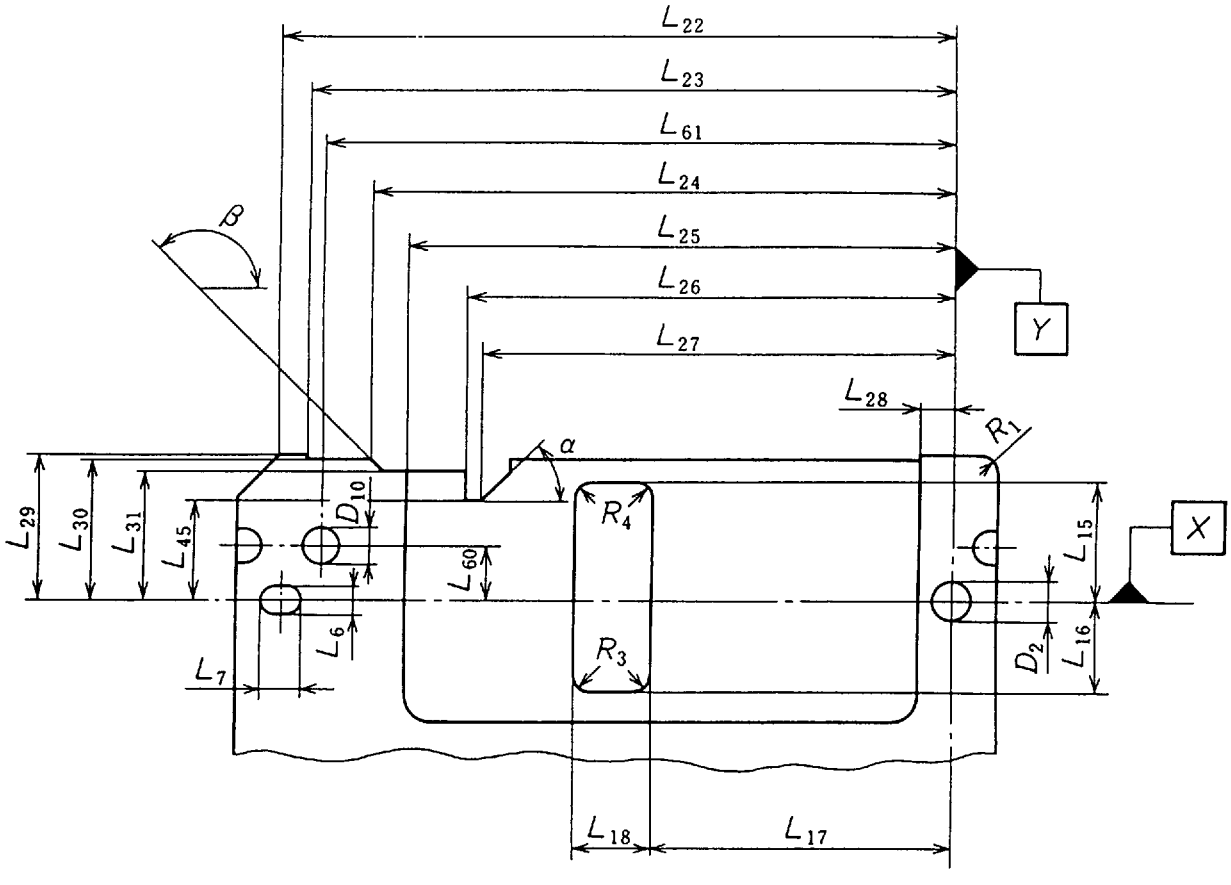

Figure 15 - Side 0, top part

Copyright International Organization for Standardization
Provided by IHS under license with ISO
No reproduction or networking permitted without license from IHS

Not for Resale

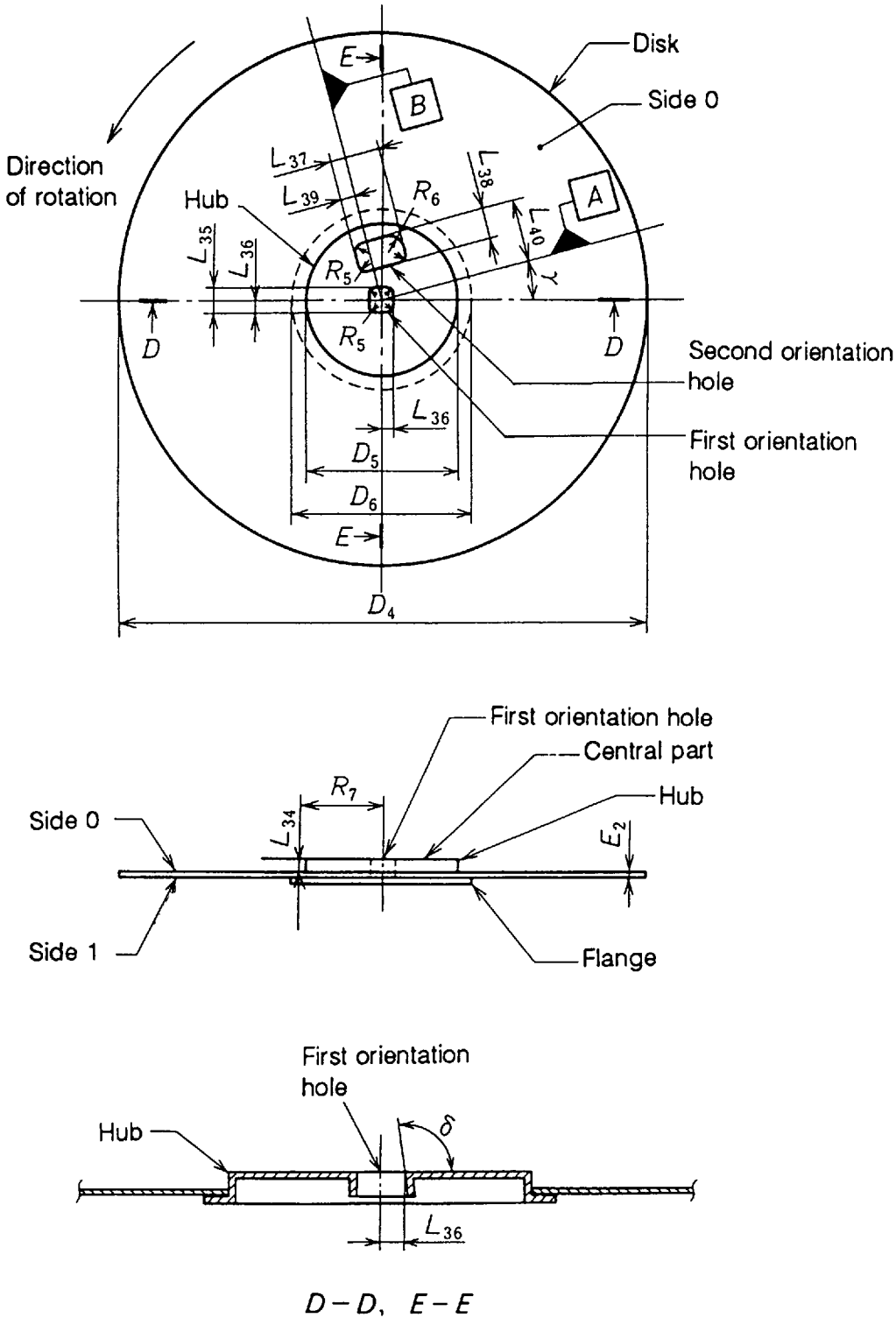

Figure 16 - Disk with hub

Copyright International Organization for Standardization
Provided by IHS under license with ISO
No reproduction or networking permitted without license from IHS
Not for Resale

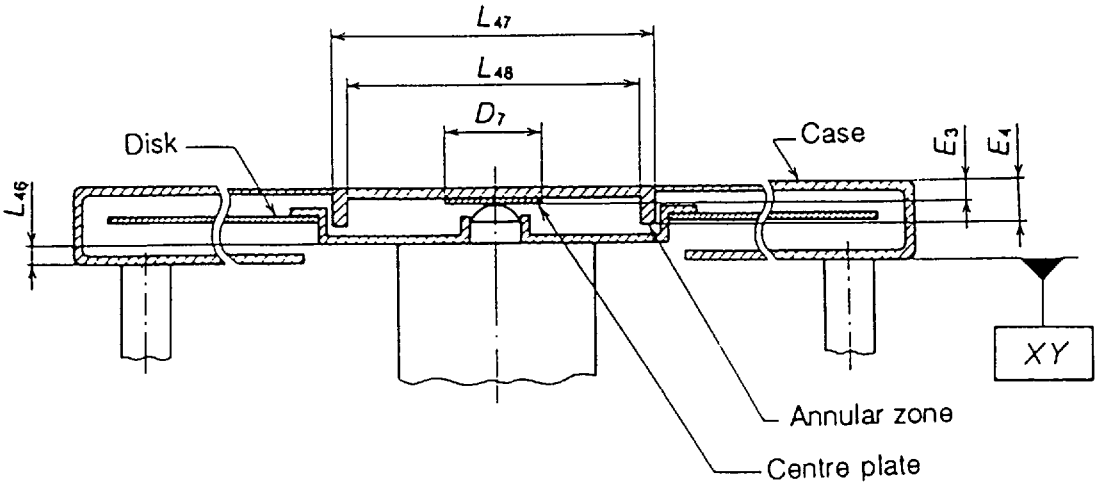

Figure 17 - Cartridge/Drive interface

Copyright International Organization for Standardization
Provided by IHS under license with ISO
No reproduction or networking permitted without license from IHS
Not for Resale

Annex A

(normative)

Test for compliance

A.1 The purpose of this test is to determine whether the cartridge will maintain the proper plane of operation within the drive. This is achieved by supporting the cartridge at defined reference zone and applying forces opposite to the supports.

A.2 The location of the four zones a, b, c, d (figure A.1) is defined by

L_S = 80,0 mm ± 0,2 mm

L_X = 62,0 mm ± 0,2 mm

Two of these zones, a and b, coincide with the primary and the secondary location holes, respectively.

A.3 The test device (figure A.2) consists of a base plate on which four posts are fixed so as to correspond to the four zones a, b, c, d. Posts P_1, P_2 correspond to the zones a and b, respectively. Posts P_3, P_4 correspond to zones c and d, respectively. A fifth post (P_5) is mounted in the middle of the plate and corresponds to the drive spindle. The dimensions of these posts are as follows (figure A.3):

Posts P_1, P_2

d_1 = 6,00 mm ± 0,01 mm

d_2 = 3,00 mm ± 0,01 mm

h_1 = 1,00 mm max.

h_2 = 2,00 mm max.

Post P_5

d_3 = 12,70 mm ± 0,01 mm

d_4 = 3,98 mm ± 0,01 mm

$h_3 = 2{,}20\ \text{mm}\ ^{+0,03}_{0,00}$ mm

r = 2,50 mm ± 0,3 mm

Posts P_3, P_4

d_5 = 6,00 mm ± 0,01 mm

After assembly, the upper annular surfaces of posts P_1 to P_4 shall lie between two horizontal planes spaced 0,02 mm apart.

A.4 The cartridge is laid on these four posts and a vertical, downward force of 0,6 N is exerted simultaneously on each of the four zones.

Copyright International Organization for Standardization
Provided by IHS under license with ISO
No reproduction or networking permitted without license from IHS
Not for Resale

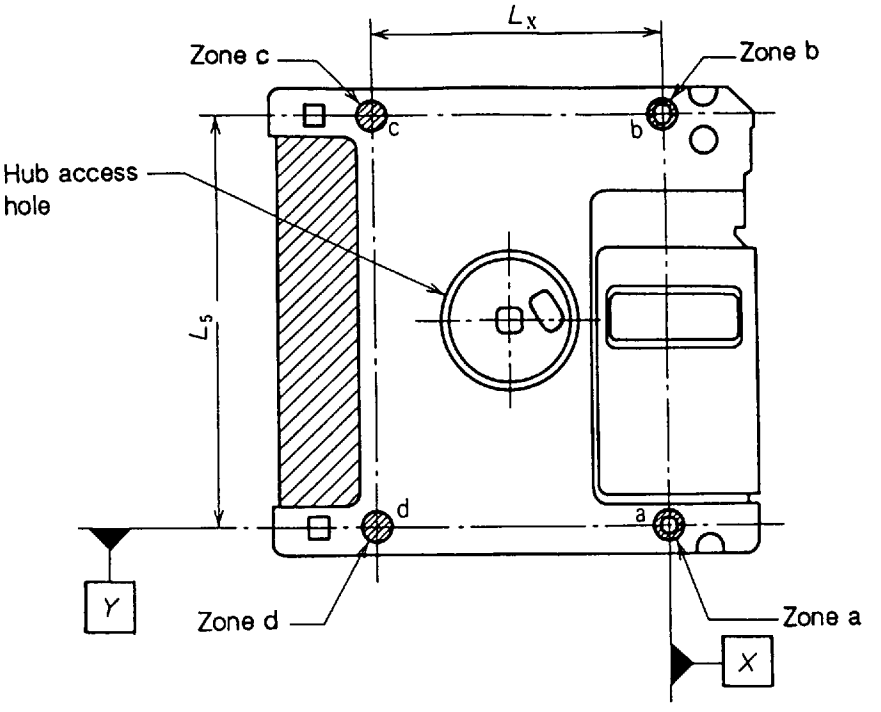

Figure A.1 - Location of the reference zones

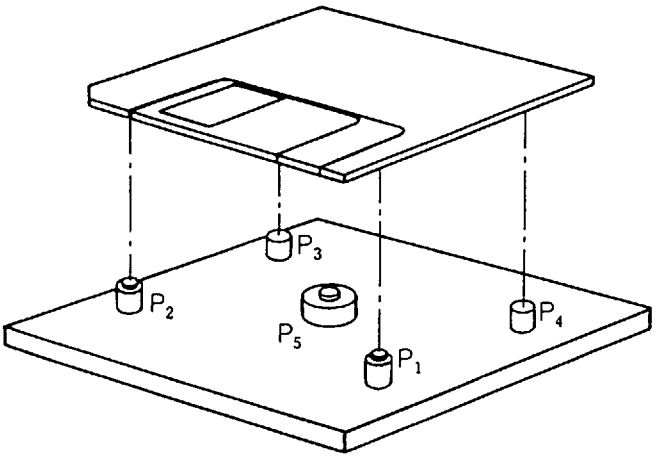

Figure A.2 - Test device

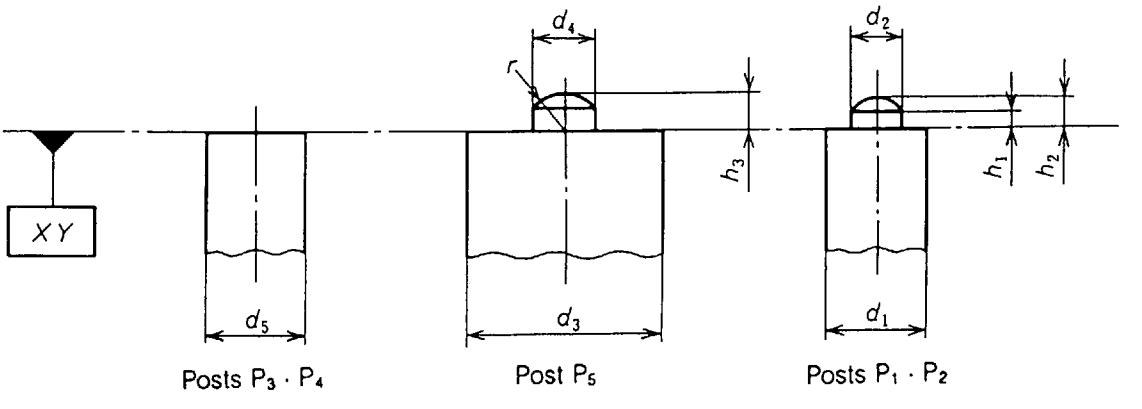

Figure A.3 - Dimensions of the posts

Copyright International Organization for Standardization
Provided by IHS under license with ISO
No reproduction or networking permitted without license from IHS
Not for Resale

4851903 0578678 614

Annex B
(normative)
Measurement of light transmittance

B.1 Introduction

The following description outlines the general principle of the measuring equipment and the measuring method to be applied when measuring the radiation (light) transmittance of the write-inhibit hole and the opacity of its cover.

For the purpose of this International Standard "light transmittance" is defined by convention as the relationship between the reading obtained from the test device with the sample inserted and the reading obtained when no sample is present. The transmittance value is expressed as the percentage ratio of the two readings. The essential elements of the measuring equipment are:

- the radiation source
- the photo diode
- the optical path
- the measuring circuitry.

B.2 Description of the measuring equipment

B.2.1 Radiation source

An infrared light-emitting diode (LED) with the following parameters shall be used:

Wavelength at peak emission: 940 nm $\pm$ 10 nm

Half-power band width: $\pm$ 50 nm

B.2.2 Radiation receiver

A flat silicon photo diode shall be used as the radiation receiver. It shall be operated in the short circuit mode. The active area of the diode shall be equal to, or at the most 20 % larger than, the open area of the aperture. This condition guarantees a linear dependency of the short circuit diode current on the light intensity.

B.2.3 Optical path (figure B.1)

The optical axis of the set up shall be perpendicular to the case (Side 1).

The distance from the emitting surface of the LED to the case shall be

$$l_1 = \frac{3{,}5}{2 \tan \alpha}$$

where 3,5 is the minimum value, in millimetres, of dimension L_{49} (see 8.1.7.2).

α is the angle where the relative intensity of the LED equals at least 95 % of the maximum intensity on the optical axis.

The aperture shall have a thickness of 1,2 mm to 1,4 mm and a diameter given by

$D = (2\, l_2 \tan \alpha)$

$l_2 = (l_1 + 1{,}5 \text{ mm})$

Its surfaces shall be matt black. The whole device should be enclosed within a light-tight casing.

Copyright International Organization for Standardization
Provided by IHS under license with ISO
No reproduction or networking permitted without license from IHS Not for Resale

B.2.4 Measuring circuitry

Figure B.2 shows the recommended circuitry with the following components:

E:	regulated power supply with variable output voltage
R:	current-limiting resistor
LED:	light-emitting diode
D_i:	Si photo diode
A:	operational amplifier
R_{f0}, R_{f1}:	feedback resistors
S:	gain switch
V:	voltmeter

The forward current of the LED and consequently its radiation power can be varied by means of the power supply E. D_i is working in the short circuit mode. The output voltage of the operational amplifier is given by

$$V_0 = I_k \cdot R_f$$

and is therefore a linear function of the light intensity. I_k is the short circuit current of D_i.

R_{f0} and R_{f1} shall be low-temperature drift resistors with an accuracy of 1 %. The following ratio applies:

$$\frac{R_{f0}}{R_{f1}} = \frac{1}{50}$$

B.3 Measuring method

The measurements shall be taken with the case in a fixed position.

- S is set to position 0. With the write-inhibit hole open in front of the photodiode. The voltmeter is set to full-scale reading (100 % transmittance) by varying the output voltage of E.
- The write-inhibit hole is then covered. S is set to position 1. Full deflection of the voltmeter now represents 2 % transmittance.

Copyright International Organization for Standardization
Provided by IHS under license with ISO
No reproduction or networking permitted without license from IHS Not for Resale

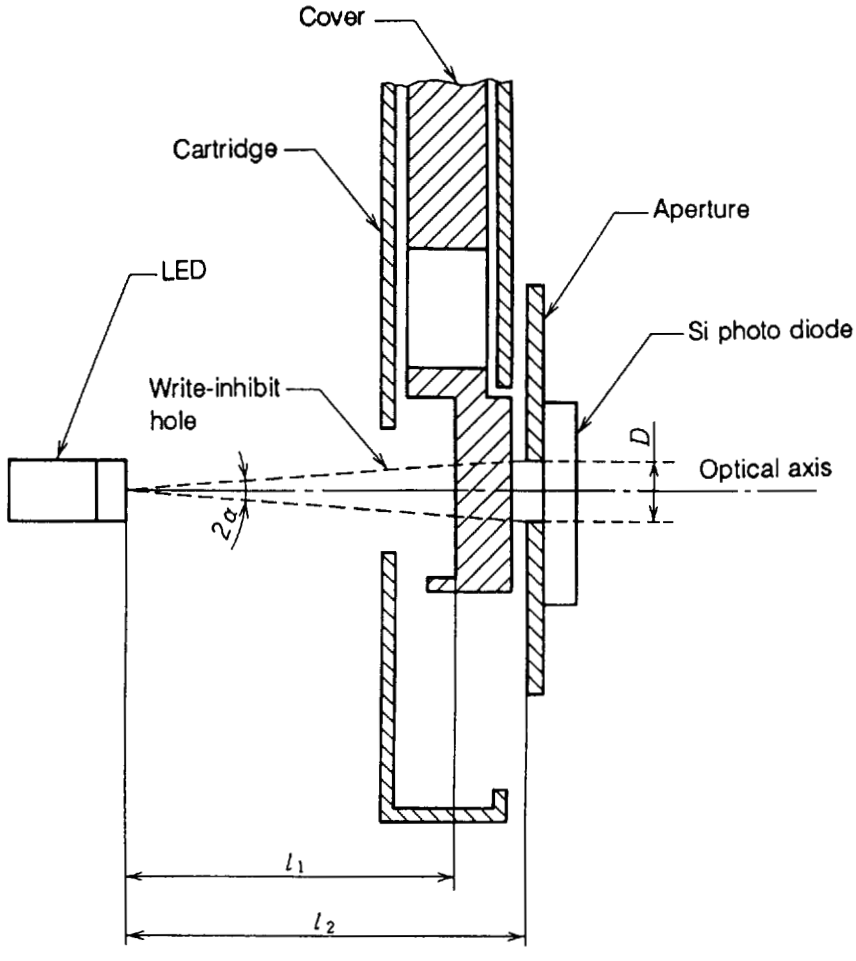

Figure B.1 - Measuring device

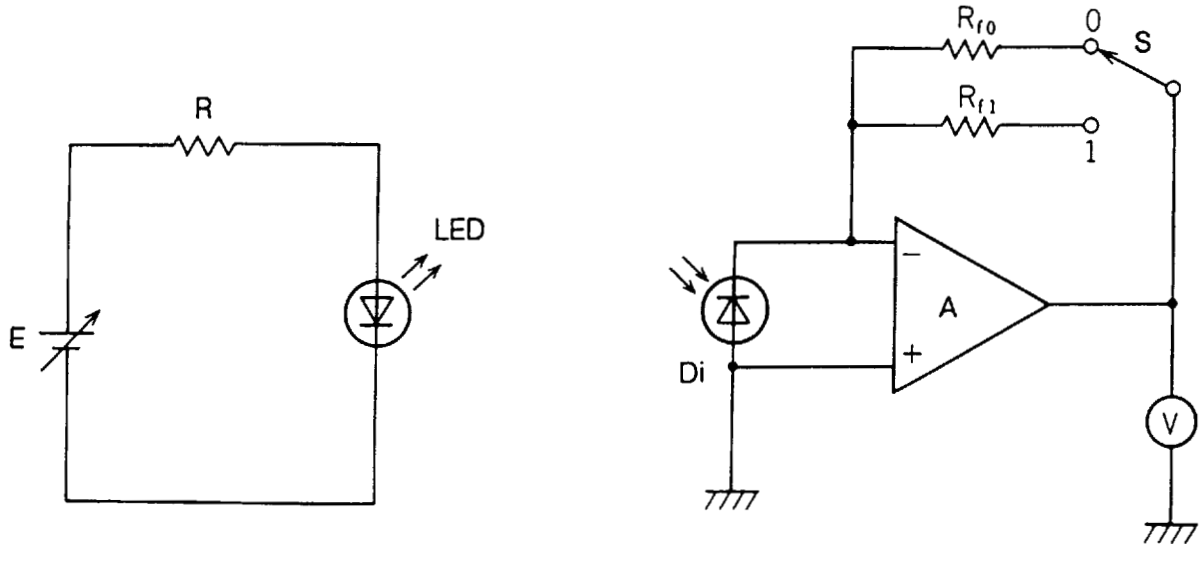

Figure B.2 - Electronic circuitry

Copyright International Organization for Standardization
Provided by IHS under license with ISO
No reproduction or networking permitted without license from IHS
Not for Resale

Annex C

(normative)

Method for measuring the effective track width

C.1 Width of data tracks

Erase a 7-track wide band. Record a 625 000 ftps frequency pattern in a track centred in the middle of the erased band.

For reading use a head the gap width of which is wider than the expected track width. Move this head radially over the disk in increments not greater than 0,005 mm across the track. Determine the read back signal amplitude for each increments move and plot its amplitude versus displacement. See figure C.1 below for reading the half track widths *A* and *B*. The total effective track width is the sum of *A* and *B*.

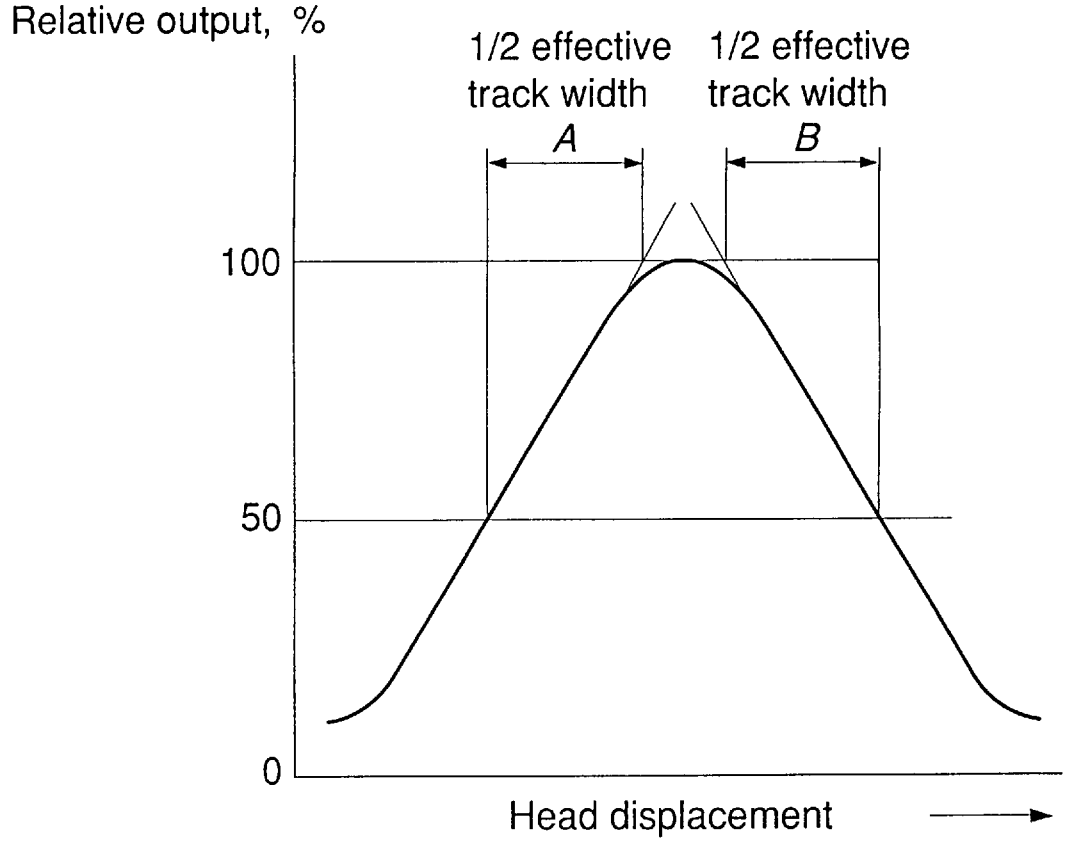

Figure C.1 - Effective track width of data tracks

Copyright International Organization for Standardization
Provided by IHS under license with ISO
No reproduction or networking permitted without license from IHS
Not for Resale

C.2 Width of servo tracks and space area, pitch of servo tracks

For reading use a head the gap width of which is smaller than the expected servo track width.

C.2.1 Width of servo tracks

Move the head radially over the disk in increments not greater than 0,005 mm across the track. Determine the read back signal amplitude for each increments move and plot its amplitude versus displacement. See figure C.2 below for reading a head displacements A_1 and B_1 defined as the half signal amplitude of the maximum amplitude V_1. The effective track width is the difference of A_1 and B_1.

C.2.2 Width of space area

In the same way, read a head displacements A_2 and B_2 of the next servo track. The width of space area is the difference of B_1 and A_2.

C.2.3 Pitch of servo tracks

In the same way, the pitch of servo tracks is the difference of the central position of A_1 and B_1, and that of A_2 and B_2.

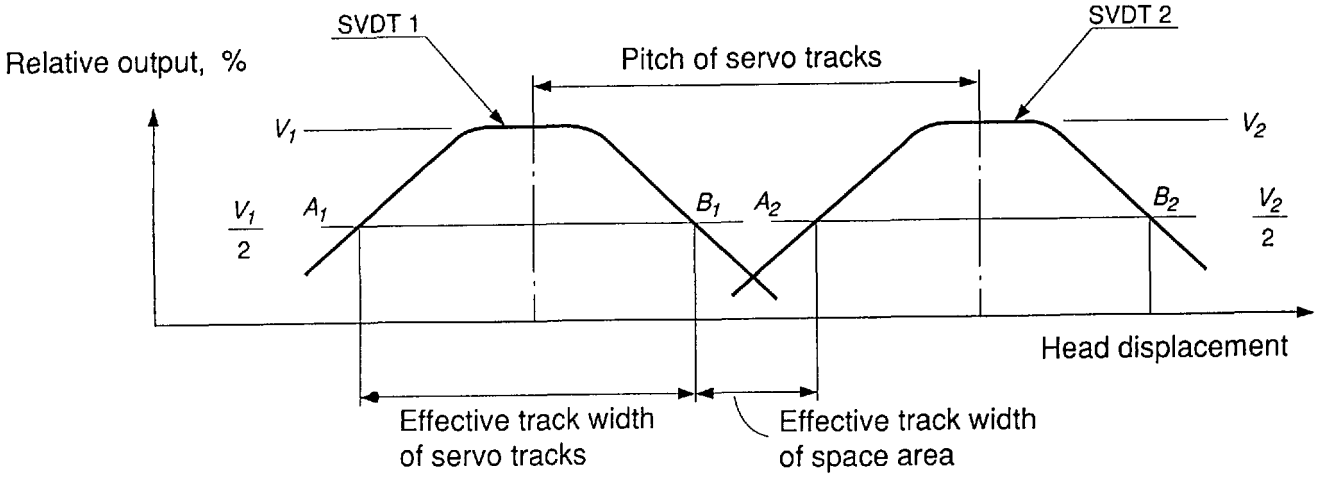

Figure C.2 - Effective track width of servo tracks

Copyright International Organization for Standardization
Provided by IHS under license with ISO
No reproduction or networking permitted without license from IHS
Not for Resale

Annex D

(normative)

Procedure and equipment for measuring flux transition spacing

D.1 General

This annex specifies equipment and the procedure for measuring flux transition spacing of data recorded for data interchange on a 90 mm Flexible Disk Cartridge using MFM recording at 33 157 flux transitions per radian on 255 data tracks on each side.

D.2 Test equipment

D.2.1 Disk drive

The disk drive shall have a rotational speed of 360,0 rpm ± 3,6 rpm averaged over one revolution. The average angular speed taken over 32 μs shall not deviate by more than 0,2 % from the speed averaged over one revolution.

D.2.2 Head

D.2.2.1 Resolution

The head shall have an absolute resolution of 60 % to 65 % at track 254 on each side, using the Secondary Standard Flexible Disk Cartridge, Reference Material JRM 6227, applying the calibration factor of the Reference Material appropriate to the side, and recording with the appropriate Test Recording Current.

The resonant frequency of the head shall be greater than 1 250 000 Hz. The resolution shall not be adjusted by varying the load impedance of the head. The resolution shall be measured at the output of the amplifier defined in D.2.3.1.

D.2.2.2 Offset angle

The offset angle of the head shall be

$$\theta = \arcsin \frac{d}{R_n} \pm 0^\circ\ 5'$$

where

R_n is the nominal radius through that transition in millimetres (see 10.2.3.1), and d = 0,35 mm.

D.2.2.3 Contact

Care shall be taken that the heads are in good contact with the disk during tests

D.2.3 Read channel

D.2.3.1 Read amplifier

The read amplifier shall have a flat response from 10 000 Hz to 937 000 Hz within a 2 dB wide band, and amplitude saturation shall not occur.

D.2.3.2 Peak sensing amplifier

Peak sensing shall be carried out by a differentiating and limiting amplifier or equivalent.

Copyright International Organization for Standardization
Provided by IHS under license with ISO
No reproduction or networking permitted without license from IHS
Not for Resale

D.2.4 Time interval measuring resolution

The time interval counter shall be able to measure 2,5 μs with a resolution of 5 ns or better. A triggering oscilloscope may be used for this purpose.

D.3 Procedure for measurement

D.3.1 Flux transition spacing measurement

The flux transition spacings shall be measured by measuring the time intervals between successive peaks in the read signal for 10^5 intervals of random sampling on a track, and plotting logarithmically the distribution of the time intervals as shown in figure D.1.

The measurements shall be made at the output of the read amplifier specified in D.2.3.1.

D.3.2 Flux transition spacing for all tracks

Measurement of time intervals t_1 to t_6 shall be as shown below.

t_2/t_0 (× 100 %) and t_1/t_0 (× 100 %) correspond to 11.5.1

t_4/t_0 (× 100 %) and t_3/t_0 (× 100 %) correspond to 11.5.2

t_6/t_0 (× 100 %) and t_5/t_0 (× 100 %) correspond to 11.5.3.

t_0 is the short-term average bit cell length = 0,8 μs nominal.

Intervals which are out of specification due to Data Block splicings or index splicing may be neglected.

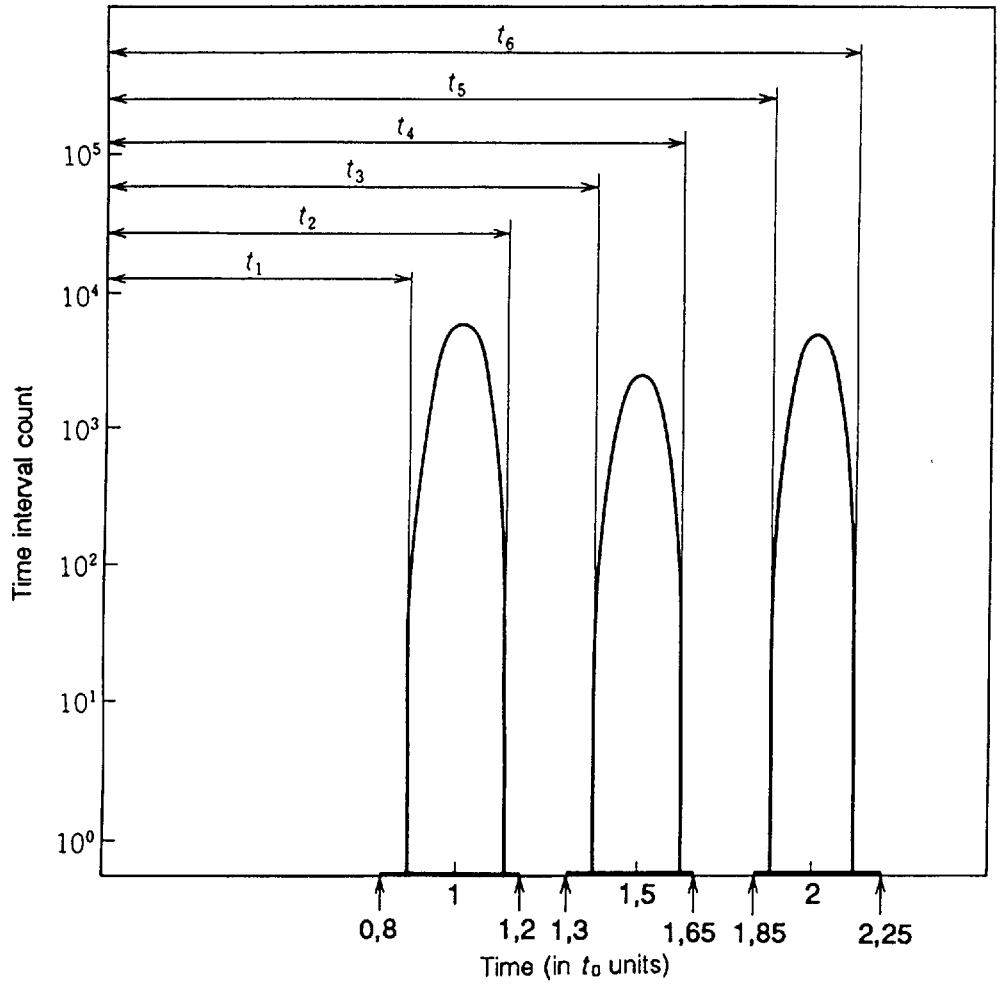

Figure D.1 - Flux transition spacing distribution

Copyright International Organization for Standardization
Provided by IHS under license with ISO
No reproduction or networking permitted without license from IHS
Not for Resale

4851903 0578685 854

Annex E

(informative)

Data separators for decoding MFM recording

The MFM recording method gives nominal flux transition spacings of

t for the patterns 111 to 000

$3t / 2$ for the patterns 100 or 001

$2t$ for the pattern 101

The data separator should be capable of resolving a difference of 0,8 μs. To achieve this with a low error rate, the data separator cannot operate on a fixed period but should follow changes in the bit cell length.

It is recognized that only a data separator based on a phase-locked oscillator can provide the necessary reliability with present technology.

Copyright International Organization for Standardization
Provided by IHS under license with ISO
No reproduction or networking permitted without license from IHS
Not for Resale

4851903 0578686 790

Annex F
(informative)
EDC implementation

Figure F.1 shows the feedback connections of a shift register which may be used to generate the EDC bytes.
Prior to the operation, all positions of the shift register are set to ONE. Input data are added (exclusive OR) to the contents of position C_{15} of the resister to form a feedback. This feedback is in its turn added (exclusive OR) to the contents of position C_4 and position C_{11}.
On shifting, the outputs of the exclusive OR gates are entered respectively into positions C_0, C_5 and C_{12}. After the last data bit has been added, the resister is shifted once more as specified above. The register then contains the EDC bytes.
If further shifting is to take place during the writing of the EDC bytes, the control signal inhibits exclusive OR operations.
To check for errors when reading, the data bits are added into the shift register in exactly the same manner as they were during writing. After the data the EDC bytes are also entered into the shift register as if they were data. After the final shift, the register contents will be all ZERO if the record does not contain errors.

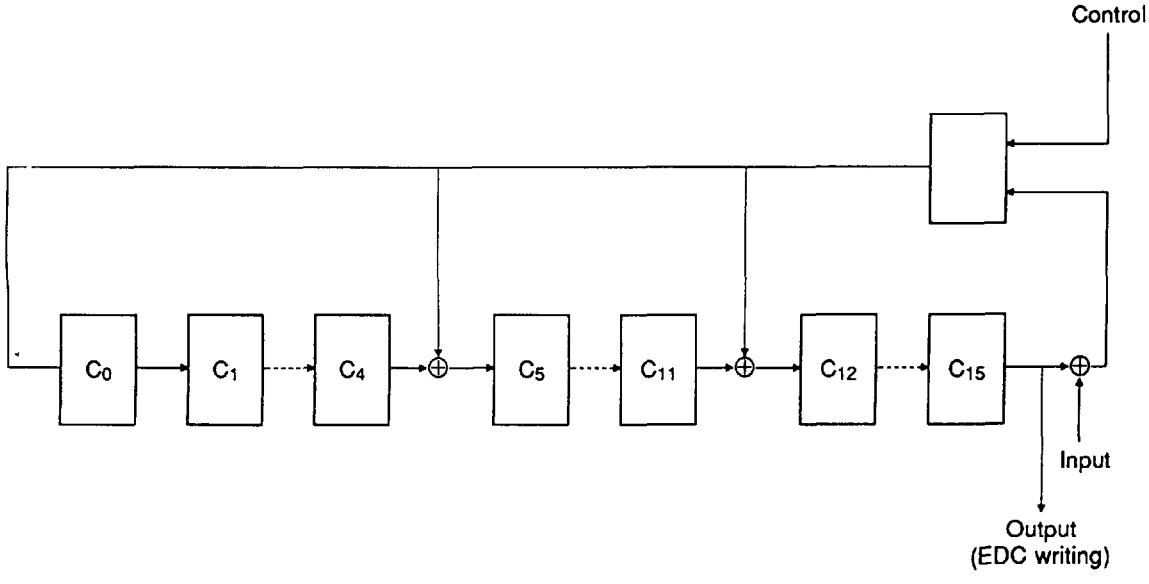

Figure F.1 - Shift register

Copyright International Organization for Standardization
Provided by IHS under license with ISO
No reproduction or networking permitted without license from IHS
Not for Resale

Annex G

(normative)

Cartridge distortion test gauge

G.1 The gauge to be used is shown in figure G.1.

G.2 The gauge shall be made of a suitable material, e.g. of carbon steel and be chrome-plated. The inner surfaces shall be polished to a surface finish of 5 μm peak-to-peak.

G.3 Dimensions shall be as follows:

A = 96,0 mm min.

B = 91,0 mm $\pm$ 0,1 mm

C = 8,50 mm $\pm$ 0,01 mm

D = 3,80 mm $\pm$ 0,01 mm

E = 4,20 mm $\pm$ 0,01 mm

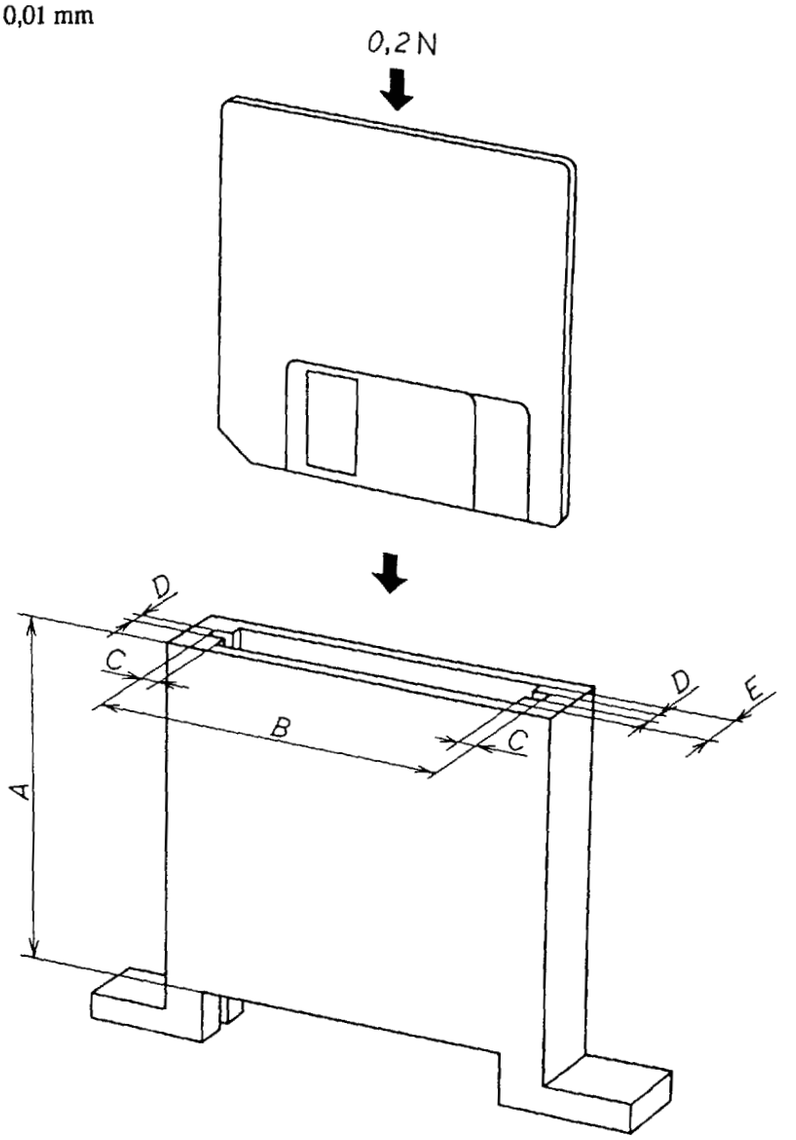

Figure G.1 - Test gauge

Copyright International Organization for Standardization
Provided by IHS under license with ISO
No reproduction or networking permitted without license from IHS
Not for Resale

4851903 0578688 563

Annex H

(normative)

Method of measuring peak shift

H.1 Introduction

The resolution of a flexible disk system at the inner tracks, where the recording density is highest, must be sufficiently high to minimize the peak shift. However, it must not be too high at outer tracks, where the recording density is lowest, otherwise spurious read pulses may be generated.

This test controls the characteristics of the disk by measuring the peak shift at inner tracks and setting limits for the upper and lower values.

H.2 Description of the measuring equipment

H.2.1 Peak shift test drive

The test drive shall be any drive suitable for use at 33 157 ftprad.

H.2.2 Peak shift measurement circuit

The measurement circuit shall be as shown in figure H.1.

The operation of the circuit is illustrated in the timing diagram figure H.2 as follows:

a) Index pulse

The Index pulse represents the beginning and end of the track.

b) Index pulse timer

Index pulse timer is a 1 ms timer triggered by the Index pulse. Its output masks the discontinuities that occur in the recording when the write current is switched off.

c) Read signal

Read signal is the read-back signal of the test pattern. The positive-going edge of the first bit of a pair triggers the flip-flop (LS 74). The negative-going edge of the first bit of a pair triggers the timer (LS 221).

d) Bit period window

This is the output waveform of the timer (LS 221). It allows the positive-going edge of the second bit of a pair to reset the other flip-flop (LS 74).

e) Bit period

The duration of the bit period is the time interval T' between the two bits of a pair of the read signal.

f) Sampling period

This period commences when the second flip-flop (LS 74) is set by the trailing edge of the bit period window (d) after the Index pulse timer has reset.

It is terminated by the trailing edge of the first output pulse of the timer (LS 221) to occur during the period of the next Index pulse timer.

g) Output

Bit period (e) is passed to the time interval counter during the sampling period (f).

H.2.3 Period of the timer (LS 221)

The period of this timer shall be 1.2 μs.

H.2.4 Time interval counter

The counter shall have a resolution of 5 ns or better.

Copyright International Organization for Standardization
Provided by IHS under license with ISO
No reproduction or networking permitted without license from IHS Not for Resale

H.3 Test method

H.3.1 AC bulk-erase the disk cartridge.

H.3.2 Using the Test Recording Current, write the test pattern DB6 (110110110110...) continuously on track 254, on each side, commencing with the Index pulse and switching off the write current when the Index pulse is detected at the end of one revolution.

H.3.3 Read back on the same test drive and measure intervals T' on the time interval counter.

NOTE - To minimize errors due to changes in the rotational speed of the drive, it is essential that reading shall occur immediately after writing.

H.3.4 Sampling method

H.3.4.1 The data recording area extends from immediately after the leading edge of the Index pulse to immediately after the leading edge of the next Index pulse.

NOTE - Due to uncertainties of recording near the leading edge of the Index pulse, care must be taken not to sample the read signal in the region of uncertainty.

H.3.4.2 The sampling area extends from the resetting of the Index pulse timer to the leading edge of the next Index pulse (resulting from H.2.2 b).

H.3.4.3 The preferred sampling method is to measure every T' interval in the sampling area, if permitted by the sampling rate of the time interval counter. If the sampling rate of the counter prohibits the measurement of every T', then a lesser number of T' measurements shall be permitted, providing that the sampling is random.

H.3.4.4 The minimum number of random samples shall be 1 000.

H.3.5 Asymmetry of the write waveform

To eliminate errors due to asymmetry of the write current waveform, repeat operations H.3.1 to H.3.4 using the test pattern B6D(101101101101...).

H.3.6 The operations specified in H.3.1 to H.3.5 shall be repeated for a Secondary Standard Reference FDC.

H.4 Definitions

$$\text{Peak shift} = \frac{\overline{T'} - T}{2}$$

where

$\overline{T'}$ is the mean period between pairs of bits in the read waveform, in micro seconds;

T equals 0,8 μs, i.e. the period of the f_2 pattern.

The peak shift value of the disk under test expressed as a percentage of that for the Master Standard Reference FDC shall be

$$\frac{Pt}{Ps} \times Ko\ \%$$

Copyright International Organization for Standardization
Provided by IHS under license with ISO
No reproduction or networking permitted without license from IHS Not for Resale

where

Pt is the peak shift value obtained for the disk under test, in micro seconds;

Ps is the peak shift value obtained for the Secondary Standard Reference FDC, in micro seconds;

Ko is the calibration factor in percent for the Secondary Standard Reference FDC relative to the Master Standard Reference FDC.

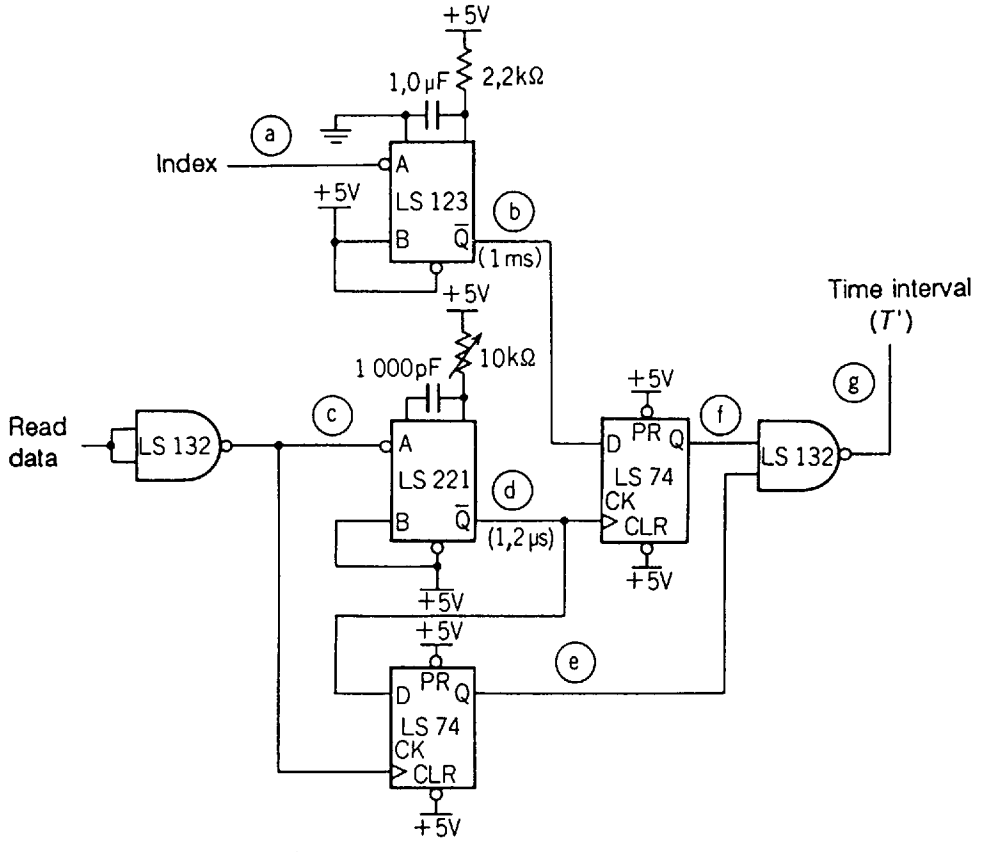

Figure H.1 - Measurement circuit

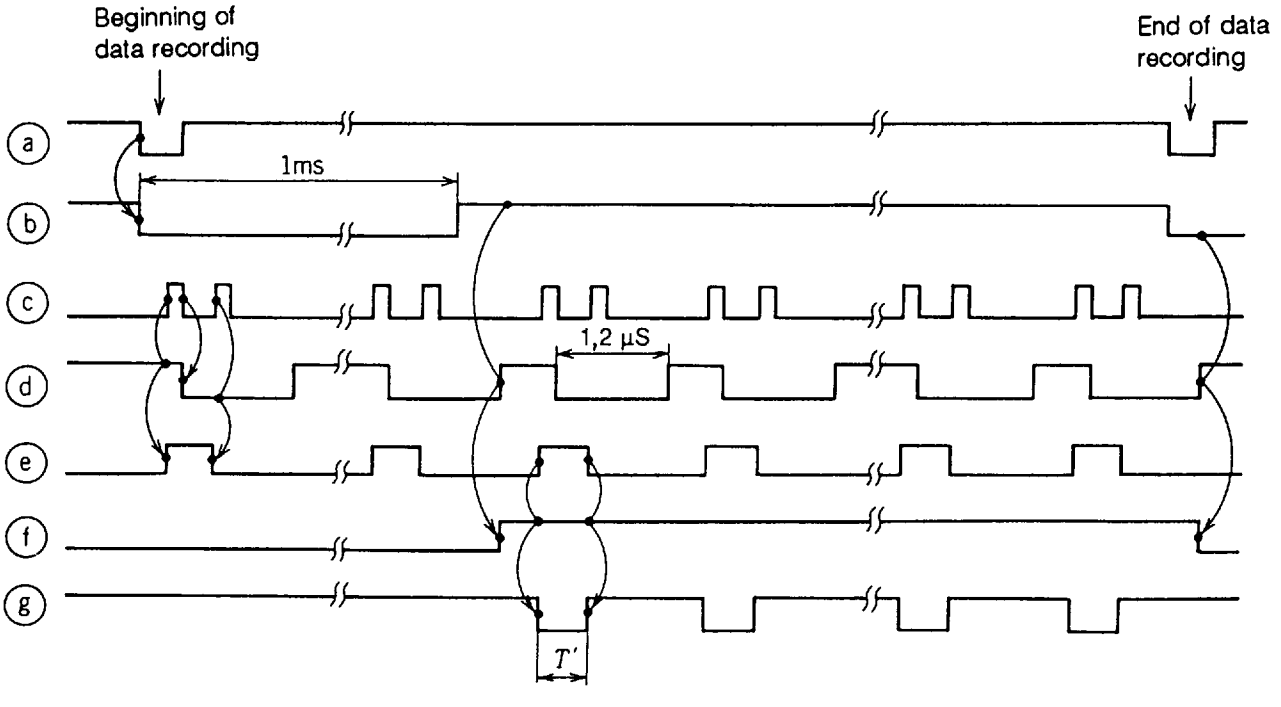

Figure H.2 - Timing diagram

Copyright International Organization for Standardization
Provided by IHS under license with ISO
No reproduction or networking permitted without license from IHS
Not for Resale

4851903 0578691 058

Annex J
(informative)
Servo track recording conditions

This annex explains the conditions for recording the servo signal.

J.1 Recording current

The recording current should be (200 ± 2) % of the current generated by the Reference Field when the f_1 signal is recorded on servo track 254,5.

J.2 Direct current erase

Direct current erase should precede recording action. The erase current (d.c.) should be approximately equal to the recording current (Iq) (see figure 1).

J.3 Rotational speed of the disk

The rotational speed of the disk should be 360,0 rpm ± 3,6 rpm. The direction of rotation should be counter-clockwise as seen from Side 0 of the Flexible Disk Cartridge.

J.4 Effective track width of magnetic head

The effective track width of the magnetic head when recording the servo signal should be 0,061 mm ± 0,001 mm.

Copyright International Organization for Standardization
Provided by IHS under license with ISO
No reproduction or networking permitted without license from IHS
Not for Resale

Annex K

(informative)

Method for measuring fluctuation of the Servo Data amplitude

K.1 General

The displacement due to the amplitude fluctuation of Servo Data should be measured using the measuring instruments shown in figure K.1.

K.2 Test equipment

K.2.1 Disk drive

The disk drive should be as specified in D.2.1 of annex D.

K.2.2 Head

The head should be as specified in D.2.2 of annex D.

K.2.3 Read amplifier

The read amplifier should be as specified in D.2.3.1 of annex D.

K.2.4 Servo Identifier detector

Receives the signal from the read amplifier and detects the Servo Identifier signal.

K.2.5 Timing generator

Receives the Servo Identifier signal and generates the timing pulses which indicate the beginning of the following Servo Data.

K.2.6 Peak detector

Receives the signal from the read amplifier and detects the radial displacement of the magnetic head from the signal amplitude of the Servo Data.

K.2.7 Arithmetic controller

Receives the signal of magnetic head displacement from the peak detector and timing pulses from the timing generator, then calculates the location which specified in 13.5 to generate the signal for moving the magnetic head.

K.2.8 Displacement meter

An optical displacement meter is installed on the pulse motor to detect the displacement of magnetic head on each servo sector.

K.2.9 Fast Fourier Transform device (FFT)

This device receives 39 timing pulses from the timing generator and 39 signals of magnetic head displacement from the displacement meter in one revolution, and calculates their Fourier Transform. The first and second order eccentricity components are eliminated, and the remaining higher order eccentricity components are used to determine the fluctuation of the Servo Data amplitude.

Copyright International Organization for Standardization
Provided by IHS under license with ISO
No reproduction or networking permitted without license from IHS Not for Resale

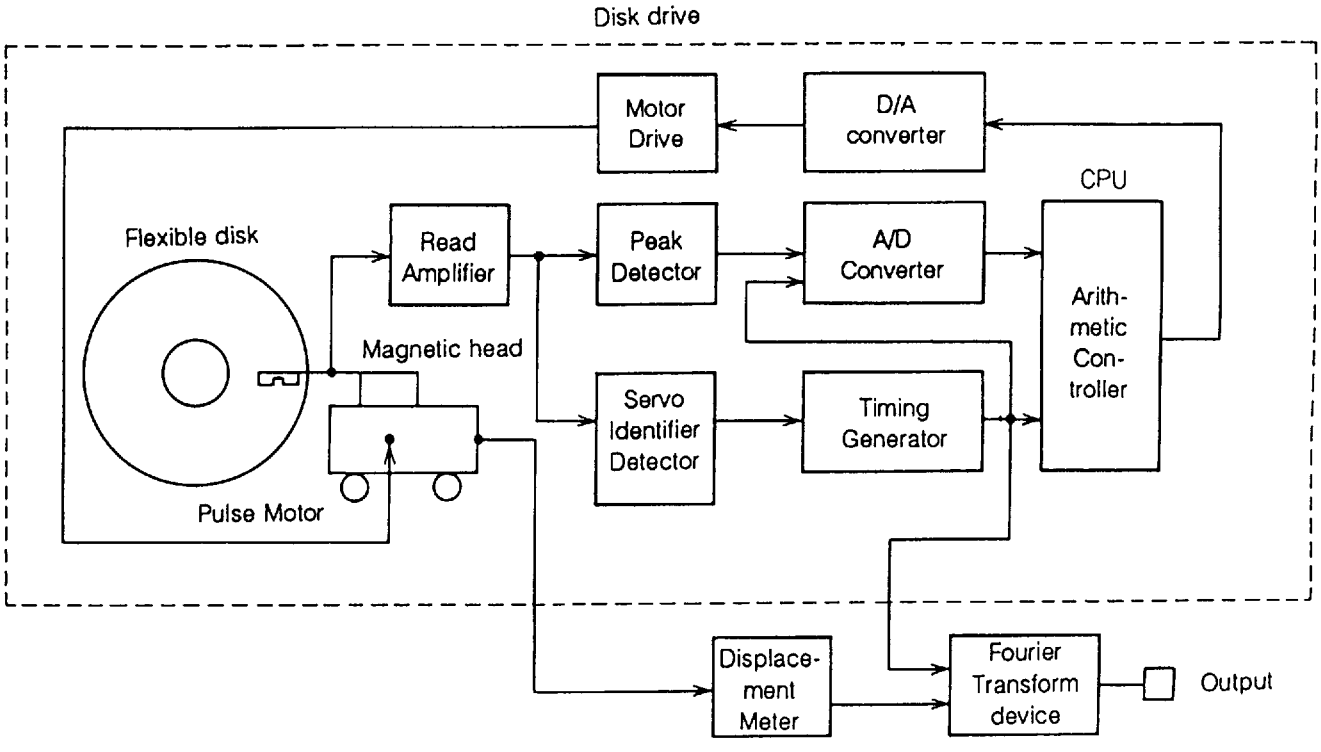

Figure K.1 - The instruments which measures the amplitude fluctuation of Servo Data

Copyright International Organization for Standardization
Provided by IHS under license with ISO
No reproduction or networking permitted without license from IHS
Not for Resale

Annex L

(informative)

Supply of Secondary Standard Reference Flexible Disk Cartridges

L.1 Institute

The Secondary Standard Reference Flexible Disk Cartridge is available from the following institute;

Reliability Centre for Electronic Components of Japan (RCJ)

Address: 1-1-12 Hachiman-cho, Higashikurume, Tokyo 203, Japan

Facsimile: +81-424-72-4961

Telephone: +81-424-71-5142

NOTE - When the order is made by Facsimile, the Facsimile number of the purchaser should be clearly stated.

L.2 Part number

The Secondary Standard Reference Flexible Disk Cartridges can be ordered by the following Part number; JRM 6227 (90 mm, 33 157 ftprad, two sides).

Copyright International Organization for Standardization
Provided by IHS under license with ISO
No reproduction or networking permitted without license from IHS Not for Resale

4851903 0578695 7T3

© ISO/IEC

ICS 35.220.20

Descriptors: data processing, information interchange, data recording, data recording devices, magnetic recording, servo track recording, magnetic disks, flexible disk cartridges, definitions, specifications, dimensions, physical properties, magnetic properties, track formats, interchangeability.

Price based on 52 pages

Copyright International Organization for Standardization
Provided by IHS under license with ISO
No reproduction or networking permitted without license from IHS

Not for Resale