INTERNATIONAL STANDARD

ISO/IEC 13403

First edition
1995-12-15

Information technology — Information interchange on 300 mm optical disk cartridges of the write once, read multiple (WORM) type using the CCS method

Technologies de l'information — Échange d'information sur cartouches de disque optique de 300 mm *de diamètre du type écriture unique-lecture multiple (WORM) utilisant la méthode CCS*

Reference number
ISO/IEC 13403:1995(E)

Copyright International Organization for Standardization
Provided by IHS under license with ISO
No reproduction or networking permitted without license from IHS

Not for Resale

Contents

Page

Section 1 : General 1

1 Scope 1
2 Conformance 1
3 Normative references 1
4 Definitions 2

4.1 Case 2
4.2 Clamping zone 2
4.3 Control track 2
4.4 Cyclic redundancy check (CRC) 2
4.5 Defects management 2
4.6 Disk reference plane 2
4.7 Entrance surface 2
4.8 Error correction code (ECC) 2
4.9 Format 2
4.10 Holding feature 2
4.11 Interleaving 2
4.12 Mark 2
4.13 Optical disk 2
4.14 Optical disk cartridge 2
4.15 Recording layer 2
4.16 Reed-Solomon code 2
4.17 Sector 3
4.18 Space 3
4.19 Substrate 3
4.21 Track 3
4.22 Track pitch 3
4.23 WORM disk 3
4.24 Zone 3

5 Conventions 3

5.1 Representation of numbers 3
5.2 Names 3

6 Acronyms .....
7 General description of the optical disk cartridge 4
8 General requirements 4

8.1 Environments 4
8.1.1 Testing environment 4
8.1.2 Operating environment 4
8.1.3 Storage environment 5
8.1.4 Transportation 5

© ISO/IEC 1995
All rights reserved. Unless otherwise specified, no part of this publication may be reproduced or utilized in any form or by any means, electronic or mechanical, including photocopying and microfilm, without permission in writing from the publisher.

ISO/IEC Copyright Office • Case postale 56 • CH-1211 Genève 20 • Switzerland

Printed in Switzerland

Copyright International Organization for Standardization
Provided by IHS under license with ISO
No reproduction or networking permitted without license from IHS
Not for Resale

8.2 Safety requirements 5
8.3 Flammability 5

9 Reference drive 5

9.1 Optical system 6
9.2 Optical beam 6
9.3 Read channel 6
9.4 Tracking 6
9.5 Rotation of the disk 7

Section 2 : Mechanical and physical characteristics 8

10 Dimensional and physical characteristics of the case 8

10.1 General description of the case 8
10.2 Reference planes of the case 8
10.3 Dimensions of the case 8

10.3.1 Overall dimensions 8
10.3.2 Location hole 9
10.3.3 Alignment hole 9
10.3.4 Reference surfaces 9
10.3.5 Detents 10
10.3.6 Write-inhibit feature 10
10.3.7 Head and spindle access windows 11
10.3.8 Shutter, shutter opener and mis-insert protection feature 11

10.3.8.1 Shutter 11
10.3.8.2 Side shutter opener feature 11
10.3.8.3 Front shutter opener feature 12
10.3.8.4 Mis-insert protection feature 12

10.3.9 Loading grooves 12
10.3.10 Sensor holes 12
10.3.11 Gripper features 13

10.3.11.1 Gripper slots 13
10.3.11.2 Gripper holes 13

10.3.12 Label area 14

10.4 Mechanical characteristics 14

10.4.1 Material 14
10.4.2 Mass 14
10.4.3 Distortion 14
10.4.4 Compliance 14
10.4.5 Shutter opening force 15

11 Dimensional, mechanical and physical characteristics of the disk 15

11.1 General description of the disk 15
11.2 Reference axis and plane of the disk 15

Copyright International Organization for Standardization
Provided by IHS under license with ISO
No reproduction or networking permitted without license from IHS
Not for Resale

11.3 Dimensions of the disk 15

11.3.1 Centre zone 15
11.3.2 Clamping zone 16
11.3.3 Transition zone 16
11.3.4 Information zone 16
11.3.5 Rim zone 16

11.4 Mechanical characteristics 16

11.4.1 Material 16
11.4.2 Mass 16
11.4.3 Moment of inertia 16
11.4.4 Imbalance 16
11.4.5 Axial deflection 16
11.4.6 Axial acceleration 17
11.4.7 Radial runout 17
11.4.8 Radial acceleration 17
11.4.9 Tilt 17

11.5 Optical characteristics 18

11.5.1 Index of refraction 18
11.5.2 Thickness of the substrate 18
11.5.3 Birefringence 18
11.5.4 Reflectance 18

12 Interface between cartridge and drive 18

12.1 Clamping method 18
12.2 Hub 18
12.3 Clamping force 19
12.4 Capture cylinder 19
12.5 Disk position in operating condition 19

Section 3 : Format of information 33

13 Track geometry 33

13.1 Track shape 33
13.2 Direction of rotation 33
13.3 Track pitch 33
13.4 Track number 33

14 Track format 33

14.1 Track layout 33
14.2 Radial alignment 34
14.3 Sector number 34

15 Sector format 34

15.1 Sector layout 34
15.2 VFO fields 34

Copyright International Organization for Standardization
Provided by IHS under license with ISO
No reproduction or networking permitted without license from IHS Not for Resale

15.3 Address Sync (AS) 35
15.4 Address fields 35
15.5 Postambles (PA) 35
15.6 Mirror Field (MF) 36
15.7 Gap 36
15.8 Flag (FLG) 36
15.9 Laser Power Test field (LPT) 36
15.10 Data Sync (DS) 36
15.11 Data field 36

15.11.1 User data bytes 37
15.11.2 Address data bytes 37
15.11.3 CRC and ECC bytes 37
15.11.4 Resync bytes 37

15.12 Buffer field 37

16 Recording code 37

17 Format of the information zone 38

17.1 General description of the Information zone 38
17.2 Division of the Information zone 38

17.2.1 Mirror zone 39
17.2.2 PEP Control zone 39
17.2.3 Acquire zone 40
17.2.4 Test zones 40
17.2.5 SFP Control zones 40
17.2.6 Data zone 40
17.2.7 Buffer zone 40

18 Format of the data zone 40

18.1 Defect Management Areas 40
18.2 Disk Structure Table (DST) 41
18.3 User zone 42
18.4 WDL zone 43

19 Defect Management 43

19.1 Media initialization 43
19.2 Certification 43

19.2.1 Slipping algorithm 43
19.2.2 Linear replacement algorithm 43

19.3 Disks not certified 44
19.4 Write procedure 44
19.5 Primary Defect List (PDL) 44
19.6 Secondary Defect List (SDL) 45
19.7 Working Defect List (WDL) 46

Copyright International Organization for Standardization
Provided by IHS under license with ISO
No reproduction or networking permitted without license from IHS Not for Resale

Section 4 : Characteristics of embossed information 48

20 Method of testing 48

20.1 Environment 48
20.2 Use of the Reference Drive 48
20.2.1 Optics and mechanics 48
20.2.2 Read power 48
20.2.3 Read channels 48
20.2.4 Tracking 48

20.3 Definition of signals 49

21 Signals from grooves 51

21.1 Track-cross signal 51
21.2 Push-pull signal 51
21.3 On-track signal 51
21.4 Phase depth 51
21.5 Track location 51

22 Signals from headers 52

22.1 VFO1 and VFO2 52
22.2 Address Sync, Address field and Postamble 52

23 Signals from embossed recording fields 52
24 Signals from PEP control zone 53

Section 5 : Characteristcs of the recording layer 54

25 Method of testing 54

25.1 Environment 54
25.2 Reference Drive 54

25.2.1 Optics and mechanics 54
25.2.2 Read power 54
25.2.3 Read channel 54
25.2.4 Tracking 54

25.3 Write conditions 54

25.3.1 Write pulse 55

25.4 Definition of signals 55

26 Optical characteristics 56

26.1 Baseline reflectivity 56
26.2 Uniformity of reflectivity 56

--`,,```,,,,````-`-`,,`,,`,`,,`---

Copyright International Organization for Standardization
Provided by IHS under license with ISO
No reproduction or networking permitted without license from IHS Not for Resale

27 Read and write characteristics 56

27.1 Sensitivity of the recording layer 56

27.1.1 Optical conditions 56
27.1.2 Write power and writing conditions 56
27.1.3 Characteristics of the written marks 56
27.1.4 Definition and measurement conditions 57

27.2 Read characteristics 57

27.2.1 Optical conditions 57
27.2.2 Read power 57
27.2.3 Reflectivity characteristics 57
27.2.4 Carrier-to-noise ratio 57
27.2.5 Cross-talk 58
27.2.6 Timing jitter 58

Section 6 : Characteristics of user data 59

28 Method of testing 59

28.1 Environment 59
28.2 Reference Drive 59

28.2.1 Optics and mechanics 59
28.2.3 Read amplifiers 59
28.2.4 Analog-to-binary converters 59
28.2.5 Data clock 59
28.2.6 Binary-to-digital conversion 59
28.2.7 Error correction 60
28.2.8 Tracking 60

29 Minimum quality of a sector 60

29.1 Address fields 60
29.2 User-written data 60

30 Data interchnage requirements 60

30.1 Tracking 60
30.2 User-written data 60
30.3 Quality of disk 60

Annexes

A Distortion test 61

B Compliance test 63

C Track deviation measurement 64

D CRC for address fields 68

Copyright International Organization for Standardization
Provided by IHS under license with ISO
No reproduction or networking permitted without license from IHS Not for Resale

E Interleave, CRC, ECC and Resync for the data fields of a sector 69

F PEP control zone 73

G Control data of the SFP 78

H Guidelines for sector replacement 83

J Test method for the holding characteristics of the disk 84

K Derivation of the operating climatic environment for the ODC 86

L Description of the office environment 90

M Transportation guidelines 91

N Timing jitter measurement 92

Copyright International Organization for Standardization
Provided by IHS under license with ISO
No reproduction or networking permitted without license from IHS Not for Resale

Foreword

ISO (the International Organization for Standardization) and IEC (the International Electrotechnical Commission) form the specialized system for worldwide standardization. National bodies that are members of ISO or IEC participate in the development of International Standards through technical committees established by the respective organization to deal with particular fields of technical activity. ISO and IEC technical committees collaborate in fields of mutual interest. Other international organizations, governmental and non-governmental, in liaison with ISO and IEC, also take part in the work.

In the field of information technology, ISO and IEC have established a joint technical committee, ISO/IEC JTC 1. Draft International Standards adopted by the joint technical committee are circulated to national bodies for voting. Publication as an International Standard requires approval by at least 75 % of the national bodies casting a vote.

International Standard ISO/IEC 13403 was prepared by Joint Technical Committee ISO/IEC JTC 1, *Information technology*, Subcommittee SC 23, *Optical disk cartridges for information interchange*.

Annexes A to G and J form an integral part of this International Standard. Annexes H and K to N are for information only.

Copyright International Organization for Standardization
Provided by IHS under license with ISO
No reproduction or networking permitted without license from IHS
Not for Resale

Information technology - Information interchange on 300 mm optical disk cartridges of the write once, read multiple (WORM) type using the CCS method

Section 1 : General

1 Scope

This International Standard specifies the characteristics of 300 mm optical disk cartridges (ODC) of the WORM type providing for embossed information and for data to be written once and read multiple times.

It specifies

- the conditions for conformance testing and the reference drive;
- the mechanical and physical characteristics of the cartridge, so as to provide mechanical interchangeability between data processing systems;
- the format of the information on the disk, both embossed and user-written;
- the characteristics of the embossed information on the disk;
- the optical characteristics of the disk, enabling processing systems to write data onto the disk;
- the minimum quality of user-written data on the disk, enabling data processing systems to read data from the disk.

Together with the standard for Volume and File Structure, this International Standard provides for full data interchange between data processing systems. Interchange involves the ability to write and read data without introducing any error.

2 Conformance

A 300 mm optical disk cartridge is in conformance with this International Standard if it meets all mandatory requirements specified herein.

A drive claiming conformance with this International Standard shall be able, in the operating environment, to write on any optical disk cartridge which is in conformance with this International Standard and to read any such optical disk cartridge which has been written with any drive in conformance with this International Standard.

A drive shall not claim conformance if it cannot accept the full range of media conforming to this International Standard.

3 Normative references

The following standards contain provisions which,through reference in this text, constitute provisions of this International Standard. At the time of publication, the editions indicated were valid. All standards are subjected to revision, and parties to agreements based on this International Standard are encouraged to investigate the possibility

Copyright International Organization for Standardization
Provided by IHS under license with ISO
No reproduction or networking permitted without license from IHS Not for Resale

of applying the most recent editions of the standards indicated below. Members of IEC and ISO maintain registers of currently valid International Standards.

IEC 950: 1991, *Safety of information technology equipment, including electrical business equipment.*

IEC 721-3-3: 1994, *Classification of environmental conditions — Part 3: Classification of groups of environmental parameters and their severities. Section 3: Stationary use at weatherprotected locations.*

4 Definitions

For the purposes of this International Standard, the following definitions apply:

4.1 case : The housing for an optical disk, that protects the disk and facilitates disk interchange.

4.2 Clamping Zone : The annular part of the disk within which the clamping force is applied by the clamping device.

4.3 Control Track : A track containing the information on media parameters and format necessary for writing and reading the remaining tracks on the optical disk.

4.4 Cyclic Redundancy Check (CRC) : A method for detecting errors in data.

4.5 Defect Management : A method for handling defective areas on the disk.

4.6 Disk Reference Plane : A plane defined by the perfectly flat annular surface of an ideal spindle on to which the clamping zone of the disk is clamped, and which is normal to the axis of rotation.

4.7 entrance surface : The surface of the disk on to which the optical beam first impinges.

4.8 Error Correction Code (ECC) : An error detecting code designed to correct certain kinds of errors in data.

4.9 format : The arrangement or layout of information on the disk.

4.10 holding feature : The central feature on the disk which interacts with the spindle of the disk drive to provide the radial centring and the clamping force.

4.11 interleaving : The process of allocating the physical sequence of units of data so as to render the data more immune to burst errors.

4.12 mark : A feature of the recording layer which may take the form of a hole, a pit, a bubble or any other type of form that can be sensed by the optical system. The pattern of boundaries between marks and spaces represents the data on the disk.

4.13 optical disk : A disk that will accept and retain information in the form of marks in a recording layer, that can be read with an optical beam.

4.14 optical disk cartridge (ODC) : A device consisting of a case containing an optical disk.

4.15 recording layer : A layer of the disk on, or in, which data is written during manufacture and/or use.

4.16 Reed-Solomon code : An error detection and/or correction code which is particularly suited to the correction of errors which occur in bursts or are strongly correlated.

Copyright International Organization for Standardization
Provided by IHS under license with ISO
No reproduction or networking permitted without license from IHS Not for Resale

4.17 sector : The smallest addressable part of a track in the Information zone of a disk that can be accessed independently of other addressable parts of the zone.

4.18 space : A feature of the recording layer which takes no deformation by a hole, a pit, a bubble or any other type of form that can be sensed by the optical system. The pattern of boundaries between marks and spaces represents the data on the disk.

4.19 spindle : The part of the disk drive which contacts the holding feature.

4.20 substrate : A transparent layer of the disk, provided for mechanical support of the recording layer, through which the optical beam accesses the recording layer.

4.21 track : The path which is to be followed by the focus of the optical beam during one revolution of the disk.

4.22 track pitch : The distance between adjacent track centrelines, measured in a radial direction.

4.23 WORM disk : An optical disk in which the data in specified areas can be written only once and read multiple times by an optical beam.

4.24 Zone : An annular area of the disk.

5 Conventions

5.1 Representation of numbers

- A measured value is rounded off to the least significant digit of the corresponding specified value. It implies that a specified value of 1,26 with a positive tolerance of +0,01, and a negative tolerance of -0,02 allows a range of measured values from 1,235 to 1,275 but not including 1,275.

- Letters and digits in parentheses represent numbers in hexadecimal notation.

- The setting of a bit is denoted by ZERO or ONE.

- Numbers in binary notation and bit combinations are represented by strings of ZEROs and ONEs.

- Numbers in binary notation and bit combinations are shown with the most significant bit to the left.

- Negative values of numbers in binary notation are given in TWO's complement.

- In each field the data is recorded so that the most significant byte (byte 0) is recorded first. Within each byte the least significant bit is numbered 0 and is recorded last, the most significant bit (numbered 7 in an 8-bit byte) is recorded first. This order of recording applies also to the data input of the Error Detection and Correction circuits and to their output.

5.2 Names

The names of entities, e.g. specific tracks, fields, etc., are given with a capital initial.

6 Acronyms

AS	Address Sync
CCS	Continuous Composite Servo (tracking method)

Copyright International Organization for Standardization
Provided by IHS under license with ISO
No reproduction or networking permitted without license from IHS Not for Resale

CRC	Cyclic Redundancy Check
DMA	Defect Management Area
DS	Data Sync
DST	Disk Structure Table
ECC	Error Correcting Code
LPT	Laser Power Test field
MF	Mirror Field
ODC	Optical Disk Cartridge
PA	Postamble
PDL	Primary Defect List
PEP	Phase Encoded Part
RLL(1,7)	Run Length Limited (code)
SDL	Secondary Defect List
SFP	Standard Format Part
VFO	Voltage Frequency Oscillator
WDL	Working Defect List
WORM	Write-Once and Read Multiple

7 General Description of the optical disk cartridge

The optical disk cartridge which is the subject of this International Standard consists of a case containing an optical disk. An optical beam is used to write data to, or to read data from, the disk.

The case is a protective enclosure for the disk. It has access windows covered by a shutter. The windows are automatically uncovered by the drive when the cartridge is inserted into it.

The disk is described in clause 11.

8 General requirements

8.1 Environments

8.1.1 Testing environment

The test environment is defined as an environment where the air immediately surrounding the optical disk cartridge has the following properties:

Temperature	: 23 °C ±2 °C
Relative humidity	: 45 % to 55 %
Atmospheric pressure	: 75 kPa to 105 kPa
Air cleanliness	: see annex L.

No condensation on or in the optical disk cartridge shall occur. Before testing the optical disk cartridge shall be conditioned in this environment for 24 h minimum. It is recommended that before testing the entrance surface of the optical disk shall be cleaned according to the instructions of the manufacturer of the disk.

8.1.2 Operating environment

The International Standard guarantees that an optical disk cartridge which meets all requirements of this International Standard in the specified test environments, provides data interchange over the specified ranges of environmental parameters in the operating environment.

Copyright International Organization for Standardization
Provided by IHS under license with ISO
No reproduction or networking permitted without license from IHS Not for Resale

The operating environment is defined as an environment where the air immediately surrounding the optical disk cartridge has the following properties:

Temperature	: 10 °C to 50 °C
Relative humidity	: 3 % to 80 %
Absolute humidity	: 1 g per m^3 to 25 g per m^3
Atmospheric pressure	: 75 kPa to 105 kPa
Temperature gradient	: 10 °C per h max.
Temperature shock	: 20 °C max.
Relative humidity gradient	: 10 % per h max.

No condensation on or in the ODC shall occur. If an ODC has been exposed to conditions outside those specified in this clause, it shall be acclimatized in an allowed operating environment for at least 2 h before use. (See also annex K.)

NOTE – The range of operating environments is based on the assumption that the drive is in an office environment (see annex L) and that the temperature inside the drive can be up to 20 °C higher than the temperature outside the drive. Under this condition a cartridge shall withstand the specified temperature shock when either loaded into or unloaded from the drive.

8.1.3 Storage environment

The optical disk cartridge without any protective enclosure shall not be stored in an environment outside the range allowed for storage. The storage environment is defined as an environment where the air immediately surrounding the optical disk cartridge has the following properties:

Temperature	: -10 °C to 50 °C
Relative humidity	: 3 % to 90 %
Absolute humidity	: 1 g per m^3 to 25 g per m^3
Atmospheric pressure	: 65 kPa to 105 kPa
Temperature gradient	: 15 °C per h max.
Relative humidity gradient	: 10 % per h max.

No condensation on or in the optical disk cartridge shall occur.

8.1.4 Transportation

This International Standard does not specifc requirements for transportation. Guidance for transportation is given in annex M.

8.2 Safety requirements

The cartridge shall satisfy the safety requirements of IEC 950, when used in the intended manner or in any foreseeable use in an information processing system.

8.3 Flammability

The cartridge and its components shall be made from materials that comply with the flammability class foı HB materials, or better, as specified in IEC 950.

9 Reference Drive

The Reference Drive is a drive of which several critical components have well defined properties, and which is used to test write and read parameters of the disk for conformance to this International Standard. The critical components

Copyright International Organization for Standardization
Provided by IHS under license with ISO
No reproduction or networking permitted without license from IHS Not for Resale

vary from test to test. This clause gives an outline of all components; components critical for tests in specific clauses only are specified in those clauses.

9.1 Optical system

The basic set-up of the optical system of the Reference Drive used for measuring the write and read parameters is shown in figure 1.

Different components and locations of components are permitted, provided that the performance remains the same as that of the set-up in figure 1. The optical system shall be such that the detected light reflected from the entrance surface of the disk is minimized so as not to influence the accuracy of the measurements.

The output Channel 1 is the sum of the currents through photo-diodes J_1, J_2, J_3 and J_4, and is used for reading embossed marks and user-written marks. The output of Channel 2 is the difference between current of photo-diodes J_1 and J_3 and current of photo-diodes J_2 and J_4, and shall be used for the axial tracking.

9.2 Optical beam

The focussed optical beam used for writing and reading data shall have the following properties:

Wavelength (λ) :780 nm $^{+15}_{-10}$nm

Wavelength (λ) divided by the numerical aperture of the objective lens (NA) :λ /NA = 1,475 mm ±0,035 mm

Filling D/W of the aperture of the objective lens :1,0 max.

Variance of the wavefront of the optical beam near the recording layer : λ^2/180 max.

The optical power and pulse width for writing and reading shall be as specified in 25.2.2, 25.3, 27.2.2 and 28.2.2.

Polarization : circular

D is the diameter of the lens aperture and W is the beam diameter of the Gaussian beam where the intensity is $1/e^2$ of the maximum intensity.

9.3 Read channel (See annex N.)

A read channel shall be provided to generate signals from the marks in the recording layer. Channel 1 shall be used for reading the embossed marks and reading the user-written marks.

The read amplifier after the photo-detectors in Channel 1 shall have a flat response within ±1 dB from 100 kHz to 23 MHz.

9.4 Tracking

The Tracking channel of the drive provides the tracking error signals to control the servos for the radial tracking of the optical beam. The radial tracking error is generated by a split photo-diode detector in the tracking channel. The division of the diode runs parallel to the image of the tracks on the diode.

Copyright International Organization for Standardization
Provided by IHS under license with ISO
No reproduction or networking permitted without license from IHS Not for Resale

The requirements for the accuracy with which the focus of the optical beam must follow the tracks is specified in 20.2.4.

9.5 Rotation of the disk

The spindle shall position the disk as specified in 12.5. It shall rotate the disk at 25,0 ±0,2 Hz. The reference drive shall be able to rotate both directions. The direction of rotation is determined by the sensor hole that indicates side A or side B of the cartridge.

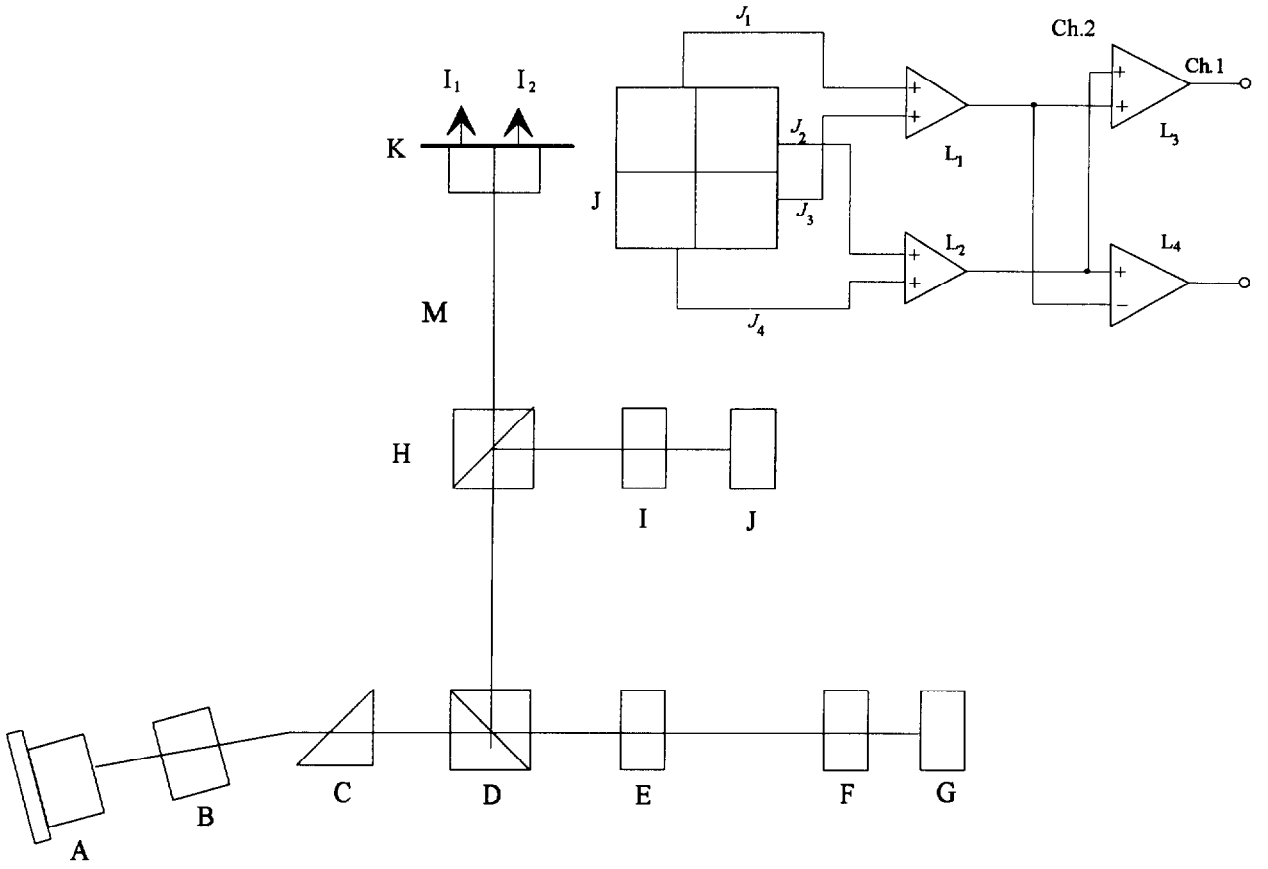

ECMA-93-0117-A

A	Laser diode	H	Beam splitter
B	Collimator lens	I	Cylindrical/spherical lens
C	Optional shaping prism	J	Qadrant photodiode
D	Polarizing beam splitter	K	Split photodiode
E	Quarter-wave plate	$L_{1,2,3,4}$	DC-coupled amplifier
F	Objective lens	M	Tracking channel
G	Optical disk	(See 20.3.)	

Figure 1 - Optical System of the Reference drive

Copyright International Organization for Standardization
Provided by IHS under license with ISO
No reproduction or networking permitted without license from IHS
Not for Resale

Section 2 : Mechanical and physical characteristics

10 Dimensional and physical characteristics of the case

10.1 General description of the case

The case is a rigid protective container (box) of rectangular shape (See figure 2.). It includes a shutter which uncovers access windows upon insertion into the drive, and automatically covers them upon removal from the drive. The case shall have means for positioning and identifying the cartridge, and it has a (one) write inhibit feature.

10.2 Reference planes of the case (See figure 2.)

The dimensions of the case are referred to three orthogonal reference planes X, Y and Z. The case shall be constrained such that the four reference surfaces S1 to S4 on one side of the case lie in plane Z when measuring those dimensions of the case in clause 10.3 which are referenced to this plane. The intersection of the three planes defines the centre of the radius for the bottom corner of the triangular Location hole (See figure 3.). The centres of the radii for the two bottom corners of the rectangular Alignment hole shall lie in the X plane (See figure 3.). A dimension of a feature referenced to one of the planes is the shortest distance from the feature to the plane.

10.3 Dimensions of the case

The dimensions of the case shall be measured in the test environment.

10.3.1 Overall dimensions (See figure 3.)

The total length of the case shall be

$L_1 = 340{,}0 \text{ mm} \pm 0{,}6 \text{ mm}$ (at testing environment)

$= 340{,}0 \text{ mm} \, {}^{+1,5}_{-1,1} \text{ mm}.$ (at operating environment).

The distance from the bottom of the case to reference plane X shall be

$L_2 = 35{,}0 \text{ mm} \pm 0{,}3 \text{ mm}.$

The distance from the top of the case to reference plane X shall be

$L_3 = 305{,}0 \text{ mm} \pm 0{,}3 \text{ mm}.$

The total width of the case shall be

$L_4 = 320{,}0 \text{ mm} \pm 0{,}6 \text{ mm}$ (at testing environment)

$= 320{,}0 \text{ mm} \, {}^{+1,5}_{-1,1} \text{ mm}$ (at operating environment).

The distance from the left hand side of the case to reference plane Y shall be

$L_5 = 300{,}0 \text{ mm} \, {}^{0,0}_{-0,5} \text{ mm}.$

The distance from the right hand side of the case to reference plane Y shall be

$L_6 = 20{,}0 \text{ mm} \pm 0{,}2 \text{ mm}$

$R_1 = 5{,}0 \text{ mm} \pm 1{,}0 \text{ mm}.$

The thickness of the case shall be

$L_7 = 17{,}0 \text{ mm} \pm 0{,}4 \text{ mm}$ (at testing environment)

$= 17{,}0 \text{ mm} \pm 0{,}8 \text{ mm}$ (at operating environment).

The eight long edges of the case shall be rounded with a radius

$R_2 = 0{,}5 \text{ mm max}.$

Copyright International Organization for Standardization
Provided by IHS under license with ISO
No reproduction or networking permitted without license from IHS Not for Resale

10.3.2 Location hole (See figure 3.)

The Location hole shall have a rounded triangular shape.
The corners shall be rounded with a radius

$R_3 = 5{,}0$ mm ± 0,1 mm.

The centre of the radius of the bottom corner shall be the point of the intersection of the planes X, Y and Z. The angle of this corner shall be

$\theta_1 = 30° \pm 1°$

$L_8 = 18{,}0$ mm $^{+0,3}_{+0,1}$ mm

The Location hole shall be held to a depth

$L_9 = 1{,}5$ mm min.

Below $L9$ the Location hole shall extend to

$L_{10} = 8$ mm min.

with an area equal to, or greater than the Location hole.
The Location hole shall not extend through Side B.
The lead-in edges shall be rounded with a radius

$R_4 = 0{,}5$ mm max.

10.3.3 Alignment hole (See figure 3.)

The Alignment hole shall have a rounded rectangular shape. The vertical centre line of the hole shall lie

$L_{11} = 280{,}0$ mm ± 0,2 mm

from reference plane Y.
Its dimensions shall be

$L_{12} = 18{,}0$ mm $^{+0,3}_{+0,1}$ mm

$L_{13} = 14{,}0$ mm ± 0,5 mm.

The corners shall be rounded with a radius

$R_5 = 5{,}0$ mm ± 0,5 mm.

The centres of the radii for the bottom corners shall lie in plane X. The Alignment hole shall be held to a depth L_9, below which the Alignment hole shall extend to L_{10}, with dimensions equal to, or greater than, L_{12} and L_{13}, respectively.
The Alignment hole shall not extend through Side B.
The lead-in edges shall be rounded with a radius R_4.

10.3.4 Reference surfaces (See figure 4.)

Each side of the case shall contain four reference surfaces S_1, S_2, S_3 and S_4.

Surfaces S_1 and S_2 shall be circular with a diameter

$D_1 = 24{,}0$ mm min.

The centre of S_1 shall be located on the plane Y and

$L_{14} = 4{,}0$ mm ± 0,2 mm

above the plane X.
The centre of S_2 shall be centred at

$L_{15} = 280{,}0$ mm ± 0,3 mm

from the plane Y and

$L_{16} = 4{,}0$ mm ± 0,2 mm

Copyright International Organization for Standardization
Provided by IHS under license with ISO
No reproduction or networking permitted without license from IHS Not for Resale

above the plane X.

Surfaces S_3 and S_4 shall be circular with a diameter

D_2 = 16,0 mm min.

with their centres located at

L_{17} = 255,0 mm ± 0,3 mm

from the plane X and

L_{18} = 5,0 mm ± 0,2 mm

L_{19} = 270,0 mm ± 0,3 mm

from the plane Y respectively.

All of the reference surfaces S_1, S_2, S_3 and S_4 shall be recessed from a case surface with a depth

$$L_{20} = \frac{(5,2 - t)}{2} \text{ mm}$$

where t is the enveloped disk thickness.

10.3.5 Detents (See figure 5.)

The case shall have four symmetrical detent slots intended for positioning or autoloading the cartridge.

The centre of two upper slots shall be located at a distance

L_{21} = 60,0 mm ± 0,3 mm

from the top of the case and the centres of the two lower slots shall be located at a distance $L21$ from the bottom of the case.

Each slot shall have a triangular shape with a width of

L_{22} = 8,0 mm ± 0,1 mm

and an opening angle

$\theta_2 = 90° \pm 1°$.

The root of each slot shall be rounded with a radius

R_6 = 3,0 mm max.

The corners of each slot shall be rounded with a radius

R_7 = 1,0 mm max.

The slots shall not extended through the full thickness of the case. When viewed from the A side, the right side slots shall be constrained toside A and the left side slots shall be constrained to side B.

10.3.6 Write-inhibit feature (See figure 6.)

The case shall have a(one) common write-inhibit feature for both side A and B. The centre of the write-inhibit feature is A and B. The centre of the write-inhibit feature is located on the plane X and

L_{23} = 20,0 mm ± 0,1 mm

from the plane Y. Opening of the feature shall be square with the domension specified by

L_{24} = 8,0 mm ± 0,2 mm.

The closed condition of the opening shall defines the write enabled condition, the opened condition of the opening shall defines the write inhibited condition. The surface of the movable piece of the feature shall be at the position

L_{25} = 0,5 mm max.

when in closed position.

The four corners of the opening shall be rounded with a radius

R_8 = 0,5 mm max.

Copyright International Organization for Standardization
Provided by IHS under license with ISO
No reproduction or networking permitted without license from IHS Not for Resale

10.3.7 Head and spindle access windows (See figure 7.)

Each side of the case shall have a window to enable the spindle and the optical head of the drive to access the disk. The dimensions of each head access and spindle access windows are referenced to a centre line, located at a distance

L_{26} = 140,0 mm ± 0,2 mm

from plane Y.

The width of the window shall be given by

L_{27} = 35,0 mm min.

The bottom of the window shall be at a distance

L_{28} = 167,0 mm max.

from plane X.

The centre of the spindle access circular window shall be defined by L_{29}

L_{29} = 122,0 mm ± 0,2 mm

from plane X, and a diameter of the circular window shall be

D_3 = 80,0 mm min.

The top of the head access window shall be located at a distance

L_{30} = 289,0 mm min.

from plane X.

The corners of the window shall be rounded with a radius

R_9 = 5,0 mm max.

10.3.8 Shutter, shutter opener and mis-insert protection feature (See figure 8.)

The case shall contain a shutter and shutter opener features.

10.3.8.1 Shutter

The cartridge case shall have a spring-loaded shutter, that shall completely cover the head and spindle access windows when closed. When opened, the shutter shall expose the windows up to at least the minimum size for the circle specified in 10.3.7. The drive shall use either the side shutter opener feature, or the front shutter opener feature to open the shutter.

10.3.8.2 Side shutter opener feature

The side shutter opener feature shall be provided in the right side loading groove viewing from side A. The movement of the shutter shall be controlled with the movement of the movable piece in the loading groove. The surface of the movable piece shall be recessed

L_{31} = 0,3 mm max.

from the bottom of the loading groove. The width of the opening for the movable piece shall be

L_{32} = 5,0 mm ± 0,2 mm.

The dimension of the leading groove at the corner of the case shall be

L_{33} = 5,0 mm ± 0,2 mm

L_{34} = 9,0 mm $^{+1,0}_{-0,0}$ mm

The position of the movable piece in shutter opening mechanism, when the shutter opened completely, shall not exceed

L_{35} =110,0 mm min.

The shutter opening stroke of the movable piece shall be completed at the position of

L_{36} = 108 mm max.

from the top of the case. At the bottom of left side groove, a trench shall be provided for the escapement of the

Copyright International Organization for Standardization
Provided by IHS under license with ISO
No reproduction or networking permitted without license from IHS
Not for Resale

shutter opening provision in a drive. The width, depth and length of the trench shall be defined by L_{32}, L_{34} and L_{35} respectively.

10.3.8.3 Front shutter opener feature

The front shutter opener feature is a notch located at the front of the shutter. The notch shall be located at a distance

L_{37} = 108,0 mm ± 0,4 mm

from plane Y and

L_{38} = 5,7 mm ± 0,2 mm

from the plane Z. The dimension of the hole shall be

L_{39} = 19,0 mm $^{+0,4}_{-0,0}$ mm

in length,

L_{40} = 5,6 mm $^{+0,3}_{-0,0}$ mm

in width and

L_{41} = 6,0 mm $^{+0,3}_{-0,0}$ mm

in depth.

10.3.8.4 Mis-insert protection feature

The mis-insert protection feature shall be provided in both loading grooves.

10.3.9 Loading grooves (See figure 9.)

Both sides of the case shall contain grooves for loading, and mis- protection feature to prevent the cartridge from being inserted improperly.
The case shall have loading grooves in both sides, the cross sectional dimensions are specified by

L_{42} = 4,0 mm ± 0,1 mm

L_{43} = 1,0 mm ± 0,1 mm

L_{44} = 4,0 mm min.

L_{45} = 9,0 mm min.

10.3.10 Sensor holes (See figure 10.)

The case shall have two sets of three media sensor holes to identify the following conditions:

	LOCATION	OPEN	CLOSE
SIDE A / SIDE B	OUTER	A	B
MEDIA REFLECTANCE		7% ~ 23%	5% ~ 50%
SPARE	INNER	---	---

The set of holes at the lower left hand corner of Side A of the case pertains to Side A of the disk. The holes shall extend through the case, and have a diameter of

D_4 = 8,0 mm ± 0,1 mm

The positions of their centres shall be specified by

L_{46} = 20,0 mm ± 0,2 mm

from the plane X and

Copyright International Organization for Standardization
Provided by IHS under license with ISO
No reproduction or networking permitted without license from IHS Not for Resale

L_{47} = 5,0 mm ± 0,2 mm

L_{48} = 20,0 mm ± 0,2 mm

L_{49} = 35,0 mm ± 0,2 mm

L_{50} = 275,0 mm ± 0,3 mm

L_{51} = 260,0 mm ± 0,3 mm

L_{52} = 245,0 mm ± 0,3 mm

from the plane Y.

10.3.11 Gripper features (See figure 11.)

The case shall have two separate gripper features intended for autoloading. These features are described in 10.3.11.1 and 10.3.11.2.

10.3.11.1 Gripper slots

The case shall have four symmetrical gripper slots. The slot shall have a depth of

L_{53} = 14,0 mm ± 0,3 mm

from the edge of the case and a width of

L_{54} = 10,0 mm ± 0,3 mm.

The lower edge of a slot shall be

L_{55} = 12,0 mm ± 0,3 mm

above the bottom of the case. The lower edge of the slot is recessed by

$L56$ = 6,0 mm ± 0,3 mm

from the side surfaces of the case.

The top outer corner of each slot shall be rounded with a radius

R_{10} = 3,0 mm max.

The inner corners and lower outer corner of each slot shall be rounded with a radius

R_{11} = 1,0 mm max.

10.3.11.2 Gripper holes

The case shall have two symmetrical gripper holes. The centre of each hole shall be located at a distance

L_{57} = 75,0 mm ± 0,3 mm

from each side of the case, and shall be located at a distance

L_{58} = 14,0 mm ± 0,3 mm

from the bottom of the case.

Each hole is defined by a rectangular shape having a width of

L_{59} = 12,0 mm ± 0,3 mm

and a length of

L_{60} = 10,0 mm ± 0,3 mm.

The corners of each hole shall be rounded with a radius

R_{12} = 3,0 mm max.

Each hole shall extend through the thickness of the case.

The opening of each gripper hole from the surface of the case shall extend

L_{61} = 7,0 mm ± 0,2 mm

into the thickness of the case.

The opening shall have a width of

L_{62} = 19,0 mm ± 0,3 mm

and a length of

Copyright International Organization for Standardization
Provided by IHS under license with ISO
No reproduction or networking permitted without license from IHS
Not for Resale

L_{63} = 16,0 mm ± 0,3 mm
extending from the top edge of a hole.

The top corners of the opening shall be rounded with a radius
R_{13} = 3,0 mm max.
The bottom corners of the opening shall be rounded with a radius
R_{14} = 1,0 mm max.
All edges of the holes and extentions shall be rounded with a radius
R_{15} = 0,5 mm max.

10.3.12 Label area (See figure 12.)

The case shall have the following minimum areas for user labels:
- on Side A and Side B : 69,0 mm * 206,0 mm
- on the bottom side : 10,0 mm * 250,0 mm

These areas shall be recessed by 0,2 mm min. Their positions are specified by the following dimensions and relations between dimensions (See figure 12.).

L_{64} = 64,0 mm max.
$L_{65} - L_{64}$ = 206,0 mm max.
L_{66} = 187,0 mm max.
$L_{67} - L_{66}$ = 69,0 mm max.
$L_4 - 2 * L_{68}$ = 250,0 mm max.
$L_7 - 2 * L_{69}$ = 9,0 mm max.
All corners of the Label areas shall be rounded with a radius
R_{16} = 3,0 mm max.

10.4 Mechanical characteristics

10.4.1 Material

The case shall be constructed from any suitable materials such that it meets the requirements of this International Standard. The dimensions of the case in an operating environment can be estimated from the dimensions in 10.3.

10.4.2 Mass

The mass of the case without the optical disk shall not exceed 850 g.

10.4.3 Distortion

The cartridge shall meet the requirement of the distortion test defined in annex A. The requirement guarantees that a cartridge can be inserted into the slot of a drive.

10.4.4 Compliance

The cartridge shall meet the requirement of the compliance (flexibility) test defined in annex B. The requirement guarantees that a cartridge can be constrained in the proper plane of operation within the drive.

Copyright International Organization for Standardization
Provided by IHS under license with ISO
No reproduction or networking permitted without license from IHS
Not for Resale

10.4.5 Shutter opening force

The spring force on the shutter shall be such that the force required to open the shutter does not exceed 5 N. It shall be sufficiently strong to close a free-sliding shutter, irrespective of the orientation of the case.

11 Dimensional, mechanical and physical characteristics of the disk

11.1 General description of the disk

The disk includes two facing circular substrates with some additional mechanical features joining the substrates. A recording layer shall be coated on one (single sided) or both (double sided) inner surfaces (see figure 13.). The information zone of the substrate is transparent to allow an optical beam to focus on the recording layer through the substrate. Pre-formatted information is included in the recording layer to allow the optical beam to follow a spiral track through the information zone. In the case of a double sided media, one side shall have a reverse spiral direction from the other. For single sided media, either spiral direction is allowed. The centre zone of the substrates provides the interface with the spindle of the drive. This interface provides the radial centering, axial positioning and clamping area of the disk.

11.2 Reference axis and plane of the disk

The dimensions of the disk are referred to a reference axis A and a reference plane P. P is defined by the perfectly flat annular surface of an ideal spindle onto which the clamping zone of the disk is clamped, and which is normal to the axis of rotation of this spindle. Axis A passes through the centre of the centre hole of the holding feature, and is normal to plane P.

11.3 Dimensions of the disk

The outer diameter of the disk shall be

$$300{,}0 \text{ mm } {}^{+5,0}_{-0,0} \text{ mm}.$$

The disk is divided into five annular zones, which are, from the centre to the outer edge, centre zone, clamping zone, transition zone, information zone and rim zone.

The nominal value of the thickness of the disk except centre zone shall be in the range of

2,4 mm to 5,2 mm

the tolerances for each nominal value of the thickness shall be within ± 0,2 mm.

The centre of all radii in 11.3 lie on axis A.

The positions of the top and bottom surfaces of the disk include changes due to the axial deflection of the disk and variations in the overall thickness of the disk, caused by e.g. the protective layer and/or adhesive labels.

The dimensions of the disk shall be measured in the test environment.

11.3.1 Centre zone (See figure 13.)

The centre hole shall have a diameter

$$D_5 = 35{,}0 \text{ mm } {}^{+0,1}_{-0,0} \text{ mm}.$$

The centre zone shall extend from the centre of the disk to

$$R_{17} = 30{,}0 \text{ mm} \pm 0{,}2 \text{ mm}.$$

Copyright International Organization for Standardization
Provided by IHS under license with ISO
No reproduction or networking permitted without license from IHS Not for Resale

11.3.2 Clamping zone (See figure 13.)

The clamping zone shall extend from R_{17} to
R_{18} = 38,0 mm ± 0,2 mm.

11.3.3 Transition zone

The transition zone shall extend from R_{18} to
R_{19} = 64,0 mm ± 0,1 mm.

11.3.4 Information zone

The information zone shall extend from R_{19} to
R_{20} = 142,0 mm ± 0,1 mm.

11.3.5 Rim zone

The rim zone shall extend from R_{20} to media edge.

11.4 Mechanical characteristics

All requirements in this clause must be met in the operating environment.

11.4.1 Material

The disk shall be made from any suitable materials such that it meets the requirements of this International Standard. The only material properties specified by this International Standard are the properties of the substrate in the Information zone. The dimensions of the disk in an operating environment can be estimated from the dimensions in 11.3.

11.4.2 Mass

The mass of the disk shall be 600 g max.

11.4.3 Moment of inertia

The moment of inertia of the disk relative to axis A shall be 6,0 g·m^2 max.

11.4.4 Imbalance

The imbalance of the disk relative to axis A shall not exceed 0,08 g·m.

11.4.5 Axial deflection

The axial deflection of the disk in the Information zone is measured as the axial deviation of the recording layer, as seen by the optical head of the Reference Drive (see clause 9). Thus it comprises the tolerances on the thickness of the substrate, on its index of refraction and the deviation of the entrance surface from plane P. The nominal position of the recording layer with respect to reference plane P is determined by the nominal thickness of the substrate.

The deflection of any point of the recording layer in the information zone from its nominal position, in a direction normal to plane P, shall not exceed 0,5 mm for rotational frequencies of the disk up to 25,0 Hz.

Copyright International Organization for Standardization
Provided by IHS under license with ISO
No reproduction or networking permitted without license from IHS Not for Resale

11.4.6 Axial acceleration

The maximum allowed axial error e_{max} (See annex C.) shall not exceed ±1,0 mm, measured using the Reference Servo for axial tracking of the recording layer. The rotational frequency of the disk shall be 25,0 Hz ± 0,25 Hz. The stationary part of the motor is assumed to be motionless (no external disturbances). The measurement shall be made using a servo with the transfer function

$$H_s(i\omega) = \frac{1}{c}\left(\frac{\omega_0}{i\omega}\right)^2 \frac{1+i\omega c/\omega_0}{1+i\omega/c\omega_0}$$

where $i = \sqrt{-1}$, $\omega = 2\pi f$, $\omega_0 = 2\pi f_0$ and $c = 3$

or any other servo with $|1+H|$ within 20 % of $|1+Hs|$ in the bandwidth of 25 Hz to 1,5 kHz. Thus, the disk shall not require an acceleration of more than 35 m/s^2 at the frequencies lower than 1,5 kHz from the servo motor of the Reference Servo.

11.4.7 Radial runout

The radial runout of the tracks in the recording layer in the Information zone is measured as seen by the optical head of the Reference Drive. (See clause 9.) Thus it includes the distance between the axis of rotation of the spindle and reference axis A, the tolerances on the dimensions between axis A and the location of the track, and effects of non-uniformities in the index of refraction.

The runout, defined as the difference between the maximum and minimum distance of the centre of any track from the axis of rotation, measured along a fixed radial line over one revolution of the disk, shall not exceed 90 mm at a rotational frequency of the disk of 25,0 Hz ± 0,25 Hz.

11.4.8 Radial acceleration

The maximum allowed radial error e_{max} (see annex C) shall not exceed ± 0,10 mm, measured using the Reference Servo for radial tracking of tracks. The rotational frequency of the disk shall be 25,0 Hz ± 0,25 Hz. The stationary part of the motor is assumed to be motionless (no external disturbances). The measurement shall be made using a servo with the transfer function

$$H_s(i\omega) = \frac{1}{c}\left(\frac{\omega_0}{i\omega}\right)^2 \frac{1+i\omega c/\omega_0}{1+i\omega/c\omega_0}$$

where $i = \sqrt{-1}$, $\omega = 2\pi f$, $\omega_0 = 2\pi f_0$ and $c = 3$

or any other servo with $|1+H|$ within 20 % of $|1+Hs|$ in the bandwidth of 25 Hz to 1,5kHz. Thus, the disk shall not require an acceleration of more than 10 m/s^2 for the frequencies lower than 1,5 kHz from the servo motor of the Reference Servo.

11.4.9 Tilt

The tilt is the angle which the normal to the entrance surface, averaged over an area of 1 mm diameter, makes with the normal to plane P. It shall not exceed 5 mrad in the Information zone.

Copyright International Organization for Standardization
Provided by IHS under license with ISO
No reproduction or networking permitted without license from IHS
Not for Resale

11.5 Optical characteristics

11.5.1 Index of refraction

The index of refraction of the substrate in the Information zone shall be within the range from 1,46 to 1,60.

11.5.2 Thickness of the substrate

The thickness of the substrate, from the entrance surface to the recording layer, in the Information zone shall be

$$0{,}509\frac{n^3}{n^2-1}\cdot\frac{n^2+0{,}265}{n^2+0{,}593}\ \text{mm}\ \tilde{n}\ 0{,}050\ \text{mm}$$

where n is the index of refraction.

11.5.3 Birefringence

The birefringence of double-pass shall not exceed 100 nm.

11.5.4 Reflectance

The double-pass optical transmission of the substrate and the reflectance of the recording layer are measured together as the reflectance R of the disk. The measurement excludes the reflection of the entrance surface.

The value of R at the standard wavelength specified in 9.2 shall lie within the range from 0,07 to 0,50 for all types of disks.

The nominal value of R shall be specified in byte 3 of the PEP control data (See annex F.).

The actual value R_m shall be measured with the focussed beam and wavelength of the Reference Drive (See clause 9.). It shall be measured in any unrecorded, ungrooved area.

At any point within the Information zone the value R_m shall be within ± 12 % of the value of R..

12 Interface between cartridge and drive

12.1 Clamping method

When the cartridge is inserted into the drive, the shutter of the case is opened and the drive spindle engages the disk. The disk is held against the spindle by an axial clamping force. The radial positioning of the disk is provided by the centring of the axle of the spindle in the centre hole. The turntable of the spindle shall support the disk in its clamping zone, determining the axial position of the disk.

12.2 Hub (See figure 13.)

The disk shall have a hub as a clamping feature having the centre hole of diameter D_5. The diameter of the hub shall be

$$D\ 6 = 55{,}0\ \text{mm} \pm 0{,}2\ \text{mm}$$

and shall protrude

$$L_{70} = 2{,}5\ \text{mm} \pm 0{,}1\ \text{mm}$$

from the disk surface The outer edge of the hub shall be rounded with a radius

Copyright International Organization for Standardization
Provided by IHS under license with ISO
No reproduction or networking permitted without license from IHS Not for Resale

R_{21} = 0,2 mm max.

The material of the hub shall be a magnetizable material and the hub has twelve holes of diameter

D_7 = 4,0 mm ± 0,1 mm.

The holes shall be arranged along the circle of radius

D_8 = 43,0 mm ± 0,1 mm.

The depth of the holes shall be

L_{71} = 2,0 mm min.

The leading edge of the centre hole shall have the chamfer with an angle of

θ_3= 15° ± 0,2°

to the direction of the axis A, and the depth of the leading edge of the centre hole shall be

L_{72} = 1,5 mm ± 0,1 mm.

12.3 Clamping force

The clamping force shall not exceed 22 N and the clamping device shall meet the requirements in annex J.

12.4 Capture cylinder (See figure 14.)

The capture cylinder is defined as the volume in which the spindle can expect the centre of the hole in the hub to be, just prior to capture, and with the cartridge constrained as in 10.4.4. The centre of the the hole is defined as the point on axis A at a distance L_{72} from the plane defined by hub surface P (See 11.3.1 and figure 13.).

The size of the cylinder defines the permissible play of the disk disk inside its cavity in the case. The cylinder is referred to perfectly sized alignment and location pins in the drive; it includes the tolerances of those dimensions of the case and the disk which are between the two pins mentioned and the centre of the hub.

The bottom of the cylinder is parallel to the plane Z, and shall be located a distance

L_{73} = 0,5 mm min.

above plane Z. The top of the cylinder shall be

L_{74} = 5,9 mm max.

above the plane Z. The radius of the cylinder shall be

D_9 = 4,8 mm max.

12.5 Disk position in operating condition (See figure 14.)

When the disk is in operating condition within the drive, the position of plane P of the disk shall be

L_{75} = 5,9 mm ± 0,3 mm

above the reference surfaces S_1,S_2,S_3 and S_4, and the axis of rotation shall be within a circle with a radius

D_{10} = 0,5 mm max.

The torque to be exerted on the disk in operating condition in order to maintain a rotational frequency of 25,0 Hz shall not exceed 0,1 N·m.

Copyright International Organization for Standardization
Provided by IHS under license with ISO
No reproduction or networking permitted without license from IHS
Not for Resale

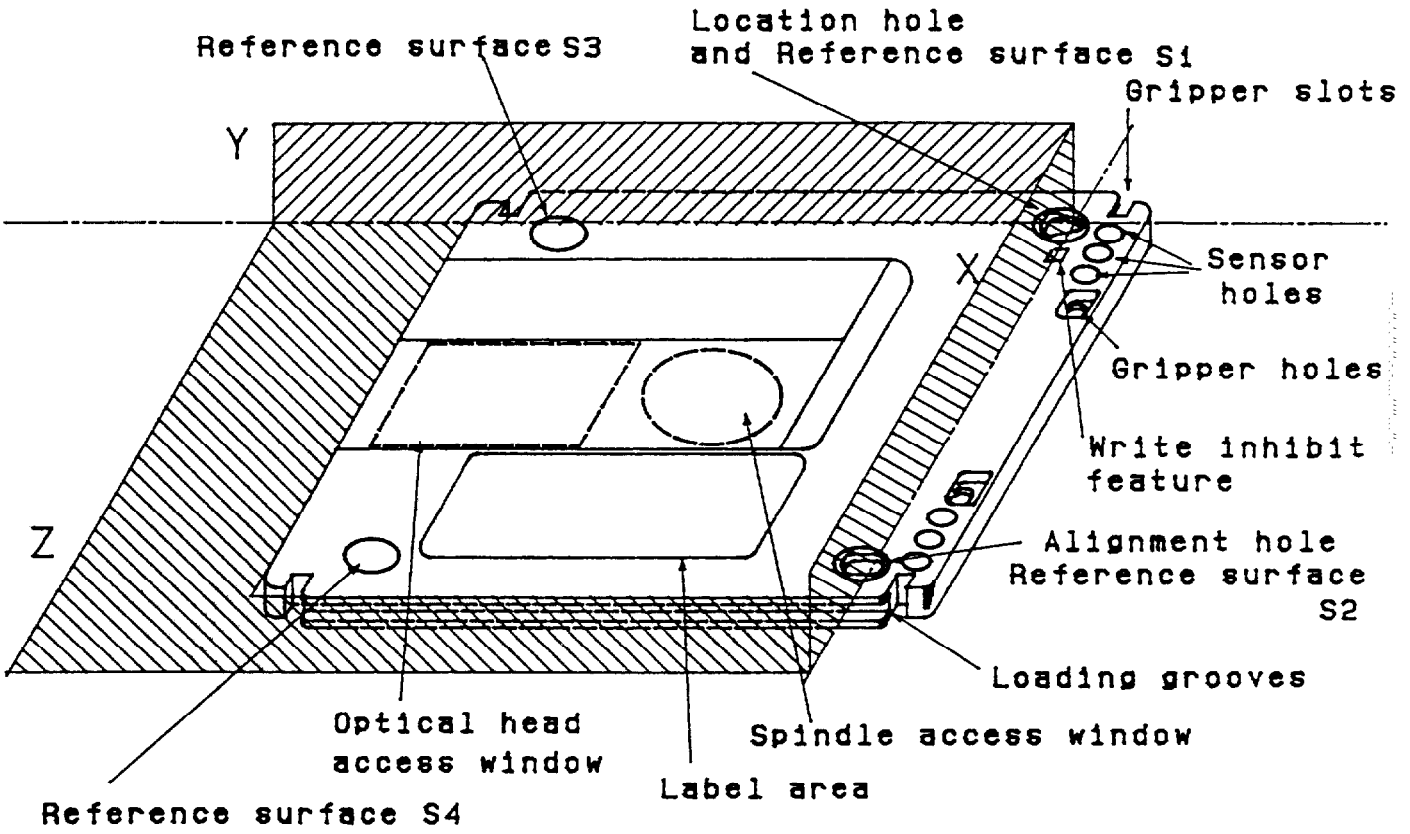

Figure 2 - General view of the case showing position of the cartridge relative to the reference planes

Copyright International Organization for Standardization
Provided by IHS under license with ISO
No reproduction or networking permitted without license from IHS
Not for Resale

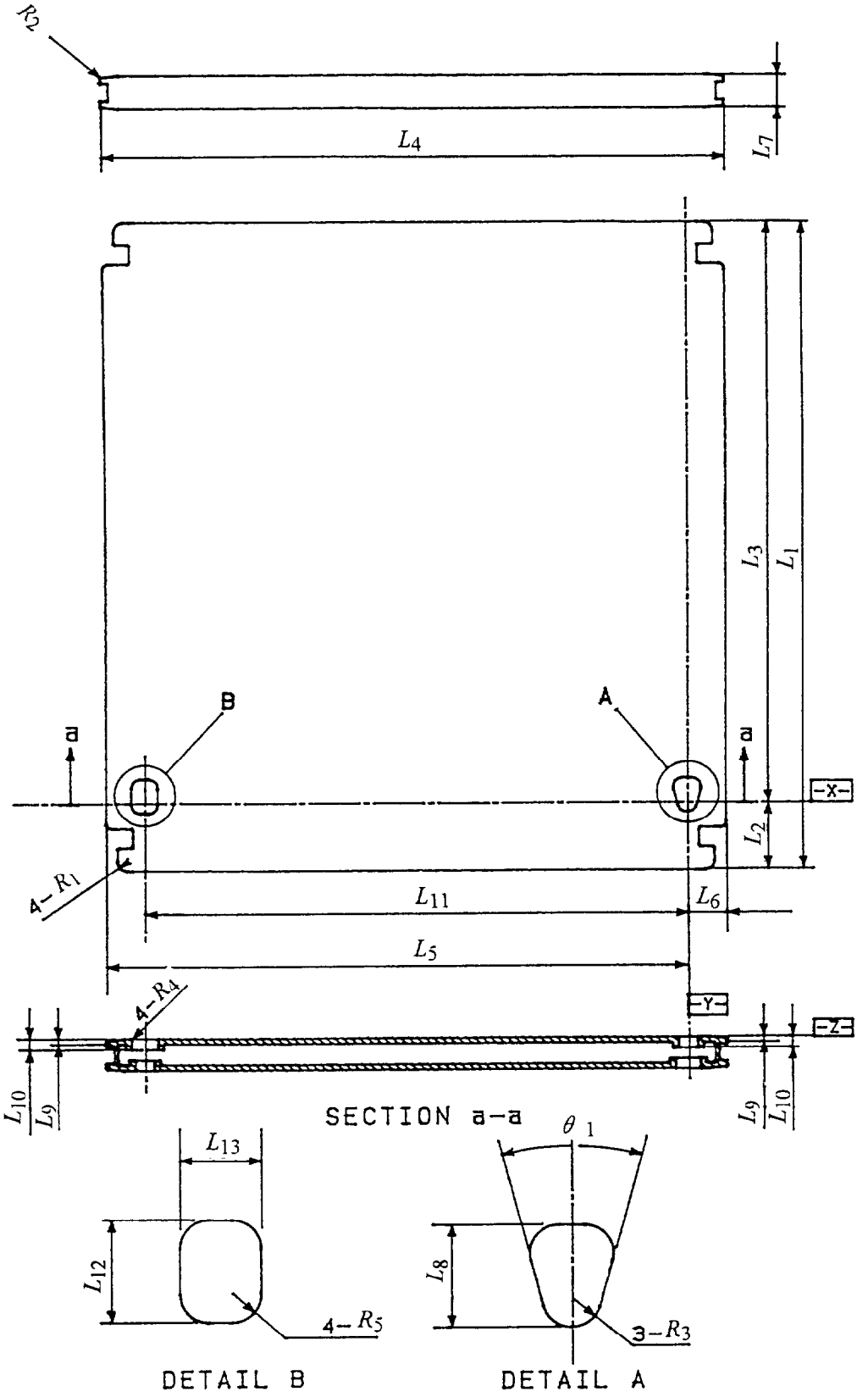

Figure 3 - Overall dimensions, viewed on Side A

Copyright International Organization for Standardization
Provided by IHS under license with ISO
No reproduction or networking permitted without license from IHS
Not for Resale

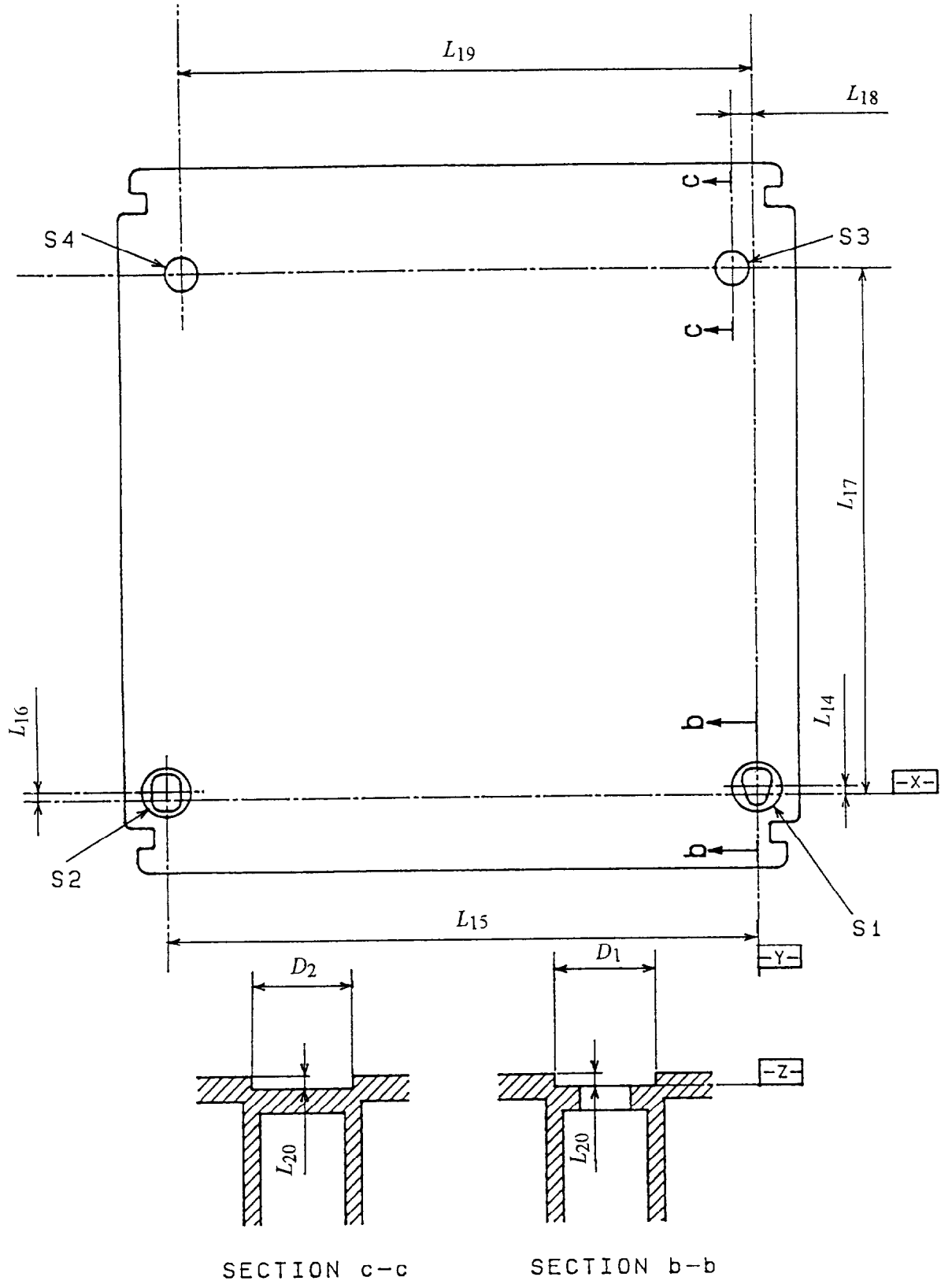

Figure 4 - Reference surfaces

Copyright International Organization for Standardization
Provided by IHS under license with ISO
No reproduction or networking permitted without license from IHS
Not for Resale

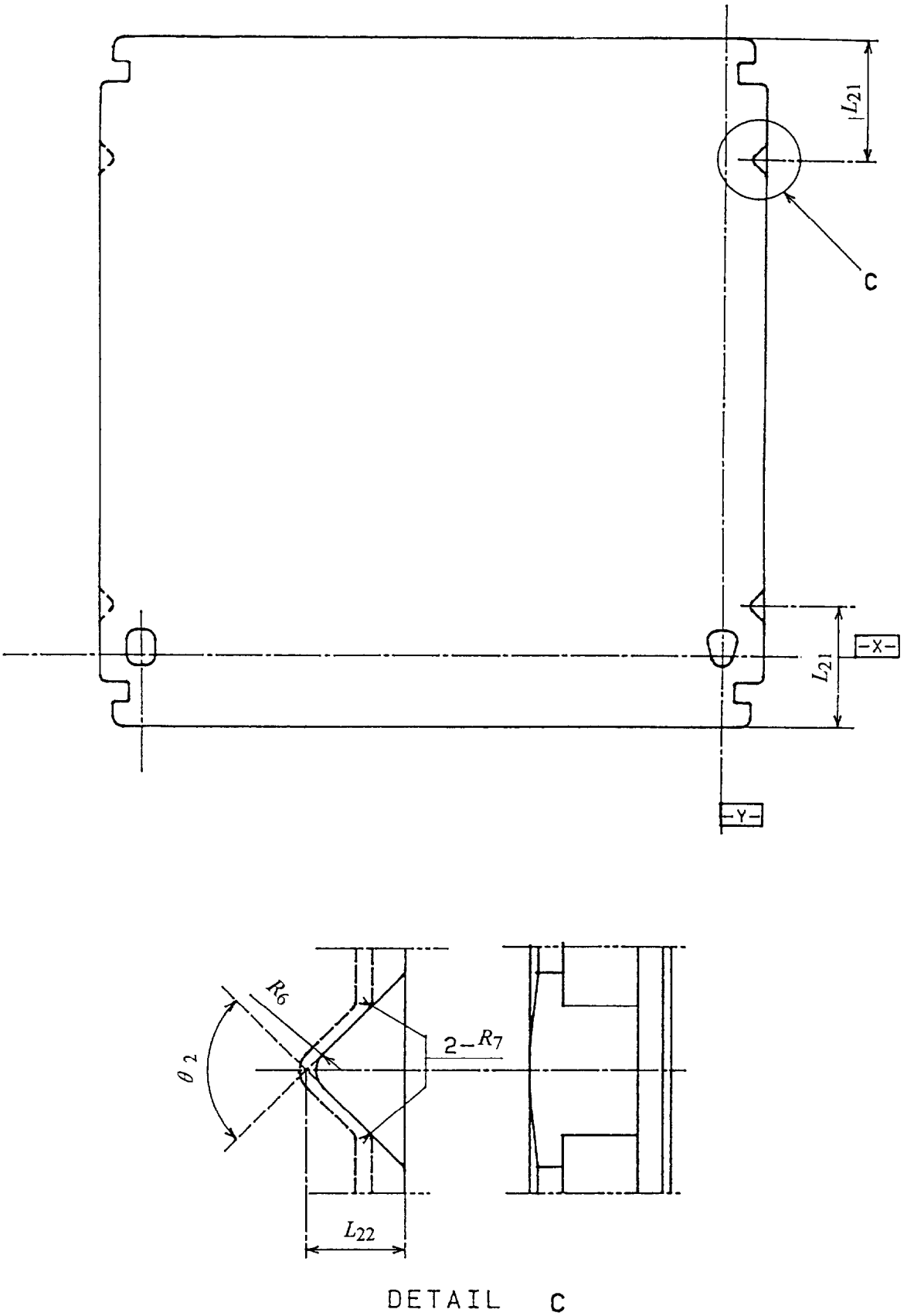

Figure 5 - Detents

Copyright International Organization for Standardization
Provided by IHS under license with ISO
No reproduction or networking permitted without license from IHS
Not for Resale

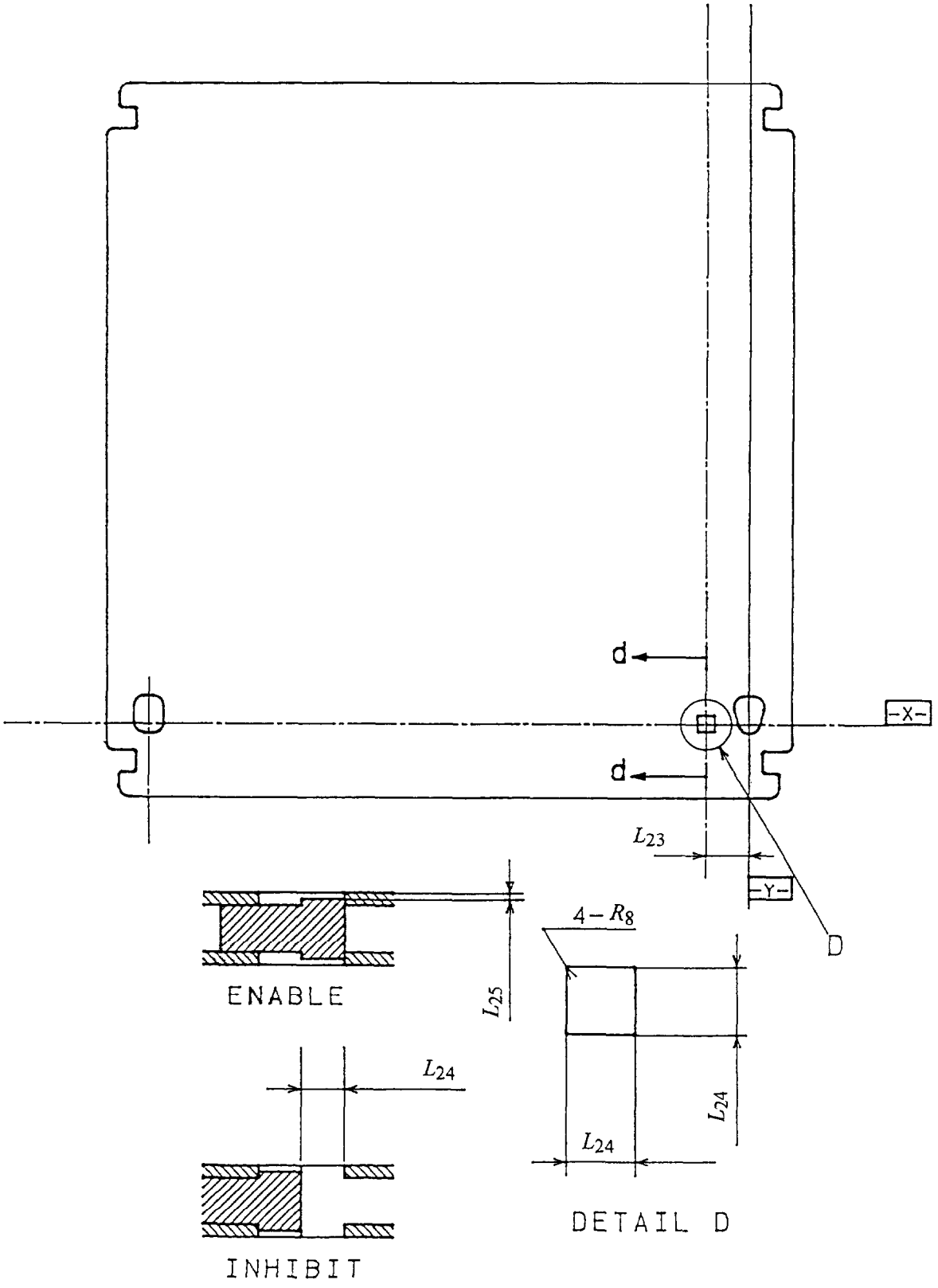

Figure 6 - Write-inhibit feature

Copyright International Organization for Standardization
Provided by IHS under license with ISO
No reproduction or networking permitted without license from IHS
Not for Resale

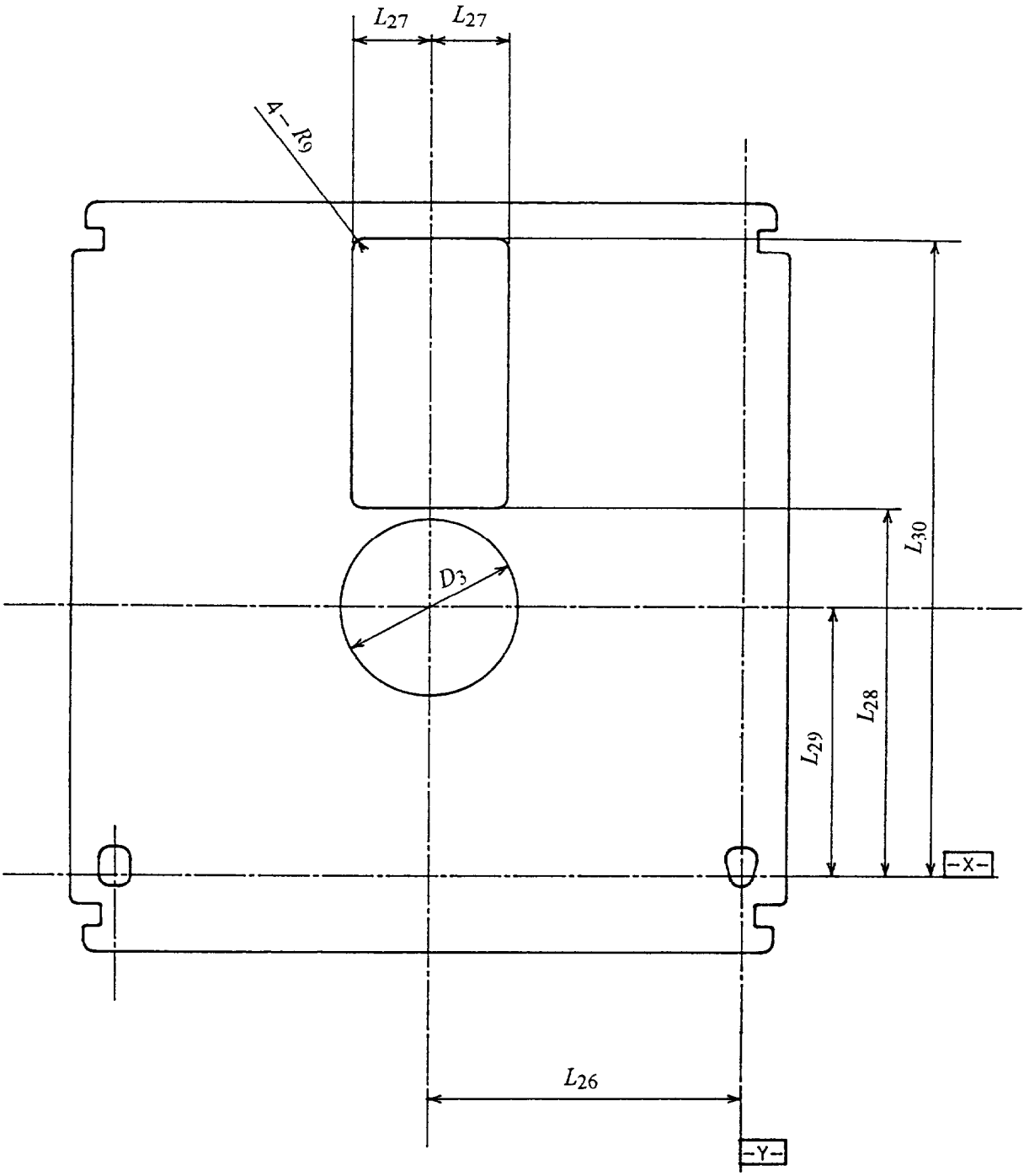

Figure 7 - Head and spindle access windows

Copyright International Organization for Standardization
Provided by IHS under license with ISO
No reproduction or networking permitted without license from IHS
Not for Resale

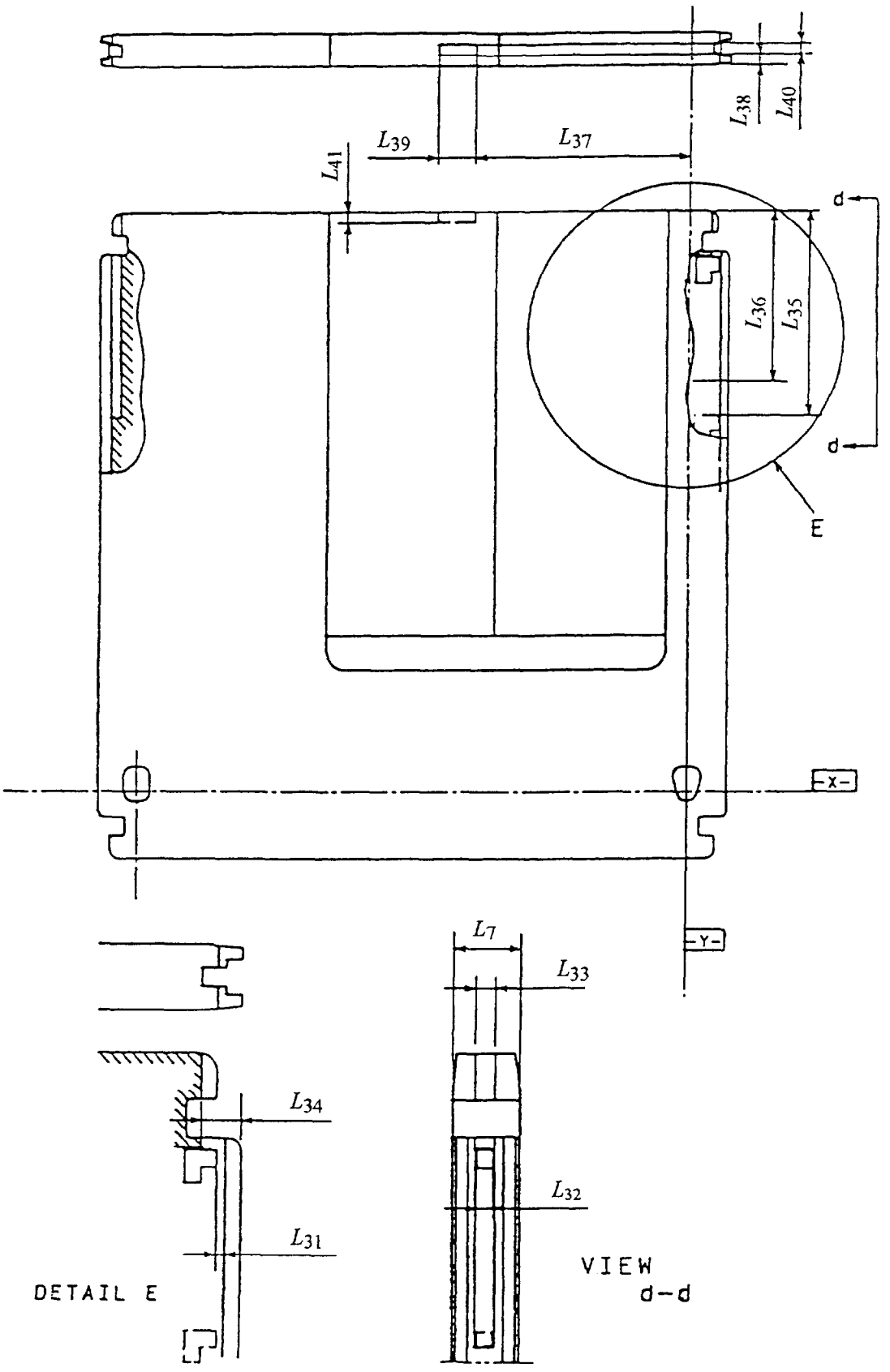

Figure 8 - Shutter and shutter opener feature

Copyright International Organization for Standardization
Provided by IHS under license with ISO
No reproduction or networking permitted without license from IHS
Not for Resale

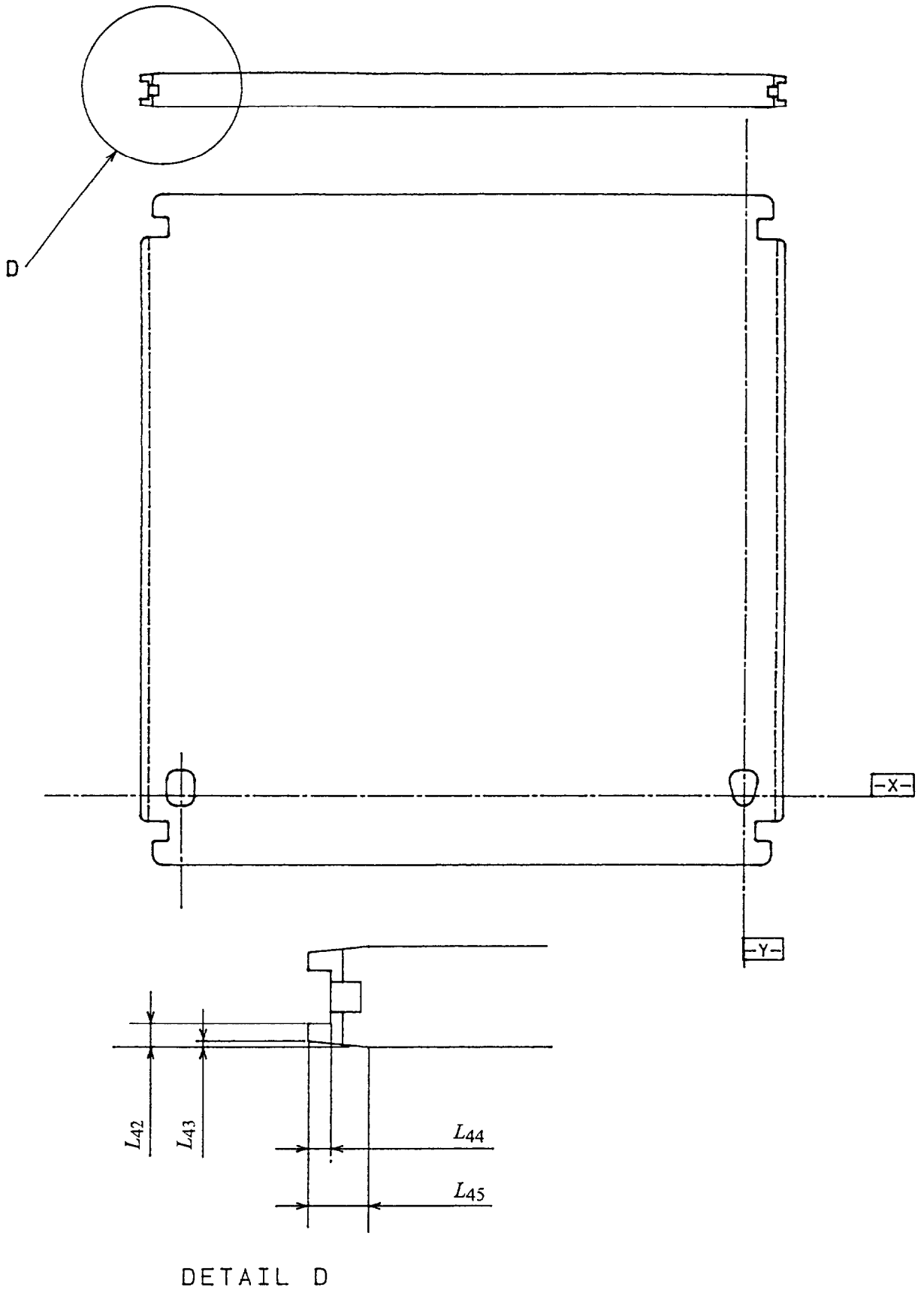

Figure 9 - Loading grooves and mis-insert protection feature

Copyright International Organization for Standardization
Provided by IHS under license with ISO
No reproduction or networking permitted without license from IHS
Not for Resale

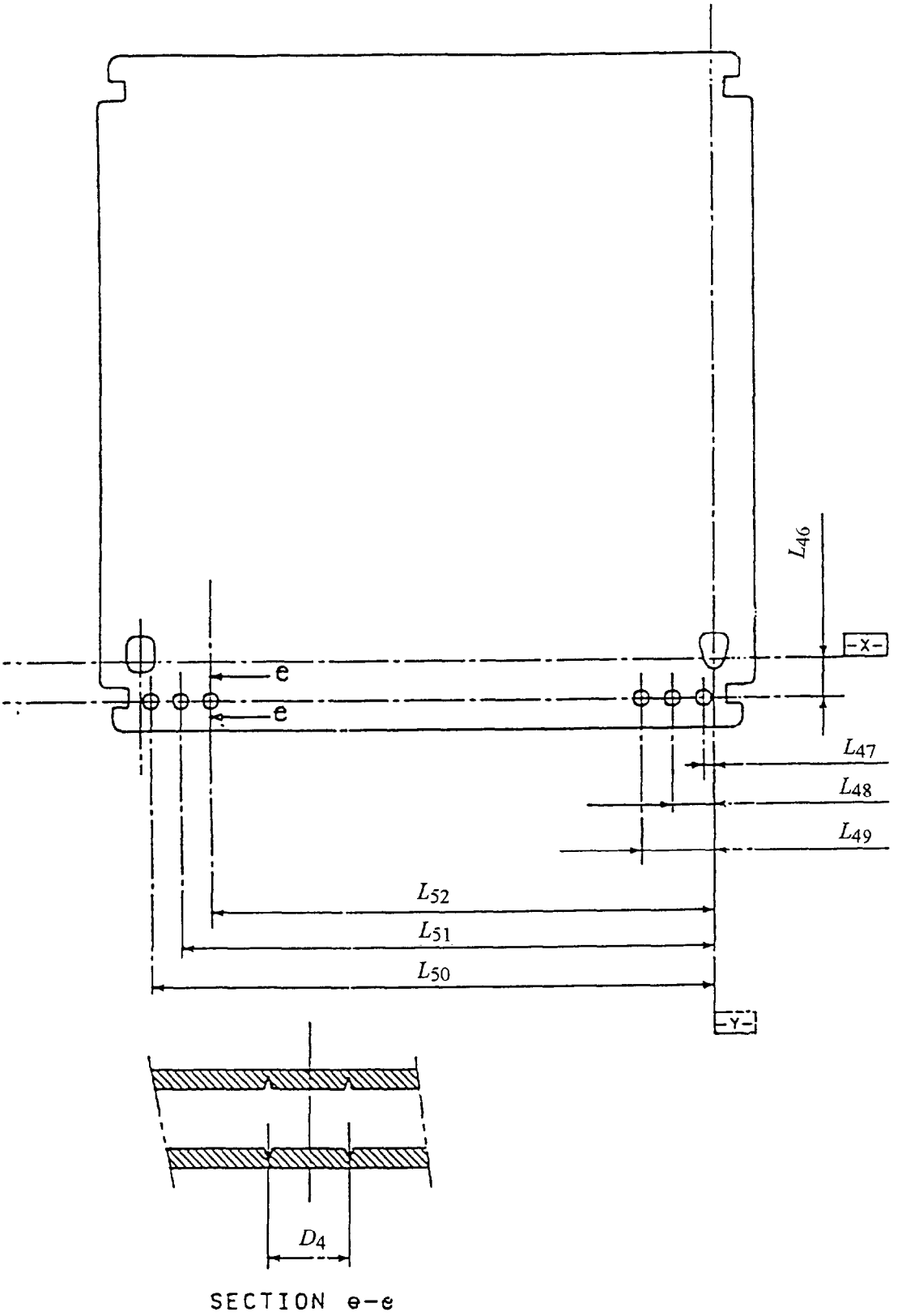

Figure 10 - Sensor holes

Copyright International Organization for Standardization
Provided by IHS under license with ISO
No reproduction or networking permitted without license from IHS
Not for Resale

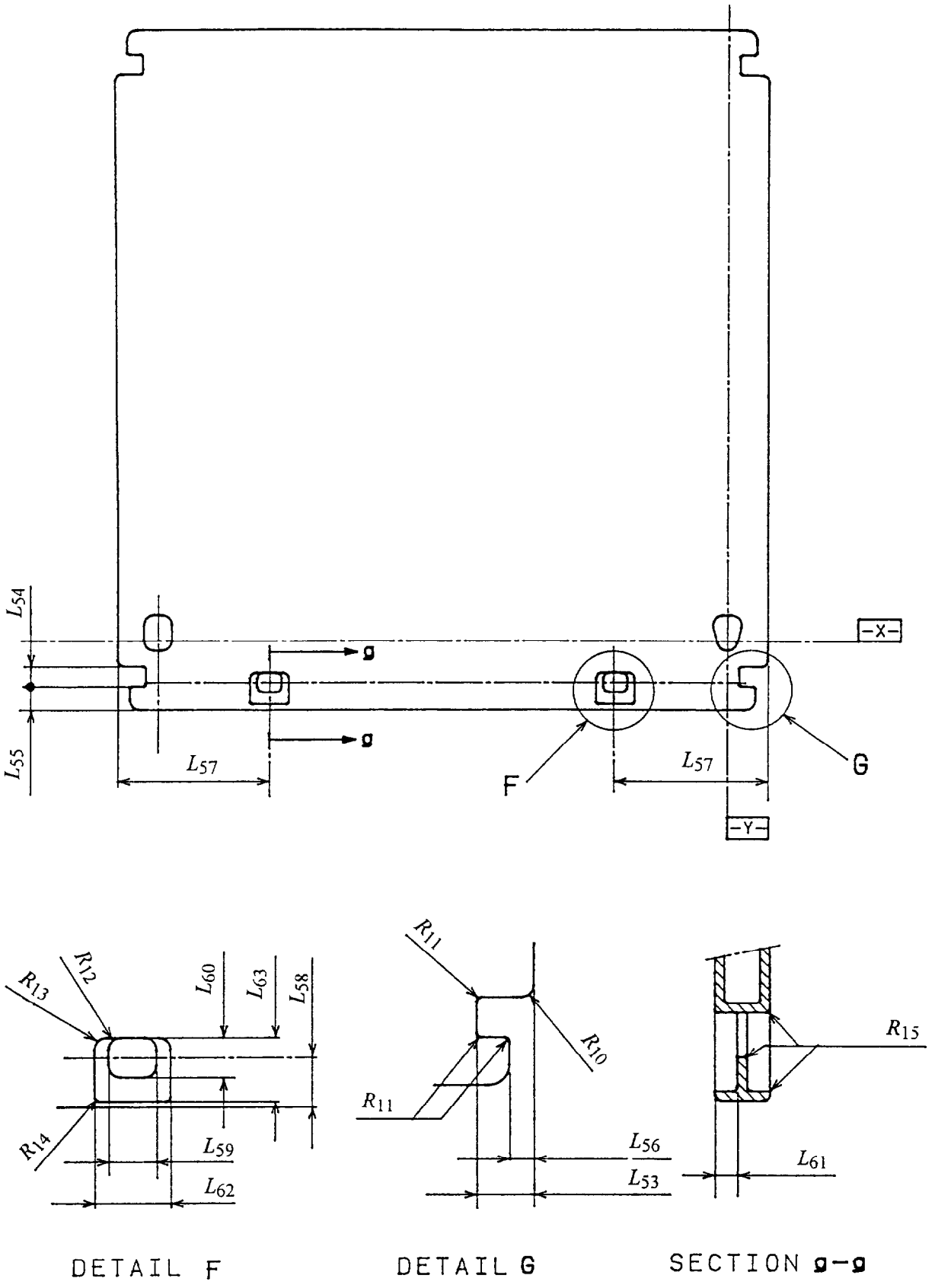

Figure 11 - Gripper features

Copyright International Organization for Standardization
Provided by IHS under license with ISO
No reproduction or networking permitted without license from IHS
Not for Resale

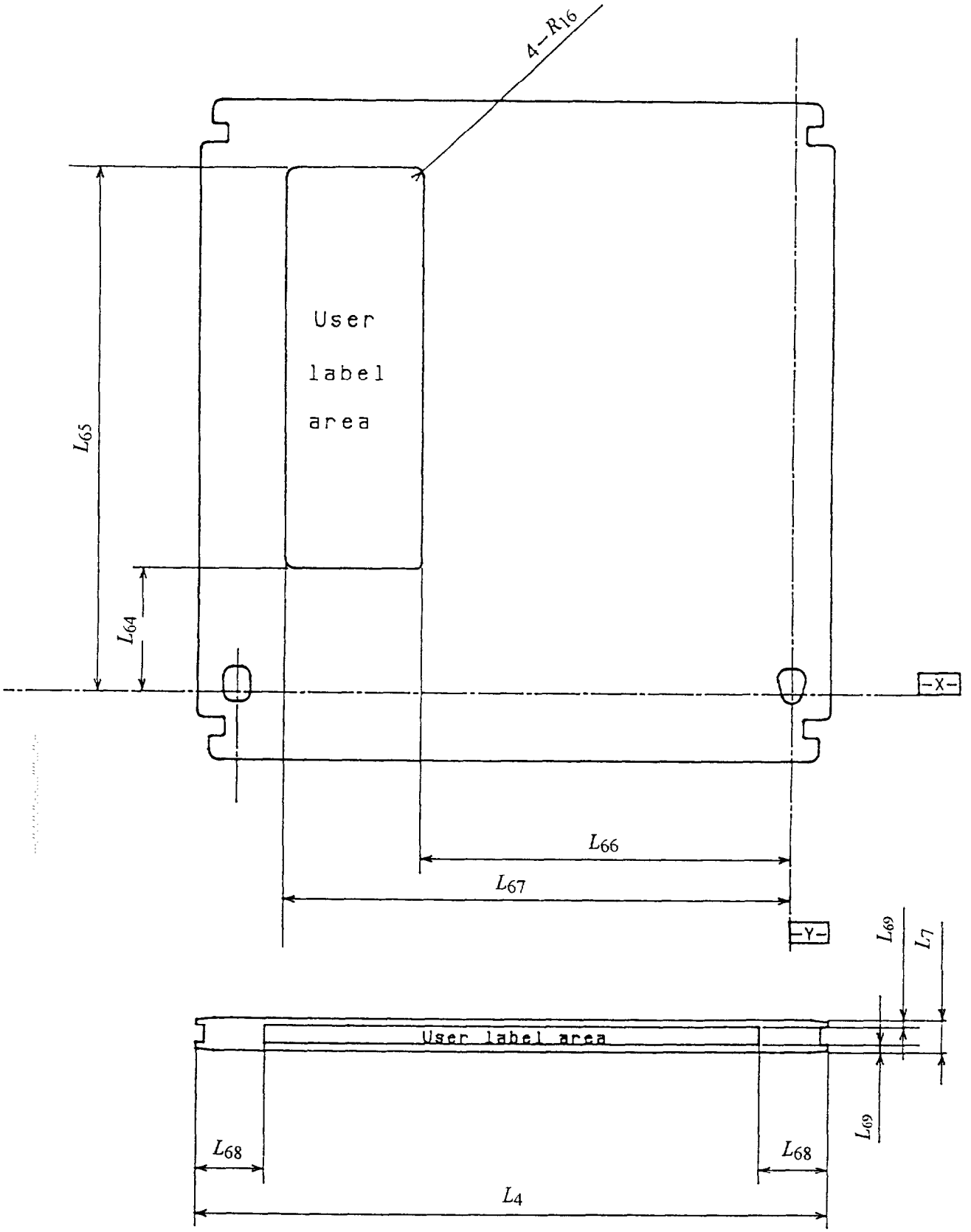

Figure 12 - Label area

Copyright International Organization for Standardization
Provided by IHS under license with ISO
No reproduction or networking permitted without license from IHS
Not for Resale

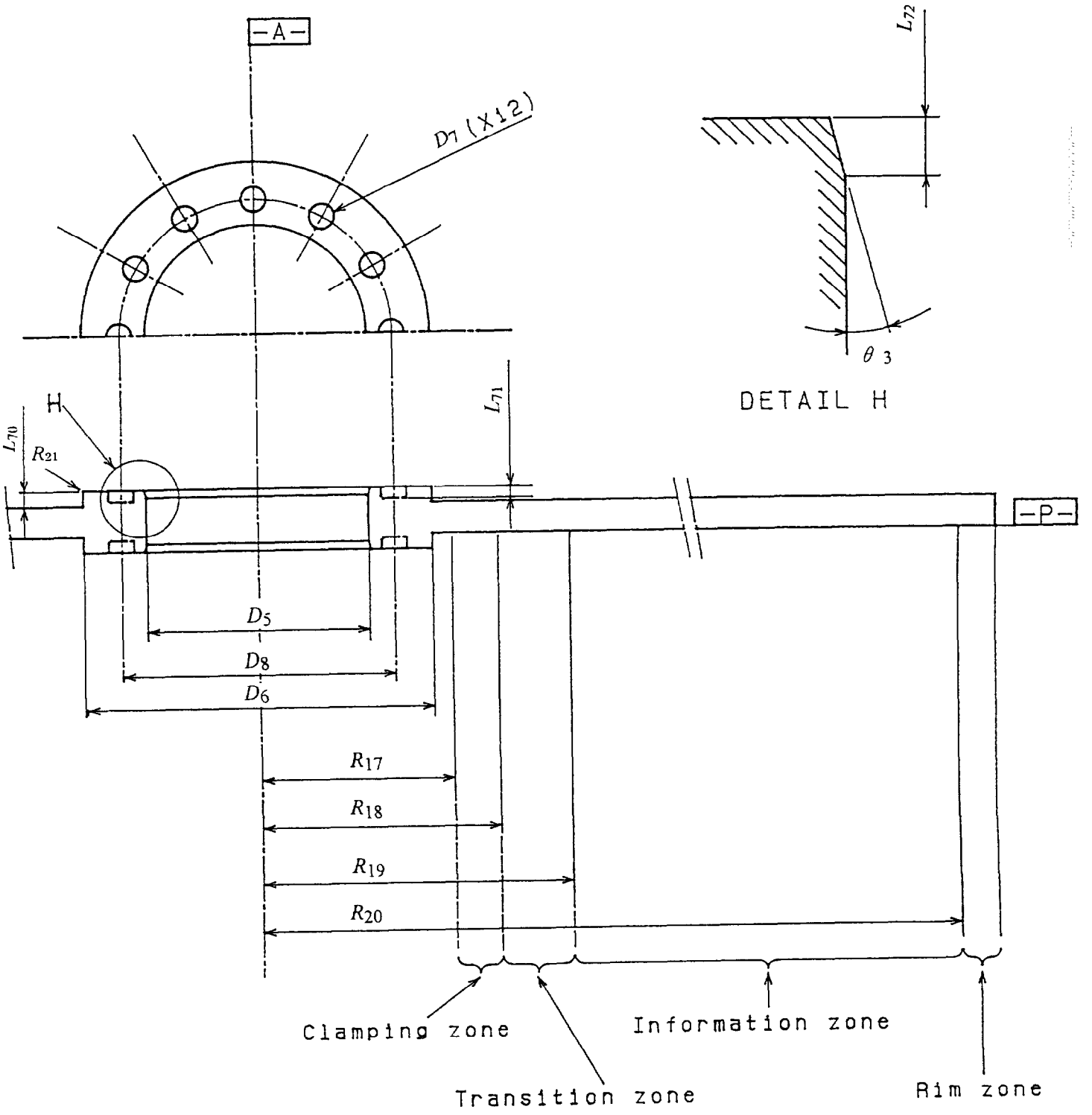

Figure 13 - Dimensions of the disk

Copyright International Organization for Standardization
Provided by IHS under license with ISO
No reproduction or networking permitted without license from IHS
Not for Resale

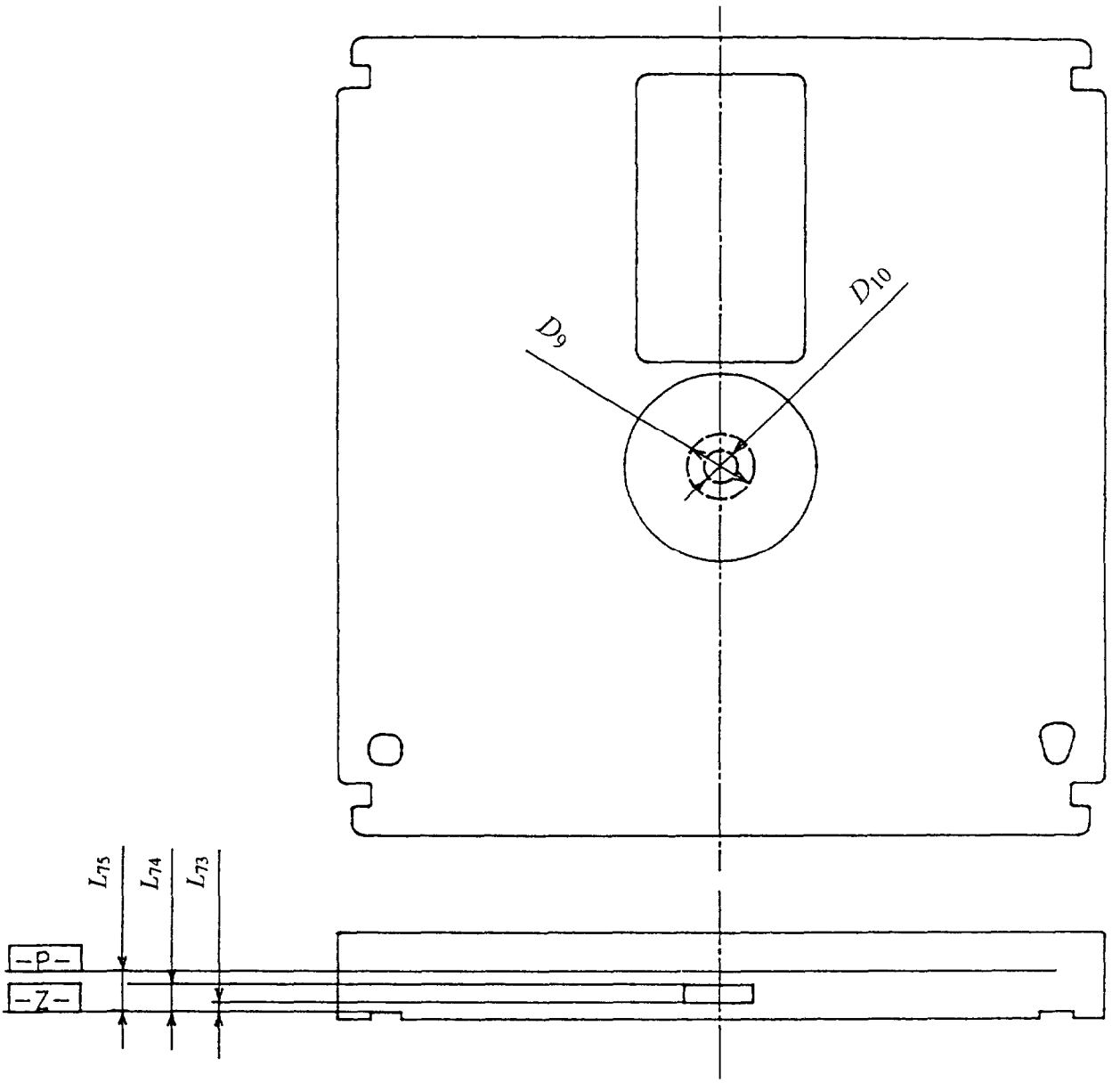

Figure 14 - Capture cylinder and disk position

Copyright International Organization for Standardization
Provided by IHS under license with ISO
No reproduction or networking permitted without license from IHS

Not for Resale

Section 3 : Format of information

13 Track geometry

13.1 Track shape

The Information zone shall contain tracks intended for the Continuous Composite Servo tracking method (CCS).

A track consists of a groove-land-groove combination, where each groove is shared with a neighbouring track. A groove is a trench-like feature, the bottom of which is located nearer to the entrance surface than the land. The centre of the track, i.e. where the recording is done, is the centre of the land. The grooves shall be continuous, except for Mirror fields. The shape of the groove is determined by the requirements in clause 21.

Each track shall form a 360° turn of a continuous spiral.

13.2 Direction of rotation

The disk shall rotate accordingly as indicated by the sensor hole that identifies the side A or the side B of the case. The tracks of each side shall reside oppositely from the indicated side of the case. For the side A, the disk shall rotate counter-clockwise as viewed from the corresponding incident beam. The tracks of side A shall then spiral outward. For the side B, the disk shall rotate clockwise as viewed from the corresponding incident beam. The tracks of side B shall then spiral outward.

13.3 Track pitch

The track pitch is the distance between adjacent track centre-lines, measured in a radial direction. It shall be 1,40 mm ± 0,07 mm. The width of a band of 53572 tracks shall be 75,00 mm ± 0,40 mm.

13.4 Track number

Each track shall be identified by a track number. Track 0 shall be the first track of the Data zone. It shall be located at a radius of 66,00 mm ± 0,40 mm.

The track number of tracks located at radii larger than that of track 0 shall be increased by 1 for each track.

The track numbers of tracks located at radii smaller than that of track 0 shall be negative, and decreased by 1 for each track. Their value is given in the Address field in TWO's complement, thus track -1 is indicated by (3FFFF).

14 Track format

14.1 Track layout

On each track there shall be 70 to 150 sectors as a function of the track number of the track in such a way that:

tracks of negative track number have 70 sectors,
tracks of track number 0 to 284 have 70 sectors,
tracks of track number 285 to 952 have 71 sectors,

consecutively, the number of sectors be increased by 1 for the tracks in unit of 668 tracks,

tracks of track number 52389 to 53056 have 149 sectors, and
tracks of track number larger than 53057 have 150 sectors.

Copyright International Organization for Standardization
Provided by IHS under license with ISO
No reproduction or networking permitted without license from IHS Not for Resale

Each sector shall comprise 1360 bytes. A byte is represented on the disk by 12 Channel bits.

The sectors shall be equally spaced over a track in such a way that at track 0 the first Channel bit of a sector has an angular distance to the first Channel bit of the next sector of 360°/70 ± 3 Channel bits.

14.2 Radial alignment

The Headers of the sectors shall be radially aligned in such a way that the angular distance between the first Channel bit of sectors in adjacent tracks shall be less than ± 1 Channel bit.

14.3 Sector number

The sectors on a track shall be numbered consecutively from 0 to the last sector number of the track, i.e. 69 at track 0. All sectors with the same sector number shall be radially aligned within the tracks having the same number of sectors.

15 Sector format

15.1 Sector layout

A sector shall comprise a Header field and a Recording field in which 1024 user data bytes can be recorded. The Header of each sector shall be embossed. The Recording field can be empty or user-written except the control track SFP sectors. The Recording field of the control track SFP sectors shall be embossed. The length of the sector shall be 1360 bytes nominally. Tolerances allowed by 14.1 are taken up by the Buffer, i.e. the last field of the sector. The length of the Header field is 67 bytes, the length of the Recording field is 1293 bytes.
The layout of a sector is shown in figure 15.

TRACK No.	SECTOR No.	FLD No.	CRC
2/8	18/8	12/8	2

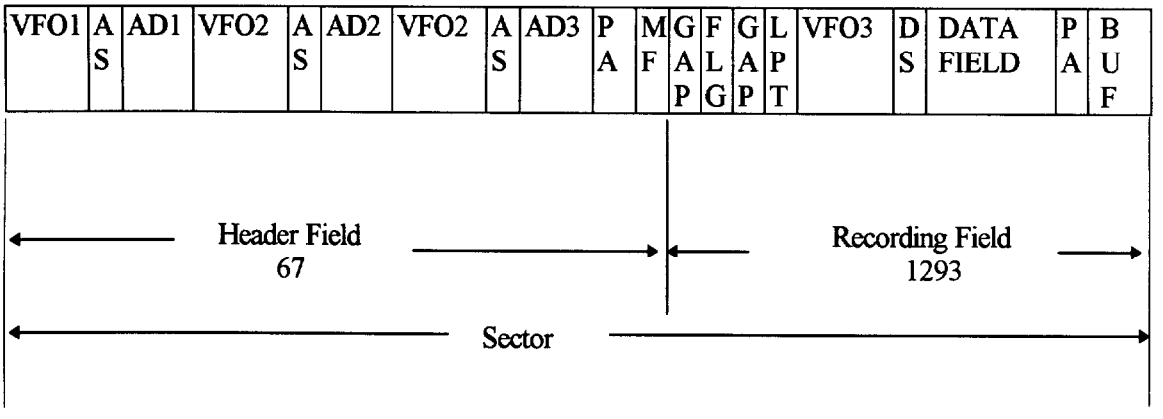

Figure 15 - Sector format. The numbers indicate the length of a field in bytes

15.2 VFO fields

There shall be four fields designated VFO_1, VFO_2 and VFO_3 to give the Voltage-Frequency-Oscillator of the phase-locked loop of the read channel Channel bit synchronization. The information in VFO_1 shall be definite and have a length of 240

Copyright International Organization for Standardization
Provided by IHS under license with ISO
No reproduction or networking permitted without license from IHS Not for Resale

Channel bits. The start of VFO_2 depends on the contents of the preceding ID field because of the closure required for the (1,7) recording code. Therefore, VFO_2 shall be the appropriate one of three patterns differing in the first four Channel bit. VFO_2 shall have a length of 144 Channel bits. The information in VFO_3 shall be definite and have a length of 192 Channel bits.

The continuous Channel bit pattern for the VFO fields shall be:

VFO_1, 240 Channel bits:	100100100100100.....100100100
VFO_2, 144 Channel bits:	100100100.....100100100
or :	000100100.....100100100
or :	001000100.....100100100
VFO_3, 192 Channel bits:	100100100100.....100100100

15.3 Address Sync (AS)

The Address Sync consists of an embossed pattern that does not occur in data, and is a run-length violation of the (1,7) recording code. The field is intended to give the drive byte synchronization for the following Address field.

The field shall have a length of 12 Channel bits with the following pattern:

010000000010.

15.4 Address fields

The three Address fields shall each contain the address of the sector, i.e. the track number and the sector number of the sector, and CRC bytes. Each field shall consist of six bytes with the following embossed contents:

1st byte, bits 7 and 6 number of field	
	00 shall indicate field AD1
	01 shall indicate field AD2
	10 shall indicate field AD3
bits 5 and 4	ZERO
bits 3 to 0	bits 15 to 12 of track number
2nd byte,	bits 11 to 4 of track number
3rd byte, bits 7 to 4	bits 3 to 0 of track number
bits 3 to 0	bits 11 to 8 of sector number
4th byte,	bits 7 to 0 of sector number
5th and 6th byte	CRC field containing the CRC bits computed over the first four bytes according to annex D.

15.5 Postambles (PA)

The Postamble field shall be a field of 12 Channel bits. There is a Postamble after AD3 and another one after the Data field. It allows closure of the last byte of the preceding CRC or Data field as required by the (1,7) recording code (See clause 16.) and also allows closure of the PWM modulation to non-mark manner. The Postamble is necessary to be able to start the following Mirror field or Buffer field in a predictable manner.

Copyright International Organization for Standardization
Provided by IHS under license with ISO
No reproduction or networking permitted without license from IHS Not for Resale

15.6 Mirror Field (MF)

The Mirror Field shall have a length of 12 Channel bits and contains neither grooves nor embossed data. It is intended to enable the drive to correct for offsets in the radial tracking.

15.7 Gap

The Gap shall not contain any of user-written data. It is intended to splice the preceding Header field and the succeeding Flag field or the preceding Flag field and the succeeding Laser Power Test field with some time for the drive to change its operation from reading to writing and vice versa. The Gap after the Mirror field shall have a nominal length of 12 Channel bits and the Gap after the Flag field shall have a nominal length of 24 Channel bits.

The lengths of each Gap have a tolerance of ± 3 Channel bits, i.e. the Flag field can start between 9 and 15 Channel bits after the Mirror field and the Laser Power Test field can start between 21 and 27 Channel bits after the Flag field. Moreover, they need not start exactly on a Channel bit position as extrapolated from the Header or the Flag. The tolerance is subtracted from the length of the Buffer field, e.g. a Gap length of 11,3 Channel bits between the Mirror field and the Flag field and another Gap length of 25,3 Channel bits between the Flag field and the Laser Power Test field results in a reduction of the Buffer length by 2,6 Channel bits.

15.8 Flag (FLG)

The Flag field shall be a field of 60 Channel bits. This field is intended to prevent inadvertent write operations over previously written data. When the sector does not contain user data, this field shall be unrecorded. When the sector does contain user data, this field shall be recorded with the following pattern:

100100100....100100100.

15.9 Laser Power Test field (LPT)

The Laser Power Test field is intended to allow the drive to test the laser power level. Its contents are not specified and shall be ignored on interchange. This field shall have a length of 24 Channel bits.

15.10 Data Sync (DS)

The Data Sync field is intended to allow the drive to obtain byte synchronization for the following Data field. It shall have a length of 36 Channel bits and be recorded with the following Channel bits pattern:

100010 100100 010100 100001 001010 100000.

15.11 Data field

The Data field is intended for recording user data. It shall have a length of 1249 bytes and shall comprise the following:

1024	bytes of user data
2	bytes of address data
4	bytes of CRC parity
160	bytes of ECC parity and
59	bytes for resynchronization (Resync).

The disposition of these bytes in the Data field with their ten-way interleave and the contents of the last three categories is specified in annex E.

Copyright International Organization for Standardization
Provided by IHS under license with ISO
No reproduction or networking permitted without license from IHS Not for Resale

15.11.1 User data bytes

The User data bytes are at the disposal of the user for recording information.

15.11.2 Address data bytes

The Address data bytes are at the disposal of the third and fourth bytes of the Address field of the sector. These bytes can be used as a confirmative information by a drive. In case of SFP, (FFFF) shall be recorded.

15.11.3 CRC and ECC bytes

The Cyclic Redundancy Check bytes and Error Correction Code bytes are used by the error detection and correction system to rectify erroneous data. The ECC is a Reed-Solomon code of degree 16. The bytes shall be as specified in annex E.

15.11.4 Resync bytes

The Resync bytes enable a drive to regain byte synchronization after a large defect in the Data field. Their content and location in the Data field shall be as specified in annex E.

15.12 Buffer field

The Buffer field shall have a length of 168 Channel bits ± 36 Channel bits and shall not contain any data. The tolerance is needed for three reasons. .Firstly, the tolerance on the header-to-header distance as specified in 14.1. Secondly, the tolerance on the Gap field as specified in 15.7. Thirdly, the actual length of the written data, as determined by the runout of the track and the speed variations of the disk during writing of the data.

16 Recording code

The 8-bit bytes in the three Address fields and in the Data field, except for the Resync bytes, shall be converted to Channel bits on the disk according to table 1. All other fields in a sector have already been defined in terms of Channel bits. Each ONE Channel bit shall be recorded as an inversion between absence and presence of a mark produced by a write pulse of the appropriate power and width.

The recording code used to record all data in the Information zone on the disk shall be the run-length limited code known as RLL (1,7).

Copyright International Organization for Standardization
Provided by IHS under license with ISO
No reproduction or networking permitted without license from IHS Not for Resale

Table 1 - Conversion of input bits to Channel bits

Input bits	Channel bits
01	x00
10	010
11	x01
0001	x00001
0010	x00000
0011	010001
0000	010000

x indicates inverted value to the value of preceding Channel bit

The coding shall start at the first bit of the first byte of the field to be converted. After a Resync field the RLL(1,7) coding shall start again with the first bit of the next byte of input data.

17 Format of the information zone

17.1 General description of the Information zone

The Information zone defined in 11.3.4 contains all information on the disk relevant for data interchange. The information comprises embossed tracking provisions, embossed headers, embossed data and, possibly, user-written data. In this clause, the term "data" is reserved for the content of the data field of a sector, which, in general, is transferred to the host. This section defines the layout of the information; the characteristics of signals obtained from this information are specified in section 4 and 6.

17.2 Division of the Information zone

The Information zone is divided in three parts: a lead-in zone, a data zone and a lead-out zone. The data zone is intended for writing user data. The lead-in and lead-out zones contain control information for the drive and zones for performing tests by the manufacturer or user.

Copyright International Organization for Standardization
Provided by IHS under license with ISO
No reproduction or networking permitted without license from IHS Not for Resale

Table 2 - Layout of the Information zone

	track number		radius(mm)	
	from	to	from	to
Lead-in zone				
Mirror zone	--	--	64,000	64,500
PEP Control zone			64,500	65,500
Acquire zone				
Lead-in tracks	-357	-340	65,500	65,526
Focus tracks	-339	-335	65,526	65,532
Inner test zone				
for manufacturer	-334	-180	65,532	65,750
for user	-179	-22	65,750	65,970
Inner SFP Control zone	-21	-1	65,970	66,000
Data zone	0	53 571	66,000	141,000
Lead-out zone				
Outer SFP Control zone	53 572	53 592	141,000	141,030
Outer test zone				
for user	53 593	53 750	141,030	141,250
for manufacturer	53 751	53 905	141,250	141,468
Buffer zone	53 906	54 285	141,468	142,000

The radii of a zone in the table are the nominal values of the radius of the centre of the first track and of the radius of the centre of the last track of the zone.

The division of the Information zone shall be as given in table 2. The tolerance on the inner and outer radius of the Information zone is specified in 11.3.4; the tolerance on the inner radius of the data zone is specified in 13.4; the tolerance on other radii is determined by the tolerance on the track pitch as specified in 13.3.

17.2.1 Mirror zone

The Mirror zone is intended to enable a drive to lock its axial tracking servo. It shall have a flat recording layer without grooves nor embossed information.

17.2.2 PEP Control zone

The PEP Control zone shall not contain any servo information. All information in it shall be embossed in phase-encoded modulation. The marks in all tracks of the PEP Control zone shall be radially aligned, so as to allow information recovery from this zone without radial tracking being established by the drive.

The PEP Control zone is intended to enable a future drive to distinguish a disk in conformance with this International Standard from a future standardized disk.

Recording method, track format, sector format and data contents of the PEP Control zone are specified in annex F.

Signals from PEP control zone are described in clause 24.

Copyright International Organization for Standardization
Provided by IHS under license with ISO
No reproduction or networking permitted without license from IHS Not for Resale

17.2.3 Acquire zone

The Acquire zone consists of two parts, each containing embossed grooves and Header fields. The first part shall be a band of Lead-in tracks with no data in the Recording fields of the sectors.

The second part shall be a band of Focus tracks with a repeated Channel bit pattern 100100... embossed in the VFO_3, SYNC and Data fields of the Recording field of each sector. These tracks are intended to enable a drive to remove focus offsets by maximizing the read signal from the Channel bit pattern.

17.2.4 Test zones

There shall be an inner Test zone and an outer Test zone. The Test zones are areas with embossed grooves and Header fields, and Recording fields without embossed data.

The Test zone for the user is intended for tests to enable a drive to set its write power. The tracks used for testing should be chosen from the zone in a random way, so as to ensure a gradual degradation of the entire zone due to use. Then each track in this zone will remain representative for the characteristics of tracks in the Data zone of the disk.

The Test zone for the manufacturer is intended for quality tests by the media manufacturer. The Test zone for users shall not be used for such tests, as they can cause serious degradation of the zone.

17.2.5 SFP Control zones

There shall be an inner SFP Control zone and an outer SFP Control zone. Each SFP Control zone shall contain 21 tracks with embossed grooves and sectors formatted according to clause 13. The Data fields of all sectors in the two SFP Control zones shall be identical, and contain embossed Control data for the drive. Part of the information is required for setting the Reference Drive used for testing conformance to this International Standard. Another part of the information is intended for user drives to optimize their performance. The Control data in a Data field is specified in annex G.

17.2.6 Data zone

The Data zone shall contain embossed grooves and Header fields. The Recording fields shall be user-written data, in the format of clause 15. The layout of the Data zone is specified in clause 18.

17.2.7 Buffer zone

The Buffer zone shall contain embossed grooves and Header fields.

18 Format of the data zone

The Data zone shall contain four Defect Management Areas (DMAs), two at the beginning of the zone and two at the end. The area between the two groups of DMAs shall contain a user zone for recording user data, which are subdivided into groups, and a Working Defect List (WDL) zone for recording addresses for the defect management information temporarily.

18.1 Defect Management Areas (DMA)

The four Defect Management Areas (DMA) can contain information on the structure of the Data zone and on the defect management. The length of each DMA shall be 263 sectors. Two of the DMAs, DMA1 and DMA2, are located near the inner diameter of the disk; two others, DMA3 and DMA4, shall be located near the outer diameter of the disk. The boundaries of the DMAs are indicated in table 3.

Copyright International Organization for Standardization
Provided by IHS under license with ISO
No reproduction or networking permitted without license from IHS Not for Resale

Table 3 - Location of the DMAs

	Beginning		Ending		Length (sectors)
	Track No.	Sector No.	Track No.	Sector No.	
DMA1	0	0	3	52	263
Reserved	3	53	4	34	52
DMA2	4	35	8	17	263
Reserved	8	18	8	69	52
DMA3	53563	0	53564	112	263
Reserved	53564	113	53567	74	412
DMA4	53567	75	53569	37	263
Reserved	53569	38	53571	149	412

Each DMA can contain a Disk Structure Table (DST), a Primary Defect List (PDL) and a Secondary Defect List (SDL). All four PDL's and SDL's shall be identical. This means that an entry in a table or list must be made four times, i.e. once in each DMA.

After initialization of the media, each DMA shall have the following content. The first sector shall contain the DST. The second sector shall be the first sector of the PDL. The length of the PDL is determined by the number of entries in it. The SDL shall be located immediately after the PDL. The length of the SDL is determined by the number of entries in it. The contents of the remaining sectors of the DMA's after the SDL shall be ignored on interchange.

The contents of the DST are specified in the next paragraph, those of the PDL and SDL in clause 19.

18.2 Disk Structure Table (DST)

The Disk Structure Table (DST) shall have the length of one sector. It specifies the method of initialization, the division of the User zone in groups, and the start address of the PDL SDL and WDL, and the length of the WDL. The DST shall have been recorded in the first sector of each DMA after initialization of the media. The following information on the disk structure shall be recorded in each of the four DST's:

Copyright International Organization for Standardization
Provided by IHS under license with ISO
No reproduction or networking permitted without license from IHS
Not for Resale

Table 4 - Content of the DST

Byte	DST Content
0	(0A), DST Identifier
1	(0A), DST Identifier
2	(00)
3	(01), The disk has been certified (02), The disk has not been certified
4	g, Number of Groups in the User Zone, MSB
5	g, Number of Groups in the User Zone, LSB
6	n, Number of Data Sectors per Group in the User Zone, MSB
7	n, Number of Data Sectors per Group in the User Zone
8	n, Number of Data Sectors per Group in the User Zone
9	n, Number of Data Sectors per Group in the User Zone, LSB
10	m, Number of Spare Sectors per Group in the User Zone, MSB
11	m, Number of Spare Sectors per Group in the User Zone
12	m, Number of Spare Sectors per Group in the User Zone
13	m, Number of Spare Sectors per Group in the User Zone, LSB
14	Address of the First Sector of the PDL (Track Number, MSB)
15	Address of the First Sector of the PDL (Track Number)
16	Address of the First Sector of the PDL (Track Number, LSB)
17	Address of the First Sector of the PDL (Sector Number)
18	Address of the First Sector of the SDL (Track Number, MSB)
19	Address of the First Sector of the SDL (Track Number)
20	Address of the First Sector of the SDL (Track Number, LSB)
21	Address of the First Sector of the SDL (Sector Number)
22	Track Number of the First Sector of the WDL Zone, MSB
23	Track Number of the First Sector of the WDL Zone
24	Track Number of the First Sector of the WDL Zone
25	Track Number of the First Sector of the WDL Zone, LSB
26	Number of Sectors in the WDL Zone, MSB
27	Number of Sectors in the WDL Zone
28	Number of Sectors in the WDL Zone
29	Number of Sectors in the WDL Zone, LSB
30	(00)
-1023	

18.3 User zone

The User zone is intended for the user to write his data into. This zone shall start at track 9, sector 0.

After certification of the media, the User zone shall have been partitioned into g consecutive groups of equal size followed by an unspecified number of remaining sectors. The first group shall start at the beginning of the User zone. The value of g is up to the user, but shall not be greater than 16384. Each group shall comprise n data sectors followed by m spare sectors. There is no restriction on the value of n and m. The values of g, n and m shall have been recorded in the DST.

Copyright International Organization for Standardization
Provided by IHS under license with ISO
No reproduction or networking permitted without license from IHS Not for Resale

18.4 WDL zone

The WDL zone is intended to store replacement informations of defect management temporarily before the number of replacement informations which have not been listed in the SDL come up to sufficient number to fill a whole sector of new SDL sector. This zone shall be located immediately before the DMA3 and be divided into two areas each of which shall contain identical WDL sectors. The first WDL area shall start at sector 0 of the WDL zone and the second WDL area shall start at the first sector of the latter half of the WDL zone. The number of sectors in the WDL zone shall be even. The WDL zone shall have sufficient size to manage at least 16384 replacements.

19 Defect management

Defective sectors in the User zone shall be replaced by good sectors according to the defect management scheme described below. The disk shall be initialized before use. This International Standard allows media initialization with or without certification. Defective sectors can be handled by a sector slipping algorithm or a linear replacement algorithm. The total number of defective sectors shall not be greater than 16384.

19.1 Media initialization

During media initialization four DMA's are recorded prior to the first use of the disk. The Recording zone shall be partitioned into g groups, each containing n data sectors and m spare sectors as specified in 18.2. The spare sectors can be used as replacement for defective data sectors. Media initialization can include a certification of the zone, in which procedure initially defective sectors are skipped.
The values of g, n and m shall be recorded in the DST. The PDL and SDL shall be recorded in the four DMAs. If the disk is not certified, both lists shall be empty immediately after media initialization.

19.2 Certification

If the disk is certified, the certification shall be applied to the data sectors and to the spare sectors in the groups. The method of certification is not stated by this International Standard. Defective sectors found during certification shall be handled by the Slipping Algorithm (See 19.2.1.) or, where applicable, by the Linear Replacement Algorithm (See 19.2.2.). Defective sectors shall not be used for reading or writing. Guidelines for replacing defective sectors are given in annex H.

The total number of defective sectors shall not be greater than 16384.
The certified media shall provide virtually error-free groups.

19.2.1 Slipping algorithm

The defective sector shall be replaced by the first good sector following the defective sector. The algorithm causes each data sector after a defective sector to be replaced by its next sector, and so causes a slip of one sector towards the end of the group. The last data sectors will slip into the area with spare sectors. The address of a defective sector is written in the PDL. If there are no spare sectors left in the group, the following defective sectors shall be handled by the linear replacement algorithm.

19.2.2 Linear replacement algorithm

The defective sector shall be replaced by the first available good spare sector of the group, i.e. after the data sectors that have been slipped in the spare area. If there are no spare sectors left in the group, the defective sector shall be replaced by the first good spare sector of another group. The address of the defective sector and of the spare sector is written in the SDL.

Copyright International Organization for Standardization
Provided by IHS under license with ISO
No reproduction or networking permitted without license from IHS Not for Resale

19.3 Disks not certified

The Linear Replacement Algorithm is also used to handle sectors found defective on disks which have not been certified.

A defective sector shall be replaced by the first available good spare sector of the group. If there are no spare sectors left in the group, the defective sector shall be replaced by the first available spare sector of another group. The address of the defective sector and of the replacement sector shall be recorded in the SDL.

19.4 Write procedure

When writing data in the sectors of a group, a defective sector listed in the PDL shall be skipped, and the data shall be written in the corresponding slipped data sector. If the disk is not certified, the PDL need not be consulted before writing.

If during or after writing a data sector is found to be defective, it shall be rewritten in the spare sector assigned by the linear replacement algorithm, with the appropriate entries being appended into the WDL together with the addresses of previous replacement information. The new WDL shall be recorded twice into a sector of the WDL area. If any of the two WDL sectors is found to be defective, both WDL sectors shall be rewritten in the next available sectors in the WDL area respectively. When the number of replacement information in the WDL fill a whole sector, the contents of the newest WDL shall be recorded four times into a sector of each DMA as the newly appended sector of the SDL.

19.5 Primary Defect List (PDL)

The Primary Defect List (PDL) is made during certification of the recording zone or is obtained in another way, and shall be recorded at the end of the media initialization process. If the data zone is not certified and a PDL is not obtained in another way, an empty PDL shall be recorded (See byte 3 of the DST.).

The PDL contains the addresses of all defective sectors to be replaced according to the slipping algorithm. The addresses shall be in ascending order. The PDL shall be recorded in the minimum number of sectors necessary, and it shall begin in the first user data byte of the first sector. All not-defined bytes of the last sector of the PDL shall be set to (FF). The following information shall be recorded in each of the four PDL's:

--`,,```,,,,````-`-`,,`,,`,`,,`---

Copyright International Organization for Standardization
Provided by IHS under license with ISO
No reproduction or networking permitted without license from IHS Not for Resale

Table 5 - Content of the PDL

Byte	PDL Content
0	(00), PDL Identifier
1	(01), PDL Identifier
2	Number of Address in the PDL, MSB
3	Number of Address in the PDL, LSB (if bytes 2 and 3 are (00), byte 3 is the end of the PDL)
4	Address of the First Defective Sector (Track Number, MSB)
5	Address of the First Defective Sector (Track Number)
6	Address of the First Defective Sector (Track Number, LSB)
7	Address of the First Defective Sector (Sector Number)
	.....
x-3	Address of the Last Defective Sector (Track Number, MSB)
x-2	Address of the Last Defective Sector (Track Number)
x-1	Address of the Last Defective Sector (Track Number, LSB)
x	Address of the Last Defective Sector (Sector Number)

19.6 Secondary Defect List (SDL)

The Secondary Defect List (SDL) is made during regular use. There shall be an SDL on the disk after initialization of the media.

The Secondary Defect List (SDL) shall contain entries in the form of the address of a defective data sector and the address of the spare sector by which it is replaced. An address shall not occur more than once in the SDL. The addresses of the replaced sectors need not be listed in ascending order.

Each SDL sector shall have a header from byte 0 to 9, including a page number, byte 7. The first sector of the SDL has page number 1, consecutive sectors have consecutive page numbers.

The SDL shall be recorded in the minimum number of sectors necessary, and it shall begin in the first user data byte of the first sector. All not-defined bytes of the last sector of the SDL shall be set to (FF). The following information shall be recorded in each of the four SDL's:

Copyright International Organization for Standardization
Provided by IHS under license with ISO
No reproduction or networking permitted without license from IHS Not for Resale

Table 6 - Content of the SDL

Byte	SDL Content
0	(00), SDL Identifier
1	(02), SDL Identifier
2	(00)
3	(00), Indicating that the SDL has no sublist
4	Length of the SDL in bytes from byte 8 to 1017, MSB
5	Length of the SDL in bytes from byte 8 to 1017, LSB (An empty SDL has length 7)
6	(00)
7	Page number of the SDL, positive integer and start from 1
8,9	(FF)
10	Address of the First Defective Sector (Track Number, MSB)
11	Address of the First Defective Sector (Track Number)
12	Address of the First Defective Sector (Track Number, LSB)
13	Address of the First Defective Sector (Sector Number)
14	Address of the First Replacement Sector (Track Number, MSB)
15	Address of the First Replacement Sector (Track Number)
16	Address of the First Replacement Sector (Track Number, LSB)
17	Address of the First Replacement Sector (Sector Number)
1010	Address of the 126th Defective Sector (Track Number, MSB)
1011	Address of the 126th Defective Sector (Track Number)
1012	Address of the 126th Defective Sector (Track Number, LSB)
1013	Address of the 126th Defective Sector (Sector Number)
1014	Address of the 126th Replacement Sector (Track Number, MSB)
1015	Address of the 126th Replacement Sector (Track Number)
1016	Address of the 126th Replacement Sector (Track Number, LSB)
1017	Address of the 126th Replacement Sector (Sector Number)
1018 -1023	(FF)

19.7 Working Defect List (WDL)

The Working Defect List (WDL) is made during regular use.
The Working Defect List (WDL) contains entries in the form of the address of a defective data sector and the address of the spare sector by which it is replaced. An address shall not occur more than once in the WDL. The addresses of the replaced sectors need not be listed in ascending order.

Each WDL sector shall have a header from byte 0 to 9, including a page number, byte 7. Every WDL shall have a page number which shall be the page number of the newest SDL plus 1. If there is no SDL, the page number of the WDL shall be 1.

The WDL shall be recorded in the minimum number of sectors necessary, and it shall begin in the first user data byte of the first sector. All not-defined bytes of the last sector of the WDL shall be set to (FF). The following information shall be recorded in each of the two WDL's:

Copyright International Organization for Standardization
Provided by IHS under license with ISO
No reproduction or networking permitted without license from IHS Not for Resale

Table 7 - Content of the WDL

Byte	WDL Content
0	(00), WDL Identifier
1	(03), WDL Identifier
2	(00)
3	(00), Indicating that the WDL has no sublist
4	Length of the WDL in bytes from byte 8 to x, MSB
5	Length of the WDL in bytes from byte 8 to x, LSB (An empty WDL has length 7)
6	(00)
7	Page number of the WDL, positive integer and start from 1
8, 9	(FF)
10	Address of the First Defective Sector (Track Number, MSB)
11	Address of the First Defective Sector (Track Number)
12	Address of the First Defective Sector (Track Number, LSB)
13	Address of the First Defective Sector (Sector Number)
14	Address of the First Replacement Sector (Track Number, MSB)
15	Address of the First Replacement Sector (Track Number)
16	Address of the First Replacement Sector (Track Number, LSB)
17	Address of the First Replacement Sector (Sector Number)
	.....
x-7	Address of the Last Defective Sector (Track Number, MSB)
x-6	Address of the Last Defective Sector (Track Number)
x-5	Address of the Last Defective Sector (Track Number, LSB)
x-4	Address of the Last Defective Sector (Sector Number)
x-3	Address of the Last Replacement Sector (Track Number, MSB)
x-2	Address of the Last Replacement Sector (Track Number)
x-1	Address of the Last Replacement Sector (Track Number, LSB)
x	Address of the Last Replacement Sector (Sector Number)
x+1 -1023	(FF)

Copyright International Organization for Standardization
Provided by IHS under license with ISO
No reproduction or networking permitted without license from IHS Not for Resale

Section 4 : Characteristics of embossed information

20 Method of testing

The format of the embossed information on the disk has been defined in the previous clauses 13 to 18. The following clauses 21 to 23 specify the signals from grooves, Headers and embossed data, as obtained in the Reference Drive defined in clause 9.

Clauses 21 to 23 specify only the average quality of the embossed information. Local deviations from the specified values, called defects, can cause tracking errors, erroneous headers or errors in the Data fields. These errors are covered by Section 6.

20.1 Environment

All signals in clauses 21 to 23 shall be within their specified ranges with the cartridge in any environment in the range of allowed operating environments defined in 8.1.2.

20.2 Use of the Reference Drive

All signals specified in clauses 21 to 23 shall be measured in the indicated channels of the Reference Drive. The drive shall have the following characteristics for the purpose of these tests:

20.2.1 Optics and mechanics

The focussed optical beam shall have the properties defined in clause 9.2 a) to e). The disk shall rotate as specified in 9.5.

20.2.2 Read power

The optical power incident on the entrance surface of the disk and used for reading the information shall be in the range from 0,5 mW to $P_{max.}$. $P_{max.}$ shall be as specified below:

a) PEP Control zone
The read power shall not exceed 0,7 mW

b) SFP Control zone
The read power shall not exceed the value given in byte 6 of the PEP Control zone

c) The other zone
The read power shall not exceed the value given in byte 21 of the SFP Control zone

20.2.3 Read channels

The drive shall have a read channel, in which the total amount of light in the exit pupil of the objective lens is measured. This channel can have the implementation as given by Channel 1 in clause 9.1 and 9.3.

20.2.4 Tracking

During the measurement of the signals, the focus of the optical beam shall have an axial deviation of not more than

$$e_{max.}(\text{axial}) = \pm 1{,}0 \text{ mm}$$

from the recording layer, and it shall have a radial deviation of not more than

Copyright International Organization for Standardization
Provided by IHS under license with ISO
No reproduction or networking permitted without license from IHS Not for Resale

$e_{max.}$(radial) = ± 0,1 mm

from the centre of a track.

20.3 Definition of signals

All signals are linearly related to currents through a photo-diode detector, and are therefore linearly related to the optical power falling on the detector.

The signals from the two halves of the split photo-diode detector in the tracking channel are indicated by I_1 and I_2. The signals in the tracking channel are referenced to the signal $(I_1 + I_2)_a$, which is the sum of the signals obtained from an unrecorded, ungrooved area in the Information zone, such as the ungrooved part of the Initial zone or the Mirror field in a sector.

The signals in Channel 1 are referenced to the signal I_o, which is the signal in Channel 1 from an unrecorded, ungrooved area in the Information zone.

An illustration of the signals specified in clauses 21 and 22 is given in figure 16.

Copyright International Organization for Standardization
Provided by IHS under license with ISO
No reproduction or networking permitted without license from IHS Not for Resale

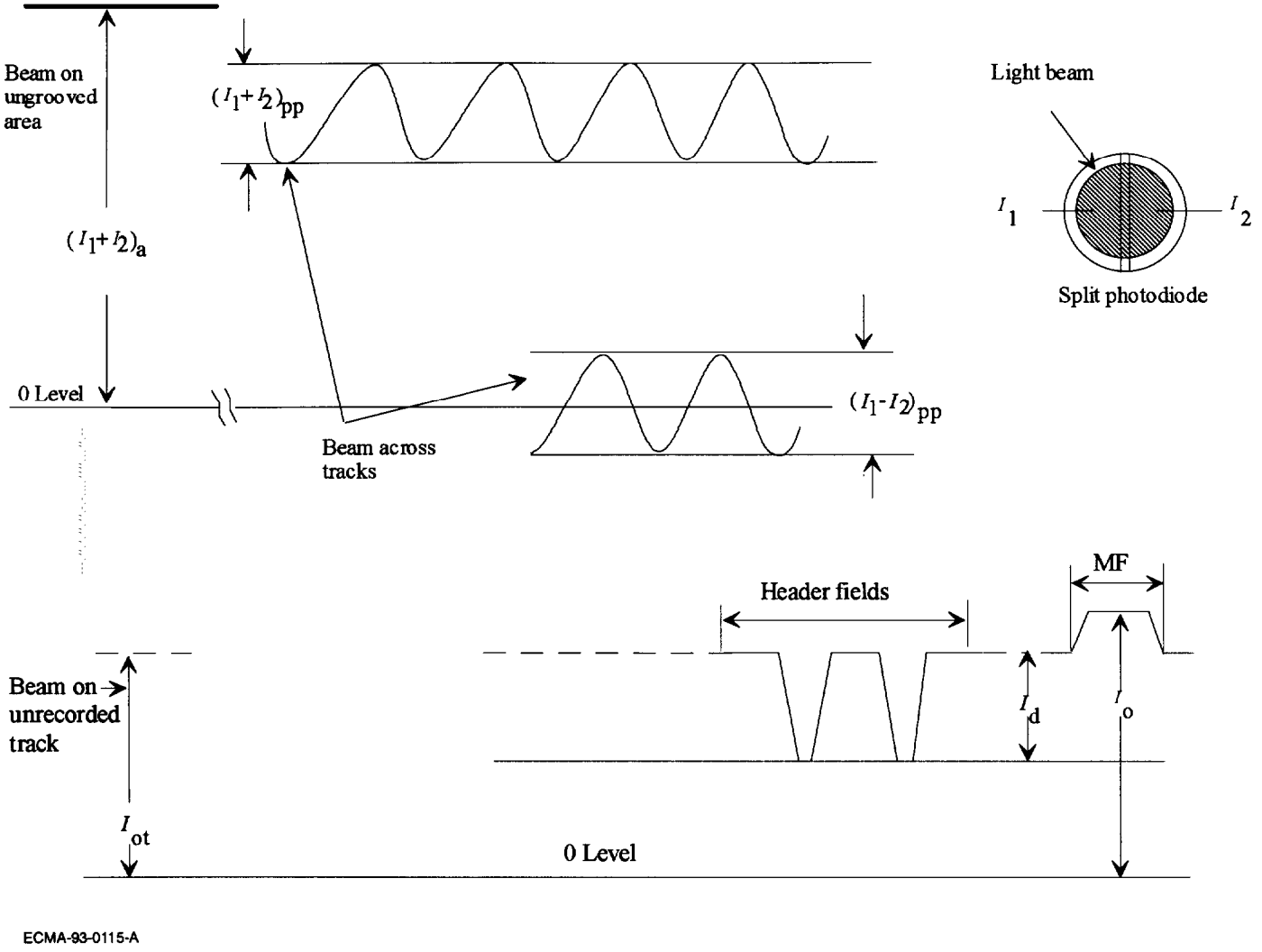

Figure 16 - Signals from grooves in the tracking channel (top), signals from headers in Channel 1 (bottom).

Copyright International Organization for Standardization
Provided by IHS under license with ISO
No reproduction or networking permitted without license from IHS
Not for Resale

21 Signals from grooves

The shape of the grooves and the embossed information shall be such that the following requirements are met.

21.1 Track-cross signal

The track-cross signal is the sinusoidal sum signal ($I_1 + I_2$) in the tracking channel, when the focus of the optical beam crosses the tracks. The signal can be used by the drive to locate the centre of the tracks. The peak-to-peak value of the track-cross signal shall be such that

$$0{,}30 \leq \frac{(I_1 + I_2)_{pp}}{(I_1 + I_2)_a} \leq 0.60$$

in any grooved area in the Information zone, otherwise the PEP Control zone or SFP Control zone, with or without embossed data like Header fields and Recording fields.

The uniformity of the track-cross signal shall be such that the above ratio shall not vary by more than 30 % over any grooved area without embossed data and, separately, over any grooved area with embossed Header fields and Recording fields.

21.2 Push-pull signal

The push-pull signal is the sinusoidal difference signal ($I_1 - I_2$) in the tracking channel, when the focus of the optical beam crosses the tracks. The signal can be used by the drive for radial tracking. The peak-to-peak value of the push-pull signal shall comply with

$$0{,}40 \leq \frac{(I_1 - I_2)_{pp}}{(I_1 + I_2)_a} \leq 0{,}65$$

in any grooved area, otherwise the SFP Control zone, with or without embossed data in the Information zone.

The uniformity of the push-pull signal shall be such that the above ratio shall not vary by more than 30 % over any grooved area without embossed data and, separately, over any grooved area with embossed Header fields and Recording fields.

21.3 On-track signal

The on-track signal is the signal in Channel 1 when tracking in a grooved area without embossed data. The on-track signal I_o shall comply with

$$0{,}7 \leq \frac{I_a}{I_o} \leq 1{,}0 .$$

21.4 Phase depth

The phase depth of the grooves shall be less than 180°.

21.5 Track location

The tracks are located at those radii on the disk where the push-pull signal equals zero and the track-cross signal has its maximum value.

Copyright International Organization for Standardization
Provided by IHS under license with ISO
No reproduction or networking permitted without license from IHS Not for Resale

22 Signals from headers

The signals obtained from the embossed Headers shall be measured in Channel 1 of the Reference Drive.

The signal from an embossed mark in the recording layer is defined as the peak-to-peak value of the modulation in the detector current in Channel 1 caused by the mark when the beam follows a recorded track.

The level of all signals from embossed marks shall be lower than I_a.

The displacement of the embossed marks in the Header from their intended position relative to the start of the Header shall not exceed 0,1 Channel bit.

22.1 VFO1 and VFO2

The signal I_{vfo} from the marks in the VFO1 and VFO2 fields shall meet the requirement

$$|I_{vfo}| / I_o \geq 0{,}25$$

In addition the condition

$$I_{vfo} / I_{hmax} \geq 0{,}5$$

shall be satisfied within each header, where I_{hmax} is the maximum signal from marks in the fields defined in 22.2 of that header.

22.2 Address Sync, Address field and Postamble

The signal I_h from marks in the Address Sync, Address and Postamble fields shall meet the requirements

$$|I_h| / I_o \geq 0{,}25$$

$$I_{hmin} / I_{hmax} \geq 0{,}5$$

The last requirement applies over any header. I_{hmin} and I_{hmax} are the signals with minimum and maximum amplitude in those fields of a sector mentioned above.

23 Signals from embossed recording fields

In the SFP Control zone, the Recording field of all sectors shall contain embossed marks. The signals from these marks as read in Channel 1 shall be as follows:

The signal I_d from marks in the Recording fields of the SFP Control zone shall meet the requirements

$$|I_d| / I_o \geq 0{,}25$$

$$I_{dmin} / I_{dmax} \geq 0{,}5$$

The last requirement applies over any Recording field. I_{dmin} and I_{dmax} are the signals with minimum and maximum amplitude in the Recording field of a sector.

Copyright International Organization for Standardization
Provided by IHS under license with ISO
No reproduction or networking permitted without license from IHS Not for Resale

24 Signals from PEP control zone

The density of tracks and the shape of marks in the PEP Zone shall be such that the cross-track loss shall meet the requirement

$$\frac{I_{mmax}}{I_{mmin}} \leq 2{,}0$$

The signal I_m is the maximum amplitude in a group of three successive marks. I_{mmax} is the maximum value and I_{mmin} is the minimum value of I_m obtained over one revolution. I_{mmax} shall be greater than $0{,}4I_o$. The effect of defects shall be ignored.

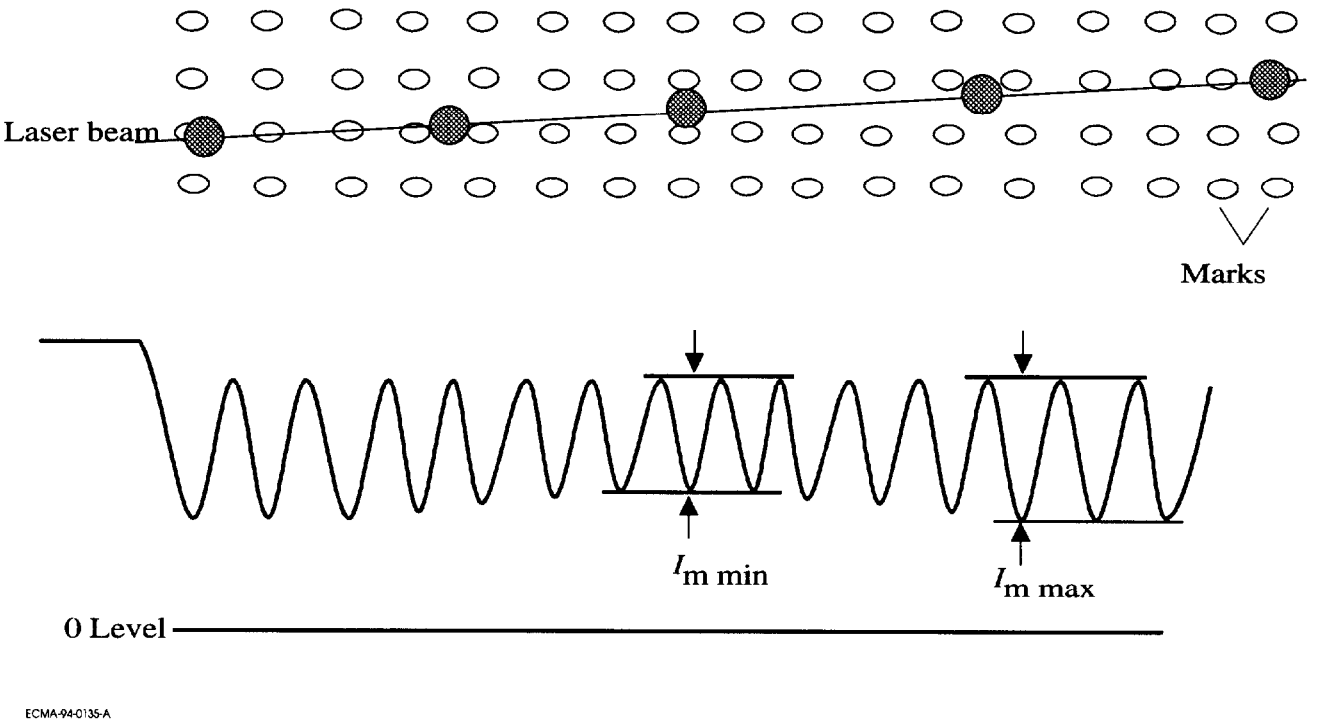

Figure 17 - Path of the laser beam when crossing tracks and the resulting PEP signals

Copyright International Organization for Standardization
Provided by IHS under license with ISO
No reproduction or networking permitted without license from IHS
Not for Resale

Section 5 : Characteristics of the recording layer

25 Method of testing

Clauses 26 and 27 describe a series of tests to assess the properties of the recording layer, as used for writing data. The tests shall be performed only in the Recording field of the sectors. The write and read operations necessary for the tests shall be made on the same Reference Drive.

Clauses 26 and 27 specify only the average quality of the recording layer. Local deviations from the specified values, called defects, can cause write problems. These defectsare covered by Section 6.

25.1 Environment

All signals in clauses 26 and 27 shall be within their specified ranges with the cartridge in any environment in the range of allowed operating environment defined in 8.1.2, unless otherwise specified.

25.2 Reference Drive

The write test described in clauses 26 and 27 shall be measured in Channel1 of the Reference Drive. The drive shall have the following characteristics for the purpose of these tests.

25.2.1 Optics and mechanics

The focused optical beam shall have the properties defined in 9.2. The disk shall rotate as specified in 9.5.

25.2.2 Read power

The optical power incident on the entrance surface of the disk and used for reading the information shall be in the range from 0,5 mW to P_{max}.

25.2.3 Read channel

The Reference Drive shall have a read channel which can detect marks in the recording layer. This channel shall have an implementation equivalent to that given by Channel 1 in 9.3.

25.2.4 Tracking

During the measurement of the signals, the focus of the optical beam shall follow the tracks as specified in 20.2.4.

25.3 Write conditions

Marks are written on the disk by pulses of optical power.

Copyright International Organization for Standardization
Provided by IHS under license with ISO
No reproduction or networking permitted without license from IHS Not for Resale

25.3.1 Write pulse

The shape of the write pulse shall be as given in figure 18.

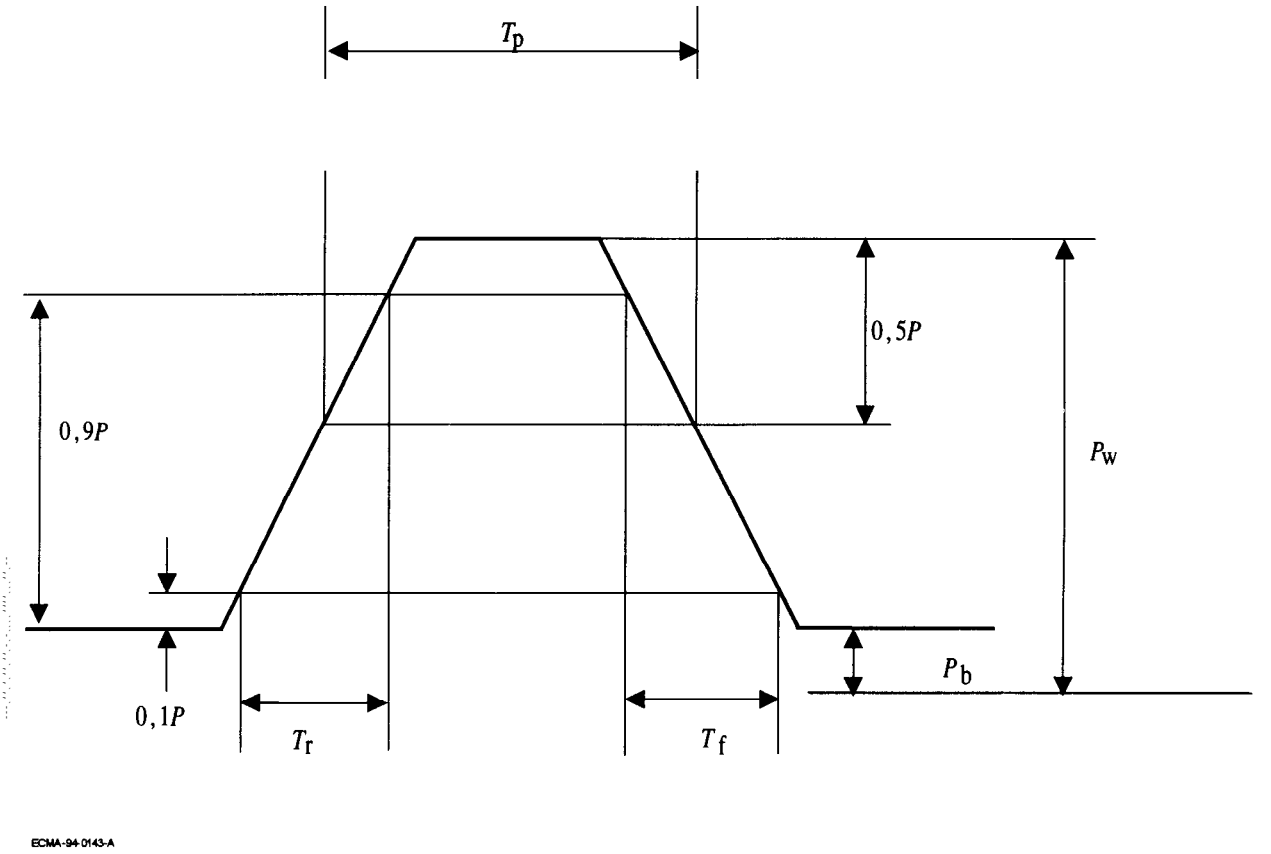

Pw : Write power
Tr : Rise time
Tp : Write pulse width
Pr : Read power
Tf : Fall time
P : Pw - Pr

Figure 18 - Definition of the pulse shape

The rise and fall times *Tr* and *Tf* shall each be less than 5ns.

25.4 Definition of signals

The signals in Channel 1 are linearly related to the sum of the currents through the photo-diodes J_1, J_2, J_3 and J_4, and are therefore linearly related to the optical power falling on the detectors.

Copyright International Organization for Standardization
Provided by IHS under license with ISO
No reproduction or networking permitted without license from IHS Not for Resale

26 Optical characteristics

26.1 Baseline reflectivity

The baseline reflectivity shall be within the range of

$$7\% < R < 50\%$$

where R is the baseline reflectivity,
and media sensor holes should indicate whether it belongs to group a or b;

a : 7% to 23%
b : 15% to 50%

The baseline reflectivity shall be specified on the control tracks in annex F. The measurement of reflectivity shall be made from the protective layer side in an unrecorded blank area of the disk with focused-beam with optical axis parallel to the normal to the protective layer.

26.2 Uniformity of reflectivity

Nominal baseline reflectivity shall not vary more than ± 12% of the nominal baseline value in a given disk.

27 Read and write characteristics

27.1 Sensitivity of the recording layer

27.1.1 Optical conditions

The optical conditions for sensitivity of the recording layer shall be in accordance with clause 9.

27.1.2 Write power and writing conditions

The write power is the power required during a light pulse of the specified duration to make marks with characteristics as specified in 27.1.3 at a specific rotational frequency and a radial position.

The write power and writing conditions shall be specified on the SFP Control zone.

The required power shall not exceed 20 mW.

27.1.3 Characteristics of the written marks

The characteristics of the written marks are determined by a measurement at a low frequency (VL) condition, which is defined by any local mark repetition corresponding to 8 Channel bits length mark and space or lower, and by a measurement at a high frequency (VH) condition, which is defined by any local mark repetition corresponding to 2 Channel bits length mark and space. Definition of the measurement parameters is given in figure 19 for the two types of media with different reflectivity polarity.
The following equations shall be satisfied:

$$VL \geq VS * 0,8$$

where VS is typical mark amplitude given in fraction of VG as specified on the control tracks, and $VH/VL \geq 0,4$.

Copyright International Organization for Standardization
Provided by IHS under license with ISO
No reproduction or networking permitted without license from IHS Not for Resale

27.1.4 Definition and measurement conditions

The reflectivity characteristics of user-written data are shown in figure 19 for the two types of media with different reflectivity polarity.

The peak to peak values of the highest and the lowest frequency are denoted by VH and VL, respectively. The groove or land level of user-written data is denoted by VG. Modulation degree is defined by VL/VG and resolution is defined by VH/VL.

Reflectivity polarity	Definition and measurement	Modulation degree	Resolution
High to Low	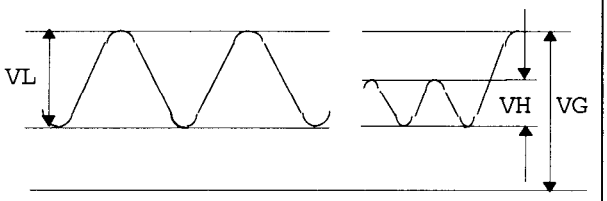	VL/VG	VH/VL
Low to High	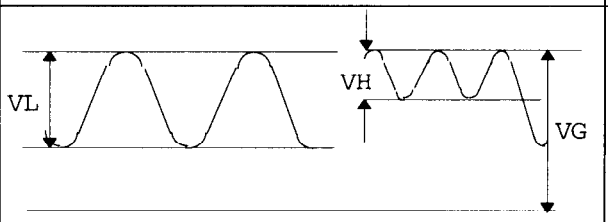	VL/VG	VH/VL

Figure 19 - Reflectivity characteristics of user-written data

27.2 Read characteristics

27.2.1 Optical conditions

The optical conditions for read characteristics shall be in accordance with clause 9.

27.2.2 Read power

The maximum value for the read power on the user-written area of the disk shall be specified on the SFP control tracks. The maximum read power for reading the SFP control tracks shall be specified on the PEP control tracks.

The maximum power required to read the PEP control tracks shall be 0,7 mW.

27.2.3 Reflectivity characteristics

The reflectivity characteristics shall be in accordance with 27.2.1 and 27.1.3. The reflectivity characteristics shall be specified in the control track.

27.2.4 Carrier-to-noise ratio

The carrier-to-noise ratio (C/N) shall be more than 45 dB.
Measuring conditions should be in the following conditions;

- rotational frequency : 25 Hz
- carrier frequency : 15,5 MHz

Copyright International Organization for Standardization
Provided by IHS under license with ISO
No reproduction or networking permitted without license from IHS Not for Resale

- resolution bandwidth of spectrum analyzer : 30 kHz
- read-out point of carrier and noise level :shown in figure 20

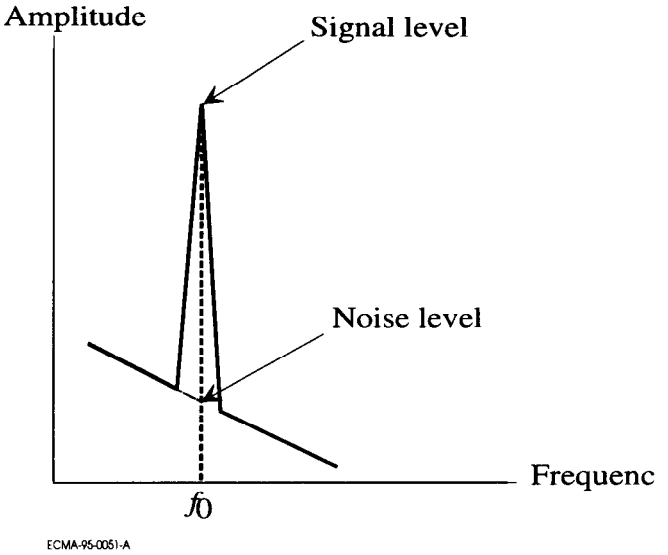

Figure 20 - Power versus frequency characteristics curve

27.2.5 Cross-talk

The test on cross-talk shall be carried out on any group of five adjacent unrecorded tracks in the Data zone.

Write a series of 8 Channel bits long marks spaced 8 Channel bits apart in the recording field of sectors in track *n*. The write conditions shall be as specified in 25.3.

Read the recording fields of sectors in tracks (*n*-1), *n* and (*n*+1) under the conditions 25.2.2 and 25.2.3.

The cross-talk from the track *n* to the track (*n*-1) and to the track (*n*+1) shall be lower than -26 dB.

27.2.6 Timing jitter

The test on timing jitter shall be carried out on any track with no defective sector in the Data zone.

Write a test pattern of M sequence generated by the generating polynomial

$$G(X)=X^{10}+X^{3}+1$$

under the condition given in 27.1.2.
Read and detect the data signal with no equalization. Adjust the threshold fractional value so that the readback signal for the 3T mark is exactly 3 channel bit time T long. If the threshold fractional value has to be greater than 0,75 or less than 0,25, then the writing power and/or pulse is incorrectly specified in the SFP zone and the measurement is invalid.

Measure the time intervals between successive edges in the readback signal for 10^5 intervals in random sampling. The value of timing jitter, the standard deviation (one sigma) of the measured time interval, shall be less than 7,5% of the time period T of one Channel bit.

Copyright International Organization for Standardization
Provided by IHS under license with ISO
No reproduction or networking permitted without license from IHS Not for Resale

Section 6 : Characteristics of user data

28 Method of testing

Clauses 29 and 30 describe a series of measurements to test conformance of the user data on the disk to this International Standard. It checks the legibility of both embossed and user-written data. The data is assumed to be arbitrary. The user-written data may have been written by any drive in any environment. The read tests shall be performed on the Reference Drive.

Whereas clauses 20 to 27 disregard defects, clauses 29 and 30 include them as an unavoidable deterioration of the read signals. The gravity of a defect is determined by the correctability of the ensuing errors by the Error Detection and Correction circuits in the read channel defined below. The requirements in clauses 29 and 30 define a minimum quality of the data, necessary for data interchange.

28.1 Environment

All signals in clauses 29, 30 shall be within their specified ranges with the cartridge in any environment in the range of allowed operating environments defined in 8.1.2. It is recommended that before testing the entrance surface of the optical disk shall be cleaned according to the instructions of the manufacturer of the disk.

28.2 Reference Drive

All signals specified in clauses 29 to 30 shall be measured in the indicated channels of the Reference Drive. The drive shall have the following characteristics for the purpose of these tests:

28.2.1 Optics and mechanics

The focussed optical beam shall have the properties defined in clause 9.2. The disk shall rotate as specified in 9.5.

28.2.2 Read power

The optical power incident on the entrance surface of the disk and used for reading the information shall be in the range from 0,5 mW to *P*max.

28.2.3 Read amplifiers

The read amplifiers after the photo-detectors in Channel 1 shall be as specified in 9.3.

28.2.4 Analog-to-binary converters

The signal from the read amplifier shall be converted from analog-to-binary with an edge detector.

28.2.5 Data clock

The drive shall have a data clock which can lock to the RLL(1,7)
encoded data on the disk. The data clock provides the Channel bit windows for timing the binary signals.

28.2.6 Binary-to-digital conversion

The rising and falling point of the binary signal represent the Channel bit data ONE. The binary signal shall be converted from binary-to-digital with a converter.

Copyright International Organization for Standardization
Provided by IHS under license with ISO
No reproduction or networking permitted without license from IHS Not for Resale

28.2.7 Error correction

Correction of errors in the data bytes shall be carried out by an Error Detection and Correction system based on the definition in annex E3.

28.2.8 Tracking

During the measurement of the signals, the focus of the optical beam shall follow the tracks as specified in 20.2.4.

29 Minimum quality of a sector

This clause specifies the minimum quality of the Header and Recording field of a sector as required for interchange of the data contained in that sector. The quality shall be measured on the Reference Drive specified in 28.2.

A byte error occurs when one or more bits in a byte have a wrong setting, as detected by the ECC and/or CRC circuits.

29.1 Address fields

At least one of the three Address fields in a Header read in Channel 1 shall not have any byte errors, as checked by the CRC in the field.

29.2 User-written data

The user-written data in a sector shall not contain any byte errors that cannot be corrected by the error correction defined in 28.2.7.

30 Data interchange requirements

A disk offered for interchange of data shall comply with the following requirements.

30.1 Tracking

The focus of the optical beam shall not jump tracks unintentionally.

30.2 User-written data

Any sector written in the Information zone that does not comply with 29.1 and 29.2 shall have been replaced according to the rules of the defect management as defined in clause 19.

30.3 Quality of disk

The quality of the disk is reflected in the number of replaced sectors in the Information zone. This International Standard allows a maximum of 16384 replaced sectors.

Copyright International Organization for Standardization
Provided by IHS under license with ISO
No reproduction or networking permitted without license from IHS Not for Resale

Annex A
(normative)

Distortion test

A.1 The distortion test checks if the case is free from unacceptable distortions and protrusions. The test is made by placing the cartridge horizontally on a gauge.

A.2 The test gauge consists of a base plate on which four posts P_1, P_2, P_3 and P_4 are fixed so as to correspond to the four surfaces S_1, S_2, S_3 and S_4, respectively (See figure A.1.). The dimensions are as follows (See figure A.2.):

Posts P_1 and P_2

$D_a = 18{,}0 \text{ mm} \pm 0{,}10 \text{ mm}$

$D_b = 9{,}95 \text{ mm} \begin{smallmatrix} 0{,}00 \\ -0{,}10 \end{smallmatrix} \text{ mm}$

$H_a = 5{,}0 \text{ mm} \pm 0{,}10 \text{ mm}$

$H_b = 7{,}0 \text{ mm max.}$

Post P_3 and P_4

$D_c = 14{,}0 \text{ mm} \pm 0{,}10 \text{ mm}$

After assembly, the upper annular surfaces of the four posts shall lie between two horizontal planes spaced 0,05 mm apart.

A.3 The distortion shall be inspected by measuring the vertical distance between highest and lowest positions on the same surface.

A.4 The value of distortion shall not exceed 0,4 mm.

Copyright International Organization for Standardization
Provided by IHS under license with ISO
No reproduction or networking permitted without license from IHS Not for Resale

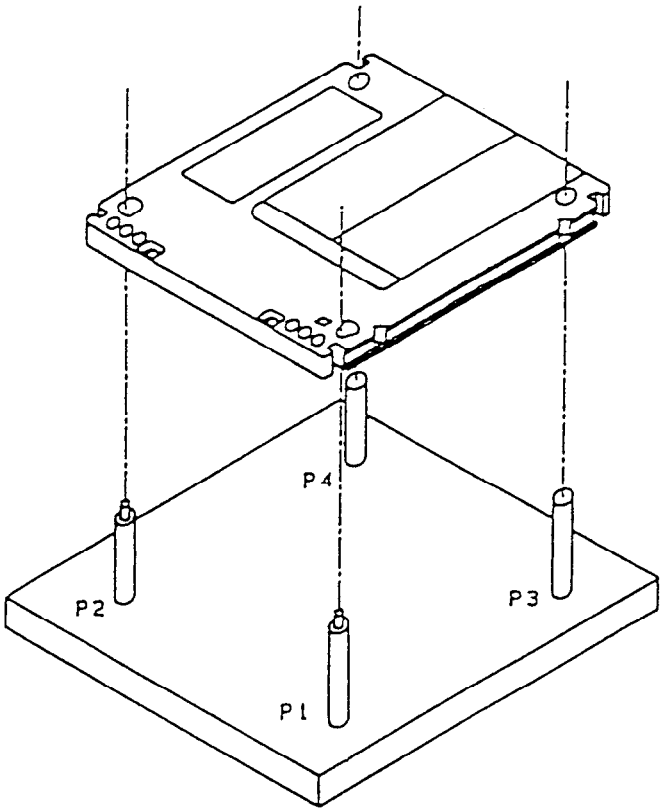

Figure A.1 - Distortion gauge

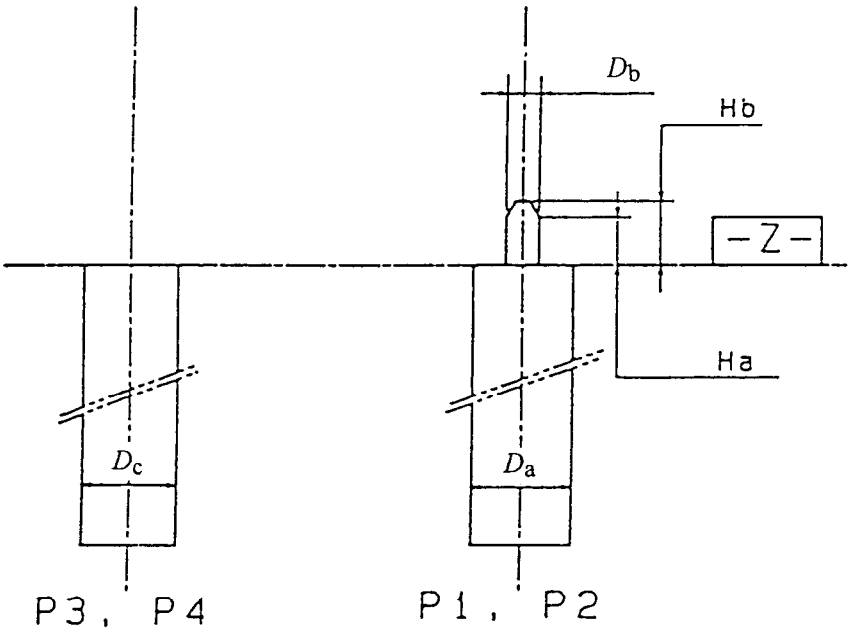

Figure A.2 - Details of posts

Copyright International Organization for Standardization
Provided by IHS under license with ISO
No reproduction or networking permitted without license from IHS
Not for Resale

Annex B
(normative)

Compliance test

B.1 The compliance test checks the flatness and flexibility of the case by forcing the four reference surfaces of the case into a plane. The test is made by placing the cartridge on the supports of a gauge and applying forces on the cartridge opposite to the supports.

B.2 The location of the four reference surfaces S_1, S_2, S_3 and S_4 is defined in clause 10.3.4 and figure 4.

B.3 The gauge shall consist of four poles forming the reference surface (See figure A.1 and figure A.2.).

B.4 The cartridge shall be placed with its reference surfaces onto the posts of the horizontal gauge. Four vertical downward forces of 2,5 N each, shall be exerted on the cartridge opposite each of the four posts.

B.5 Requirements

Under the conditions of B.4, three of the four surfaces S_1 to S_4 shall be in contact with the annular surface of their respective posts, and any gap between the remaining surface S and the annular surface of its post shall not exceed 0,1 mm.

--`,,```,,,,````-`-`,,`,,`,`,,`---

Copyright International Organization for Standardization
Provided by IHS under license with ISO
No reproduction or networking permitted without license from IHS Not for Resale

Annex C
(normative)

Track deviation measurement

The deviation of a track from its nominal location is measured in the same way as a drive sees a track, i.e. through a tracking servo. The strength of the reference servo used for the test is in general less than the strength of the same servo in a normal drive. The difference in strength is intended for margins in the drive. The deviation of the track is related to the tracking error between the track and the focus of the optical beam, remaining after the reference servo. The tracking error directly influences the performance of the drive, and is the best criterion for testing track deviations.

The specification of the axial and radial track deviation can be described in the same terms. Therefore, this annex applies to both axial and radial track deviations.

C.1 Relation between requirements

The acceleration required by the motor of the tracking servo to make the focus of the optical beam follow the tracks on the disk is a measure for the allowed deviation of the tracks. An additional measure is the allowed tracking error between the focus and the track. The relation between both is given in figure C.1, where the maximum allowed amplitude of a sinusoidal track deviation is given as function of the frequency of the deviation. It is assumed in the figure that there is only one sinusoidal deviation present at a time.

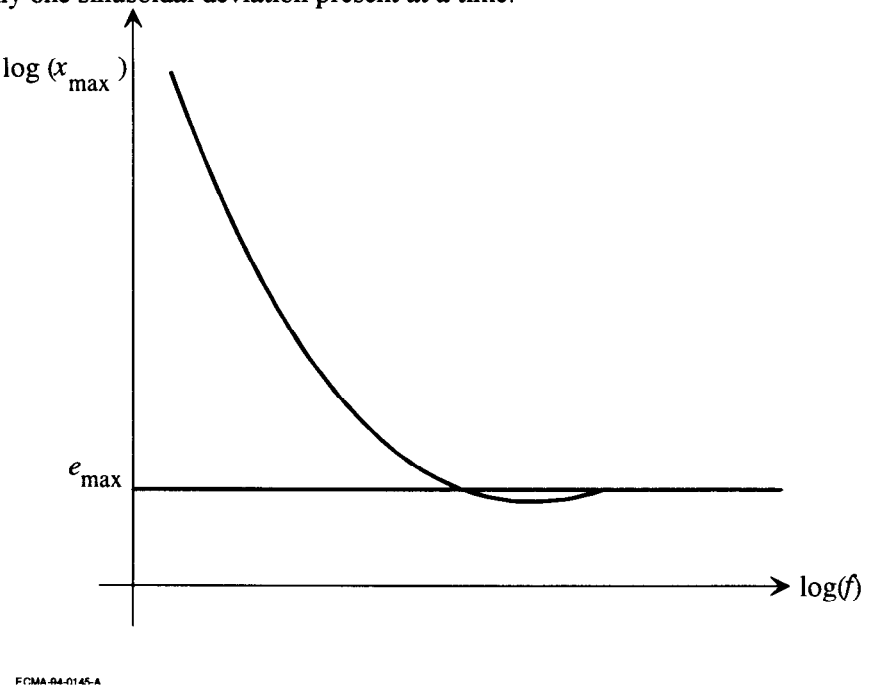

Figure C.1 - Maximum allowed amplitude of a single, sinusoidal track deviation

At low frequencies, the maximum allowed amplitude $x_{max.}$ is given by

$$x_{max.} = a_{max.} / (2\pi f)^2, \qquad (1)$$

where $a_{max.}$ is the maximum acceleration of the servo motor. At high frequencies we have

$$x_{max.} = e_{max.} \qquad (2)$$

where $e_{max.}$ is the maximum allowed tracking error. The connection between both frequency regions is given in C.3.

Copyright International Organization for Standardization
Provided by IHS under license with ISO
No reproduction or networking permitted without license from IHS
Not for Resale

C.2 Reference servo

The above restriction of the track deviations is equal to the restriction of the track deviations for a reference servo. A reference servo has a well-defined transfer function, and reduces a single, sinusoidal track deviation with amplitude $x_{max.}$ to a tracking error $e_{max.}$ as in figure C.1.

The open-loop transfer function of the reference servo shall be

$$H_S(i\omega) = \frac{1}{c}\left(\frac{\omega_0}{i\omega}\right)^2 \frac{1 + i\omega c / \omega_0}{1 + i\omega / c\omega_0} \qquad (3)$$

where $i = \sqrt{-1}$, $\omega = 2\pi f$ and $\omega_0 = 2\pi f_0$, with f_0 the 0-dB frequency of the open-loop transfer function. The constant c gives the cross-over frequencies of the lead-lag network of the servo: $f_1 = f_0 / c$ and $f_2 = f_0 \times c$. The reduction of a track deviation x to a tracking error e by the reference servo is given by

$$\frac{e}{x} = \frac{1}{1 + H_S} \qquad (4)$$

If the 0 dB frequency is specified as

$$\omega_0 = \sqrt{\frac{a_{max.} c}{e_{max.}}}, \qquad (5)$$

then a low-frequency track deviation with an acceleration a_{max} will be reduced to a tracking error $e_{max.}$, and a high-frequency track deviation will not be reduced. The curve in figure C.1 is given by

$$x_{max.} = e_{max.} \mid 1 + H_S \mid. \qquad (6)$$

The maximum acceleration required from the motor of this reference servo is

$$a_{max.}(\text{motor}) = e_{max.}\, \omega^2 \mid 1 + H_S \mid. \qquad (7)$$

At low frequencies ($f < f_0 / c$) applies

$$a_{max.}(\text{motor}) = a_{max.}(\text{track}) = \frac{\omega_0^2 e_{max.}}{c}. \qquad (8)$$

Hence, it is permitted to use $a_{max.}$(motor) as specified for low frequencies in 11.4.6 and 11.4.8 for the calculation of ω_0 of a reference servo.

Copyright International Organization for Standardization
Provided by IHS under license with ISO
No reproduction or networking permitted without license from IHS Not for Resale

C.3 Requirement for track deviation

The track deviations shall be such that, when tracking with a reference servo on a disk rotating at the specified frequency, the tracking error shall nowhere be larger than $e_{max.}$ during more than 12 ms.

The open-loop transfer function of the reference servo for axial and radial tracking shall be given by eq.(3) within an accuracy such that $| 1 + H |$ does not differ by more than ± 20 % from its nominal value in a bandwidth from 25 Hz to 100 kHz. The constant c shall be 3. The 0 dB frequency $\omega_0 / 2\pi$ shall be given by eq.(5), where $a_{max.}$ and $e_{max.}$ for axial and radial tracking are specified in 20.2.4.

The requirement for the transfer function of the phase-locked loop in the read channel (see 28.2.5) is the same as for the reference servo in the preceding paragraph.

C.4 Measurement implementation

Three possible implementations for an axial or radial measurement system have been given below. H_a is the open-loop transfer function of the actual tracking servo of the drive, H_S is the transfer function for the reference servo as given in eq.(3). x and y are the position of the track and the focus of the optical beam. "e"$_S$ is the tracking error after a reference servo, which signal has to be checked according to the previous paragraph.

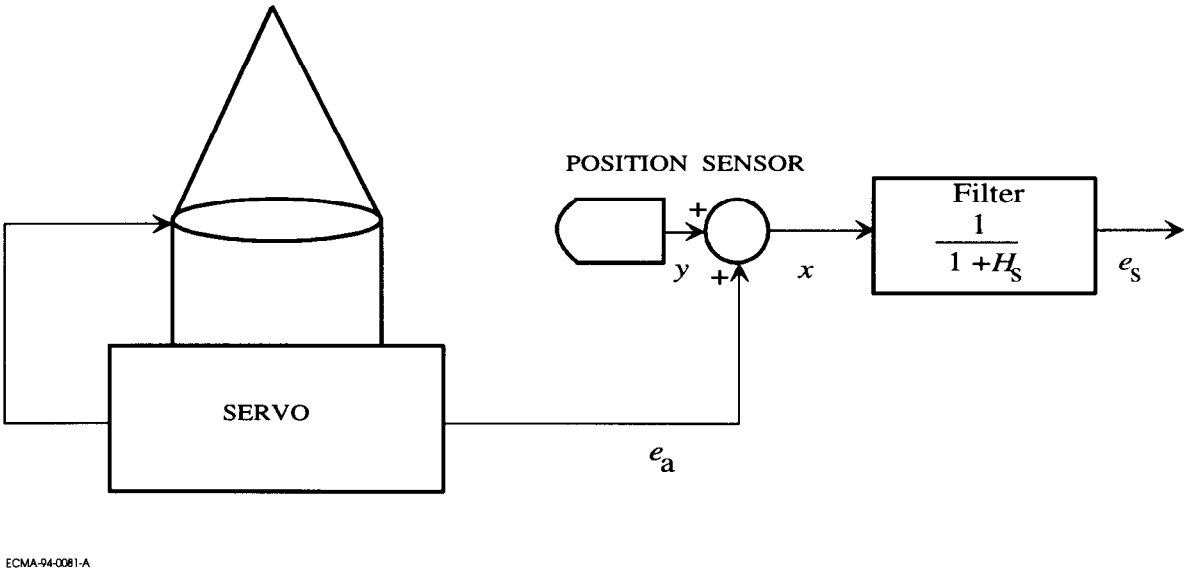

Figure C.2 - Implementation of a reference servo by filtering the track position signal with the reduction characteristics of the reference servo

Copyright International Organization for Standardization
Provided by IHS under license with ISO
No reproduction or networking permitted without license from IHS
Not for Resale

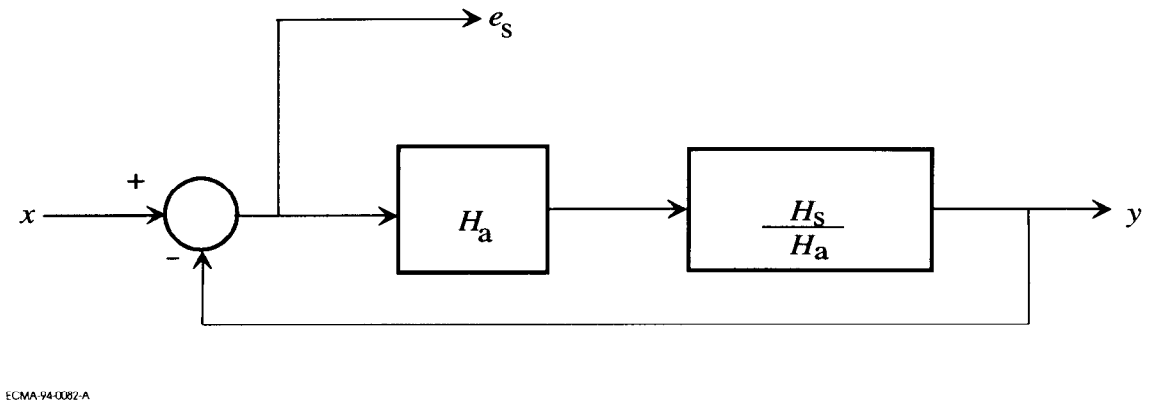

Figure C.3 - Implementation of a reference servo by changing the transfer function of the actual servo

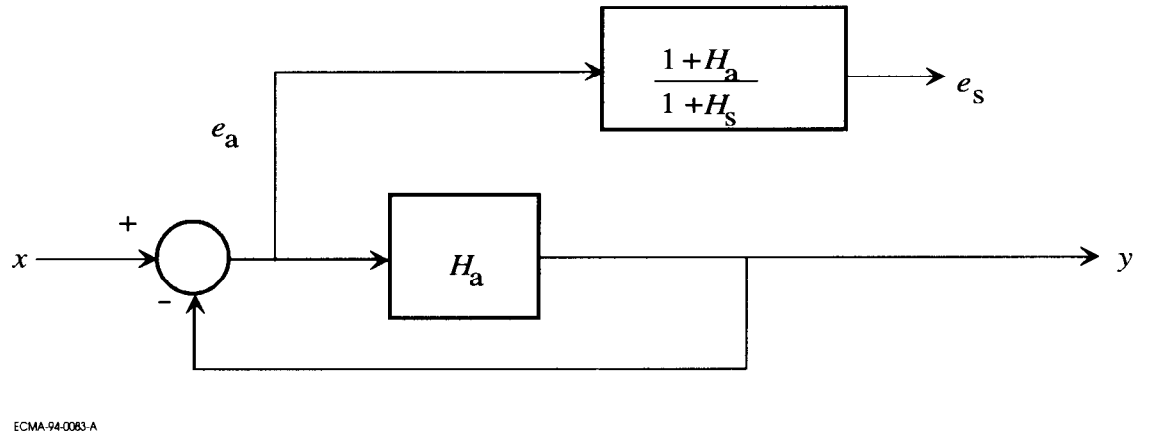

Figure C.4 - Implementation of a reference servo by changing the tracking error of the actual servo

The optimum implementation depends on the characteristics of H_a and H_s. Good results for motors in leaf springs are often obtained by using separate circuits in a low and high frequency channel. The implementation of figure C.2 is used in the low-frequency channel, while that of figures C.3 and C.4 is used in the high-frequency channel. The signals from both channels are added with a reversed cross-over filter to get the required tracking error. In the low-frequency channel one can also use the current through the motor as a measure of the acceleration of the motor, provided the latter is free from hysteresis. The current must be corrected for the transfer function of the motor and then be converted to a tracking error with a filter with a transfer function (*e/a*), equivalent to eq.(4).

Copyright International Organization for Standardization
Provided by IHS under license with ISO
No reproduction or networking permitted without license from IHS
Not for Resale

Annex D
(normative)

CRC for Address fields

The 16 check bits of the CRC of the Address field shall be computed over the first four bytes of this field. The generator polynomial shall be:

$$G(x) = x^{16} + x^{12} + x^5 + 1.$$

The residual polynomial is defined by:

$$R(x) = \left(\sum_{i=16}^{i=31} b_i x^i + \sum_{i=0}^{i=15} \overline{b_i} \right) x^{16} \bmod G(x),$$

where b_i denotes a bit of the first four bytes and $\overline{b_i}$ an inverted bit. Bit b_{31} is the highest order bit of the first byte.

The contents of the 16 check bits c_k of the CRC are defined by:

$$R_c(x) = \sum_{k=0}^{k=15} c_k x^k.$$

c_{15} is recorded in the highest order bit of the fifth byte in the Address field.

Copyright International Organization for Standardization
Provided by IHS under license with ISO
No reproduction or networking permitted without license from IHS Not for Resale

Annex E
(normative)

Interleave, CRC,ECC and Resync for the Data fields of a sector

E.1 Contents of Data field

The bytes in the Data field constitute an ordered sequence A_n. The elements of A_n are, depending on the value of n:

for	1	$\leq n \leq$ 1024:	$A_n = D_n$	user data bytes
	1025	$\leq n \leq$ 1026:	$A_n = AD_m$	address data bytes
	1027	$\leq n \leq$ 1030:	$A_n = C_k$	CRC check bytes
	1031	$\leq n \leq$ 1190:	$A_n = E_{st}$	ECC check bytes,

where

$$m = n - 1024$$

$$k = n - 1026$$

$$s = ((n - 1031) \bmod 10) + 1$$

$$t = \text{int}\left(\frac{n - 1031}{10}\right) + 1$$

The notation int(x) denotes the largest integer not greater than x; (x mod y) denotes the remainder of the integer division x / y.

The order of the user data bytes D_n is the same as the order in which they are input into the controller of the drive, i.e. D_1 comes first. The Resync bytes are not included in A_n.

E.2 Interleaving

Before the ECC and CRC bytes are calculated, the bytes in the Data field are ten-way interleaved. For that purpose, the first three sub-groups of A_n are mapped onto a two-dimensional matrix B_{ij} with 103 rows and 10 columns (see figure E.1). Thus

$$\text{for } 1 \leq n \leq 1030: \quad B_{ij} = A,$$

where

$$i = 102 - \text{int}\left(\frac{n - 1}{10}\right)$$

$$j = (n - 1) \bmod 10 .$$

Copyright International Organization for Standardization
Provided by IHS under license with ISO
No reproduction or networking permitted without license from IHS
Not for Resale

E.3 CRC and ECC

E.3.1 General

The CRC and ECC shall be computed over the Galois field based on the primitive polynomial

$$G_p(x) = x^8 + x^5 + x^3 + x^2 + 1 .$$

The elements of the field are $\alpha^i = (ß^i)^{88}$, where ß is a primitive root of $G_p(x)$. The value of the n-th bit in a byte is the coefficient of the n-th power of ß, where $0 \leq n \leq 7$, when ß is expressed on a polynomial basis.

E.3.2 CRC

The generator polynomial for the CRC bytes shall be

$$G_c(x) = \prod_{i=136}^{i=139} (x + \alpha^i).$$

The four check bytes of the CRC shall be computed over the user data and the address data bytes. The information polynomial shall be

$$I_c(x) = \left(\sum_{i=1}^{i=102} \left(\sum_{j=0}^{j=9} B_{ij}\, x^i \right) \right) + B_{0,0} x^0.$$

The contents of the four check bytes C_k of the CRC are defined by the residual polynomial

$$R_c(x) = I_c(x)\, x^4 \mod G_c(x).$$

The storage locations for the coefficients of the polynomial are specified by

$$R_c(x) = \sum_{k=1}^{k=4} C_k\, x^{4-k} .$$

E.3.3 ECC

The primitive polynomial and the elements shall be as specified in E3.1. The generator polynomial for the check bytes of the ECC shall be

$$G_e(x) = \prod_{i=120}^{i=135} (x + \alpha^i) .$$

Copyright International Organization for Standardization
Provided by IHS under license with ISO
No reproduction or networking permitted without license from IHS Not for Resale

The 160 check bytes of the ECC shall be computed over the user data, the address bytes and the CRC bytes. The corresponding ten information polynomials shall be

$$I_{ej}(x) = \sum_{i=0}^{i=102} B_{ij}\, x^{i}$$

where $0 \leq j \leq 9$.

The contents of the 16 check bytes E_{st} for each polynomial $I_{ej}(x)$ are defined by the ten residual polynomials

$$R_{ej}(x) = I_{ej}(x)\, x^{16} \bmod G_e(x).$$

The storage locations for the coefficients of the polynomials are specified by

$$R_{ej}(x) = \sum_{t=1}^{t=16} \overline{E}_{j+1,t}\, x^{16-t}.$$

The bits of the computed check bytes shall be inverted before they are encoded into Channel bits, as indicated by the use of $\overline{E}$ in the above formula and E in figure E.1.

E.4 Resync

The Resync fields shall be inserted in the Data field to prevent loss of byte synchronization and to limit the propagation of errors in the user data. Whilst they are numbered consecutively, all Resync fields are identical. They contain the following pattern in Channel bit pattern corresponding to the following hexadecimal data in RLL(1,7) conversion:

C5.

The Resync field RS_n shall be inserted between bytes A_{20n} and A_{20n+1}, where $1 \leq n \leq 59$.

E.5 Recording sequence

The bytes of the Data field shall be recorded on the disk immediately after the Sync field. Their order shall be according to the sequence A_n with the Resync bytes inserted as specified in E.4.

Figure E.1 shows in matrix form the arrangement of the bytes. The sequence of recording is from left to right and top to bottom. The first three bytes SB_1, SB_2 and SB_3 form the Data Sync field, which precedes the Data field. The first 103 rows of the Data field contain the user data bytes, the address data bytes and the CRC check bytes. The last 16 rows contain the ECC check bytes.

Copyright International Organization for Standardization
Provided by IHS under license with ISO
No reproduction or networking permitted without license from IHS Not for Resale

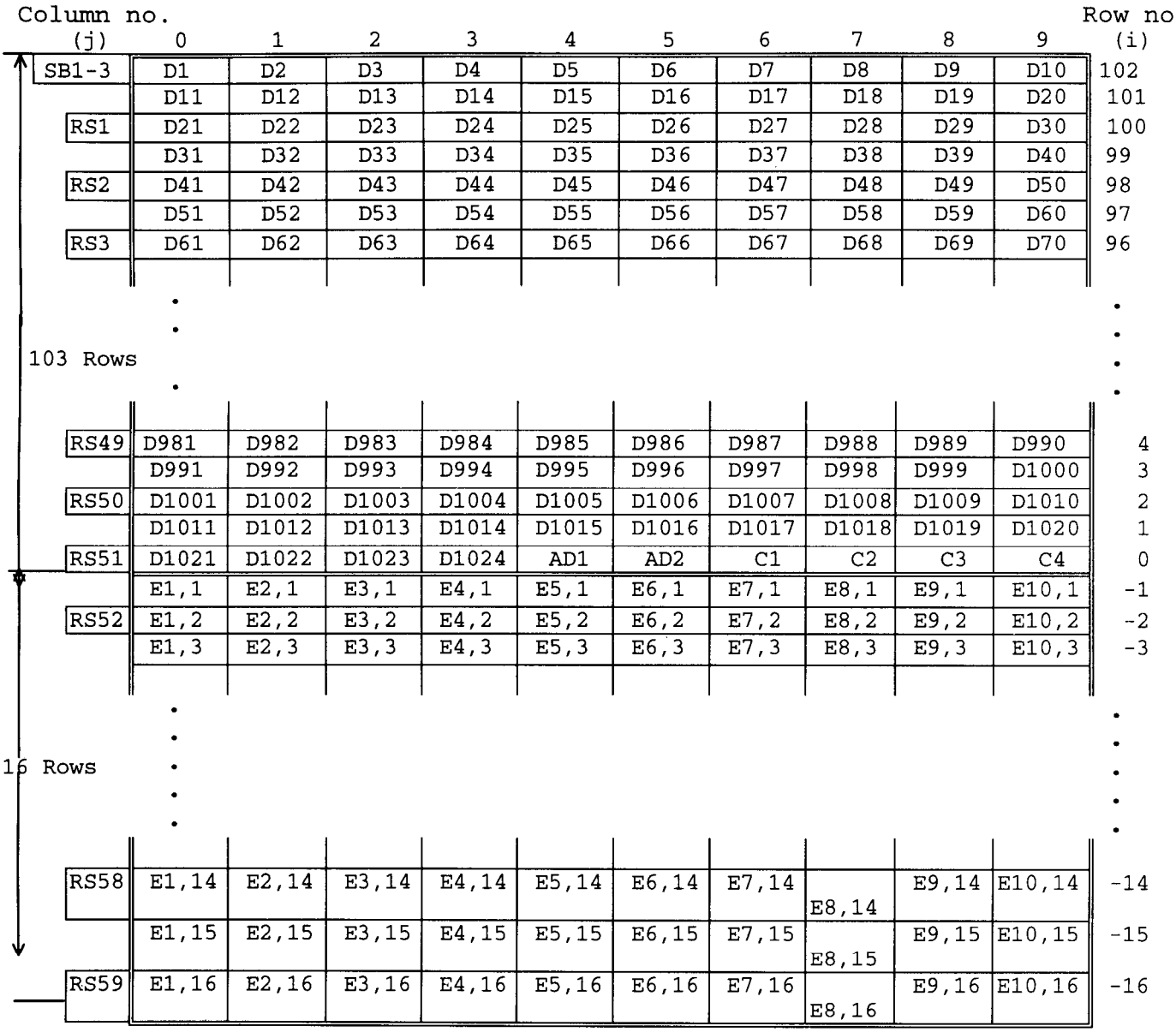

Figure E.1 - Data field configuration. The indices i and j of bytes B_{ij} are given along the sides of the matrix.

Copyright International Organization for Standardization
Provided by IHS under license with ISO
No reproduction or networking permitted without license from IHS
Not for Resale

Annex F
(normative)

PEP Control zone

F.1 Recording in the PEP Control zone

In the PEP zone there shall be 1086 to 1166 PEP bit cells per revolution. A PEP bit is recorded by writing marks in either the first or the second half of the cell.

The angular length of mark shall be 360°/656 244 to 360°/610 986.

A ZERO shall be represented by a change from marks to no marks at the centre of the cell and a ONE by a change from no marks to marks at this centre.

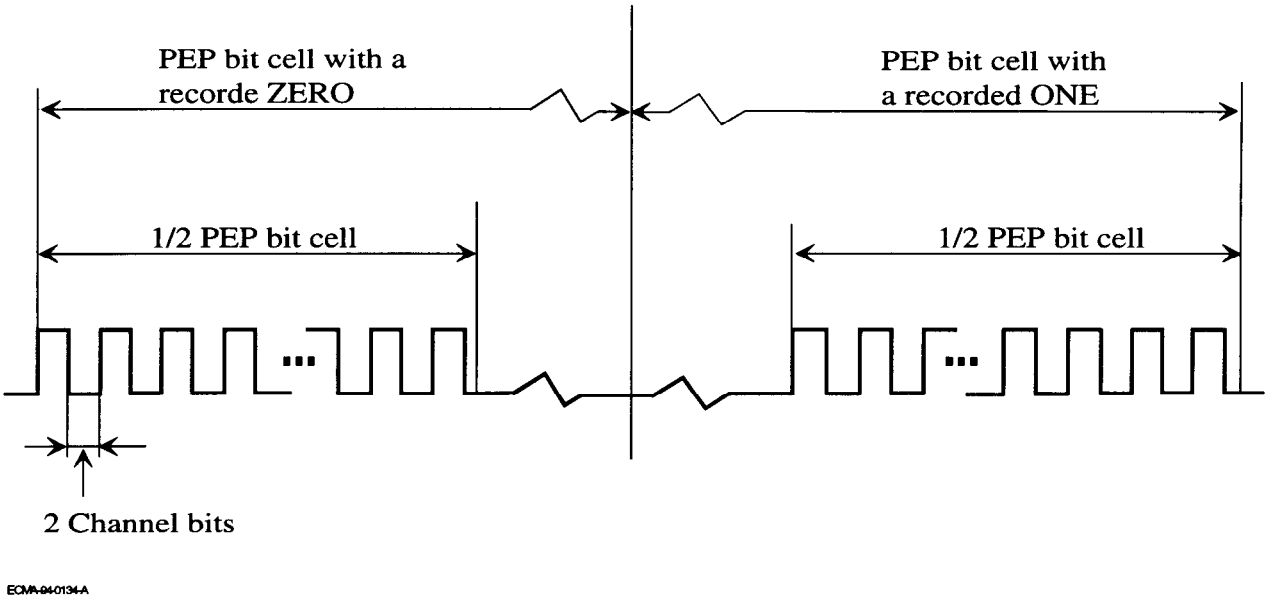

Figure F.1 - Example of phase-encoded modulation in the PEP Control zone

Copyright International Organization for Standardization
Provided by IHS under license with ISO
No reproduction or networking permitted without license from IHS Not for Resale

F.2 Format of the tracks of the PEP Control zone

Each track in the PEP zone shall have three sectors as shown in figure F2. The numbers below the fields indicate the number of PEP bits in each field.

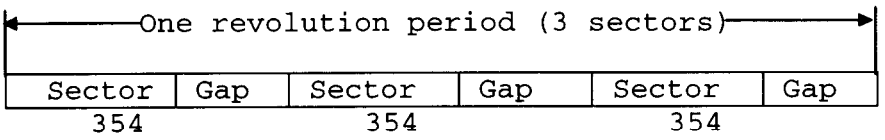

Figure F.2 -Track format in the PEP Control Zone

The gaps between sectors shall be unrecorded areas having a length corresponding to 8 to 35 PEP bits.

F.3 Format of a sector of the PEP Control Zone

Each sector of 354 PEP bits shall have the following layout. The former half shall be recorded in normal way and the latter half shall be recorded in reverse way so as to be read with reverse direction of rotation.

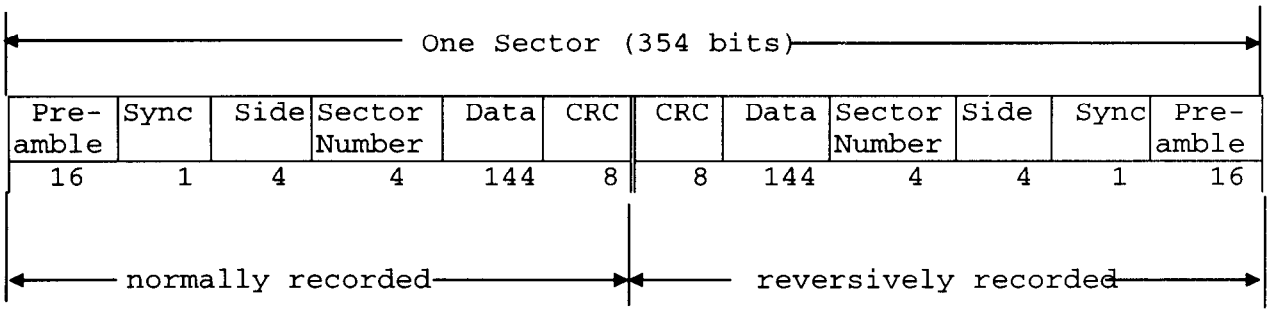

Figure F.3 -Sector format in the PEP Control zone

F.3.1 Preamble field

This field shall consist of 16 ZERO bits.

F.3.2 Sync field

This field shall consist of 1 ONE bit.

F.3.3 Side field

This field shall consist of four bits specifying whether the medium surface being read out is side A or side B. The allowed settings of these four bits shall be:

0000 : side A
0001 : side B

Copyright International Organization for Standardization
Provided by IHS under license with ISO
No reproduction or networking permitted without license from IHS Not for Resale

F.3.4 Sector Number field

This field shall consist of four bits specifying in binary notation the sector number from 0 to 2.

F.3.5 Data field

This field shall comprise 18 8-bit bytes numbered 0 to 17. These bytes shall specify the following.

Byte 0: Media Configuration 1

Bit 76 543 210	
xxxxx001	(1,7) RLL Recording Code
xxxx1xxx	Mark Edge Recording
x010xxxx	Modified Constant Angular Velocity (MCAV) Rotational Recording Mode
0xxxxxxx	Continuous Composite Servo tracking
1xxxxxxx	Sampled Servo tracking

Byte 1: Media Configuration 2

Bit 76 543 210	
xxxxx010	Number of user bytes per sector. (1024 bytes) Binary equivalent of "n" in the expression 256*2n used to describe the number of user bytes per sector.
xxxx0xxx	Reserved
x000xxxx	Reed-Solomon Long Distance Error Correction code of degree 16 with a 10-way interleave
0xxxxxxx	Reserved

Byte 2: Sectors per Track

This byte shall be set to 11111111, indicating that it is not used.

Byte 3: Base line reflectance

This byte shall specify the disk manufacturer's specification of the base line reflectance R of the disk, expressed as a fraction, when measured at a nominal wavelength of 780 nm. It is specified as a number n such that

$$n = 100\,R.$$

Byte 4: Signal Amplitude and Polarity for Pre-formatted data

Bit 76 543 210

xnnnnnnn An absolute, signed number representing the signal amplitude and polarity of the pre-formatted marks given as a number n, such that

$$n = 50(I_p/I_o)$$

where I_p is the signal from the low frequency pre-formatted marks and I_o is the signal from an unrecorded, ungrooved area. If Bit 6 is set to ZERO, this number is positive and it indicates low-to-high recording. If Bit 6 is set to ONE, this number is negative and expressed by Bit 5 to 0 in TWO's complement and it indicates high-to-low recording.

0xxxxxxx Land Recording

Copyright International Organization for Standardization
Provided by IHS under license with ISO
No reproduction or networking permitted without license from IHS Not for Resale

Byte 5: Signal Amplitude and Polarity for User Recorded Data

Bit 76 543 210

nnnnnnnn An absolute, signed number representing the signal amplitude and polarity of the user recorded marks given as a number n, such that

$$n = 25(I_u/I_{ot})$$

where I_u is the signal of the low frequency user recorded marks and I_{ot} is the on-track signal from an unrecorded track. If Bit 7 is set to ZERO, this number is positive and it indicates low-to-high recording. If Bit 7 is set to ONE, this number is negative and expressed by Bit 6 to 0 in TWO's complement and it indicates high-to-low recording.

Byte 6: Maximum read power

This byte shall specify the maximum permitted read power in mW in the Information zone, at a wavelength of 780 nm and a rotational frequency of the disk of 25 Hz. It is specified as a number n such that

$$n = 20\ P_w$$

Byte 7: Media type

This byte shall be set to 00010000, indicating Write-Once optical disk cartridge.

Byte 8: Last track in the Data zone (MSB)
Byte 9: Last track in the Data zone
Byte 10: Last track in the Data zone (LSB)

These bytes shall be set to 00000000 11010001 01000011, indicating the track number of the last track in the Data zone, i.e. 53 571.

Byte 11: Generation Code

This byte shall be set to 00000000, indicating this International Standard is the first generation standard of 300 mm Write-Once optical disk cartridge.

Byte 12,13: Reserved

These bytes shall be set to (FF).

Byte 14 to 17: Unspecified

These bytes may be used for manufacturer identification. They shall be ignored in interchange.

F.3.6 CRC

The eight bits of the CRC shall be computed over the Side field, the Sector Number field and the Data field of the PEP sector.

The generator polynomial shall be

$$G(x) = x^8 + x^4 + x^3 + x^2 + 1$$

Copyright International Organization for Standardization
Provided by IHS under license with ISO
No reproduction or networking permitted without license from IHS Not for Resale

The residual polynomial is defined by:

$$R(x) = \left(\sum_{i=144}^{i=151} b_i x^i + \sum_{i=0}^{i=143} \overline{b_i} x^i \right) x^8 \bmod G(x),$$

where b_i denotes a bit of the first one bytes and $\overline{b}_i$ an inverted bit. Bit b_{151} is the highest order bit of the Side field.

The contents of the 8 check bits c_k of the CRC are defined by

$$R_c(x) = \sum_{k=0}^{k=7} c_k x^k.$$

c_7 is recorded in the highest order bit of the CRC byte of the PEP sector.

Copyright International Organization for Standardization
Provided by IHS under license with ISO
No reproduction or networking permitted without license from IHS Not for Resale

Annex G
(normative)

Control data of the SFP

Each Sector in the two SFP Control zones shall contain the same Control data provided by the manufacturer of the media. The Control data can be divided into four groups in the following way.

1 A duplicate of the PEP information

2 Media information

3 System information

4 Unspecified data

Optional bytes shall either contain the prescribed data or shall be set to (FF).

G.1 Duplicate of the PEP information

Byte 0 to 17 shall be identical with the 18 bytes of the Data field of a sector of the PEP zone (see annex F).

G.2 Media information

Byte 18: Wavelength

This byte shall specify the wavelength L_1, in nanometres, of the drive as a number n such that

$$n = 1/5\ L_1.$$

This byte shall be set to $n = 156$.

Byte 19: Reflectance

This byte shall specify the reflectance R_1 of the disk measured at wavelength L_1 as a number n such that

$$n = 100\ R_1.$$

Byte 20: Linear Velocity

This byte shall specify the linear velocity V_1 in metres/sec of the disk as a number n such that

$$n = 5\ V_1.$$

This byte shall be set to $n = 39$.

Byte 21: Maximum read power

This byte shall specify the maximum read power P_1 in mW in the Information zone under condition L_1 and V_1, expressed as a number n such that

Copyright International Organization for Standardization
Provided by IHS under license with ISO
No reproduction or networking permitted without license from IHS Not for Resale

$n = 20\ P_l$.

Byte 22 to 29: Write power and write pulse width compensatio at DC write

Bytes 22 to 30 shall specify the write powers P_w in mW and the write pulse width compensation T_c in persent to the Channel bit length T for four values of a write pulse width T_w, under condition L_l and V_l. Pw is expressed as a number n such that

$n = 5\ P_w$.

T_c is expressed as a number n such that

$n = T_c$

Byte 22: Write power P_w at $T_w = 2T$
Byte 23: Write pulse width compensation T_c at $T_w = 2T$

Byte 24: Write power Pw at $T_w = 3T$
Byte 25: Write pulse width compensation T_c at $T_w = 3T$

Byte 26: Write power P_w at $T_w = 4T$
Byte 27: Write pulse width compensation T_c at $T_w = 4T$

Byte 28: Write power P_w at $T_w = 8T$
Byte 29: Write pulse width compensation T_c at $T_w = 8T$

Byte 30: Write power at pulse train write

Byte 30 shall specify the write power in mW under condition L_l and V_l. P_w is expressed as a number n such that

$n = 5\ P_w$.

Byte 31 to 32: Write pulse width and write pulse pitch at pulse train write

Byte 31 and 32 shall specify the write pulse width T_t in persent to the Channel bit length T and the write pulse pitch T_p in persent to the Channel bit length T under condition L_l and V_l.
T_t is expressed as a number n such that

$n = T_t$

T_p is expressed as a number n such that

$n = T_p$

Byte 31: Write pulse width
Byte 32: Write pulse pitch

Copyright International Organization for Standardization
Provided by IHS under license with ISO
No reproduction or networking permitted without license from IHS Not for Resale

Byte 33: Reserved

This byte shall be set to (FF).

Byte 34: Linear velocity

This byte shall specify the linear velocity V_2 in metres/sec of the disk, expressed in the same way as V_1 in Byte 20.

This byte shall be set to $n = 51$.

Byte 35 to 47

These bytes shall specify the same parameters as in Bytes 21 to 33, but under the condition L_1 and V_2.

Byte 48: Linear velocity

This byte shall specify the linear velocity V_3 in metres/sec of the disk, expressed in the same way as V_1 in Byte 20.

This byte shall be set to $n = 66$.

Byte 49 to 61

These bytes shall specify the same parameters as in Bytes 21 to 33, but under the condition L_1 and V_3.

Byte 62: Linear velocity

This byte shall specify the linear velocity V_4 in metres/sec of the disk, expressed in the same way as V_1 in Byte 20.

This byte shall be set to $n = 86$.

Byte 63 to 75

These bytes shall specify the same parameters as in Bytes 21 to 33, but under the condition L_1 and V_4.

Byte 76: Linear velocity

This byte shall specify the linear velocity V_5 in metres/sec of the disk, expressed in the same way as V_1 in Byte 20.

This byte shall be set to $n = 112$.

Byte 77 to 89

These bytes shall specify the same parameters as in Bytes 21 to 33, but under the condition L_1 and V_5.

Byte 90: Linear velocity

This byte shall specify the linear velocity V_6 in metres/sec of the disk, expressed in the same way as V_1 in Byte 20.

This byte shall be set to $n = 145$.

Copyright International Organization for Standardization
Provided by IHS under license with ISO
No reproduction or networking permitted without license from IHS Not for Resale

Byte 91 to 103

These bytes shall specify the same parameters as in Bytes 21 to 33, but under the condition L_1 and V_6.

Byte 104: Linear velocity

This byte shall specify the linear velocity V_7 in metres/sec of the disk, expressed in the same way as V_1 in Byte 20.

Byte 105 to 117

These bytes shall specify the same parameters as in Bytes 21 to 33, but under the condition L_1 and L_7.

Byte 118: Linear velocity

This byte shall specify the linear velocity V_8 in metres/sec of the disk, expressed in the same way as V_1 in Byte 20.

Byte 119 to 131

These bytes shall specify the same parameters as in Bytes 21 to 33, but under the condition L_1 and V_8.

Byte 132: Wavelength

This byte shall specify the wavelength L_2, in nanometres, of the drive as number n such that

$$n = 1/5\ L_2.$$

This byte shall be set to $n = 134$.

Byte 133 to 245

These bytes shall specify the same parameters as in bytes 19 to 131, but under the condition L_2.

Byte 246: Wavelength

This byte shall specify the wavelength L_3, in nanometres, of the drive expressed in the same way as L_1 in Byte 18.

Byte 247 to 359

These bytes shall specify the same parameters as in bytes 19 to 131, but under the condition L_3.

Byte 360 to 379: Reserved

These bytes shall be set to (FF).

Copyright International Organization for Standardization
Provided by IHS under license with ISO
No reproduction or networking permitted without license from IHS Not for Resale

G.3 System information

Byte 380 to 471: Reserved

These bytes shall be set to (FF).

Byte 472: Write strategy

The allowed settings of this byte shall be:

0000 0001 : only DC write is allowed
0000 0010 : only pulse train write is allowed
0000 0011 : both DC write and pulse train write are allowed

Byte 473 to 479: Reserved

These bytes shall be set to (FF).

G.4 Unspecified data

Byte 480 to 1023

The contents of these bytes are not specified in this International Standard. They may contain an identification of the manufacturer. They shall be ignored in interchange.

Copyright International Organization for Standardization
Provided by IHS under license with ISO
No reproduction or networking permitted without license from IHS Not for Resale

Annex H
(informative)

Guidelines for sector replacement

Clause 19 assumes that a sector is defective and will be replaced by the defect management when any of the following conditions exist:

a) A sector has two or three Address fields with an error detected by the CRC check;

b) A column in the Data field (See figure E.1.) contains more than three defective bytes A_n.

--`,,```,,,,````-`-`,,`,,`,`,,`---
Copyright International Organization for Standardization
Provided by IHS under license with ISO
No reproduction or networking permitted without license from IHS
Not for Resale

Annex J
(normative)

Test method for the holding characteristics of the disk

J.1 The purpose of this test is to determine the magnetic characteristics of the magnetizable material of the hub.

J.2 The test device (See figure K.1.) consists of a spacer, a magnet, a back yoke and a centre shaft. The dimensions of test device are as follows:

D_d = 47,0 mm ± 0,1 mm
D_e = 60,0 mm ± 0,1 mm
D_f = 73,0 mm max.
D_g = 34,0 mm + 0,0 mm/- 0,1 mm
H_c = 0,4 mm ± 0,01 mm
H_d = 1,0 mm ± 0,05 mm

J.3 The material of the test device shall be :

Magnet	: Sm-Co
Back yoke	: Any suitable magnetizable material
Spacer	: Non-magnetizable material or air gap
Centre shaft	: Non-magnetizable material

J.4 The characteristics of the magnet with back yoke are as follows:

Number of poles : 4
Maximum energy product ($BH_{max.}$) : 175 kJ/m^3 ± 16 kJ/m^3

The characteristics of the magnet with back yoke shall be adjusted by the use of a pure nickel plate with the following dimensions (see figure K.2), and the adsorbent force of this plate at the point of

H_c = 0,4 mm ± 0,01 mm

when spaced from the magnet surface shall be 5 N +2,0 N / -0,0 N.

D_h = 37,0 mm ± 0,1 mm
D_i = 54,0 mm ± 0,1 mm
H_e = 1,0 mm ± 0,05 mm.

The test condition for temperature shall be as specified in 8.1.1.

Copyright International Organization for Standardization
Provided by IHS under license with ISO
No reproduction or networking permitted without license from IHS Not for Resale

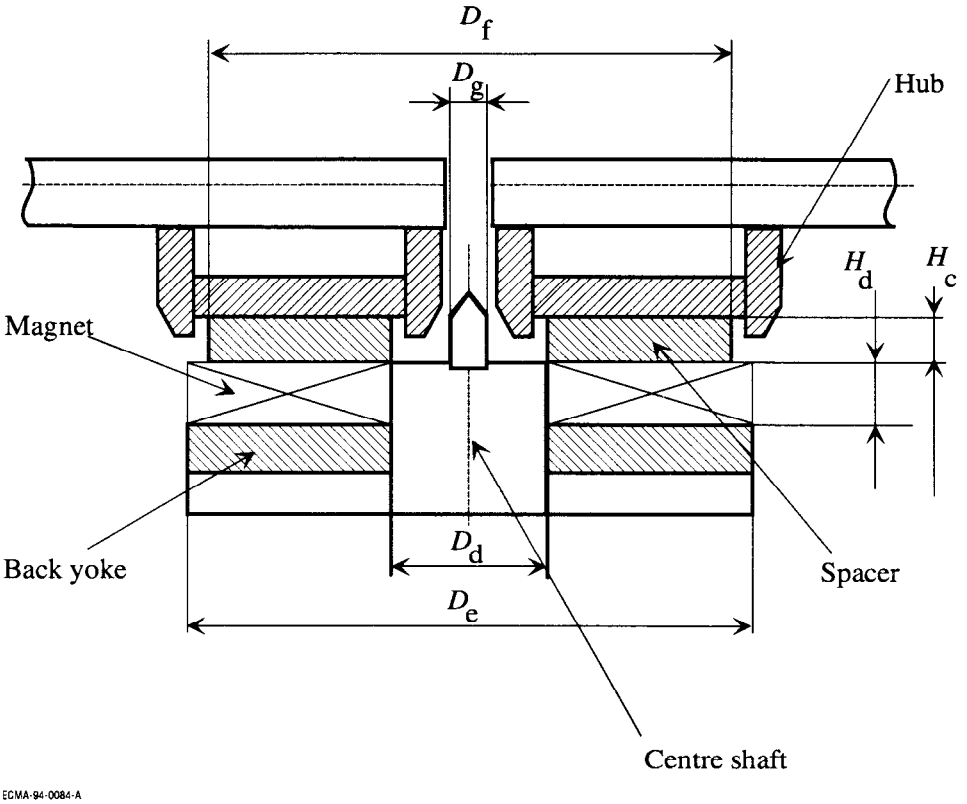

Figure J.1 - Test Device for the clamping characteristics of the hub

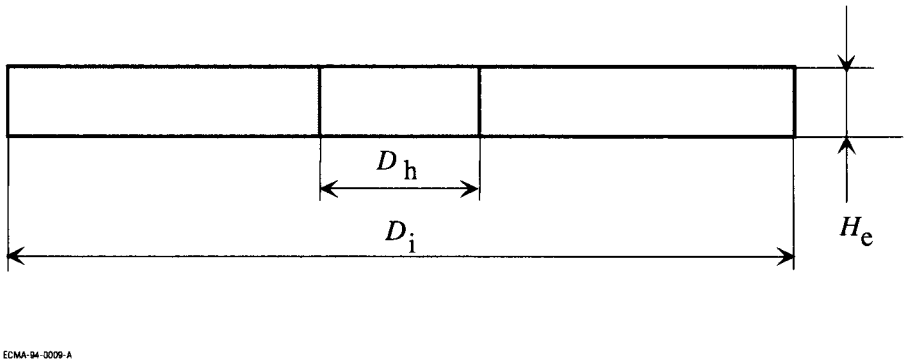

Figure J.2 - Calibration plate of the test device

Copyright International Organization for Standardization
Provided by IHS under license with ISO
No reproduction or networking permitted without license from IHS
Not for Resale

Annex K
(informative)

Derivation of the operating climatic environment for the ODC

This annex gives some background on how some of the conditions of the operating environment in clause 8.1.2 have been derived.

K.1 Standard climatic environment classes

The conditions of the ODC operating environment are, with a few exceptions mentioned below, based on parameter values of the IEC standard climatic environment class 3K3 described in IEC publication 721-3-3. This publication defines environmental classes for stationary use of equipment at weather-protected locations.

The IEC class 3K3 refers to climatic conditions which

> "... may be found in normal living or working areas, e.g. living rooms, rooms for general use (theatres, restaurants, etc.), offices, shops, workshops for electronic assemblies and other electrotechnical products, telecommunication centres, storage rooms for valuable and sensitive products."

K.2 Overtemperature considerations

While IEC class 3K3 defines the limits for the room climate only, the ODC operating environment specification in this International Standard takes into consideration also system and drive overtemperature. This means that when inserted in a drive, the ODC will sense a temperature which is above the ambient room temperature. The figures in the operating environment specification have been calculated from the assumption that this overtemperature may be up to 20 °C.

K.3 Absolute humidity

The introduction of the parameter

absolute humidity [unit: g water / m^3 of air]

is very useful when studying overtemperature. When the temperature rises inside a drive, the relative humidity goes down but the absolute humidity remains substantially constant. S_o, making room for overtemperature in the operating environment specification affects not only the upper temperature limit but also the lower relative humidity limit. The relationship between these parameters is shown in the climatogram (the RH vs temperature map) of the ODC operating environment, figure K.1.

The absolute humidity restrictions influence the operating environment in the following two ways:

i) Combinations of high temperatures and high relative humidities are excluded. Such combinations could have negative influence on the performance and the life of ODCs.

ii) Combinations of low temperatures and low relative humidities are excluded. Such combinations are very unlikely to occur in world-wide normal office environments.

K.4 Deviations from the IEC standard environment class

Apart from the changes introduced by the overtemperature considerations mentioned above, there are a few more parameter values which are not based on IEC class 3K3. These are:

Copyright International Organization for Standardization
Provided by IHS under license with ISO
No reproduction or networking permitted without license from IHS Not for Resale

- Atmospheric pressure

  The IEC 3K3 lower limit of 70 kPa has been limited at 65 kPa.

- Maximum Temperature

  The maximum temperature around the ODC, i.e. room temperature plus overtemperature, has been limited to 50 °C (while IEC 3K3 + 20 °C would have become 60 °C). For ODCs according to this International Standard, however, the 50 °C limit is considered to be a physical limit above which operation (as well as storage) is not safe.

  This means that equipment designers may want to ensure adequate cooling inside the drive especially when the room temperature approaches the upper IEC 3K3 limit of 40 °C.

- Temperature and Humidity

  Because of the largeness of the disk and the case, to avoid too large deformations, the ranges of IEC class 3K3 have further been reduced:
  Lower temperature is 10 °C instead of 5 °C, maximum absolute humidity is 25 g/m^3 instead of 30 g/m^3 and the rates of change (the gradients) of temperature and relative humidity are not according to IEC 3K3.

K.5 Wet bulb temperature specifications

Instead of specifying limits for the absolute humidity, earlier standards for ODCs as well as those for other digital data storage media often use restrictions of the parameter

wet bulb temperature [unit: °C]

in order to avoid too severe combinations of high temperatures and high relative humidities.
In order to facilitate comparisons between different specifications, figure K.2 shows wet bulb temperatures of interest for the ODC operating environment, as well as for the testing and storage environments. Since wet bulb temperatures vary slightly with the atmospheric pressure, the diagram is valid for the normal pressure of 101,3 kPa.

Copyright International Organization for Standardization
Provided by IHS under license with ISO
No reproduction or networking permitted without license from IHS Not for Resale

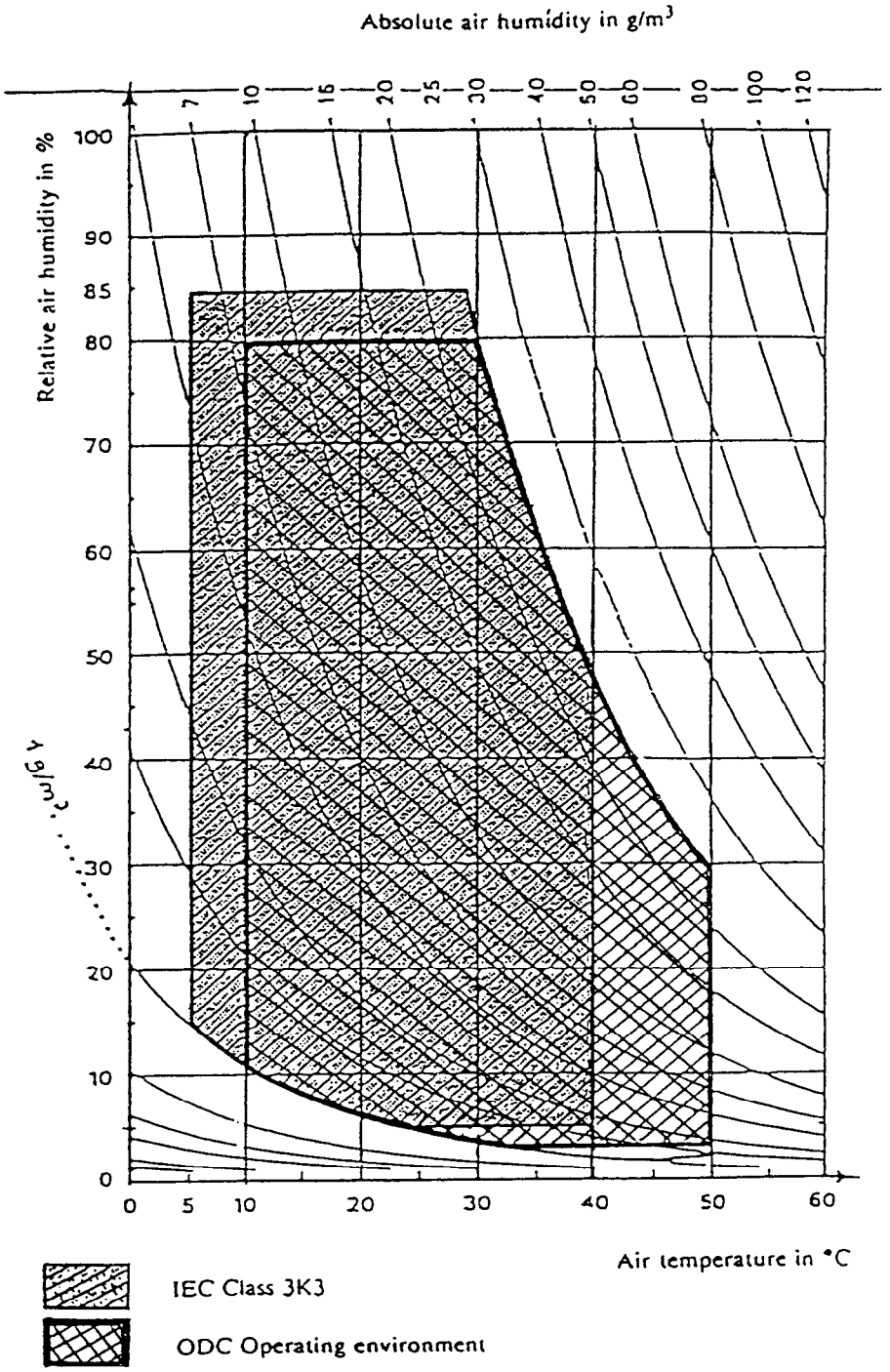

Figure K.1 - Climatogram of IEC Class 3K3 and the ODC operating environment

Copyright International Organization for Standardization
Provided by IHS under license with ISO
No reproduction or networking permitted without license from IHS
Not for Resale

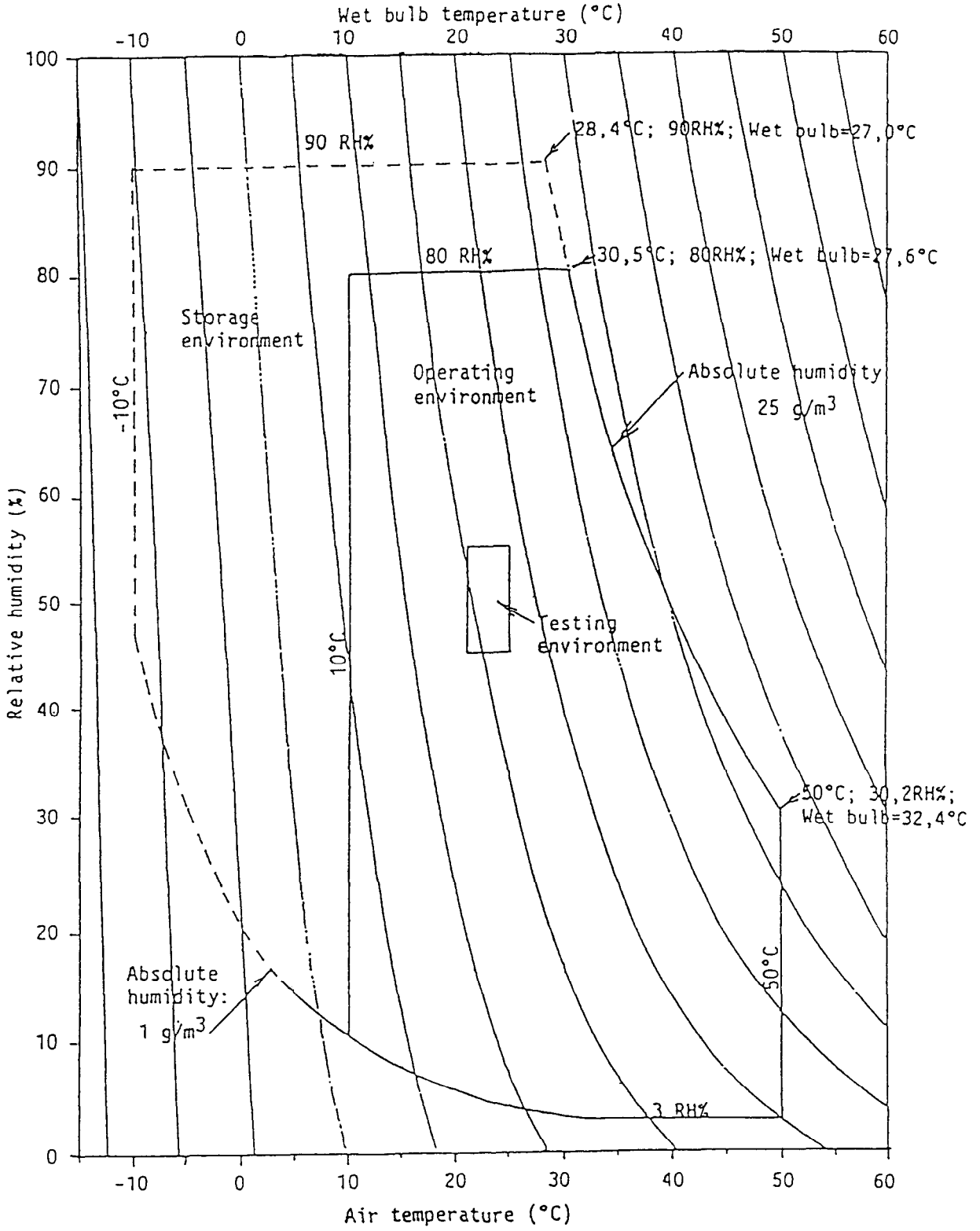

Figure K.2 - Wet bulb temperatures of the operating and storage environments

Copyright International Organization for Standardization
Provided by IHS under license with ISO
No reproduction or networking permitted without license from IHS
Not for Resale

Annex L
(informative)

Description of the office environment

Due to their construction and mode of operation optical disk cartridges have considerable resistance to the effects of dust particles around and inside the disk drive. Consequently it is not generally necessary to take special precaution to maintain a sufficiently low consentration of dust particles.

Operation in heavy consentrations of dust should be avoided, e.g. in a machine shop or on a building site.

Office environment implies an environment in which personnel may spend a full working day without protection and without suffering temporary or permanent discomfort.

Copyright International Organization for Standardization
Provided by IHS under license with ISO
No reproduction or networking permitted without license from IHS Not for Resale

Annex M
(informative)

Transportation guidelines

M.1 As transportation occurs under a wide range of temperature and humidity variations, for differing periods, by many methods of transport and in all parts of the world it is not possible to specify conditions for transportation or for packaging.

M.2 The form of packaging should be agreed between sender and recipient or, in the absence of such agreement, is the responsibility of the sender. It should take account of the following hazards.

M.2.1 Temperature and humidity

Insulation and wrapping should be designed to maintain the conditions for storage over the estimated period of transportation.

M.2.2 Impact loads and vibration

i) Avoid mechanical loads that would distort the shape of the cartridge.

ii) Avoid dropping the cartridge.

iii) Cartrdges should be packed in a rigid box containing adequate shock-absorbent material.

iv) The final box should have a clean interior and a construction that provides sealing to prevent the ingress of dirt and moisture.

Copyright International Organization for Standardization
Provided by IHS under license with ISO
No reproduction or networking permitted without license from IHS Not for Resale

Annex N
(informative)

Timing jitter measurement

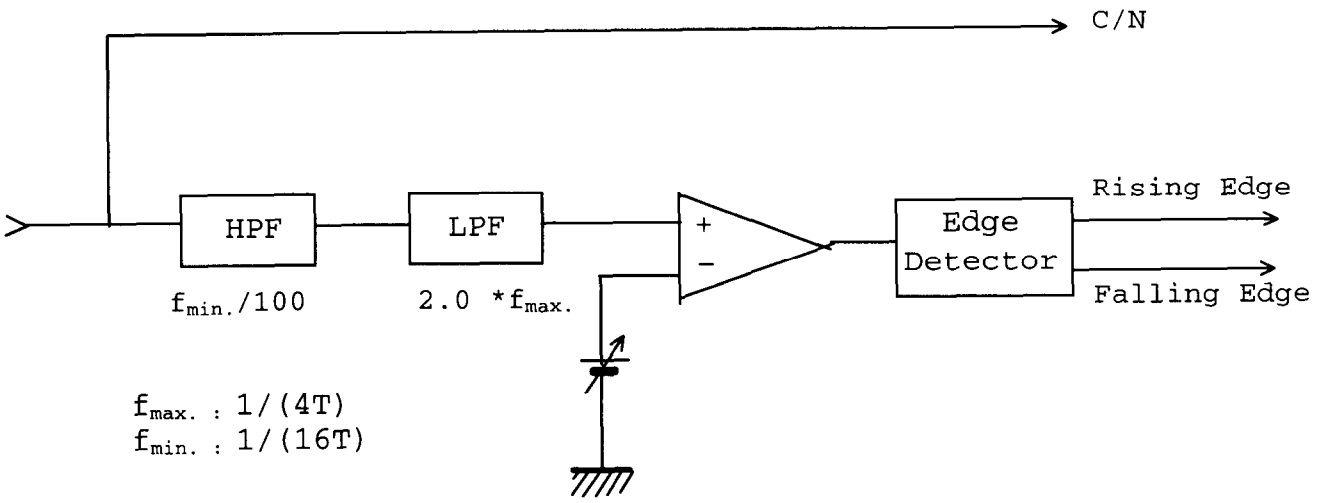

Figure N.1 - Read channel for C/N and Jitter measurement

Copyright International Organization for Standardization
Provided by IHS under license with ISO
No reproduction or networking permitted without license from IHS
Not for Resale

© ISO/IEC

ICS 35.220.30

Descriptors: data processing, information interchange, data recording, data recording devices, optical disks, CD-ROM, optical disk cartridges, specifications, dimensions, physical properties, mechanical properties, optical properties, track formats, tests, conformity tests, interchangeability.

Price based on 92 pages

Copyright International Organization for Standardization
Provided by IHS under license with ISO
No reproduction or networking permitted without license from IHS

Not for Resale