INTERNATIONAL STANDARD

ISO/IEC 13242

First edition
1997-06-15

Information technology — Telecommunications and information exchange between systems — Private Integrated Services Network — Specification, functional model and information flows — Route Restriction Class additional network feature

Technologies de l'information — Télécommunications et échange d'information entre systèmes — Réseau privé à intégration de services — Spécifications, modèle fonctionnel et débits d'informations — Caractéristique de réseau additionnelle de classe de restriction de route

Reference number
ISO/IEC 13242:1997(E)

Copyright International Organization for Standardization
Provided by IHS under license with ISO
No reproduction or networking permitted without license from IHS
Not for Resale

Contents

1 SCOPE **1**

2 CONFORMANCE **1**

3 NORMATIVE REFERENCES **1**

4 DEFINITIONS **2**

4.1 EXTERNAL DEFINITIONS 2

4.2 ADDITIONAL NETWORK FEATURE 2

4.3 CALL, BASIC CALL 2

4.4 ROUTE ACCESS CLASS (RAC) 2

4.5 FACILITY RESTRICTION CLASS (FRC) 2

4.6 FACILITY 3

5 LIST OF ACRONYMS **3**

6 ANF-RRC STAGE 1 SPECIFICATION **3**

6.1 DESCRIPTION 3

6.1.1 General description *3*

6.1.2 Qualifications on applicability to telecommunication services *3*

6.2 PROCEDURE 3

6.2.1 Provision/Withdrawal *3*

6.2.2 Normal procedures *4*

6.2.2.1 Activation/Deactivation/Registration/Interrogation 4

6.2.2.2 Invocation and operation 4

6.2.3 Exceptional procedures *4*

6.2.3.1 Activation/Deactivation/Registration/Interrogation 4

6.2.3.2 Invocation and operation 4

6.3 INTERACTION WITH OTHER SUPPLEMENTARY SERVICES AND ANFS 4

6.3.1 Calling Line Identification Presentation (SS-CLIP) *4*

6.3.2 Connected Line Identification Presentation (SS-COLP) *4*

6.3.3 Calling/connected Line Identification Restriction (SS-CLIR) *4*

6.3.4 Calling Name Identification Presentation (SS-CNIP) *4*

6.3.5 Connected Name Identification Presentation (SS-CONP) *4*

© ISO/IEC 1997

All rights reserved. Unless otherwise specified, no part of this publication may be reproduced or utilized in any form or by any means, electronic or mechanical, including photocopying and microfilm, without permission in writing from the publisher.

ISO/IEC Copyright Office • Case postale 56 • CH-1211 Genève 20 • Switzerland

Printed in Switzerland

Copyright International Organization for Standardization
Provided by IHS under license with ISO
No reproduction or networking permitted without license from IHS
Not for Resale

6.3.6 Calling/connected Name Identification Restriction (SS-CNIR) 4
6.3.7 Completion of Calls to Busy Subscriber (SS-CCBS) 4
6.3.8 Completion of Calls on No Reply (SS-CCNR) 5
6.3.9 Call Transfer (SS-CT) 5
6.3.10 Call Forwarding Unconditional (SS-CFU) 5
6.3.11 Call Forwarding Busy (SS-CFB) 5
6.3.12 Call Forwarding No Reply (SS-CFNR) 5
6.3.13 Call Deflection (SS-CD) 5
6.3.14 Path Replacement (ANF-PR) 5
6.3.15 Call Offer (SS-CO) 5
6.3.16 Call Intrusion (SS-CI) 5
6.3.17 Do Not Disturb (SS-DND) 5
6.3.18 Do Not Disturb Override (SS-DNDO) 5
6.4 INTERWORKING CONSIDERATIONS 5
6.5 OVERALL SDL 6

7. ANF-RRC STAGE 2 SPECIFICATION 6
7.1 FUNCTIONAL MODEL 6
7.1.1 Functional model description 6
7.1.2 Description of functional entities 7
7.1.2.1 RRC initiate, FE1 7
7.1.2.2 RRC execute, FE2 7
7.1.3 Relationship of functional model to basic call functional model 7
7.2 INFORMATION FLOWS 7
7.2.1 Definition of information flows 7
7.2.1.1 ra-RRC (Route Restriction Class) 8
7.2.2 Relationship of information flows to basic call information flows 8
7.2.3 Examples of information flow sequences 8
7.2.3.1 Normal operation of ANF-RRC 8
7.2.3.2 Unavailable appropriate outgoing facility 9
7.3 FUNCTIONAL ENTITY ACTIONS 9
7.3.1 Functional entity actions of FE1 9
7.3.2 Functional entity actions of FE2 9
7.4 FUNCTIONAL ENTITY BEHAVIOUR 9
7.4.1 Behaviour of FE1 10
7.4.2 Behaviour of FE2 11
7.5 ALLOCATION OF FUNCTIONAL ENTITIES TO PHYSICAL EQUIPMENT 12
7.6 INTERWORKING CONSIDERATIONS 12

ANNEX A 13

Copyright International Organization for Standardization
Provided by IHS under license with ISO
No reproduction or networking permitted without license from IHS Not for Resale

Foreword

ISO (the International Organization for Standardization) and IEC (the International Electrotechnical Commission) form the specialized system for worldwide standardization. National bodies that are members of ISO or IEC participate in the development of International Standards through technical committees established by the respective organization to deal with particular fields of technical activity. ISO and IEC technical committees collaborate in fields of mutual interest. Other international organizations, governmental and non-governmental, in liaison with ISO and IEC, also take part in the work.

In the field of information technology, ISO and IEC have established a joint technical committee, ISO/IEC JTC 1. Draft International Standards adopted by the joint technical committee are circulated to national bodies for voting. Publication as an International Standard requires approval by at least 75 % of the national bodies casting a vote.

International Standard ISO/IEC 13242 was prepared by Joint Technical Committee ISO/IEC JTC 1, *Information technology*, Subcommittee SC 6, *Telecommunications and information exchange between systems*.

Annex A of this International Standard is for information only.

Copyright International Organization for Standardization
Provided by IHS under license with ISO
No reproduction or networking permitted without license from IHS Not for Resale

Introduction

This International Standard is one of a series of Standards defining services and signalling protocols applicable to Private Integrated Services Networks (PISNs). The series uses ISDN concepts as developed by ITU-T and conforms to the framework of Standards for Open Systems Interconnection as defined by ISO/IEC.

This particular International Standard specifies the Route Restriction Class additional network feature.

Copyright International Organization for Standardization
Provided by IHS under license with ISO
No reproduction or networking permitted without license from IHS Not for Resale

Information technology — Telecommunications and information exchange between systems — Private Integrated Services Network — Specification, functional model and information flows — Route Restriction Class additional network feature

1 Scope

This International Standard specifies the Route Restriction Class additional network feature (ANF-RRC), which is applicable to various basic services supported by Private Integrated Services Networks (PISN). Basic services are specified in ISO/IEC 11574.

ANF-RRC permits a Route Access Class (RAC) to be associated with a call to indicate its entitlement to use certain facilities during routeing.

Additional network feature specifications are produced in three stages, according to the method described in CCITT Recommendation I.130 for supplementary services. This International Standard contains the stage 1 and stage 2 specifications of ANF-RRC. The stage 1 specification (clause 6) specifies the feature as seen by an entity which generates, receives, and acts on the RAC. The stage 2 specification (clause 7) identifies the functional entities involved in the feature and the information flows between them.

2 Conformance

In order to conform to this International Standard, a Stage 3 Standard shall specify signalling protocols and equipment behaviour that are capable of being used in a PISN which supports the feature specified in this International Standard. This means that, to claim conformance, a Stage 3 Standard is required to be adequate for the support of those aspects of clause 6 and clause 7 which are relevant to the interface or equipment to which the Stage 3 Standard applies.

3 Normative references

The following standards contain provisions which, through reference in this text, constitute provisions of this International Standard. At the time of publication, the editions indicated were valid. All standards are subject to revision, and parties to agreements based on this International Standard are encouraged to investigate the possibility of applying the most recent editions of the standards indicated below. Members of IEC and ISO maintain registers of currently valid International Standards.

ISO/IEC 11571:1994, *Information technology — Telecommunications and information exchange between systems — Numbering and sub-addressing in private integrated services networks.*

ISO/IEC 11574:1994, *Information technology — Telecommunications and information exchange between systems — Private Integrated Services Network — Circuit-mode 64 kbit/s bearer services — Service description, functional capabilities and information flows.*

ISO/IEC 11579-1:1994, *Information technology — Telecommunications and information exchange between systems — Private Integrated Services Network — Part 1: Reference configuration for PISN exchanges (PINX).*

CCITT Rec. I.112 (1988), *Vocabulary of Terms for ISDNs.*

CCITT Rec. I.130 (1988), *Method for the characterization of telecommunication services supported by an ISDN and network capabilities of an ISDN.*

Copyright International Organization for Standardization
Provided by IHS under license with ISO
No reproduction or networking permitted without license from IHS Not for Resale

CCITT Rec. I.210 (1988), *Principles of telecommunication services supported by an ISDN and the means to describe them.*

CCITT Rec. Z.100 (1988), *Specification and Description Language.*

4 Definitions

For the purposes of this International Standard, the following definitions apply.

4.1 External definitions

This International Standard uses the following terms defined in other documents.

- Basic service (CCITT Rec. I.210)
- Private Integrated Services Network (PISN) (ISO/IEC 11579-1)
- Private Integrated Services Network Exchange (PINX) (ISO/IEC 11579-1)
- Service (CCITT Rec. I.112)
- Signalling (CCITT Rec. I.112)
- Supplementary Service (CCITT Rec. I.210)
- User (ISO/IEC 11574)

This International Standard refers to the following basic call functional entity (FEs) defined in ISO/IEC 11574.

- Call Control (CC).

This International Standard refers to the following basic call inter-FE relationships defined in ISO/IEC 11574.

- r2

This International Standard refers to the following basic call information flows defined in ISO/IEC 11574.

- SETUP REJECT request/indication
- SETUP request/indication.

4.2 Additional Network Feature

A capability, over and above that of a basic service, provided by a PISN, but not directly to a PISN user.

4.3 Call, Basic Call

An instance of the use of a basic service.

4.4 Route Access Class (RAC)

An integer representation of the entitlement of a call to use certain facilities during routeing.

4.5 Facility Restriction Class (FRC)

Restrictions on access to a particular facility, expressed in terms of the RAC values that are entitled to use the facility and those that are not.

Copyright International Organization for Standardization
Provided by IHS under license with ISO
No reproduction or networking permitted without license from IHS Not for Resale

4.6 Facility

A physical or logical entity that a call can use in order to achieve routeing to its destination.

NOTE — Examples of facilities include international public network connections, long distance (national) public network connections, particular public networks, and particular inter-PINX links.

5 List of acronyms

ANF	Additional Network Feature
ANF-RRC	ANF Route Restriction Class
CC	Call Control (functional entity)
FE	Functional Entity
FRC	Facility Restriction Class
ISDN	Integrated Services Digital Network
PINX	Private Integrated services Network Exchange
PISN	Private Integrated Services Network
RAC	Route Access Class
SDL	Specification and Description Language

6 ANF-RRC stage 1 specification

6.1 Description

6.1.1 General description

ANF-RRC permits an RAC to be associated with a call to indicate its entitlement to use certain facilities during routeing.

6.1.2 Qualifications on applicability to telecommunication services

This additional network feature is applicable to all basic services defined in ISO/IEC 11574.

6.2 Procedure

6.2.1 Provision/Withdrawal

For the provision of ANF-RRC within a PISN, each potential source of calls (e.g. each user) shall be assigned an RAC. In addition, each facility whose use is to be controlled by ANF-RRC shall be assigned an FRC. An FRC shall consist of either:

- one or more RAC values that are entitled to use the facility; or
- one or more RAC values that are not entitled to use the facility.

Some PISNs may treat RAC values as levels, whereby each RAC value other than the lowest numbered RAC value is entitled to use all facilities that the value below can use, plus some specific additional facilities. Any PINX implementation shall be capable of providing ANF-RRC in this way and some PINX implementations may be capable of providing ANF-RRC only in this way (see annex A).

Copyright International Organization for Standardization
Provided by IHS under license with ISO
No reproduction or networking permitted without license from IHS Not for Resale

6.2.2 Normal procedures

6.2.2.1 Activation/Deactivation/Registration/Interrogation

ANF-RRC shall be permanently activated. No information needs to be registered within the PISN for this ANF, and therefore interrogation is not applicable.

6.2.2.2 Invocation and operation

An RAC shall be associated with each call in accordance with the call's source.

A call shall not use a facility that is controlled by ANF-RRC if, according to that facility's FRC, the call's RAC value is not entitled to use that facility.

NOTE — A call that cannot be progressed because its RAC value does not allow it to access facilities needed for routeing can be released in accordance with ISO/IEC 11574. Other possible actions in this situation are outside the scope of this International Standard.

6.2.3 Exceptional procedures

6.2.3.1 Activation/Deactivation/Registration/Interrogation

Not applicable.

6.2.3.2 Invocation and operation

Not applicable.

6.3 Interaction with other Supplementary Services and ANFs

Interactions with other supplementary services and ANFs for which PISN Standards were available at the time of publication of this International Standard are specified below.

6.3.1 Calling Line Identification Presentation (SS-CLIP)

No interaction.

6.3.2 Connected Line Identification Presentation (SS-COLP)

No interaction.

6.3.3 Calling/connected Line Identification Restriction (SS-CLIR)

No interaction.

6.3.4 Calling Name Identification Presentation (SS-CNIP)

No interaction.

6.3.5 Connected Name Identification Presentation (SS-CONP)

No interaction.

6.3.6 Calling/connected Name Identification Restriction (SS-CNIR)

No interaction.

6.3.7 Completion of Calls to Busy Subscriber (SS-CCBS)

No interaction.

Copyright International Organization for Standardization
Provided by IHS under license with ISO
No reproduction or networking permitted without license from IHS Not for Resale

6.3.8 Completion of Calls on No Reply (SS-CCNR)

No interaction.

6.3.9 Call Transfer (SS-CT)

No interaction.

6.3.10 Call Forwarding Unconditional (SS-CFU)

ANF-RRC can be used in the forwarding of a call as follows.

The diverted call may use either the RAC associated with the calling user or the RAC associated with the diverting user.

6.3.11 Call Forwarding Busy (SS-CFB)

As for SS-CFU (6.3.10).

6.3.12 Call Forwarding No Reply (SS-CFNR)

As for SS-CFU (6.3.10).

6.3.13 Call Deflection (SS-CD)

As for SS-CFU (6.3.10).

6.3.14 Path Replacement (ANF-PR)

An RAC shall be associated with the new connection in accordance with the call's source. The new connection shall not use a facility that is controlled by ANF-RRC if, according to that facility's FRC, the call's RAC value is not entitled to use that facility.

6.3.15 Call Offer (SS-CO)

No interaction.

6.3.16 Call Intrusion (SS-CI)

No interaction.

6.3.17 Do Not Disturb (SS-DND)

No interaction.

6.3.18 Do Not Disturb Override (SS-DNDO)

No interaction.

6.4 Interworking considerations

An RAC shall be associated with each incoming call from another network. This can either be a value supplied by the other network that supports an equivalent feature or a value assigned to the gateway.

The ability to establish an outgoing call to another network can be treated as a facility that is controlled by ANF-RRC.

When establishing an outgoing call to another network, the PISN may supply the other network with the call's RAC value if the other network supports an equivalent feature.

Copyright International Organization for Standardization
Provided by IHS under license with ISO
No reproduction or networking permitted without license from IHS Not for Resale

6.5 Overall SDL

Figure 1 contains the dynamic description of ANF-RRC using the Specification and Description Language (SDL) defined in CCITT Rec. Z.100 (1988). The SDL process represents the behaviour of the PISN in providing ANF-RRC. Input signals from the left represent primitives from the entity which invokes ANF-RRC to the entity which receives and acts on the RAC.

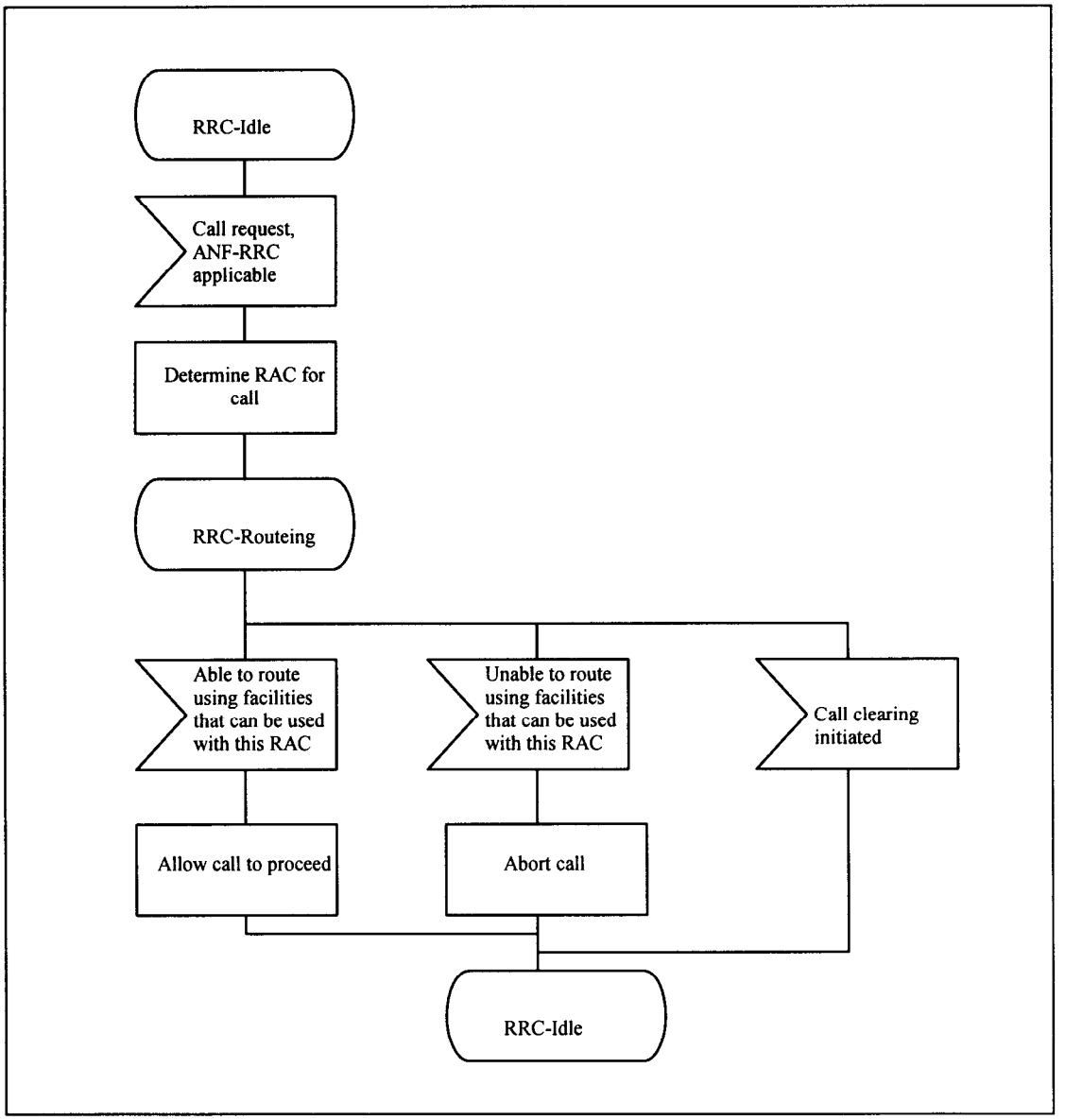

Figure 1 — ANF-RRC, Overall SDL

7 ANF-RRC stage 2 specification

7.1 Functional model

7.1.1 Functional model description

The functional model shall comprise the following functional entities:

- FE1 RRC Initiate
- FE2 RRC Execute

Copyright International Organization for Standardization
Provided by IHS under license with ISO
No reproduction or networking permitted without license from IHS Not for Resale

The following functional relationship shall exist between these Fes:

ra between FE1 and FE2 and between consecutive FE2s

Figure 2 shows these FEs and their relationship.

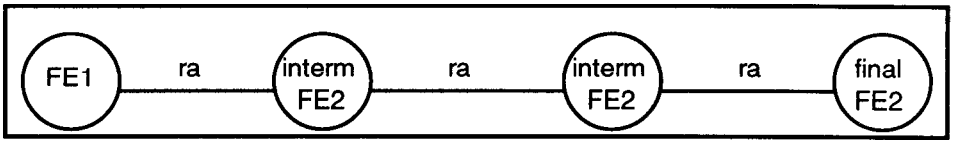

Figure 2 — Functional model for ANF-RRC

7.1.2 Description of functional entities

7.1.2.1 RRC initiate, FE1

This FE recognizes that a call is being established for which ANF-RRC is applicable and assigns an RAC to the call. It also checks that any facilities needed for the initial routeing of the call are entitled to be used by a call with that RAC. If the call is allowed to proceed, it passes that RAC to the first FE2, if applicable.

7.1.2.2 RRC execute, FE2

At the time of call establishment, this FE receives an RAC from FE1 or the preceding FE2. It checks that any facilities needed for further routeing of the call are entitled to be used by a call with that RAC. If the call is allowed to proceed, it passes the RAC to the subsequent FE2, if applicable.

7.1.3 Relationship of functional model to basic call functional model

FE1 shall be collocated with the Originating CC, an Incoming Gateway CC, or a Transit CC.

FE2 shall be collocated with the Terminating CC or Outgoing Gateway CC. In addition, an FE2 shall be collocated with each intermediate Transit CC.

Figure 3 shows an example of the relationship with the basic call functional model.

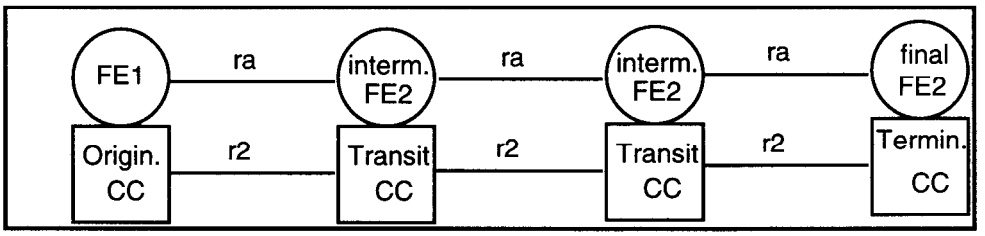

Figure 3 — Example relationship between models for ANF-RRC and basic call

7.2 Information flows

7.2.1 Definition of information flows

In the tables listing the service elements in information flows, the column headed "Request" indicates which of these service elements are mandatory (M) and which are optional (O) in a request/indication information flow.

Copyright International Organization for Standardization
Provided by IHS under license with ISO
No reproduction or networking permitted without license from IHS Not for Resale

7.2.1.1 ra-RRC (Route Restriction Class)

ra-RRC is an unconfirmed information flow across ra from FE1 to FE2 and between FE2s.

Table 1 lists the service elements within the RRC information flow.

Table 1 — Content of ra-RRC

Service element	Request
RAC	M

Service element RAC shall always be included in the ra-RRC request/indication information flow. It shall contain an integer in the range (0 to 99). This number shall be used for comparison to FRCs of outgoing Facilities at the next FE2.

7.2.2 Relationship of information flows to basic call information flows

The RRC request/indication information flow shall be sent in conjunction with the basic call information flow r2-Setup request/indication for the new connection sent across basic call relationship r2. Service element RAC of information flow Setup request/indication shall contain the number corresponding to the RAC of the call.

7.2.3 Examples of information flow sequences

A stage 3 Standard for ANF-RRC shall provide signalling procedures in support of the information flow sequences specified below. In addition, signalling procedures should be provided to cover other sequences arising from error situations, interactions with basic call, interactions with other supplementary services, different topologies, etc.

In the figures, ANF-RRC information flows are represented by solid arrows and basic call information flows are represented by broken arrows. An ellipse embracing two information flows indicates that the two information flows occur simultaneously. Within a column representing an ANF-RRC functional entity, the numbers refer to functional entity actions listed in 7.3.

7.2.3.1 Normal operation of ANF-RRC

Figure 4 shows the information flow sequence for normal operation of ANF-RRC.

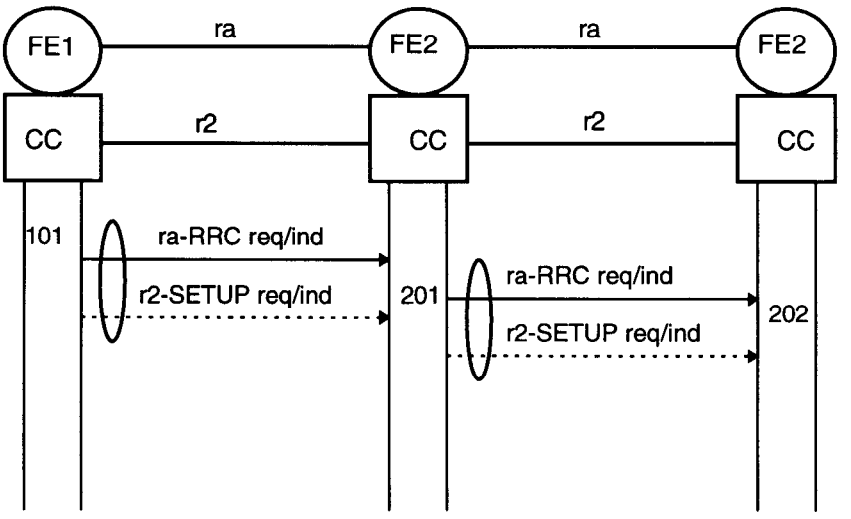

Figure 4 — Information flow sequence - normal operation of ANF-RRC

Copyright International Organization for Standardization
Provided by IHS under license with ISO
No reproduction or networking permitted without license from IHS
Not for Resale

7.2.3.2 Unavailable appropriate outgoing facility

Figure 5 shows the information flow sequence for the case that there are no appropriate outgoing facilities available for the call.

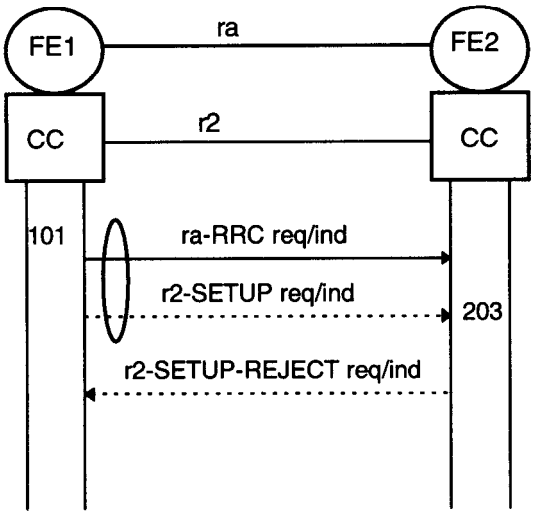

Figure 5 — Information flow sequence - unavailable appropriate outgoing facility

7.3 Functional entity actions

The following FE actions shall occur at the points indicated in the figures of 7.2.

7.3.1 Functional entity actions of FE1

FEA 101: Recognize that a call is being established for which ANF-RRC is applicable and assign an RAC to the call. Check that any facilities needed for the initial routeing of the call are entitled to be used by a call with that RAC. If the call is allowed to proceed, send an ra-RRC request/indication to FE2.

7.3.2 Functional entity actions of FE2

FEA 201: Receive an ra-RRC request/indication from FE1. Check that any facilities needed for the further routeing of the call are entitled to be used by a call with that RAC. If the call is allowed to proceed, send an ra-RRC request/indication to the next FE2.

FEA 202: Receive an ra-RRC request/indication from the preceding FE2. Check that any facilities needed for the further routeing of the call are entitled to be used by a call with that RAC.

FEA 203: Receive an ra-RRC request/indication from FE1. Discover that facilities needed for the further routeing of the call are not entitled to be used by a call with that RAC and initiate rejection of the call.

NOTE — Interaction with other supplementary services or ANFs not described in 6.3 may lead to alternative actions (e.g. interception).

7.4 Functional entity behaviour

The FE behaviours shown below are intended to illustrate typical FE behaviour in terms of information flows sent and received.

The behaviour of each FE is shown using the Specification and Description Language (SDL) defined in CCITT Rec. Z.100 (1988).

Copyright International Organization for Standardization
Provided by IHS under license with ISO
No reproduction or networking permitted without license from IHS
Not for Resale

7.4.1 Behaviour of FE1

Figure 6 shows the normal behaviour of FE1. Input symbols from the left represent internal stimuli. Output symbols to the right represent information flows to FE2. Output symbols to the left represent internal stimuli.

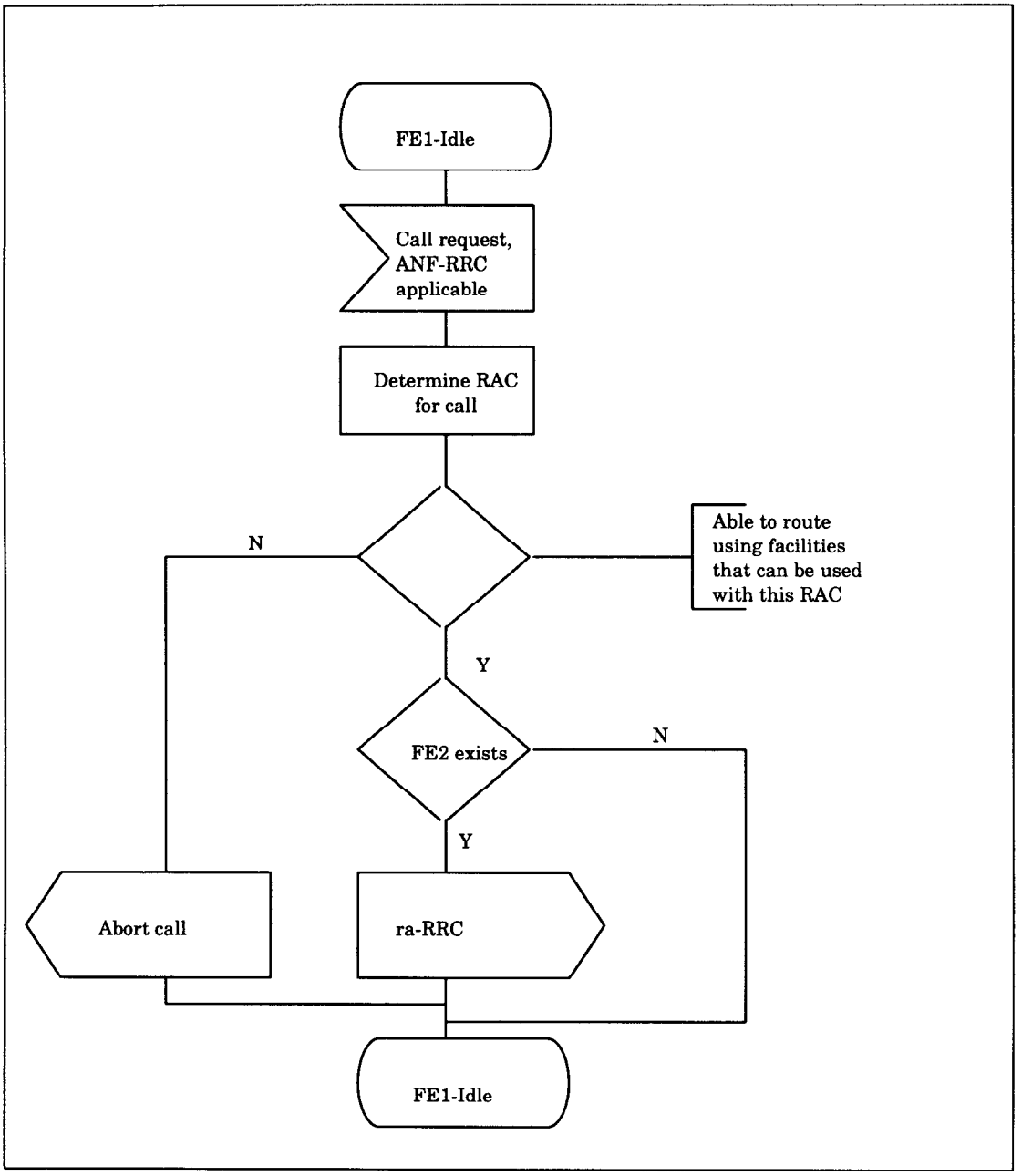

Figure 6 — ANF-RRC, SDL for functional entity FE1

Copyright International Organization for Standardization
Provided by IHS under license with ISO
No reproduction or networking permitted without license from IHS
Not for Resale

7.4.2 Behaviour of FE2

Figure 7 shows the normal behaviour of FE2. Input symbols from the left represent information flows from other FEs. Output symbols to the right represent information flows to another FE2. Output symbols to the left represent internal stimuli.

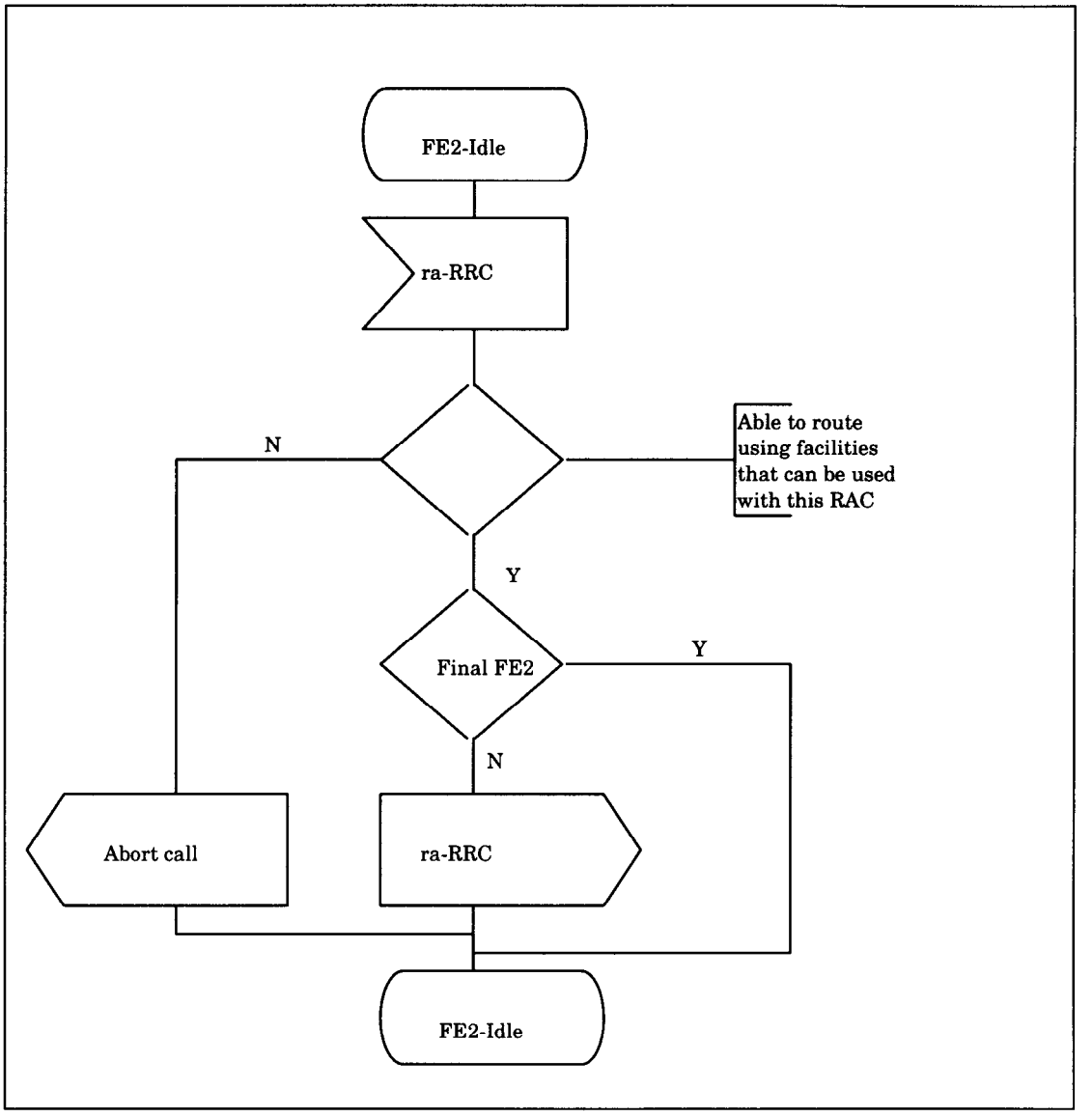

Figure 7 — ANF-RRC, SDL for functional entity FE2

Copyright International Organization for Standardization
Provided by IHS under license with ISO
No reproduction or networking permitted without license from IHS Not for Resale

7.5 Allocation of functional entities to physical equipment

The allocations of FEs to physical equipment shown in table 4 shall apply.

Table 4 — Scenarios for the Allocation of FEs to Physical Equipment

	FE1	FE2 (Note)
Scenario 1	Originating PINX	Terminating PINX
Scenario 2	Originating PINX	Outgoing Gateway PINX
Scenario 3	Incoming Gateway PINX	Terminating PINX
Scenario 4	Incoming Gateway PINX	Outgoing Gateway PINX
Scenario 5	Transit PINX	Terminating PINX
Scenario 6	Transit PINX	Outgoing Gateway PINX

NOTE — For each scenario, FE2 can be repeated at any Transit PINXs between the PINX at which FE1 is located and the Terminating or Outgoing Gateway PINX. FE2 can be absent altogether if the PINX at which FE1 is located is also the Terminating or Outgoing Gateway PINX.

7.6 Interworking considerations

The facility used to handle calls that interwork with another network are assigned FRCs for the purpose of outgoing call access and calls received from the other network are assigned a RAC that is determined by the network administrator.

All information flows will be internal to the PISN.

Copyright International Organization for Standardization
Provided by IHS under license with ISO
No reproduction or networking permitted without license from IHS
Not for Resale

Annex A

(informative)

Examples of the application of ANF-RRC

The meaning of particular RAC values will depend on the PISN concerned. This annex gives two examples of ways in which ANF-RRC can be applied.

A.1 Treatment of RAC values as levels (Hierarchichal Scheme)

A PISN can be configured so that each RAC value represents a level, whereby a given RAC value represents a higher level of capability than the value below. Therefore a given RAC value is allowed access to all of the facilities that the value below is allowed access to, plus some specific additional facilities. In this particular case, an FRC value for a particular facility can be expressed simply in terms of the lowest RAC value that is allowed to access that facility.

This method is simple to manage and is sufficient for PISNs in which user requirements for access to facilities can be broken down into levels, perhaps reflecting levels in an organisation. As a minimum, PINX implementations are required to support this method.

Taking as an example a PISN with 4 RAC values, 5 facilities, and 5 users, Table A.1 shows a possible mapping of users to RACs.

Table A.1 — Users and the associated RACs

User	RAC
a	1
b	2
c	3
d	4
e	3

Table A.2 shows the possible FRCs for these facilities and as a consequence users that can access these facilities.

Table A.2 — Example of Hierarchical FRCs

Facility	FRC (List of RACs that are allowed access)	List of Users that are allowed Access
A	4	d
B	2, 3, 4	b, c, d, e
C	all (1, 2, 3, 4)	all (a, b, c, d, e)
D	3, 4	c, d, e
E	3, 4	c, d, e

As shown in Table A.1, Users c and e have the same RAC. If there is a need to allow User c to call City X, but not City Y, and allow User e to call City Y, but not City X, other supplementary services or ANFs (e.g. Call Barring) can be used at the Originating PINX. This might be sufficient to overcome the limitations of the hierarchical scheme.

Copyright International Organization for Standardization
Provided by IHS under license with ISO
No reproduction or networking permitted without license from IHS Not for Resale

A.2 Non-hierarchichal Scheme

The method described in A.1 is not suitable for use in some PISNs. In particular, it is unable to handle the situation where one group of users is to be granted access to facility A but not to facility B, whereas a second group of users is to be granted access to facility B but not to facility A. In such situations a non-hierarchical method of assigning meanings to RAC values will normally be required, such that for any given facility the FRC value is a list of the RAC values that are allowed to use the facility. Taking as an example a PISN with four RAC values (see Table A.1) and five facilities (A to E), the FRCs for those five facilities might be as shown in Table A.3.

Table A.3 — Example of Non-Hierarchical FRCs

Facility	FRC (List of RACs that are allowed access)	List of Users that are allowed Access
A	2, 3, 4	b, c, d, e
B	3, 4	c, d, e
C	1, 4	a, d
D	4	d
E	2, 4	b, d

It can be seen from Table A.3 that users with RAC 1 can access facility C, users with RAC 2 can access facilities A and E, users with RAC 3 can access facilities A and B, and users with RAC 4 can access all five facilities.

Copyright International Organization for Standardization
Provided by IHS under license with ISO
No reproduction or networking permitted without license from IHS Not for Resale

© ISO/IEC

ICS 35.110

Descriptors: data processing, information interchange, telecommunications, network interconnection, telecommunication network, ISDN, private network, specifications, models.

Price based on 14 pages

Copyright International Organization for Standardization
Provided by IHS under license with ISO
No reproduction or networking permitted without license from IHS

Not for Resale