INTERNATIONAL STANDARD

ISO/IEC 12248

First edition
1993-12-15

Information technology — 3,81 mm wide magnetic tape cartridge for information interchange — Helical scan recording — DATA/DAT-DC format using 60 m and 90 m length tapes

Technologies de l'information — Cartouche de bande magnétique de 3,81 mm *de large pour l'échange d'information — Enregistrement par balayage en spirale — Format DATA/DAT-DC utilisant des bandes de* 60 m *et* 90 m *de long*

Reference number
ISO/IEC 12248:1993(E)

Copyright International Organization for Standardization
Provided by IHS under license with ISO
No reproduction or networking permitted without license from IHS

Not for Resale

Contents

		Page
1	Scope	1
2	Conformance	1
2.1	Magnetic tape cartridge	1
2.2	Generating system	1
2.3	Receiving system	1
3	Normative references	1
4	Definitions	2
4.1	Absolute Frame Number (AFN)	2
4.2	algorithm	2
4.3	Area ID	2
4.4	Automatic Track Finding (ATF)	2
4.5	Average Signal Amplitude	2
4.6	azimuth	2
4.7	back surface	2
4.8	byte	2
4.9	cartridge	2
4.10	Channel Bit	2
4.11	Codeword	2
4.12	Data Format ID	2
4.13	End of Data (EOD)	2
4.14	End of Information (EOI)	2
4.15	End of Partition (EOP)	2
4.16	entity	2
4.17	Error Correcting Code (ECC)	2
4.18	flux transition position	2
4.19	flux transition spacing	2
4.20	frame	2
4.21	group	2
4.22	Logical Beginning of Tape (LBOT)	2

© ISO/IEC 1993
All rights reserved. Unless otherwise specified, no part of this publication may be reproduced or utilized in any form or by any means, electronic or mechanical, including photocopying and microfilm, without permission in writing from the publisher.

ISO/IEC Copyright Office • Case postale 56 • CH-1211 Genève 20 • Switzerland

Printed in Switzerland

Copyright International Organization for Standardization
Provided by IHS under license with ISO
No reproduction or networking permitted without license from IHS
Not for Resale

4.23	Logical End of Tape (LEOT)	2
4.24	magnetic tape	3
4.25	master reference	3
4.26	Master Standard Amplitude Calibration Tape	3
4.27	Master Standard Reference Tape	3
4.28	Optimum Recording Field	3
4.29	partition	3
4.30	partition reference	3
4.31	Physical Beginning of Tape (PBOT)	3
4.32	Physical End of Tape (PEOT)	3
4.33	physical recording density	3
4.34	pre-recording condition	3
4.35	processed record	3
4.36	processed record sequence	3
4.37	processing	3
4.38	record	3
4.39	Reference Recording Field	3
4.40	Secondary Standard Amplitude Calibration Tape	3
4.41	Secondary Standard Reference Tape	3
4.42	Separator Mark	3
4.43	Standard Referemce Amplitude	4
4.44	tape noise amplitude	4
4.45	Tape Reference Edge	4
4.46	track	4
5	Environment and safety	4
5.1	Testing environment	4
5.2	Operating environment	4
5.3	Storage environment	4
5.4	Transportation	4
5.5	Safety	5
5.6	Flammability	5
Section 2 - Requirements for the case		5
6	Dimensional and mechanical characteristics of the case	5
6.1	General	5
6.2	Overall dimensions	5
6.3	Loading grip	6
6.4	Holding areas	6
6.5	Notches of the lid	6
6.6	Lid dimensions	6
6.7	Optical detection of the beginning and end of tape	7
6.8	Bottom side	8
6.8.1	Locking mechanism of the slider	8
6.8.2	Access holes	9
6.8.3	Recognition, sub-datum and write-inhibit holes	9
6.8.4	Datum holes	10
6.8.5	Access room for tape guides	11
6.8.6	Holes for accessing the hubs	11

Copyright International Organization for Standardization
Provided by IHS under license with ISO
No reproduction or networking permitted without license from IHS
Not for Resale

6.8.7	Internal structure of the lower half	11
6.8.8	Light path	12
6.8.9	Support areas	13
6.8.10	Datum areas	13
6.8.11	Relationship between support and datum areas and Reference Plane Z	13
6.9	Hubs	13
6.10	Leader and trailer attachment	14
6.11	Interface between the hubs and the drive spindles	14
6.12	Opening of the lid	14
6.13	Release of the hub locking mechanism	14
6.14	Label areas	15
Section 3 - Requirements for the unrecorded tape		26
7	Mechanical, physical and dimensional characteristics of the tape	26
7.1	Materials	26
7.2	Tape length	26
7.2.1	Length of magnetic tape	26
7.2.2	Length of leader and trailer tapes	26
7.3	Tape width	26
7.4	Discontinuities	26
7.5	Total thickness	26
7.6	Longitudinal curvature	26
7.7	Cupping	26
7.8	Coating adhesion	27
7.9	Layer-to-layer adhesion	27
7.10	Tensile Strength	28
7.10.1	Breaking Strength	28
7.10.2	Yield Strength	28
7.11	Residual elongation	28
7.12	Electrical resistance of coated surfaces	28
7.13	Light transmittance of tape	29
8	Magnetic recording characteristics	29
8.1	Optimum recording field	30
8.2	Signal amplitude	30
8.3	Resolution	30
8.4	Overwrite	30
8.4.1	Physical recording densities of 750,6 and 3 002 ftpmm	30
8.4.2	Physical recording densities of 83,4 ftpmm and 1 001 ftpmm	31
8.5	Ease of erasure	31
8.6	Tape quality	31
8.6.1	Missing pulses	31
8.6.2	Missing pulse zone	31
8.7	Signal-to-noise ratio (S/N) characteristic	31

Copyright International Organization for Standardization
Provided by IHS under license with ISO
No reproduction or networking permitted without license from IHS
Not for Resale

Section 4 - Format		32
9	DATA/DAT-DC format	32
9.1	General	32
9.2	Basic Groups	32
9.2.1	Basic Groups for Group Format 0	32
9.2.2	Basic Groups for Group Format 1	34
9.3	Sub-groups	35
9.3.1	G1 Sub-group	35
9.3.2	G2 Sub-group	36
9.3.3	G3 Sub-group	36
9.3.4	G4 Sub-group	37
9.3.5	Main Data Block	42
9.4	Sub-Data area	43
9.4.1	Pack Item No. 1	44
9.4.2	Pack Item No. 2	45
9.4.3	Pack Item No. 3	47
9.4.4	Pack Item No. 4	48
9.4.5	Pack Item No. 5	48
9.4.6	Pack Item No. 6	49
9.4.7	Pack Item No. 7	50
9.4.8	Sub Data Block	50
9.5	Basic Group structure	52
9.5.1	User Data	52
9.5.2	System Data	53
9.5.3	Record ID list	57
9.5.4	Heuristic Recovery Data Area	62
10	Method of recording	62
10.1	Physical recording density	62
10.2	Long-Term average bit cell length	62
10.3	Short-Term average bit cell length	62
10.4	Rate of change	62
10.5	Bit shift	62
10.6	Read signal amplitude	62
10.7	Maximum recorded levels	62
11	Track geometry	63
11.1	Track configuration	63
11.2	Average track pitch	63
11.3	Variations of the track pitch	63
11.4	Track width	64
11.5	Track angle	64
11.6	Track edge linearity	64
11.7	Track length	64
11.8	Ideal tape centreline	64
11.9	Azimuth angles	64

Copyright International Organization for Standardization
Provided by IHS under license with ISO
No reproduction or networking permitted without license from IHS
Not for Resale

12	Recording of blocks on the tape	64
12.1	Recorded Main Data Block	64
12.2	Recorded Sub Data Block	64
12.3	Margin Blocks, Preamble Blocks and Postamble Blocks	65
12.4	Spacer Blocks	65
13	Format of a track	65
13.1	Track capacity	65
13.2	Positioning accuracy	65
13.3	Tracking scheme	65
14	Group Formats	68
14.1	Group Format 0	68
14.2	Group Format 1	68
14.3	Extended Gap Frames	69
14.3.1	Extended Leading Gap Frames	69
14.3.2	Extended Trailing Gap Frames	69
14.4	Types of Groups	69
14.4.1	Normal Groups	70
14.4.2	Spare Groups	70
14.4.3	Amble Groups	70
14.4.4	Header Groups	70
15	Magnetic tape layout	71
15.1	Load/Unload Area	71
15.2	Lead-in Area	72
15.2.1	Preamble	72
15.2.2	Header	72
15.2.3	Format Parameter Set	74
15.2.4	Master Reference	79
15.2.5	Postamble	84
15.3	Partition	85
15.3.1	Partition Preamble	85
15.3.2	Partition Reference	85
15.3.3	Partition Postamble	96
15.3.4	Partition Data	96
15.3.5	End of Partition (EOP)	96
15.3.6	Unused Area	97
15.4	EOI	97
15.5	Repeated Groups	97
15.6	Repeated Frames within a Normal Group	97
15.7	Relocation of Defective Groups	98
15.8	Appending	98
15.8.1	Seamless appending	98
15.8.2	Non-seamless appending	100
15.9	Overwrite	101

Copyright International Organization for Standardization
Provided by IHS under license with ISO
No reproduction or networking permitted without license from IHS
Not for Resale

15.9.1 Overlapped track width 102
15.9.2 Non-overlapped track width 102
15.9.3 Rules for overwrite 102

Annexes

A - Measurement of the light transmittance of the prisms 103

B - Recognition holes 105

C - Means for opening the lid 106

D - Measurement of light transmittance of tape and leaders 107

E - Measurement of Signal-to-Noise Ratio 110

F - Method for determining the nominal and the maximum allowable recorded levels 111

G - Representation of 8-bit bytes by 10-bit pattern 112

H - Measurement of bit shift 118

J - Recommendations for transportation 121

K - Method of measuring track edge linearity 122

L - Read-After-Write 123

M - Data allocation and C3 parity 124

Copyright International Organization for Standardization
Provided by IHS under license with ISO
No reproduction or networking permitted without license from IHS
Not for Resale

Foreword

ISO (the International Organization for Standardization) and IEC (the International Electrotechnical Commission) form the specialized system for worldwide standardization. National bodies that are members of ISO or IEC participate in the development of International Standards through technical committees established by the respective organization to deal with particular fields of technical activity. ISO and IEC technical committees collaborate in fields of mutual interest. Other international organizations, governmental and non-governmental, in liaison with ISO and IEC, also take part in the work.

In the field of information technology, ISO and IEC have established a joint technical committee, ISO/IEC JTC 1. Draft International Standards adopted by the joint technical committee are circulated to national bodies for voting. Publication as an International Standard requires approval by at least 75 % of the national bodies casting a vote.

International Standard ISO/IEC 12248 was prepared by the European Computer Manufacturers Association (ECMA) (as Standard ECMA-171) and was adopted, under a special "fast-track procedure", by Joint Technical Committee ISO/IEC JTC 1, *Information technology*, in parallel with its approval by national bodies of ISO and IEC.

Annexes A, D, E, F, G, H, K and M form an integral part of this International Standard. Annexes B, C, J and L are for information only.

Copyright International Organization for Standardization
Provided by IHS under license with ISO
No reproduction or networking permitted without license from IHS
Not for Resale

Introduction

ISO/IEC have produced a series of International Standards for cassettes and cartridges containing magnetic tapes of different width and characteristics. Of these, the following relate to helical scan recording.

ISO/IEC 10777:1991, *3,81 mm wide magnetic tape cartridge foR information interchange - Helical scan recording - DDS format*

ISO/IEC 11319:1993, *8 mm wide magnetic tape cartridge for information interchange - Helical scan recording*

ISO/IEC 11321:1992, *3,81 mm wide magnetic tape cartridge for information interchange - Helical scan Recording - DATA/DAT format*

ISO/IEC 11557:1992, *3,81 mm wide magnetic tape cartridge for information interchange - Helical scan recording - DDS-DC format using 60 m and 90 m length tapes, 2nd edition*

ISO/IEC 12246:1993, *8 mm wide magnetic tape cartridge, dual azimuth format for information interchange - Helical scan recording*

ISO/IEC 12247:1993, *3,81 mm wide magnetic tape cartridge for information interchange - Helical scan recording - DDS format using 60 m and 90 m length tapes*

Copyright International Organization for Standardization
Provided by IHS under license with ISO
No reproduction or networking permitted without license from IHS
Not for Resale

Information technology - 3,81 mm wide magnetic tape cartridge for information interchange - Helical scan recording - DATA/DAT-DC format using 60 m and 90 m length tapes

Section 1 - General

1 Scope

This International Standard specifies the physical and magnetic characteristics of a 3,81 mm wide magnetic tape cartridge to enable interchangeability of such cartridges. It also specifies the quality of the recorded signals, the recorded format and the recording method, thereby allowing data interchange between drives by means of such magnetic tape cartridges. The format used is known as DATA/DAT-DC.

This International Standard specifies two types of cartridges which, for the purpose of this International Standard, are referred to as Type A and Type B.

For Type A, the magnetic tape has a nominal thickness of 13 µm and a nominal length of up to 60,5 m.

For Type B, the magnetic tape has a nominal thickness of 9 µm a length of up to 92,0 m.

Information interchange between systems by means of this International Standard also requires the use, at a minimum, of a labelling and file structure and an interchange code which are agreed upon by the interchange parties. It is not within the scope of this International Standard to specify the labelling and file structure, or the interchange code.

2 Conformance

2.1 Magnetic tape cartridge

A tape cartridge shall be in conformance with this International Standard if it meets all mandatory requirements specified herein for either Type A or Type B. The tape requirements shall be satisfied throughout the extent of the tape.

2.2 Generating system

A system generating a magnetic tape cartridge for interchange shall be entitled to claim conformance to this International Standard if all recordings on the tape meet the mandatory requirements of this International Standard. A claim of conformance shall state whether cartridges of Type A or Type B or both are supported.

2.3 Receiving system

A system receiving a magnetic tape cartridge for interchange shall be entitled to claim conformance with this International Standard if it is able to handle any recording made on the tape according to this International Standard. A claim of conformance shall state whether cartridges of Type A or Type B or both are supported.

3 Normative references

The following standards contain provisions which, through reference in this text, constitute provisions of this International Standard. At the time of publication, the editions indicated were valid. All standards are subject to revision, and parties to agreements based on this International Standard are encouraged to investigate the possibility of applying the most recent editions of the standards listed below. Members of IEC and ISO maintain registers of currently valid International Standards.

ISO/R 527:1966, *Plastics - Determination of tensile propertie.s*

ISO/IEC 646:1991, *Information technology - ISO 7-bit coded character set for information interchange.*

ISO 1302:1992, *Technical drawings - Method of indicating surface texture.*

Copyright International Organization for Standardization
Provided by IHS under license with ISO
No reproduction or networking permitted without license from IHS
Not for Resale

ISO/IEC 11576:1993, *Information technology - Procedure for the registration of algorithms for the lossless compression of data.*

IEC 950:1991, *Safety of information technology equipment, including electrical business equipment*

4 Definitions

For the purposes of this International Standard, the following definitions apply.

4.1 Absolute Frame Number (AFN): A sequence number allocated to, and recorded in, each frame.

4.2 algorithm: A set of rules for transforming the logical representation of data.

4.3 Area ID: An identifier for each area of the tape specifying the types of frame written therein.

4.4 Automatic Track Finding (ATF): A method by which tracking is achieved.

4.5 Average Signal Amplitude: The average peak-to-peak value of the output signal from the read head at the fundamental frequency of the specified physical recording density, over a minimum of 7,8 mm of track, exclusive of missing pulses.

4.6 azimuth: The angular deviation, in degrees, minutes and seconds of arc, made by the mean flux transition line with the line normal to the centreline of the recorded track.

4.7 back surface: The surface of the tape opposite to the magnetic coating which is used to record data.

4.8 byte: An ordered set of bits acted upon as a unit.

4.9 cartridge: A case containing magnetic tape stored on twin hubs.

4.10 Channel Bit: A bit after 8-to-10 transformation.

4.11 Codeword: A word which is generated by a processing algorithm. The number of bits in a Codeword is variable, and is not specified in this International Standard.

4.12 Data Format ID: An identifier specifying which data format is being used on the tape.

4.13 End of Data (EOD): The point where the host stopped writing data on the tape.

4.14 End of Information (EOI): A group which indicates the end of partition area in a tape.

4.15 End of Partition (EOP): A group which indicates the end of data area in a partition.

4.16 entity: A unit of recorded data, comprising a processed record sequence resulting from the application of a common processing algorithm.

4.17 Error Correcting Code (ECC): A mathematical algorithm yielding check bytes used for the detection and correction of errors.

4.18 flux transition position: That point which exhibits maximum free-space flux density normal to the tape surface.

4.19 flux transition spacing: The distance along a track between successive flux transitions.

4.20 frame: A pair of adjacent tracks with azimuth of opposite polarity, in which the track with the positive azimuth precedes that with the negative azimuth.

4.21 group: A number of frames constituting a recorded unit.

4.22 Logical Beginning of Tape (LBOT): The point along the length of the tape where the recording of data for interchange commences.

4.23 Logical End of Tape (LEOT): A point along the length of the tape which indicates the approach, in the direction of tape motion, of the partition boundary or physical end of tape.

Copyright International Organization for Standardization
Provided by IHS under license with ISO
No reproduction or networking permitted without license from IHS
Not for Resale

4.24 magnetic tape: A tape which will accept and retain magnetic signals intended for input, output, and storage purposes on computers and associated equipment.

4.25 master reference: The area which contains partition information in the tape.

4.26 Master Standard Amplitude Calibration Tape: A pre-recorded tape on which the standard signal amplitudes have been recorded in the tracks of positive azimuth, 23,0 µm wide, at nominal track pitch, on an AC-erased tape.

NOTE 1 - The tape includes recordings made at 83,4 ftpmm, 333,6 ftpmm, 500,4 ftpmm, 1001 ftpmm and 1501 ftpmm.

NOTE 2 - The Master Standard Amplitude Calibration Tape has been established by the Sony Corporation.

4.27 Master Standard Reference Tape: A tape selected as the standard for Reference Recording Field, Signal Amplitude, Resolution Overwrite and Signal-to-Noise Ratio.

NOTE 3 - The Master Standard Reference Tape has been established by the Sony Corporation.

4.28 Optimum Recording Field: In the plot of Average Signal Amplitude against the recording field at the physical recording density of 3002 ftpmm, the field that causes the maximum Average Signal Amplitude.

4.29 partition: Partition of a tape in which user data is recorded.

4.30 partition reference: The area which contains group information in the partition.

4.31 Physical Beginning of Tape (PBOT): The point where the leader tape is joined to the magnetic tape.

4.32 Physical End of Tape (PEOT): The point where the trailer tape is joined to the magnetic tape.

4.33 physical recording density: The number of flux transitions per unit length of track, expressed in flux transitions per millimetre (ftpmm).

4.34 pre-recording condition (maximum recorded levels)**:** The recording levels above which a tape intended for interchange shall not previously have been recorded.

4.35 processed record: A sequence of Codewords which result from the application of processing to data.

4.36 processed record sequence: A sequence of one or more processed records which start on an 8-bit boundary and end on a subsequent 8-bit boundary.

4.37 processing: The use of an algorithm to transform host data into Codewords.

4.38 record: Related data treated as a unit of information.

4.39 Reference Recording Field: The optimum recording field of the Master Standard Reference Tape.

4.40 Secondary Standard Amplitude Calibration Tape: A tape pre-recorded as defined for the Master Standard Amplitude Calibration Tape; the outputs of which are known and stated in relation to that of the Master Standard Amplitude Calibration Tape.

NOTE 4 - The Secondary Standard Amplitude Calibration Tape can be ordered from the Sony Corporation, Audio Device Business Department, Component Marketing Group 4-10-18, Takanawa, Minato-ku, Tokyo 108, Japan, under Part Number TY-7000 G until the year 2000. It is intended that these be used for calibrating tertiary tapes for use in routine calibration.

4.41 Secondary Standard Reference Tape: A tape the performance of which is known and stated in relation to that of the Master Standard Reference Tape.

NOTE 5 - A Secondary Standard Reference Tape can be ordered from the Sony Corporation, Audio Device Business Department, Component Marketing Group 4-10-18. Takanawa, Minato-ku, Tokyo 108, Japan, under Part Number RSD 1079 until the year 2000. It is intended that these be used for calibrating tertiary tapes for use in routine calibration.

4.42 Separator Mark: A record containing no user data, which is used to separate data.

Copyright International Organization for Standardization
Provided by IHS under license with ISO
No reproduction or networking permitted without license from IHS
Not for Resale

4.43 Standard Reference Amplitude: The Average Signal Amplitude from the tracks of positive azimuth of the Master Standard Amplitude Calibration Tape at a specified physical recording density.

4.44 tape noise amplitude: The tape noise amplitude is the subtractive value of amplifier noise from total noise in rms.

4.45 Tape Reference Edge: The bottom edge of the tape when viewing the recording side of the tape with the PEOT of the tape to the observer's right.

4.46 track: A diagonally positioned area on the tape along which a series of magnetic signals may be recorded.

5 Environment and safety

Unless otherwise stated, the conditions specified below refer to ambient conditions in the air immediately surrounding the cartridge.

5.1 Testing environment

Unless otherwise stated, tests and measurements made on the tape cartridge to check the requirements of this International Standard shall be carried out under the following conditions:

temperature	: 23 °C ± 2 °C
relative humidity	: 40 % to 60 %
conditioning period before testing	: 24 h

5.2 Operating environment

Cartridges used for data interchange shall be capable of operating under the following conditions:

temperature	: 5 °C to 45 °C
relative humidity	: 20 % to 80 %
wet bulb temperature	: 26 °C max.

There shall be no deposit of moisture on or in the cartridge.

Conditioning before operating:

If a cartridge has been exposed during storage and/or transportation to a condition outside the above values, before use the cartridge shall be conditioned in the operating environment for a time at least equal to the period during which it has been out of the operating environment, up to a maximum of 24 h.

NOTE 6 - Rapid variations of temperature should be avoided.

5.3 Storage environment

For long term or archived storage of cartridges the following conditions shall be observed:

temperature	: 5 °C to 32 °C
relative humidity	: 20 % to 60 %
maximum wet bulb temperature	: 26 °C max.

The stray magnetic field at any point on the tape shall not exceed 4 000 A/m. There shall be no deposit of moisture on or in the cartridge.

5.4 Transportation

Recommended limits for the environment to which a cartridge may be subjected during transportation, and the precautions to be taken to minimize the possibility of damage, are provided in annex J.

Copyright International Organization for Standardization
Provided by IHS under license with ISO
No reproduction or networking permitted without license from IHS
Not for Resale

5.5 Safety

The cartridge and its components shall satisfy the requirements of IEC 950.

5.6 Flammability

The cartridge and its components shall be made from material which, if ignited from a match flame, do not continue to burn in a still carbon dioxide atmosphere.

Section 2 - Requirements for the case

6 Dimensional and mechanical characteristics of the case

6.1 General

The case of the cartridge shall comprise:

- an upper half- a lower half,
- a slider movably mounted on the lower half,
- a lid pivotally mounted on the upper half.

In the drawings, using third angle projection, an embodiment of the cartridge is shown as an example.

Figure 1	is a perspective view of the cartridge seen from the top.
Figure 2	is a perspective view of the cartridge seen from the bottom.
Figure 3	is a partial view of the rear side.
Figure 4	is a schematic view showing the Reference Planes X, Y, and Z.
Figure 5	shows the front side.
Figure 6	shows the top side with the lid in closed position.
Figure 7	shows the left side.
Figure 8	shows the top side with the lid in open position.
Figure 9	shows the left side with the lid in open position.
Figure 10	shows the bottom side with the lid and the slide in closed position.
Figure 11	shows the bottom side with the lid and the slider in open position.
Figure 12	is a view from the top of the inside of the lower half with the upper half removed.
Figure 13	is a view of the bottom half with the lid and the slider in open position.
Figure 14	is a view of the left side with the lid and the slider in open position.
Figure 15	is a top view of a hub.
Figure 16	is a side view of a hub with partial cross section.
Figure 17	is a partial cross-section through a hub and both halves of the case showing the interface with the drive spindle.
Figure 18	shows at a larger scale the lid in the open position.
Figure 19, 20	show at a larger scale the functional relationship between the lid and the locking mechanism of the hubs.
Figure 21, 22	show the label areas on the top and the rear side.

The dimensions are referred to three orthogonal Reference Planes X, Y, and Z (figure 4).

6.2 Overall dimensions (figures 6 and 7)

The overall dimensions of the case with the lid in the closed position shall be:

L_1 = 73,0 mm ± 0,3 mm

L_2 = 54,0 mm ± 0,3 mm

L_3 = 10,5 mm ± 0,2 mm

Copyright International Organization for Standardization
Provided by IHS under license with ISO
No reproduction or networking permitted without license from IHS
Not for Resale

The edges formed by the rear side and left and right sides shall be rounded off with a radius

R_1 = 1,5 mm max.

The two edges of the lid shall be rounded off with a radius

R_2 = 0,5 mm max.

6.3 Loading grip (figure 6)

The top side shall have a loading grip for loading and positioning the cartridge into the drive. The position and dimensions of the loading grip shall be

L_4 = 25,5 mm ± 0,3 mm

L_5 = 10 mm min.

L_6 = 5,0 mm ± 0,2 mm

L_7 = 2,0 mm min.

The depth of the loading grip below surface of the top side shall be

$0{,}5\ \text{mm}\ {}^{+0,2}_{-0,0}\ \text{mm}$

6.4 Holding areas (figure 6)

The two areas shown shaded in figure 6 shall be the areas along which the cartridge shall be held down when inserted in the drive. Their positions and dimensions shall be

L_8 = 6,0 mm ± 0,1 mm

L_9 = 5,0 mm ± 0,1 mm

6.5 Notches of the lid (figures 5 and 8)

The lid shall have two pairs of notches.

The first pair of notches, the slider lock release notches, allows elements of the drive to release the locking mechanism of the slider. The positions and dimensions of these notches shall be

L_{10} = 0,4 mm max.

L_{11} = 3,0 mm min.

L_{12} = 1,2 mm ± 0,1 mm

L_{13} = 49,8 mm ± 0,2 mm

The second pair of notches, the slider movement notches, allows elements of the drive to move the slider from closed to open position (see also 6.8.1). The positions and dimensions of these notches shall be

L_{11} = 3,0 mm min.

L_{14} = 0,9 mm min.

L_{15} = 7,5 mm ± 0,1 mm

L_{16} = 36,00 mm ± 0,15 mm

6.6 Lid dimensions (figures 6 to 8)

The lid is shown in closed position in figures 6 and 7. Its dimensions shall be

Copyright International Organization for Standardization
Provided by IHS under license with ISO
No reproduction or networking permitted without license from IHS
Not for Resale

L_{17} = 1,2 mm ± 0,1 mm

L_{18} = 6,8 mm ± 0,4 mm

L_{19} = 1,1 mm ± 0,1 mm

L_{20} = 2,0 mm ± 0,1 mm

L_{21} = 6,4 mm ± 0,2 mm

L_{22} = 1,5 mm ± 0,1 mm

R_3 = 6,8 mm ± 0,4 mm

The lid shall have a chamfer of 45° with a length of

L_{23} = 1,5 mm ± 0,1 mm

There shall be a dimensional relationship between the height L_{24} shown in figure 7, which includes the slider and the upper half, and the height L_{25} of the lid. When a vertical force of 1 N is exerted on the upper half the following conditions shall be met

L_{24} = 10,5 mm ± 0,2 mm

$L_{25} \leq L_{24}$

When no force is exerted

L_{24} = 10,9 mm max.

In figure 8 the lid is shown in open position. The distance from the front edge of the lid to the rear side shall be

L_{26} = 55,5 mm ± 0,3 mm

6.7 Optical detection of the beginning and end of tape (figures 9 and 12)

Means for the optical detection of the beginning and end of tape shall be provided. These shall consist of a pair of windows on the left and right sides of the case (see also figure 18). The design of these windows allows this detection for two different drive designs:

- either a light source and a detector are provided in the drive on each side of the cartridge, in which case the light enters the case through the upper windows, falls on a prism (see section A-A) mounted inside the case which reflects this light so that it goes through the tape and falls on the detector through the lower window; the light transmittance of the prism shall be greater than 50 % of that of a reference prism when measured as specified in annex A,
- or, the light of a light source within the drive passes through the tape from inside the cartridge and falls through the lower windows on to the detectors placed on each side of the case.

The positions and dimensions of these windows allow the cartridge to be used with drives implementing either system, they shall be

L_{27} = 6,20 mm ± 0,10 mm

L_{28} = 7,65 mm ± 0,10 mm

$L_{29} = 1{,}50\ \text{mm}^{+0{,}20}_{-0{,}00}$ mm

L_{30} = 3,9 mm ± 0,1 mm

L_{31} = 1,8 mm ± 0,1 mm

L_{32} = 7,0 mm ± 0,2 mm

Copyright International Organization for Standardization
Provided by IHS under license with ISO
No reproduction or networking permitted without license from IHS
Not for Resale

L_{33} = 2,5 mm min.

Dimension L_{32} specifies the position of the rear edge of the windows relative to Reference Plane Y. Dimension L_{33} shall be measured relative to this rear edge.

6.8 Bottom side (figures 10 and 11)

The bottom side is shown in figure 10 with the lid and the slider in closed position and in figure 11 with both in the open position.

The dimension L_{34} of the bottom half, L_{35} of the slider and L_{36} of the lid shall satisfy the following conditions

L_{34} = 73,0 mm ± 0,3 mm

$L_{35} \leq L_{34}$

$L_{36} \leq L_{34}$

6.8.1 Locking mechanism of the slider

The cartridge shall have a locking mechanism for the slider which locks it in the closed and open positions. The design of this mechanism is not specified by this International Standard, except for the different forces acting on the slider, and for its detent.

The slider shall be spring-loaded by a spring holding it in closed position when it is unlocked. The force required to operate the slider shall not exceed 2 N.

The slider shall have two grooves with an opening at both ends. The detent of the locking mechanism shall protrude through these openings so as to hold the slider in both open and closed positions. The detent shown in cross section C-C is only an example of implementation.

The grooves are parallel to Reference Plane Z and aligned with the slider lock release notches of the lid. The positions and dimensions of the grooves and of the openings for the detent of the locking mechanism when the slider is in the closed position shall be

L_{37} = 1,2 mm ± 0,1 mm

L_{38} = 49,8 mm ± 0,2 mm

L_{39} = 10,0 mm ± 0,1 mm

$L_{40} = 2{,}0\ \text{mm}\ ^{+\,0{,}5}_{-\,0{,}1}\ \text{mm}$

L_{41} = 3,0 mm min.

L_{42} = 1,5 mm min.

L_{43} = 0,8 mm ± 0,1 mm

$L_{44} = 0{,}8\ \text{mm}\ ^{+\,0{,}5}_{-\,0{,}1}\ \text{mm}$

λ = 45° min.

L_{45} = 0,65 mm ± 0,05 mm

The position and dimensions of the openings for the detent when the slider is held in the open position are determined by L_{39}, L_{40}, L_{43}, and L_{44}.

In the closed position of the slider, the maximum force to be exerted on the detent in a direction perpendicular to Reference Plane Z and over a stroke of 0,65 mm shall be 0,5 N max.

Copyright International Organization for Standardization
Provided by IHS under license with ISO
No reproduction or networking permitted without license from IHS
Not for Resale

In the open position of the slider the holding force shall be 0,3 N min.

6.8.2 Access holes

The slider shall have two circular access holes (see section B-B) which, in the open position of the slider, allow penetration of the drive spindles into the hubs. The diameters of these access holes shall be

d_1 = 10,0 mm ± 0,2 mm

d_2 = 12,0 mm max.

6.8.3 Recognition, sub-datum and write-inhibit holes

The bottom half shall have a number of holes on an edge at its rear. This edge shall be defined by

L_{46} = 45,2 mm ± 0,2 mm

L_{47} = 49,2 mm ± 0,2 mm

The centres of these holes lie on a line perpendicular to Reference Plane Y at a distance from Reference Plane X of

L_{48} = 47,2 ± 0,2 mm

6.8.3.1 Recognition holes

There shall be four recognition holes numbered from 1 to 4 as shown in figure 10. Their position and dimensions shall be

d_3 = 2,5 mm ± 0,1 mm

L_{49} = 1,0 mm ± 0,1 mm

L_{50} = 56,0 mm ± 0,3 mm

L_{51} = 4,0 mm ± 0,1 mm

L_{52} = 1,0 mm ± 0,1 mm

L_{53} = 3,0 mm min.

All recognition holes shall have the cross-section shown in cross-section F-F in figure 11 for recognition hole No. 1

One of the two cross-sections F-F shows a recognition hole closed by means of a plug, the other shows it with the plug punched out. These plugs shall withstand an applied force of 0,5 N max. without being punched out.

This International Standard prescribes the following states of these holes:

Recognition holes No. 1 and No. 3 shall be closed
Recognition hole No. 2 shall be closed for Type A cartridges
Recognition hole No. 2 shall be open for Type B cartridges
Recognition hole No. 4 may be open or closed

Other combinations of the recognition holes 1, 2, and 3 are reserved for future applications (see annex B).

6.8.3.2 Write-inhibit hole

The position and dimensions of the write-inhibit hole shall be

d_4 = 2,5 mm ± 0,1 mm

L_{50} = 56,0 mm ± 0,3 mm

When the write-inhibit hole is open, recording on the tape is inhibited, when it is closed recording is enabled.

Copyright International Organization for Standardization
Provided by IHS under license with ISO
No reproduction or networking permitted without license from IHS
Not for Resale

The write-inhibit hole shall have the cross-section shown in cross-section F-F in figure 11 for recognition hole No. 1. One of the two cross-sections F-F shows the hole closed by means of a plug, the other shows it with the hole punched out. These plugs shall withstand an applied force of 0,5 N max without being punched out.

The case may have a movable element allowing to open and close the write-inhibit hole. If present, this element shall be such that the state of write-inhibit hole is visible (see figure 3 as an example). Such an element shall be neither broken nor moved by a force smaller than 0,5 N.

Regardless of whether a plug or a movable element is used to select the open and closed states of the write-inhibit hole, the following dimensions from cross-section F-F shall define the closed and open states, respectively.

L_{52} = 1,0 mm ± 0,1 mm

L_{53} = 3,0 mm min.

6.8.3.3 Sub-datum holes

These holes are used to position the cartridge in the drive. Their position and dimensions shall be as follows:

- The hole seen below the write-inhibit hole in figure 11 shall have an elongated form and the same cross-section E-E as shown for the other hole.

L_{54} = 45,5 mm ± 0,2 mm

$L_{55} = 3{,}5\ \text{mm}^{+0,1}_{-0,0}\ \text{mm}$

$L_{56} = 2{,}50\ \text{mm}^{+0,05}_{-0,00}\ \text{mm}$

- The position and dimensions of the other sub-datum hole shall be

$d_5 = 2{,}50\ \text{mm}^{+0,05}_{-0,00}\ \text{mm}$

d_6 = 1,0 mm min.

L_{57} = 5,5 mm ± 0,1 mm.

L_{58} = 2,0 mm min.

L_{59} = 1,2 mm min.

The edge of both sub-datum holes shall have a chamfer of

0,2 mm ± 0,1 mm.

6.8.4 Datum holes

The lower half has two datum holes also used to position the cartridge within the drive. One of them has an elongated form, the other is circular. Cross-section AD-D shown for the latter also applies to the former. Their position and dimensions shall be

L_{60} = 51,0 mm ± 0,1 mm

$L_{61} = 2{,}80\ \text{mm}^{+0,05}_{-0,00}\ \text{mm}$

$L_{62} = 3{,}5\ \text{mm}^{+0,1}_{-0,0}\ \text{mm}$

Copyright International Organization for Standardization
Provided by IHS under license with ISO
No reproduction or networking permitted without license from IHS
Not for Resale

L_{63} = 3,0 mm min.

$d_7 = 2{,}80\ \text{mm}\ ^{+\,0{,}05}_{-\,0{,}00}\ \text{mm}$

The upper edge of both datum holes shall have a chamfer of 0,2 mm ± 0,1 mm.

6.8.5 Access room for tape guides

When the cartridge is inserted into the drive, tape guides in the drive are pulling out the tape toward the heads of the drive. The shape and dimensions of the access room provided by the cartridge for these tape guides shall be (see also 6.8.7.5):

L_{64} = 3.1 mm max.

L_{65} = 5,6 mm min.

L_{66} = 11,0 mm max.

$L_{67} = 7{,}0\ \text{mm}\ ^{+\,0.7}_{-\,0{,}0}\ \text{mm}$

L_{68} = 6,7 mm min.

α = 45° ± 1°

L_{69} = 47,9 mm min.

$L_{70} = 3{,}30\ \text{mm}\ ^{+\,0{,}00}_{-\,0{,}15}\ \text{mm}$

6.8.6 Holes for accessing the hubs

The lower half has two holes through which the spindles of the drive can access the hubs when the slider is in the open position. The positions and dimensions of these holes shall be

d_8 = 9,0 mm ± 0,1 mm

L_{71} = 29,00 mm ± 0,15 mm

L_{72} = 10,5 mm ± 0,1 mm

L_{73} = 30,0 mm ± 0,1 mm

6.8.7 Internal structure of the lower half (figure 12)

In figure 12 the different elements of the inside of the lower half are shown. There shall be a locking mechanism for the hobs to prevent them from rotating when the lid is in the closed position. The design of this locking mechanism is not specified by this International Standard, thus it is not shown in figure 12. Locking and unlocking of the hubs shall depend upon the position of the lid as specified in 6.13.

6.8.7.1 Diameter of the wound tape

The diameter of the tape wound on a hub shall be

d_9 = 36,5 mm max.

6.8.7.2 Tape wind

The magnetic surface of the tape shall face outwards.

Copyright International Organization for Standardization
Provided by IHS under license with ISO
No reproduction or networking permitted without license from IHS
Not for Resale

6.8.7.3 Tape motion

The forward direction of tape motion is from the left side of the cartridge to its right side (see figures 1 and 2).

6.8.7.4 Guide posts

The tape shall pass around two guide posts in the cartridge, the axes of which are perpendicular to Reference Plane Z and passes through the centres of the datum holes. The position and dimensions of these guide posts shall be:

- their positions are determined by that of the centres of the datum holes,
- their cross-section shall be circular with a radius

$$R_4 = 3{,}0 \text{ mm} \pm 0{,}1 \text{ mm}$$

over an angle of 180° in clockwise sense starting at angle

$$\rho = 45° \pm 1°$$

- their cross-section over the other half of 180° is not specified by this International Standard.

6.8.7.5 Position of the tape in the case (view A)

When the tape runs from one guide post to the other it shall remain between two planes parallel to Reference Plane Z. The distance of these planes to Reference Plane Z shall be

L_{74} = 1,4 mm min.

L_{75} = 6,4 mm max.

The design centre for the position of the tape centreline is

L_{76} = 3,9 mm

The height of the access room specified in 6.8.5 for the tape guides shall be

$$L_{77} = 8{,}0 \text{ mm}^{+0{,}6}_{-0{,}0} \text{ mm}$$

6.8.7.6 Tape path zone

When the cartridge is inserted into the drive, the tape is pulled outside the case by tape guides as mentioned above. It is then no longer in contact with the guide posts. The tape path zone of the case is the zone in which the tape must be able to move freely. This zone is defined by

L_{78} = 5,5 mm ± 0,1 mm

L_{79} = 56,5 mm ± 0,3 mm

L_{80} = 8,0 mm ± 0,2 mm

6.8.8 Light path (figure 12)

As specified in 6.7 there is a lower window in the right and left sides of the case through which light having passed through the tape can pass and fall on a detector of the drive. In order to ensure that the corresponding light path is not obstructed by inner elements of the case, its configuration in this zone shall be as follows:

The position and dimension of the lower window are specified by L_{30} and L_{31} (see figure 9). The dimensions

L_{81} = 1,5 mm max.

L_{82} = 5,0 mm min.

ensure that no elements of the case obstruct the light path.

Copyright International Organization for Standardization
Provided by IHS under license with ISO
No reproduction or networking permitted without license from IHS
Not for Resale

6.8.9 Support areas (figure 13)

When the cartridge is inserted into the drive and held in position by forces perpendicular to Reference Plane Z acting on the holding areas (see 6.4), it shall be supported by three supporting areas A', B' C' on its bottom side, shown shaded in figure 13. The position and dimensions of these areas shall be as follows:

- Areas A' and B' are not specified by this International Standard because they depend on parts of the lower half for which this International Standard does not specify requirements.
- Area C' shall be defined by

  L_{83} = 1,0 mm ± 0,1 mm

  L_{84} = 49,0 mm ± 0,3 mm

6.8.10 Datum areas (figure 13)

There shall be two annular datum surfaces A and B and one circular such surface C. All three datum areas shall lie in Reference Plane Z. Their position and dimensions shall be:

- Datum area A shall be centred on the intersection of Reference Planes X, Y, and Z, its inner diameter shall be d_7 (see 6.8.4 and figure 11), its outer diameter shall be

  d_{10} = 5,0 mm ± 0,1 mm

- Datum area B shall be centred on the intersection of Reference Planes X and Z at a distance L_{60} (see 6.8.4 and figure 11) from the centre of datum area A. Its inner dimensions shall be L_{61} and L_{62}, its outer diameter shall be d_{10}.
- Datum area C shall be centred on a point defined by

  L_{85} = 42,0 mm ± 0,3 mm

  L_{86} = 25,5 mm ± 0,3 mm

Its diameter shall be d_{10}.

6.8.11 Relationship between support and datum areas and Reference Plane Z (figure 14)

Support area A' shall be coplanar with datum area A within 0,1 mm.

Support area B' shall be coplanar with datum area B within 0,1 mm.

Support area C' shall be parallel to Reference Plane Z within 0,1 mm. It shall be at a distance

L_{87} = 1,10 mm ± 0,05 mm

from Reference Plane Z.

6.9 Hubs (figures 15, 16)

The dimensions of the hub shall be

$d_{11} = 6{,}60\ \text{mm}^{+0{,}08}_{-0{,}00}\ \text{mm}$

$d_{12} = 8{,}8\ \text{mm}^{+0{,}0}_{-0{,}1}\ \text{mm}$

d_{13} = 15,00 mm ± 0,05 mm

β = 60° ± 1°

Copyright International Organization for Standardization
Provided by IHS under license with ISO
No reproduction or networking permitted without license from IHS
Not for Resale

$\gamma = 45° \pm 1°$

$L_{88} = 2{,}5\ \text{mm}^{+0,1}_{-0,0}\ \text{mm}$

$L_{89} = 2{,}60\ \text{mm}^{+0,20}_{-0,00}\ \text{mm}$

The two cylindrical surfaces with diameters d_{11} and d_{13} shall be co-axial within 0,05 mm.

The torque necessary to rotate the hub with a partially or fully wound tape shall be 0,0002 N·m max.

6.10 Leader and trailer attachment

The material of the leader and trailer and their attachment to the hubs and to the tape shall be such that when subjected to a force of 5 N max. they will neither break nor be detached from the hubs or the tape.

6.11 Interface between the hubs and the drive spindles (figure 17)

The interface between the hubs and the spindles shown in figure 17 in cross-section is specified in terms of the following relationships:

$d_{15} - d_{14} = \begin{matrix}\text{1,2 mm max.}\\ \text{1,0 mm min.}\end{matrix}$

$L_{91} - L_{90} = 1{,}3\ \text{mm max.}$

NOTE 7 - It is expected that the top of the drive spindle will not penetrate within the hub beyond a distance L_d = 7,65 mm max above Reference Plane Z.

6.12 Opening of the lid (figure 18)

When the lid is opened its lower front edge moves along an arc of a circle with radius

$R_5 = 9{,}6\ \text{mm} \pm 0{,}2\ \text{mm}$

The centre of rotation is defined by L_{17} and L_{21}. The end position of the lid, i.e. when it is fully open, is defined by

$L_{92} = 10{,}9\ \text{mm} \pm 0{,}2\ \text{mm}$

$L_{93} = 0{,}3\ \text{mm} \pm 0{,}1\ \text{mm}$

$L_{94} = 6{,}3\ \text{mm} \pm 0{,}2\ \text{mm}$

The force F required to open the lid shall not exceed 1,2 N. It shall be applied at a distance

$L_{95} = 5{,}0\ \text{mm} \pm 0{,}1\ \text{mm}$

measured parallel to Reference Plane Z from centre of rotation of radius R_5 (see also annex C).

6.13 Release of the hub locking mechanism (figures 19, 20)

As mentioned in 6.8.7 the design of the locking mechanism for the hubs is not specified by this International Standard, except that it shall be connected to the lid so that the hubs are locked or unlocked as a function of the angular position of the lid.

When the lid rotates from the closed to the open position (clockwise as seen in figures 19, 20) the hubs shall remain locked as long as the lid has not reached the position defined by

$L_{96} = 7{,}0\ \text{mm}$

$L_{97} = 7{,}5\ \text{mm} \pm 0{,}2\ \text{mm}$

Copyright International Organization for Standardization
Provided by IHS under license with ISO
No reproduction or networking permitted without license from IHS
Not for Resale

The hubs shall be completely released as soon as the lid has reached the position defined by

L_{98} = 10,3 mm

L_{99} = 6,6 mm ± 0,2 mm

6.14 Label areas (figures 21, 22)

On top and rear sides of the case there shall be an area on which adhesive labels can be placed. The dimensions of these areas shall be

L_{100} = 28,9 mm max.

L_{101} = 5,2 mm min.

L_{102} = 43,4 mm max.

L_{103} = 39,4 mm max.

L_{104} = 8,8 mm max.

R_6 = 0,5 mm min.

Copyright International Organization for Standardization
Provided by IHS under license with ISO
No reproduction or networking permitted without license from IHS
Not for Resale

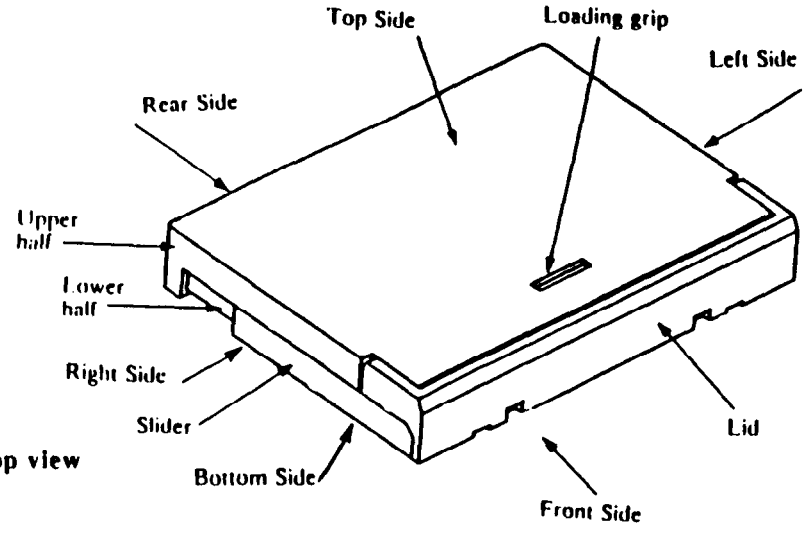

Figure 1 - Top view

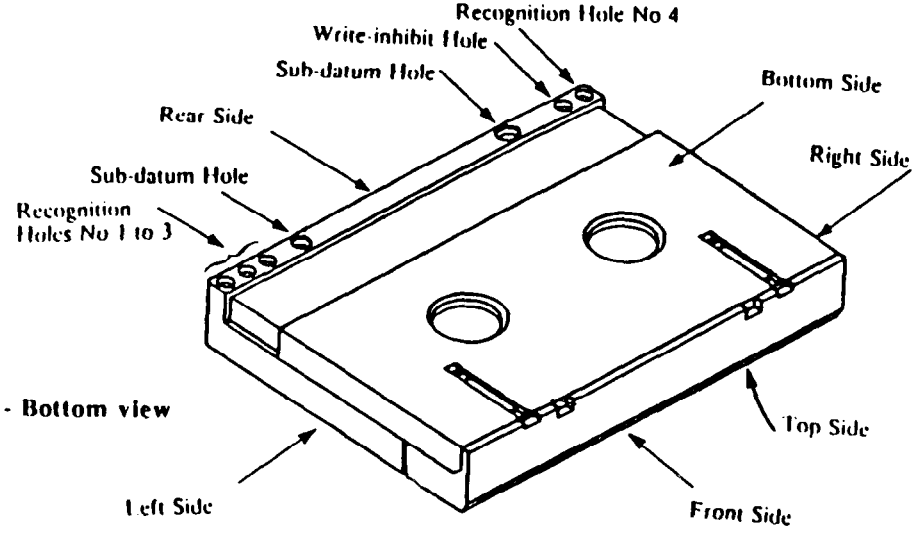

Figure 2 - Bottom view

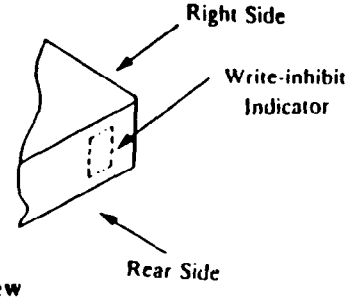

Figure 3 - Partial view of the rear side

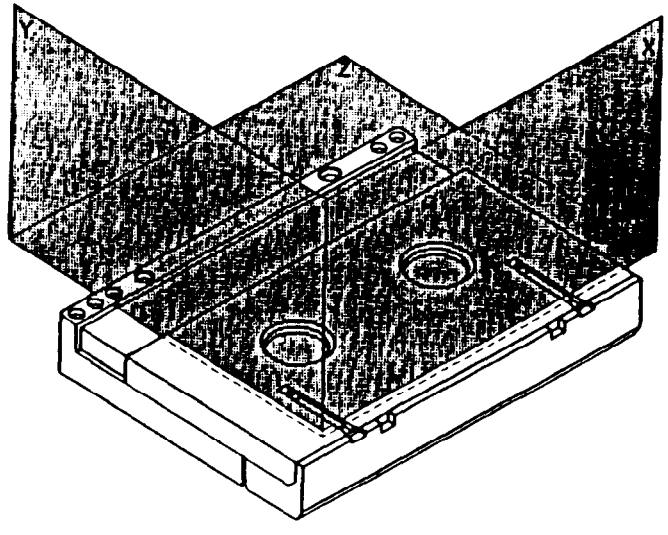

Figure 4 - Reference Planes X, Y, Z

Copyright International Organization for Standardization
Provided by IHS under license with ISO
No reproduction or networking permitted without license from IHS

Not for Resale

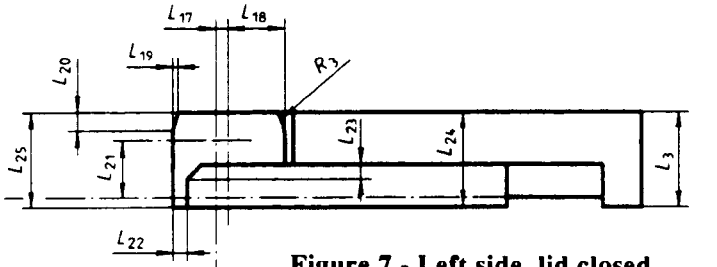

Figure 7 - Left side, lid closed

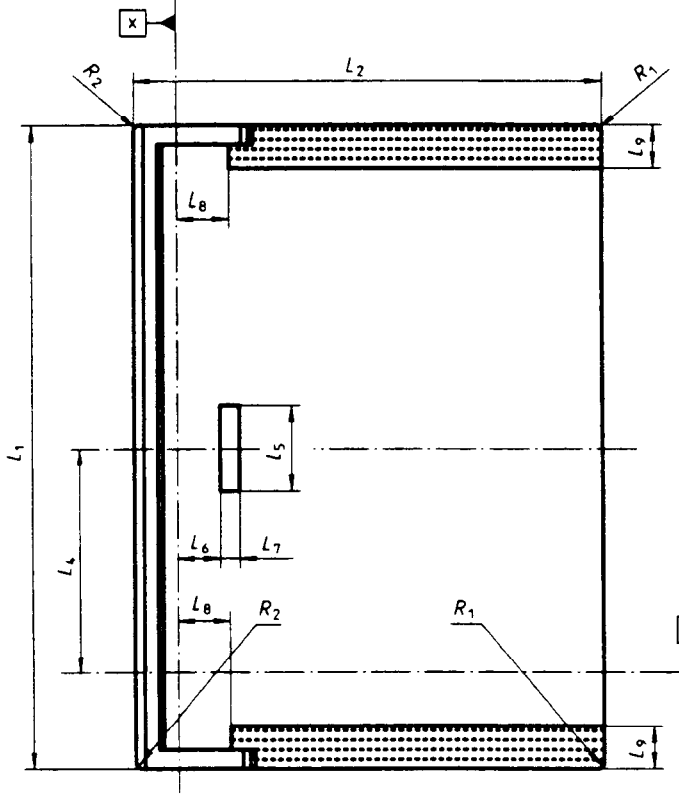

Figure 6 - Top side, lid closed

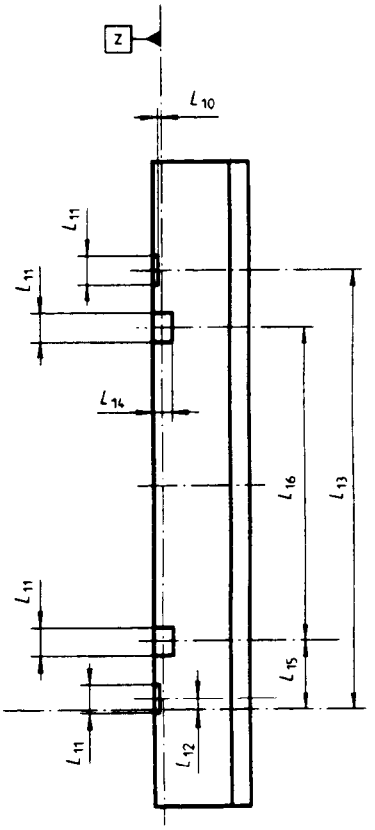

Figure 5 - Front side, lid closed

Copyright International Organization for Standardization
Provided by IHS under license with ISO
No reproduction or networking permitted without license from IHS
Not for Resale

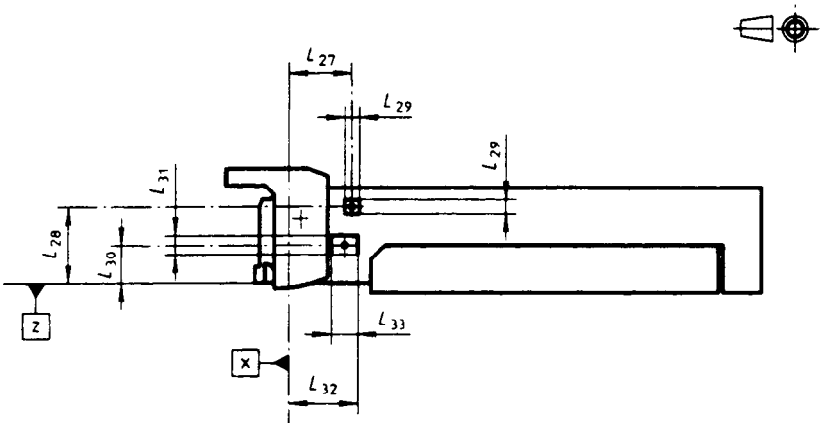

Figure 9 - Left side, lid open

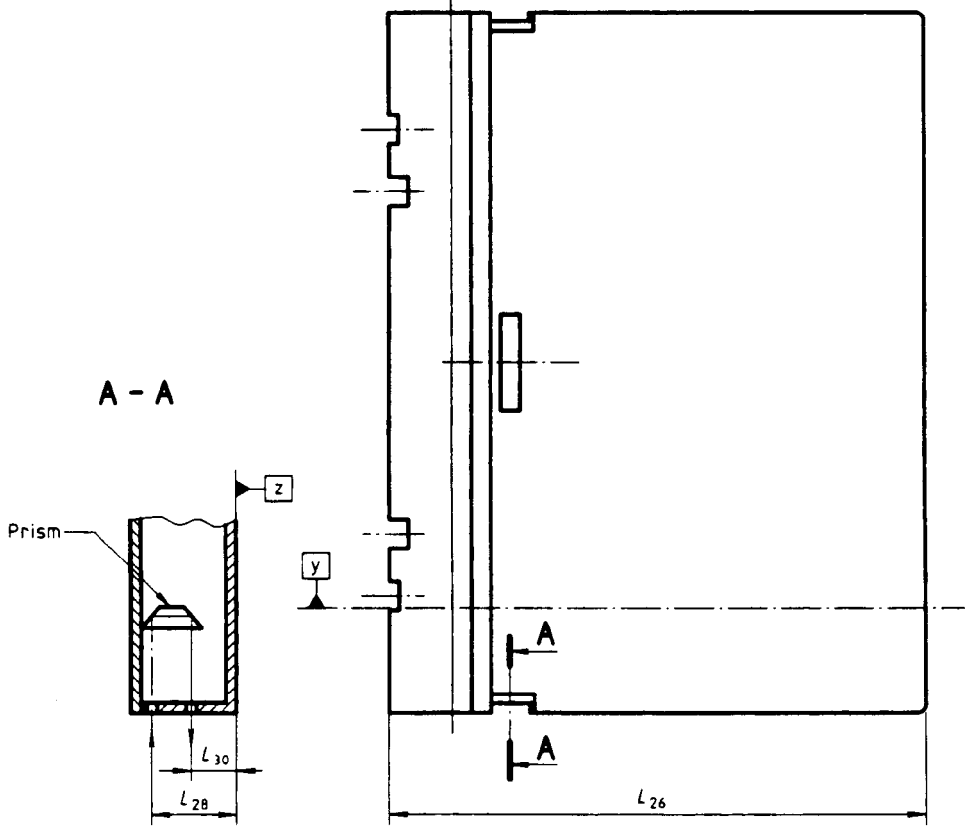

Figure 8 - Top side, lid open

Copyright International Organization for Standardization
Provided by IHS under license with ISO
No reproduction or networking permitted without license from IHS
Not for Resale

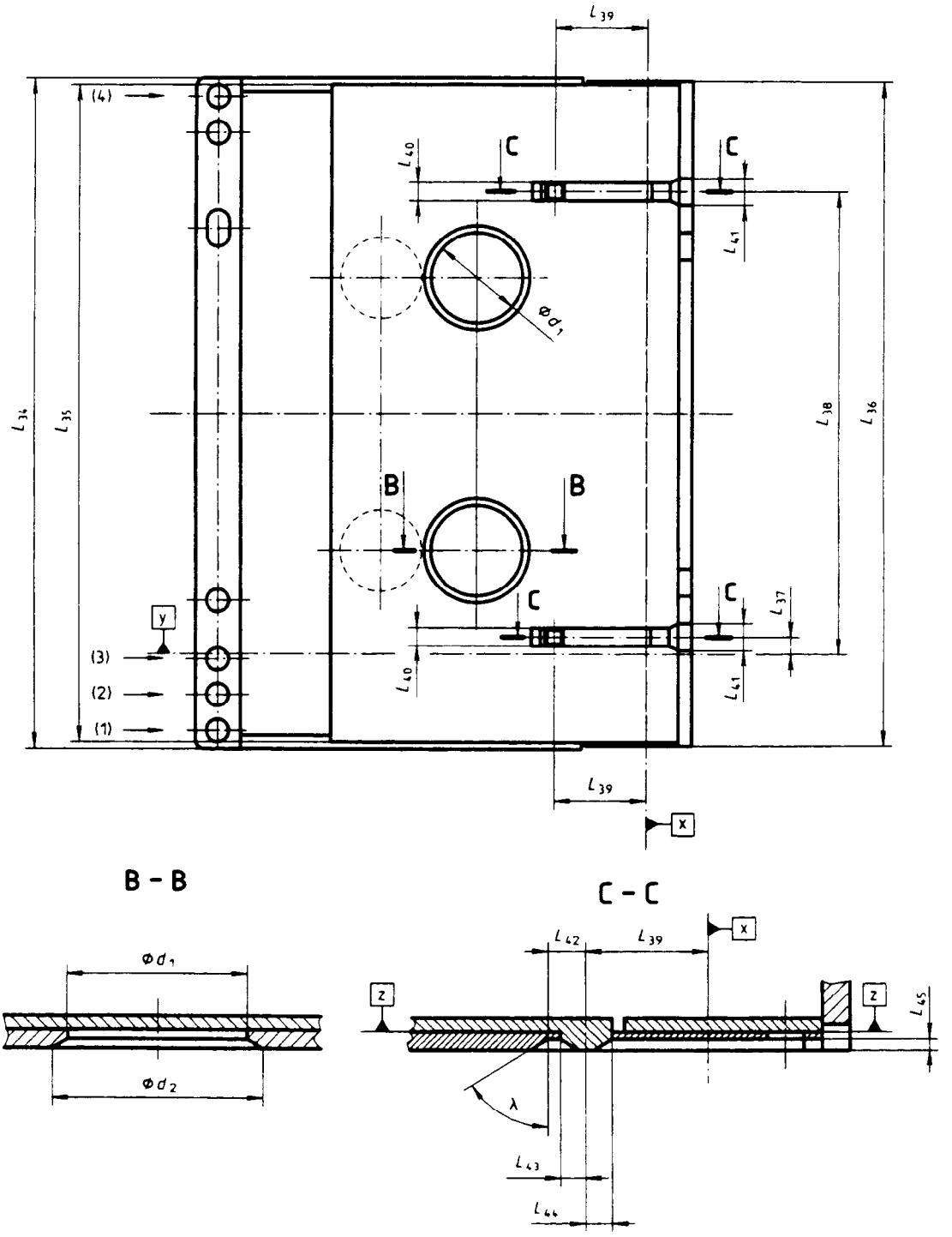

Figure 10 - Bottom side, lid closed

Copyright International Organization for Standardization
Provided by IHS under license with ISO
No reproduction or networking permitted without license from IHS
Not for Resale

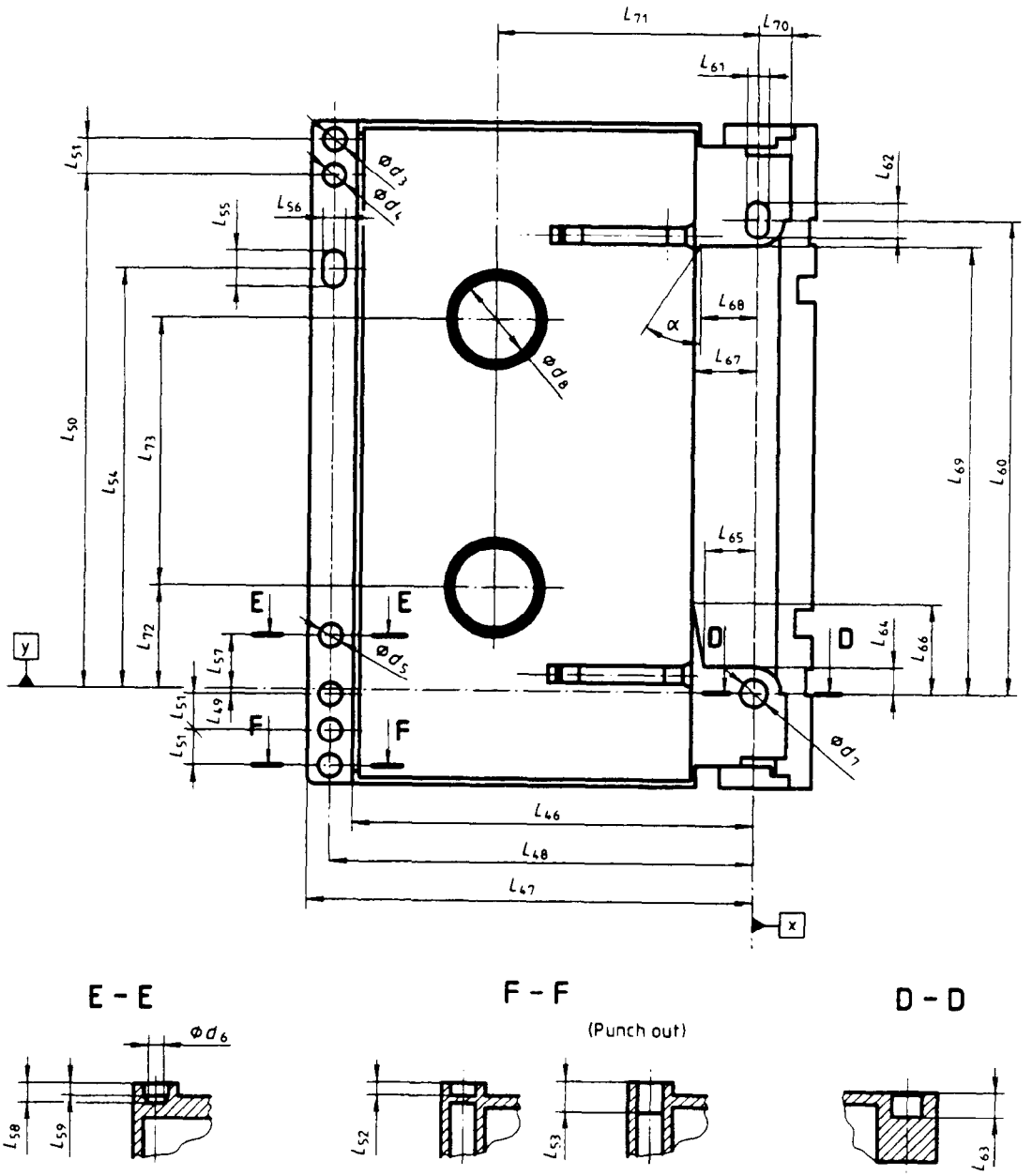

Figure 11 - Bottom side, lid open

Copyright International Organization for Standardization
Provided by IHS under license with ISO
No reproduction or networking permitted without license from IHS
Not for Resale

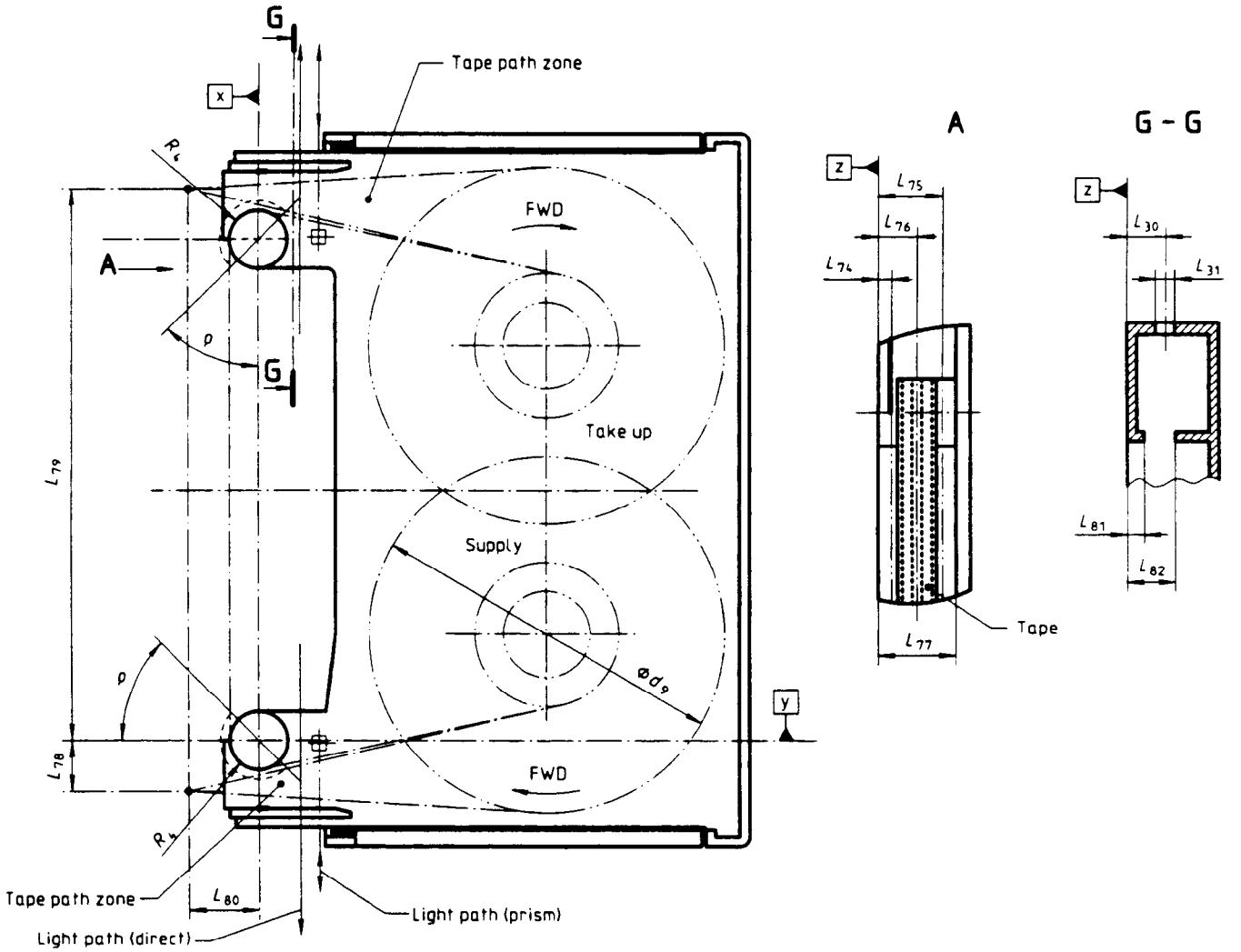

Figure 12 - Inside view of the lower half

Copyright International Organization for Standardization
Provided by IHS under license with ISO
No reproduction or networking permitted without license from IHS
Not for Resale

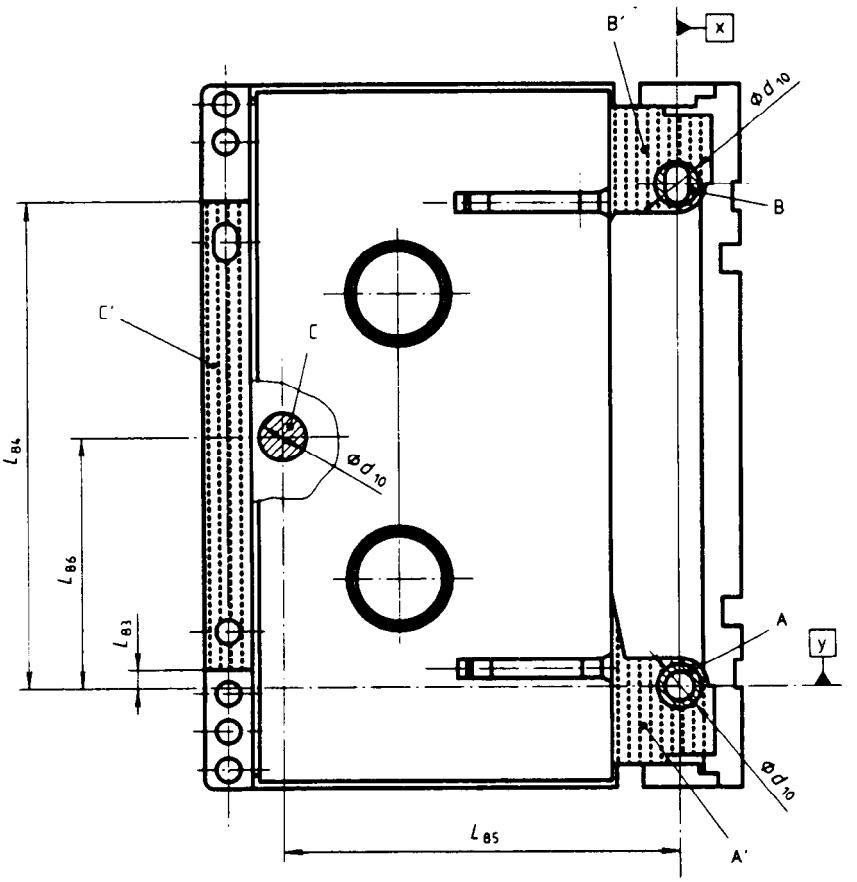

Figure 13 - Bottom side, lid and slider in open position

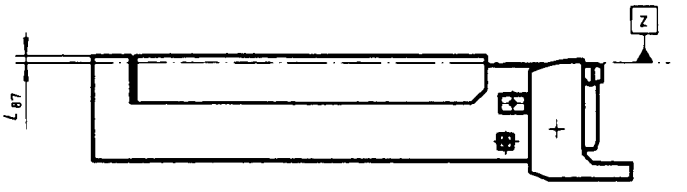

Figure 14 - Left side, lid open

Copyright International Organization for Standardization
Provided by IHS under license with ISO
No reproduction or networking permitted without license from IHS
Not for Resale

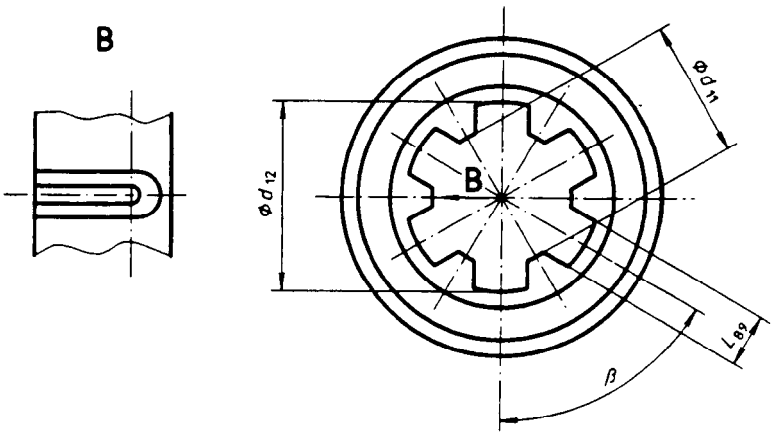

Figure 15 - Top view of a hub

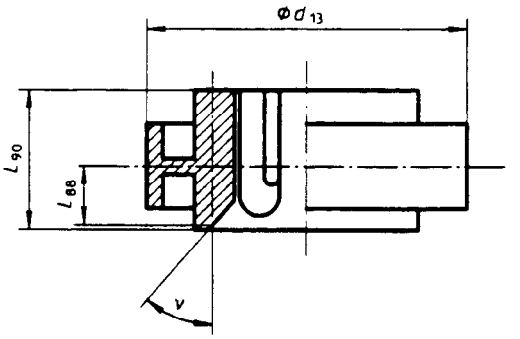

Figure 16 - Side view of a hub

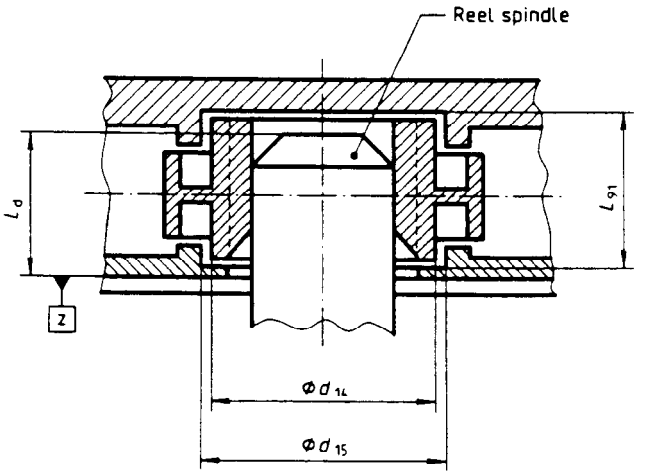

Figure 17 - Interface with the drive spindle

Copyright International Organization for Standardization
Provided by IHS under license with ISO
No reproduction or networking permitted without license from IHS
Not for Resale

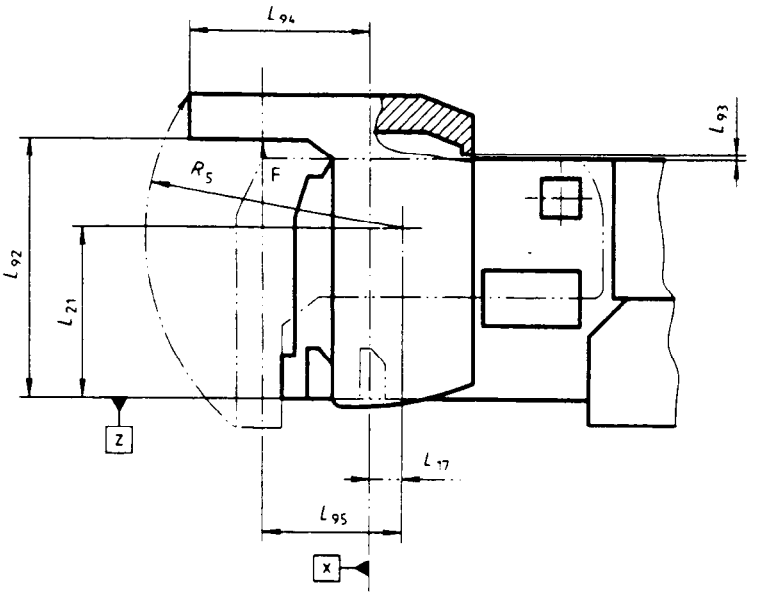

Figure 18 - Lid in completely open position

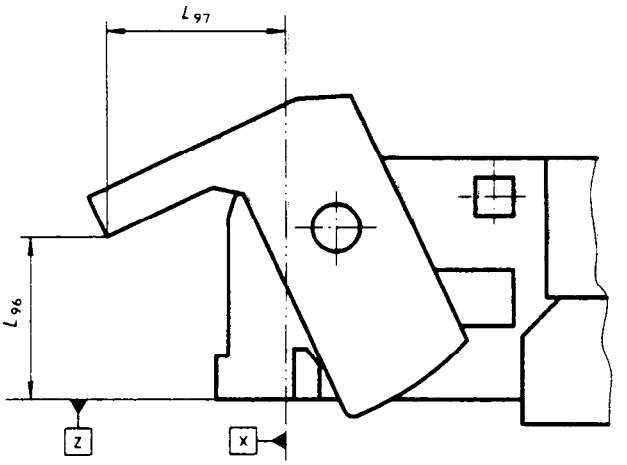

Figure 19 - Extreme position of the lid for which the hubs are still locked

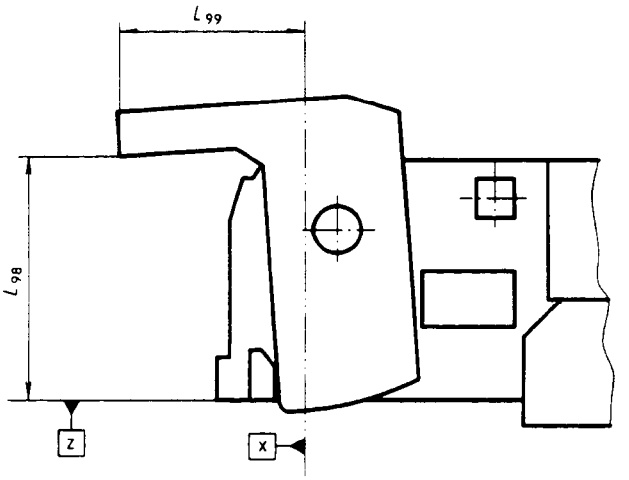

Figure 20 - Minimum position of the lid for which the hubs are completely unlocked

Copyright International Organization for Standardization
Provided by IHS under license with ISO
No reproduction or networking permitted without license from IHS
Not for Resale

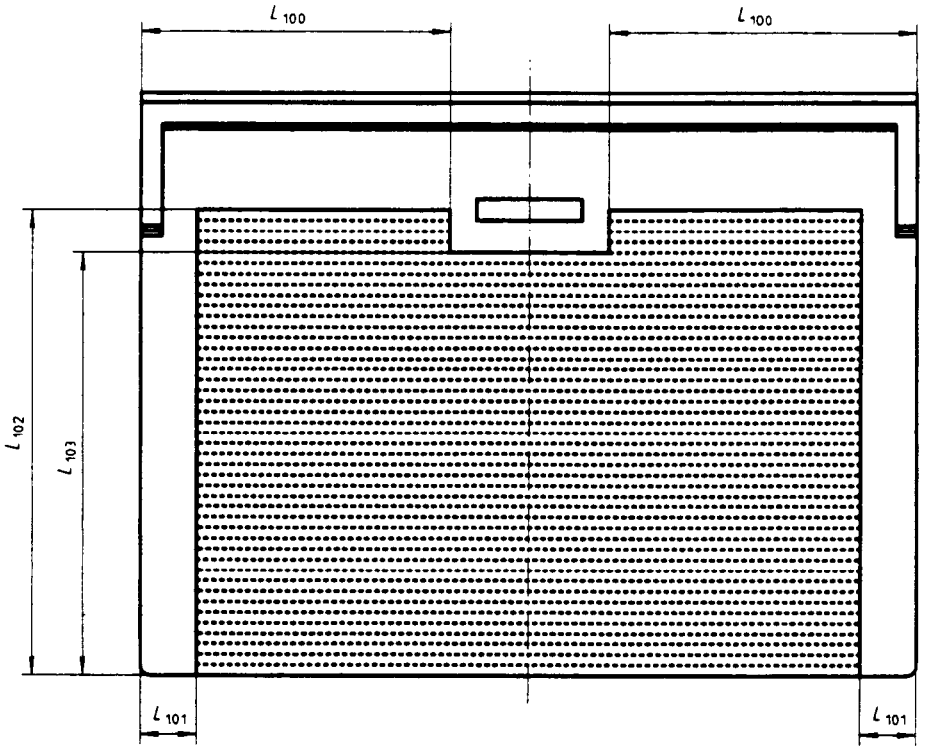

Figure 21 - Top side, label area

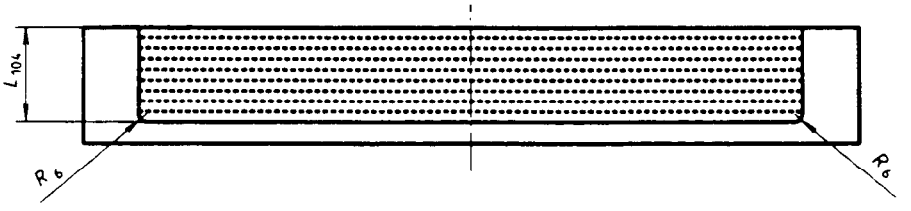

Figure 22 - Rear side, label area

Copyright International Organization for Standardization
Provided by IHS under license with ISO
No reproduction or networking permitted without license from IHS
Not for Resale

Section 3 - Requirements for the unrecorded tape

7 Mechanical, physical and dimensional characteristics of the tape

7.1 Materials

The recordable area of the tape shall consist of a base material (oriented polyethylene terephthalate or its equivalent) coated on one side with a strong yet flexible layer of ferromagnetic material. The back surface may be coated.

The leader and trailer tapes shall consist of a translucent length of the same or equivalent base material without the ferromagnetic coating or the back coating.

7.2 Tape length

7.2.1 Length of magnetic tape

The length of tape between PBOT and PEOT shall be

- For Type A: between 3,0 m and 60,5 m
- For Type B: between 3,0 m and 92,0 m

7.2.2 Length of leader and trailer tapes

The length of the leader and trailer tapes shall be 60 mm ± 5 mm.

7.3 Tape width

The width of the magnetic tape and of the leader and trailer tapes shall be

$$3{,}81\ \text{mm}\ {}^{+\,0{,}00}_{-\,0{,}02}\ \text{mm}$$

The width shall be measured across the tape from edge to edge when the tape is under a tension of 0,18 N max.

7.4 Discontinuities

Between PBOT and PEOT there shall be no discontinuities such as those produced by tape splicing or perforations.

7.5 Total thickness

The total thickness of the magnetic tape at any point shall be

- For Type A: 13 µm ± 1 µm
- For Type B: 9,0 µm ± 0,8 µm

7.6 Longitudinal curvature

The radius of the curvature of the edge of the tape shall not be less than 33 m.

Procedure

Allow a 1 m length of tape to unroll and assume its natural curvature on a flat smooth surface. Measure the deviation from a 1 m chord. The deviation shall not be greater than 3,8 mm. This deviation corresponds to the minimum radius of curvature of 33 m if measured over an arc of a circle.

7.7 Cupping

The departure across the width of tape from a flat surface shall not exceed 0,5 mm.

Copyright International Organization for Standardization
Provided by IHS under license with ISO
No reproduction or networking permitted without license from IHS
Not for Resale

Procedure

Cut a 1,0 m ± 0,1 m length of tape. Condition it for a minimum of 3 hours in the test environment by hanging it so that the coated surface is freely exposed to the test environment. From the centre of the conditioned tape cut a test piece of length 25 mm approximately. Stand the test piece on its end in a cylinder which is at least 25 mm high with an inside diameter of 4,1 mm ± 0,2 mm. With the cylinder standing on an optical comparator measure the cupping by aligning the edges of the test piece to the reticule and determine the distance from the aligned edges to the corresponding surface of the test piece at its centre.

7.8 Coating adhesion

The force required to peel any part of the coating from the tape base material shall not be less than 0,05 N.

Procedure

Take a test piece of the tape approximately 380 mm long and scribe a line through the recording coating across the width of the tape 125 mm from one end. Using a double-sided pressure sensitive tape, attach the full width of the test piece to a smooth metal plate, with the recording surface facing the plate. Fold the sample over 180°, attach the metal plate and the free end of the test piece to the jaws of a tensometer and set the speed of the jaw separation to 254 mm per min. Note the force at which any part of the coating first separates from the base material. If this is less than 0,05 N, the test has failed. If the test piece peels away from the double-sided pressure sensitive tape before the force exceeds 0,05 N, an alternative type of double-sided pressure sensitive tape shall be used. If the back surface of the tape is coated, repeat a) to d) for the back coating

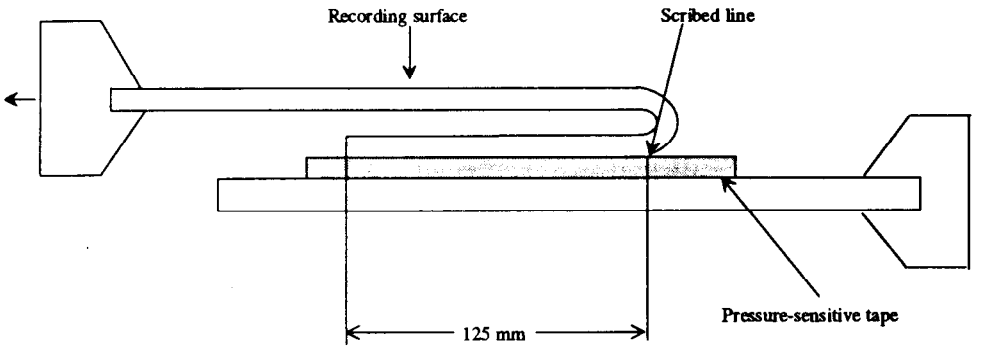

Figure 23 - Setup for measuring coating adhesion

7.9 Layer-to-layer adhesion

Procedure

Attach one end of a test piece of magnetic tape of length 1 m to the surface of a glass tube of external diameter 36 mm.

Wind the tape on to the tube at a tension of 1,1 N.

Store the wound test piece in a temperature of 45 °C ± 3 °C and relative humidity of 80 % for 4 h.

Store for a further 24 h in the Testing Environment.

Copyright International Organization for Standardization
Provided by IHS under license with ISO
No reproduction or networking permitted without license from IHS
Not for Resale

Apply a 0,1 N force to the free end of the test piece and allow it to unwind slowly.

There shall be no tendency for the test piece to stick or for the coating to peel.

7.10 Tensile Strength

Measurements shall be made in accordance with ISO/R 527. The length of the test sample shall be 200 mm. The rate of elongation for all tensile tests shall be 100 mm/m - ISO/R 527, Rate D.

7.10.1 Breaking Strength

Load the test piece until the breaking point is reached. The force required to reach that point is defined as the breaking strength of the tape.

The Breaking Strength shall be

- For Type A: not less than 9 N
- For Type B: not less than 6 N

7.10.2 Yield Strength

The Yield Strength is the force necessary to produce 3 % elongation of the tape.

The Yield Strength shall be

- For Type A: greater than 1,4 N
- For Type B: greater than 0,9 N

7.11 Residual elongation

Measure the original length of a test piece of approximately 1 m with an applied tension force of 0,05 N.

Apply for 3 minutes an additional force of

- For Type A: 1,5 N
- For Type B: 1,0 N

Remove the additional force and measure the length after a further 3 min.

The residual elongation, expressed as a percentage of the original length shall be less than 0,03 %.

7.12 Electrical resistance of coated surfaces

The electrical resistance of any square area of the recording surface shall be within the range of

10^5 Ω to 5 x 10^8 Ω for non-back coated tape.

10^5 Ω to 5 x 10^{12} Ω for back-coated tape.

The electrical resistance of the backcoating shall be less than

9 x 10^8 Ω

Procedure

Condition a test piece of tape in the test environment for 24 hours. Position the test piece over two 24-carat gold-plated, semicircular electrodes having a radius R = 10 mm and a finish of at least N4, so that the recording surface is in contact with each electrode (see figure 24). The electrodes shall be placed parallel to the ground and parallel to each other and spaced d = 3,81 mm apart. Apply a force F of 0,25 N to each end of the test piece. Apply a d.c. voltage of 100 V ± 10 V across the electrodes and measure the resulting current flow. From this value, determine the electrical resistance.

Repeat for a total of five positions along the test piece and average the five resistance readings.

Copyright International Organization for Standardization
Provided by IHS under license with ISO
No reproduction or networking permitted without license from IHS
Not for Resale

For back-coated tape, repeat the procedure with the backcoating in contact with the electrodes.

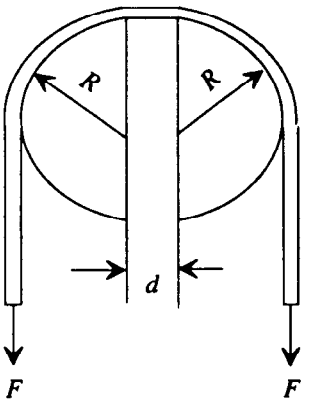

Figure 24 - Setup for measuring the electrical resistance

When mounting the test piece ensure that no conducting paths exist between the electrodes except that through the coating under test.

NOTE 8 - Particular attention should be given to keeping surfaces clean.

7.13 Light transmittance of tape

The light transmittance of the magnetic tape shall be less than, or equal to, 5 %.

The light transmittance of leader and trailer tapes shall be equal to, or greater than, 60 %.

The method for measuring light transmittance is given in annex D.

8 Magnetic recording characteristics

The magnetic recording characteristics shall be defined by the testing requirements given below.

When performing these tests, the output or resultant signal shall be measured on the same relative pass for both a tape calibrated to the Master Standard Reference Tape and the tape under test (read-while-write or first forward-read-pass) on the same equipment.

The following conditions shall apply to the testing of all magnetic recording characteristics, unless otherwise stated.

tape condition	: a.c. erased
diameter of the scanner	: $30{,}00\ ^{+0{,}05}_{-0{,}00}$ mm
rotational speed of scanner	: 2000,0 rpm ± 0,2 rpm
tape speed	: 8,15 mm/s ± 0,04 mm/s
tape tension	: 0,10 N ± 0,01 N, measured at the input to the scanner
test tracks	: positive azimuth

Copyright International Organization for Standardization
Provided by IHS under license with ISO
No reproduction or networking permitted without license from IHS
Not for Resale

write gap length	: 0,25 µm ± 0,03 µm
physical recording densities	: 83,4 ftpmm, 750,6 ftpmm, 500,4 ftpmm, 1 000 ftpmm, 1 501 ftpmm, 3 002 ftpmm (specified in each test).
recording current	: Test Recording Current
recording waveform	: square wave
read track width	: 20 µm ± 2 µm
write track width	: equal to, or greater than, the read track width
read output level	: taken at the appropriate fundamental frequency only

8.1 Optimum recording field

The optimum recording field shall be between 80 % and 126 % of the Reference Recording Field.

Traceability to the Reference Recording Field is provided by the calibration factor supplied with each Secondary Standard Reference Tape.

8.2 Signal amplitude

The Average Signal Amplitude at the physical recording density of 3 002 ftpmm shall be between 70 % and 160 % of that for the Master Standard Reference Tape.

The Average Signal Amplitude at the physical recording density of 83,4 ftpmm shall be between 70 % and 160 % of that for the Master Standard Reference Tape.

Traceability to the Average Signal Amplitudes of the Master Standard Reference Tape is provided by the calibration factors supplied with each Secondary Standard Reference Tape.

8.3 Resolution

The ratio of the Average Signal Amplitude at the physical recording density of 3 002 ftpmm to that at the physical recording density of 750,6 ftpmm shall be between 80 % and 140 % of the same ratio for the Master Standard Reference Tape.

For the physical recording densities of 1 001 ftpmm and 83,4 ftpmm the ratio shall be between 70 % and 126 % of the same ratio for the Master Standard Reference Tape.

Traceability to the resolutions for the Master Standard Reference Tape is provided by the calibration factors supplied with each Secondary Standard Reference Tape.

8.4 Overwrite

Overwrite is the ratio of the Average Signal Amplitude of the residual of a low density recording after overwriting with a recording at a higher density to the Average Signal Amplitude of the original low density recording.

Traceability to the overwrite ratios for the Master Standard Reference Tape is provided by the calibration factors supplied with each Secondary Standard Reference Tape.

8.4.1 Physical recording densities of 750,6 and 3 002 ftpmm

8.4.1.1 Procedure

First, a.c. erase the tape.

Record at the physical recording density of 750,6 ftpmm and measure the Average Signal Amplitude.

Copyright International Organization for Standardization
Provided by IHS under license with ISO
No reproduction or networking permitted without license from IHS
Not for Resale

Overwrite at the physical recording density of 3 002 ftpmm and measure the Average Signal Amplitude of the residual 750,6 ftpmm signal.

Repeat for the Master Standard Reference Tape.

8.4.1.2 Requirements

The ratio

$$\frac{\text{Residual Average Signal Amplitude at 750,6 ftpmm after overwriting}}{\text{Average Signal Amplitude of the original recording at 750,6 ftpmm}}$$

shall be less than 140 % of the same ratio for the Master Standard Reference Tape.

8.4.2 Physical recording densities of 83,4 ftpmm and 1 001 ftpmm

8.4.2.1 Procedure

Repeat 8.4.1.1 for these densities.

8.4.2.2 Requirements

The ratio shall be less than 126 % of the same ratio for the Master Standard Reference Tape.

Traceability to the overwrite ratios for the Master Standard Reference Tape is provided by the calibration factors supplied with each Secondary Standard Reference Tape.

8.5 Ease of erasure

When a tape has been recorded at 750,6 ftpmm with the Test Recording Current and then passed through a longitudinal steady erasing field of 198 900 A/m, any remaining signal shall not exceed 3 % of the Standard Reference Amplitude for that density. The erasing field shall be reasonably uniform, for example, the field in the middle of a solenoid. This measurement shall be made with a band pass filter passing the first three harmonics.

8.6 Tape quality

8.6.1 Missing pulses

A missing pulse is a loss of read signal amplitude. A missing pulse exists when the base-to-peak read signal is 50 %, or less, of half the Average Signal Amplitude for the recording density of 1 501 ftpmm on the same tape.

8.6.2 Missing pulse zone

A missing pulse zone commences with a missing pulse and ends when 5 consecutive flux transitions are detected or when a length of 0,120 mm of track has been measured. Any further missing pulse results in a further missing pulse zone.

A missing pulse zone does not continue from one track to the next.

The missing pulse zone rate shall be less than one in $7{,}2 \times 10^4$ flux transitions and applies to both positive and negative azimuth tracks.

8.7 Signal-to-noise ratio (S/N) characteristic

The signal-to-noise ratio is the average rms read signal amplitude divided by the average integrated rms noise amplitude, and expressed in decibels.

Copyright International Organization for Standardization
Provided by IHS under license with ISO
No reproduction or networking permitted without license from IHS
Not for Resale

$$S/N = 20 \log \frac{\text{Average rms read signal amplitude}}{\text{Average integrated rms noise amplitude}} \text{ decibels}$$

Requirement

The S/N for the tape under test (S/N_{tape}) shall be better than -3 dB relative to the S/N for the Master Standard Reference Tape (S/N_{MSRT}) when measured according to the procedure defined in annex E.

Traceability to the S/N_{MSRT} is provided by the calibration factor supplied with each Secondary Standard Reference Tape.

Section 4 - Format

9 DATA/DAT-DC format

9.1 General

Data to be recorded is sent from a host computer to the tape system together with three types of separator marks which indicate the logical separation(s) of the data. The user data, separator marks, and associated information are formed into groups before being recorded on the tape. Each group is recorded on a group of tracks. The part of each track in which the user data and partition information are recorded is called the Main Zone of the track. Additional information about the contents of the group, the location of the track(s) and the contents of the track(s) is recorded in two parts of each track called Sub Zones. The two Sub Zones together constitute the Sub Data Area of the track.

In addition, the host computer may send Partition Reference information which contains information related to the partition being written, including Protection, Number, Name, Flags, Start Frame Number, Number of Frames, Number of Groups, Start Group Number, Start Second Group Number, and Comments. This information is formed into a group and recorded on the tape in the Partition and Master Reference areas.

In the following description all operations on the data received from the host computer, including the use of error detection and correction codes, are described. Then the method of recording on the tape and the tape layout itself will be described. However, because of the inherent characteristics of this format, where required, advance references to the tape layout will also be made in the course of the description of the operations on the data.

9.2 Basic Groups

The data to be recorded shall be grouped in Basic Groups of 135 808 bytes for the Group Field 0 (see 14.1) or 238 596 bytes for Group Format 1 (see 14.2). Each Basic Group shall be identified by a running number allocated consecutively starting with 0. In each Basic Group the bytes are identified by a running number from 0 to 135 807 or from 0 to 238 595.

Data and Separator Marks received from the host computer shall be grouped in Basic Groups according to the following structure.

NOTE 9 - In this International Standard, there are three types of Separator Marks which can be received from the host, and are referred to as Separator 1, Separator 2, and Separator 3. Some other standards, e.g. those which define an interface between a tape drive and a host computer, use terms such as "search mark", "file mark", and "set mark". It is recommended that Separator 1 be equated to "search mark", Separator 2 be equated to "file mark", and Separator 3 be equated to "set mark".

9.2.1 Basic Groups for Group Format 0

Each Basic Group shall consist of user data and system data. User data shall consist of 131 072 bytes and system data of 4 736 bytes. User data and system data shall be mapped into a rectangular area which is (4 096 + 148) bytes wide and 32 bytes high. Each byte is allocated to a byte position (or offset address, see annex M) as follows:

Copyright International Organization for Standardization
Provided by IHS under license with ISO
No reproduction or networking permitted without license from IHS
Not for Resale

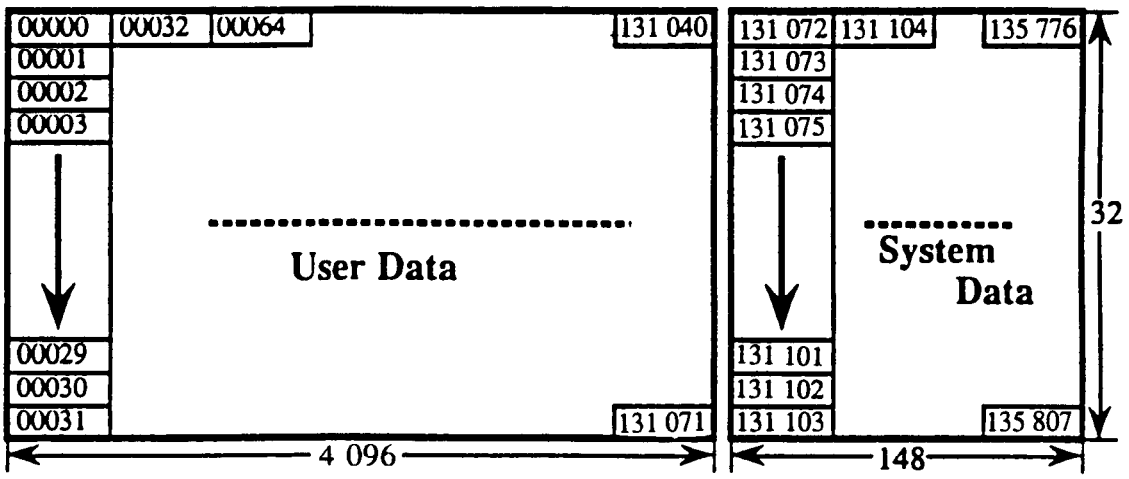

Figure 25 - Data allocation for Group Format 0

User data and system data of each Basic Group shall be further divided into Sub-groups as follows:

- Sub-groups containing each 5 760 bytes from the Basic Group,
- Sub-group containing 3 328 bytes from the Basic Group and 2 432 bytes C3 Parity generated by the tape system (see annex M),
- Sub-groups containing each 5 760 bytes of C3 parity,
- Sub-group containing 5 752 bytes of C3 parity and 8 bytes set to all ZEROs.

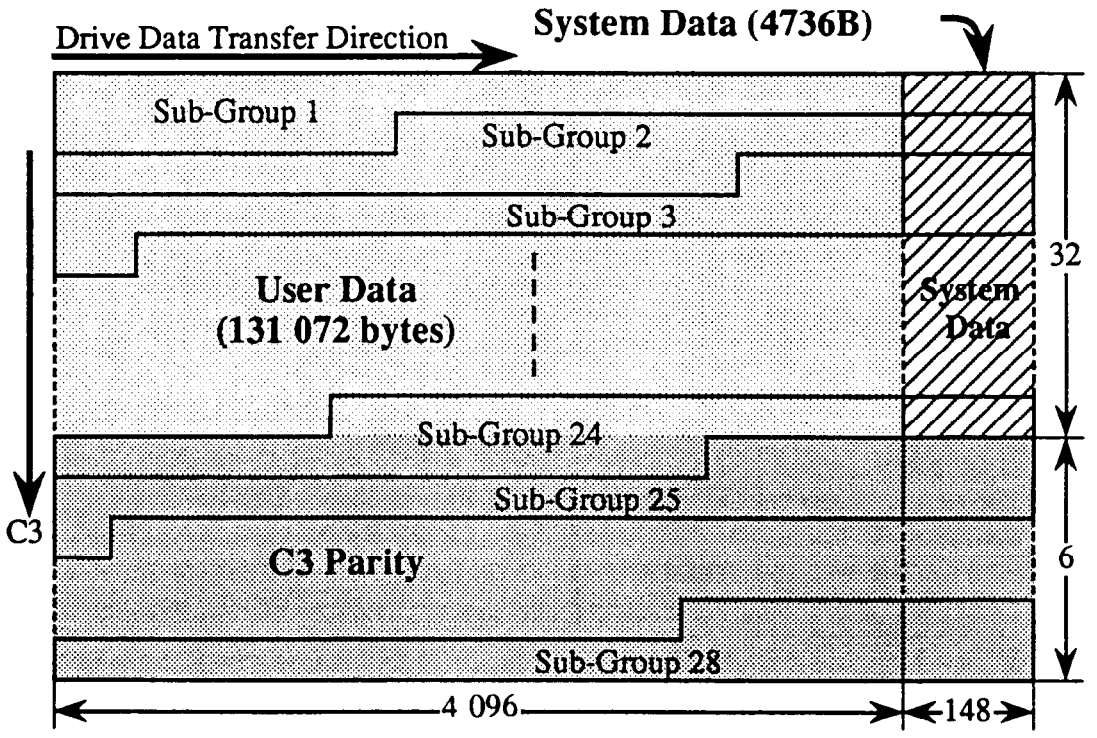

Figure 26 - Sub-group allocation Group Format 0

Copyright International Organization for Standardization
Provided by IHS under license with ISO
No reproduction or networking permitted without license from IHS
Not for Resale

9.2.2 Basic Groups for Group Format 1

Each Basic Group shall consist of user data and system data which are variable in length. The maximum size of the Basic Group is 238 596 bytes. User data and system data shall be mapped into a rectangular area which is 4 044 bytes wide and 59 bytes high. Each byte is allocated to a byte position (or offset address, see annex M) as follows.

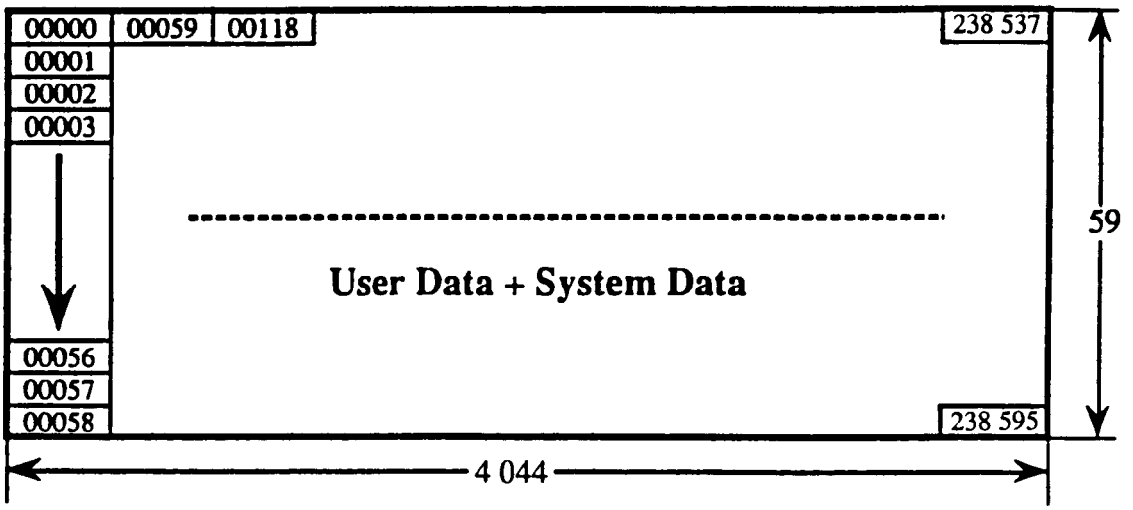

Figure 27 - Data allocation for Group Format 1

User data and system data of each Basic Group shall be further divided into Sub-groups of 5 760 bytes as follows.

- Sub-groups containing 5 760 bytes from the Basic Group,
- Sub-group containing 2 436 bytes from the Basic Group and 3 324 bytes of C3 parity generated by the tape system (see annex M),
- Sub-groups containing 5 760 bytes of C3 parity,
- Sub-group containing 5 376 bytes of C3 parity and 384 bytes set to all ZEROs.

Copyright International Organization for Standardization
Provided by IHS under license with ISO
No reproduction or networking permitted without license from IHS
Not for Resale

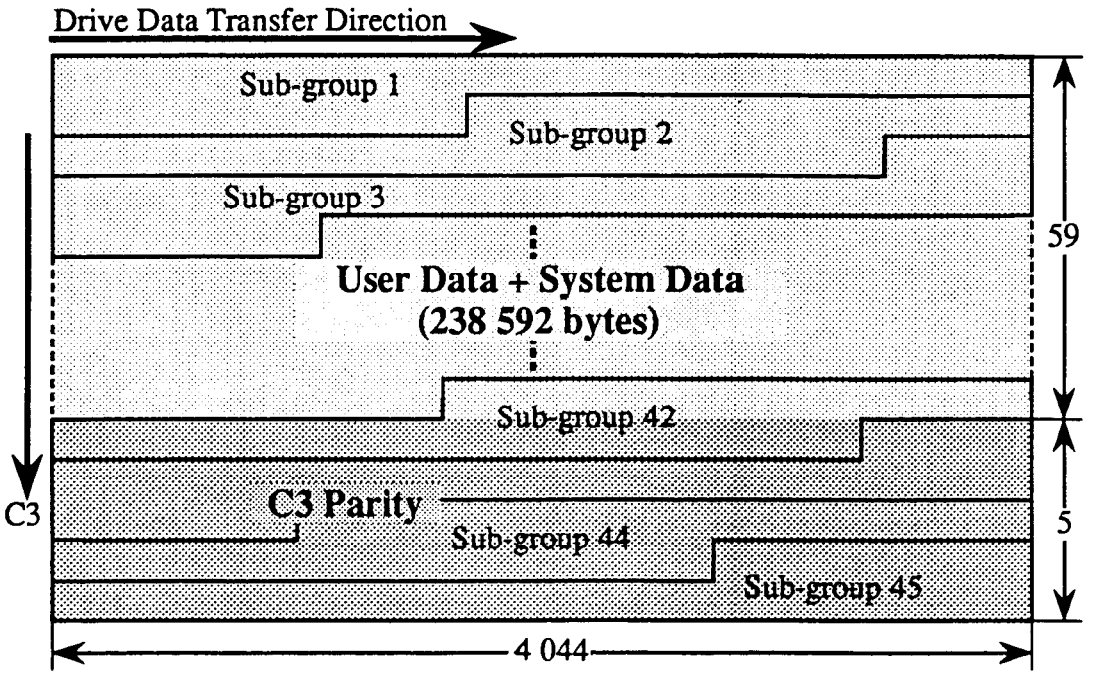

Figure 28 - Sub-group allocation for Group Format 1

9.3 Sub-groups

9.3.1 G1 Sub-group

When a Basic Group has been completed, it shall be split into G1 Sub-groups as identified above. Bytes are numbered from 0 to 5 759.

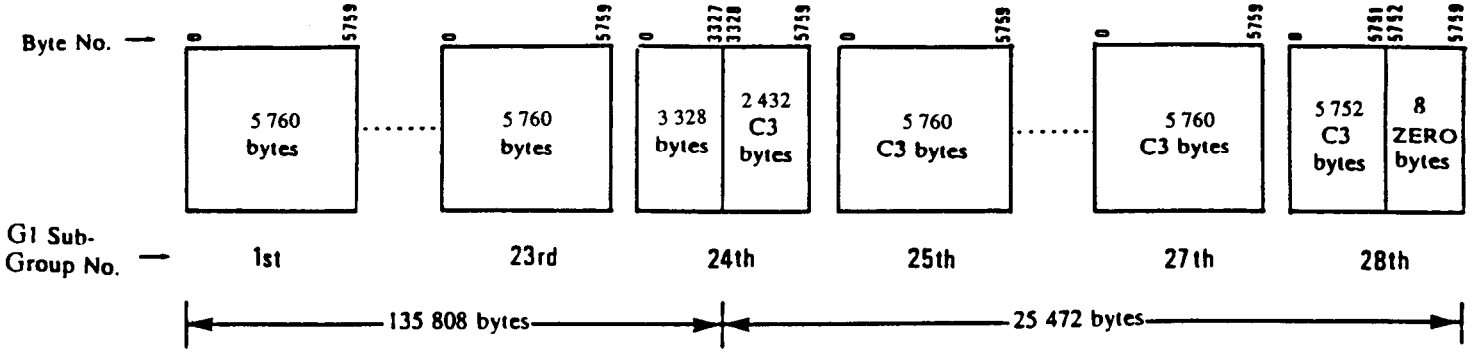

Figure 29 - G1 Sub-groups for Group Format 0

Copyright International Organization for Standardization
Provided by IHS under license with ISO
No reproduction or networking permitted without license from IHS
Not for Resale

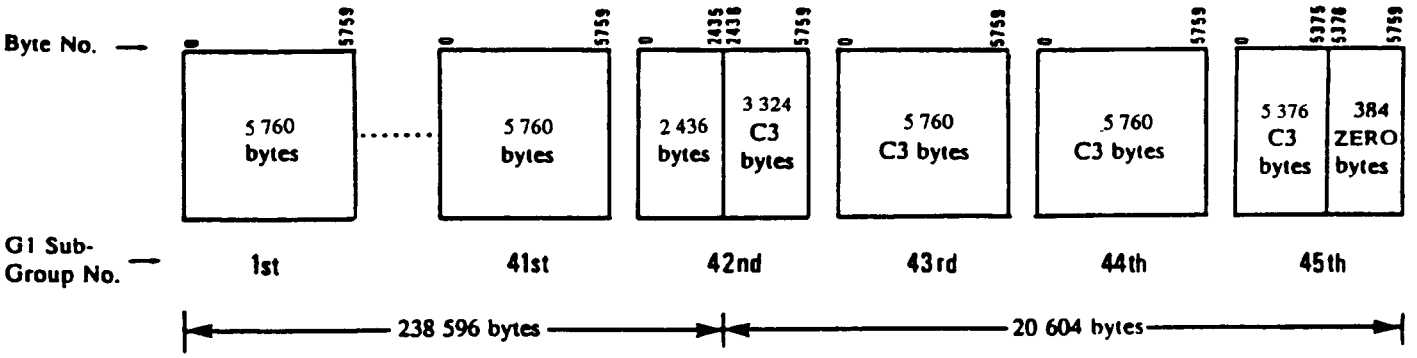

Figure 30 - G1 Sub-groups for Group Format 1

9.3.2 G2 Sub-group

This International Standard does not specify G2 Sub-groups.

9.3.3 G3 Sub-group

Each G1 Sub-group of 5 760 bytes shall be re-arranged into a G3 Sub-group of 5 828 bytes.

In a G3 Sub-group the bytes of the G1 Sub-group shall be ordered in rows of four bytes called a word. These words are numbered consecutively from 0 to 1 439. They are followed by 16 4-byte words numbered 1 440 to 1 455, all bytes of which are set to all ZEROs.

The bytes are further grouped in two-byte channels, called A and B. In each channel the bytes are allocated to a lower or an upper byte as follows:

Dk is allocated to the lower byte of channel A for $k = 0$ (mod 4)
Dk is allocated to the upper byte of channel A for $k = 1$ (mod 4)
Dk is allocated to the lower byte of channel B for $k = 2$ (mod 4)
Dk is allocated to the upper byte of channel B for $k = 3$ (mod 4)

Copyright International Organization for Standardization
Provided by IHS under license with ISO
No reproduction or networking permitted without license from IHS
Not for Resale

Channel name		A		B	
Byte name		upper	lower	upper	lower
Bit number		8 7 6 5 4 3 2 1	8 7 6 5 4 3 2 1	8 7 6 5 4 3 2 1	8 7 6 5 4 3 2 1
	0	D0	D1	D2	D3
	1	D4	D5	D6	D7
	2	D8	D9	D10	D11
	. . .	. . .	. . .	. . .	. . .
	1 438	D5748	D5749	D5750	D5751
	1 439	D5752	D5753	D5754	D5755
	1 440 . . . 1 455	All bytes set to all ZEROs			
Word number					

Figure 31 - G3 Sub-group

9.3.3.1 Byte identification

Each byte of a G3 Sub-group is now identified by

- its channel (A or B)
- its byte name (lower or upper)
- its word number (from 0 to 1 455)

Thus, the following notation is introduced.

A_{iL} indicates the byte identified by the lower byte of channel A in the i-th word.
A_{iu} indicates the byte identified by the upper byte of channel A in the i-th word.
B_{iL} indicates the byte identified by the lower byte of channel B in the i-th word.
B_{iu} indicates the byte identified by the upper byte of channel B in the i-th word.

9.3.4 G4 Sub-group

Each Sub-group G3 shall be transformed into a Sub-group G4 consisting of two twin arrays as follows.

A Sign, a Block Number and a Serial Number shall be allocated to each byte using the following formulae.

Copyright International Organization for Standardization
Provided by IHS under license with ISO
No reproduction or networking permitted without license from IHS
Not for Resale

Sign: $(-1)^{a+i}$

Block number: $i(\text{mod } 52) + 75(i(\text{mod } 2)) + \text{int}\,\frac{i}{832}$

Serial number: $2(u + \text{int}\,\frac{i}{52}) - \text{int}\,\frac{i}{52}(\text{mod}2) - 32\ \text{int}\,\frac{i}{832}$

where

int	= indicates the integer part of the quotient
i	= 0 to 1 455
a	= 0 for the A_{iu} and A_{il} bytes
a	= 1 for the B_{iu} and B_{il} bytes
u	= 0 for the A_{iu} and B_{iu} bytes
u	= 1 for the A_{iL} and B_{il} bytes

Processing a G3 Sub-group in this way yields twin arrays PLUS and MINUS in which each byte is identified by its Block Number (from 0 to 127) and its Serial Number (from 0 to 31).

Copyright International Organization for Standardization
Provided by IHS under license with ISO
No reproduction or networking permitted without license from IHS
Not for Resale

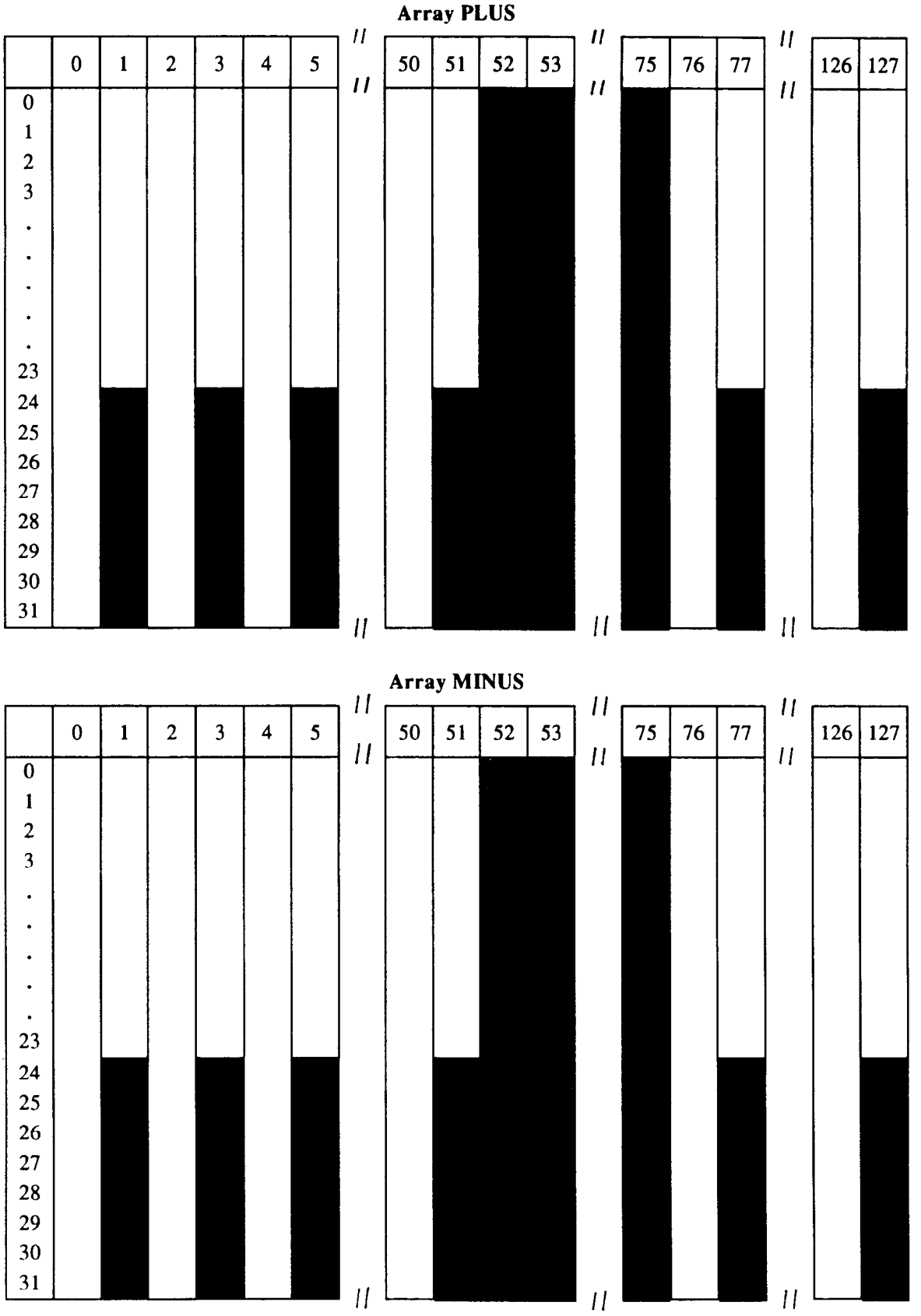

Figure 32 - Twin arrays of a G4 Sub-group before C1 and C2 computation

Copyright International Organization for Standardization
Provided by IHS under license with ISO
No reproduction or networking permitted without license from IHS
Not for Resale

Applying the above formulae to the bytes of a G3 Sub-group leaves a number of positions unoccupied in both arrays. These positions, shown shaded on figure 32, are

- Serial Numbers 24 to 31 in all odd numbered Blocks with Block Numbers 1 to 51 and 77 to 127;
- all Blocks with block Number from 52 to 75.

The bytes to be allocated to these positions shall be obtained by computing ECC bytes obtained from two error detection and correction codes C1 and C2 computed over the bytes already allocated into the two twin arrays.

The C2 bytes shall be computed for all Serial Numbers in each even-numbered Block with a Block Number from 52 to 74, and for Serial Numbers 0 to 23 in each odd-numbered Block with a Block Number from 53 to 75 from the bytes with the same Serial Number in all the other Blocks.

The C1 bytes shall then be computed for Serial Numbers 24 to 31 in all odd-numbered Blocks from all the bytes in the previous even-numbered Blocks and the bytes with a Serial Number from 0 to 23 in the odd-numbered Block. In Blocks with a Block Number from 53 to 75, these C1 bytes shall be computed from the C2 bytes previous computed.

These two computations yield the bytes for the byte positions indicated by the shaded portions of the two twin arrays of figure 32.

- C1 shall be a GF (2^8) Reed-Solomon Code (32, 28, 5)
- C2 shall be a GF (2^8) Reed-Solomon Code (32, 26, 7)

Calculation in a GF (2^8) is defined by

$$G(x) = x^8 + x^4 + x^3 + x^2 + 1$$

A primitive element α in GF (2^8) is defined as follows.

$$\alpha = \begin{matrix} (& 0 & 0 & 0 & 0 & 0 & 0 & 1 & 0 &) \\ & \alpha^7 & \alpha^6 & \alpha^5 & \alpha^4 & \alpha^3 & \alpha^2 & \alpha^1 & \alpha^0 & \end{matrix}$$

The interleave depth of C1 is two bytes, that of C2 is four blocks. The ECC bytes shall satisfy:

$$H_P \cdot V_P = 0$$

$$H_Q \cdot V_Q = 0$$

The generator polynomials shall be

$$G_P(x) = \prod_{i=0}^{i=3} (x - \alpha^i)$$

$$G_Q(x) = \prod_{i=0}^{i=5} (x - \alpha^i)$$

$$H_P = \begin{bmatrix} 1 & 1 & 1 & 1 & ..... & 1 & 1 & 1 \\ \alpha^{31} & \alpha^{30} & \alpha^{29} & \alpha^{28} & ..... & \alpha^2 & \alpha & 1 \\ \alpha^{62} & \alpha^{60} & \alpha^{58} & \alpha^{56} & ..... & \alpha^4 & \alpha^2 & 1 \\ \alpha^{93} & \alpha^{90} & \alpha^{87} & \alpha^{84} & ..... & \alpha^6 & \alpha^3 & 1 \end{bmatrix}$$

Copyright International Organization for Standardization
Provided by IHS under license with ISO
No reproduction or networking permitted without license from IHS
Not for Resale

$$H_Q = \begin{bmatrix} 1 & 1 & 1 & 1 & ..... & 1 & 1 & 1 \\ \alpha^{31} & \alpha^{30} & \alpha^{29} & \alpha^{28} & ..... & \alpha^{2} & \alpha & 1 \\ \alpha^{62} & \alpha^{60} & \alpha^{58} & \alpha^{56} & ..... & \alpha^{4} & \alpha^{2} & 1 \\ \alpha^{93} & \alpha^{90} & \alpha^{87} & \alpha^{84} & ..... & \alpha^{6} & \alpha^{3} & 1 \\ \alpha^{124} & \alpha^{120} & \alpha^{116} & \alpha^{112} & ..... & \alpha^{8} & \alpha^{4} & 1 \\ \alpha^{155} & \alpha^{150} & \alpha^{145} & \alpha^{140} & ..... & \alpha^{10} & \alpha^{5} & 1 \end{bmatrix}$$

where

$P_{i,j}$ = C1 bytes
$Q_{i,j}$ = C2 bytes
i = Block Number
j = Serial Number

$$V_P = \begin{bmatrix} D_{2k,l} \\ D_{2k,l+2} \\ D_{2k,l+4} \\ D_{2k,l+6} \\ D_{2k,l+8} \\ D_{2k,l+10} \\ D_{2k,l+12} \\ D_{2k,l+14} \\ D_{2k,l+16} \\ D_{2k,l+18} \\ D_{2k,l+20} \\ D_{2k,l+22} \\ D_{2k,l+24} \\ D_{2k,l+26} \\ D_{2k,l+28} \\ D_{2k,l+30} \\ D_{2k+1,l} \\ D_{2k+1,l+2} \\ D_{2k+1,l+4} \\ D_{2k+1,l+6} \\ D_{2k+1,l+8} \\ D_{2k+1,l+10} \\ D_{2k+1,l+12} \\ D_{2k+1,l+14} \\ D_{2k+1,l+16} \\ D_{2k+1,l+18} \\ D_{2k+1,l+20} \\ D_{2k+1,l+22} \\ P_{2k+1,l+24} \\ P_{2k+1,l+26} \\ P_{2k+1,l+28} \\ P_{2k+1,l+30} \end{bmatrix} \qquad V_Q = \begin{bmatrix} D_{m,n} \\ D_{m+4,n} \\ D_{m+8,n} \\ D_{m+12,n} \\ D_{m+16,n} \\ D_{m+20,n} \\ D_{m+24,n} \\ D_{m+28,n} \\ D_{m+32,n} \\ D_{m+36,n} \\ D_{m+40,n} \\ D_{m+44,n} \\ D_{m+48,n} \\ Q_{m+52,n} \\ Q_{m+56,n} \\ Q_{m+60,n} \\ Q_{m+64,n} \\ Q_{m+68,n} \\ Q_{m+72,n} \\ D_{m+76,n} \\ D_{m+80,n} \\ D_{m+84,n} \\ D_{m+88,n} \\ D_{m+92,n} \\ D_{m+96,n} \\ D_{m+100,n} \\ D_{m+104,n} \\ D_{m+108,n} \\ D_{m+112,n} \\ D_{m+116,n} \\ D_{m+120,n} \\ D_{m+124,n} \end{bmatrix}$$

--`,,```,,,,````-`-`,,`,,`,`,,`---
Copyright International Organization for Standardization
Provided by IHS under license with ISO
No reproduction or networking permitted without license from IHS
Not for Resale

For C1 : $k = 0, 1, ..., 63$
$L = 0,1$
if $k = 26, 27, ...$ to 37, then D_{ij} in V_P is read as Q_{ij}

For C2 : if $m = 0$ or 2, then $n = 0, 1, ..., 31$
if $m = 1$ or 3, then $n = 0, 1, ..., 23$

9.3.5 Main Data Block

Each 32-byte block of each array of a G4 Sub-group shall be transformed into a 35-byte Main Data Block by the addition of a header of three 8-bit bytes preceding the 32 bytes of the block.

- bytes : Main ID, W1 and W2
- byte : Main ID Parity

9.3.5.1 Main ID

The Main ID bytes W1 and W2 shall have the following contents.

9.3.5.1.1 W1 byte

	b8	b7	b6	b5	b4	b3	b2	b1
Block with even Block Numbers	Format ID		Track pitch		Frame Number			
Block with odd Block Numbers	0	0	0	0	0	0	0	0

Figure 33 - W1 byte

For all blocks of the G4 Sub-group with an odd Block Number the W1 byte shall be set to all ZEROs.

For all blocks of the G4 Sub-group with an even Block Number the W1 byte shall be set as follows:

Bits 8 and 7: if the Block Number (mod 8) equals 0 then these bits, called Format ID, shall be set to 01, otherwise they shall be set to 00

Bits 6 and 5: if the Block Number (mod 8) equals 4, then these bits, called ID4, which identify the Group Status, shall be set to:

0 0 Good Group or Amble Group or Header Group
0 1 Unused Spare Group
1 0 Used Spare Group or Continuation Spare Group
1 1 Defective Group or Defective Spare Group

Bits 4 to 1: Shall specify in binary notation a Frame Number. This is a running number which shall be incremented (mod 16) between consecutive frames. Repetitions and discontinuities are allowed at an append point, see 15.6.

9.3.5.1.2 W2 byte

b8	b7	b6	b5	b4	b3	b2	b1
0	Block Number of the Blocks of the G4 Sub-Group						

Figure 34 - W2- byte

Copyright International Organization for Standardization
Provided by IHS under license with ISO
No reproduction or networking permitted without license from IHS
Not for Resale

Bit 8: shall be set to ZERO to indicate that the block is a Main Data Block

Bits 7 to 1: shall specify in binary notation the Block Number from 0 to 127 within the G4 Sub-group and the Sign to which the Main Data Block belongs.

9.3.5.2 Main ID Parity

The Main ID Parity byte shall be set to (W1 ⊕ W2), where ⊕ is the Exclusive OR operator.

9.3.5.3 Summary of the structure of a Main Data Block

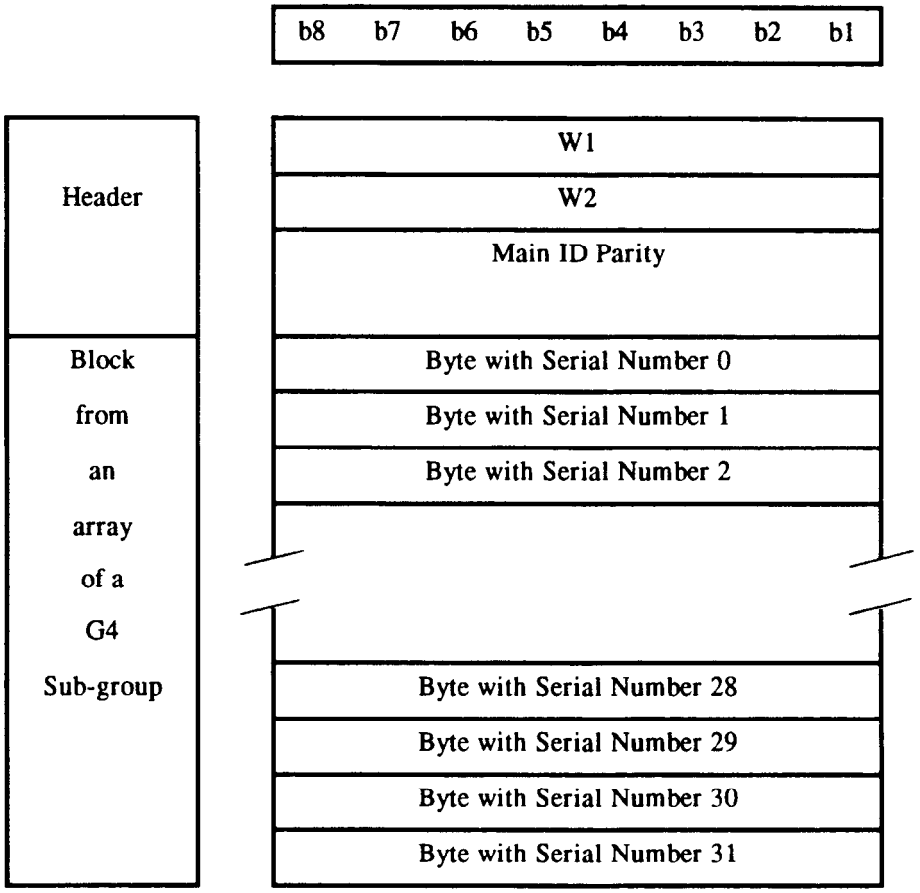

Figure 35 - Main data block

9.4 Sub-Data area

The Sub-Data area shall contain information arranged in units called Pack Items.

- Pack Items No. 1 and No. 2 contain information about the group, viz
  - . Group Number, Frame Number, Absolute Frame Number,
  - . Not Normal Group Flag, Area Code, Second Group Number and Initialization Count,
- Pack Item No. 3 contains information about the current partition,
- Pack Item No. 4 contains information about Records within the current partition,
- Pack Items No. 5 to No. 7 contain information about the three Separators, viz.
- Start Separator Number for the current Basic Group,
- Number of Separators in the current Basic Group.

Copyright International Organization for Standardization
Provided by IHS under license with ISO
No reproduction or networking permitted without license from IHS
Not for Resale

Each Pack Item consists of eight 8-bit bytes numbered from 1 to 8, b8 being the most significant bit. In all Pack Items

- Bits 8 to 5 of byte No. 1 shall specify in binary notation the Pack Item Number, and bits 4 to 1 shall be set to ZERO,
- for all multiple-byte fields, the lowest numbered byte shall be the most significant and the highest numbered byte shall be the least significant.
- Byte No. 8 is called parity. For each bit position the content shall be the sum (mod 2) of the corresponding bits of the other seven bytes.

9.4.1 Pack Item No. 1

Table 1 - Pack Item No. 1

	b8	b7	b6	b5	b4	b3	b2	b1
1	0	0	0	1	0	0	0	0
2	Group Number							
3	Group Number							
4	Frame Number							
5	Absolute Frame Number							
6	Absolute Frame Number							
7	Absolute Frame Number							
8	Parity							

9.4.1.1 Bytes No. 2 and No. 3

Bytes No. 2 and No. 3 shall specify the running Group Number of the group expressed in binary notation as 2's complement.

The first group of the Master Reference and of the Partition Reference shall have the Group Number 0.

Groups before the Master Reference shall have a negative Group Number. Groups before the Partition Reference in the same partition shall also have a negative Group Number.

9.4.1.2 Byte No. 4

Byte No. 4 shall specify the Frame Number of the frame in which this Pack Item is recorded.

This Frame Number is relative to the first Data Frame of the group, which has the Frame Number 0, and increases by 1 up to the last frame of the group or to the last frame associated with the group, if present.

Frames of the group or associated with the group, if present, preceding the first data frame of the group shall have negative Frame Numbers.

This Frame Number is expressed in binary notation in 2's complement.

9.4.1.3 Bytes No. 5 to No. 7

Bytes No. 5 to No. 7 shall specify the Absolute Frame Number relative to the first frame of a tape, which has the Absolute Frame Number of zero.

Copyright International Organization for Standardization
Provided by IHS under license with ISO
No reproduction or networking permitted without license from IHS
Not for Resale

Absolute Frame Numbers shall increase continuously in ascending order. They may become discontinuous when a frame or partition is overwritten.

9.4.2 Pack Item No. 2

Table 2 - Pack Item No. 2

	b8	b7	b6	b5	b4	b3	b2	b1
1	0	0	1	0	0	0	0	0
2	Not Normal Group Flag							
3	Second Group Number							
4	Second Group Number							
5	Area Code							
6	Initialization Count							
7	0	0	0	0	0	0	0	0
8	Parity							

9.4.2.1 Byte No. 2

Byte No. 2 shall be the Not Normal Group Flag.

- bits b8 to b2 shall be set to ZERO
- bit b1 shall be set to ZERO if the group is a Normal Group
- bit b1 shall be set to ONE if the group is not a Normal Group (e.g. Spare Group, Amble Group, etc.)

9.4.2.2 Bytes No. 3 and No. 4

Bytes No. 3 and No. 4 shall specify a Second Group Number, which is the number of Normal Groups from the beginning of a partition.

The first Normal Group in a partition shall have the Second Group Number 0.

In the Load/Unload Area, Lead-in Area Preamble and Header, these bytes shall be set to all ZEROs.

9.4.2.3 Byte No. 5

Byte No. 5 shall specify the Area Code, which identifies the current area of the tape. Area codes shall be as shown in the following figure.

Copyright International Organization for Standardization
Provided by IHS under license with ISO
No reproduction or networking permitted without license from IHS
Not for Resale

Tape Areas		Group Type	Area Code
Load/Unload Area			00 000 000
Lead-in Area		Preamble Group	01 000 000
		Header	01 000 001
		Master Reference	01 000 010
		Postamble Group	01 000 100
Partition	Partition Lead-in Area	Preamble Group	10 001 000
		Reference	10 001 010
		Postamble Group	10 001 100
	Partition Data Area	Data Group or Spare Groups	10 010 010
		Partition Amble Group	10 010 100
	EOP		10 100 000
	Unused Area		10 100 000
EOI			11 000 000

Figure 36 - Area Codes

9.4.2.4 Byte No. 6

Byte No. 6 shall specify the number of times the tape has been initialized.

A tape is initialized when a new Load/Unload Area, Lead-in Area, Partition Area (usually a single empty partition), and an EOI have been written.

The initialization Count shall be set to 1 when the tape is first initialized and shall increased by 1 each time the tape is re-initialized. This byte is used to distinguish current data from previous data which may occur after EOI.

All groups and frames before EOI shall have the same Initialization Count. The Initialization Count of EOI shall be set to "i-1", where "i" is the Initialization Count of groups before EOI. The Initialization Count of groups after EOI shall be different from that of groups before EOI.

9.4.2.5 Byte No. 7

Byte No. 7 shall be set to all ZEROs.

Copyright International Organization for Standardization
Provided by IHS under license with ISO
No reproduction or networking permitted without license from IHS
Not for Resale

9.4.3 Pack Item No. 3

Table 3 - Pack Item No. 3

	b8	b7	b6	b5	b4	b3	b2	b1
1	0	0	1	1	0	0	0	0
2	Partition Number							
3	Partition Initialization Count							
4	Partition Initialization Count							
5	Group Format ID							
6	0	0	0	0	0	0	0	0
7	0	0	0	0	0	0	0	0
8	Parity							

9.4.3.1 Byte No. 2

Byte No. 2 shall specify a Partition Number from 0 to 255.

Partition Number 0 shall be recorded in the Load/Unload Area and in the Lead-in Area.

Partition Numbers 1 to 254 shall be recorded for the subsequent partitions.

Partition Number 255 shall be recorded for the EOI area.

9.4.3.2 Bytes No. 3 and No. 4

Bytes No. 3 and No. 4 shall specify the number of times the partition has been initialized. Initializing a partition means to write a new Partition Lead-in, a Partition Data, if present, or an EOP.

The value shall be set to 1 the first time the partition is initialized. This value shall increase by 1 for each further initialization.

All groups in a partition before EOP shall have the same Partition Initialization Count. The Partition Initialization Count of EOP shall be set to "*i*-1", where "*i*" is the Partition Initialization Count of groups before EOP. The Partition Initialization Count of groups after EOP shall be different from that of groups before EOP.

9.4.3.3 Byte No. 5

Byte No. 5 shall specify the group format of the current Basic Group. This value shall be either 0 for Group Format 0 or 1 for Group Format 1, respectively.

9.4.3.4 Bytes No. 6 and No. 7

Bytes No. 6 and No. 7 shall be set to all ZEROs.

Copyright International Organization for Standardization
Provided by IHS under license with ISO
No reproduction or networking permitted without license from IHS
Not for Resale

9.4.4 Pack Item No. 4

Table 4 - Pack Item No. 4

	b8	b7	b6	b5	b4	b3	b2	b1
1	0	1	0	0	0	0	0	0
2	Start Record Number							
3	Start Record Number							
4	Start Record Number							
5	Start Record Number							
6	Number of Records in a Group							
7	Number of Records in a Group							
8	Parity							

9.4.4.1 Bytes No. 2 to No. 5

Bytes No. 2 to No. 5 shall specify the Record Number of the first record that starts in the current Basic Group.

Record Numbers start with 0, thus the Record Number specified by bytes No. 2 to No. 5 is equal to the number of records written from the beginning of the partition.

9.4.4.2 Bytes No. 6 and No. 7

Bytes No. 6 and No. 7 specify the number of user data records started in the current Basic Group.

9.4.5 Pack Item No. 5

Table 5 - Pack Item No. 5

	b8	b7	b6	b5	b4	b3	b2	b1
1	0	1	0	0	0	0	0	0
2	Start Record Number							
3	Start Record Number							
4	Start Record Number							
5	Start Record Number							
6	Number of Records in a Group							
7	Number of Records in a Group							
8	Parity							

9.4.5.1 Bytes No. 2 to No. 5

Bytes No. 2 to No. 5 shall specify the Separator 1 Number of the first Separator 1's in the current Basic Group.

The Separator 1 Numbers start with 0, thus the Start Separator 1 Number specified by bytes No. 2 to No. 5 is equal to the number of Separator 1's written from the beginning of the partition.

Copyright International Organization for Standardization
Provided by IHS under license with ISO
No reproduction or networking permitted without license from IHS
Not for Resale

9.4.5.2 Bytes No. 6 and No. 7

Bytes No. 6 and No. 7 shall specify the number of Separator 1's written in the current Basic Group.

9.4.6 Pack Item No. 6

Table 6 - Pack Item No. 6

	b8	b7	b6	b5	b4	b3	b2	b1
1	0	1	1	0	0	0	0	0
2	Start Separator 2 Number							
3	Start Separator 2 Number							
4	Start Separator 2 Number							
5	Start Separator 2 Number							
6	Number of Separator 2's in a Group							
7	Number of Separator 2's in a Group							
8	Parity							

9.4.6.1 Bytes No. 2 to No. 5

Bytes No. 2 to No. 5 shall specify the Separator 2 Number of the first Separator 2 in the Current Basic Group.

The Separator 2 Numbers start with 0, thus the Start Separator 2 Number specified by bytes No. 2 to No. 5 is equal to the number of Separator 2's written from the beginning of the partition.

9.4.6.2 Bytes No. 6 and No. 7

Bytes No. 6 and No. 7 shall specify the number of Separator 2's written in the current Basic Group.

Copyright International Organization for Standardization
Provided by IHS under license with ISO
No reproduction or networking permitted without license from IHS
Not for Resale

9.4.7 Pack Item No. 7

Table 7 - Pack Item No. 7

	b8	b7	b6	b5	b4	b3	b2	b1
1	0	1	1	0	0	0	0	0
2	Start Separator 3 Number							
3	Start Separator 3 Number							
4	Start Separator 3 Number							
5	Start Separator 3 Number							
6	Number of Separator 3's in a Group							
7	Number of Separator 3's in a Group							
8	Parity							

9.4.7.1 Bytes No. 2 to No. 5

Bytes No. 2 to No. 5 shall specify the Separator 3 Number of the first Separator 3 in the Current Basic Group.

The Separator 3 Numbers start with 0, thus the Start Separator 3 Number specified by bytes No. 2 to No. 5 is equal to the number of Separator 2's written from the beginning of the partition.

9.4.7.2 Bytes No. 6 and No. 7

Bytes No. 6 and No. 7 shall specify the number of Separator 3's written in the current Basic Group.

9.4.8 Sub Data Block

A Sub-Data Block shall consist of thirty five 8-bit bytes:

- a 3-byte Header
- three Pack Items
- bytes which are either Pack Item No. 7 or Parity.

There shall be 16 such Sub Data Blocks per track numbered sequentially. The Block Number is a running number allocated to each Sub Data Block within one track. In the Sub Zone 1 of a track these numbers run from 0 to 7, in the Sub Zone 2 they run from 8 to 15.

9.4.8.1 Header

The header shall consist of

- bytes: Sub ID SW1 and SW2
- byte: Sub ID Parity.

9.4.8.1.1 SW1 Byte

	b8	b7	b6	b5	b4	b3	b2	b1
Even Block Number	0	0	0	0	1	0	0	0
Odd Block Number	0	0	0		1	0	0	0

Figure 37 - SW1 Byte

Copyright International Organization for Standardization
Provided by IHS under license with ISO
No reproduction or networking permitted without license from IHS
Not for Resale

- bits b8 to b5 and b3 to b1 shall be set to ZERO
- bit b4 shall be set to ONE.

9.4.8.1.2 SW2 Byte

	b8	b7	b6	b5	b4	b3	b2	b1
Even Block Number	1	1	1	1	Block Number			
Odd Block Number	1	0	0	0	Block Number			

Figure 38 - SW2 Byte

- bit b8 shall be set to ONE to indicate that the block is a Sub Data Block
- bits b7 to b5 shall be set to ONE for blocks with an even Block Number and to ZERO for blocks with an odd Block Number
- bits b4 to b1 shall specify the Block Number of the current block. Sub Zone 1 shall contain the blocks with Block Numbers 1 to 7 and Sub Zone 2 shall contain the blocks with Block Numbers 8 to 15.

9.4.8.1.3 Sub ID Parity byte

The Sub ID Parity byte shall be set to (SW1 ⊕ SW2), where ⊕ is the Exclusive OR operator.

9.4.8.2 Data Part of a Sub Data Block

The bytes following the header shall be as follows:

- the first 24 bytes shall be three 8-byte Pack Items,
- the last 8 bytes shall be either Pack Item No. 7 or Parity.

9.4.8.3 Summary of the structure of a Sub Data Block

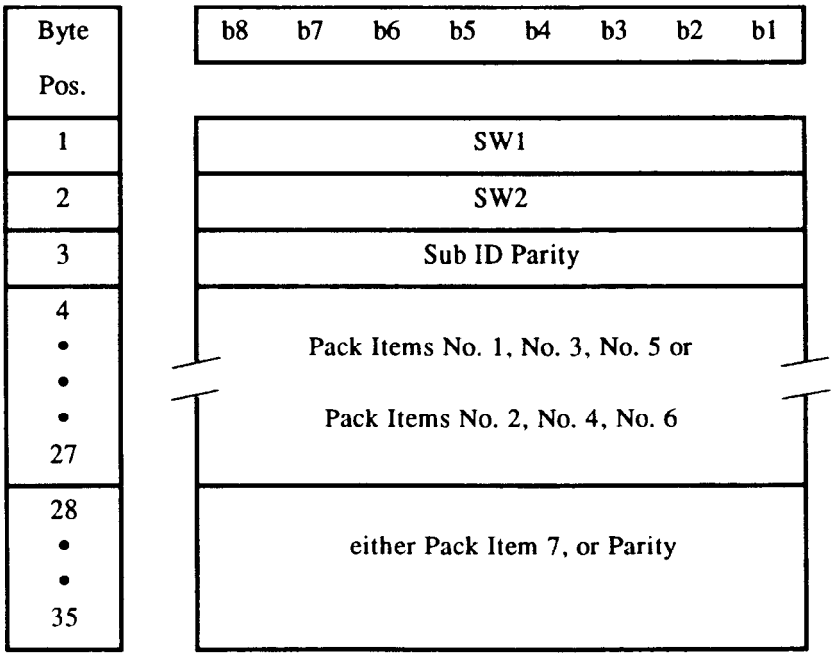

Figure 39 - Sub Data Block

Copyright International Organization for Standardization
Provided by IHS under license with ISO
No reproduction or networking permitted without license from IHS
Not for Resale

9.4.8.4 Pack Item location

The Pack Items shall be allocated group-wise to two areas of a track called Sub Zone 1 and Sub Zone 2 (see table 12).

Block Number	Parity Item Number			
Even	1	3	5	7
Odd	2	4	6	C1 Parity

Figure 40 - Pack Item location

For blocks with Block Numbers 0 to 7, the location is in Sub Zone 1.

For blocks with Block Numbers 8 to 15, the location is in Sub Zone 2.

9.5 Basic Group structure

The Basic Group consists of the following:

- User Data
- System Data

The structure of a Basic Group shall be as shown in figure 41.

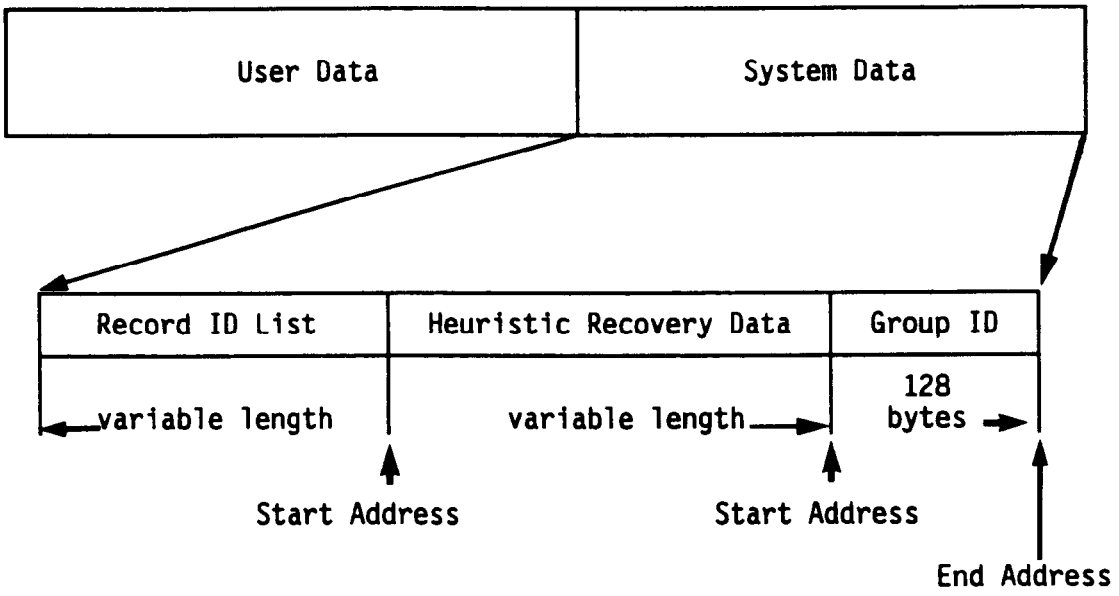

Figure 41 - Basic Group Layout

9.5.1 User Data

The User Data is subdivided into records, which are the basic units for transmitting data to, and receiving data from the host system and can have a variable or a fixed length (see 9.5.3.1). This subdividing information shall be recorded as System Data. The record layout shall be as shown in figure 42.

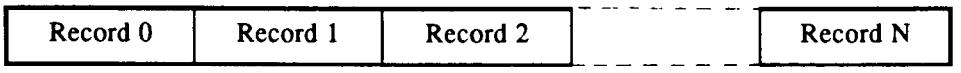

Figure 42 - Record layout in User Data

Copyright International Organization for Standardization
Provided by IHS under license with ISO
No reproduction or networking permitted without license from IHS
Not for Resale

The User Data shall start at byte No. 0 in the Basic Group. Records are placed continuously with the first byte of the next record following immediately the last byte of the previous record. If a record does not end within the current group, it shall continue in the next group.

The length and status of records are specified in the Record ID List (see 9.5.3) in the System Data. Any byte in the User Data not specified in the Record ID List is unused.

Records may be collected into an entity. Entities may start and end in the same Basic Group. Entities may also be continued from one Basic Group to another Basic Group. All records between the start of an entity and the end of an entity are considered to be a part of that entity.

9.5.2 System Data

The structure of System Data in the Basic Groups shall be as shown in figure 41. The System Data consists of, a Record ID List, Heuristic Recovery Data and a Group ID.

9.5.2.1 Group ID

The Group ID field shall be recorded in the last 128 bytes of System Data of the Basic Group. See table 8.

The first byte of the Group ID List is recorded in byte position 135 679 of the Basic Group for Group Format 0, and in byte position 238 467 of the Basic Group for Group Format 1.

Copyright International Organization for Standardization
Provided by IHS under license with ISO
No reproduction or networking permitted without license from IHS
Not for Resale

Table 8 - Group ID

Byte Offset	size (byte)	Description
0	1	Set to all ZEROs
1	3	Pointer to Record IS List
4	1	Set to all ZEROs
5	3	Pointer to Heuristic Recovery Data Area
8	1	Set to all ZEROs
9	3	Length of User Data (in bytes)
12	1	Record Length Code
13	1	Basic Group Status Byte
14	2	New Group Number
16	2	Set to all ZEROs
18	2	Last Continuation Mark
20	4	Set to all ZEROs
24	8	Set to all ZEROs
32	2	Group Number
34	6	Set to all ZEROs
40	1	Not Normal Group Flag
41	2	Second Group Number
43	1	Area Code
44	1	Initialization Count
45	3	Set to all ZEROs
48	1	Partition Number
49	2	Partition Initialization Count
51	1	Group Format ID
52	4	Set to all ZEROs
56	4	Start Record Number
60	2	Number of Records
62	2	Set to all ZEROs
64	4	Start Separator 1 Number
68	2	Number of Separator 1
70	2	Set to all ZEROs
72	4	Start Separator 2 Number
76	2	Number of Separator 2
78	2	Set to all ZEROs
80	4	Start Separator 3 Number
84	2	Number of Separator 3
86	42	Set to all ZEROs

Copyright International Organization for Standardization
Provided by IHS under license with ISO
No reproduction or networking permitted without license from IHS
Not for Resale

9.5.2.1.1 Pointer to Record ID List

This pointer shall specify the relative displacement from the lowest byte position of the Group ID to the highest byte position of the Record ID List which is defined as below.

Pointer to Record ID List = ADR - ADG

where

ADR : Byte position of the first byte of the Record ID List
ADG : Byte position of the first byte of the Group ID

This value is always negative (2's complement binary number), because the Record ID List is positioned before the Group ID.

9.5.2.1.2 Pointer to Heuristic Recovery Data Area

This pointer shall specify the relative displacement from the lowest byte position of the Group ID to the lowest byte position of the Heuristic Recovery Data Area which is defined as below.

Pointer to Heuristic Recovery Data Area = ADH - ADG

where

ADH : Byte position of the first byte of the Heuristic Recovery Data Area
ADG : Byte position of the first byte of the Group ID

This value is always negative (2's complement binary number), because the Heuristic Recovery Data Area is positioned before the Group ID.

9.5.2.1.3 Length of User Data

This field shall specify the total length in bytes of all records in the Basic Group.

9.5.2.1.4 Record Length Code

This field shall specify the default record length for fixed-length records. If no default record length is defined, this field is set to 255. In this case, all records used in this group must be recorded as variable-length records in the Record ID List (see table 9).

Table 9 - Record length code

Code	Record length	Code	Record length	Code	Record length
0	256 bytes	5	8 192 bytes	10	These
1	512 bytes	6	16 384 bytes	to	code values
2	1 024 bytes	7	32 768 bytes		shall not
3	2 048 bytes	8	65 536 bytes	254	be used
4	4 096 bytes	9	131 072 bytes	255	Not specified

9.5.2.1.5 Basic Group Status Byte

Figure 43 specifies the Group Status Bytes. Other bit combinations are prohibited by this International Standard.

Copyright International Organization for Standardization
Provided by IHS under license with ISO
No reproduction or networking permitted without license from IHS
Not for Resale

b8	b7	b6	b5	b4	b3	b2	b1
0	0	0	0	0	GS		

0	0	0	— Good Group
0	1	0	— Unused Spare Group
1	0	0	— Continuation Spare Group
1	0	1	— Used Spare Group
1	1	1	— Defective Group
1	1	1	— Defective Spare Group

Figure 43 - Group Status Byte

9.5.2.1.6 New Group Number

The content of the New Group Number field depends on the Group Status. It shall be as shown in table 10.

Table 10 - New Group Number

Group Status	GS setting	New Group Number
Good Group	000	Set to all ONEs
Unused Spare Group	010	Set to all ONEs
Continuation Spare Group	100	Contains an approximation of the number of free bytes within the group in units of 1 024 bytes.
Used Spare Group	101	Contains the Second Group Number of the original group which is being replaced.
Defective Group	110	Contains the Group Number of the Used Spare Group in which the content of this group is written.
Defective Spare Group	111	Contains the Group Number of the Used Spare Group in which the content of the original Defective Group is written.

9.5.2.1.7 Last Continuation Mark

When a set of records is updated, the user data may exceed the original space. In this case the residual user data shall be written in a record or a set of records in a Continuation Spare Group. The start of this residual user data shall be identified by a Continuation Mark. In each Continuation Spare Group a Continuation Mark Number shall be allocated to each Continuation Mark as it is written in the group. This number starts with 1 and is increased by 1 for each subsequent Continuation Mark.

The field Last Continuation Mark of the Group ID List of a Continuation Spare Group shall specify the Continuation Mark Number of the last Continuation Mark written in this group.

For all groups other than Continuation Spare Groups, this field shall be set to all ZEROs.

9.5.2.1.8 Group number

This number shall be that specified by bytes No. 2 and No. 3 of Pack Item No. 1 (see 9.4.1.1).

9.5.2.1.9 Not Normal Group Flag

This field shall be set as byte No. 2 of Pack Item No. 2 (see 9.4.2.1).

Copyright International Organization for Standardization
Provided by IHS under license with ISO
No reproduction or networking permitted without license from IHS
Not for Resale

9.5.2.1.10 Second Group number

This number shall be that specified by bytes No. 2 and No. 3 of Pack Item No. 2 (see 9.4.2.2).

9.5.2.1.11 Area code

This code shall be that specified by byte No. 5 of Pack Item No. 2 (see 9.4.2.3).

9.5.2.1.12 Initialization count

This number shall be that specified by byte No. 6 of pack Item No. 2 (see 9.4.2.4).

9.5.2.1.13 Partition number

This number shall be that specified by byte No. 2 of Pack Item No. 3 (see 9.4.3.1).

9.5.2.1.14 Partition initialization count

This number shall be that specified by bytes No. 3 and No. 4 of Pack Item No. 3 (see 9.4.3.2).

9.5.2.1.15 Group Format ID

This field shall be set as byte No. 5 of Pack Item No. 3 (see 9.4.3.3).

9.5.2.1.16 Start Record number

This number shall be that specified by bytes No. 2 to No. 5 of Pack Item No. 4 (see 9.4.4.1).

9.5.2.1.17 Number of Records

This number shall be that specified by bytes No. 6 and No. 7 of Pack Item No. 4 (see 9.4.4.2).

9.5.2.1.18 Start Separator 1 Number

This number shall be that specified by bytes No. 2 to No. 5 of Pack Item No. 5 (see 9.4.5.1).

9.5.2.1.19 Separator 1 Count

This number shall be that specified by bytes No. 6 and No. 7 of Pack Item No. 5 (see 9.4.5.2).

9.5.2.1.20 Start Separator 2 number

This number shall be that specified by bytes No. 2 to No. 5 of Pack Item No. 6 (see 9.4.6.1).

9.5.2.1.21 Separator 2 count

This number shall be that specified by bytes No. 6 and No. 7 of Pack Item No. 6 (see 9.4.6.2).

9.5.2.1.22 Start Separator 3 Number

This number shall be that specified by bytes No. 2 to No. 5 of Pack Item No. 7 (see 9.4.7.1).

9.5.2.1.23 Separator 3 count

This number shall be that specified by bytes No. 6 and No. 7 of Pack Item No. 7 (see 9.4.7.2).

9.5.3 Record ID list

This list shall indicate the type of the corresponding records in the Basic Group and shall be recorded as shown in table 11. The Record ID List is a table of at least 1 byte in length. One table entry is allocated to each record. Therefore, the Record ID List is also of variable length. The Record ID for the first record of the Basic Group shall

Copyright International Organization for Standardization
Provided by IHS under license with ISO
No reproduction or networking permitted without license from IHS
Not for Resale

have the highest byte position, and the record ID for the last record of the Basic Group shall have the lowest byte position.

Table 11 - Record ID list

Terminator
Record IS No. n
:
Record IS No. 3
Record IS No. 2
Record ID No. 1
Record ID No. 0

9.5.3.1 Record ID

The Record ID shall specify the record type. If the record is a fixed-length record, the Record ID shall consist of 1 byte (without Data Count field). If the record is a variable-length record, the Record ID shall consist of 2 to 5 bytes. Record IDs for Separator 1, Separator 2 and Separator 3 shall consist of 1 byte (no Data Count Field). Record IDs for Continuation Marks and Continuation Mark Pointers shall consist of 2 to 5 bytes. Figure 44 shows the format of the Record ID.

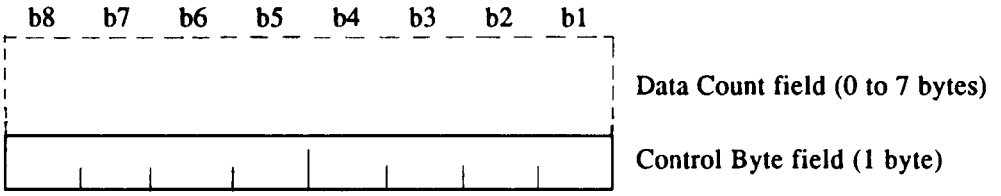

Figure 44 - Record ID Format

9.5.3.2 Record ID for Data Records

9.5.3.2.1 Control Byte for Data Records

The contents of a Control Byte for data records shall be as shown in figure 45.

Copyright International Organization for Standardization
Provided by IHS under license with ISO
No reproduction or networking permitted without license from IHS
Not for Resale

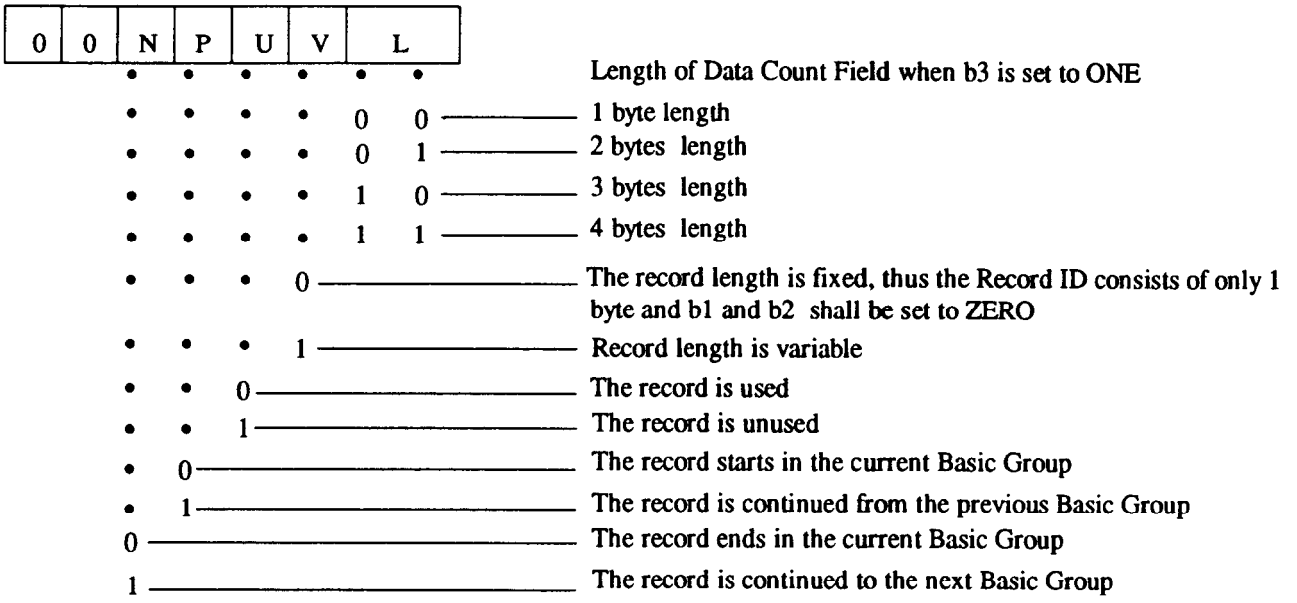

Figure 45 - Control Byte for Data Records

9.5.3.2.2 Data Count Field for Data Records

The Data Count Field shall indicate the length in bytes of the portion of the corresponding variable-length record that is contained in this Basic Group and is referred to by this Record ID. If the record referred to starts and ends in the current Basic Group, the Data Count Field will contain the length of the full record.

If b3 is set to ZERO, this indicates that the length of the Data Count Field is 0 and that the length of this record is equal to the record length defined by Record Length Code in the Group ID. In this case, b2 and b1 shall be set to ZERO.

If b3 is set to ONE, this indicates that the length of the Data Count Field is that specified by the setting of b2 and b1 of the Control Byte.

If this Record ID is between the start of an entity and the end of an entity, this size is the unprocessed size of the record.

9.5.3.3 Record ID for Continuation Marks

Continuation Marks are normally generated and used by the tape system

- to point to the record within a Continuation Spare Group from the current Basic Group which contains the residual user data as a result of an Update-in-Place operation when that operation results in more data than written in the Data Group of the current Basic Group before this operation, and
- to identify the end of the residual user data within the Continuation Spare Group for the current operation.

9.5.3.3.1 Control Byte for Continuation Marks

The contents of a Control Byte for Continuation Marks shall be as shown in figure 46.

Copyright International Organization for Standardization
Provided by IHS under license with ISO
No reproduction or networking permitted without license from IHS
Not for Resale

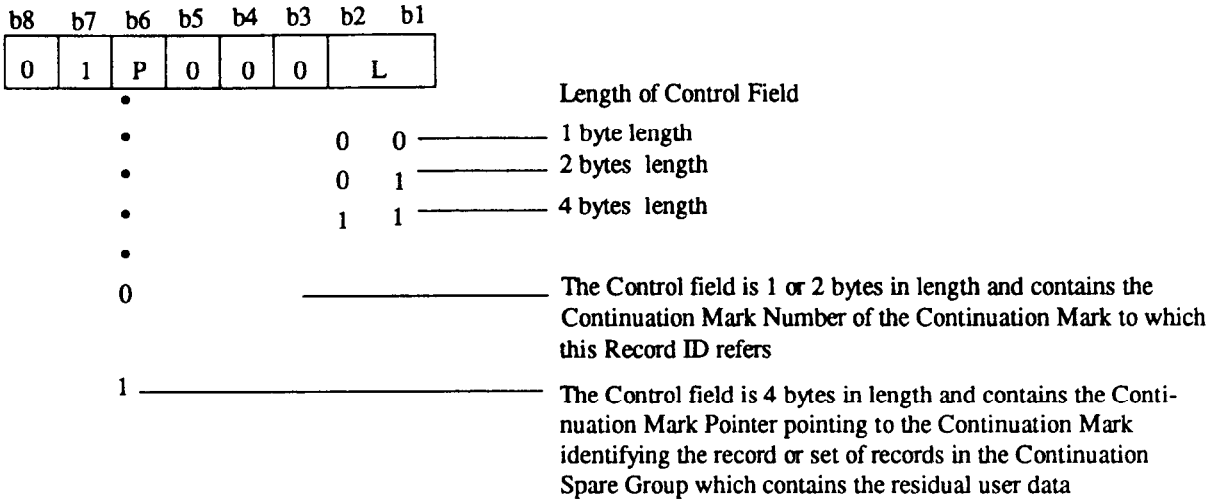

Figure 46 - Control Byte for Continuation Marks

9.5.3.3.2 Data Count Field for Continuation Marks

When b6 is set to ONE, the first 2 bytes of the Control field Group contain the Group Number of the Continuation Spare Group which contains the record into which the residual user data from an Update-in-Place operation was written. The last 2 bytes contain the Continuation Mark Number of the Continuation Mark within the Continuation Spare Group which contains the residual user data.

When b6 is set to ZERO, the Control field is 1 or 2 bytes in length and contains the Continuation Mark Number of the Continuation Mark to which this Record ID refers.

9.5.3.4 Record ID for Separator 1, 2, and 3

9.5.3.4.1 Control Byte for Separator 1, 2, and 3

The contents of a Control Byte for Separator 1, 2, and 3 shall be as shown in figure 47.

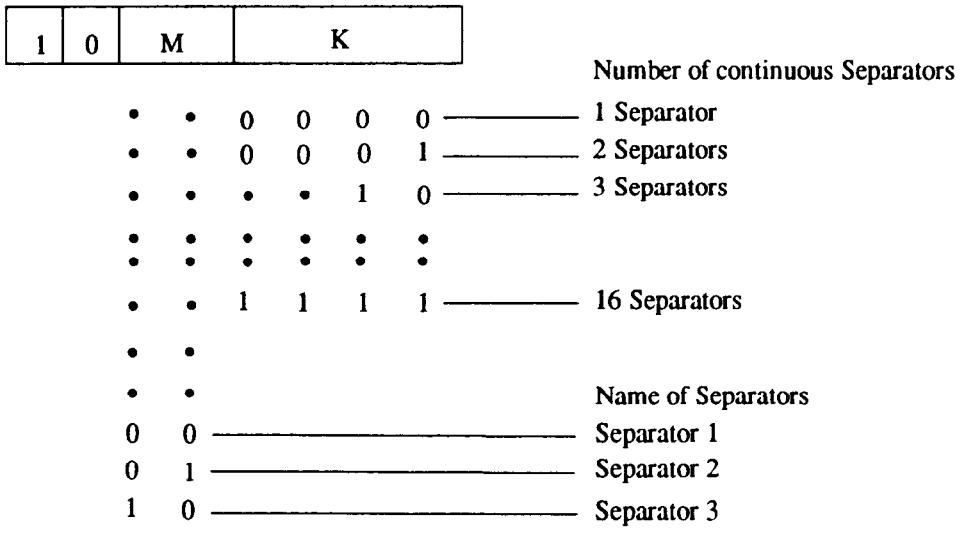

Figure 47 - Control Byte for Separators 1, 2 and 3

Copyright International Organization for Standardization
Provided by IHS under license with ISO
No reproduction or networking permitted without license from IHS
Not for Resale

9.5.3.5 Record ID for entities

9.5.3.5.1 Control Byte for entities

The contents of a Control Byte for entities are shown in figure 48.

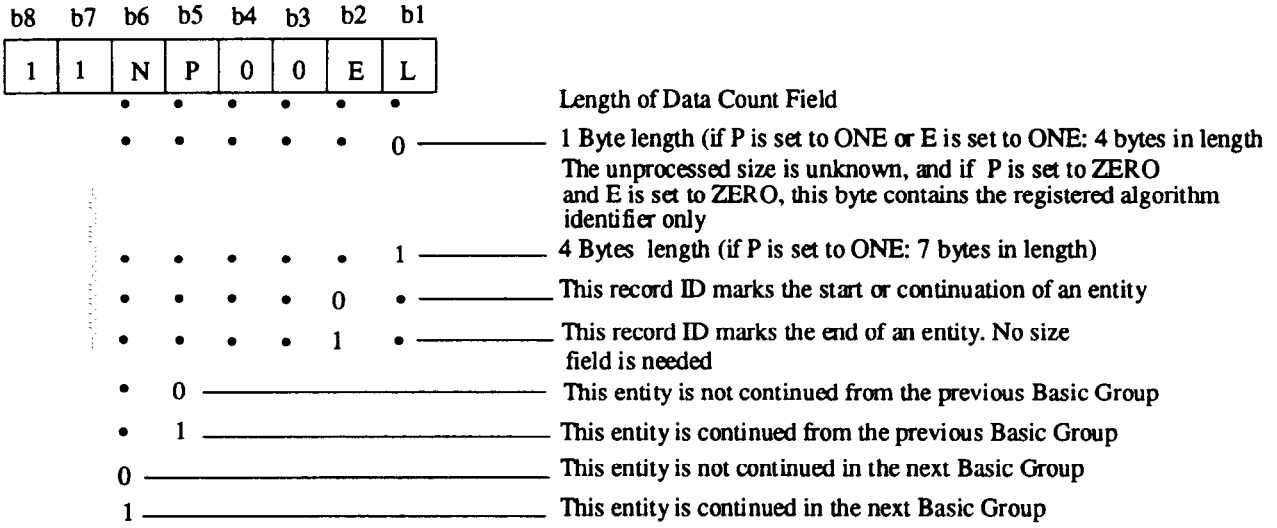

Figure 48 - Control Byte for entities

9.5.3.5.2 Data Count Field for entities

When bits b1, b2, b5 and b6 are set to ZERO, the data count field shall be 1 byte in length and shall contain the registered algorithm ID. The entity starts and ends in the current Group and the unprocessed size is unknown.

When bit b1 is set to ONE, and bits b2, b5 and b6 are set to ZERO, the data count field shall be 4 bytes in length. The first byte shall contain the registered algorithm ID and the remaining 3 bytes shall contain the processed size. The entity starts and ends in the current Group.

When bit b2 is set to ONE, and bits b1, b5 and b6 are set to ZERO, the data count field shall be 4 bytes in length, and this is the end of the entity. It shall contain the Start Record Number of the first record in the entity.

When bit b5 is set to ONE, and bits b1, b2 and b6 are set to ZERO, the data count field shall be 4 bytes in length and this is the continuation of an entity which ends in the current Group. It shall contain the Start Record Number of the first processed record in the entity, and the unprocessed size is unknown.

When bits b1 and b5 are set to ONE, and bits b2 and b6 are set to ZERO the data count field shall be 7 bytes in length, and this is the continuation of an entity which ends in the current Group. It shall contain the Start Record Number of the first processed record in the entity in the first 4 bytes and the processed size of that part of the entity within the current Group in the next 3 bytes.

When bit b6 is set to ONE, and bits b1, b2 and b5 are set to ZERO, the data count field shall be 1 byte in length and shall contain the registered algorithm ID. This is the start of an entity which does not end in the current group. The unprocessed size is unknown.

When bits b1 and b6 are set to ONE, and bits b2 and b5 are set to ZERO, the data count field shall be 4 bytes in length and shall contain the registered algorithm ID in the first byte and the processed size of that part of the entity within the current Group in the next 3 bytes. The entity starts but does not end in the current Group.

When bits b1 and b2 are set to ZERO, and bits b5 and b6 are set to ONE, the data count field shall be 4 bytes in length. It shall contain the Start Record Number of the first processed record in the entity. This is the continuation of an entity which does not start or end in the current Group, and the unprocessed size is unknown.

Copyright International Organization for Standardization
Provided by IHS under license with ISO
No reproduction or networking permitted without license from IHS
Not for Resale

When bits b1, b5 and b6 are set to ONE, and b3 is set to ZERO, the data count field shall be 7 bytes in length and shall contain the Start Record Number of the first processed record in the entity in the first 4 bytes, and the processed size of that part of the entity within the current Group in the next 3 bytes. This is the continuation of an entity which does not start or end in the current Group.

9.5.3.6 Record ID List Terminator

The last byte of the Record ID List, the Record ID List Terminator, shall be set to all ONEs. This Terminator indicates the termination of the Record ID List.

9.5.4 Heuristic Recovery Data Area

The content of this area shall be for local system use and shall be ignored for interchange.

10 Method of recording

The method of recording shall be:

- a ONE is represented by a flux transition at the beginning of a bit cell,
- a ZERO is represented by the absence of flux transitions in the bit cell.

10.1 Physical recording density

The maximum physical recording density shall be 3002 ftpmm. The resulting nominal bit cell length is 0,333 µm.

10.2 Long-Term average bit cell length

The long-term average bit cell length of each track shall be measured over its 128 Recorded Main Data Blocks (see 12.1). It shall be within ± 0,2 % of the nominal bit cell length.

10.3 Short-Term average bit cell length

The short-term average bit cell length, referred to a particular bit cell, shall be the average of the preceding twenty bit cells. It shall be within ± 0,35 % of the long-term average bit cell length for the preceding track of the same azimuth.

10.4 Rate of change

The above defined short-term average bit cell length shall not change at a rate greater than 0,05 % per bit cell.

10.5 Bit shift

The maximum displacement of any ONEs zero crossing, exclusive of missing pulses, shall not deviate by more than 28 % from the expected nominal position defined by the short-term average bit cell length. See annex H for the method of measurement.

10.6 Read signal amplitude

The average signal amplitude of an interchanged cartridge shall be

- at 83,4 ftpmm: between 60 % and 100 % of the nominal recorded level;
- at 333,6 ftpmm, 500,4 ftpmm, 1 001 ftpmm and 1 501 ftpmm: between 80 % and 118,9 % of the respective nominal recorded levels (annex F).

10.7 Maximum recorded levels

Recorded signals shall be erasable by overwriting. The limits imposed on the recorded levels for this reason are specified in annex F.

Copyright International Organization for Standardization
Provided by IHS under license with ISO
No reproduction or networking permitted without license from IHS
Not for Resale

11 Track geometry

11.1 Track configuration

The helical track pattern is formed by tape travel and rotation of a pair of heads, one of which has a positive and the other a negative azimuth angle. The track configuration shall be as shown in figure 49.

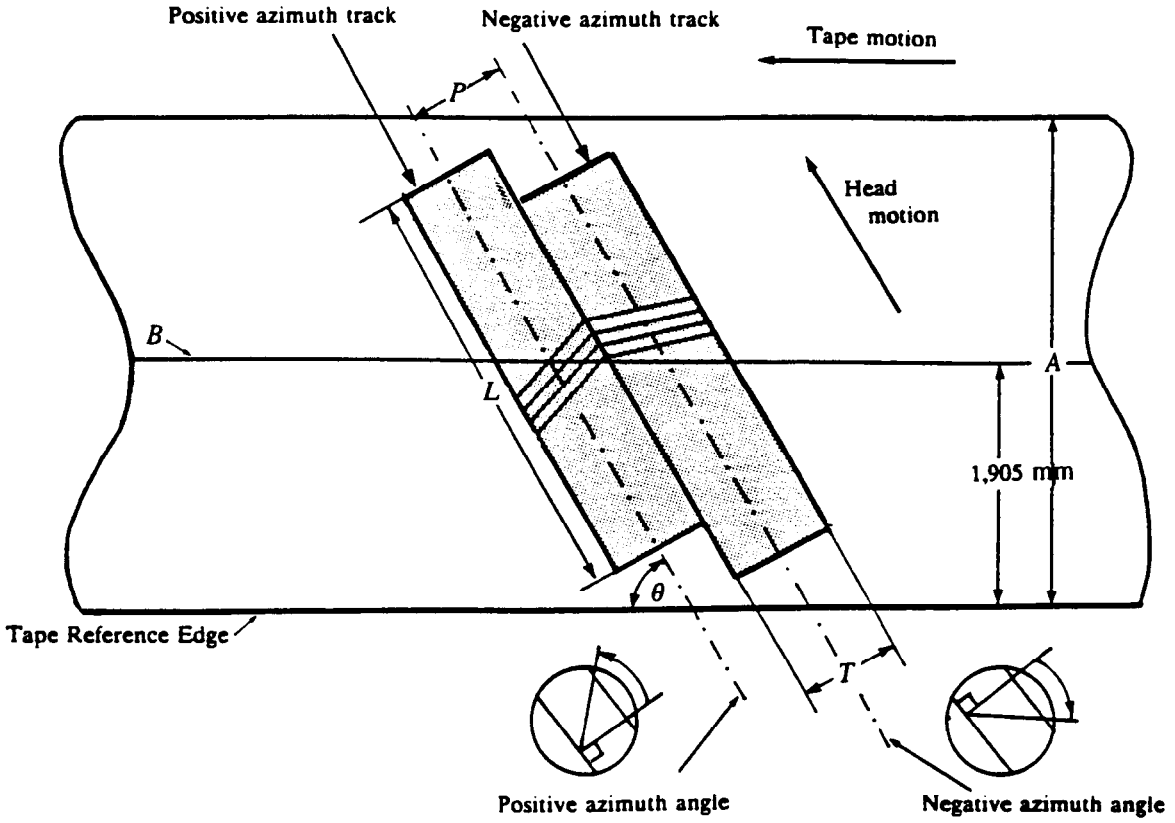

A	: Tape width
L	: Track length
P	: Track pitch
T	: Track width
B	: Track centre
θ	: Track angle

Figure 49 - Track Configuration (view on the recording surface)

11.2 Average track pitch

The average track pitch, taken over any group of 30 consecutive tracks, shall be 13,591 µm ± 0,068 µm, provided that the group does not contain a non-seamless append point (see 15.8.2) or the last track of an overwrite (see 15.9) or the first track following an overwrite. The track pitch of a non-seamless append point shall not be included in this average.

11.3 Variations of the track pitch

The change of track pitch between successive track pitches shall not exceed 2,0 %, excluding the effect of an appending operation (see 15.8).

Copyright International Organization for Standardization
Provided by IHS under license with ISO
No reproduction or networking permitted without license from IHS
Not for Resale

This requirement shall not apply at an append point, for the last track of an overwrite, and for the first track following an overwrite.

11.4 Track width

The nominal track width is 13,591 µm.

The measured track width shall be 13,6 µm ± 2,2 µm.

This requirement shall not apply at an append point, and for the first track following an overwrite.

11.5 Track angle

The angle of each track with respect to the Tape Reference Edge shall be 6° 22' 59,5" ± 36,0".

11.6 Track edge linearity

The linearity of the leading edge of each track shall be within 8 µm, when measured according to annex K.

11.7 Track length

The length of the track shall be 23,501 mm ± 0,047 mm.

11.8 Ideal tape centreline

The ideal centreline of the tape is 1,905 mm from the Reference Edge.

11.9 Azimuth angles

The positive azimuth angle shall be 20° 0' 59,5" ± 15' 0,0".

The negative azimuth angle shall be 19° 59,0' 0,5" ± 15' 0,0".

12 Recording of blocks on the tape

Each 8-bit byte of the Main Data Blocks and Sub Data Blocks shall be represented on the tape by a 10-bit pattern. annex G specifies for each 8-bit byte the 10-bit pattern to be recorded. The bits of the 10-bit pattern are called Channel Bits.

All information is recorded on the tape in units called Recorded Blocks. Each Recorded Block comprises 360 channel bits. The different types of Recorded Blocks are defined in the following clauses.

12.1 Recorded Main Data Block

A Recorded Main Data Block shall consist of 360 Channel Bits representing the 35 8-bit bytes of a Main Data Block preceded by a Sync field of 10 Channel Bits with one of the following patterns:

a) 0100010001

b) 1100010001

Pattern a) shall be used for Q' = -1, DC = 0, Q = 1; pattern b) for Q' = 1, DC = 0, Q = 1 (see annex G). Either pattern may be used when there is no preceding pattern, and hence not value of Q'.

12.2 Recorded Sub Data Block

A Recorded Sub Data Block shall consist of 360 Channel Bits representing the 35 8-bit bytes of a Sub Data Block preceded by a Sync field of 10 Channel Bits. The Channel Bit pattern of this Sync field shall be the same as that specified in 12.1 for Recorded Main Data Blocks.

Copyright International Organization for Standardization
Provided by IHS under license with ISO
No reproduction or networking permitted without license from IHS
Not for Resale

12.3 Margin Blocks, Preamble Blocks and Postamble Blocks

These blocks shall have a length of 360 Channel Bits consisting of the repeated Channel Bit pattern 111.

12.4 Spacer Blocks

These blocks shall have a length of 360 Channel Bits consisting of the repeated Channel Bit pattern 100.

13 Format of a track

13.1 Track capacity

Each track shall consist of 196 Recorded Blocks. In the following description of the track layout ATF designates a particular type of Recorded Block specified in 13.2.

A track comprises seven zones, the names and contents of which are shown in table 12.

Table 12 - Format of a Track

Zone	Contents	Number of Blocks
Margin Zone	Margin Blocks	11
Sub Zone 1	Preamble Blocks Sub Data Area Blocks Postamble Blocks	2 8 1
ATF Zone 1	Spacer Blocks ATF Blocks Spacer Blocks	3 5 3
Main Zone	Preamble Blocks Main Data Area Blocks	2 128
ATF Zone 2	Spacer Blocks ATF Blocks Spacer Blocks	3 5 3
Sub Zone 2	Preamble Blocks Sub Data Area Blocks Postamble Blocks	2 8 1
Margin Zone 2	Margin Blocks	11

196

Head motion

13.2 Positioning accuracy

The positioning of the start of the 99th block of a track, in the direction perpendicular to the Tape Reference Edge, shall be within 0,026 7 mm from the ideal tape centreline. This is equivalent to 2 blocks along the track.

13.3 Tracking scheme

Tracking is achieved by the automatic track finding (ATF) method. ATF blocks are allocated to two zones of a track: the ATF Zone 1 and the ATF Zone 2 preceding and following the Main Zone, respectively. ATF Blocks are preceded and followed by three Spacer Blocks and consist of 360 Channel Bits.

Each ATF Block consists of a combination of four signals having different Channel Bit patterns recorded at different physical recording densities. These signals are as follows:

Copyright International Organization for Standardization
Provided by IHS under license with ISO
No reproduction or networking permitted without license from IHS
Not for Resale

ATF Pilot Signal f_1

Repeated pattern: 1 followed by 35 ZEROs
density: 83,4 ftpmm

ATF Sync Signal f_2 or f_3

Repeated pattern f_2: 100000000
density: 333,6 ftpmm
Repeated pattern f_3 100000
density: 500,4 ftpmm

- ATF Sync Signal f_2 shall be recorded only on positive azimuth tracks.
- ATF Sync Signal f_3 shall be recorded only on negative azimuth tracks.
- ATF Sync Signals, whether f_2 or f_3, shall have a length of 180 Channel Bits on even numbered frames and of 360 Channel Bits on odd numbered frames.

ATF Space Signal f_4

Repeated pattern: 100
density: 1 001 ftpmm

The allocation of ATF signals to tracks is shown in figure 28. In this figure "spacer" stands for three Spacer Blocks and "Main Zone" for 130 recorded blocks. This allocation of ATF signals is repeated every four tracks, and is dependent on Frame Number (see 9.3.5.1.1).

NOTE 10 - An example of a tracking error detection algorithm is as follows:

First, the frequency and length of the ATF Sync Signal is detected. This is followed by sampling a crosstalk from the ATF Pilot Signal of an adjacent track. A fixed period later, the cross talk signal from the ATF Pilot Signal of the other adjacent track is sampled. The tracking error is the difference between the levels of those two crosstalk signals.

Copyright International Organization for Standardization
Provided by IHS under license with ISO
No reproduction or networking permitted without license from IHS
Not for Resale

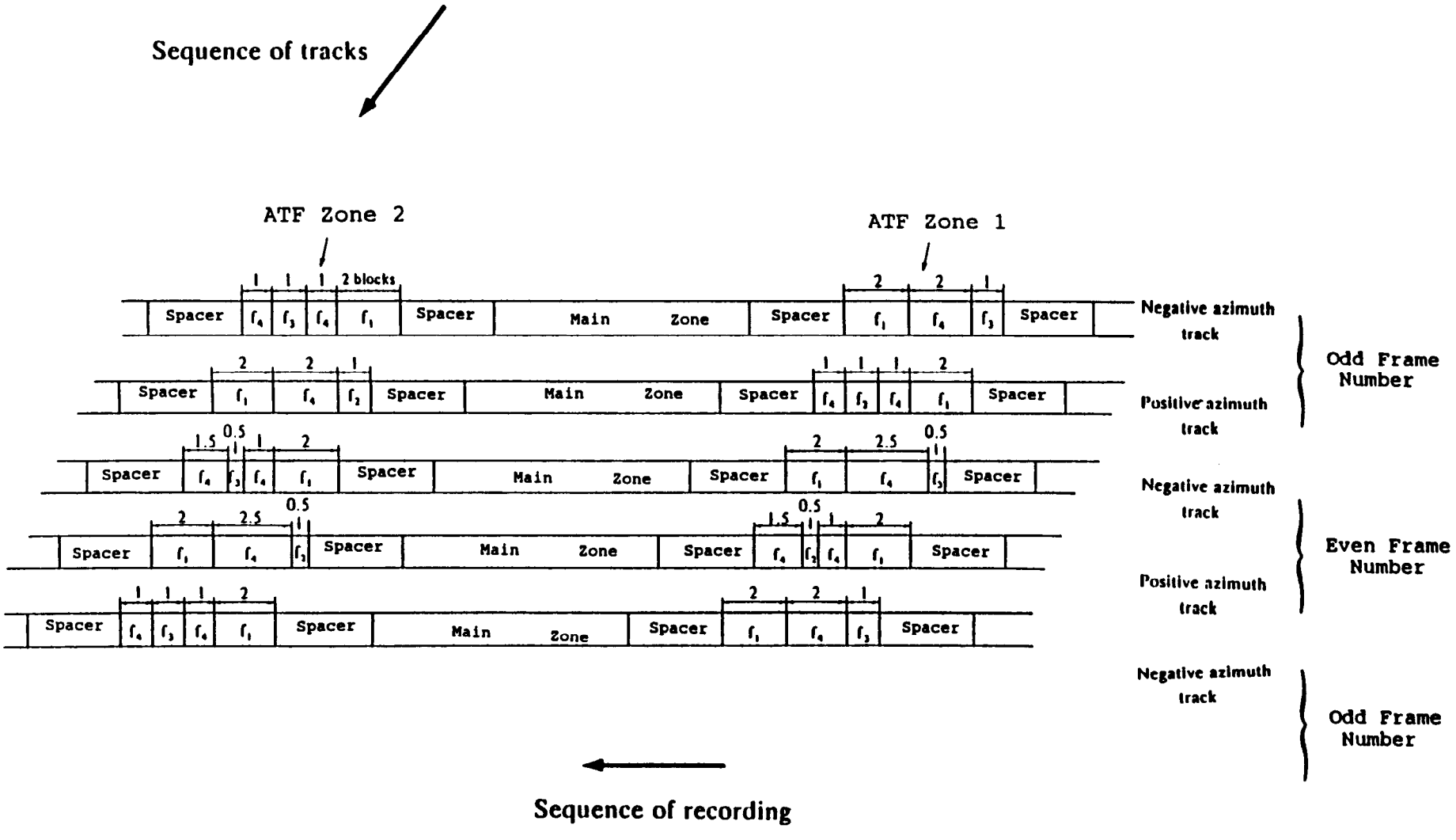

Figure 50 - ATF Signals allocation

Copyright International Organization for Standardization
Provided by IHS under license with ISO
No reproduction or networking permitted without license from IHS
Not for Resale

14 Group Formats

A group is the primary recording entity, it consists of frames each identified by a Frame Number. There are two group formats:

- Group Format 0 allows append and overwrite operations;
- Group Format 1 allows append operations only.

The selection of the Group Format is application-dependent. The Sub Data Area (see 9.4) contains a Group Format ID which allows the tape system to identify which Group Format has been implemented.

14.1 Group Format 0

A group in this format shall consist of 32 frames numbered from -3 to 28. Each group shall comprise

- Leading Gap Frames numbered from -3 to -1:
- Data Frames numbered from 0 to 27, which include the C3 parity;
- Trailing Gap Frame numbered 28.

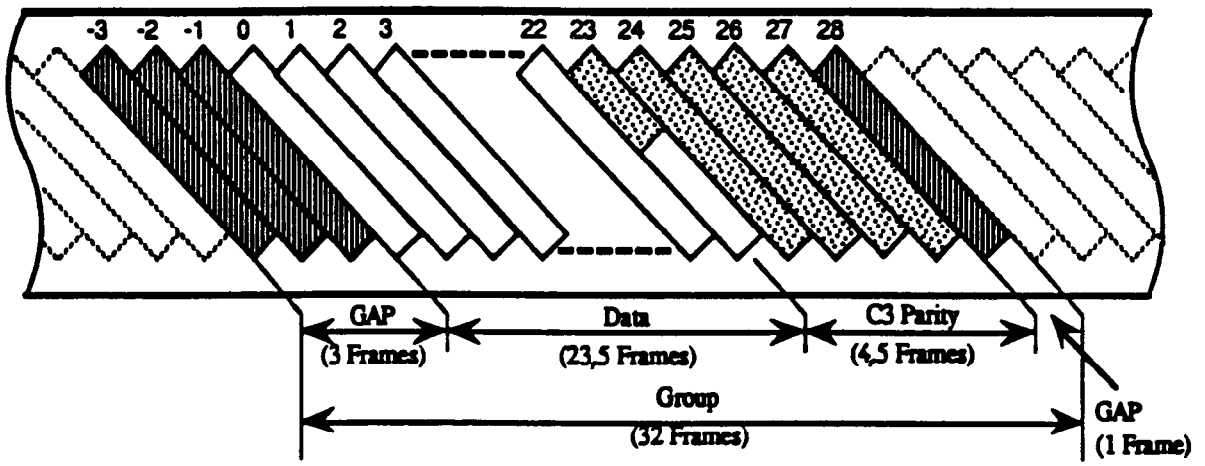

Figure 51 - Group Format 0

The contents of a Basic Group shall be recorded in the 28 Data Frames. The first G1 Sub-group shall be recorded in Data Frame No. 0, the second G1 Sub-group in Data Frame No. 1, etc.

14.2 Group Format 1

A group in this format shall consist of 45 Data Frames numbered from 0 to 45 which include C3 parity.

Copyright International Organization for Standardization
Provided by IHS under license with ISO
No reproduction or networking permitted without license from IHS
Not for Resale

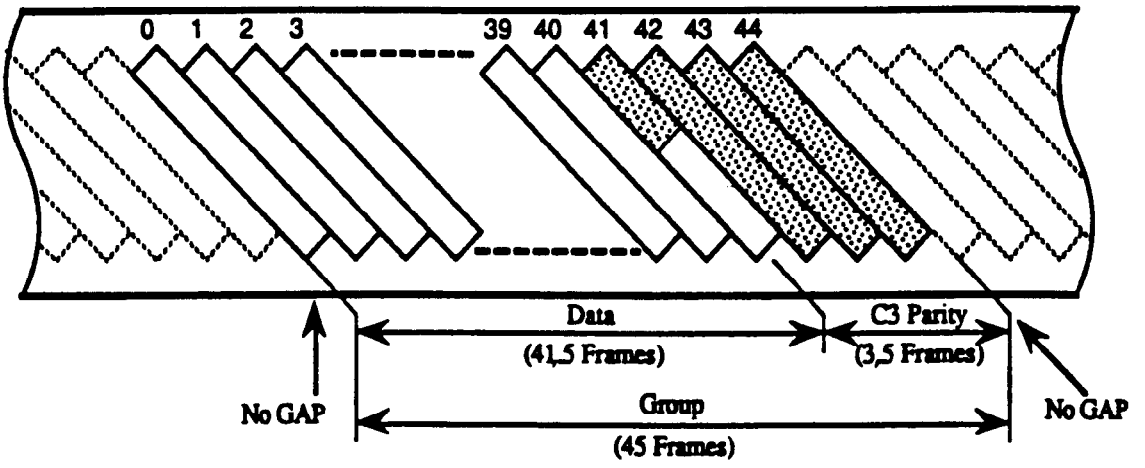

Figure 52 - Group Format 1

The contents of a Basic Group shall be recorded in the 45 Data Frames. The first G1 Sub-group shall be recorded in Data Frame No. 0, the second G1 Sub-group in Data Frame No. 1, etc.

14.3 Extended Gap Frames

An Extended Gap Frame shall not contain any data in its Main Data Blocks. Data shall be recorded only in its Sub Data Area, this data being dependent on the group which the Extended Gap Frame precedes or follows.

The content of the Sub Data Area shall be the same as that of the Sub Data Area of the group. In case of an overwrite operation, however, the content of the following fields of the Extended Gap Frames may be different from that of the corresponding fields of the group:

- Number of Records in a Group (Pack Item No. 4).
- Number of Separator 1's in a Group (Pack Item No. 5).
- Number of Separator 2's in a Group (Pack Item No. 6).
- Number of Separator 3's in a Group (Pack Item No. 7).

14.3.1 Extended Leading Gap Frames

These frames precede the group with which they are associated, but are not part of it.

The number of Extended Leading Gap Frames shall be between 0 and 256. These frames shall have negative Frame Numbers. They shall be numbered in ascending order ending at -4 (for Group Format 0) or at -1 (for Group Format 1), unless they start at -128. In this case the Frame Number -128 can be repeated either until the first frame of the group or until it enters the sequence of Frame Numbers at any point between -127 and -4 (for Group Format 0) or -1 (for Group Format 1).

14.3.2 Extended Trailing Gap Frames

These frames follow the group with which they are associated, but are not part of it.

The number of Extended Trailing Gap Frames shall be between 0 and 100 (for Group Format 0) or 83 (for Group Format 1). These frames shall have positive Frame Numbers starting at 28 (for Group Format 0) or at 45 (for Group Format 1) and increasing in ascending order up to a maximum value of 127.

14.4 Types of Groups

The groups in these Group Formats can be of different types.

Copyright International Organization for Standardization
Provided by IHS under license with ISO
No reproduction or networking permitted without license from IHS
Not for Resale

14.4.1 Normal Groups

A Normal Group shall contain data and system data together with the corresponding C3 parity bytes. The nature of this data depends on the area of the tape in which the group is recorded.

A Normal Group can be a Good Group or a Defective Group. If it is a Defective Group its content shall be re-located to a Spare Group (see 14.4.2).

The criteria according to which a Normal Group is declared defective are implementation-dependent and, thus, not specified by this International Standard.

Only the following groups can be Normal Groups:

- the Master Reference Group;
- Partition Reference Groups;
- Data Groups.

14.4.2 Spare Groups

The content of a Spare Group depends on its status.

14.4.2.1 Unused Spare Groups

An Unused Spare Group shall contain the appropriate Main Data ID, Sub Data ID and Pack Items. The content of its Main Data Blocks is unspecified, except their Headers.

14.4.2.2 Used Spare Groups

A Used Spare Group shall contain the appropriate Main Data ID, Sub Data ID and Pack Items. The data content of its Main Data Blocks shall be that of the Defective Group which has been re-located to this Used Spare Group.

14.4.2.3 Defective Spare Group

A Defective Spare Group is a Used Spare Group found defective. Its content shall be re-located as specified in 14.4.2.2 for Defective Groups.

The criteria according to which a Defective Spare Group is declared defective are application-dependent, and, thus, not specified by this International Standard.

14.4.2.4 Continuation Spare Group

A Continuation Spare Group is a Used Spare Group the Main Data Blocks of which contain data that is not the data of a Defective Group. This data is excess data resulting from an update-in-place operation.

14.4.3 Amble Groups

An Amble Group shall contain the appropriate Main Data ID, Sub Data ID and Pack Items. The content of its Main Data Blocks is unspecified, except their Headers.

Amble Groups shall not contain user data. They can be recorded in areas where tape wear is possible, or in areas where the tape should not be used.

14.4.4 Header Groups

The Header Groups shall be the only type of group having a group format different from Group Format 0 and from Group Format 1. The Header Group specifies whether Group Format 0 or Group Format 1, or both, are used.

Copyright International Organization for Standardization
Provided by IHS under license with ISO
No reproduction or networking permitted without license from IHS
Not for Resale

15 Magnetic tape layout

The layout of the magnetic tape consists of five areas:

- the Load/Unload Area
- the Lead-in area
- the Partition(s)
- the EOI
- the Unformatted Area

These areas are preceded by the leader tape and followed by the trailer tape.

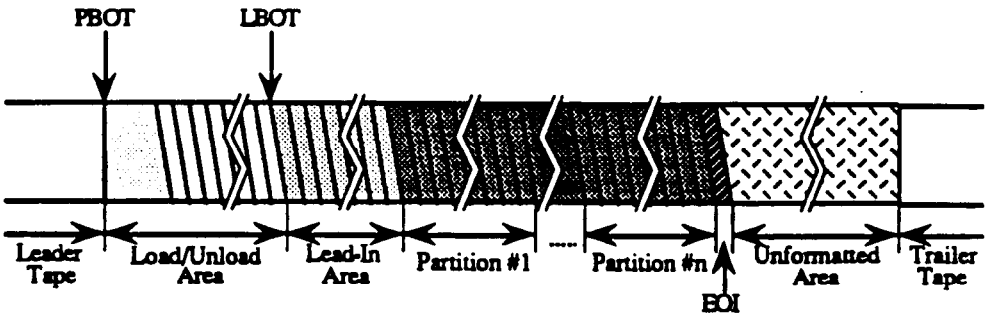

Figure 53 - Tape Format

15.1 Load/Unload Area

A loading operation consists of pulling the tape from its case, wrapping the tape around the drum, positioning the tape ready for use. An unloading operation consists of unwrapping the tape and returning it to the case.

The Load/Unload Area is the area to be touched by, or removed from, a cylinder and all mechanical parts external to the cartridge in a loading/unloading operation. The tape loading/unloading operation is done only in this area to avoid any possible damage to the rest of the tape.

The structure of the Load/Unload Area shall be as shown in figure 54.

The Physical Beginning of Tape (PBOT) shall be located at the point where the leader tape is joined to the magnetic tape.

The first group of the Load/Unload Area shall start within 100 mm from the PBOT.

There shall be more than 500 frames from a distance of 100 mm from the PBOT, to the last group of the Load/Unload Area.

The groups in the Load/Unload Area are Amble Groups. They contain no valid data in the Main Data Blocks, except the content of the Main ID.

Copyright International Organization for Standardization
Provided by IHS under license with ISO
No reproduction or networking permitted without license from IHS
Not for Resale

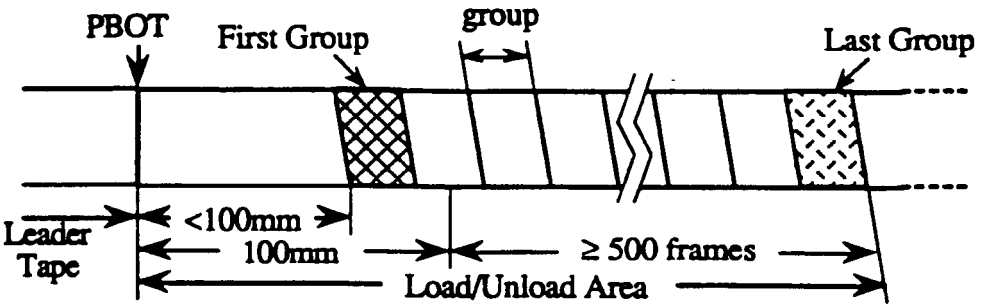

Figure 54 - Load/Unload Area

15.2 Lead-in Area

The structure of the Lead-in Area is shown in figure 55. This area shall follow from the Load/Unload Area and shall consist of Preamble, Header, Master Reference, and Postamble. The Logical Beginning of Tape (LBOT) shall mark the boundary between the Load/Unload Area and the Lead-in Area.

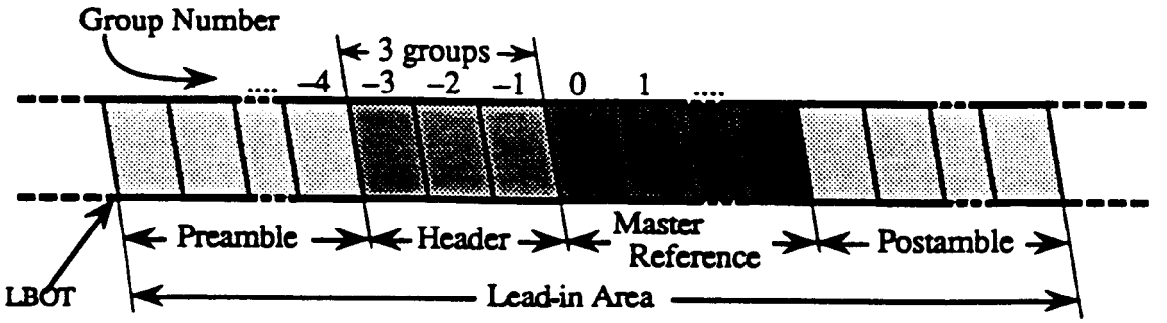

Figure 55 - Lead-in Area

15.2.1 Preamble

The Preamble shall consist of a variable number of Amble Groups.

15.2.2 Header

The header shall consist of three Header Groups. These groups are numbered -3, -2 and -1. The contents of each group in the header are the same. Each Header Group shall start with three Leading Gap Frames, shall have at least one Data Frame and shall be terminated by one Trailing Gap Frame. A Header Group can be preceded by an Extended Leading Gap Frame and/or followed by an Extended Trailing Gap Frame. The first Data Frame of each group (Frame Number 0) contains 4096 bytes of format information.

Only the first 4 096 bytes of the first Data Frame of each group shall contain information in the Main Data Blocks, all remaining bytes of the frame shall be set to ZERO. All the other frames in a Header Group shall be set to ZERO in the Main Data Area. There is no C3 ECC used. The data of the Data Frame(s) of the Header Groups are interleaved as specified for G3 and G4 Sub-groups (see 9.3.3; 9.3.4), they are not submitted to the procedure for G1 Sub-groups.

A header shall have at least one Format Parameter Set of 128 bytes. Up to 32 Format Parameter Sets can be recorded on a header. The format of a header shall be as shown in table 13.

Copyright International Organization for Standardization
Provided by IHS under license with ISO
No reproduction or networking permitted without license from IHS
Not for Resale

Table 13 - Data of a Header Group

Header Offset	Size (Byte)	Description
0	128	Format Parameter Set No. 1
128	128	Format Parameter Set No. 2
256	128	Format Parameter Set No. 3
:	:	:
3 968	128	Format Parameter Set No. 32

Format Parameter Sets shall be written in the Header Group in ascending order of the Group Format ID. The remainder of the first 4 096 bytes of the first Data Frame of the header shall be set to all ZEROs, or recorded with repeated Format Parameter Sets. Some examples are shown in tables 14 and 15.

Table 14 - Data of a Header Group - Example 1

Header Offset	Size (Byte)	Description	Contents
0	128	Format Parameter Set No. 1	for Group Format 0
128	128	Format Parameter Set No. 2	for Group Format 1
256	128	Format Parameter Set No. 3	all ZEROs
:	:	:	:
3 968	128	Format Parameter Set No. 32	all ZEROs

Table 15 - Data of a Header Group - Example 2

Header Offset	Size (Byte)	Description	Contents
0	128	Format Parameter Set No. 1	for Group Format 0
128	128	Format Parameter Set No. 2	for Group Format 1
256	128	Format Parameter Set No. 3	for Group Format 0
384	128	Format Parameter Set No. 4	for Group Format 1
512	128	Format Parameter Set No. 5	for Group Format 0
:	:	:	:
3 968	128	Format Parameter Set No. 32	for Group format 1

Copyright International Organization for Standardization
Provided by IHS under license with ISO
No reproduction or networking permitted without license from IHS
Not for Resale

15.2.3 Format Parameter Set

The contents of a Format Parameter Set shall be as shown in table 16.

Table 16 - Format Parameter Set (first part)

Offset	Size (byte)	Description	Value for Group Format 0	Value for Group Format 1
	FORMAT			
0	1	Number of Group Formats		
1	1	Group Format ID	0	1
2	1	Tape Format ID	Set to all ZEROs	
3	1	Tape Format ID Extension	32	
4	15	Format Name	DATA/DAT, (00), ..., (00)	
19	5	(not used)	Set to all ZEROs	
	TAPE			
24	4	(not used)	Set to all ZEROs	
28	1	(not used)	Set to all ZEROs	
29	1	(not used)	Set to all ZEROs	
30	1	Tape Number		
31	15	Tape Name		
46	1	(not used)	Set to all ZEROs	
47	3	Start Absolute Frame Number of Lead-in Area		
50	2	Number of Frames per Tape (in 256 Frames)		
52	4	(not used)	Set to all ZEROs	
	GROUP			
56	2	Number of Bytes per Frame	5 760	
58	1	Number of Data Frames per Group	28	45
59	1	Number of Leading Gap Frames	3	0
60	1	Number of Trailing Gap Frames	1	0
61	1	Location of System Data	(00)	
62	2	Length of System Data	4 736	Set to all ZEROs

Copyright International Organization for Standardization
Provided by IHS under license with ISO
No reproduction or networking permitted without license from IHS
Not for Resale

Table 16 - Format Parameter Set (concluded)

	C3ECC			
64	1	C3 Type	(00)	
65	1	Number of Code Symbols	38	64
66	1	Number of Code Words	32	59
67	2	C3 Unit Length	4 244	4 044
69	11	(not used)	Set to all ZEROs	
	DATE / TIME of TAPE CREATION			
80	2	Year		
82	1	Month		
83	1	Day		
84	1	Hour		
85	1	Minute		
86	1	Second		
87	1	Time Zone		
	not used			
88	38	(not used)	Set to all ZEROs	
	CHECKSUM			
126	2	Checksum		

15.2.3.1 Format

15.2.3.1.1 Number of Group Formats

This field shall specify the number of group formats defined in this Header.

15.2.3.1.2 Group Format ID

This field shall specify the Group Format to which the Format Parameter Set applies.

15.2.3.1.3 Tape Format ID

This field shall be set to all ZEROs, thereby indicating the tape layout specified in this International Standard.

15.2.3.1.4 Tape Format ID Extension

This field shall be set to 16.

15.2.3.1.5 Format Name

This field shall specify the following string.

DATA/DAT 0 0 0 0 0 0 0

These characters shall be coded according to the IRV of ISO/IEC 646.

Copyright International Organization for Standardization
Provided by IHS under license with ISO
No reproduction or networking permitted without license from IHS
Not for Resale

15.2.3.2 Tape

15.2.3.2.1 Tape number

This field shall specify the number of the current tape in a sequence of tapes. For example: 0 = First tape; 1 = Second tape, etc.

15.2.3.2.2 Tape name

This field shall contain the name assigned to this tape. The tape name shall be expressed by characters coded according to the IRV of ISO/IEC 646 followed by NULL characters, where applicable.

15.2.3.2.3 Start Absolute Frame Number of System Area

This field shall specify the Absolute Frame Number of the first frame of the System Area.

15.2.3.2.4 Number of Frames per Tape

This field shall specify the length of the tape in units of 256 frames. It shall be set to all ZEROs if the tape length is unknown.

15.2.3.3 Group

15.2.3.3.1 Number of bytes per Frame

This field shall specify the number of bytes of the G1 Sub-groups, viz. 5 760.

15.2.3.3.2 Number of Data Frames per Group

This field shall specify the number of Data Frames in a group.

15.2.3.3.3 Number of Leading Gap Frames

This field shall specify the number of Leading Gap Frames.

15.2.3.3.4 Number of Trailing Gap Frames

This field shall specify the number of Trailing Gap Frames.

15.2.3.3.5 Location of system data

This field shall be set to all ZEROs, thus indicating the system data is inter-spaced at the end of each unit.

15.2.3.3.6 Length of System Data

This field shall either specify the number of bytes for Group Format 0, viz. 4 736, or be set to all ZEROs for Group Format 1.

15.2.3.4 C3 ECC

15.2.3.4.1 C3 Type

This field shall be set to all ZEROs, thus indicating the C3 ECC interleave method specified by this International Standard.

15.2.3.4.2 Number of code bytes

This field shall specify the number of code bytes per code vector.

Copyright International Organization for Standardization
Provided by IHS under license with ISO
No reproduction or networking permitted without license from IHS
Not for Resale

15.2.3.4.3 Number of code words

This field shall specify the number of information words per code vector.

15.2.3.4.4 C3 unit length

This field shall specify the length of ECC unit in symbols.

15.2.3.5 Date/Time of tape creation

The following fields shall specify the date and the time when the Header was recorded on the tape. All figures shall be represented in BCD. If a figure is unknown the corresponding field shall be set to all ONEs.

15.2.3.5.1 Year

This field shall specify the year.

15.2.3.5.2 Month

This field shall specify the month.

15.2.3.5.3 Day

This field shall specify the day.

15.2.3.5.4 Hour

This field shall specify the hour.

15.2.3.5.5 Minute

This field shall specify the minute.

15.2.3.5.6 Second

This field shall specify the second.

15.2.3.5.7 Time zone

The time difference from GMT shall be expressed in halves of an hour. The most significant bit shall be the sign bit.

Examples:

10010010..... - 9
00011000..... +12
00001011..... +5,5
10001011..... - 5,5

15.2.3.6 Checksum

15.2.3.6.1 Procedure

The two bytes of the checksum of a Format Parameter Set shall be computed as follows:

Shift byte No. 2 to the left by one bit position. Perform an Exclusive OR operation, bit-wise, on byte No. 1 and the shifted byte No. 2. Shift byte No. 3 to the left by one bit position. Perform an Exclusive OR operation, bit-wise, on the Result (byte No. 1 + byte No. 2) and the shifted byte No. 3. Repeat until byte No. 126. Record the resulting bit pattern in bytes No. 127 and 128.

In this procedure, the shift register is set initially to all ZEROs.

Copyright International Organization for Standardization
Provided by IHS under license with ISO
No reproduction or networking permitted without license from IHS
Not for Resale

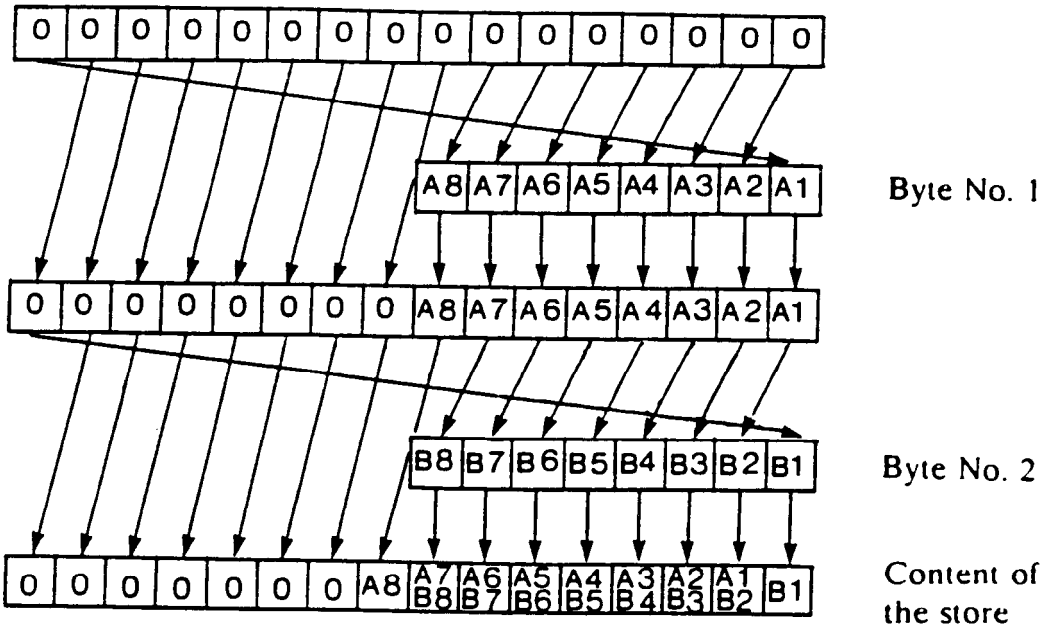

Figure 56 - Checksum procedure

15.2.3.6.2 Summary of the checksum computation

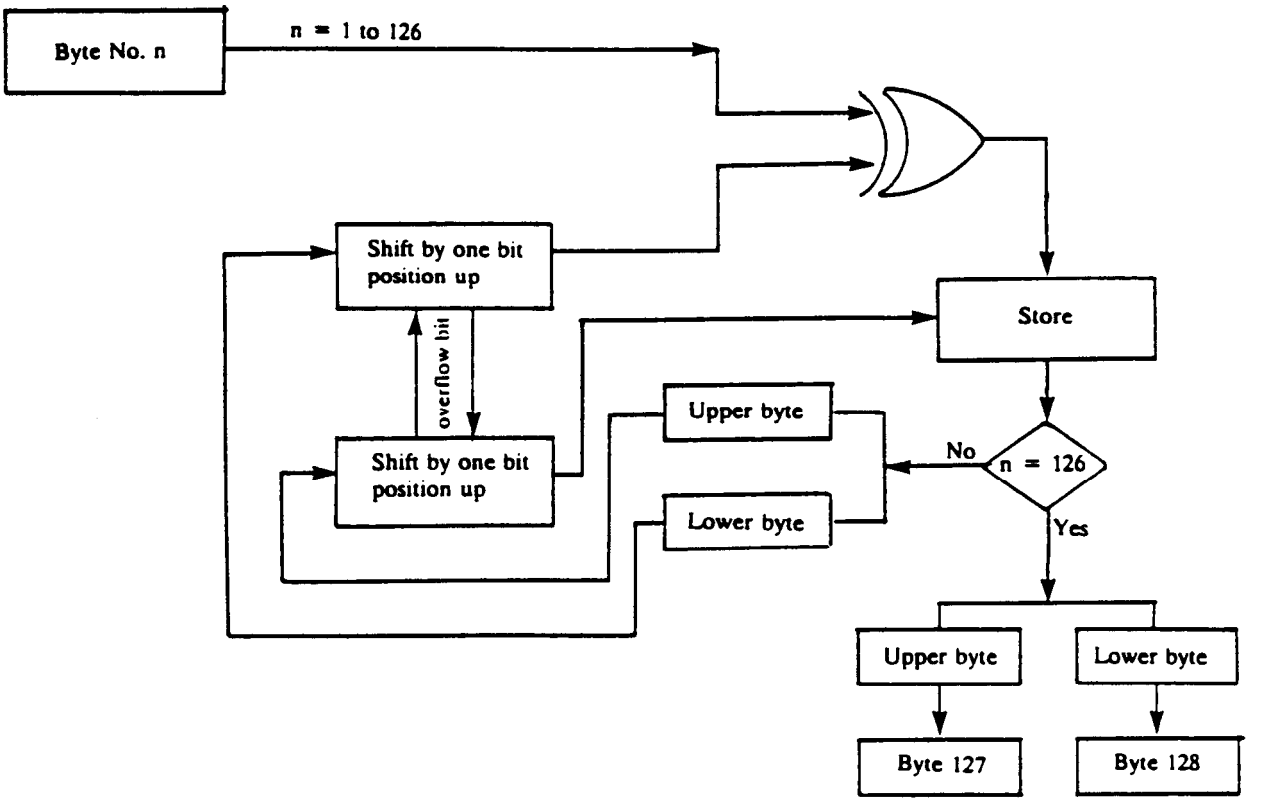

Figure 57 - Checksum summary

Copyright International Organization for Standardization
Provided by IHS under license with ISO
No reproduction or networking permitted without license from IHS
Not for Resale

15.2.4 Master Reference

The Master Reference shall consist of one Master Reference Group and of Spare Groups. All groups in the Master Reference Area shall be written in Group Format 0.

The information data and the system data of a Master Reference Group are structured like the User Data and the System data of a Basic Group, and processed in the same manner. The information data shall consist of 256 bytes of Tape ID and a Partition Entry List which shall have at least one Partition Entry (see table 17). The system data shall consist of a Group ID and of a Record ID List consisting only of a Terminator.

A Tape ID shall have the information related to the tape. A Partition Entry List is a list of Partition Entries which shall have the information about each partition. Partition Entries shall be listed so that the Partition Numbers are in ascending order.

Table 17 - Information Data of the Master Reference Group

Offset	Size (Byte)	Description
0	256	Tape ID
256	---	Partition Entry List

15.2.4.1 Tape ID

The first 256 information bytes of the Master Reference Group constitute the Tape ID. A Tape ID shall contain the information related to the tape. The contents of a Tape ID shall be as shown in table 18.

Table 18 - Tape ID

Offset	Size (Byte)	Description
0	1	Protection Byte
1	15	Password
16	1	Tape Number
17	15	Tape Name
32	3	Tape Flags (Deleted, Data Full)
33	2	Start Absolute Frame Number of the Lead-in Area
36	2	Set to all ZEROs
38	2	Number of Frames per Tape (in 256 frames)
40	1	Set to all ZEROs
42	1	Number of Groups of the Master Reference Area
43	2	Set to all ZEROs
44	2	Start Absolute Frame Number of First Partition Area
46	2	Set to all ZEROs
48	1	Set to all ZEROs
50	3	Set to all ZEROs
51	1	Absolute Frame Number of the EOI Group
54	1	Set to all ZEROs
55	8	Set to all ZEROs
56	63	Set to all ZEROs
64	1	Tape Comment
127	128	Number of partitions
128		Set to all ZEROs

Copyright International Organization for Standardization
Provided by IHS under license with ISO
No reproduction or networking permitted without license from IHS
Not for Resale

15.2.4.1.1 Protection Byte

The content of a Protection Byte shall be as shown in figure 58. The protection provided by the write-inhibit hole is independent from, and takes precedence over, that provided by the Protection Byte.

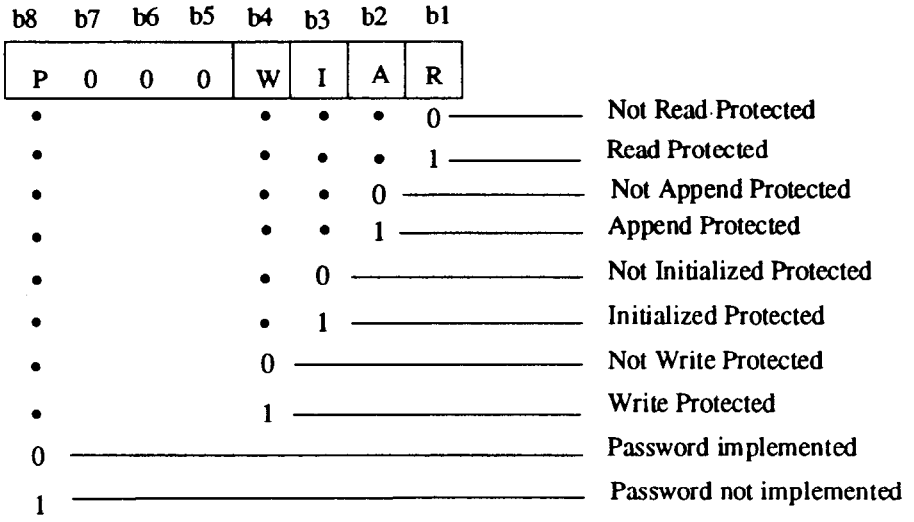

Figure 58 - Tape Protection Byte

"Password implemented", i.e. when bit b8 is set to ZERO, requires a password match in order to override the protection provided by bits b1 to b4 when they are set to ONE. When bit b8 is set to ONE, no overriding of this protection is possible.

"Read Protected" protects the information on the tape including the data in the Lead-in Area from being read by an external system if the proper password is not provided or if b8 is set to ONE.

"Append Protected" protects the information on the tape from being appended to if the proper password is not provided or if b8 is set to ONE.

"Initialize Protected" protects the information on the tape including the data in the Lead-in Area from being reformatted (or re-initialized) or deleted if the proper password is not provided or if b8 is set to ONE.

"Write Protected" protects the information on the tape including the data in the Lead-in Area from being overwritten if the proper password is not provided or if b8 is set to ONE.

15.2.4.1.2 Password

If bit b8 of the Protection Byte is set to ZERO, this field shall contain a password consisting of characters coded according to the IRV of Standard ECMA-6 followed by NULL characters, where applicable. This password is used together with the Protection Byte.

If bit b8 of the Protection Byte is set to ONE, the content of this field is not specified by this International Standard, and shall be ignored in interchange.

15.2.4.1.3 Tape Number

This field shall specify the same number as that specified in the Tape Number field of the Format Parameter Set (see 15.2.3.2.1).

Copyright International Organization for Standardization
Provided by IHS under license with ISO
No reproduction or networking permitted without license from IHS
Not for Resale

15.2.4.1.4 Tape Name

This field shall specify the same name as that specified in the Tape Name field of the Format Parameter Set (see 15.2.3.2.2).

15.2.4.1.5 Tape Flags

The contents of a Tape Flag shall be as shown in figure 59.

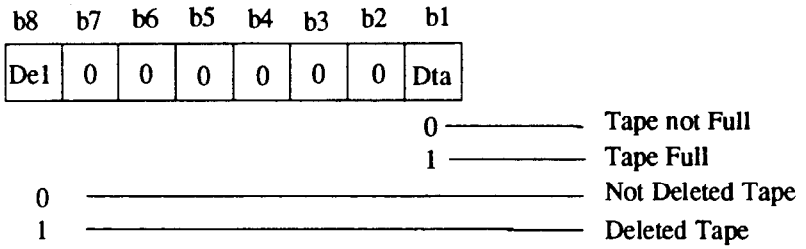

Figure 59 - Tape Flag

When the Del Bit, i.e. bit 8, is set to one, this shall mean that the whole tape has been logically deleted.

When the Dta Bit, i.e. bit 1 is set to ONE, this shall mean that an EOI reached to the end of the tape. In this case, no more new partition can be added to the tape. Data appending in reserved area of a partition is possible.

15.2.4.1.6 Start Absolute Frame Number of System Area

This field shall specify the Absolute Frame Number of the first frame of the first group of the Preamble of the Lead-in Area.

15.2.4.1.7 Number of Frames per Tape

This field shall specify the same number as that specified in the Number of Frame per Tape field of the Format Parameter Set (see 15.2.3.2.4).

15.2.4.1.8 Number of groups of Master Reference

This field shall specify the number of groups of a Master Reference.

15.2.4.1.9 Start Absolute Frame Number of the First Partition

This field shall specify the Absolute Frame Number of the first frame of the partition next to the Master Reference.

14.2.4.1.10 Absolute Frame Number of the EOI Group

This field shall specify the Absolute Frame Number of the first frame of the EOI group.

15.2.4.1.11 Tape Comment

This field shall contain an optional comment for this tape. The Tape Comment field shall consist of characters coded according to the IRV of International Standard ISO/IEC 646 followed by NULL characters, where applicable.

15.2.4.1.12 Number of partitions

This field shall specify the number of partitions on the tape, or the number of partition Entries in the Partition Entry List, excluding partitions identified by (00) and (FF).

Copyright International Organization for Standardization
Provided by IHS under license with ISO
No reproduction or networking permitted without license from IHS
Not for Resale

15.2.4.2 Partition Entry List

This field shall specify a list of Partition Entries which has information for the corresponding partitions, in ascending order of Partition Number (see table 19).

The Partition Entry List field shall be 128 bytes long, and a copy of the first 128 bytes of a Partition ID in a Partition Reference of a partition except some parameters (see 15.3.2.1).

Table 19 - Partition Entry List

Offset	Size (Byte)	Description
0	128	Partition Entry No. 1
128	128	Partition Entry No. 2
256	128	Partition Entry No. 3
:	:	:

15.2.4.3 Partition Entry

The contents of a Partition Entry shall be as shown in table 20.

Table 20 - Partition Entry

Relative Offset	Size (Byte)	Description
0	1	Partition Protection Byte
1	15	Partition Password
16	1	Partition Number
17	15	Partition Name
32	1	Partition Flags
33	3	Start Absolute Frame Number of the partition
36	1	Set to all ZEROs
37	3	Number of Frames in the partition
40	2	Set to all ZEROs
42	1	Number of Groups Partition Reference Area
43	1	Set to all ZEROs
44	2	Start Group Number of Partition Data
46	2	Start Second Group Number of Partition Data
48	4	Set to all ZEROs
52	2	Set to all ZEROs
54	10	Set to all ZEROs
64	63	Partition Comment
127	128	Set to all ZEROs

Copyright International Organization for Standardization
Provided by IHS under license with ISO
No reproduction or networking permitted without license from IHS
Not for Resale

15.2.4.3.1 Partition Protection Byte

The Protection Byte field shall specify the type of protection of the partition referred to by the Partition Entry (see figure 60). The protection provided by the write-inhibit hole is independent from, and takes precedence over, that provided by the Partition Protection Byte.

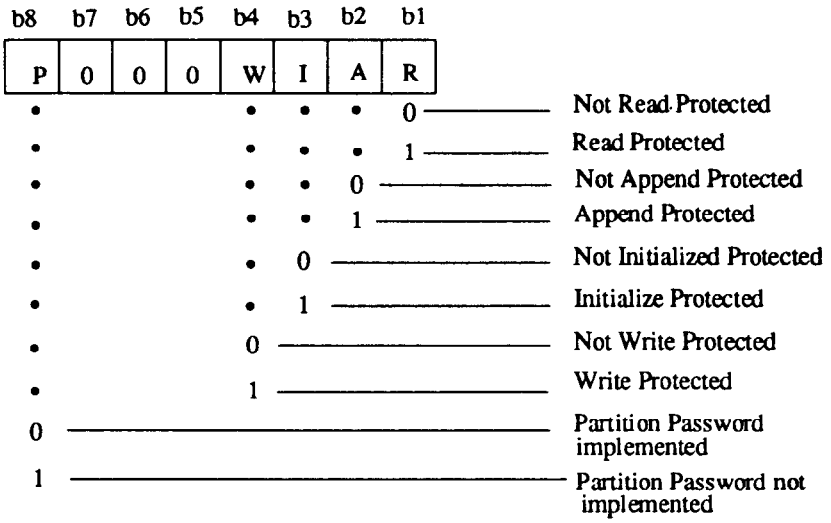

Figure 60 - Partition Protection Byte

"Partition Password implemented", i.e. when b8 is set to ZERO, requires a password match in order to override the protection provided by bits b1 to b4 where they are set to ONE. When bit b8 is set to ONE, no overriding of this protection is possible.

"Read Protected" protects the information on the partition including the data in the partition lead-in area from being read by an external system if the proper password is not provided or if bit b8 is set to ONE.

"Append Protected" protects the information on the partition from being appended to if the proper password is not provided or if bit b8 is set to ONE.

"Initialize Protected" protects the information on the partition including the data in the partition lead-in area from being reformatted (or re-initialized) or deleted if the proper password is not provided or if bit b8 is set to ONE.

"Write Protected" protects the information on the partition including the data in the partition lead-in area from being overwritten if the proper password is not provided or if bit b8 is set to ONE.

15.2.4.3.2 Partition Password

If bit b8 of the Partition Protection Byte is set to ZERO this field shall contain a password consisting of characters coded according to the IRV of ISO/IEC 646 followed by NULL characters, where applicable. This password is used together with the Partition Protection Byte.

If bit b8 of the Partition Protection Byte is set to ONE, the content of this field is not specified by this International Standard, and shall be ignored in interchange.

15.2.4.3.3 Partition Number

This field shall specify the same Partition Number as that specified by byte No. 2 of Pack Item No. 3 (see 9.4.3.1). It is the Partition Number of the partition referred to by the Partition Entry.

Copyright International Organization for Standardization
Provided by IHS under license with ISO
No reproduction or networking permitted without license from IHS
Not for Resale

15.2.4.3.4 Partition Name

This field shall contain the name assigned to this partition. The character of the Partition Name shall be coded according to the IRV of ISO 646 and followed by NULL characters, where applicable.

15.2.4.3.5 Partition Flags

The content of the Partition Flag shall be as shown in figure 61.

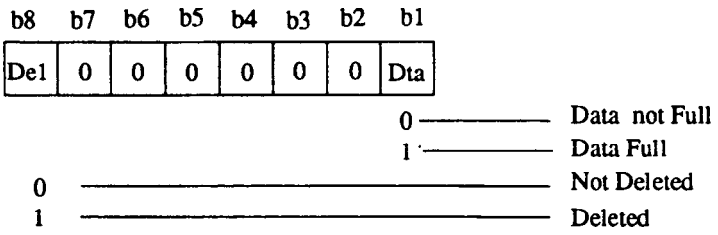

Figure 61 - Partition Flags

When the Del Bit, i.e. bit 8 is set to ONE, this shall mean that the whole partition has been logically deleted.

When the Dta Bit, i.e. bit 1 is set to ONE, this shall mean an EOP has reached the end of the partition area. In this case, no more data can be appended to the partition.

15.2.4.3.6 Start Absolute Frame Number of the partition

This field shall specify the Absolute Frame Number of the first frame of the Partition Preamble.

15.2.4.3.7 Number of Frames in the partition

This field shall specify the number of frames in the partition.

15.2.4.3.8 Number of Groups in Partition Reference

This field shall specify the number of groups in the Partition Reference.

15.2.4.3.9 Start Group Number of Partition Data

This field shall specify the Group Number of the first group in the Partition Data of the partition referred to by this Partition Entry.

15.2.4.3.10 Start Second Group Number of Partition Data

This field shall specify the Second Group Number of the first group in partition (see 15.7 for a description of the use of Second Group Numbers).

15.2.4.3.11 Partition Comment

This field shall contain an optional comment for the partition. The Partition Comment shall consist of characters coded according to the IRV of ISO/IEC 646 followed by NULL characters, where applicable.

15.2.5 Postamble

The Postamble shall consist of 0 or more Amble Group.

Copyright International Organization for Standardization
Provided by IHS under license with ISO
No reproduction or networking permitted without license from IHS
Not for Resale

15.3 Partition

The partition layout shall be as shown in figure 62.

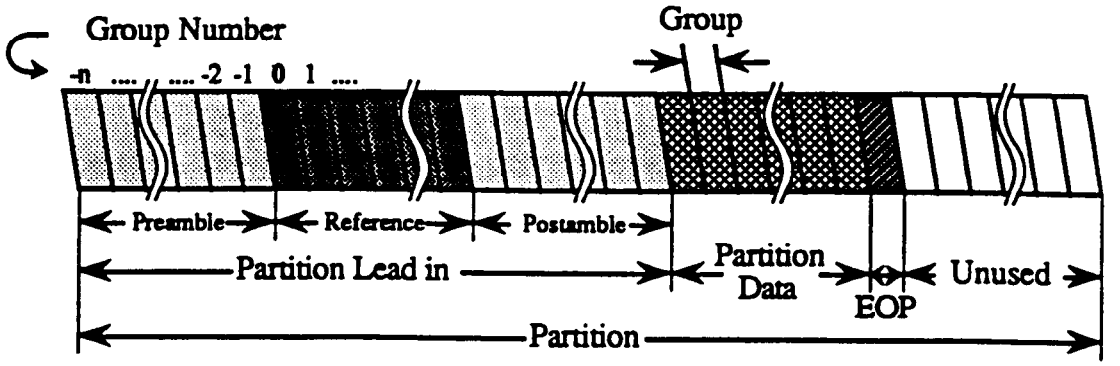

Figure 62 - Partition organization

15.3.1 Partition Preamble

The Partition Preamble shall consist of 0 or more Amble Groups.

15.3.2 Partition Reference

The Partition Reference shall consist of one Partition Reference Group and at least one Spare Group. These groups shall be written in Group Format 0.

The information data and the system data of a Partition Reference Group are structured like the User Data and the System Data of a Basic Group and processed in the same manner.

The information data shall consist of a 256-byte Partition ID and at least one Group Entry List. The system data shall consist of a Group ID and a Record ID List consisting only of a Terminator. An example is shown in table 21.

Table 21 - Partition Reference

Offset	Size (Byte)	Description
0	256	Partition ID
256	---	Group Entry List

15.3.2.1 Partition ID

The first 256 bytes of a Partition Reference shall be a Partition ID. A Partition ID shall contain the information related to the partition. See table 22.

Copyright International Organization for Standardization
Provided by IHS under license with ISO
No reproduction or networking permitted without license from IHS
Not for Resale

Table 22 - Partition ID

Offset	Size (Byte)	Description
0	1	Partition Protection Byte
1	15	Partition Password
16	1	Partition Number
17	15	Partition Name
32	1	Partition Flags
33	3	Start Absolute Frame Number of the partition
36	1	Set to all ZEROs
37	3	Number of Frames in the partition
40	2	Set to all ZEROs
42	1	Number of Groups in Partition Reference Area
43	1	Set to all ZEROs
44	2	Start Group Number of Partition Data
46	2	Start Second Group Number of Partition Data
48	4	Set to all ZEROs
52	2	Group Number of the EOP Group
54	10	Set to all ZEROs
64	63	Partition Comment
127	1	Number of Group Entry Lists
128	16	Group Entry List Descriptor No. 1
144	16	Group Entry List Descriptor No. 2
160	16	Group Entry List Descriptor No. 3
:	:	:
240	16	Group Entry List Descriptor No. 8

15.3.2.1.1 Partition Protection Byte

This field shall be set as the corresponding field of the Partition Entry (see 15.2.4.3.1).

15.3.2.1.2 Partition Password

This field shall specify the same password as that of the corresponding field of the Partition Entry (see 15.2.4.3.2).

15.3.2.1.3 Partition Number

This field shall specify the same number as that of the corresponding field of the Partition Entry (see 15.2.4.3.3).

15.3.2.1.4 Partition Name

This field shall specify the same name as that of the corresponding field of the Partition Entry (see 15.2.4.3.4).

15.3.2.1.5 Partition Flags

The bits of this field shall be set as those of the corresponding field of the Partition Entry (see 15.2.4.3.5).

15.3.2.1.6 Start Absolute Frame Number of the partition

This field shall specify the same number as that specified in the corresponding field of the Partition Entry (see 15.2.4.3.6).

--`,,```,,,,````-`-`,,`,,`,`,,`---

Copyright International Organization for Standardization
Provided by IHS under license with ISO
No reproduction or networking permitted without license from IHS
Not for Resale

15.3.2.1.7 Number of Frames in the partition

This field shall specify the same number as that specified in the corresponding field of the Partition Entry (see 15.2.4.3.7).

15.3.2.1.8 Number of Groups in Partition Reference Area

This field shall specify the same number as that specified in the corresponding field of the Partition Entry (see 15.2.4.3.8).

15.3.2.1.9 Start Group Number of Partition Data Area

This field shall specify the same number as that specified in the corresponding field of the Partition Entry (see 15.2.4.3.9).

15.3.2.1.10 Start Second Group Number of Partition Data Area

This field shall specify the same number as that specified in the corresponding field of the Partition Entry (see 15.2.4.3.10).

15.3.2.1.11 Group Number of the EOP Group

This field shall specify the Group Number of the EOP Group.

15.3.2.1.12 Partition Comment

This field shall specify the same contents as that of the corresponding field of the Partition Entry (see 15.2.4.3.11).

15.3.2.1.13 Number of Group Entry Lists

This field shall specify the number of Group Entry Lists in this Partition Reference.

15.3.2.2 Group Entry List Descriptor

A Group Entry List Descriptor shall contain a summary of the contents and status of the groups in the Partition Data. A Group Entry List Descriptor shall contain information related to each Group Entry List. For each Group Entry List there shall be a set of Group Entry List Descriptors (see table 23).

Table 23 - Group Entry List Descriptor

Size (Byte	Description
1	Record Type
1	Group Format ID
1	Set to all ZEROs
3	Point to the List
2	Spare Group Sets
2	Normal Group Sets
2	Start Group Number of the List
4	Set to all ZEROs

Copyright International Organization for Standardization
Provided by IHS under license with ISO
No reproduction or networking permitted without license from IHS
Not for Resale

15.3.2.2.1 Record Type

The Record Type field shall specify the type of the Group Entry List. Table 24 shows the characteristics of records depending on the type of the Group Entry List.

Table 24 - Record Type

Value	Type	Characteristics of records
(01)	Type A	Direct-addressed record. Fixed-length System Data Area
(02)	Type B	Sequential-addressed record. Fixed or variable length System Data Area.
(03)	Type C	Update-in-place addressed records. Fixed or variable length System Data Area. Can be accessed as both sequential and direct access data.

15.3.2.2.2 Group Format ID

The Group Format ID field (see 9.4.3.3, 14.1 and 14.2) shall specify the group format of groups specified by a Group Entry List.

15.3.2.2.3 Pointer to the List

This field shall specify the starting address of the corresponding Group Entry List. The address is an Offset Address (see annex M).

15.3.2.2.4 Spare Group Sets

This field shall specify the number of Spare Groups in a set of consecutive Spare Groups. If Spare Groups are not used, this field shall be set to 0 (see figure 63).

15.3.2.2.5 Normal Group Sets

This field shall specify the number of Normal Groups in a set of consecutive Normal Groups between sets of Spare Groups. If Spare Groups are not used, i.e. when the Spare Group Sets field is set to 0 the content of this field shall be ignored.

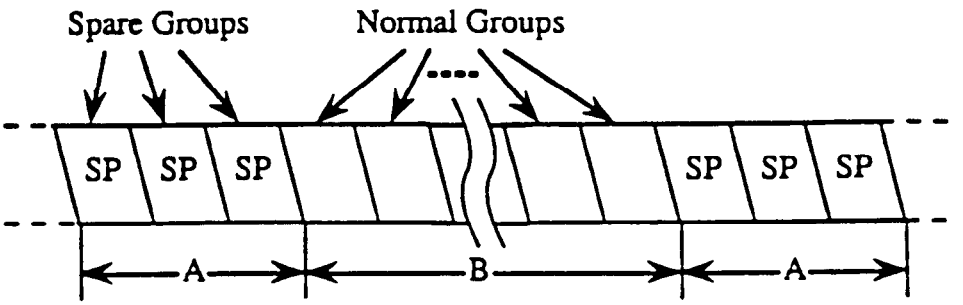

A: Consecutive Spare Groups

B: Consecutive Normal Groups

Figure 63 - Spare Group Sets and Normal Group Sets

Copyright International Organization for Standardization
Provided by IHS under license with ISO
No reproduction or networking permitted without license from IHS
Not for Resale

15.3.2.2.6 Start Group Number of the List

This field shall specify the Group Number of the first group described in the corresponding Group Entry List.

15.3.2.3 Group Entry List

The contents of a Group Entry List shall be as shown in table 25. The first Group Entry of the first Group Entry List shall correspond to the first group of the Partition Reference area. The following groups until EOP shall be included consecutively in the same or in a subsequent Group Entry List. The Group Entry List shall be terminated by one byte set to all ONEs.

Table 25 - Group Entry List

Size (Byte	Description
-	Group Entry (variable length)
-	Group Entry (variable length)
:	:
1	1 1 1 1 1 1 1 1

15.3.2.3.1 Group Entry for Type A

The Type A Group Entry consists of either 1 or 2 Flag Bytes, followed by count values which occupy 0, 2 or 4 bytes. (See figure 64). The presence of these count values depends upon the values specified in the Flag Bytes.

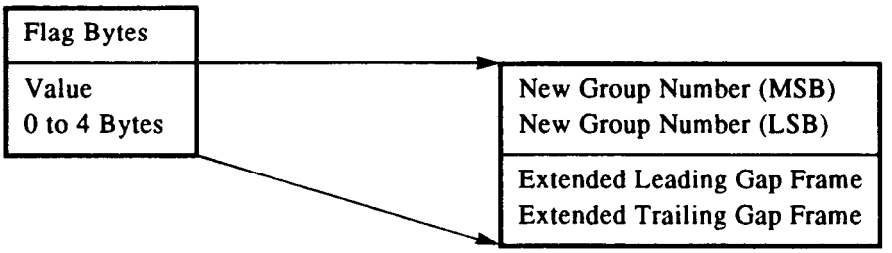

Figure 64 - Type A Group Entry

The format of the first Flag Byte for Type A Group Entries shall be as shown in figure 65, and the format of the second Flag Byte for Type A Group Entries shall be as shown in figure 66.

Copyright International Organization for Standardization
Provided by IHS under license with ISO
No reproduction or networking permitted without license from IHS
Not for Resale

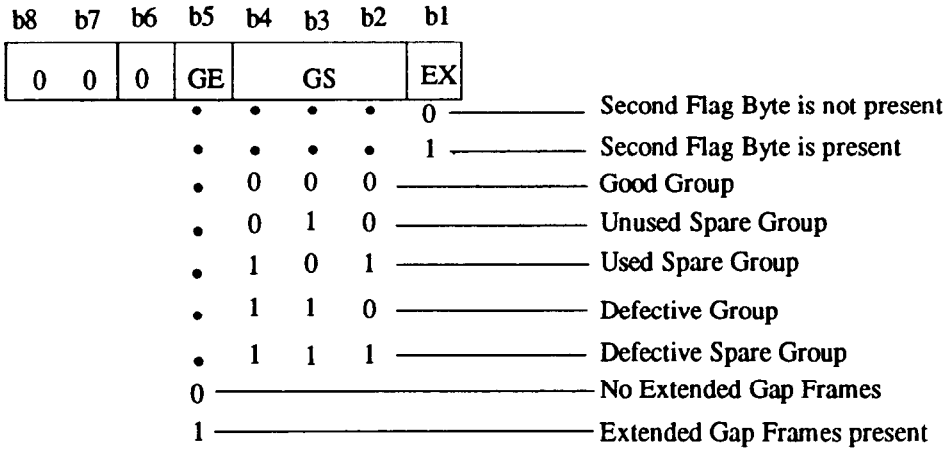

Figure 65 - First Flag Byte for Type A

Bit b1 of the First Flag Byte shall specify the number of Flag Bytes:

- if set to ONE, both Flag Bytes are present;
- if set to ZERO, only the first Flag Byte is present and the group to which the Group Entry refers is a Normal Group or a Spare Group.

Bits b2, b3 and b4 of the first Flag Byte shall specify the status of the group:

- if set to 000 (Good Group) or to 010 (Unused Spare Group) no New Group Number is specified;
- if set to 101 (Used Spare Group) the New Group Number shall specify the Second Group Number of the Defective Group which this Used Spare Group replaces;
- if set to 110 (Defective Group) or 111 (Defective Spare Group) the New Group Number shall specify the Group Number of the group which replaces this Defective Group or Defective Spare Group.

Bit b5 of the first Flag Byte shall specify whether or not Extended Gap Frames are present:

- if set to ONE, Extended Gap Frames are present. The number of Extended Leading Gap Frames shall be specified by the first and that of Extended Trailing Gap Frames by the second byte following the New Group Number bytes (if present);
- if set to ZERO, no Extended Gap Frames are present. The next Group Entry or a byte set to all ONEs shall follow the New Group Number (if present).

Bits b6, b7 and b8 shall be set to ZERO.

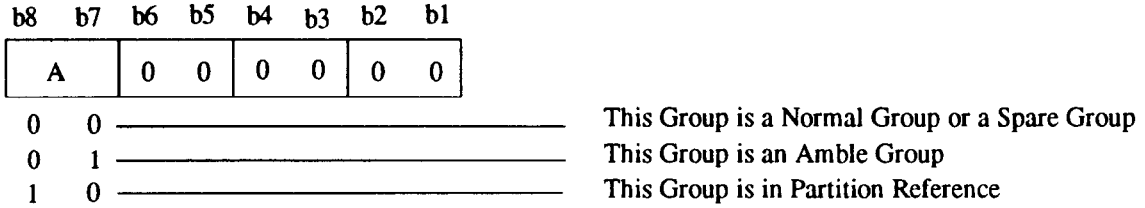

Figure 66 - Second Flag Byte for Type A

Bits b1 to b6 of the second Flag Byte shall be set to ZERO.

Bits b7 and b8 shall specify the location and the status of the group:

Copyright International Organization for Standardization
Provided by IHS under license with ISO
No reproduction or networking permitted without license from IHS
Not for Resale

- if set to 00, the group is a Normal Group or a Spare Group in the Partition Data;
- if set to 01, the group is an Amble Group;
- if set to 10, the group is a Normal Group or a Spare Group in the Partition Reference.

15.3.2.3.2 Group Entry for Type B

The Type B Group Entries shall consist of either 1 or 2 Flag Bytes, followed by count values which occupy 0 to 12 bytes (see figure 67). The presence of these count values depends upon the values specified in the Flag Bytes.

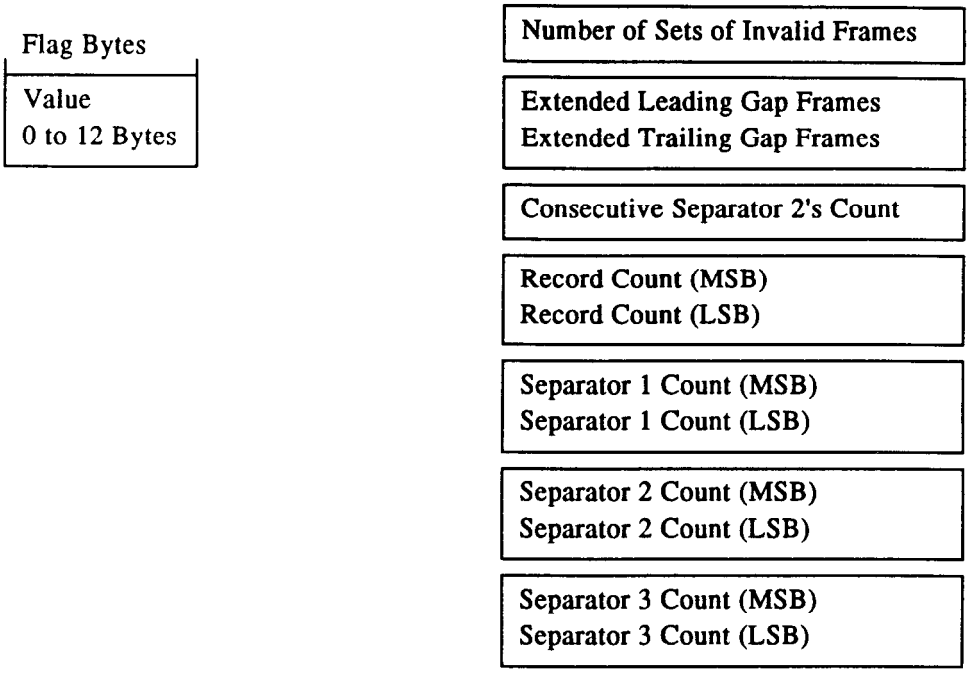

Figure 67 - Type B Group Entry

The format of the first Flag Byte for Type B Group Entries shall be as shown in figure 68 and that of the second Flag Byte for Type B Group Entries in figure 69.

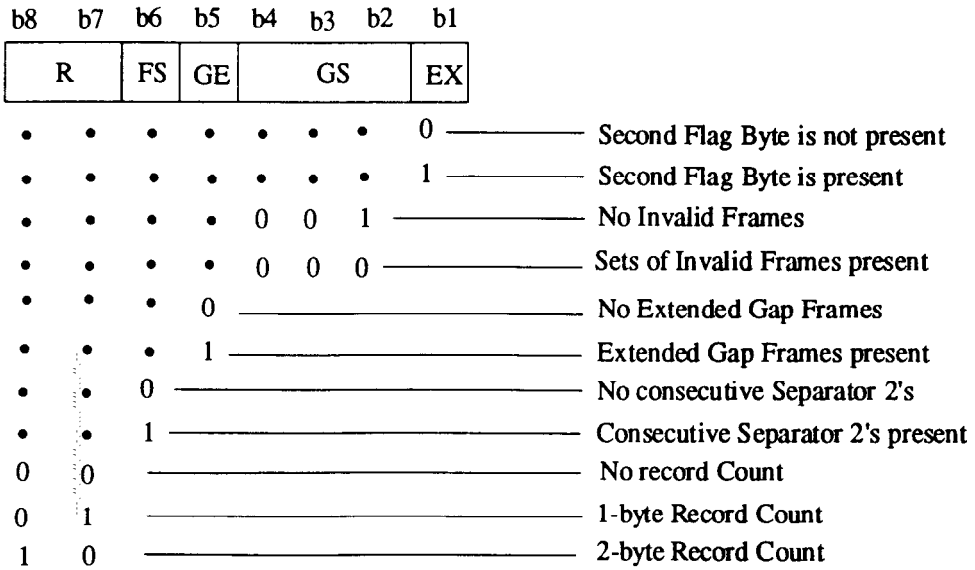

Figure 68 - First Flag Byte for Type B

Copyright International Organization for Standardization
Provided by IHS under license with ISO
No reproduction or networking permitted without license from IHS
Not for Resale

Bit 1 of the first Flag Byte shall specify the number of Flag Bytes present.

- if set to ONE, both Flag Bytes present;
- if set to ZERO, only the First Flag Byte is present and the group to which the Group Entry refers is a Normal Group or a Spare Group with no Separator Marks.

Bits b2, b3 and b4 of the first Flag Byte shall specify the status of the group.

- if set to 000, there are no Invalid Frames;
- if set to 001, the first count value shall specify the number of sets of Invalid Frames within the group.

Bits b5 of the first Flag Byte shall specify whether or not Extended Gap Frames are present.

- if set to ONE, Extended Gap Frames are present; the number of Extended Leading Gap Frames and of Extended Trailing Gap Frames shall be specified by the two bytes which follow the Number of Sets of Invalid Frames (if present);
- if set to ZERO, Extended Gap Frames are not present.

Bit b6 of the first Flag Byte shall specify if sequences of consecutive Separator 2's exist in the group (see figure 70):

- if set to ONE, one or more sequences of consecutive Separator 2's are present;
- if set to ZERO, no sequence of consecutive Separator 2's is present.

Bits b7 and b8 of the first Flag Byte shall specify the number of bytes of the Record Count that follows the Consecutive Separator 2's Count (if present).

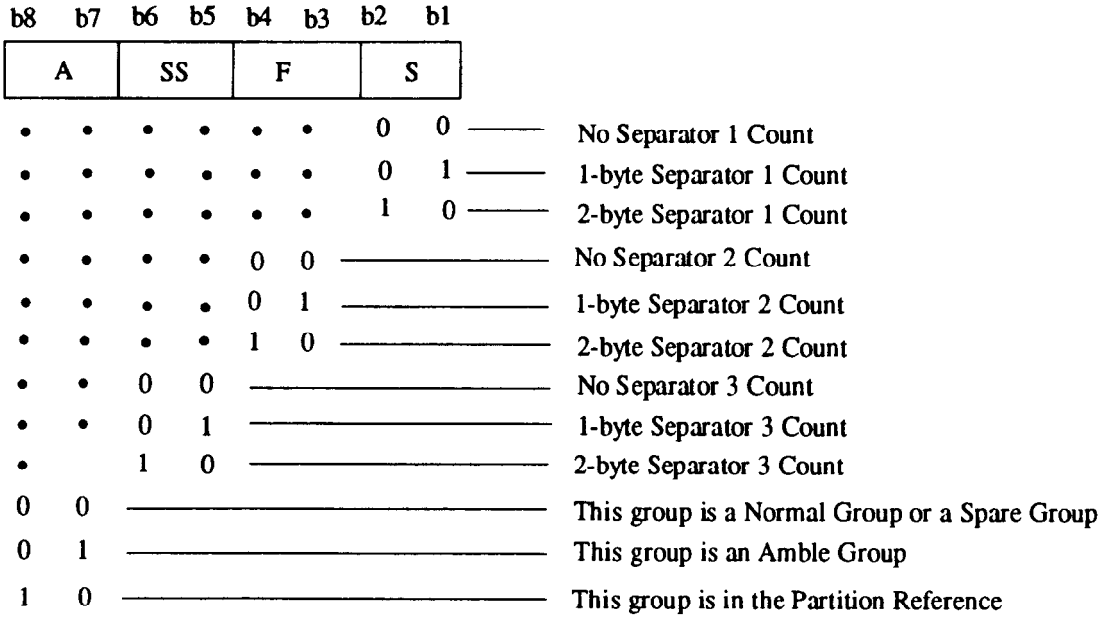

Figure 69 - Second Flag Byte for Type B

Bits b1 and b2 of the second Flag Byte shall specify the Separator 1 Count that may follow the Record Count (if present):

- if set to 00, there is no Separator 1 Count;
- if set to 01 the Separator 1 Count is specified by 1 byte;
- if set to 10 the Separator 1 Count is specified by 2 bytes.

Copyright International Organization for Standardization
Provided by IHS under license with ISO
No reproduction or networking permitted without license from IHS
Not for Resale

Bits b3 and b4 of the second Flag Byte shall specify the Separator 2 Count that may follow the Separator 1 Count (if present):

- if set to 00, there is no Separator 2 Count;
- if set to 01 the Separator 2 Count is specified by 1 byte;
- if set to 10 the Separator 2 Count is specified by 2 bytes.

Bits b5 and b6 of the second Flag Byte shall specify the Separator 3 Count that may follow the Separator 2 Count (if present):

- if set to 00, there is no Separator 3 Count;
- if set to 01 the Separator 3 Count is specified by 1 byte;
- if set to 10 the Separator 3 Count is specified by 2 bytes.

Bits b7 and b8 of the second Flag Byte shall specify the part of the partition to which the group belongs:

- if set to 00, the group is a Normal Group or a Spare Group in the partition;
- if set to 01, the group is an Amble Group;
- if set to 10, the group is a Normal Group or a Spare Group in the Partition Reference.

The field Consecutive Separator 2 Count of the Type B Group Entry, if present, shall have the format shown in figure 70.

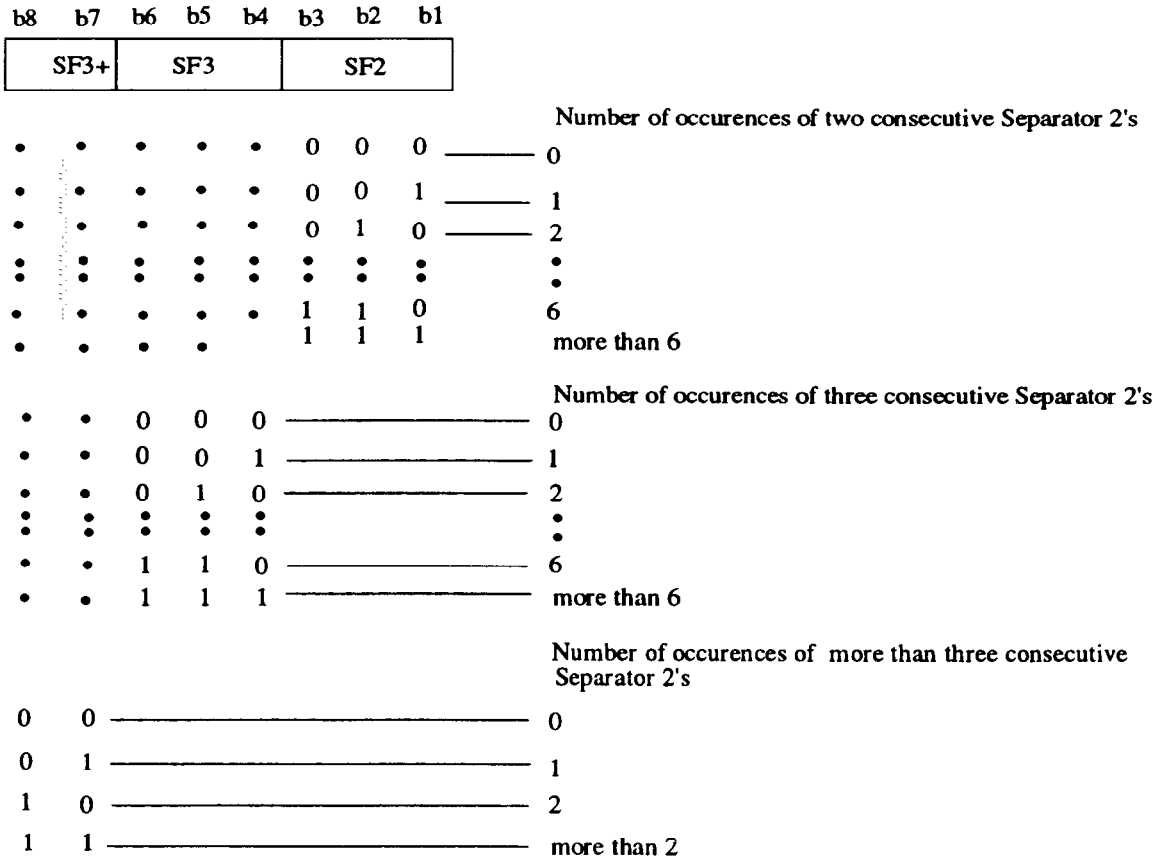

Figure 70 - Consecutive Separator 2's Count

15.3.2.3.3 Group Entry for Type C

The Type C Group Entry shall consist of either 1 or 2 Flag Bytes followed by count values which occupies 0 to 13 bytes (see figure 71). The presence of these count values or not depends upon the values specified in the Flag Bytes.

Copyright International Organization for Standardization
Provided by IHS under license with ISO
No reproduction or networking permitted without license from IHS
Not for Resale

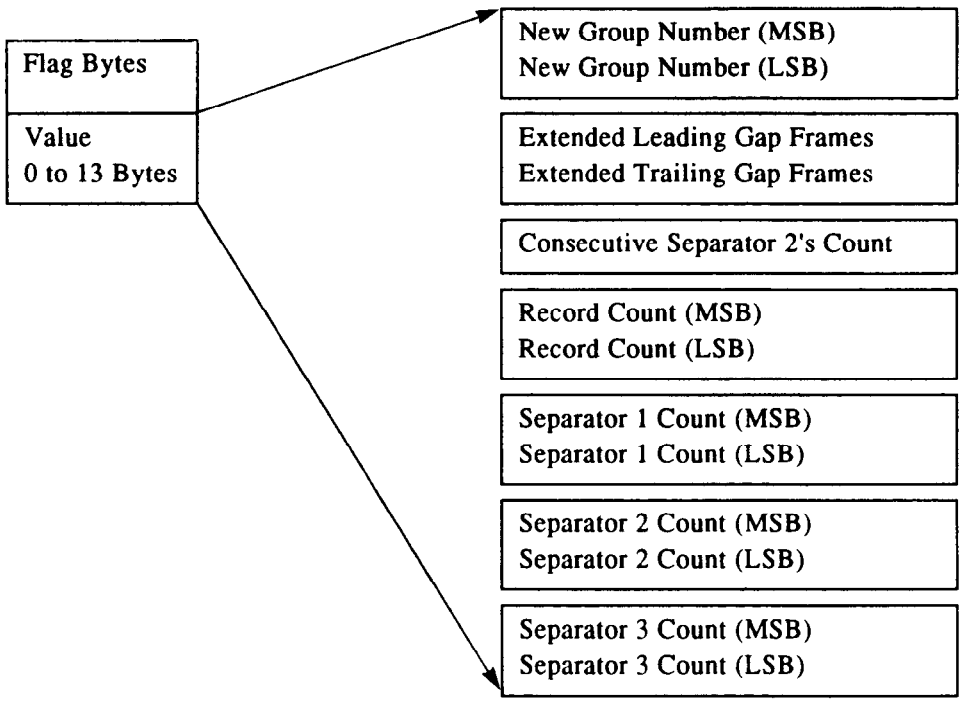

Figure 71 - Type C Group Entry

The format of the first Flag Byte shall be as shown in figure 72, the format for the second Flag Byte shall be as shown in figure 73. The format of the Separator 2's Count shall be the same as specified for Type B Group Entries (see figure 70).

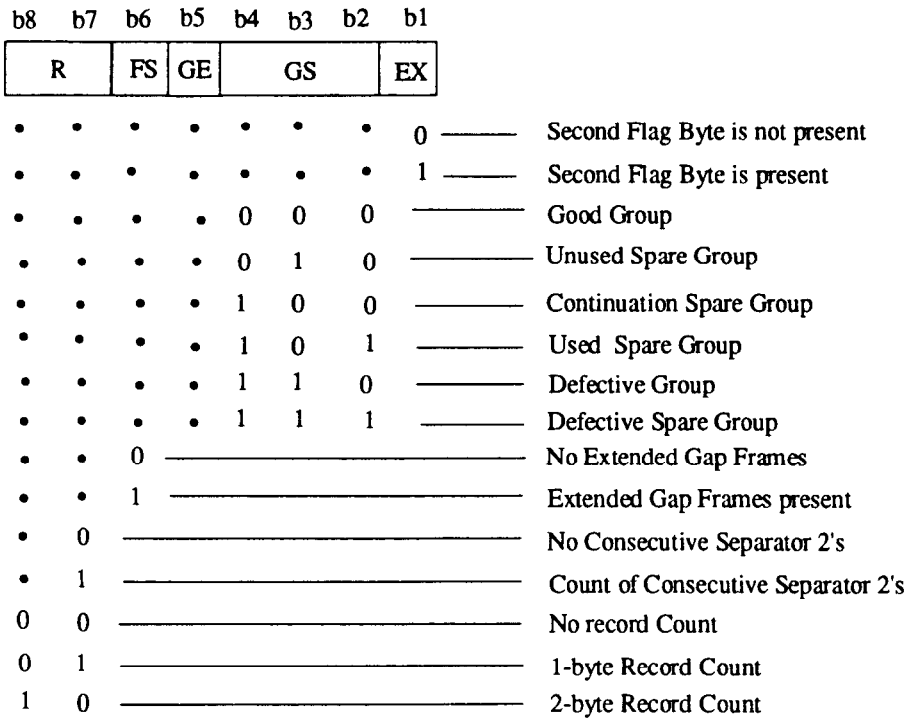

Figure 72 - First Flags Byte for Type C

Bit b1 of the first Flag Byte shall specify the number of Flag Bytes present:

Copyright International Organization for Standardization
Provided by IHS under license with ISO
No reproduction or networking permitted without license from IHS
Not for Resale

- if set to ONE, both Flag Bytes present;
- if set to ZERO, only the first Flag Byte is present and the group to which the Group Entry refers is a Normal Group or a Spare Group with no Separator Marks.

Bits b2, b3 and b4 of the first Flag Byte shall specify the status of the group:

- if set to 000 (Good Group) or 010 (Unused Spare Group) no New Group Number is specified;
- if set to 100 (Continuation Spare Group), the New Group Number shall specify an approximation of the number of unused bytes in the group, in units of 1 024 bytes;
- if set to 101 (Used Spare Group), the New Group Number shall specify the Second Group Number of the Defective Group which this Spare Group replaces;
- if set to 110 (Defective Group) or 111 (Defective Spare Group), the New Group Number shall specify the Group Number of the group which replaces this group.

Bit b5 of the first Flag Byte shall indicate if the group has Extended Gap Frames:

- if set to ONE, the number of Extended Leading Gap Frames and the number of Extended Trailing Gap Frames are specified by the two bytes following the New Group Number (if present);
- if set to ZERO, no Extended Gap Frames are present.

Bit b6 of the first Flag Byte shall specify if consecutive Separator 2's exist in the group:

- if set to ONE, consecutive Separator 2's are present;
- if set to ZERO, no consecutive Separator 2's are present.

Bit b7 and b8 of the first Flag Byte shall specify the number of bytes used in the Separator 2's Count, if present.

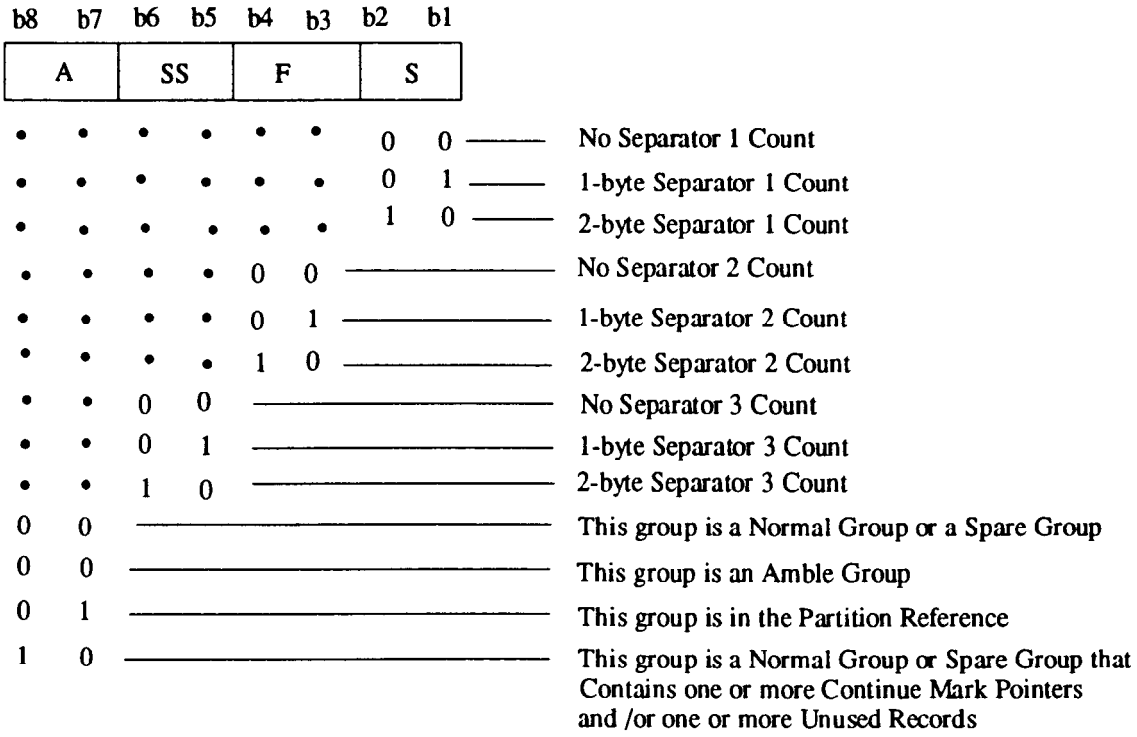

Figure 73 - Second Flag Byte for Type C

Bits b1 and b2 of the second Flag Byte shall specify the number of bytes in the Separator 1 Count.

Copyright International Organization for Standardization
Provided by IHS under license with ISO
No reproduction or networking permitted without license from IHS
Not for Resale

Bits b3 and b4 of the second Flag Byte shall specify the number of bytes in the Separator 2 Count.

Bits b5 and b6 of the second Flag Byte shall specify the number of bytes in the Separator 3 Count.

Bits b7 and b8 of the second Flag Byte shall specify the status and/or the location of the group:

- if set to 00, the group is a Normal Group or a Spare Group in the Partition Data;
- if set to 01, the group is an Amble Group;
- if set to 10, the group is a Normal Group or an Amble Group in the Partition Reference.
- if set to 11, the group is a Normal Group or a Spare Group in the Partition Data, and contains one or more Continue Mark Pointers and/or one or more Unused Records.

15.3.3 Partition Postamble

The Partition Postamble shall consist of zero or more Amble Groups.

15.3.4 Partition Data

The Partition Data shall contain user data. Within the Partition Data there are three types of groups: Data Groups, Spare Groups and Amble Groups.

In order to facilitate update-in-place, the overwrite of a file or set of records in a sequential file structure, two other marks are defined. These are the Continuation Mark and the Continuation Mark Pointer. The Continuation Mark is used to indicate the start of data which has been continued from a non-contiguous record within the current group or a different group, and to indicate the end of information contained in the previous contiguous record. The Continuation Mark Pointer is used to indicate that the current set of records is continued following the Continuation Mark (usually in a Spare Group) referred to by this Continuation Mark Pointer. The continuation of the set of records ends at the first unused record or mark (a Separator or a Continuation Mark). The Continuation Mark and the Continuation Mark Pointer are used together to allow a unit of data to replace an older unit of data that is of smaller size.

15.3.4.1 Data Groups

Data Groups shall be Normal Groups which contain the user data written in the Partition Data. The contents of Data Groups affect the running counts in Pack Items No. 4 and No. 7.

15.3.4.2 Amble Groups

This International Standard does not limit the number and the position of Amble Groups in a Partition Data.

15.3.4.3 Spare Groups

The contents of Spare Groups do not affect the running counts in Pack Items No. 4 and No. 7.

15.3.4.4 Last Group of the Partition Data

The last group of the Partition Data can be a Data Group, an Amble Group or a Spare Group.

If the group is written in Group Format 0, it shall be followed by at least 1 Extended Trailing Gap Frame.

If the group is written in Group Format 1, it shall be followed by at least 2 Extended Trailing Gap Frames.

15.3.5 End of Partition (EOP)

An EOP (End of Partition) area shall consist of an Amble Group that either has at least three Leading Gap Frames or is preceded by at least three Extended Leading Gap Frames. This Amble Group shall be placed after the last group of the Partition Data. The Group Number of this group shall be equal to the Group Number of the last group of Partition Data augmented by 1.

An EOP indicates the end of Partition Data.

--`,,```,,,,````-`-`,,`,,`,`,,`---

Copyright International Organization for Standardization
Provided by IHS under license with ISO
No reproduction or networking permitted without license from IHS

Not for Resale

The Partition Initialization Count of the EOP shall be set to "i-1" where "i" is the Partition Initialization Count of the groups before EOP in the current partition.

15.3.6 Unused Area

An Unused Area can be continued from an EOP. It consists of groups or frames and is not assumed to contain recorded information. The Unused Area sets aside room for appending to the Partition Data Area. The next partition is continued from the end of an Unused Area or EOP.

The Partition Initialization Count of the Unused Area shall be different from the Partition Initialization Count of the groups of the Partition Data.

In the Pack Items of the Unused Area only the following data must always be valid:

- Bytes No. 1 and No. 8 in all Pack Items
- Absolute Frame Number in Pack Item No. 1
- Initialization Count in Pack Item No. 2
- Partition Number in Pack Item No. 3
- Partition Initialization Count in Pack Item No. 3.

15.4 EOI

The EOI (End of Information) shall indicate the end of the formatted part of the tape, and may be followed by an unformatted part. An EOI shall consist on an Amble Group placed after the last partition or after the unused area of the last partition on the tape.

In all areas from the first group of Load/unload Area up to the EOI Group, excluding the EOI Group, every group and frame shall have the same Initialization Count.

The Initialization Count of EOI shall be set to "i-1", where "i" is an Initialization Count of groups before EOI.

The Initialization Count of groups after EOI shall be different from that of the groups and frames in the area before EOI.

15.5 Repeated Groups

In Group Format 1, a Normal Group may be repeated any number of times. If, within the same partition, two or more groups have the same Group Number, the group with the lower Absolute Frame Numbers shall be the original group and the other copies of it.

In the Group Entry List there shall be only one single entry for all occurrences of the group.

If between any two occurrences of a group there exist 1 to 45 frames associated with, or being part of, a group having a different Group Number from that of the repeated group, then these frames are Invalid Frames and recorded as such in the Group Entry List.

15.6 Repeated Frames within a Normal Group

In Group Format 1, within a Normal Group a frame can be repeated. The maximum number of Intermediate Frames between a frame and its copy shall be 44 frames. If within the same group two frames have the same Frame Number, the frame with the lower Absolute Frame Number shall be the original frame and the other the copy of it.

The sequence consisting of the original frame, the Intermediate Frames (up to 44) and the copy of the original frame can be repeated any number of times.

If between any two occurrences of a frame there exist 1 to 44 frames having a Group Number different from that of the repeated frame, then these frames are Invalid Frames and recorded as such in the Group Entry List.

Copyright International Organization for Standardization
Provided by IHS under license with ISO
No reproduction or networking permitted without license from IHS
Not for Resale

15.7 Relocation of Defective Groups

If a Good Group written in Group Format 0 is declared defective, its content shall be relocated into a Spare Group. The criteria according to which a Good Group is declared defective are application-dependent and, thus, not specified by this International Standard.

The Group Status field in the Main ID and in the Group ID of the Defective Group shall identify it as a Defective Group and its New Group Number shall contain the Group Number of the Used Spare Group into which its content has been transferred. To ensure readability of the New Group Number in the Defective Group, it shall be written repeatedly in the User Data Area of the Defective Group. The MSB of the New Group Number shall be written at all even byte positions and LSB at all odd byte positions.

The Used Spare Group shall contain the User Data for the original Good Group found defective. The System Data of the Used Spare Group shall be changed to contain the System Data of the original Good Group with the following exceptions in the Group ID List:

- the Group Status shall be changed to Used Spare Group,
- the New Group Number shall be changed to the Second Group Number of the original group.

The Group Number, the Second Group Number and the Not Normal Group Flag of the Used Spare Group, as well as its Pack Items shall remain unchanged.

The Group Status and the New Group Number(s) of the Defective Group and of the Used Spare Group shall be recorded in the Group Entry List, except in the case of a Master Reference Group.

15.8 Appending

In Group Format 0, a group can be appended after any other group in the Partition Data. Once a group has been appended, any data which was previously written further down the current partition becomes logically inaccessible and shall be marked as Unused Area.

In Group Format 1, a new group can only be appended to the end of the current Partition Data.

In either Group Format, when appending to the end of the Partition Data, the old EOP is overwritten with the new data and a new EOP is written after the new data.

A group can be written after any other group on the tape.

Data may be appended to the tape by either the seamless or non-seamless methods. An append operation may be described as seamless only if the appended tracks are placed as if they were written in a continuous sequence. No tracks are partially overwritten to a point of being un-readable nor are any gaps left between tracks. The drive's servo system will not, therefore, encounter a discontinuity between the existing tracks and the appended tracks during reading. To achieve a seamless append, the tolerances described in figure 75 and the rules in 15.8.1.1 shall apply. To achieve a non-seamless append the rules in 15.8.1.2 shall apply.

The frames up to and including frame A in figures 74 to 76 contain information which is to be retained. Frame A shall be the last Data Frame of the group, as identified by the final occurrence of the frame with the corresponding Frame Number. When information is appended, the append starts with Extended Gap Frames at frame B and the information at frame C.

15.8.1 Seamless appending

15.8.1.1 Rules for seamless appending

Rule 1. Exactly 1 frame shall exist between frame A and frame B, i.e. if frame A has an Absolute Frame Number of n, then frame B has an Absolute Frame Number of $n+2$.

Copyright International Organization for Standardization
Provided by IHS under license with ISO
No reproduction or networking permitted without license from IHS
Not for Resale

Rule 2. The frame written between frames A and B shall be contiguous with frame A, i.e. no unrecorded space between A and B is permitted, nor is any discontinuity or repetition of Absolute Frame Number, nor is any physical discontinuity or seam. This frame shall be a Gap Frame. This frame shall not be a frame of an EOP or an EOI Group.

Rule 3. A minimum of 2 frames shall exist between frames B and C, i.e. if frame B has an Absolute Frame Number of n+2, then frame C shall have an Absolute Frame Number of n+5 minimum. No unrecorded space, physical discontinuity or seam or Absolute Frame Number discontinuity or repetition is allowed between frames B and C.

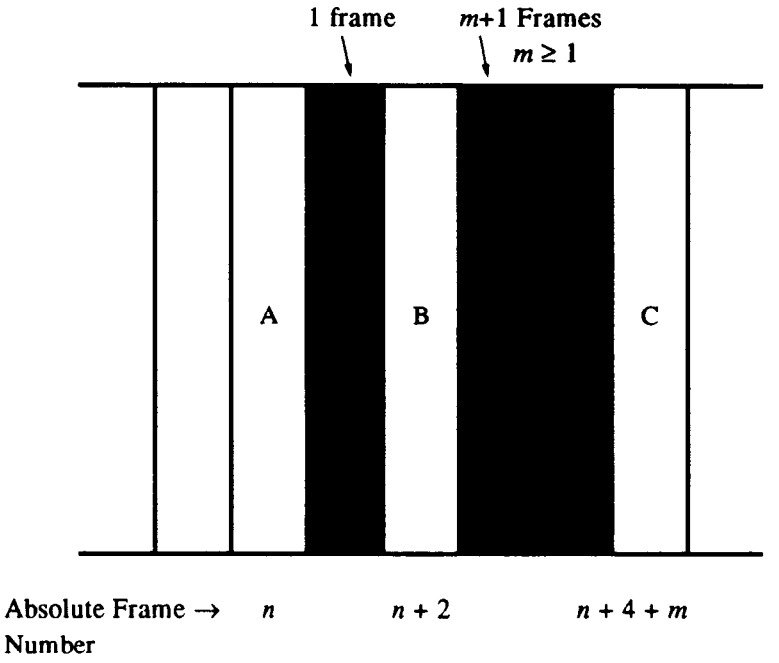

Figure 74 - Seamless appending rules

15.8.1.2 Tolerances for seamless appending

The position of the first track of frame B (AFN = n+2), as measured along the length of the tape at the point shown in figure 74, shall be at a distance of x = 244,5 µm ± 40,0 µm from the first track of the frame with AFN = n+1. This tolerance shall be met for contiguous location under continuous operation as well as for seamless appending.

Copyright International Organization for Standardization
Provided by IHS under license with ISO
No reproduction or networking permitted without license from IHS
Not for Resale

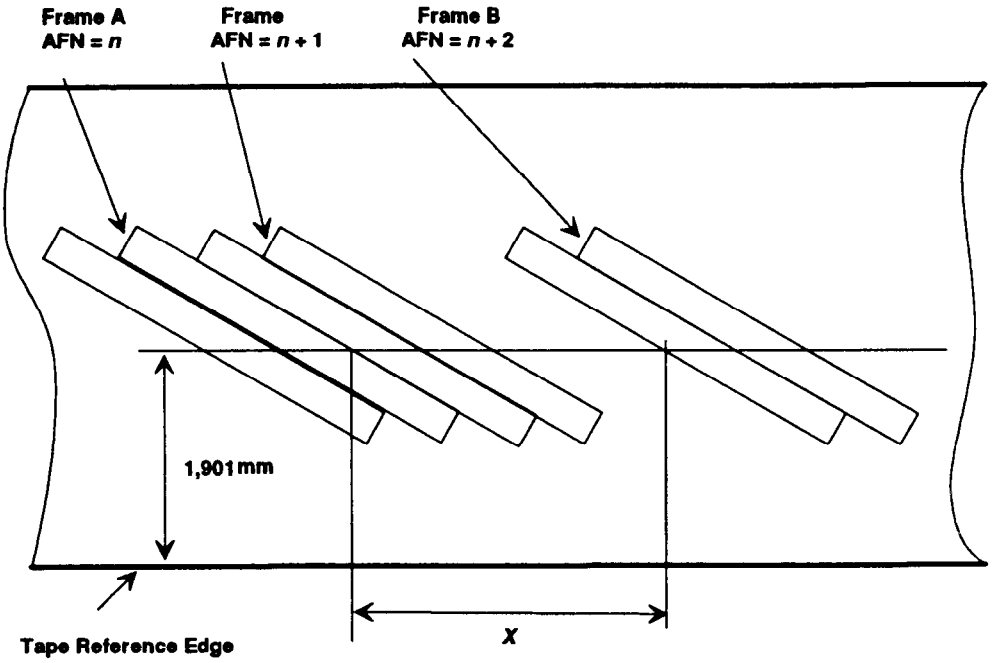

Figure 75 - Tolerance for seamless appending

15.8.2 Non-seamless appending

15.8.2.1 Rules for non-seamless appending

Rule 1. A minimum of 1 and a maximum of 2 frames shall exist between frame A and frame B, i.e. if frame A has an Absolute Frame Number of n, then frame B has an Absolute Frame Number of n+2 minimum and n+3 maximum.

Rule 2. The space between frame A and frame B shall be occupied by a set of frames, i.e. no unrecorded space between frames A and B is permitted. These frames shall not be a frame of an EOP or an EOI Group.

Rule 3. A minimum of 29 frames shall exist between frames B and C, i.e. if frame B has an Absolute Frame Number of n, then frame C shall have an Absolute Frame Number of n+30 minimum. No unrecorded space, physical discontinuity or seam or Absolute Frame Number discontinuity or repetition is allowed between frames B and C.

Copyright International Organization for Standardization
Provided by IHS under license with ISO
No reproduction or networking permitted without license from IHS
Not for Resale

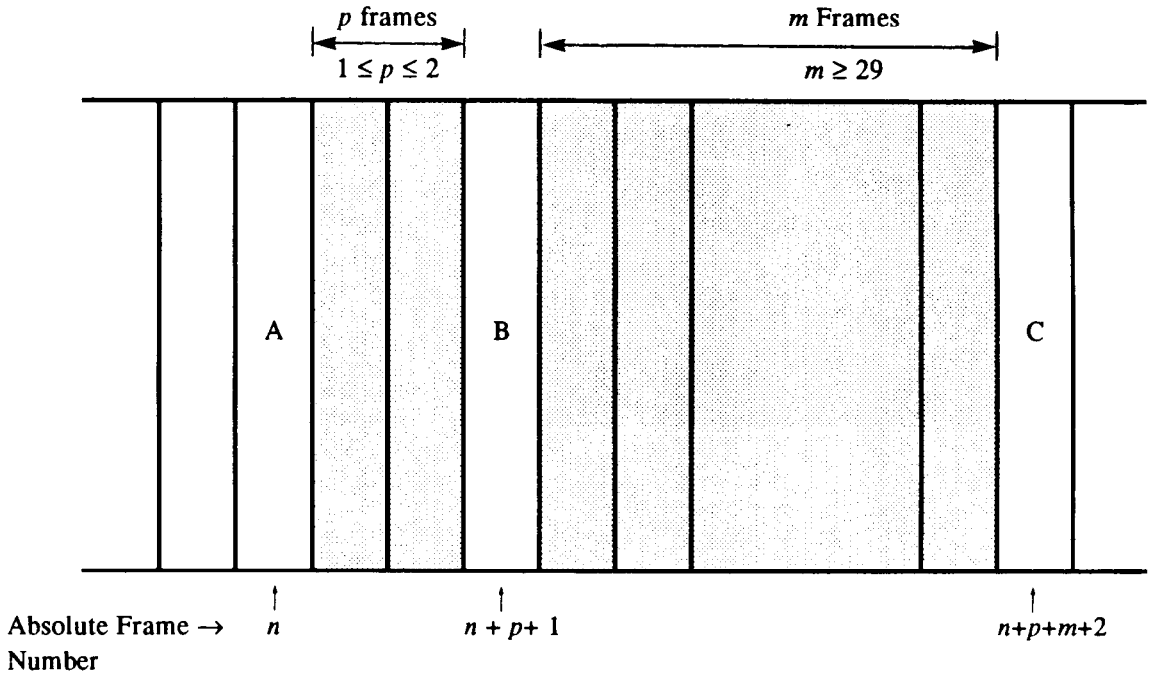

Figure 76 - Non-seamless appending

15.9 Overwrite (figure 77)

The process of overwrite consists in writing a new Main Zone (see 13.1) over the previous Main Zone of a track.

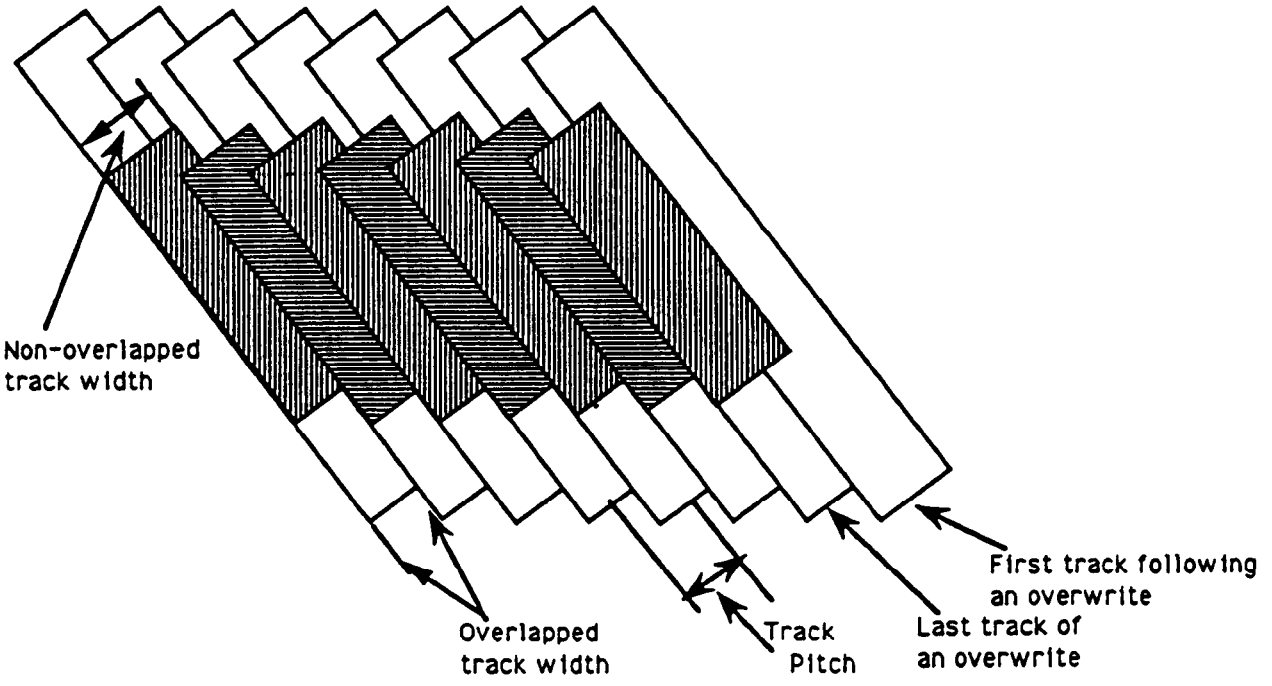

Figure 77 - Track configuration after overwrite

Copyright International Organization for Standardization
Provided by IHS under license with ISO
No reproduction or networking permitted without license from IHS
Not for Resale

15.9.1 Overlapped track width

The track width in portions of the track where the following track overlaps the current track shall be as specified in 11.1.3.

15.9.2 Non-overlapped track width

The track width in portions of the track where the following track does not overlap the current track shall be between 15,81 µm and 22,74 µm.

15.9.3 Rules for overwrite

Rule 1. The overwrite shall start either within the Extended Leading Gap Frame, if present, or within the Leading Gap Frames. The latest point at which the overwrite may start is the negative azimuth track of the Leading Gap Frame with Frame Number -1.

Rule 2. All blocks of the Main Zone of at least 58 consecutive tracks shall be overwritten, whereby no ATF Block shall be erased.

Rule 3. The overwrite shall end with either track of the Trailing Gap Frame or any of the Extended Trailing Gap Frames, if present.

Copyright International Organization for Standardization
Provided by IHS under license with ISO
No reproduction or networking permitted without license from IHS
Not for Resale

Annex A

(normative)

Measurement of the light transmittance of the prisms

A.1 Description

The following description outlines the measuring equipment and measuring method to be used for measuring the light transmittance of the prisms.

Transmittance is the ratio between the reading obtained from the measuring equipment with the cartridge in position and the reading obtained with a reference prism in position.

Transmittance of the cartridge prism:

$$\frac{P_c \text{ (cartridge prism)}}{P_r \text{ (reference prism)}} \times 100\ \%$$

A.2 Radiation source

An infra-red light-emitting diode (LED) with the following parameters shall be used:

wavelength at peak emission: 850 nm ± 50 nm

half-power bandwidth: ± 50 nm

A.3 Radiation receiver

A silicon photo diode shall be used. It shall be operated in the short-circuit mode.

A.4 Optical assembly

The optical assembly for testing the cartridge prisms shall be as shown in figure A.2. All surfaces shall be matt black. Both optical systems shall be calibrated using the reference prism mounted as in figure A.1.

All measurements shall be made in a dark room.

A.5 Reference prism

transmittance : 95 % for a wavelength of 850 nm ± 50 nm

dimensions : see figure A.3.

A.6 Measuring circuitry

As described in D.2.6; switch S to be in position 0.

Copyright International Organization for Standardization
Provided by IHS under license with ISO
No reproduction or networking permitted without license from IHS
Not for Resale

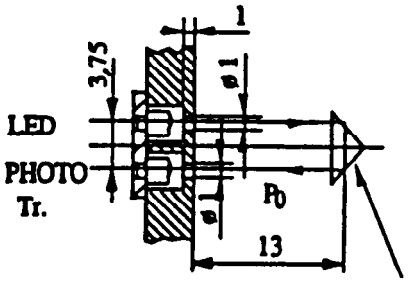

Reference prism

Figure A.1 - Reference prism

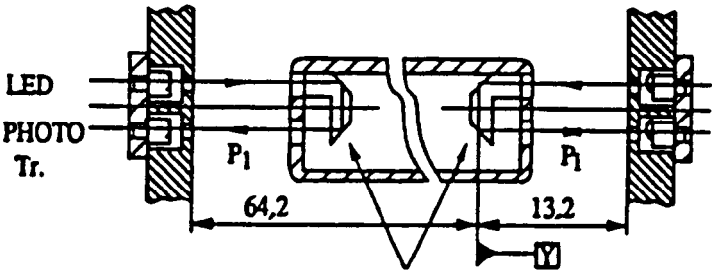

Cartridge prism

Figure A.2 - Cartridge prism

a = 3,75 mm d = 1,00
b = 13,00 mm e = 13,20 mm
c = 64,20 mm f = 1,00 mm

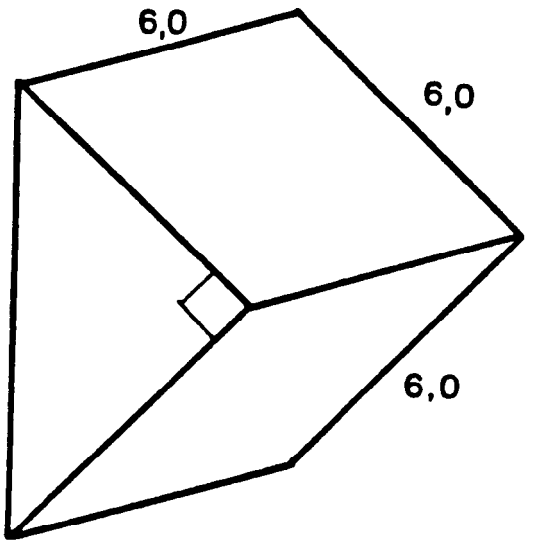

Figure A.3 - Perspective view of the reference prism

Copyright International Organization for Standardization
Provided by IHS under license with ISO
No reproduction or networking permitted without license from IHS
Not for Resale

Annex B

(informative)

Recognition holes

In future applications, the case of the cartridge specified by this International Standard may be loaded with different types of tape.

Table B.1 - Recognition holes

Recognition Hole 1 2 3 4	Tape thickness	Tape coating	Track width	Pre-recorded	Format
0 0 0 0	13 µm	Metal particle	13,6 µm	No	DDS
0 0 0 1	13 µm	Metal particle	13,6 µm	Yes	DDS
0 0 1 0	Cleaning cartridge				
0 0 1 1	13 µm	Barium Ferrite	20,4 µm	Yes	DAT
0 1 0 0	9 µm	Metal particle	13,6 µm	No	DDS
0 1 0 1	9 µm	Metal particle	13,6 µm	Yes	DDS
0 1 1 0	Reserved				
0 1 1 1	9 µm	Barium Ferrite	20,4 µm	Yes	DAT
1 0 0 0	6,9 µm	Enhanced MP	9,1 µm	No	DDS-2
1 0 0 1	Reserved				
1 0 1 0	Reserved				DDS-3
1 0 1 1	Reserved				
1 1 0 0	Reserved				DDS-4
1 1 0 1	Reserved				
1 1 1 0	Reserved				
1 1 1 1	Reserved				

1 = hole open
0 = hole closed

In the rightmost column of table B.1, the terms have the following meanings:

DDS : The Recorded Format is either that of ISO/IEC 10777 (and this International Standard) (i.e. DDS) or of ISO/IEC 11557 (i.e. DDS-DC)
DDS-2 : The Recorded Format will be specified in a future Standard
DDS-3 : A future Recorded Format
DDS-4 : A future Recorded Format
DAT : The Recorded Format is that of IEC 908, ISO/IEC 11321 and ISO/IEC 12248.

Copyright International Organization for Standardization
Provided by IHS under license with ISO
No reproduction or networking permitted without license from IHS
Not for Resale

Annex C

(informative)

Means for opening the lid

C.1 Figure C.1 shows the bottom side of the case. The two square areas defined by dimensions a = 2 mm are the contact areas where the force opening the lid is to be applied.

C.2 Figure C.2 and C.3 show an example of implementation. The drive in which the cartridge is introduced has two pins positioned so that their ends lie below the two areas shown in figure C.1 when the cartridge is inserted. When the cartridge is then pushed downwards (figure C.2) the pins open the lid completely (figure C.3).

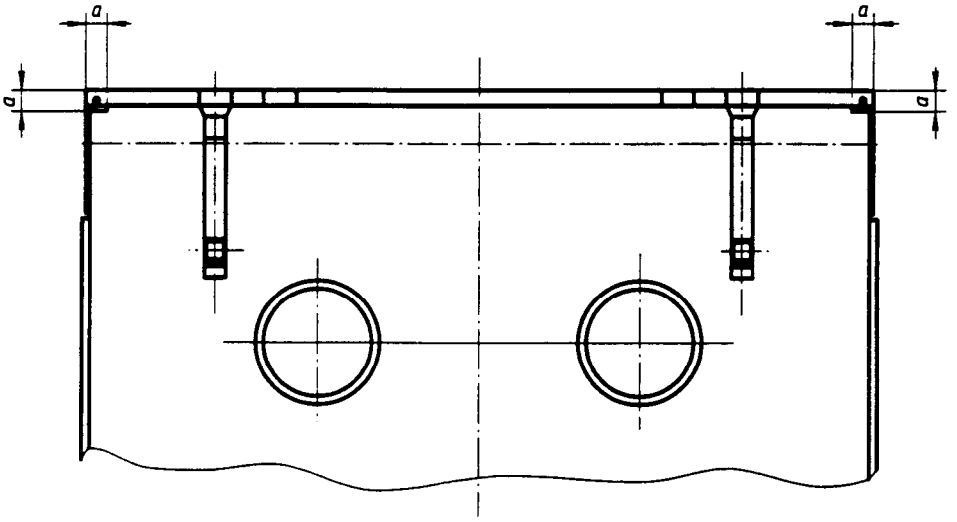

Figure C.1 - Bottom side of the case

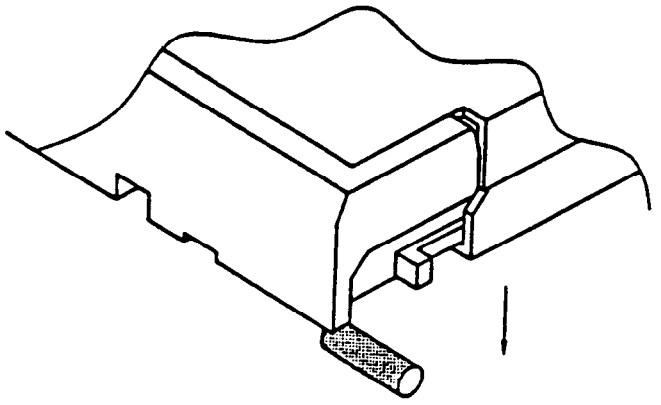

Figure C.2 - Intermediate position within the drive

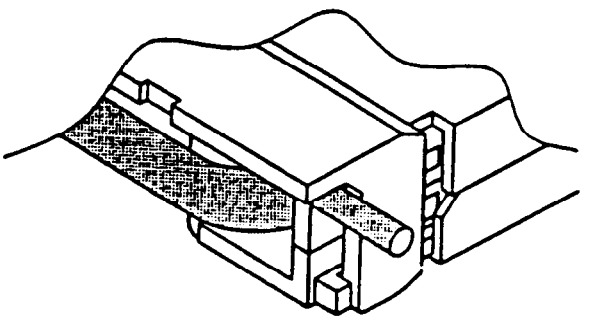

Figure C.3 - Final position within the drive

Copyright International Organization for Standardization
Provided by IHS under license with ISO
No reproduction or networking permitted without license from IHS
Not for Resale

Annex D

(normative)

Measurement of light transmittance of tape and leaders

D.1 Introduction

The following description outlines the general principle of the measuring equipment and measuring method to be applied when measuring the light transmittance of tape.

For the purpose of this International Standard "light transmittance" is defined by convention as the relationship between the reading obtained from the measuring equipment with the test piece inserted and the reading obtained when no test piece is present. The transmittance value is expressed as the percentage ratio o the two readings.

D.2 Description of the measuring equipment

The equipment shall comprise

- the radiation source
- the radiation receiver
- the measuring mask
- the optical path
- the measuring circuitry

D.2.1 Radiation source

An infra-red light-emitting diode (LED) with the following parameters shall be used:

wavelength at peak emission : 850 nm ± 50 nm

half-power bandwidth : ± 50 nm

D.2.2 Radiation receiver

A flat silicon photo diode shall be used. It shall be operated in the short circuit mode.

D.2.3 Measuring mask

The measuring mask shall have a thickness of 2 mm and a circular aperture of diameter d such that the area is 80 % to 100 % of the active area of the photo diode.

The surface of the mask shall be matt black.

The test piece shall be held firmly against the mask to cover the aperture and to ensure that no ambient light leaks past.

D.2.4 Optical path (figure D.1)

The optical path shall be perpendicular to the mask. The distance, L, in millimetres, from the emitting surface of the LED to the mask shall be

$$L = \frac{d}{2 \tan \alpha}$$

Copyright International Organization for Standardization
Provided by IHS under license with ISO
No reproduction or networking permitted without license from IHS
Not for Resale

where α is the angle where the relative intensity of the LED is equal to, or greater than, 95 % of the maximum intensity on the optical axis.

D.2.5 Finish

The whole assembly shall be enclosed in a matt black case.

D.2.6 Measuring circuitry (figure. D.2)

The components of the measuring circuitry are:

E	: regulated power supply with variable output voltage
R	: current-limiting resistor
LED	: light-emitting diode
Di	: silicon photo diode
A	: operational amplifier
R_{f0}, R_{f1}	: feedback resistors
S	: gain switch
V	: voltmeter

The forward current of the LED, and consequently its radiation power, can be varied by means of the power supply E.

Di is operating in the short circuit mode.

The output voltage of the operational amplifier is given by

$V_0 = I_k \times R_f$ where I_k is the short-circuit current of Di.

The output voltage is therefore a linear function of the light intensity.

R_{f0} and R_{f1} shall be low temperature-drift resistors with an accuracy of 1 %. The following ratio applies:

$$\frac{R_{f0}}{R_{f1}} = \frac{1}{20}$$

D.3 Measuring method

D.3.1 Set switch S to position 0.

D.3.2 With no test piece mounted vary the supply voltage E until voltmeter V reads full scale (100 %).

D.3.3 Mount a leader or trailer tape on the mask. The reading of the voltmeter shall be in the range 60 % to 100 %.

D.3.4 Mount a test piece of magnetic tape on the mask. Set switch S to position 1. Full deflection of the voltmeter not represents a light transmittance of 5 %.

Copyright International Organization for Standardization
Provided by IHS under license with ISO
No reproduction or networking permitted without license from IHS
Not for Resale

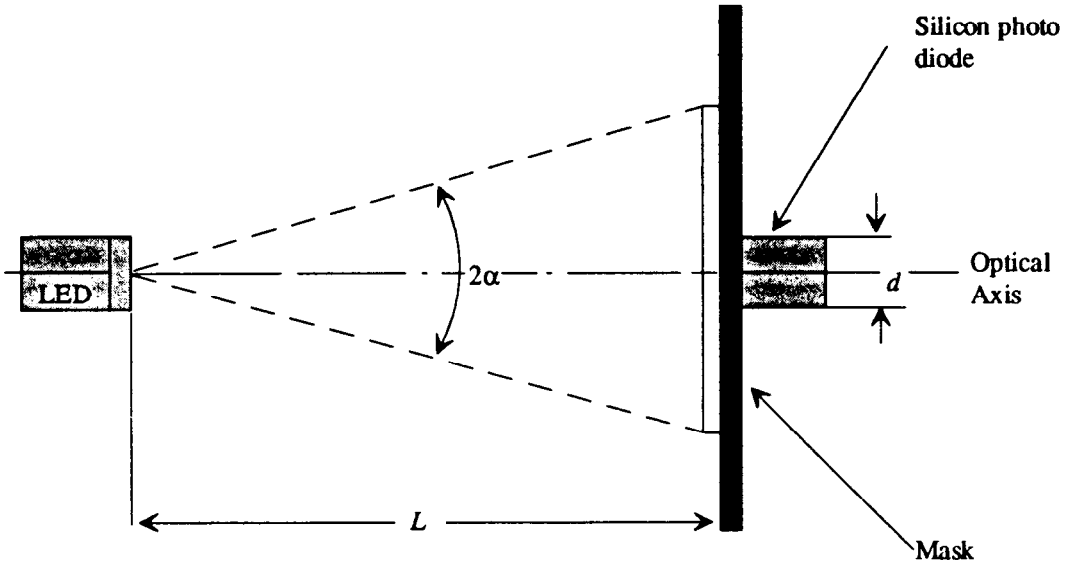

Figure D.1 - Optical arrangement

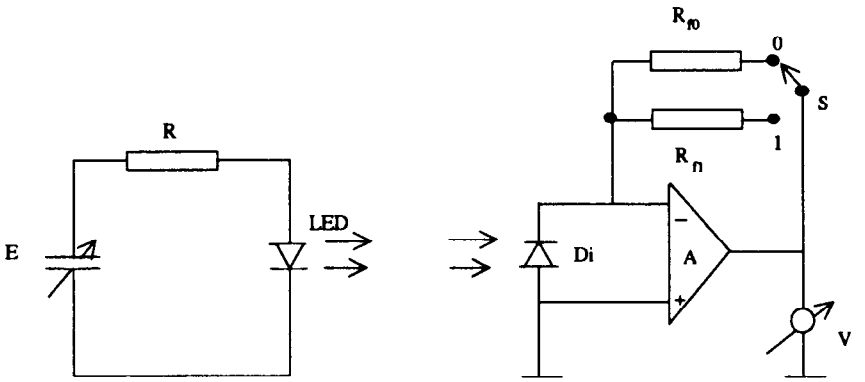

Figure D.2 - Measuring circuitry

Copyright International Organization for Standardization
Provided by IHS under license with ISO
No reproduction or networking permitted without license from IHS
Not for Resale

Annex E

(normative)

Measurement of Signal-to-Noise Ratio

The Signal-to-Noise Ratio shall be measured using a spectrum analyzer with a resolution bandwidth of 10 kHz.

Unless otherwise stated, the test conditions are those defined in clause 7.

E.1 First, a.c. erase the tape to be tested.

E.2 Record the tape at 3 002 ftpmm.

E.3 Measure the Average Signal Amplitude (S_{tape}).

E.4 Measure the total noise level (N_{total}) at 3,7 MHz.

E.5 Measure the read channel noise level (N_{amp}) at 3,7 MHz without a tape loaded but with the motors running.

Tape noise: $N_{tape} = \sqrt{N_{total}^2 - N_{amp}^2}$

$\frac{N_{amp}}{N_{tape}}$ shall be less than 70 %.

The Signal-to-Noise Ratio, in decibels, is 20 log $\frac{S_{tape}}{N_{tape}}$

E.6 Take the average of at least 64 successive tests to determine the Signal-to-Noise Ratio for the tape (S/N_{tape}).

E.7 Repeat E.1 to E.6 for the Secondary Standard Reference Tape, to give the S/N_{MSRT}.

The Signal-to-Noise Ratio characteristic, in decibels, is

$$(S/N_{tape} - S/N_{MSRT})$$

Copyright International Organization for Standardization
Provided by IHS under license with ISO
No reproduction or networking permitted without license from IHS
Not for Resale

Annex F

(normative)

Method for determining the nominal and the maximum allowable recorded levels (pre-recording condition)

The following tests shall be carried out under the conditions defined in Clause 7 of this International Standard.

F.1 Method for determining the nominal recorded level

F.1.1 Read the section of the Secondary Standard Amplitude Calibration Tape that has been recorded at 1 501 ftpmm. Note the read output and apply the appropriate calibration factor.

F.1.2 a.c. erase the Secondary Standard Reference Tape and record at 1 501 ftpmm, increasing the write current from a low value until the output on read equals, after applying the appropriate calibration factor, the value noted in F.1.1.

F.1.3 a.c. erase the interchange tape and record at 1501 ftpmm with the current determined in F.2.1.

F.1.4 Repeat F.1.1 to F.1.3 for the physical recording densities of 83,4 ftpmm, 333,6 ftpmm, 500,4 ftpmm and 1 001 ftpmm.

F.2 Method for determining the maximum allowable recorded level

F.2.1 a.c. erase the Secondary Standard Reference Tape and record at 1 501 ftpmm, increasing the write current until the output on read equals, after applying the appropriate calibration factor, 118,9 % of the value noted in F.1.1.

F.2.2 a.c. erase the interchange tape and record at 1 501 ftpmm with the current determined in F.2.1.

F.2.3 Repeat F.2.1 and F.2.2 for the physical recording densities of 333,6 ftpmm, 500,4 ftpmm and 1 001 ftpmm.

F.3 Limits for the recorded levels

As a history of excessive recording levels can impair the operation of the recording system used in this International Standard it is necessary to prescribe the limits for the recording levels to which the tape has been subjected since the last bulk erasure and for the levels used when recording a tape for interchange. These levels are as follows:

At the physical recording density of 83,4 ftpmm:

- the Nominal Recorded Level.

At the physical recording densities of 333,6 ftpmm, 500,4 ftpmm, 1 001 ftpmm and 1 501 ftpmm:

- the Maximum Allowable Recorded Level.

NOTE - It is recommended that a tape to be used for interchange should not have been previously recorded at levels higher than its Nominal Recorded Levels at the physical recording densities of 333,6 ftpmm, 1 001 ftpmm and 1 501 ftpmm.

Copyright International Organization for Standardization
Provided by IHS under license with ISO
No reproduction or networking permitted without license from IHS
Not for Resale

Annex G

(normative)

Representation of 8-bit bytes by 10-bit pattern

G.1 The 8-bit bytes are represented with the most-significant bit to the left and least significant bit to the right.

The 10-bit patterns are represented with the bit recorded first to the left and the bit recorded last to the right.

G.2 The magnetic recording system chosen requires that the d.c. level of the recorded signals be maintained near zero.

All 10-bit patterns are either balanced to zero or have a d.c. imbalance of 6:4 or 4:6.

Each 10-bit pattern is accompanied by an indicator Q which instructs the translator which of the two alternative patterns should be selected for the next 10-bit pattern in order to maintain the lowest d.c. level.

Q' is the d.c. information of the previous pattern.

Q is the d.c. information of the current pattern.

G.3 The left-hand column indicates the hexadecimal notation of the 8-bit byte for ease of search.

Copyright International Organization for Standardization
Provided by IHS under license with ISO
No reproduction or networking permitted without license from IHS
Not for Resale

		Q' = – 1			Q' = 1		
	8-bit byte	10-Channel bit pattern	DC	Q	10-Channel bit pattern	DC	Q
00	00000000	0101010101	0	1	0101010101	0	– 1
01	00000001	0101010111	0	– 1	0101010111	0	1
02	00000010	0101011101	0	– 1	0101011101	0	1
03	00000011	0101011111	0	1	0101011111	0	– 1
04	00000100	0101001001	0	– 1	0101001001	0	1
05	00000101	0101001011	0	1	0101001011	0	– 1
06	00000110	0101001110	0	1	0101001110	0	– 1
07	00000111	0101011010	0	1	0101011010	0	– 1
08	00001000	0101110101	0	– 1	0101110101	0	1
09	00001001	0101110111	0	1	0101110111	0	– 1
0A	00001010	0101111101	0	1	0101111101	0	– 1
0B	00001011	0101111111	0	– 1	0101111111	0	1
0C	00001100	0101101001	0	1	0101101001	0	– 1
0D	00001101	0101101011	0	– 1	0101101011	0	1
0E	00001110	0101101110	0	– 1	0101101110	0	1
0F	00001111	0101111010	0	– 1	0101111010	0	1
10	00010000	1101010010	0	1	1101010010	0	– 1
11	00010001	0100010010	2	– 1	1100010010	– 2	– 1
12	00010010	0101010010	0	– 1	0101010010	0	1
13	00010011	0101110010	0	1	0101110010	0	– 1
14	00010100	1101110001	2	1	0101110001	– 2	1
15	00010101	1101110011	2	– 1	0101110011	– 2	– 1
16	00010110	1101110110	2	– 1	0101110110	– 2	– 1
17	00010111	1101110010	0	– 1	1101110010	0	1
18	00011000	0101100101	2	– 1	1101100101	– 2	– 1
19	00011001	0101100111	2	1	1101100111	– 2	1
1A	00011010	0101101101	2	1	1101101101	– 2	1
1B	00011011	0101101111	2	– 1	1101101111	– 2	– 1
1C	00011100	0101111001	2	1	1101111001	– 2	1
1D	00011101	0101111011	2	– 1	1101111011	– 2	– 1
1E	00011110	0101111110	2	– 1	1101111110	– 2	– 1
1F	00011111	0101101010	2	– 1	1101101010	– 2	– 1
20	00100000	0111010101	0	– 1	0111010101	0	1
21	00100001	0111010111	0	1	0111010111	0	– 1
22	00100010	0111011101	0	1	0111011101	0	– 1
23	00100011	0111011111	0	– 1	0111011111	0	1
24	00100100	1111010001	2	1	0111010001	– 2	1
25	00100101	1111010011	2	– 1	0111010011	– 2	– 1
26	00100110	1111010110	2	– 1	0111010110	– 2	– 1
27	00100111	0111011010	0	– 1	0111011010	0	1
28	00101000	0111110101	0	1	0111110101	0	– 1
29	00101001	0111110111	0	– 1	0111110111	0	1
2A	00101010	0111111101	0	– 1	0111111101	0	1
2B	00101011	0111111111	0	1	0111111111	0	– 1
2C	00101100	0111101001	0	– 1	0111101001	0	1
2D	00101101	0111101011	0	1	0111101011	0	– 1
2E	00101110	0111101110	0	1	0111101110	0	– 1
2F	00101111	0111111010	0	1	0111111010	0	– 1
30	00110000	0111010010	0	1	0111010010	0	– 1
31	00110001	1110010010	2	– 1	0110010010	– 2	– 1
32	00110010	1111010010	0	– 1	1111010010	0	1
33	00110011	1111110010	0	1	1111110010	0	– 1
34	00110100	0111110001	2	1	1111110001	– 2	1
35	00110101	0111110011	2	– 1	1111110011	– 2	– 1
36	00110110	0111110110	2	– 1	1111110110	– 2	– 1
37	00110111	0111110010	0	– 1	0111110010	0	1

Copyright International Organization for Standardization
Provided by IHS under license with ISO
No reproduction or networking permitted without license from IHS
Not for Resale

		Q' = – 1			Q' = 1		
	8-bit byte	10-Channel bit pattern	DC	Q	10-Channel bit pattern	DC	Q
38	00111000	0111000101	2	– 1	1111000101	– 2	– 1
39	00111001	0111000111	2	1	1111000111	– 2	1
3A	00111010	0111001101	2	1	1111001101	– 2	1
3B	00111011	0111001111	2	– 1	1111001111	– 2	– 1
3C	00111100	0111011001	2	1	1111011001	– 2	1
3D	00111101	0111011011	2	– 1	1111011011	– 2	– 1
3E	00111110	0111011110	2	– 1	1111011110	– 2	– 1
3F	00111111	0111001010	2	– 1	1111001010	– 2	– 1
40	01000000	0100010101	2	1	1100010101	– 2	1
41	01000001	0100010111	2	– 1	1100010111	– 2	– 1
42	01000010	0100011101	2	– 1	1100011101	– 2	– 1
43	01000011	0100011111	2	1	1100011111	– 2	1
44	01000100	0101010001	2	1	1101010001	– 2	1
45	01000101	0101010011	2	– 1	1101010011	– 2	– 1
46	01000110	0101010110	2	– 1	1101010110	– 2	– 1
47	01000111	0100011010	2	1	1100011010	– 2	1
48	01001000	0100110101	2	– 1	1100110101	– 2	– 1
49	01001001	0100110111	2	1	1100110111	– 2	1
4A	01001010	0100111101	2	1	1100111101	– 2	1
4B	01001011	0100111111	2	– 1	1100111111	– 2	– 1
4C	01001100	0100101001	2	1	1100101001	– 2	1
4D	01001101	0100101011	2	– 1	1100101011	– 2	– 1
4E	01001110	0100101110	2	– 1	1100101110	– 2	– 1
4F	01001111	0100111010	2	– 1	1100111010	– 2	– 1
50	01010000	0100100101	0	– 1	0100100101	0	1
51	01010001	0100100111	0	1	0100100111	0	– 1
52	01010010	0100101101	0	1	0100101101	0	– 1
53	01010011	0100101111	0	– 1	0100101111	0	1
54	01010100	0100111001	0	1	0100111001	0	– 1
55	01010101	0100111011	0	– 1	0100111011	0	1
56	01010110	0100111110	0	– 1	0100111110	0	1
57	01010111	0100101010	0	– 1	0100101010	0	1
58	01011000	0110100101	0	1	0110100101	0	– 1
59	01011001	0110100111	0	– 1	0110100111	0	1
5A	01011010	0110101101	0	– 1	0110101101	0	1
5B	01011011	0110101111	0	1	0110101111	0	– 1
5C	01011100	0110111001	0	– 1	0110111001	0	1
5D	01011101	0110111011	0	1	0110111011	0	– 1
5E	01011110	0110111110	0	1	0110111110	0	– 1
5F	01011111	0110101010	0	1	0110101010	0	– 1
60	01100000	0010010101	0	– 1	0010010101	0	1
61	01100001	0010010111	0	1	0010010111	0	– 1
62	01100010	0010011101	0	1	0010011101	0	– 1
63	01100011	0010011111	0	– 1	0010011111	0	1
64	01100100	1010010001	2	1	0010010001	– 2	1
65	01100101	1010010011	2	– 1	0010010011	– 2	– 1
66	01100110	1010010110	2	– 1	0010010110	– 2	– 1
67	01100111	0010011010	0	– 1	0010011010	0	1
68	01101000	0010110101	0	1	0010110101	0	– 1
69	01101001	0010110111	0	– 1	0010110111	0	1
6A	01101010	0010111101	0	– 1	0010111101	0	1
6B	01101011	0010111111	0	1	0010111111	0	– 1
6C	01101100	0010101001	0	– 1	0010101001	0	1
6D	01101101	0010101011	0	1	0010101011	0	– 1
6E	01101110	0010101110	0	1	0010101110	0	– 1
6F	01101111	0010111010	0	1	0010111010	0	– 1

Copyright International Organization for Standardization
Provided by IHS under license with ISO
No reproduction or networking permitted without license from IHS
Not for Resale

		Q' = – 1			Q' = 1		
	8-bit byte	10-Channel bit pattern	DC	Q	10-Channel bit pattern	DC	Q
70	01110000	0010010010	0	1	0010010010	0	– 1
71	01110001	1011010010	2	– 1	0011010010	– 2	– 1
72	01110010	1010010010	0	– 1	1010010010	0	1
73	01110011	1010110010	0	1	1010110010	0	– 1
74	01110100	0010110001	2	1	1010110001	– 2	1
75	01110101	0010110011	2	– 1	1010110011	– 2	– 1
76	01110110	0010110110	2	– 1	1010110110	– 2	– 1
77	01110111	0010110010	0	– 1	0010110010	0	1
78	01111000	0011100101	0	1	0011100101	0	– 1
79	01111001	0011100111	0	– 1	0011100111	0	1
7A	01111010	0011101101	0	– 1	0011101101	0	1
7B	01111011	0011101111	0	1	0011101111	0	– 1
7C	01111100	0011111001	0	– 1	0011111001	0	1
7D	01111101	0011111011	0	1	0011111011	0	– 1
7E	01111110	0011111110	0	1	0011111110	0	– 1
7F	01111111	0011101010	0	1	0011101010	0	– 1
80	10000000	1010010101	0	1	1010010101	0	– 1
81	10000001	1010010111	0	– 1	1010010111	0	1
82	10000010	1010011101	0	– 1	1010011101	0	1
83	10000011	1010011111	0	1	1010011111	0	– 1
84	10000100	1010001001	0	– 1	1010001001	0	1
85	10000101	1010001011	0	1	1010001011	0	– 1
86	10000110	1010001110	0	1	1010001110	0	– 1
87	10000111	1010011010	0	1	1010011010	0	– 1
88	10001000	1010110101	0	– 1	1010110101	0	1
89	10001001	1010110111	0	1	1010110111	0	– 1
8A	10001010	1010111101	0	1	1010111101	0	– 1
8B	10001011	1010111111	0	– 1	1010111111	0	1
8C	10001100	1010101001	0	1	1010101001	0	– 1
8D	10001101	1010101011	0	– 1	1010101011	0	1
8E	10001110	1010101110	0	– 1	1010101110	0	1
8F	10001111	1010111010	0	– 1	1010111010	0	1
90	10010000	1100100101	0	1	1100100101	0	– 1
91	10010001	1100100111	0	– 1	1100100111	0	1
92	10010010	1100101101	0	– 1	1100101101	0	1
93	10010011	1100101111	0	1	1100101111	0	– 1
94	10010100	1100111001	0	– 1	1100111001	0	1
95	10010101	1100111011	0	1	1100111011	0	– 1
96	10010110	1100111110	0	1	1100111110	0	– 1
97	10010111	1100101010	0	1	1100101010	0	– 1
98	10011000	1010100101	2	– 1	0010100101	– 2	– 1
99	10011001	1010100111	2	1	0010100111	– 2	1
9A	10011010	1010101101	2	1	0010101101	– 2	1
9B	10011011	1010101111	2	– 1	0010101111	– 2	– 1
9C	10011100	1010111001	2	1	0010111001	– 2	1
9D	10011101	1010111011	2	– 1	0010111011	– 2	– 1
9E	10011110	1010111110	2	– 1	0010111110	– 2	– 1
9F	10011111	1010101010	2	– 1	0010101010	– 2	– 1
A0	10100000	1011010101	2	1	0011010101	– 2	1
A1	10100001	1011010111	2	– 1	0011010111	– 2	– 1
A2	10100010	1011011101	2	– 1	0011011101	– 2	– 1
A3	10100011	1011011111	2	1	0011011111	– 2	1
A4	10100100	1011001001	2	– 1	0011001001	– 2	– 1
A5	10100101	1011001011	2	1	0011001011	– 2	1
A6	10100110	1011001110	2	1	0011001110	– 2	1
A7	10100111	1011011010	2	1	0011011010	– 2	1

--`,,```,,,,````-`-`,,`,,`,`,,`---

Copyright International Organization for Standardization
Provided by IHS under license with ISO
No reproduction or networking permitted without license from IHS
Not for Resale

	8-bit byte	Q' = – 1 10-Channel bit pattern	DC	Q	Q' = 1 10-Channel bit pattern	DC	Q
A8	10101000	1011110101	2	– 1	0011110101	– 2	– 1
A9	10101001	1011110111	2	1	0011110111	– 2	1
AA	10101010	1011111101	2	1	0011111101	– 2	1
AB	10101011	1011111111	2	– 1	0011111111	– 2	– 1
AC	10101100	1011101001	2	1	0011101001	– 2	1
AD	10101101	1011101011	2	– 1	0011101011	– 2	– 1
AE	10101110	1011101110	2	– 1	0011101110	– 2	– 1
AF	10101111	1011111010	2	– 1	0011111010	– 2	– 1
B0	10110000	1101110101	0	1	1101110101	0	– 1
B1	10110001	1101110111	0	– 1	1101110111	0	1
B2	10110010	1101111101	0	– 1	1101111101	0	1
B3	10110011	1101111111	0	1	1101111111	0	– 1
B4	10110100	1101101001	0	– 1	1101101001	0	1
B5	10110101	1101101011	0	1	1101101011	0	– 1
B6	10110110	1101101110	0	1	1101101110	0	– 1
B7	10110111	1101111010	0	1	1101111010	0	– 1
B8	10111000	1011100101	0	– 1	1011100101	0	1
B9	10111001	1011100111	0	1	1011100111	0	– 1
BA	10111010	1011101101	0	1	1011101101	0	– 1
BB	10111011	1011101111	0	– 1	1011101111	0	1
BC	10111100	1011111001	0	1	1011111001	0	– 1
BD	10111101	1011111011	0	– 1	1011111011	0	1
BE	10111110	1011111110	0	– 1	1011111110	0	1
BF	10111111	1011101010	0	– 1	1011101010	0	1
C0	11000000	1110010101	2	1	0110010101	– 2	1
C1	11000001	1110010111	2	– 1	0110010111	– 2	– 1
C2	11000010	1110011101	2	– 1	0110011101	– 2	– 1
C3	11000011	1110011111	2	1	0110011111	– 2	1
C4	11000100	1110001001	2	– 1	0110001001	– 2	– 1
C5	11000101	1110001011	2	1	0110001011	– 2	1
C6	11000110	1110001110	2	1	0110001110	– 2	1
C7	11000111	1110011010	2	1	0110011010	– 2	1
C8	11001000	1110110101	2	– 1	0110110101	– 2	– 1
C9	11001001	1110110111	2	1	0110110111	– 2	1
CA	11001010	1110111101	2	1	0110111101	– 2	1
CB	11001011	1110111111	2	– 1	0110111111	– 2	– 1
CC	11001100	1110101001	2	1	0110101001	– 2	1
CD	11001101	1110101011	2	– 1	0110101011	– 2	– 1
CE	11001110	1110101110	2	– 1	0110101110	– 2	– 1
CF	11001111	1110111010	2	– 1	0110111010	– 2	– 1
D0	11010000	1101000101	2	– 1	0101000101	– 2	– 1
D1	11010001	1101000111	2	1	0101000111	– 2	1
D2	11010010	1101001101	2	1	0101001101	– 2	1
D3	11010011	1101001111	2	– 1	0101001111	– 2	– 1
D4	11010100	1101011001	2	1	0101011001	– 2	1
D5	11010101	1101011011	2	– 1	0101011011	– 2	– 1
D6	11010110	1101011110	2	– 1	0101011110	– 2	– 1
D7	11010111	1101001010	2	– 1	0101001010	– 2	– 1
D8	11011000	1110100101	0	– 1	1110100101	0	1
D9	11011001	1110100111	0	1	1110100111	0	– 1
DA	11011010	1110101101	0	1	1110101101	0	– 1
DB	11011011	1110101111	0	– 1	1110101111	0	1
DC	11011100	1110111001	0	1	1110111001	0	– 1
DD	11011101	1110111011	0	– 1	1110111011	0	1
DE	11011110	1110111110	0	– 1	1110111110	0	1
DF	11011111	1110101010	0	– 1	1110101010	0	1

Copyright International Organization for Standardization
Provided by IHS under license with ISO
No reproduction or networking permitted without license from IHS
Not for Resale

		Q' = – 1			Q' = 1		
	8-bit byte	10-Channel bit pattern	DC	Q	10-Channel bit pattern	DC	Q
E0	11100000	1111010101	0	1	1111010101	0	– 1
E1	11100001	1111010111	0	– 1	1111010111	0	1
E2	11100010	1111011101	0	– 1	1111011101	0	1
E3	11100011	1111011111	0	1	1111011111	0	– 1
E4	11100100	1111001001	0	– 1	1111001001	0	1
E5	11100101	1111001011	0	1	1111001011	0	– 1
E6	11100110	1111001110	0	1	1111001110	0	– 1
E7	11100111	1111011010	0	1	1111011010	0	– 1
E8	11101000	1111110101	0	– 1	1111110101	0	1
E9	11101001	1111110111	0	1	1111110111	0	– 1
EA	11101010	1111111101	0	1	1111111101	0	– 1
EB	11101011	1111111111	0	– 1	1111111111	0	1
EC	11101100	1111101001	0	1	1111101001	0	– 1
ED	11101101	1111101011	0	– 1	1111101011	0	1
EE	11101110	1111101110	0	– 1	1111101110	0	1
EF	11101111	1111111010	0	– 1	1111111010	0	1
F0	11110000	1101010101	0	– 1	1101010101	0	1
F1	11110001	1101010111	0	1	1101010111	0	– 1
F2	11110010	1101011101	0	1	1101011101	0	– 1
F3	11110011	1101011111	0	– 1	1101011111	0	1
F4	11110100	1101001001	0	1	1101001001	0	– 1
F5	11110101	1101001011	0	– 1	1101001011	0	1
F6	11110110	1101001110	0	– 1	1101001110	0	1
F7	11110111	1101011010	0	– 1	1101011010	0	1
F8	11111000	1111100101	2	– 1	0111100101	– 2	– 1
F9	11111001	1111100111	2	1	0111100111	– 2	1
FA	11111010	1111101101	2	1	0111101101	– 2	1
FB	11111011	1111101111	2	– 1	0111101111	– 2	– 1
FC	11111100	1111111001	2	1	0111111001	– 2	1
FD	11111101	1111111011	2	– 1	0111111011	– 2	– 1
FE	11111110	1111111110	2	– 1	0111111110	– 2	– 1
FF	11111111	1111101010	2	– 1	0111101010	– 2	– 1

Copyright International Organization for Standardization
Provided by IHS under license with ISO
No reproduction or networking permitted without license from IHS
Not for Resale

Annex H

(normative)

Measurement of bit shift

The tape to be measured shall have been written by the tape drive used for data interchange.

The tape shall be written in any mode compatible with system operation.

H.1 Reading equipment

The tape shall be read on any tape transport which supports a track linearity within 6,0 µm when measured according to annex K.

There are no absolute requirements on the output voltage from the head. However, the head design, the rotary transformer, the preamp and the head-to-tape speed should be chosen to avoid problems from low signal-to-noise ratios.

Read header

gap length	: 0,25 µm ± 0,03 µm
track width	: 20 µm ± 2 µm
azimuth	: ± 20°0' ± 12'
angle of the head gap	: The gap in the head of positive azimuth shall make an angle of +20° 0' ± 12' with the axis of the scanner. The gap in the head of the negative azimuth shall make an angle of - 20° 0' ± 12' with the axis of the scanner.

Read channel

The overall frequency response of the head, the rotary transformer and the pre-amplifier, when tested with a wire placed close and parallel to the read gap, shall be within 2 dB in amplitude response and within 5° in phase response, of the transfer function specified below, over the frequency range corresponding to 1/94 of the ONEs frequency to 1,5 times the ONEs frequency.

NOTE - The transfer function is defined with the first-order low frequency cut-off point related to the coupling time-constant at the input to the pre-amplifier, and the second-order high frequency cut-off point related to the inductance and capacitance of the head, rotary transformer and preamplifier.

$$G(S) = \frac{KS^2\omega_c^2}{\omega_a(S+\omega_b)\left(S^2+\frac{\omega_c}{Q}S+\omega_c^2\right)}$$

where

$K = 1$

$\omega_i = 2\pi f_i$

f_a = ONEs frequency

$f_b \leq$ 1/94 of the ONEs frequency

Copyright International Organization for Standardization
Provided by IHS under license with ISO
No reproduction or networking permitted without license from IHS
Not for Resale

f_c = 1,5 times the ONEs frequency
$0{,}7 \leq Q \leq 1{,}0$

Equalizer:

The equalizer connected to the output of the preamp shall have the following characteristic:

$$G(S) = \frac{K\omega_L^4 S\left(S^2 - \omega_P\right)\left(S^2 - \omega_I^2\right)}{\left(S + \omega_H\right)\left(S + \omega_P\right)\left(S^2 + \frac{\omega_I}{Q_0} S + \omega_I^2\right)\left(S^2 + \frac{\omega_L}{Q_1} S + \omega_L^2\right)\left(S^2 + \frac{\omega_L}{Q_2} S + \omega_L^2\right)}$$

where

$K \geq 5$
$\omega_i = 2\pi f_i$
f_H = 1/200 of the ONEs frequency
f_P = 2/3 of the ONEs frequency
f_I = 1/4 of the ONEs frequency
f_L = ONEs frequency
Q_0 = 0,12
Q_1 = 2,0
Q_2 = 0,5

H.2 Measurement

The average bit cell length (L) is obtained from any two reference zero crossings (RZC) located on either side of the test zero crossing (TZC). A reference zero crossing is a ONE zero crossing with at least two adjacent ONE zero crossings on each side. The bits on either side of these ONE zero crossings can be either ZEROs or ONEs.

H.3 Data Analysis

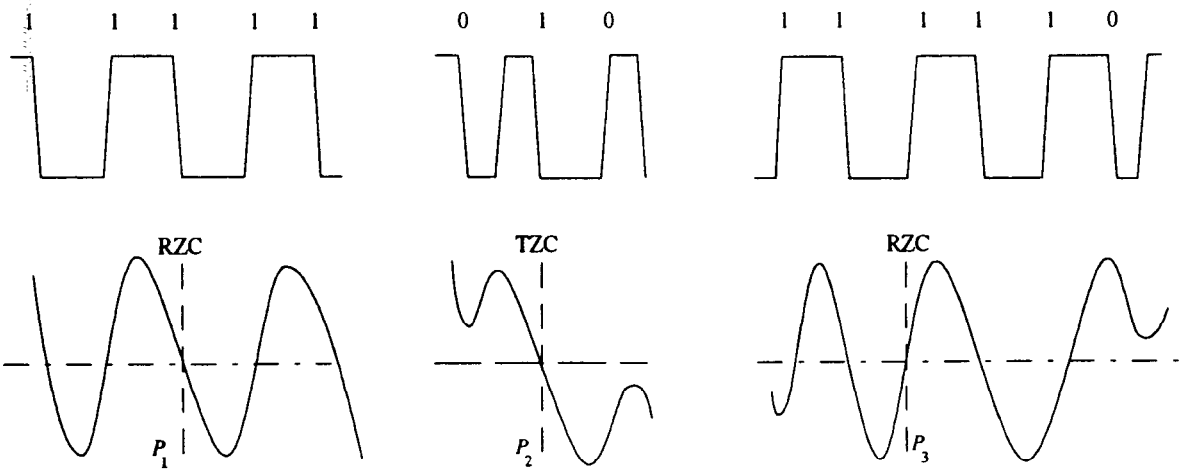

Copyright International Organization for Standardization
Provided by IHS under license with ISO
No reproduction or networking permitted without license from IHS
Not for Resale

If n is the number of bit cells between reference zero crossings, the average bit cell length is

$$L = \frac{P_3 - P_1}{n}$$

where

P_n is the position of the n-th ONE zero crossing.

If there are m bit intervals between the first reference zero crossing and the test zero crossing, then:

$$\text{Bit shift} = \frac{\left| mL - (P_2 - P_1) \right|}{L} \times 100\ \%$$

--`,,```,,,,````-`-`,,`,,`,`,,`---

Copyright International Organization for Standardization
Provided by IHS under license with ISO
No reproduction or networking permitted without license from IHS

Not for Resale

Annex J

(informative)

Recommendations for transportation

J.1 Environment

It is recommended that during transportation the cartridges are kept within the following conditions:

temperature:	-40 °C to 45 °C
relative humidity:	5 % to 80 %
wet bulb temperature:	26 °C max.

There shall be no condensation in or on the cartridge.

J.2 Hazards

Transportation of recorded tape cartridges involves three basic potential hazards.

J.2.1 Impact loads and vibrations

The following recommendations should minimize damage during transportation:

- Avoid mechanical loads that would distort the cartridge shape.
- Avoid dropping the cartridge more than 1 m.
- Cartridges should be fitted into a rigid box containing adequate shock-absorbent material.
- The final box must have a clean interior and a construction that provides sealing to prevent the ingress of dirt and water.
- The orientation of the cartridges inside the final box should be such that their tape-reel axes are horizontal.
- The final box should be clearly marked to indicate its correct orientation.

J.2.2 Extremes of temperature and humidity

Extreme changes in temperature and humidity should be avoided whenever possible. Whenever a cartridge is received it should be conditioned in the operating environment for a period of at least 24 h.

J.2.3 Effects of stray magnetic fields

A nominal spacing of not less than 80 mm should exist between the cartridge and the outer surface of the shipping container. This should minimize the risk of corruption.

Copyright International Organization for Standardization
Provided by IHS under license with ISO
No reproduction or networking permitted without license from IHS
Not for Resale

Annex K

(normative)

Method of measuring track edge linearity

K.1 Procedure

In order to measure the track edge linearity the following procedure shall be followed.

Identify the intersection of the track edge with a line parallel to the Tape Reference Edge and at a distance d = 1,898 mm from it. Place a rectangular box of 8 µm x 20,88 mm centred on this intersection, and with its longitudinal axis at an angle α = 6° 22' 59,5" with the Tape Reference Edge.

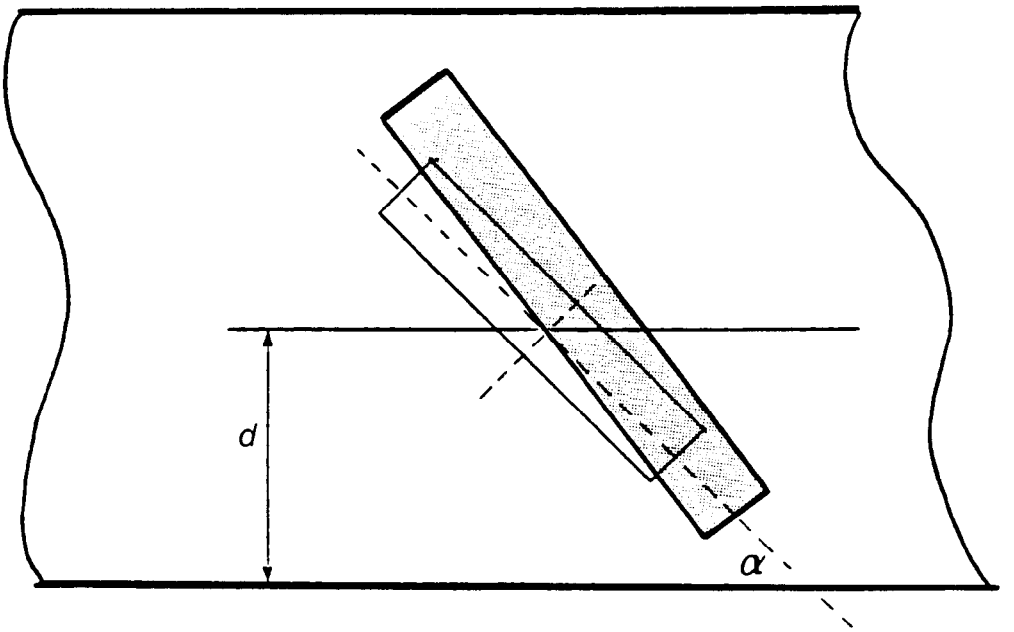

Figure K.1 - Track edge linearity

K.2 Requirement

The track edge shall intersect the short sides of the box only.

Copyright International Organization for Standardization
Provided by IHS under license with ISO
No reproduction or networking permitted without license from IHS
Not for Resale

Annex L

(informative)

Read-After-Write

Read-After-Write (RAW) is a technique which permits a frame to be read immediately after being written, examined to determine if it was written successfully, and rewritten if not. The unit of RAW is a frame. The RAW technique may be applied only to Data Frames of Normal Groups or of Spare Groups. The unit of RAW is a group for Group Format 0 and a frame or a group for Group Format 1.

The primary intent of the RAW technique is the detection of frames containing errors of significant size and/or quantity, i.e. as caused by head clog or non-trivial defects of the tape. Consequently, where RAW is applied it is not necessary that all raw channel data be recovered perfectly to avoid a rewriting operation. Instead, the minimum requirement needs to be only that the quality of the raw channel data and the quantity of correctly demodulated data be such that the entire frame be recoverable with sufficient margin for reliable data interchange.

Actual performance of a frame against this requirement can be assessed in a number of ways, for example by measuring the length, severity, and/or distribution of missing pulses, counting the number of C1 and/or C2 errors, or comparing written and read data on a sampled or full-frame basis. It is beyond the scope of this International Standard to constrain a drive to implement all or any of the above as its RAW check.

Copyright International Organization for Standardization
Provided by IHS under license with ISO
No reproduction or networking permitted without license from IHS
Not for Resale

Annex M

(normative)

Data allocation and C3 parity

M.1 Data allocation for Update-in-Place

A group of data is mapped into rectangular area which is (4 096+148) bytes wide and (32+6) high. And each byte has an Offset Address. The Offset Address is determined as follows.

Offset Address of data bytes: AD

$$AD = 32\left((5760f + 4i + 2a + u) \bmod 4\,244\right) + \text{int}\left(\frac{5\,760f + 4i + 2a + u}{4\,244}\right)$$

Offset Address of C3 parities: AP

$$AP = 32\left(\left(5\,760\,(f-23) + 4i + 2a + u - 3\,328\right) \bmod 4\,244\right)$$

$$+\text{int}\left(\frac{5\,760\,(f-23) + 4i + 2a + u - 3\,328}{4\,244}\right)$$

where

f: Frame address

i: Data word number within a frame 0,1,2,...,1 439

a: If the data is equal to A_{iu} or A_{iL}, then a = 0, else, equal to B_{iu} or B_{iL}, a = 1.

u: If the data is equal to A_{iu} or B_{iu}, then u = 0, else, equal to A_{iL} or B_{iL}, u = 1.

int (x) gives the integer part of x.

x mod y gives the residue of x divided by y.

M.2 Layered error correction and detection code for Update-in-Place

The C3 with 4 096 + 148 byte interleaving is a (38,32) Reed-Solomon code which is completed in one group.

The calculation is defined on GF(2^8) by the following polynomial.

$$G(x) = x^8 + x^4 + x^3 + x^2 + 1$$

and a primitive element of GF(2^8) is defined as follows.

$$\alpha = \begin{matrix}(& 0 & 0 & 0 & 0 & 0 & 0 & 1 & 0 &) \\ & \alpha^7 & \alpha^6 & \alpha^5 & \alpha^4 & \alpha^3 & \alpha^2 & \alpha^1 & \alpha^0 & \end{matrix}$$

and a generator polynomial $G_{R0}(x)$ is defined as follows.

$$G_{R0}(x) = \prod_{i=0}^{i=5} (x - \alpha^i)$$

C3 parity bytes are defined so as to satisfy the following equation.

Copyright International Organization for Standardization
Provided by IHS under license with ISO
No reproduction or networking permitted without license from IHS
Not for Resale

$$H_{R0} \cdot V_{R0} = 0$$

$$H_{R0} = \begin{bmatrix} 1 & 1 & 1 \\ \alpha^{38} & \alpha^{37} & \alpha^{36} \\ \alpha^{76} & \alpha^{74} & \alpha^{72} \\ \alpha^{114} & \alpha^{111} & \alpha^{108} \\ \alpha^{152} & \alpha^{148} & \alpha^{144} \\ \alpha^{190} & \alpha^{185} & \alpha^{180} \end{bmatrix} \quad \begin{bmatrix} 1 & 1 & 1 \\ \alpha^{3} & \alpha^{2} & \alpha^{1} \\ \alpha^{6} & \alpha^{4} & \alpha^{2} \\ \alpha^{9} & \alpha^{6} & \alpha^{3} \\ \alpha^{12} & \alpha^{8} & \alpha^{4} \\ \alpha^{15} & \alpha^{10} & \alpha^{5} \end{bmatrix}$$

$$V_{R0} = \begin{bmatrix} D_j \\ D_{j+1} \\ D_{j+2} \\ D_{j+3} \\ \cdot \\ \cdot \\ \cdot \\ D_{j+31} \\ P_j \\ P_{j+1} \\ P_j + 2 \\ P_j + 3 \\ P_j + 4 \\ P_j + 5 \end{bmatrix}$$

Dn : Data byte of Offset Address AD = n

Pn : C3 parity byte of Offset Address AP = n

j = 0, 32, 64, 96,....,135 776

M.3 Data allocation for sequential mode

Data allocation format is shown in figure 35. A group of data is mapped into rectangular area, which is 4 044 bytes wide and (59+5) high. The System Data in this group format is variable length. Each byte has an Offset Address. The Offset Address is defined as follows.

Offset Address of data bytes: AD

Copyright International Organization for Standardization
Provided by IHS under license with ISO
No reproduction or networking permitted without license from IHS
Not for Resale

$$AD = 59\left((5\,760f + 4i + 2a + u) \bmod 4\,044\right) + \text{int}\left(\frac{5\,760f + 4i + 2a + u}{4\,044}\right)$$

Offset Address of C3 parities: AP

$$AP = 59\left((5\,760\,(f-41) + 4i + 2a + u - 2\,436) \bmod 4\,044\right)$$

$$+\text{int}\left(\frac{5\,760\,(f-23) + 4i + 2a + u - 2\,436}{4\,044}\right)$$

where

f: Frame address

i: Data word number within a frame 0,1,2,...,1 439

a: If the data is equal to A_{iu} or A_{iL}, then a = 0, else, equal to B_{iu} or B_{iL}, a = 1.

u: If the data is equal to A_{iu} or B_{iu}, then u = 0, else, equal to A_{iL} or B_{iL}, u = 1.

int (x) gives the integer part of x.

x mod y gives the residue of x divided by y.

M.4 Layered error correction and detection code for sequential mode

The C3 with 4 044 byte interleaving is a (64,59) Reed-Solomon code which is completed in one group.

The calculation is defined on GF(2^8) by the following polynomial.

$$G(x) = x^8 + x^4 + x^3 + x^2 + 1$$

and a primitive element on GF(2^8) is defined as follows.

$$\alpha = \begin{matrix} (& 0 & 0 & 0 & 0 & 0 & 0 & 1 & 0 &) \\ & \alpha^7 & \alpha^6 & \alpha^5 & \alpha^4 & \alpha^3 & \alpha^2 & \alpha^1 & \alpha^0 & \end{matrix}$$

and a generator polynomial $G_{R1}(x)$ is defined as follows.

$$G_{R1}(x) = \prod_{i=0}^{i=4} (x - \alpha^i)$$

C3 parity symbols are defined so as to satisfy the following equations.

$$H_{R1} \times V_{R1} = 0$$

Copyright International Organization for Standardization
Provided by IHS under license with ISO
No reproduction or networking permitted without license from IHS
Not for Resale

Parity Check matrix H_{R1} and code word example V_{R1} :

$$H_{R1} = \begin{bmatrix} 1 & 1 & 1 & \dots & 1 & 1 & 1 \\ \alpha^{46} & \alpha^{63} & \alpha^{62} & \dots & \alpha^{3} & \alpha^{2} & \alpha^{1} \\ \alpha^{128} & \alpha^{126} & \alpha^{124} & \dots & \alpha^{6} & \alpha^{4} & \alpha^{2} \\ \alpha^{192} & \alpha^{189} & \alpha^{186} & \dots & \alpha^{9} & \alpha^{6} & \alpha^{3} \\ \alpha^{256} & \alpha^{252} & \alpha^{248} & \dots & \alpha^{12} & \alpha^{8} & \alpha^{4} \end{bmatrix}$$

$$V_{R1} = \begin{bmatrix} D_j \\ D_{j+1} \\ D_{j+2} \\ D_{j+3} \\ \vdots \\ D_{j+58} \\ P_j \\ P_{j+1} \\ P_j + 2 \\ P_j + 4 \end{bmatrix}$$

Dn : Data byte of Offset Address AD = n

Pn : C3 parity byte of Offset Address AP = n

j = 0, 59, 118, 177,....., 238 537

Copyright International Organization for Standardization
Provided by IHS under license with ISO
No reproduction or networking permitted without license from IHS
Not for Resale

UDC 681.327.636

Descriptors: data processing, information interchange, data recording, magnetic recording, data storage devices, magnetic tapes, 3,81 mm magnetic tapes, magnetic tape cartridges, specifications, dimensions, physical properties, magnetic properties, track formats.

Price based on 127 pages

Copyright International Organization for Standardization
Provided by IHS under license with ISO
No reproduction or networking permitted without license from IHS

Not for Resale