INTERNATIONAL STANDARD

ISO/IEC 12246

First edition
1993-12-15

Information technology — 8 mm wide magnetic tape cartridge dual azimuth format for information interchange — Helical scan recording

Technologies de l'information — Cartouche de bande magnétique de 8 mm *de large de format double azimut pour l'échange d'information — Enregistrement par balayage en spirale*

Reference number
ISO/IEC 12246:1993(E)

Copyright International Organization for Standardization
Provided by IHS under license with ISO
No reproduction or networking permitted without license from IHS

Not for Resale

Contents

		Page
Section 1 - General		1
1	Scope	1
2	Conformance	1
3	Normative references	1
4	Definitions	1
4.1	a.c. erase	1
4.2	algorithm	1
4.3	Average Signal Amplitude	1
4.4	azimuth	2
4.5	back surface	2
4.6	bit cell	2
4.7	byte	2
4.8	cartridge	2
4.9	compressed data	2
4.10	Cyclic Redundancy Check (CRC) Character	2
4.11	Error Correcting Code (ECC)	2
4.12	flux transition position	2
4.13	flux transition spacing	2
4.14	logical record	2
4.15	magnetic tape	2
4.16	Master Standard Reference Tape	2
4.17	Physical Beginning of Tape (PBOT)	2
4.18	Physical End of Tape (PEOT)	2
4.19	physical recording density	2
4.20	Secondary Reference Amplitude	2
4.21	Secondary Reference Field	2
4.22	Secondary Standard Reference Tape	2

© ISO/IEC 1993
All rights reserved. Unless otherwise specified, no part of this publication may be reproduced or utilized in any form or by any means, electronic or mechanical, including photocopying and microfilm, without permission in writing from the publisher.

ISO/IEC Copyright Office • Case postale 56 • CH-1211 Genève 20 • Switzerland

Printed in Switzerland

Copyright International Organization for Standardization
Provided by IHS under license with ISO
No reproduction or networking permitted without license from IHS
Not for Resale

4.23	Standard Reference Current	2
4.24	Tape Reference Edge	2
4.25	Test Recording Current	2
4.26	track	2
4.27	Typical Field	2
4.28	uncompressed data	2
5	Environment and safety	3
5.1	Testing environment	3
5.2	Operating environment	3
5.3	Storage environment	3
5.4	Transportation	3
5.5	Safety	3
5.6	Flammability	3
Section 2 - Cartridge		4
6	Dimensional and mechanical characteristics of the cartridge	4
6.1	General	4
6.2	Overall dimensions	4
6.3	Holding areas	4
6.4	Cartridge insertion	5
6.5	Window	5
6.6	Loading grips	5
6.7	Label areas	6
6.8	Datum areas and datum holes	6
6.9	Support areas	7
6.10	Recognition holes	7
6.11	Write-inhibit hole	8
6.12	Pre-positioning surfaces	8
6.13	Cartridge lid	9
6.14	Cartridge reel lock	10
6.15	Reel access holes	11
6.16	Interface between the reels and the drive spindles	11
6.17	Light path	12
6.18	Position of the tape in the case	12
6.19	Tape path zone	12
6.20	Tape access cavity	13
6.21	Tape access cavity clearance requirements	13
Section 3 - Requirements for the unrecorded tape		30
7	Mechanical, physical and dimensional characteristics of the tape	30
7.1	Materials	30
7.2	Tape length	30
7.2.1	Magnetic tape	30
7.2.2	Leader and trailer tapes	30
7.2.3	Splicing tape	30

Copyright International Organization for Standardization
Provided by IHS under license with ISO
No reproduction or networking permitted without license from IHS
Not for Resale

7.3 Width 30
7.4 Discontinuities 30
7.5 Thickness 30

7.5.1 Thickness of magnetic tape 30
7.5.2 Thickness of leader and trailer tape 30

7.6 Longitudinal curvature 30
7.7 Cupping 31
7.8 Coating adhesion 31
7.9 Layer-to-layer adhesion 31
7.10 Tensile strength 32

7.10.1 Breaking strength 32
7.10.2 Yield strength 32

7.11 Residual elongation 32
7.12 Electrical resistance of the surface 32
7.13 Tape winding 33
7.14 Light transmittance of tape 33

8 Magnetic recording performance 33

8.1 Test conditions 33
8.2 Typical Field 33
8.3 Signal amplitude 34
8.4 Resolution 34
8.5 Narrow-band signal-to-noise ratio 34

8.5.1 Requirement 34
8.5.2 Procedure 34

8.6 Ease of erasure 34
8.7 Tape quality 34

8.7.1 Missing pulses 34
8.7.2 Missing pulse zone 34

8.8 Inhibitor tape 34

Section 4 - Requirements for an interchanged tape 35

9 Format 35

9.1 General 35
9.2 Information Matrix 35

9.2.1 Loading of the Information Matrix 36

10 Method of recording 41

10.1 Physical recording density 41

Copyright International Organization for Standardization
Provided by IHS under license with ISO
No reproduction or networking permitted without license from IHS Not for Resale

10.1.1 Long-term average bit cell length 41
10.1.2 Short-term average bit cell length 41
10.1.3 Rate of change 41

10.2 Bit shift 41
10.3 Read signal amplitudes 41

10.3.1 Amplitude of data signals 41
10.3.2 Amplitude of servo signals 41

10.4 Erasure 41

11 Track geometry 42

11.1 Track positions 42
11.2 Track pitch 43

11.2.1 Adjacent track pitch 43
11.2.2 Average track pitch 43

11.3 Track width 43
11.4 Track angle 43
11.5 Straightness of track edge 43
11.6 Azimuth 43

12 Format of a track 43

12.1 Channel Bit 43
12.2 Information Segment 43

12.2.1 Bit Synchronization Field 44
12.2.2 Information Segment Number 44
12.2.3 Information Segment field 44

12.3 Information Block 45
12.4 Physical track types 45

12.4.1 T1 and T2 track layouts 46

12.5 Search Field Zones 46

12.5.1 Search Field Data Zones 46
12.5.2 Search Field Zone Sequence of recording 48

12.6 Servo Zone 49

12.6.1 Servo Zone 1 49
12.6.2 Servo Zone 2 49
12.6.3 Servo Zone 3 49

12.7 Information Tracks 49

Copyright International Organization for Standardization
Provided by IHS under license with ISO
No reproduction or networking permitted without license from IHS
Not for Resale

12.7.1 Format Track 49
12.7.2 Data Track 49
12.7.3 Long Tape Mark Track 49
12.7.4 Gap Track 49
12.7.5 End of Data Track 49

13 Tape Mark 50

13.1 Long Tape Mark 50
13.2 Short Tape Mark 50

14 End of Data 50
15 ID Information 50

15.1 Physical Block ID 50
15.2 Logical Block ID 50
15.3 Logical Record ID 50
15.4 Block type 50

15.4.1 Data Block 51
15.4.2 Gap Block 52
15.4.3 Format Block 52
15.4.4 Long/Short Tape Mark Block 53
15.4.5 End of Data Block 53

16 Rewritten Information Blocks 53
17 Physical Tape Format 54

17.1 Initial Erased Area 54
17.2 Logical Beginning of Tape Area (LBOT Area) 54
17.3 Usable area of the tape 54

Annexes

A - Measurement of light transmittance of tape and leaders 55
B - Measurement of bit shift 58
C - Representation of 8-bit bytes by 10-bit patterns 61
D - Recommendations for transportation 64
E - Inhibitor tape 65

Copyright International Organization for Standardization
Provided by IHS under license with ISO
No reproduction or networking permitted without license from IHS
Not for Resale

Foreword

ISO (the International Organization for Standardization) and IEC (the International Electrotechnical Commission) form the specialized system for worldwide standardization. National bodies that are members of ISO or IEC participate in the development of International Standards through technical committees established by the respective organization to deal with particular fields of technical activity. ISO and IEC technical committees collaborate in fields of mutual interest. Other international organizations, governmental and non-governmental, in liaison with ISO and IEC, also take part in the work.

In the field of information technology, ISO and IEC have established a joint technical committee, ISO/IEC JTC 1. Draft International Standards adopted by the joint technical committee are circulated to national bodies for voting. Publication as an International Standard requires approval by at least 75 % of the national bodies casting a vote.

International Standard ISO/IEC 12246 was prepared by the European Computer Manufacturers Association (ECMA) (as Standard ECMA-169) and was adopted, under a special "fast-track procedure", by Joint Technical Committee ISO/IEC JTC 1, *Information technology*, in parallel with its approval by national bodies of ISO and IEC.

Annexes A, B and C form an integral part of this International Standard. Annexes D, E and F are for information only.

Copyright International Organization for Standardization
Provided by IHS under license with ISO
No reproduction or networking permitted without license from IHS
Not for Resale

Introduction

ISO/IEC have produced a series of International Standards for cassettes and cartridges containing magnetic tapes of different width and characteristics.

The first International Standards (e.g. ISO 3407, ISO 4057, ISO 8063, ISO 8462, ISO/IEC 9661, ISO/IEC 11559) dealt with media designed for the digital recording of data for storage and processing in data processing systems. Later, other magnetic media, originally developed for audio and video applications, have been considered for use in data processing applications for storage as well as for information interchange. The recording method known as helical scan recording, together with new types of magnetic tapes, allows to achieve capacities of more than 1 gigabyte of user data. International Standards ISO/IEC 10777, ISO/IEC 11319, ISO/IEC 11321, ISO/IEC 11557, ISO/IEC 12247 and ISO/IEC 12248 deal with such magnetic tape cartridges.

This International Standard is based on ISO/IEC 11319 with extensions and modifications which specify the additional features of the Dual Azimuth format. The specifications of the tape, cartridge, recorded signal, recording method and much of the recorded format are identical with those in ISO/IEC 11319.

It is not intended that this International Standard replace ISO/IEC 11319. Existing drives and cartridges which conform to ISO/IEC 11319 will continue to do so and will not conform to this International Standard. Future drives and tapes which conform to ISO/IEC 11319 may, in addition, conform to this International Standard, but only if they support those features herein which are not in ISO/IEC 11319.

Copyright International Organization for Standardization
Provided by IHS under license with ISO
No reproduction or networking permitted without license from IHS
Not for Resale

Information technology - 8 mm wide magnetic tape cartridge dual azimuth format for information interchange - Helical scan recording

Section 1 - General

1 Scope

This International Standard specifies the physical and magnetic characteristics of an 8 mm wide magnetic tape cartridge to enable interchangeability of such cartridges. It also specifies the quality of the recorded signals, the format and the recording method, thus allowing, together with ISO 1001 for Magnetic Tape Labelling, full data interchange by means of such magnetic tape cartridges. It is based on ISO/IEC 11319, but uses Dual Azimuth Recording to allow the raw capacity to be doubled. The format supports variable length Logical Records, high speed search, and the use of a registered data compression algorithm.

2 Conformance

A magnetic tape cartridge conforms to this International Standard if it satisfies all mandatory requirements specified herein. The tape requirements shall be satisfied throughout the extent of the tape.

3 Normative references

The following standards contain provisions which, through reference in this text, constitute provisions of this International Standard. At the time of publication, the editions indicated were valid. All standards are subject to revision, and parties to agreements based on this International Standard are encouraged to investigate the possibility of applying the most recent editions of the standards listed below. Members of IEC and ISO maintain registers of currently valid International Standards.

ISO/R 527:1966, *Plastics - Determination of tensile properties.*

ISO 1001:1986, *Information processing - File structure and labelling of magnetic tapes for information interchange.*

ISO 1302:1992, *Technical drawings - Method of indicating surface texture.*

ISO/IEC 11319: 1993, *Information technology - 8 mm wide magnetic tape cartridge for information interchange - Helical scan recording.*

ISO/IEC 11576:1993, *Information technology - Procedure for the registration of algorithms for the lossless compression of data.*

IEC 950:1991, *Safety of information technology equipment, including electrical business equipment.*

4 Definitions

For the purposes of this International Standard, the following definitions apply.

4.1 a.c. erase: A process of erasure utilizing alternating magnetic fields of decaying level.

4.2 algorithm: A set of rules for transforming the logical representation of data.

4.3 Average Signal Amplitude: The average peak-to-peak value of the signal output of the read head measured over a minimum of 1,40 mm of track, exclusive of missing pulses.

Copyright International Organization for Standardization
Provided by IHS under license with ISO
No reproduction or networking permitted without license from IHS
Not for Resale

4.4 azimuth: The angular deviation, in degrees of arc, of the recorded flux transitions on a track from the line normal to the track centreline.

4.5 back surface: The surface of the tape opposite to the magnetic coating used to record data.

4.6 bit cell: A distance along the track allocated for the recording of a Channel Bit.

4.7 byte: An ordered set of bits acted upon as a unit.

4.8 cartridge: A case containing magnetic tape stored on twin reels.

4.9 compressed data: The representation of host-transmitted data after transformation by a data compression algorithm.

4.10 Cyclic Redundancy Check (CRC) Character: A character used for error detection.

4.11 Error Correcting Code (ECC): A mathematical procedure yielding bytes used for the detection and correction of errors.

4.12 flux transition position: That point which exhibits the maximum free-space flux density normal to the tape surface.

4.13 flux transition spacing: The distance along a track between successive flux transitions.

4.14 logical record: Related data, from the host, treated as a unit of information.

4.15 magnetic tape: A tape that accepts and retains magnetic signals intended for input, output, and storage of data for information processing.

4.16 Master Standard Reference Tape: A tape selected as the standard for amplitude, Typical Field and Resolution.

NOTE - The Master Standard Reference Tape has been established by the SONY Corporation.

4.17 Physical Beginning of Tape (PBOT): The transition from the tape leader to the opaque area of the splice by which the translucent leader tape is joined to the magnetic tape.

4.18 Physical End of Tape (PEOT): The transition from the opaque area of the splice to the translucent trailer tape.

4.19 physical recording density: The number of recorded flux transitions per unit length of track, expressed in flux transitions per millimetre (ftpmm).

4.20 Secondary Reference Amplitude: The Average Signal Amplitude from the Secondary Standard Reference Tape when it is recorded with the Test Recording Current at 2 236 ftpmm.

4.21 Secondary Reference Field: The Typical Field of the Secondary Standard Reference Tape.

4.22 Secondary Standard Reference Tape: A tape the performance of which is known and stated in relation to that of the Master Standard Reference Tape.

NOTE - Secondary Standard Reference Tapes can be ordered under the Part Number RSE-5001, until the year 2001, from the Sony Corporation, Magnetic Product Group, Data Media Sales Division, 6-7-35 Kitashinagawa, Shinagawa-ku, TOKYO 141, Japan. It is intended that these be used for calibrating Tertiary Reference Tapes for use in routine calibration.

4.23 Standard Reference Current: The current that produces the Secondary Reference Field.

4.24 Tape Reference Edge: The lower edge of the tape when the magnetic coating is facing the observer and the supply reel is to the observer's right.

4.25 Test Recording Current: The current that is 1,5 times the Standard Reference Current.

4.26 track: A diagonally positioned area on the tape along which a series of magnetic transitions may be recorded.

4.27 Typical Field: In the plot of the Average Signal Amplitude against the recording field at the physical recording density of 2 236 ftpmm, the minimum field that causes an Average Signal Amplitude equal to 90 % of the maximum Average Signal Amplitude.

4.28 uncompressed data: Data from the host which is not transformed by a data compression algorithm.

Copyright International Organization for Standardization
Provided by IHS under license with ISO
No reproduction or networking permitted without license from IHS
Not for Resale

5 Environment and safety

The conditions specified below refer to ambient conditions immediately surrounding the cartridge. Cartridges exposed to environments outside these limits may still be able to function usefully; however, such exposure may cause permanent damage.

5.1 Testing environment

Unless otherwise specified, tests and measurements made on the cartridge to check the requirements of this International Standard shall be carried out under the following conditions

temperature:	23 °C ± 2 °C
relative humidity:	40 % to 60 %
conditioning period before testing:	24 h

5.2 Operating environment

Cartridges used for data interchange shall be capable of operating under the following conditions

temperature:	5 °C to 45 °C
relative humidity:	20 % to 80 %
wet bulb temperature:	26 °C max.

There shall be no deposit of moisture on or in the cartridge.

Conditioning before operating:

If a cartridge has been exposed during storage and/or transportation to a condition outside the above values, the cartridge shall be conditioned before use in the operating environment for a time at least equal to the period during which it has been out of the operating environment, up to a maximum of 24 h.

NOTE - Rapid variations of temperature should be avoided.

5.3 Storage environment

For long-term or archival storage of cartridges the following conditions shall be observed

temperature:	5 °C to 32 °C
relative humidity:	20 % to 60 %
wet bulb temperature:	26 °C max.

The stray magnetic field at any point on the tape shall not exceed 4 000 A/m. There shall be no deposit of moisture on or in the cartridge.

5.4 Transportation

Recommended limits for the environment to which a cartridge may be subjected during transportation, and the precautions to be taken to minimize the possibility of damage, are provided in annex D.

5.5 Safety

The cartridge and its components shall satisfy the requirements of IEC 950.

5.6 Flammability

The tape and the case components shall be made from materials which, if ignited from a match flame, do not continue to burn in a still carbon dioxide atmosphere.

Copyright International Organization for Standardization
Provided by IHS under license with ISO
No reproduction or networking permitted without license from IHS
Not for Resale

Section 2 - Cartridge

6 Dimensional and mechanical characteristics of the cartridge

6.1 General

The case of the cartridge shall consist of

- an upper half,
- a lower half,
- a lid pivotally mounted on the upper half.

In the drawings, an embodiment of the cartridge is shown as an example.

Figure 1	is a perspective view of the cartridge seen from the top.
Figure 2	is a perspective view of the cartridge seen from the bottom.
Figure 3	shows the top side with the lid closed using third angle projection.
Figure 4	shows the bottom side, datum and support areas.
Figure 5	shows the bottom side with the lid removed.
Figure 6	shows the enlarged view of the datum and recognition holes.
Figure 7	shows the cross-sections through the light path holes, the recognition holes and the write-inhibit hole.
Figure 8	shows details of the lid when closed, rotating and open.
Figure 9	shows the details of the lid release insertion channel.
Figure 10	shows the lid lock release requirements.
Figure 11	shows the reel lock release requirements.
Figure 12	shows the reel unlock force direction.
Figure 13	shows the lid release force direction.
Figure 14	shows the lid opening force direction.
Figure 15	shows the light path and light window.
Figure 16	shows the internal tape path and light path.
Figure 17	shows the cartridge reel and a cross-section view of the cartridge reel.
Figure 18	shows the cross-section view of the cartridge reel interface with the drive spindle.
Figure 19	shows the tape access cavity clearance requirements.

The dimensions are referred to three orthogonal Reference Planes X, Y and Z.

6.2 Overall dimensions

See figure 3.

The overall dimensions of the case with the lid in the closed position shall be

$l_1 = 62{,}5 \text{ mm} \pm 0{,}3 \text{ mm}$

$l_2 = 95{,}0 \text{ mm} \pm 0{,}2 \text{ mm}$

$l_3 = 15{,}0 \text{ mm} \pm 0{,}2 \text{ mm}$

The distance from the near side to plane X shall be

$l_4 = 47{,}35 \text{ mm} \pm 0{,}15 \text{ mm}$

The distance from the right side to plane Y shall be

$l_5 = 13{,}0 \text{ mm} \pm 0{,}1 \text{ mm}$

6.3 Holding areas

The holding areas shown hatched in figure 3 shall be the areas along which the cartridge shall be held down when inserted in the drive. Their position and dimensions shall be

Copyright International Organization for Standardization
Provided by IHS under license with ISO
No reproduction or networking permitted without license from IHS
Not for Resale

l_6 = 12,0 mm max.

l_7 = 3,0 mm min.

6.4 Cartridge insertion

The cartridge shall have asymmetrical features to prevent insertion in the drive in other than the correct orientation. These consist of a channel, a recess and an incline.

The channel (figures 3 and 9) shall provide for an unobstructed path, when the lid is closed and locked, to unlock the lid and the dimensions shall be

l_8 = 79,7 mm ± 0,2 mm

l_9 = 1,0 mm ± 0,1 mm

l_{10} = 0,7 mm ± 0,1 mm

l_{11} = 1,0 mm min.

l_{12} = 1,2 mm ± 0,1 mm

l_{13} = 0,8 mm ± 0,1 mm

l_{14} = 1,2 mm ± 0,1 mm

l_{15} = 0,5 mm ± 0,1 mm

l_{16} = 1,5 mm ± 0,1 mm

l_{17} = 1,0 mm ± 0,1 mm

l_{18} = 3,8 mm ± 0,1 mm

l_{19} = 0,2 mm ± 0,2 mm

l_{20} = 2,3 mm min.

l_{21} = 2,5 mm ± 0,2 mm

The recess dimensions (figures 3 and 5) shall be

l_{22} = 7,5 mm max.

l_{23} = 11,0 mm ± 0,2 mm

l_{24} = 1,5 mm ± 0,1 mm

l_{25} = 1,5 mm ± 0,1 mm

The incline (figure 8) is part of the lid structure and the dimensions shall be

$l_{26} = 7{,}7\ \text{mm}^{+0,0}_{-2,5}\ \text{mm}$

$l_{27} = 0{,}55\ \text{mm}^{+0,05}_{-0,10}\ \text{mm}$

A_1 = 17,5° ± 4,0°

6.5 Window

See figure 1.

A window may be provided on the top side so that a part of the reels is visible. The window, if provided, shall not extend beyond the height of the cartridge.

6.6 Loading grips

See figure 3.

Copyright International Organization for Standardization
Provided by IHS under license with ISO
No reproduction or networking permitted without license from IHS
Not for Resale

The cartridge shall have loading grips for automatic loading into a drive.

The dimensions and positions of the loading grips shall be

l_{28} = 39,35 mm ± 0,20 mm

l_{29} = 1,5 mm ± 0,1 mm

l_{30} = 5,0 mm ± 0,3 mm

l_{31} = 2,0 mm ± 0,2 mm

A_2 = 90° ± 5°

6.7 Label areas

See figure 3.

A portion of the rear side of the cartridge and a portion of the top side of the cartridge may be used for labels. The rear side area provides for readability of the label when it is stacked or inserted in the drive. The position and the size of the labels shall not interfere with the operation or clearance requirements of the cartridge component parts.

The area used for labels on the top side shall not extend beyond the inner edge of the holding areas defined by l_6 and l_7.

The position and dimensions of the back side label area shall be

l_{32} = 0,5 mm min.

l_{33} = 1,5 mm min.

l_{34} = 80,0 mm max.

The depth of the label depression shall be 0,3 mm max.

6.8 Datum areas and datum holes

See figures 4, 5 and 6.

The annular datum areas A, B and C shall lie in plane Z. They determine the vertical position of the cartridge in the drive. Each shall have a diameter d_1 equal to 6,0 mm ± 0,1 mm and be concentric with the respective datum hole.

The centres of datum holes A and B lie in plane X.

The centre of the circular datum hole A shall be at the intersection of planes X and Y (see figure 5).

The distance from the centre of datum hole B to plane Y (see figure 4) shall be

l_{35} = 68,0 mm ± 0,1 mm

The distance from the centre of the circular datum hole C to plane Y (see figure 6) shall be

l_{36} = 10,20 mm ± 0,05 mm

The distance from the centre of datum hole D to plane Y (see figure 6) shall be

l_{37} = 79,2 mm ± 0,1 mm

The distance from the centres of datum holes C and D to plane X (see figure 5) shall be

l_{38} = 36,35 mm ± 0,08 mm

The diameter of datum hole A and datum hole C shall be $3,00\ \text{mm}^{+\,0,05}_{-\,0,00}$ mm. The dimensions of datum hole A and datum hole C shall be

$l_{39} = 1,2\ \text{mm}^{+\,1,0}_{-\,0,0}$ mm

Copyright International Organization for Standardization
Provided by IHS under license with ISO
No reproduction or networking permitted without license from IHS
Not for Resale

l_{40} = 2,6 mm min.

l_{41} = 1,5 mm min.

l_{42} = 4,0 mm min.

l_{43} = 0,3 mm max.

$A_3 = 45° \pm 1°$

The dimensions of datum hole B and datum hole D shall be

$l_{39} = 1{,}2\ \text{mm}^{+\,1{,}0}_{-\,0{,}0}\ \text{mm}$

l_{40} = 2,6 mm min.

l_{41} = 1,5 mm min.

l_{42} = 4,0 mm min.

l_{43} = 0,3 mm max.

$l_{44} = 3{,}00\ \text{mm}^{+\,0{,}05}_{-\,0{,}00}\ \text{mm}$

l_{45} = 3,5 mm ± 0,1 mm

l_{46} = 3,00 mm ± 0,05 mm

$A_3 = 45° \pm 1°$

r_1 = 1,7 mm min.

6.9 Support areas

The cartridge support areas are shown shaded in figure 4. Support areas A, B and C shall be coplanar with datum areas A, B and C, respectively, within ± 0,1 mm. Support area D shall be coplanar with datum plane Z within ± 0,15 mm.

The areas within l_{49} of the edge of the cartridge shall be recessed from the support areas.

The dimensions and positions of the support areas shall be

l_{35} = 68,0 mm ± 0,1 mm

l_{47} = 10,0 mm ± 0,1 mm

l_{48} = 11,0 mm ± 0,1 mm

l_{49} = 0,5 mm ± 0,1 mm

l_{50} = 7,0 mm ± 0,1 mm

l_{51} = 30,0 mm ± 0,1 mm

l_{52} = 5,5 mm ± 0,1 mm

l_{53} = 64,5 mm ± 0,2 mm

6.10 Recognition holes

See figures 5, 6 and 7.

There shall be 5 recognition holes numbered 1 to 5 as shown in figure 6.

Their positions shall be defined by

l_{54} = 43,35 mm ± 0,15 mm

l_{55} = 3,7 mm ± 0,1 mm

Copyright International Organization for Standardization
Provided by IHS under license with ISO
No reproduction or networking permitted without license from IHS
Not for Resale

l_{56} = 2,3 mm ± 0,1 mm

l_{57} = 6,4 mm ± 0,1 mm

l_{58} = 3,7 mm ± 0,1 mm

l_{59} = 2,3 mm ± 0,1 mm

l_{60} = 6,4 mm ± 0,1 mm

l_{61} = 79,0 mm ± 0,2 mm

All recognition holes shall have the cross-section F-F shown in figure 7 and shall have a diameter of 3,0 mm ± 0,1 mm.

$l_{62} = 1{,}2\ \text{mm}^{+0,3}_{-0,1}\ \text{mm}$

l_{63} = 5,0 mm min.

One of the cross-sections shows a recognition hole closed by a plug, the other shows the plug punched out. These plugs shall withstand an applied force of 0,5 N max. without being punched out.

This International Standard prescribes the following states of these holes.

- Recognition hole 1 shall be close
- Recognition hole 2 shall be closed for tape of 13 µm nominal thickness.
- Recognition hole 2 shall be open for tape of 10 µm nominal thickness.
- Recognition holes 3, 4 and 5 shall be closed.

6.11 Write-inhibit hole

See figures 6 and 7.

The position and dimension of the write-inhibit hole shall be defined by

l_{55} = 3,7 mm ± 0,1 mm

$l_{62} = 1{,}2\ \text{mm}^{+0,3}_{-0,1}\ \text{mm}$

l_{63} = 5,0 mm min.

l_{64} = 10,0 mm ± 0,1 mm

The diameter of the hole shall be 3,0 mm ± 0,1 mm.

When the write-inhibit hole is open, recording on the tape is inhibited. When it is closed, recording is enabled.

The case may have a movable element allowing the write-inhibit hole to be opened or closed. If present, this element shall be such that the state of the write-inhibit hole shall be visible (see figure 3 as an example). The write-inhibit hole closure shall be constructed to withstand a force of 0,5 N. The force required to open or close the write-inhibit hole shall be between 1 N and 15 N.

6.12 Pre-positioning surfaces

See figures 3 and 5.

These surfaces determine the position of the cartridge in the Y direction when inserted into the drive loading slot.

The dimensions of the pre-positioning surfaces shall be

l_{25} = 1,5 mm ± 0,1 mm

$l_{65} = 2{,}4\ \text{mm}^{+0,0}_{-0,1}\ \text{mm}$

Copyright International Organization for Standardization
Provided by IHS under license with ISO
No reproduction or networking permitted without license from IHS
Not for Resale

$l_{66} = 2{,}4\ \text{mm}^{+0,0}_{-0,1}\ \text{mm}$

$l_{67} = 1{,}0\ \text{mm} \pm 0{,}1\ \text{mm}$

$l_{68} = 69{,}0\ \text{mm} \pm 0{,}2\ \text{mm}$

$l_{69} = 14{,}65\ \text{mm} \pm 0{,}10\ \text{mm}$

$l_{70} = 13{,}15\ \text{mm} \pm 0{,}10\ \text{mm}$

$A_4 = 45° \pm 1°$

6.13 Cartridge lid

See figures 3 and 8.

The cartridge shall include a lid for protection of the tape during handling, storage and transportation. The lid consists of two parts, the main part and an auxiliary part.

The main part rotates around axis A (see figure 8) which is fixed relative to the case. The location of axis A shall be defined by l_{27} and

$l_{71} = 7{,}5\ \text{mm} \pm 0{,}1\ \text{mm}$

The auxiliary part rotates around axis B which is fixed relative to the main part of the lid and moves with it. When the lid is in the closed position, the location of axis B shall be defined by

$l_{72} = 7{,}0\ \text{mm} \pm 0{,}1\ \text{mm}$

$l_{73} = 10{,}1\ \text{mm} \pm 0{,}1\ \text{mm}$

The rotation of the auxiliary part is controlled, by a cam at each end, to give the path indicated in figure 8.

When the lid is completely open, neither part shall extend above a plane located l_{77} above and parallel to plane Z.

$l_{74} = 14{,}8\ \text{mm min.}$

$l_{75} = 11{,}5\ \text{mm} \pm 0{,}2\ \text{mm}$

$l_{76} = 1{,}2\ \text{mm} \pm 0{,}1\ \text{mm}$

$l_{77} = 22{,}3\ \text{mm max.}$

$A_5 = 85° \pm 2°$

When the lid is in a partially open position, neither part shall extend above a plane located l_{78} above and parallel to plane Z.

$l_{78} = 22{,}5\ \text{mm max.}$

$r_2 = 14{,}9\ \text{mm max.}$

The main part is shown in figures 3 and 8.

$l_{71} = 7{,}5\ \text{mm} \pm 0{,}1\ \text{mm}$

$l_{79} = 8{,}4\ \text{mm max.}$

$l_{80} = 15{,}2\ \text{mm}^{+0,0}_{-0,5}\ \text{mm}$

$l_{81} = 15{,}3\ \text{mm}^{+0,0}_{-0,3}\ \text{mm}$

$l_{82} = 13{,}15\ \text{mm} \pm 0{,}10\ \text{mm}$

$r_3 = 14{,}7\ \text{mm}^{+0,0}_{-0,3}\ \text{mm}$

Copyright International Organization for Standardization
Provided by IHS under license with ISO
No reproduction or networking permitted without license from IHS
Not for Resale

The design of the locking mechanism is not specified by this International Standard except that it shall be operated by a release pin in the drive. In the lid closed and locked position, access to the lid lock release shall be unobstructed in the hatched area (see figure 10) defined by

l_{83} = 2,0 mm ± 0,1 mm

l_{84} = 6,3 mm ± 0,2 mm

l_{85} = 1,2 mm ± 0,1 mm

A_6 = 45° ± 1°

A_7 = 15° ± 1°

The lid release mechanism shall be actuated when the drive release pin is in the shaded area (see figure 10) defined by

l_{83} = 2,0 mm ± 0,1 mm

l_{86} = 8,2 mm ± 0,2 mm

l_{87} = 0,7 mm ± 0,2 mm

A_8 = 15° ± 1°

The force needed to unlock the lid lock shall not exceed 0,25 N in the direction shown in figure 13.

The force needed to open the lid shall not exceed 1,0 N in the direction shown in figure 14.

6.14 Cartridge reel lock

See figure 11.

The reels shall be locked when the cartridge is removed from the tape drive. The design of the locking mechanism is not specified by this International Standard except that it shall be operated by a release pin in the drive.

The release mechanism shall be accessed through a hole in the case (see figure 5) defined by

l_{88} = 34,5 mm ± 0,1 mm

l_{89} = 35,85 mm ± 0,15 mm

l_{90} = 4,0 mm ± 0,1 mm

l_{91} = 6,5 mm min.

The reels shall be unlocked when the operating face of the release pin is located l_{95} from plane X. In this position there shall be a clearance of l_{96} between the locking mechanism and the inside of the rear wall of the cartridge.

The dimensions of the release mechanism (see figure 11) shall be

$l_{92} = 3{,}2\ \text{mm}\ {}^{+0,3}_{-0,2}\ \text{mm}$

l_{93} = 4,0 mm ± 0,1 mm

$l_{94} = 39{,}0\ \text{mm}\ {}^{+2,0}_{-0,0}\ \text{mm}$

$l_{95} = 41{,}75\ \text{mm}\ {}^{+0,50}_{-0,00}\ \text{mm}$

l_{96} = 0,5 mm min.

l_{97} = 7,8 mm max.

l_{98} = 4,0 mm ± 0,1 mm

A_9 = 60,0° ± 1,0°

Copyright International Organization for Standardization
Provided by IHS under license with ISO
No reproduction or networking permitted without license from IHS
Not for Resale

r_4 = 0,3 mm max.

The force needed to unlock the reel lock in the direction shown in figure 12 shall not exceed 1,0 N.

6.15 Reel access holes

See figure 5.

The case shall have two circular reel access holes which shall allow penetration of the drive spindles.

The dimension and positions of the access holes shall be

l_{99} = 23,00 mm ± 0,05 mm

l_{100} = 11,40 mm ± 0,05 mm

l_{101} = 46,2 mm ± 0,1 mm

d_2 = 18,80 mm ± 0,05 mm

6.16 Interface between the reels and the drive spindles

See figures 17 and 18.

The drive spindles shall engage the reels in the area defined by

l_{102} = 5,4 mm ± 0,1 mm

l_{103} = 4,4 mm ± 0,1 mm

l_{104} = 0,6 mm max.

l_{105} = 2,4 mm ± 0,1 mm

l_{106} = 0,2 mm max.

l_{107} = 2,4 mm ± 0,2 mm

A_{10} = 45° ± 1°

A_{11} = 15° ± 1°

A_{12} = 60° ± 1°

r_5 = 0,2 mm max.

$d_3 = 6{,}50\ \text{mm}^{+0{,}08}_{-0{,}00}\ \text{mm}$

$d_4 = 10{,}00\ \text{mm}^{+0{,}08}_{-0{,}00}\ \text{mm}$

d_5 = 16,0 mm max.

$d_6 = 18{,}0\ \text{mm}^{+0{,}0}_{-0{,}1}\ \text{mm}$

Depth l_{108} of reel driving hole shall be effective to the diameter d_3.

l_{108} = 9,4 mm min.

The reel spring force F shall be 0,6 N ± 0,2 N in the direction shown in figure 18 when the cartridge is mounted in the drive and the support area is l_{110} from datum plane Z.

l_{109} = 7,05 mm ± 0,10 mm

l_{110} = 0,6 mm ± 0,2 mm

l_{111} = 7,5 mm max.

Copyright International Organization for Standardization
Provided by IHS under license with ISO
No reproduction or networking permitted without license from IHS
Not for Resale

l_{112} = 8,0 mm max.

A_{13} = 60° ± 1°

6.17 Light path

See figures 5, 7, 15 and 16.

A light path shall be provided for sensing the leader and trailer tapes. When the lid is open, an unobstructed light path shall exist from the d_7 diameter light path hole to the outside of the cartridge via square holes of side l_{116} (see cross-section D-D in figure 7) and the light window in the cartridge lid.

l_{88} = 34,5 mm ± 0,1 mm

l_{113} = 8,35 mm ± 0,10 mm

l_{114} = 0,5 mm max.

l_{115} = 6,05 mm ± 0,10 mm

l_{116} = 2,5 mm ± 0,4 mm

l_{117} = 12,5 mm min.

l_{118} = 3,8 mm ± 0,1 mm

l_{119} = 2,5 mm ± 0,4 mm

l_{120} = 6,05 mm ± 0,10 mm

A_{14} = 45° ± 1°

A_{15} = 5,50° ± 0,25°

$d_7 = 6{,}5\ \text{mm}^{+0,3}_{-0,0}\ \text{mm}$

6.18 Position of the tape in the case

See figure 16.

The tape shall run between two guide surfaces in a plane parallel to datum plane X and l_{121} from it.

l_{121} = 12,46 mm ± 0,10 mm

The guide surfaces shall have a radius of r_6 and shall be tangential, as shown in figure 16, to lines tangential to the reel hubs that extend to points outside the case. These points shall be defined by

l_{122} = 76,28 mm ± 0,30 mm

l_{123} = 27,15 mm ± 0,20 mm

l_{124} = 31,15 mm ± 0,20 mm

l_{125} = 9,67 mm ± 0,10 mm

r_6 = 1,5 mm min.

6.19 Tape path zone

See figures 16 and 17.

When the cartridge is inserted into the drive, the tape is pulled outside the case by tape guides and is no longer in contact with the guide surfaces. The tape path zone of the case is the zone in which the tape shall be able to move freely. This zone shall be maintained for both sides of the case and shall be defined by

l_{122} = 76,28 mm ± 0,30 mm

Copyright International Organization for Standardization
Provided by IHS under license with ISO
No reproduction or networking permitted without license from IHS
Not for Resale

l_{123} = 27,15 mm ± 0,20 mm

l_{124} = 31,15 mm ± 0,20 mm

l_{125} = 9,67 mm ± 0,10 mm

l_{126} = 23,0 mm ± 0,1 mm

l_{127} = 0,3 mm min.

l_{128} = 46,2 mm ± 0,2 mm

l_{129} = 11,4 mm ± 0,1 mm

l_{130} = 0,3 mm min.

d_8 = 16,05 mm $^{+\,0,00}_{-\,0,10}$ mm

6.20 Tape access cavity

See figure 5.

When the cartridge is inserted into the drive, tape guides in the drive pull out the tape into the drive tape path. The shape and dimensions of the access cavity for these tape guides shall be defined as follows. The two radii r_7 are centred on datum holes A and B.

r_7 = 2,3 mm ± 0,1 mm

The two radii r_8 are centred on the centres of the reel access holes.

r_8 = 24,15 mm ± 0,10 mm

l_{67} = 1,0 mm ± 0,1 mm

l_{68} = 69,0 mm ± 0,2 mm

l_{131} = 3,81 mm ± 0,10 mm

6.21 Tape access cavity clearance requirements

See figure 19.

The case design shall provide clearance for drive tape threading mechanisms and shall be

l_{132} = 1,2 mm max.

l_{133} = 1,15 mm $^{+\,0,20}_{-\,0,00}$ mm

l_{134} = 14,0 mm $^{+\,0,0}_{-\,0,2}$ mm

l_{135} = 66,8 mm min.

l_{136} = 10,0 mm min.

A_{16} = 49° max.

Copyright International Organization for Standardization
Provided by IHS under license with ISO
No reproduction or networking permitted without license from IHS
Not for Resale

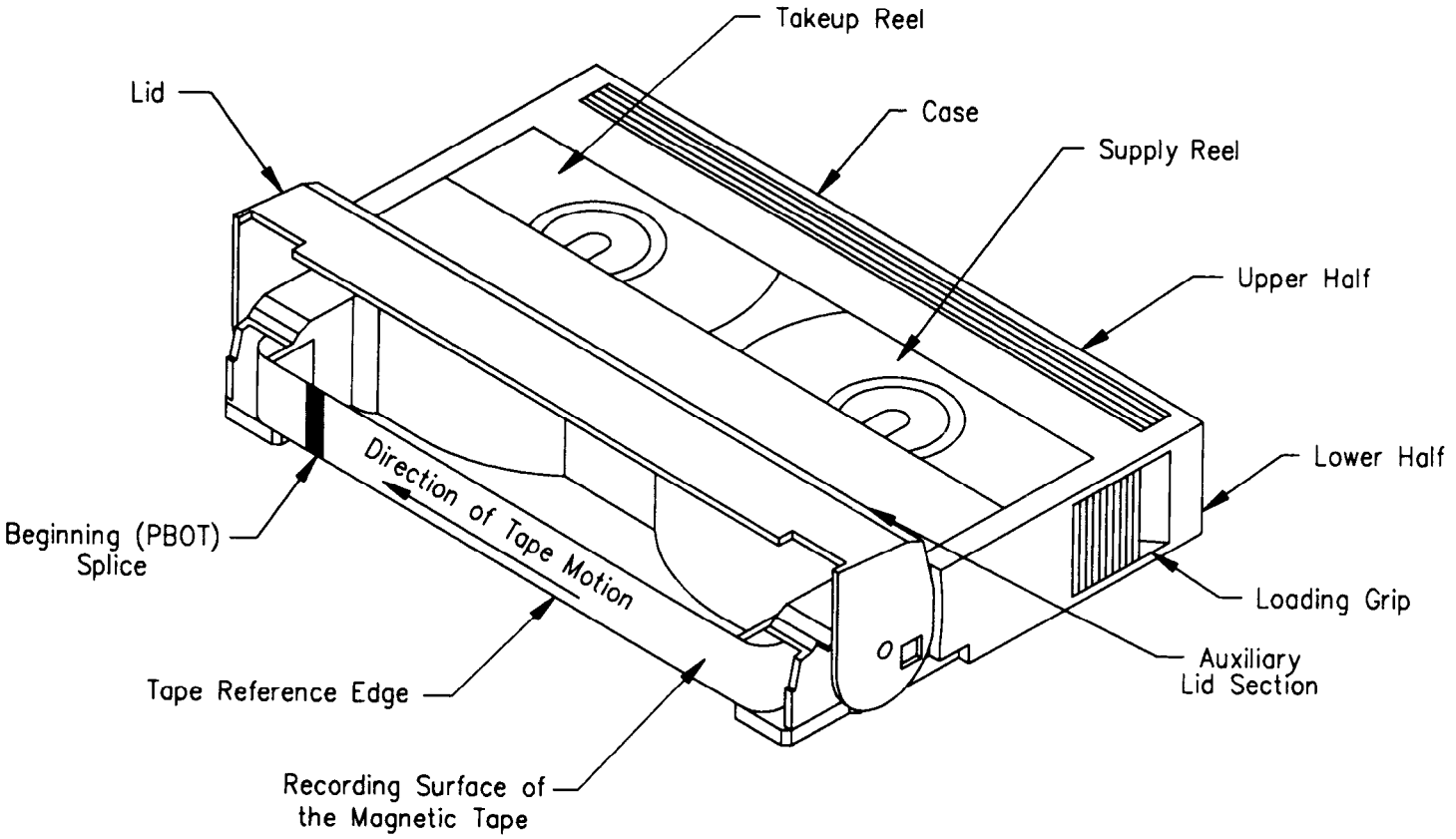

Figure 1 - Tape cartridge assembly top view (lid open)

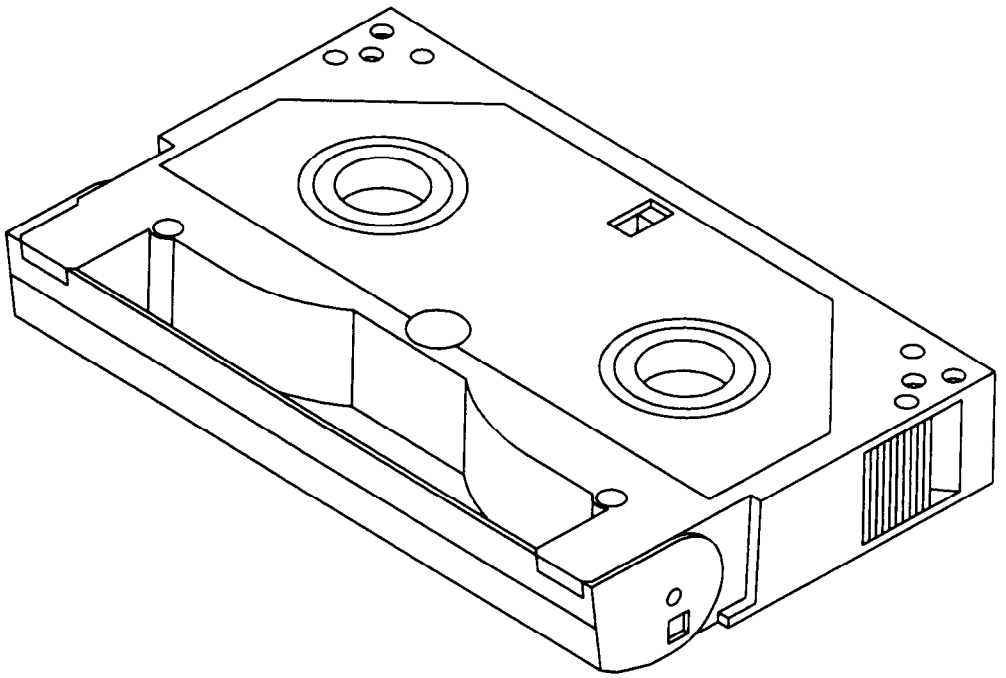

Figure 2 - Tape cartridge assembly bottom view (lid closed)

Copyright International Organization for Standardization
Provided by IHS under license with ISO
No reproduction or networking permitted without license from IHS
Not for Resale

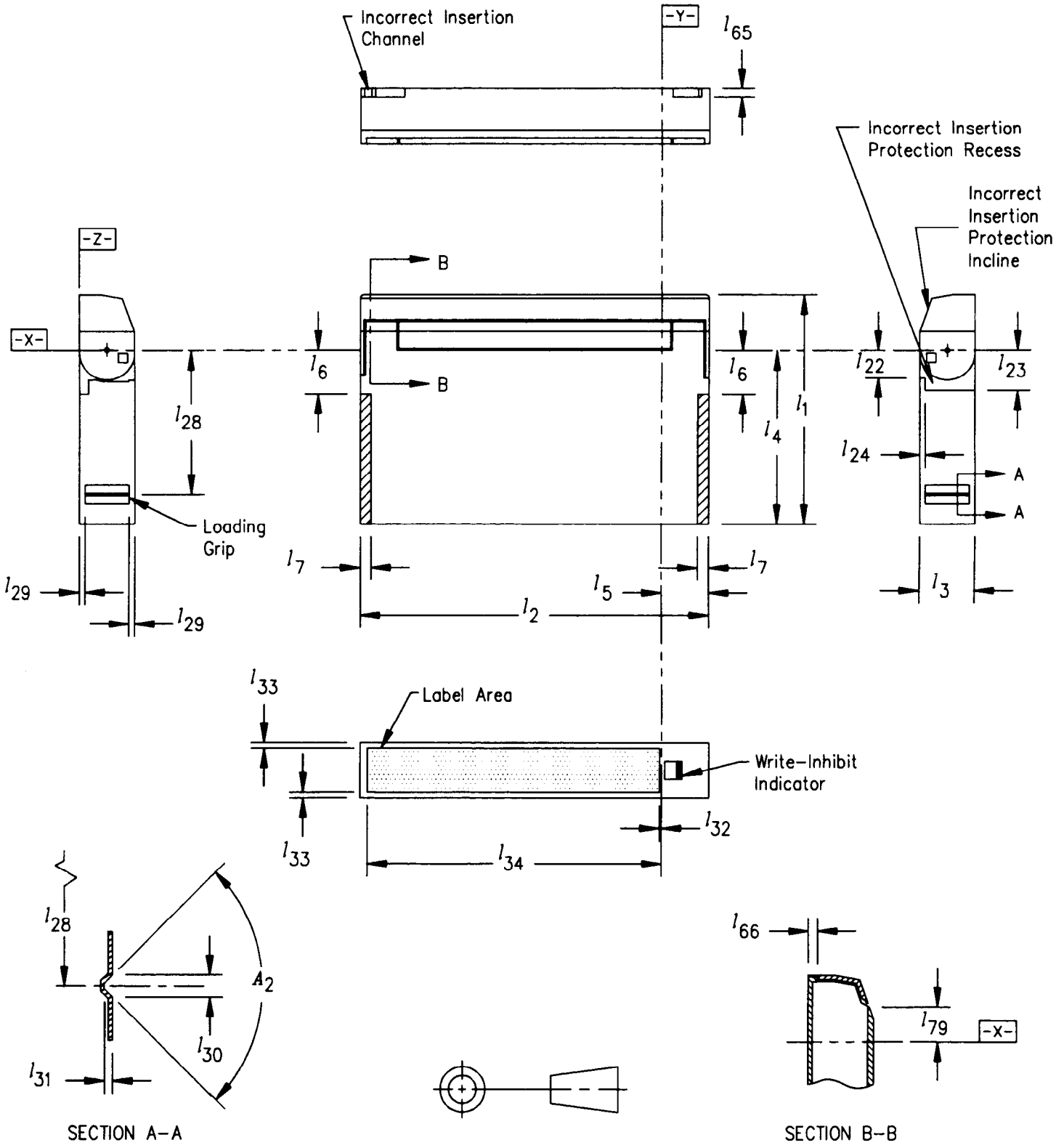

Figure 3 - Top side (lid closed)

Copyright International Organization for Standardization
Provided by IHS under license with ISO
No reproduction or networking permitted without license from IHS
Not for Resale

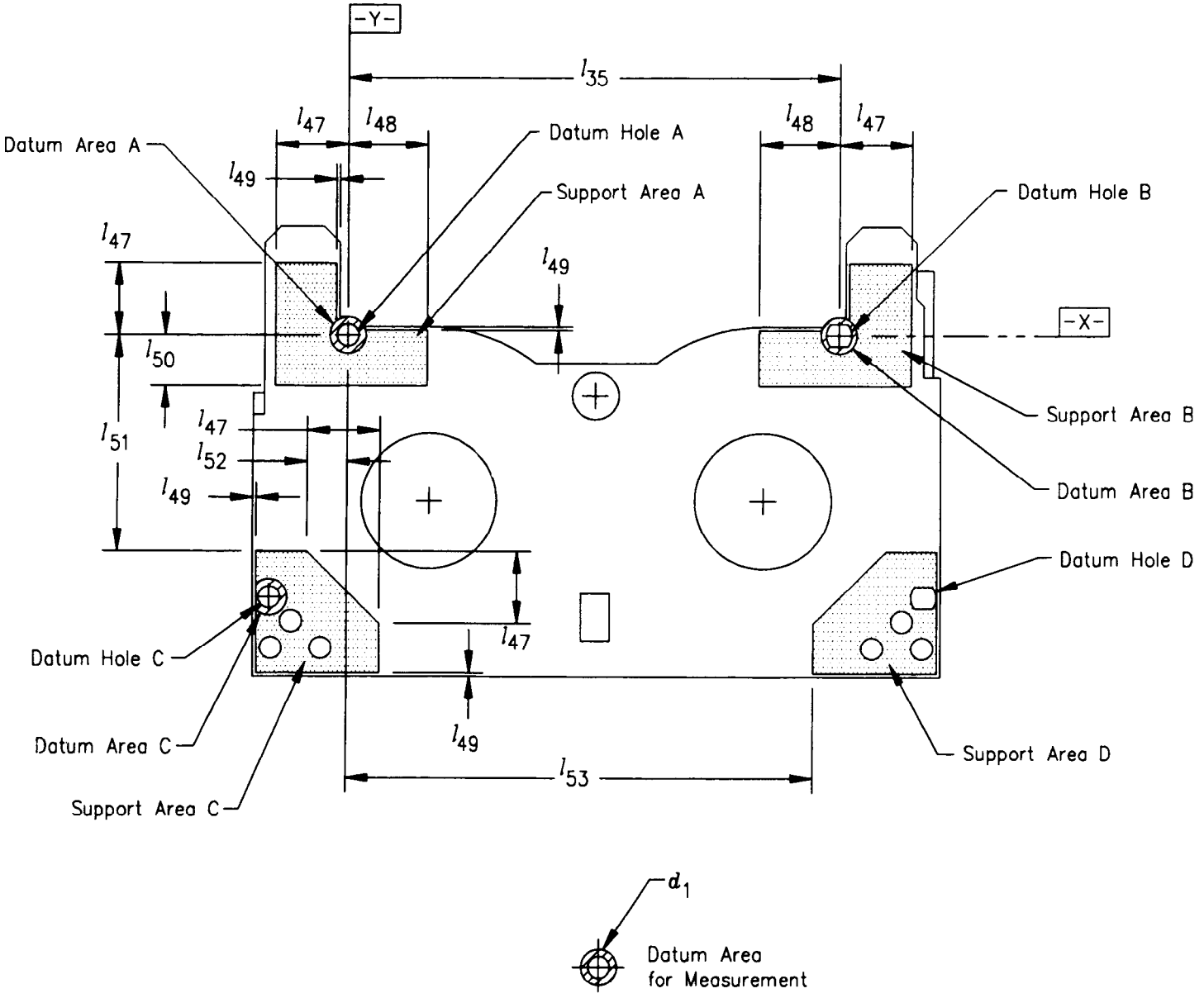

Figure 4 - Bottom side, datum and support areas

Copyright International Organization for Standardization
Provided by IHS under license with ISO
No reproduction or networking permitted without license from IHS
Not for Resale

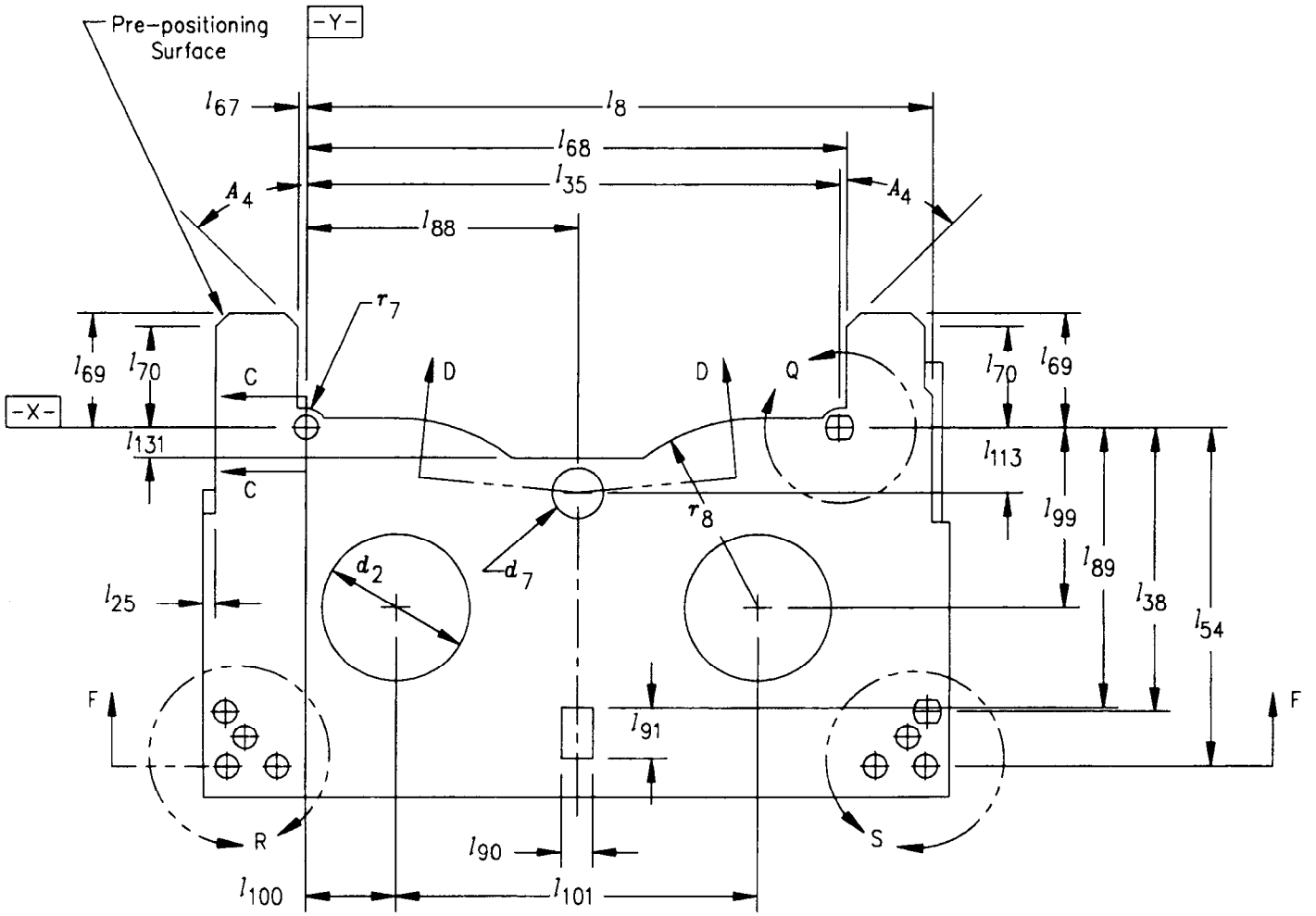

Figure 5 - Bottom side (lid removed)

Copyright International Organization for Standardization
Provided by IHS under license with ISO
No reproduction or networking permitted without license from IHS
Not for Resale

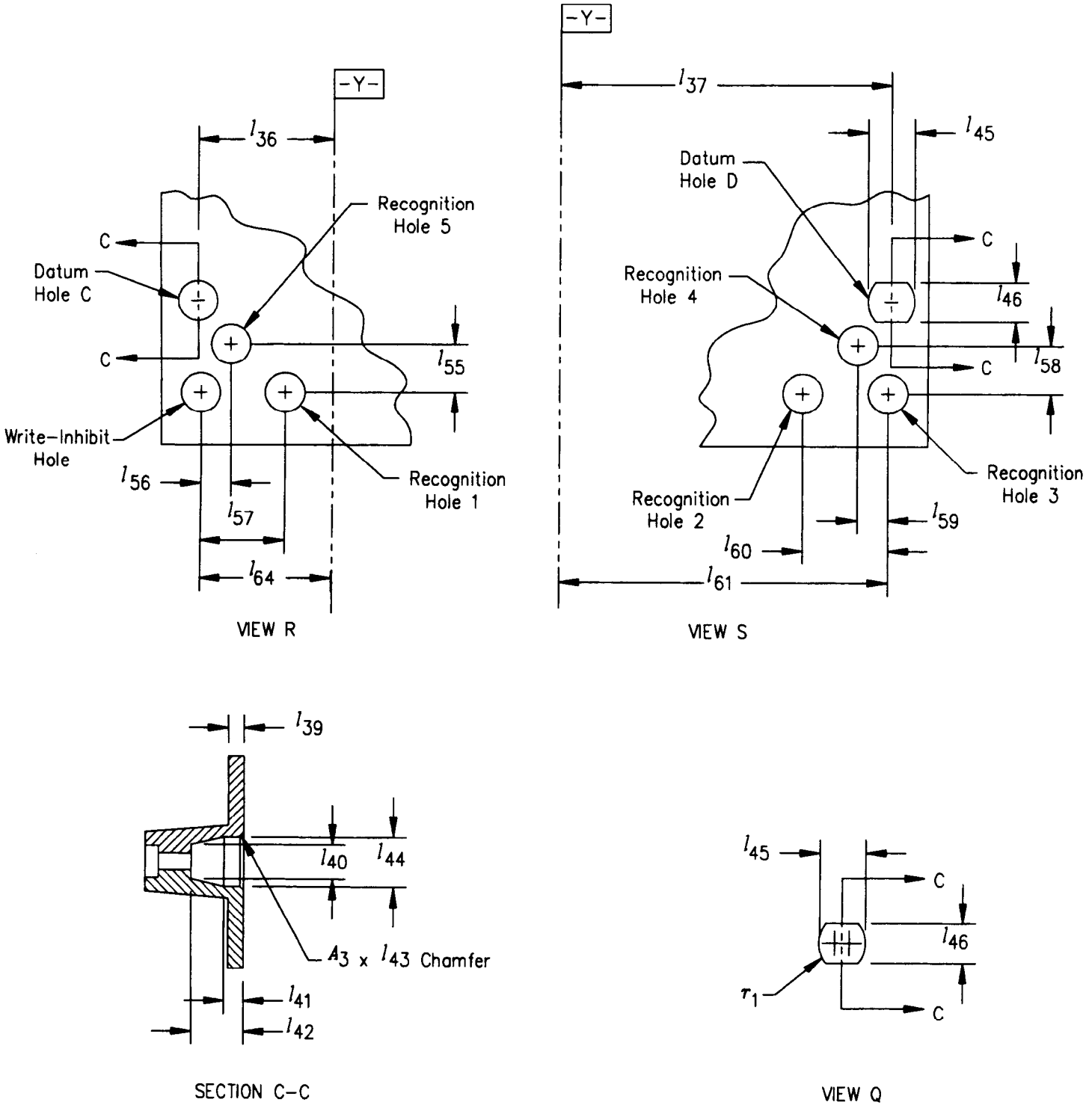

Figure 6 - Details of datum and recognition holes

Copyright International Organization for Standardization
Provided by IHS under license with ISO
No reproduction or networking permitted without license from IHS
Not for Resale

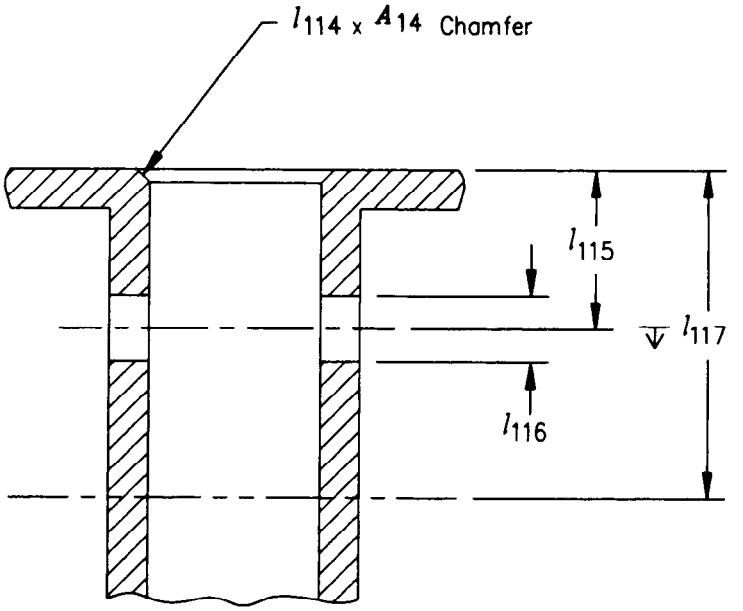

SECTION D–D

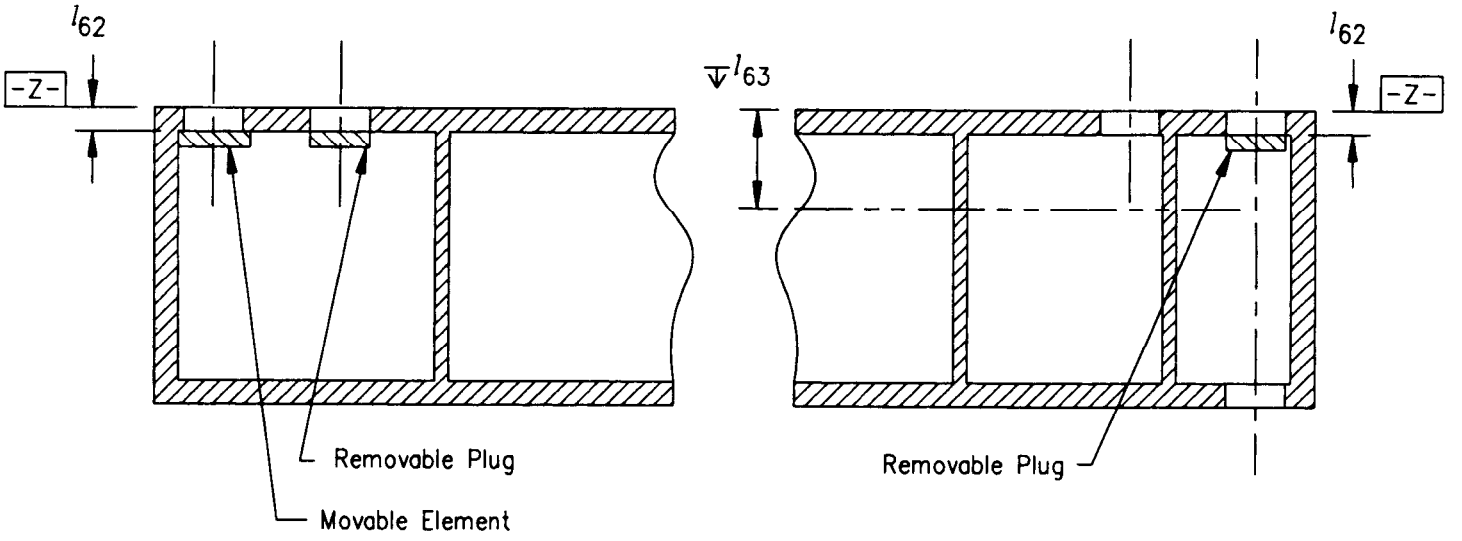

SECTION F–F

Figure 7 - Cross-sections of light path holes, recognition holes and write-inhibit hole

Copyright International Organization for Standardization
Provided by IHS under license with ISO
No reproduction or networking permitted without license from IHS
Not for Resale

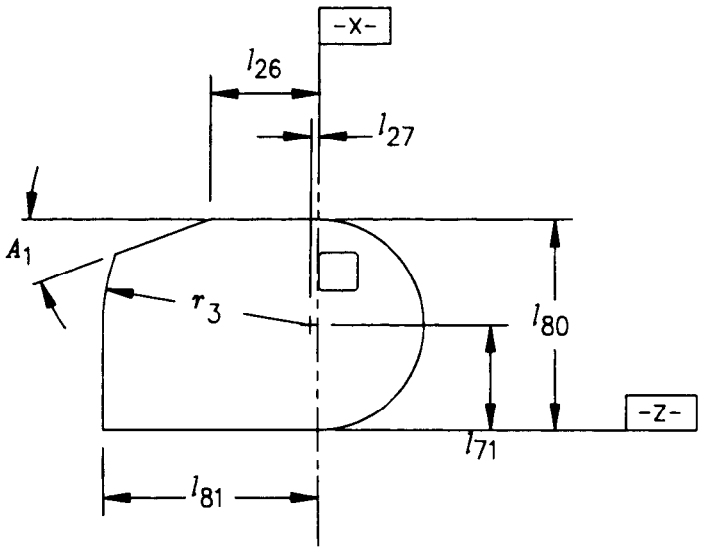

Details of the Side of the Lid

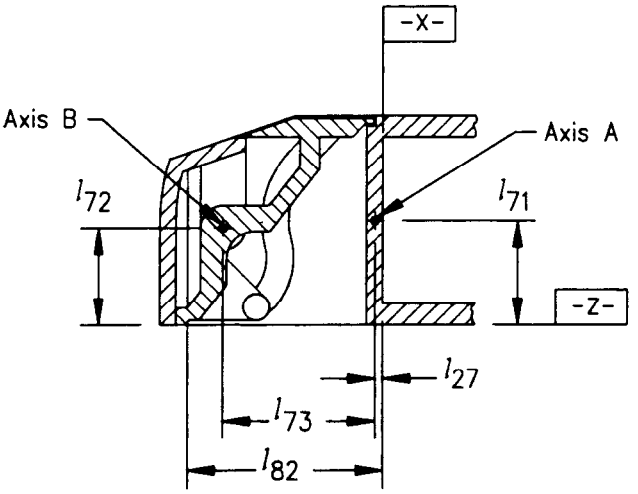

Internal Lid Structure

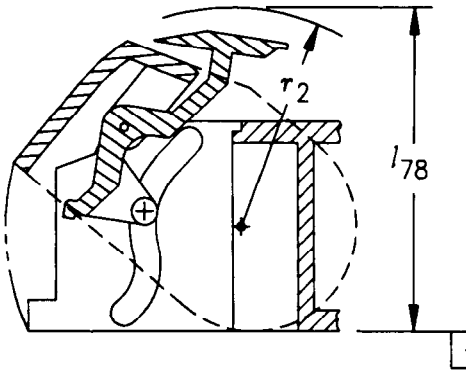

Lid Configuration When Rotating

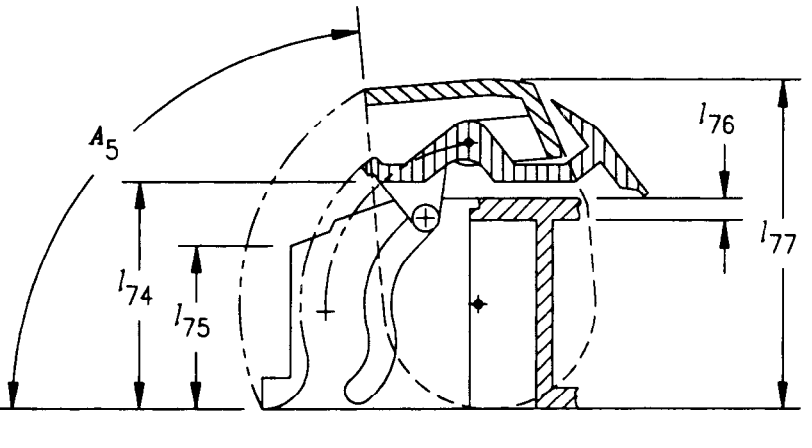

Lid Configuration When the Lid is Open

Figure 8 - Lid

Copyright International Organization for Standardization
Provided by IHS under license with ISO
No reproduction or networking permitted without license from IHS
Not for Resale

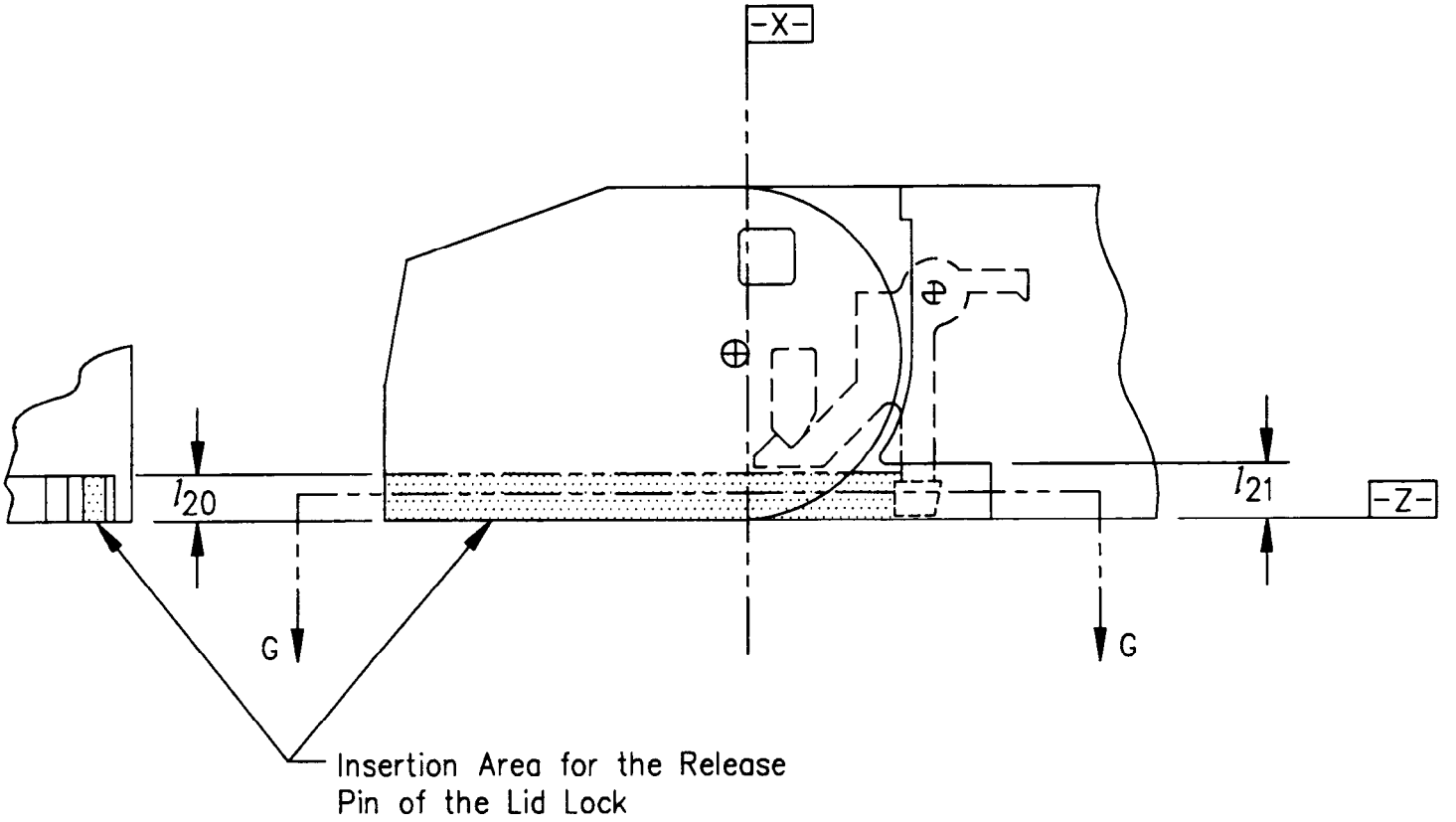

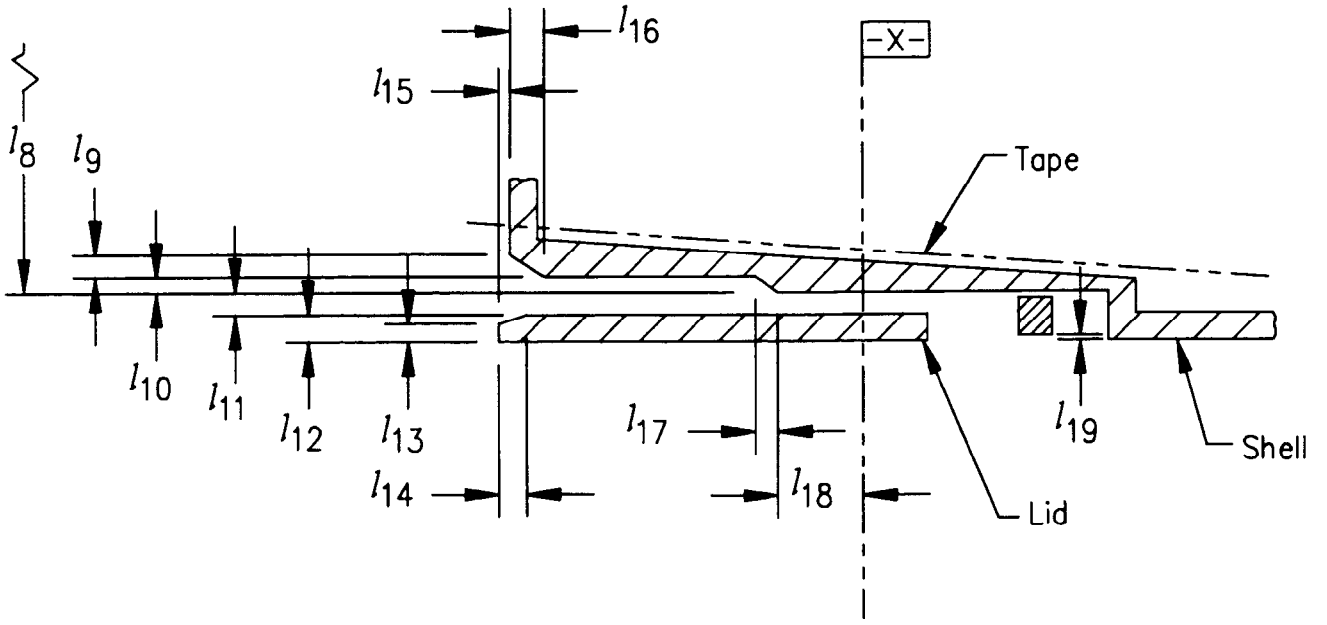

SECTION G–G

Figure 9 - Lid release insertion channel

Copyright International Organization for Standardization
Provided by IHS under license with ISO
No reproduction or networking permitted without license from IHS
Not for Resale

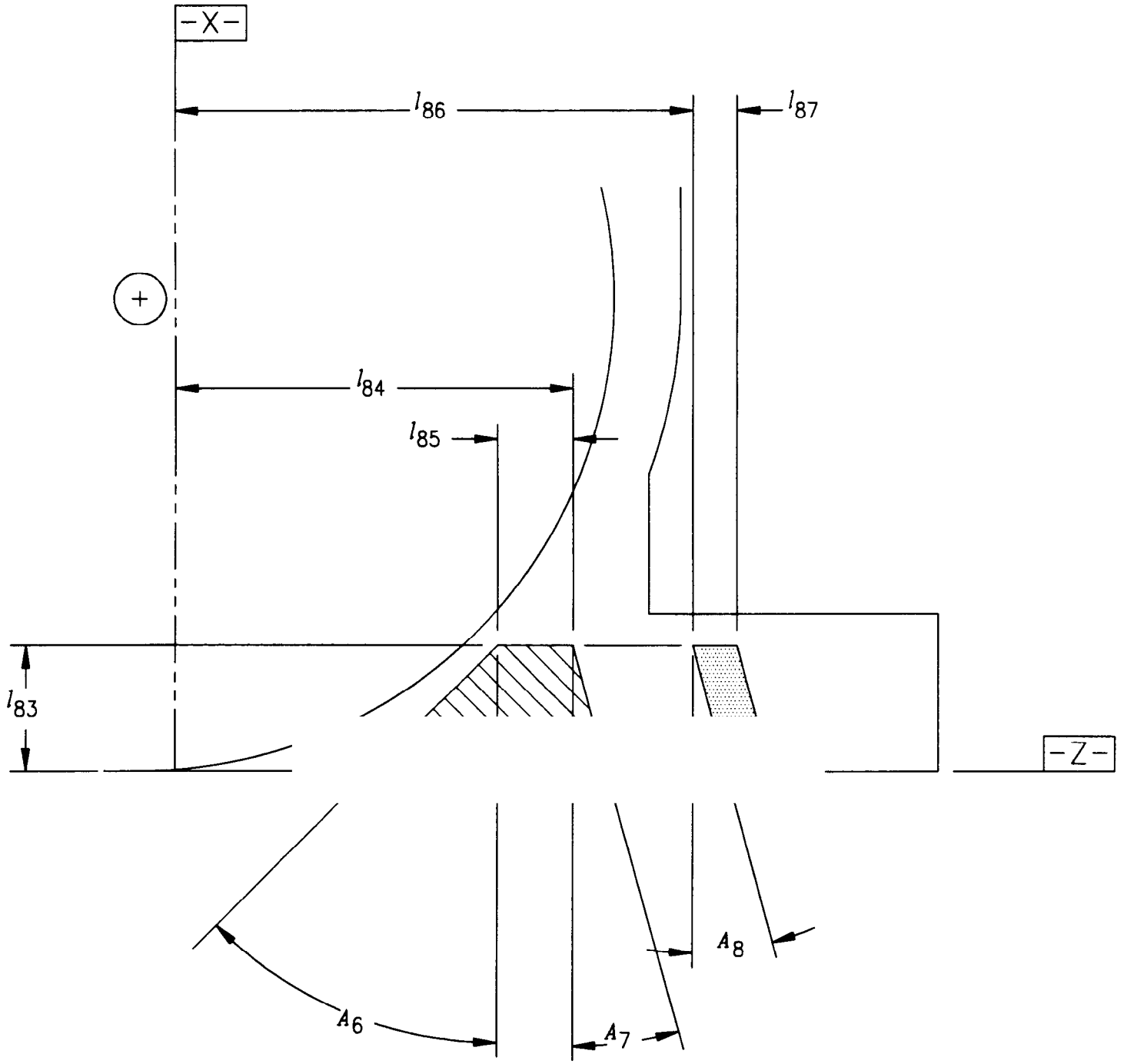

Figure 10 - Lid release requirement

--`,,```,,,,````-`-`,,`,,`,`,,`---

Copyright International Organization for Standardization
Provided by IHS under license with ISO
No reproduction or networking permitted without license from IHS

Not for Resale

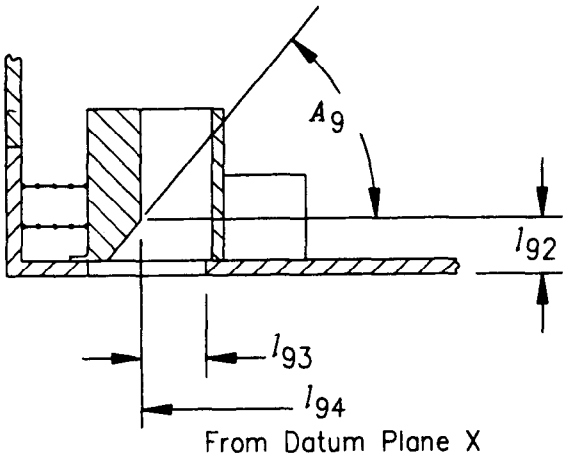

Reel Lock in Locked Position

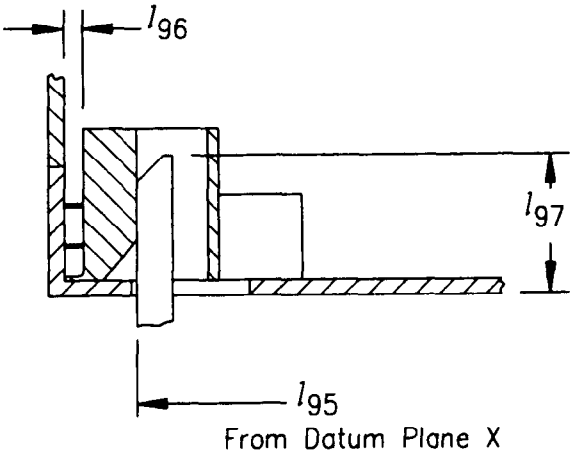

Reel Lock In Released Position

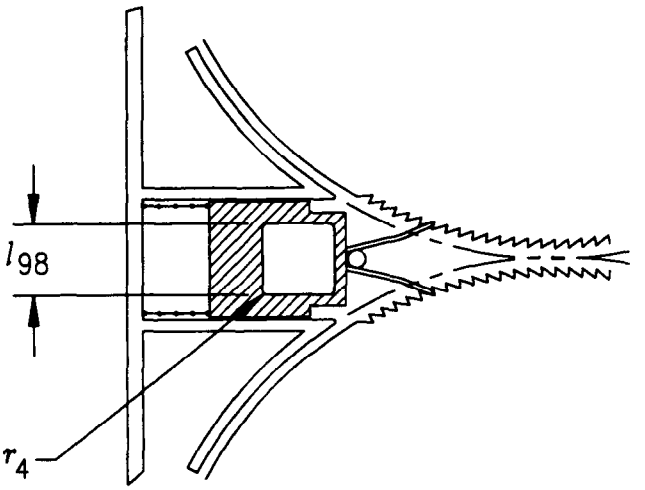

Figure 11 - Reel lock release

Copyright International Organization for Standardization
Provided by IHS under license with ISO
No reproduction or networking permitted without license from IHS
Not for Resale

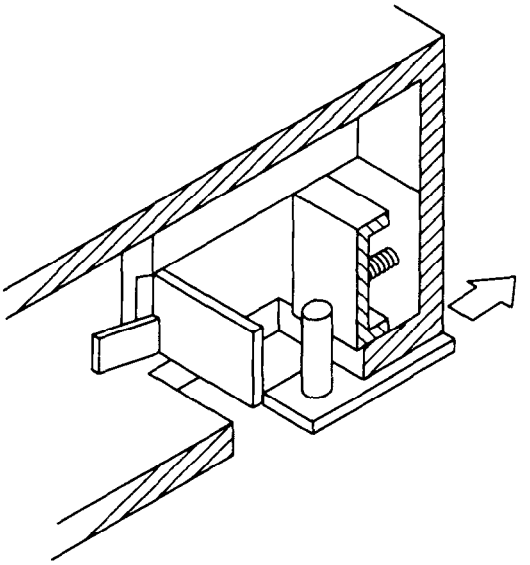

Figure 12 - Direction of force needed to unlock the reel lock

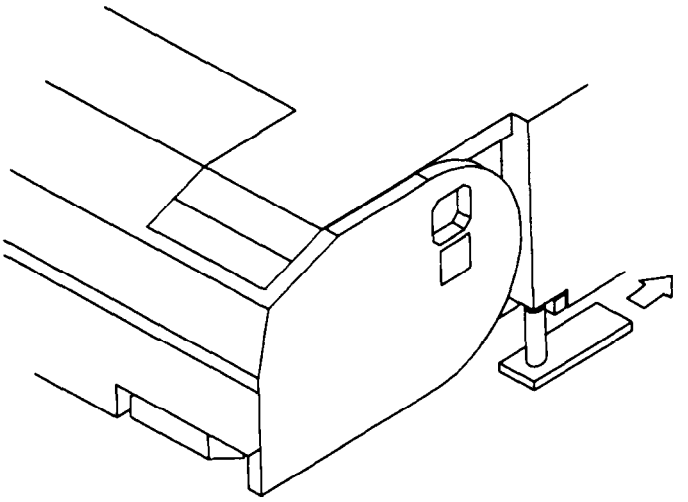

Figure 13 - Direction of force needed to unlock the lid lock

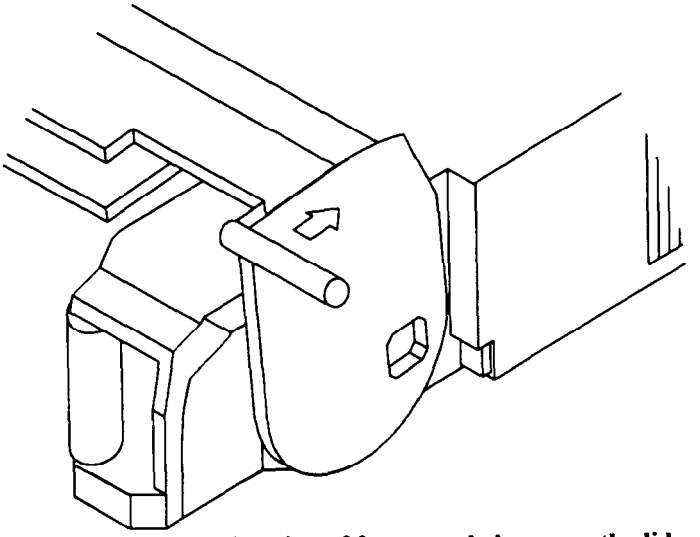

Figure 14 - Direction of force needed to open the lid

--`,,```,,,,````-`-`,,`,,`,`,,`---

Copyright International Organization for Standardization
Provided by IHS under license with ISO
No reproduction or networking permitted without license from IHS

Not for Resale

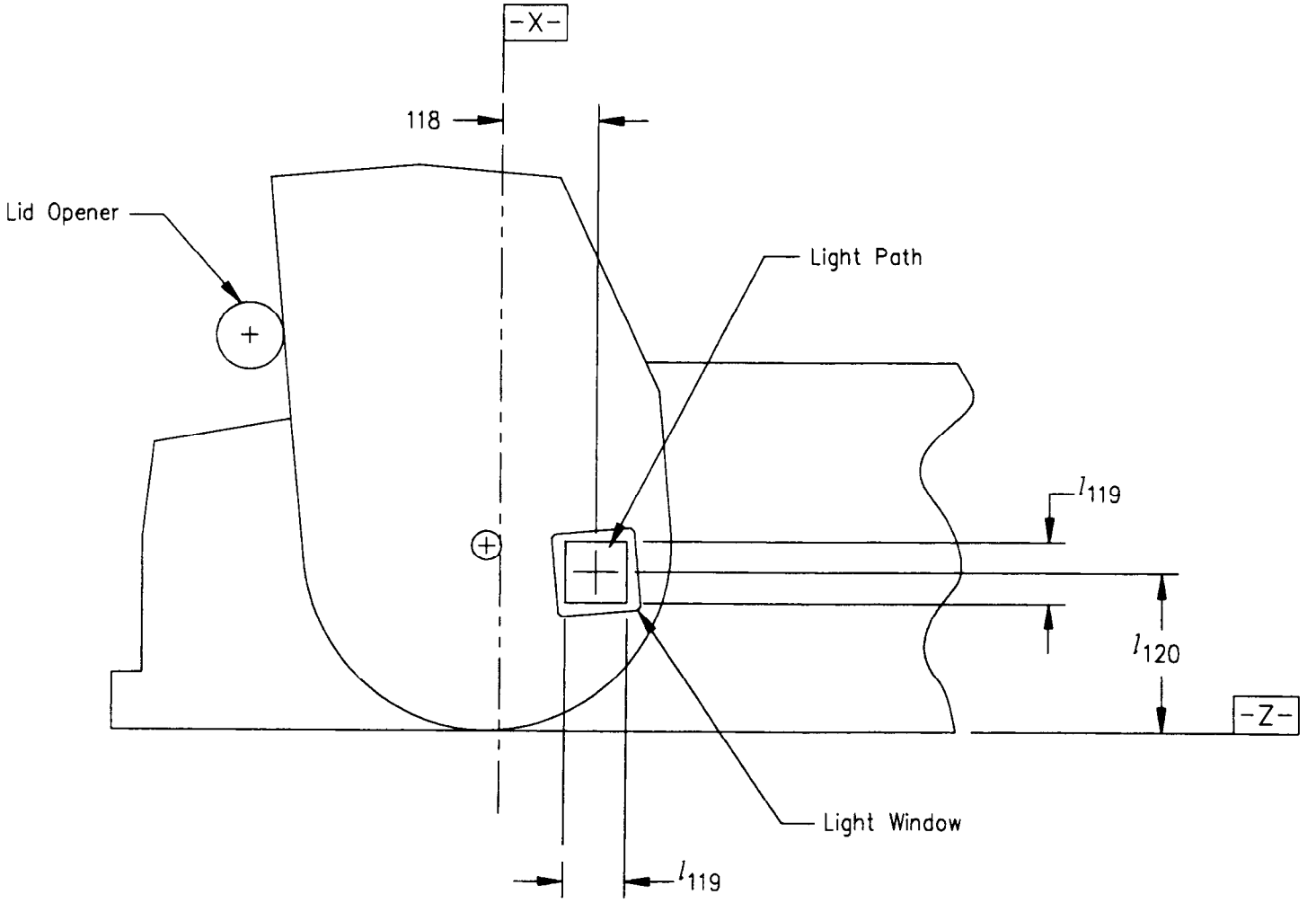

Figure 15 - Light path and light window

Copyright International Organization for Standardization
Provided by IHS under license with ISO
No reproduction or networking permitted without license from IHS
Not for Resale

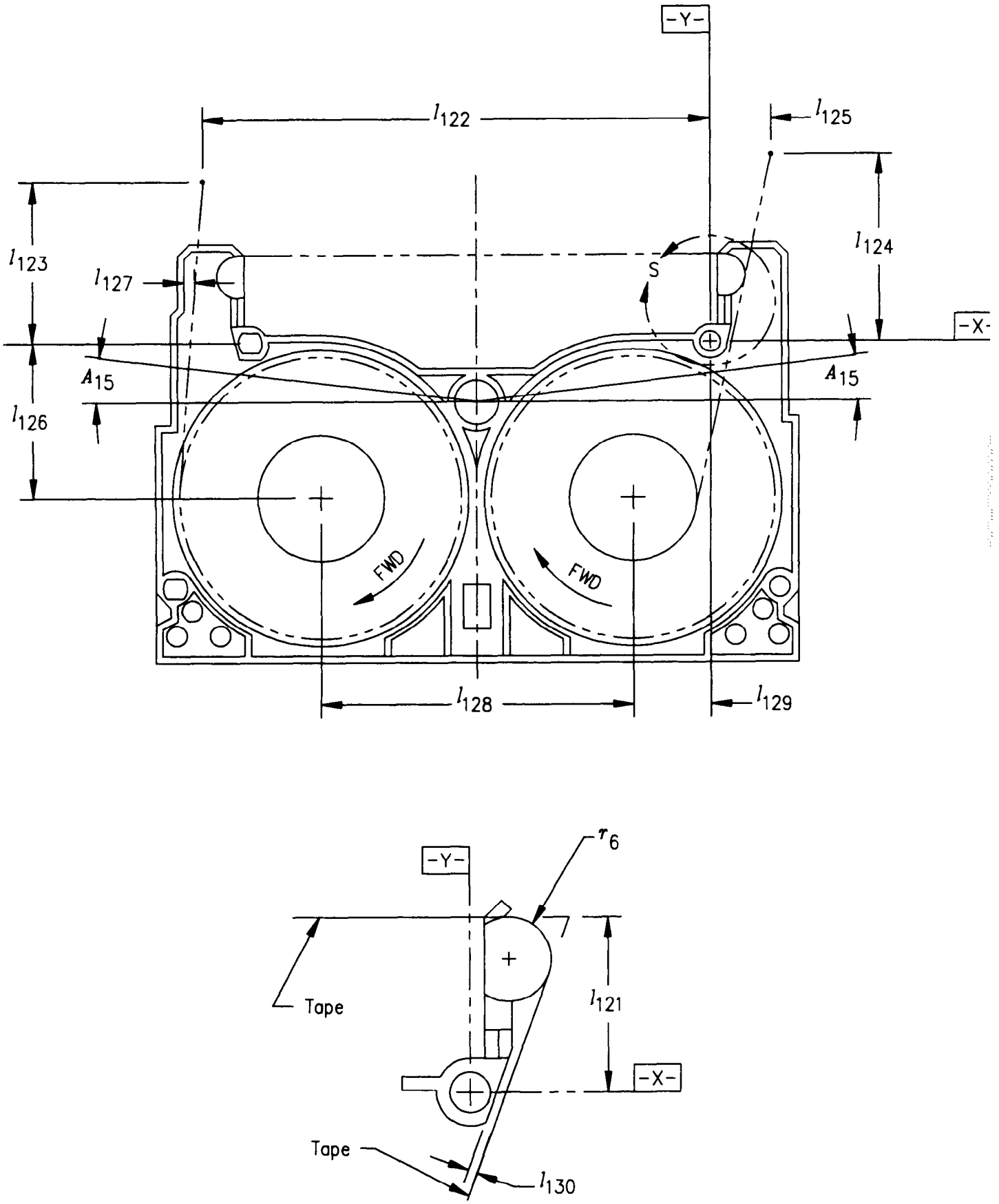

View S

Figure 16 - Internal tape path and light path

Copyright International Organization for Standardization
Provided by IHS under license with ISO
No reproduction or networking permitted without license from IHS
Not for Resale

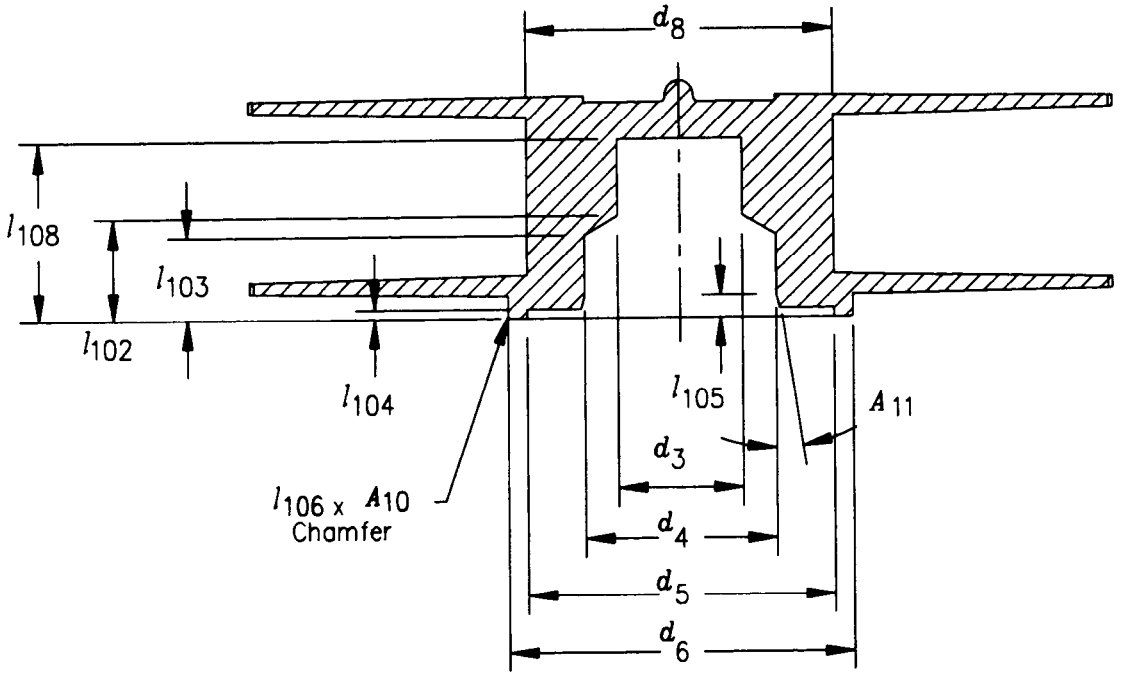

Section H–H

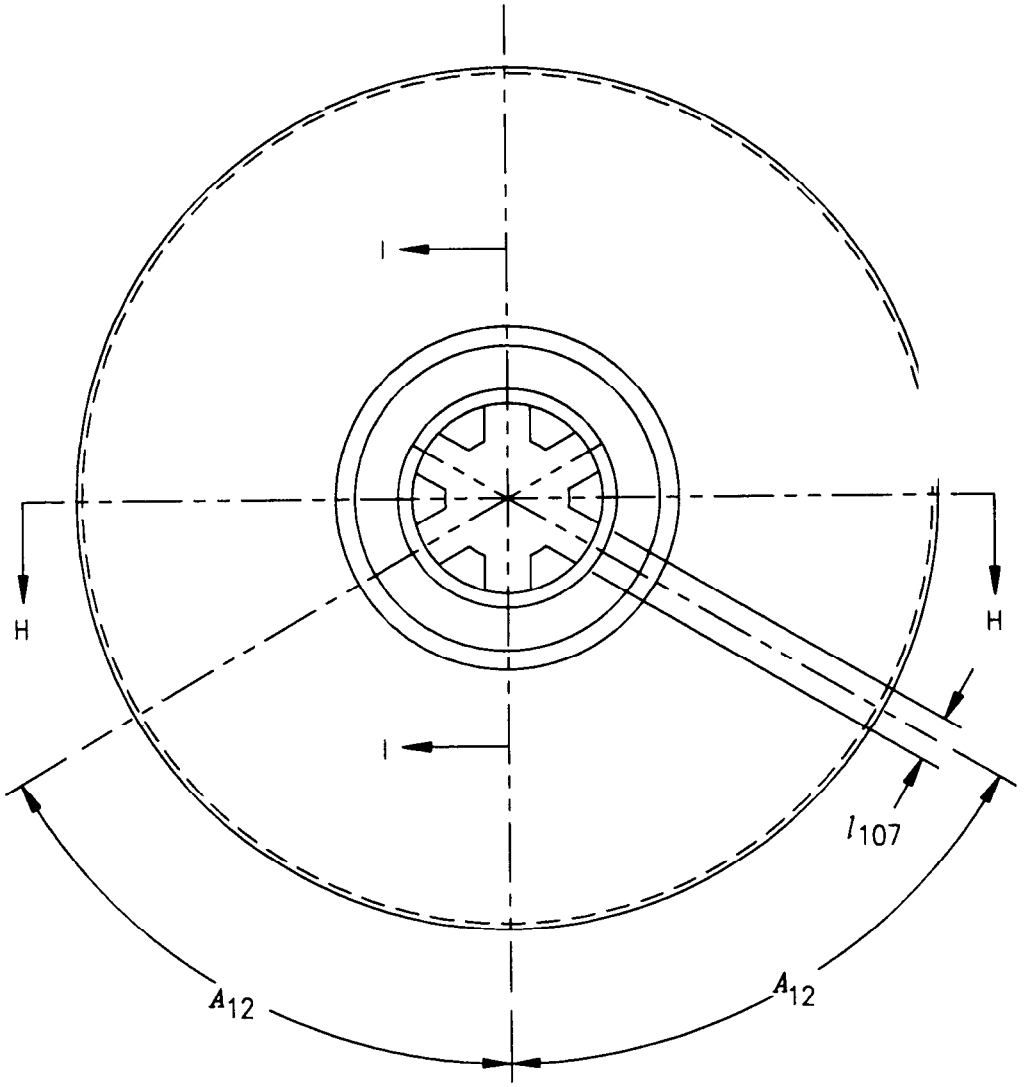

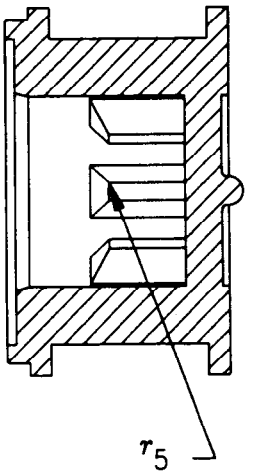

Section I–I

Figure 17 - Cartridge reel

Copyright International Organization for Standardization
Provided by IHS under license with ISO
No reproduction or networking permitted without license from IHS
Not for Resale

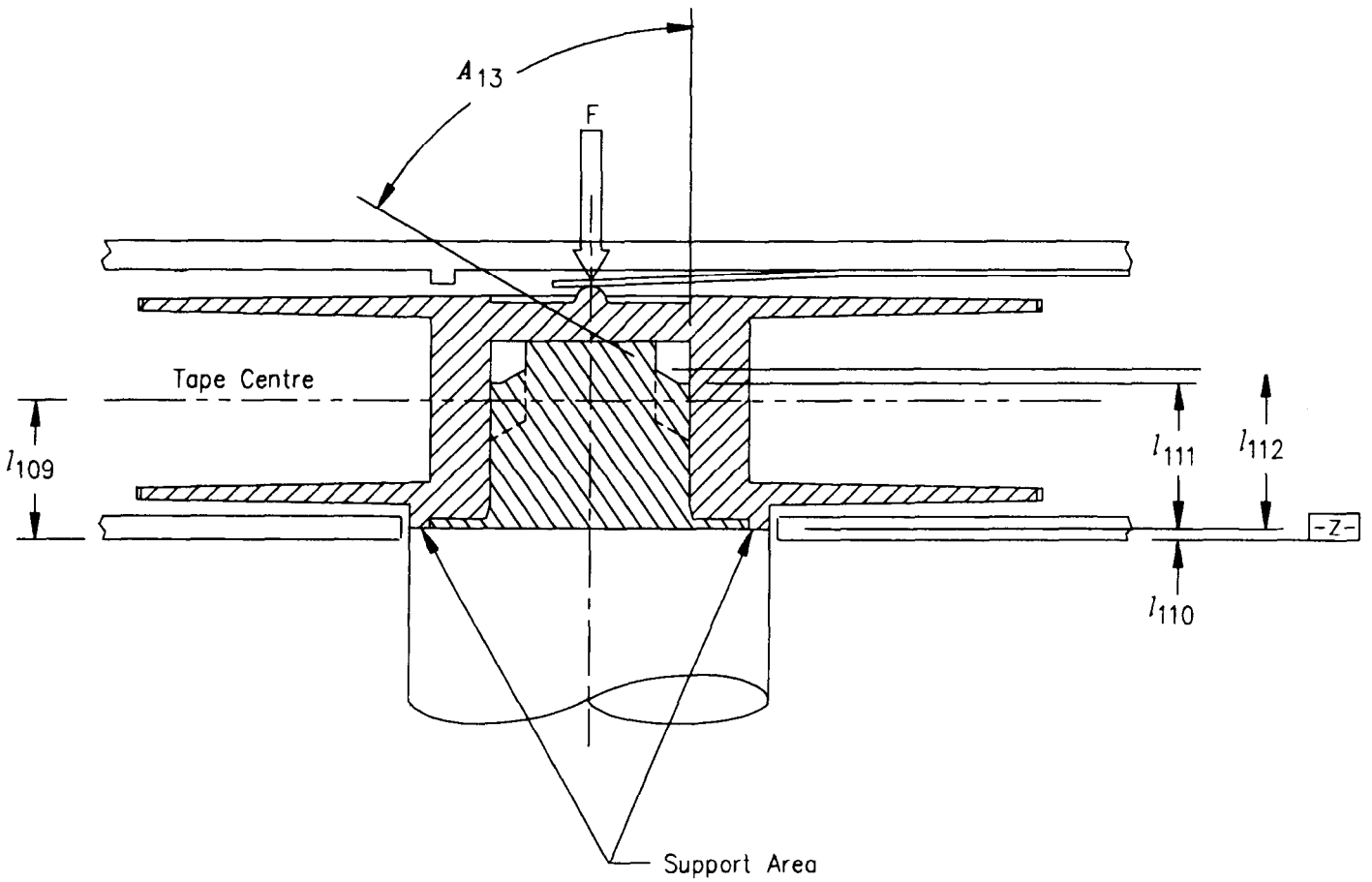

Figure 18 - Interface with drive spindle

Copyright International Organization for Standardization
Provided by IHS under license with ISO
No reproduction or networking permitted without license from IHS
Not for Resale

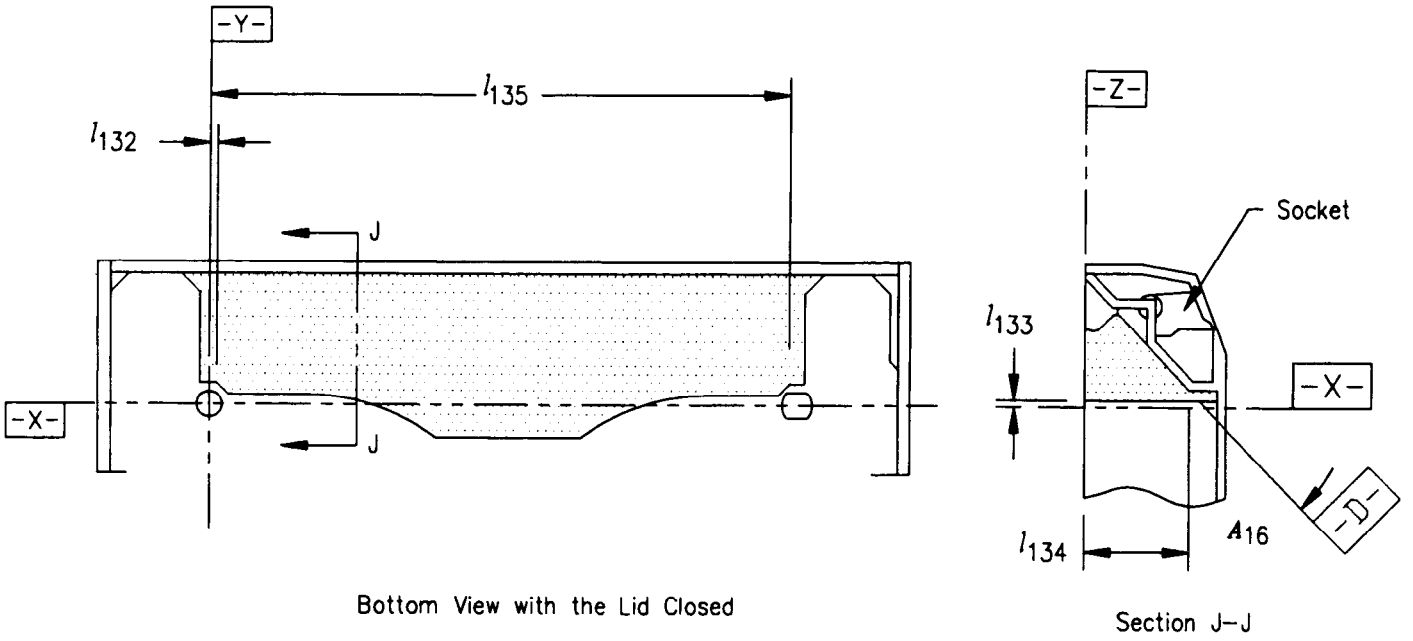

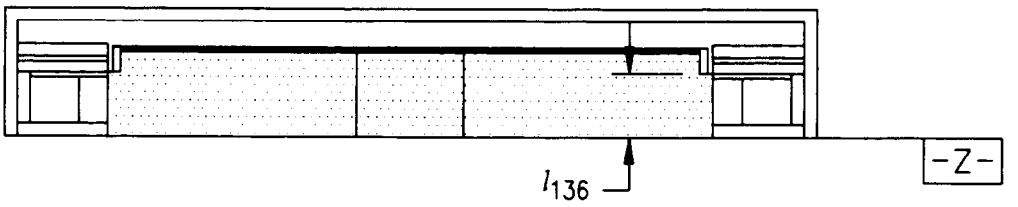

Figure 19 - Tape access cavity clearance

Copyright International Organization for Standardization
Provided by IHS under license with ISO
No reproduction or networking permitted without license from IHS
Not for Resale

Section 3 - Requirements for the unrecorded tape

7 Mechanical, physical and dimensional characteristics of the tape

7.1 Materials

The recordable area of the tape shall consist of a base material (oriented polyethylene terephthalate film or its equivalent) coated on one side with a strong yet flexible layer of ferromagnetic material. The back surface of the tape may be coated.

The leader and trailer tapes shall consist of a translucent length of the same or equivalent base material without the ferromagnetic coating or the back coating.

7.2 Tape length

7.2.1 Magnetic tape

The length of tape between PBOT and PEOT shall be 14,72 m min. and 113 m max.

7.2.2 Leader and trailer tapes

The length of the leader and trailer tapes shall be 70 mm min. and 90 mm max.

7.2.3 Splicing tape

The splicing tape shall have a maximum length of 13 mm.

7.3 Width

The width of the magnetic tape shall be 8,00 mm ± 0,01 mm. The difference between the largest and smallest width shall be no more than 6 µm peak-to-peak.

The width of the leader tape, trailer tape and splice shall be 8,00 mm ± 0,02 mm.

The width shall be measured across the tape from edge to edge.

Procedure

Cover a section of the tape with a glass microscope slide. Measure the width with no tension applied to the tape using a calibrated microscope, profile projector, or equivalent having an accuracy of at least 2,5 µm. Repeat the procedure to obtain tape widths at five or more different positions along a minimum tape length of 1 m. The tape width is the average of the widths measured.

7.4 Discontinuities

There shall be no discontinuities in the tape between PBOT and PEOT, such as those produced by tape splicings or perforations.

7.5 Thickness

7.5.1 Thickness of magnetic tape

This International Standard provides for two types of tape differing in thickness. The total thickness of a tape at any point shall be between 12,0 µm and 14,0 µm, or between 9,2 µm and 11,2 µm.

7.5.2 Thickness of leader and trailer tape

The thickness of the leader and trailer tape shall be between 13 µm and 17 µm.

7.6 Longitudinal curvature

The radius of curvature of the edge of the tape shall not be less than 33 m.

Procedure

Allow a 1 m length of tape to unroll and assume its natural curvature on a flat smooth surface. Measure the deviation from a 1 m chord.

Copyright International Organization for Standardization
Provided by IHS under license with ISO
No reproduction or networking permitted without license from IHS
Not for Resale

The deviation shall not be greater than 3,8 mm.

This deviation corresponds to the minimum radius of curvature of 33 m if measured over an arc of a circle.

7.7 Cupping

The departure across the width of tape from a flat surface shall not exceed 0,9 mm.

Procedure

Cut a 1,0 m ± 0,1 m length of tape. Condition it for a minimum of 3 h in the test environment by hanging it so that the coated surface is freely exposed to the test environment. From the centre portion of the conditioned tape cut a test piece of length 25 mm approximately. Stand the test piece on its end in a cylinder which is at least 25 mm high with an minimum inside diameter of 8 mm. With the cylinder standing on an optical comparator measure the cupping by aligning the edges of the test piece to the reticle and determining the distance from the aligned edges to the corresponding surface of the test piece at its centre.

7.8 Coating adhesion

See figure 20.

The force required to peel any part of the coating from the tape base material shall not be less than 0,10 N.

Procedure

Take a test piece of the tape approximately 380 mm long and scribe a line through the coating across the width of the tape 125 mm from one end. Using a double-sided pressure sensitive tape, attach the test piece to a smooth metal plate, with the coated surface facing the plate. Fold the test piece over 180° adjacent to, and parallel with the scribed line. Attach the metal plate and the free end of the test piece to the jaws of a tensometer such that when the jaws are separated the tape is peeled. Set the jaw separation rate to 254 mm/min. Note the force at which any part of the coating first separates from the base material. If this is less than 0,10 N, the test has failed. If the test piece peels away from the double-sided pressure sensitive tape before the force exceeds 0,10 N, an alternative type of double-sided pressure tape shall be used. If the back surface of the tape is coated, repeat a) to d) for the back coating.

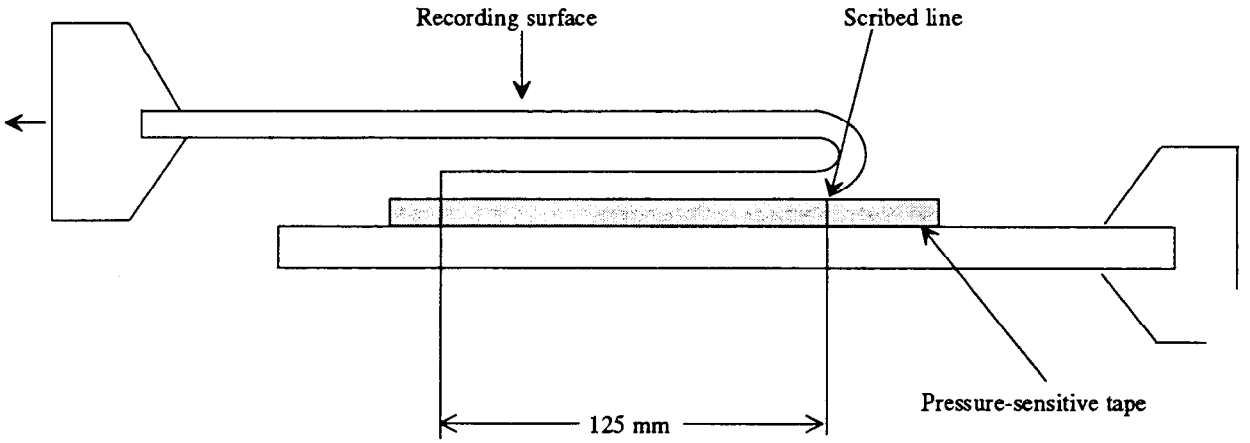

ECMA-93-0052A

Figure 20 - Setup for measuring coating adhesion

7.9 Layer-to-layer adhesion

There shall be no tendency for the test piece to stick or for the coating to peel.

Copyright International Organization for Standardization
Provided by IHS under license with ISO
No reproduction or networking permitted without license from IHS
Not for Resale

Procedure

Attach one end of a test piece of magnetic tape of 1 m in length to the surface of a glass tube of external diameter 36 mm. Wind the tape on to the tube at a tension of 1,1 N. Store the wound test piece in a temperature of 45 °C ± 3 °C and a relative humidity of 80 % for 4 h. Store for a further 24 h in the testing environment. Apply a force of 0,1 N to the free end of the test piece and allow it to unwind slowly.

7.10 Tensile strength

The measurements shall be made in accordance with ISO/R 527.

The length of the test piece shall be 200 mm. The rate of elongation for all tensile tests shall be 100 mm/min (ISO/R 527, rate D).

7.10.1 Breaking strength

Load the test piece until the breaking point of the test piece is reached. The force required to reach that point is the breaking strength of the tape. The breaking strength shall not be less than 17,6 N.

7.10.2 Yield strength

The yield strength is the force necessary to produce a 5 % elongation of the tape.

The yield strength shall be greater than 4,9 N.

7.11 Residual elongation

The residual elongation, stated in per cent of the original tape length, shall be less than 0,03 %.

Procedure

Measure the initial length of a test piece of approximately 1 m with a maximum applied force of 0,20 N. Apply an additional force per total cross-sectional area of 20,5 N/mm^2 for a period of 10 min. Remove the additional force and measure the length after 10 min.

7.12 Electrical resistance of the surface

The electrical resistance of any square area of the recording surface shall be within the ranges:

10^5 Ω to 5 x 10^8 Ω for non-back coated tape

10^5 Ω to 5 x 10^{12} Ω for back-coated tape

The electrical resistance of any square area of the back-coating, if present, shall be less than 9 x 10^8 Ω.

Procedure

Condition a test piece of tape in the test environment for 24 h. Position the test piece over two 24-carat gold-plated, semicircular electrodes having a radius r = 10 mm and a finish of at least N4, so that the recording surface is in contact with each electrode. These electrodes shall be placed parallel to the ground and parallel to each other at a distance d = 8 mm between their centres. Apply the force necessary to produce a tension of 5 N/mm^2 to each end of the test piece. Apply a d.c. voltage of 100 V ± 10 V across the electrodes and measure the resulting current flow. From this value, determine the electrical resistance. Repeat for a total of five positions along the test piece and average the five resistance readings. For back-coated tape repeat the procedure with the back-coating in contact with the electrodes. When mounting the test piece ensure that no conducting paths exist between the electrodes except that through the coating under test.

NOTE - Particular attention should be given to keeping the surfaces clean.

Copyright International Organization for Standardization
Provided by IHS under license with ISO
No reproduction or networking permitted without license from IHS
Not for Resale

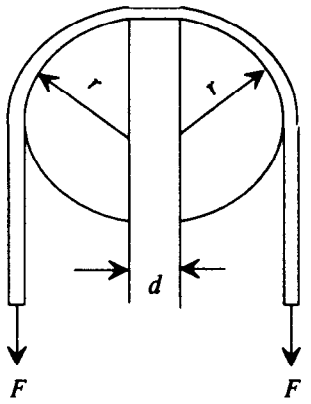

ECMA-93-0050A

Figure 21 - Setup for measuring electrical resistance

7.13 Tape winding

The magnetic recording surface of the tape shall face outward from the cartridge and reels.

7.14 Light transmittance of tape

The light transmittance of the magnetic tape shall be less than or equal to 5 %.

The light transmittance of the leader and trailer tapes shall not be less than 60 %.

The method for measuring light transmittance is given in annex A.

8 Magnetic recording performance

The magnetic recording performance is defined by the testing requirements given in the following clauses. When performing these tests, the head output or the resultant amplified signal shall be measured on the same relative pass for both a tape calibrated to the Secondary Reference Tape and the tape under test (read-while-write, or on equipment without read-while-write capability, on the first-forward-read-pass) on the same equipment.

8.1 Test conditions

The following conditions shall apply to all magnetic recording testing requirements, unless otherwise noted:

tape condition:	a.c. erased to 2 % or less of the Average Signal Amplitude recorded at 2 236 ftpmm
tape/head speed:	3,759 m/s ± 0,20 %
track width:	25 µm ± 1 µm
head gap azimuth:	-10,000° ± 0,133°
head gap length:	0,30 µm ± 0,05 µm
tape tension:	0,1170 N ± 0,0098 N
recording current:	Test Recording Current

8.2 Typical Field

The Typical Field of the tape shall be between 80 % and 120 % of the Secondary Reference Field.

Copyright International Organization for Standardization
Provided by IHS under license with ISO
No reproduction or networking permitted without license from IHS
Not for Resale

8.3 Signal amplitude

The Average Signal Amplitude, exclusive of missing pulses, at the recording density of 2 236 ftpmm shall be between 70 % and 130 % of the Secondary Reference Amplitude.

8.4 Resolution

The resolution of the tape shall be between 80 % and 120 % of that for the Secondary Standard Reference Tape when measured at the recording densities of 745,33 ftpmm and 2 236 ftpmm.

8.5 Narrow-band signal-to-noise ratio

The narrow-band signal-to-noise ratio (NB-SNR) is the average read signal power divided by the average integrated (side-band) rms noise power, and is expressed in decibels.

8.5.1 Requirement

The NB-SNR shall not be less than 34 dB when normalized to a track width of 25 µm. The normalization factor is dB(25) = dB(W) + 10 log 25/W, where W is the track width used when measuring decibels(W).

8.5.2 Procedure

The NB-SNR shall be measured using a spectrum analyzer. The spectrum analyzer resolution bandwidth (RBW) shall be 3 kHz and the video bandwidth (VBW) shall be 30 Hz.

Measure the read signal amplitude of the 2 236 ftpmm signal using a spectrum analyzer, taking a minimum of 150 samples over a minimum length of tape of 6 m.

On the next pass (read only), measure the rms noise power over the same section of tape and integrate the rms noise power (normalizing for the actual resolution bandwidth) over the range from 3,59 MHz to 3,96 MHz.

8.6 Ease of erasure

When a tape has been recorded at 745,33 ftpmm with a recording current equal to the Test Recording Current for 2 236 ftpmm and passed through a longitudinal steady erasing field of 320 000 A/m any remaining signal shall not exceed 2 % of the Secondary Reference Amplitude. The erasure field shall be reasonably uniform, for example, the field in the middle of a solenoid. This measurement shall be made with a band pass filter passing, at least, the first three harmonics.

8.7 Tape quality

8.7.1 Missing pulses

A missing pulse is a loss of read signal amplitude. A missing pulse exists when the base-to-peak read signal is 25 %, or less, of half the Average Signal Amplitude for the physical recording density of 2 236 ftpmm on the same tape.

8.7.2 Missing pulse zone

A missing pulse zone commences with 7 consecutive missing pulses and ends when 28 consecutive flux transitions are read or when a length of 0,038 mm of track has been measured. Any further missing pulse results in a further missing pulse zone.

A missing pulse zone does not continue from one track to another.

The average missing pulse zone rate is the total number of missing pulse zones divided by the total number of flux transitions recorded on the tape.

At a physical recording density of 2 236 ftpmm, this average missing pulse zone rate shall be less than 2×10^{-7}.

8.8 Inhibitor tape

This International Standard does not specify parameters for assessing whether or not a tape is an inhibitor tape. However, annex E gives further information on inhibitor tapes.

Copyright International Organization for Standardization
Provided by IHS under license with ISO
No reproduction or networking permitted without license from IHS
Not for Resale

Section 4 - Requirements for an interchanged tape

9 Format

9.1 General

Data to be recorded is sent from a host computer to the tape sub-system. The tape sub-system combines this data with additional information before recording onto the tape. The additional information includes a definition of the relationship of the host data, in the form of Logical Records of variable length, to a physical block of fixed length. The host data, when recorded, is identified as being compressed or uncompressed by the tape sub-system.

NOTE - While not limited by the format, known devices, using this format, support Logical Records of length 1 to 240 KBytes.

In the following description, all operations on the data received from the host computer, including the use of error detecting and correcting codes, are described. The method of recording on the tape and the tape layout itself are also described. However, because of the inherent characteristics of this format, where required, advance reference to the tape layout will also be made in the course of the description of the operations on the data.

9.2 Information Matrix

The data received from the host shall be allocated to a two dimensional group called an Information Matrix.

The Information Matrix shall be a 60-column by 24-row array containing 1 440 cells. Each cell is identified by its column and row numbers and contains a byte.

When complete an Information Matrix shall contain:

ID Information	14 bytes	see clause 15
Data bytes	1 024 bytes	see 9.2.1.1.2
CRC bytes	2 bytes	see 9.2.1.2
Horizontal EC bytes	160 bytes	see 9.2.1.3.1
Vertical EC bytes	240 bytes	see 9.2.1.3.2
Total:	1 440 bytes	

Copyright International Organization for Standardization
Provided by IHS under license with ISO
No reproduction or networking permitted without license from IHS
Not for Resale

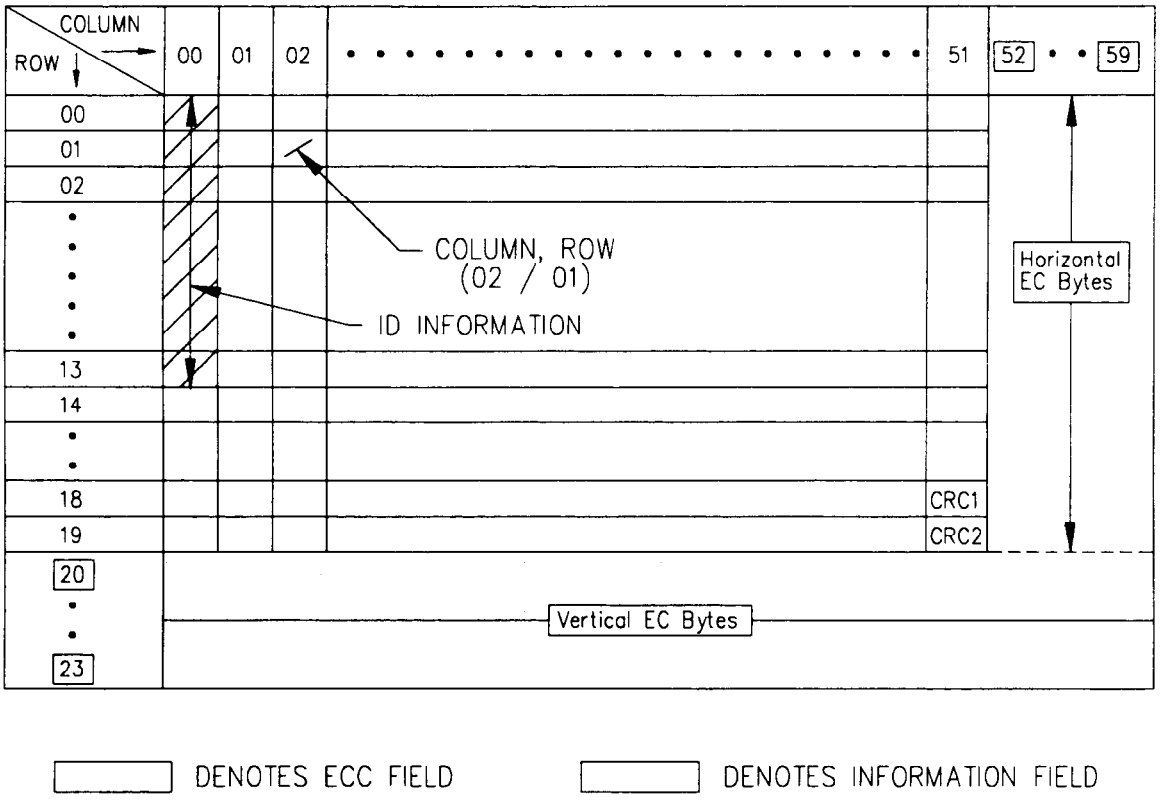

Figure 22 - Information Matrix

9.2.1 Loading of the Information Matrix

Cells are identified by column and row in the following form: 00/00 to 59/23. All additions in the calculations of CRC bytes and EC bytes are Exclusive OR operations.

9.2.1.1 Group 1 (G1)

A G1 group shall consist of 14 bytes of ID Information and 1 024 other bytes.

9.2.1.1.1 ID Information

ID Information shall be entered into cells 00/00 to 00/13. The content of these bytes is specified in clause 15.

9.2.1.1.2 Data bytes

Data bytes from the host shall be entered sequentially by column starting with 00/14 to 00/19, continuing with 02/00 to 02/19 through the even columns until 50/19, then returning to 01/00 to 01/19 and continuing through the odd columns until 51/17. This sequence shall be altered by the following 5 rules:

Rule 1: When the User Data bytes from the host comprise all or part of more than two Logical Records in this Information Matrix, a two-byte group shall be entered into the two cells preceding the first User Data byte of each of the third and subsequent Logical Records of this Information Matrix. The content of this two-byte group shall be

Copyright International Organization for Standardization
Provided by IHS under license with ISO
No reproduction or networking permitted without license from IHS
Not for Resale

Byte 0

Bits 7 to 5 - These bits shall be set to ZERO.

Bit 4 - This bit shall be set to ONE if the User Data in this Logical Record is compressed by the tape sub-system, else it shall be set to ZERO.

Bit 3 - This bit shall be set to ONE when this Logical Record is the last Logical Record in this Information Matrix, else it shall be set to ZERO.

Bit 2 - This bit shall be set to ONE when this Logical Record ends in this Information Matrix, else it shall be set to ZERO.

Bits 1 and 0 and Byte 1 - These bits shall express in binary notation a number that is one less than the number of bytes of this Logical Record that are contained in this Information Matrix. Bit 0 of Byte 1 is the least significant bit. If bit 7 of Byte 4 of a Format Block is set to a ONE, this number shall also include the CRC bytes if they are in this Information Matrix.

Rule 2: When bit 7 of Byte 4 of a Format Block is set to a ONE and this Logical Record ends in this Information Matrix, two CRC bytes shall be calculated for the User Data of this Logical Record and sequentially entered into the cells following the last byte of this Logical Record. As described in 15.3, the first Logical Record on the tape is Logical Record 0. The first byte of a Logical Record is Byte 0. The two CRC bytes are computed as follows:

where

D_k shall denote the kth byte of the Logical Record

D_{kj} shall denote the jth bit of the kth byte

n shall denote the number of User Data bytes in the Logical Record

$$\text{then} \quad D_k(x) = \sum_{j=0}^{j=7} D_{k,j} x^j$$

$$D(x) = \sum_{k=0}^{k=n-1} D_k(x) x^{8(n+1-k)}$$

$$G_{CRC}(x) = x^{16} + x^{12} + x^5 + 1$$

$$C(x) = D(x) \bmod G_{CRC}(x)$$

$$C(x) + x^{14} + x^{12} + x^{10} + x^8 + x^7 + x^5 + x^3 + x = \sum_{j=0}^{j=7} (CH_j x^{j+8} + CL_j x^j)$$

where $CH_0, CH_1, ..., CH_7$ are the bits of the first CRC byte (CH) and CH_7 is the most significant bit.

similarly $CL_0, CL_1, ..., CL_7$ are the bits of the second CRC byte (CL) and CL_7 is the most significant bit.

Rule 3: When User Data is to be compressed by the tape sub-system, the algorithm for compression (see 15.4.3) shall be applied and the compressed form of the User Data, padded with ZEROs to an even number of bytes, shall be loaded into the Information Matrix.

Rule 4: When the number of Data bytes is less than 1 024, the remaining bytes are set to all ZEROs. Some G1 groups contain no Data bytes (see 12.3).

Copyright International Organization for Standardization
Provided by IHS under license with ISO
No reproduction or networking permitted without license from IHS
Not for Resale

Rule 5: If this is an End of Data Block (see 12.3 and 14), bits 1 to 7 of Byte 14 shall be set to ZEROs and bit 0 of Byte 14 and Bytes 15, 16, 17 shall express the 25-bit Physical Block ID of one less than the Physical Block ID of the first End of Data Block on this tape.

9.2.1.2 Group 2 (G2)

A G2 group shall consist of a G1 group with the addition of two CRC bytes.

The two CRC bytes shall be computed over the 1 038 bytes of the G1 group and entered into cells 51/18 and 51/19.

They are generated as follows:

D_k is the byte in column c and row r

where:

$k = 0$ to 1 037

$k = (10c + r)$, if c is even

$k = (10c + r + 510)$, if c is odd

$c = 0$ to 51

$r = 0$ to 19

$D_{k,0}, D_{k,1}, \ldots, D_{k,7}$ denote the 8 bits of D_k, where $D_{k,7}$ is the high order bit.

$$D_k(x) = \sum_{j=0}^{j=7} D_{kj} x^j$$

$$D(x) = \sum_{k=0}^{k=1037} D_k(x) x^{8(1039-k)}$$

$$G_{CRC}(x) = x^{16} + x^{12} + x^5 + 1$$

$$C(x) = D(x) \bmod G_{CRC}(x)$$

$$C(x) + x^{14} + x^{12} + x^{10} + x^8 + x^7 + x^5 + x^3 + x = \sum_{k=0}^{k=7} (CH_k x^{k+8} + CL_k x^k)$$

where

$CH_0, CH_1, \ldots, CH_7$ are the bits of the first CRC byte (CRC1), CH_7 being the most significant bit.

$CL_0, CL_1, \ldots, CL_7$ are the bits of the second CRC byte (CRC2), CL_7 being the most significant bit.

9.2.1.3 ECC

For the Error-Correcting Code (ECC), the (30,26,5) Reed-Solomon code is used for the horizontal code, and the (24,20,5) Reed-Solomon code is used for the vertical code.

This yields two types of check bytes:

- Horizontal EC bytes
- Vertical EC bytes

Copyright International Organization for Standardization
Provided by IHS under license with ISO
No reproduction or networking permitted without license from IHS
Not for Resale

$T[A]$ denotes a linear transformation on the 8-bit byte A.

$T^{-1}[B]$ denotes the inverse transformation and defines the transformation in the following way:

$B = T[A]$ and $A = T^{-1}[B]$

$A_0, A_1, \ldots\ldots, A_7$ are the 8 bits of A (A_7 being the most significant bit) and $B_0, B_1, \ldots\ldots, B_7$ are the 8 bits of B (B_7 being the most significant bit.)

These transformations are defined by the following:

$B_0 = A_0+A_2+A_3+A_5+A_7$ $\qquad$ $A_0 = B_5$

$B_1 = A_3+A_4+A_6+A_7$ $\qquad$ $A_1 = B_4$

$B_2 = A_0+A_6+A_7$ $\qquad$ $A_2 = B_3+B_7$

$B_3 = A_0+A_1+A_6$ $\qquad$ $A_3 = B_2+B_6+B_7$

$B_4 = A_1$ $\qquad$ $A_4 = B_1+B_5+B_6+B_7$

$B_5 = A_0$ $\qquad$ $A_5 = B_0+B_4+B_5+B_6$

$B_6 = A_1+A_2+A_3+A_7$ $\qquad$ $A_6 = B_3+B_4+B_5$

$B_7 = A_0+A_1+A_2+A_6$ $\qquad$ $A_7 = B_2+B_3+B_4$

The field generator for $GF(2^8)$ is

$G_\alpha(x) = x^8 + x^4 + x^3 + x^2 + 1$

B is an element of $GF(2^8)$ such that

$$B = \sum_{k=0}^{k=7} B_k \alpha^k$$

Where $B_0, B_1, \ldots\ldots, B_7$ are the bits of B, B_7 being the most significant bit.

$$G(x) = \prod_{i=-1}^{i=2} (x + \alpha^i)$$

9.2.1.3.1 Group 3 (G3)

A G3 group shall consist of a G2 group with the addition of the Horizontal EC bytes.

$D_{c,r}$ denotes the bytes in the G2 group where c is the column number (0 to 51) and r is the row number (0 to 19).

$DHE_r(x)$ denotes the polynomial whose coefficients are the transforms of the bytes in the even columns of row r. $T[CRE_{k,r}]$ denotes the transforms of the Horizontal EC bytes in the even columns of row r. $CRE_{k,r}$ denotes the Horizontal EC bytes in the even columns of row r.

$$DHE_r(x) = \sum_{k=0}^{k=25} T\left[D_{2k,r}\right] x^{29-k}$$

$r = 0,1, \ldots\ldots, 19$

Copyright International Organization for Standardization
Provided by IHS under license with ISO
No reproduction or networking permitted without license from IHS
Not for Resale

$$DHE_r(x) \bmod G(x) = \sum_{k=1}^{k=4} T\left[CRE_{k,r}\right] x^{4-k}$$

$CRE_{k,r} = T^{-1}[T[CRE_{k,r}]]$

$k = 1,2,3,4$

$CRE_{k,r}$ shall be the contents of the cell in column c and row r where $c = 50 + 2k$.

Similarly, $DHO_r(x)$ denotes the polynomial whose coefficients are the transforms of the bytes in the odd columns of row r. $T[CRO_{k,r}]$ denotes the transforms of the Horizontal EC bytes in the odd columns of row r. $CRO_{k,r}$ denotes the Horizontal EC bytes in the odd columns of row r.

$$DHO_r(x) = \sum_{k=0}^{k=25} T\left[D_{(2k+1),r}\right] x^{29-k}$$

$r = 0,1, ..., 19$

$$DHO_r(x) \bmod G(x) = \sum_{k=1}^{k=4} T\left[CRO_{k,r}\right] x^{4-k}$$

$CRO_{k,r} = T^{-1}[T[CRO_{k,r}]]$

$k = 1,2,3,4$

$CRO_{k,r}$ shall be the contents of the cell in column c and row r where $c = 51 + 2k$.

9.2.1.3.2 Group 4 (G4)

A G4 group shall consist of a G3 group with the addition of the Vertical EC bytes.

$D_{c,r}$ denotes each byte in the G3 group consisting of all columns in rows 0 to 19 where c is the column number (0 to 59) and r is the row number (0 to 19).

$DV_c(x)$ denotes the polynomial whose coefficients are the transforms of the bytes in column c. $T[CC_{c,k}]$ denotes the transforms of the Vertical EC bytes in column c. $CC_{c,k}$ denotes the Vertical EC bytes in column c.

$$DV_c = \sum_{k=0}^{k=19} T\left[D_{c,k}\right] x^{23-k}$$

$c = 0,1, ..., 59$

$$DV_c(x) \bmod G(x) = \sum_{k=0}^{k=4} T\left[CC_{c,k}\right] x^{4-k}$$

$CC_{c,k} = T^{-1}[T[CC_{c,k}]]$

$k = 1,2,3,4$

$CC_{c,k}$ shall be the contents of the cell in column c and row r where $r = 19 + k$.

--`,,```,,,,````-`-`,,`,,`,`,,`---

Copyright International Organization for Standardization
Provided by IHS under license with ISO
No reproduction or networking permitted without license from IHS
Not for Resale

10 Method of recording

The method of recording shall be NRZ1 (non-return to ZERO, change on ONEs).

- A ONE is represented by a flux transition at the centre of a bit cell.
- A ZERO is represented by the absence of flux transitions from the bit cell.

10.1 Physical recording density

The maximum physical recording density shall be 2 236 ftpmm and occurs for a pattern of all ONEs. The resulting nominal bit cell length is 0,447 µm.

10.1.1 Long-term average bit cell length

The long-term average bit cell length for each track shall be measured over a minimum of 140 083 consecutive bit cells. It shall be within 0,20 % of the nominal bit cell length.

10.1.2 Short-term average bit cell length

The short-term average bit cell length (STA) shall be the average taken over any 16 bit cells. The short-term average bit cell length shall be within 0,35 % of the long-term average bit cell length for the preceding track.

10.1.3 Rate of change

The rate of change of the short-term average flux transition cell length, taken over any two consecutive 16-bit cell lengths, shall not exceed 0,05 %.

STA_n	STA_{n+1}
16 Channel Bits	16 Channel Bits

$$\text{Rate of change} = 100\ \% \times |STA_n - STA_{n+1}| / STA_n$$

10.2 Bit shift

The maximum displacement of any ONEs zero crossing, exclusive of missing pulses, shall not deviate by more than 25 % from the expected position as defined by the average bit cell length.

See annex B for the method of measurement.

10.3 Read signal amplitudes

10.3.1 Amplitude of data signals

The signal amplitude averaged over a minimum of 1 800 flux transitions at 2 236 ftpmm, exclusive of missing pulses, shall be between 70 % and 130 % of the Secondary Reference Amplitude.

10.3.2 Amplitude of servo signals

The servo signal amplitude averaged over any Servo Zone (see 12.6) shall be between 70 % and 130 % of a 745,33 ftpmm signal recorded on the Secondary Standard Reference Tape with the Test Recording Current.

10.4 Erasure

In all erased areas the full width of the tape shall be a.c. erased in the direction of tape motion. After erasure, the read signal amplitude shall be no greater than 2 % of the Average Signal Amplitude recorded at the physical recording density of 2 236 ftpmm on the same tape.

Copyright International Organization for Standardization
Provided by IHS under license with ISO
No reproduction or networking permitted without license from IHS
Not for Resale

11 Track geometry

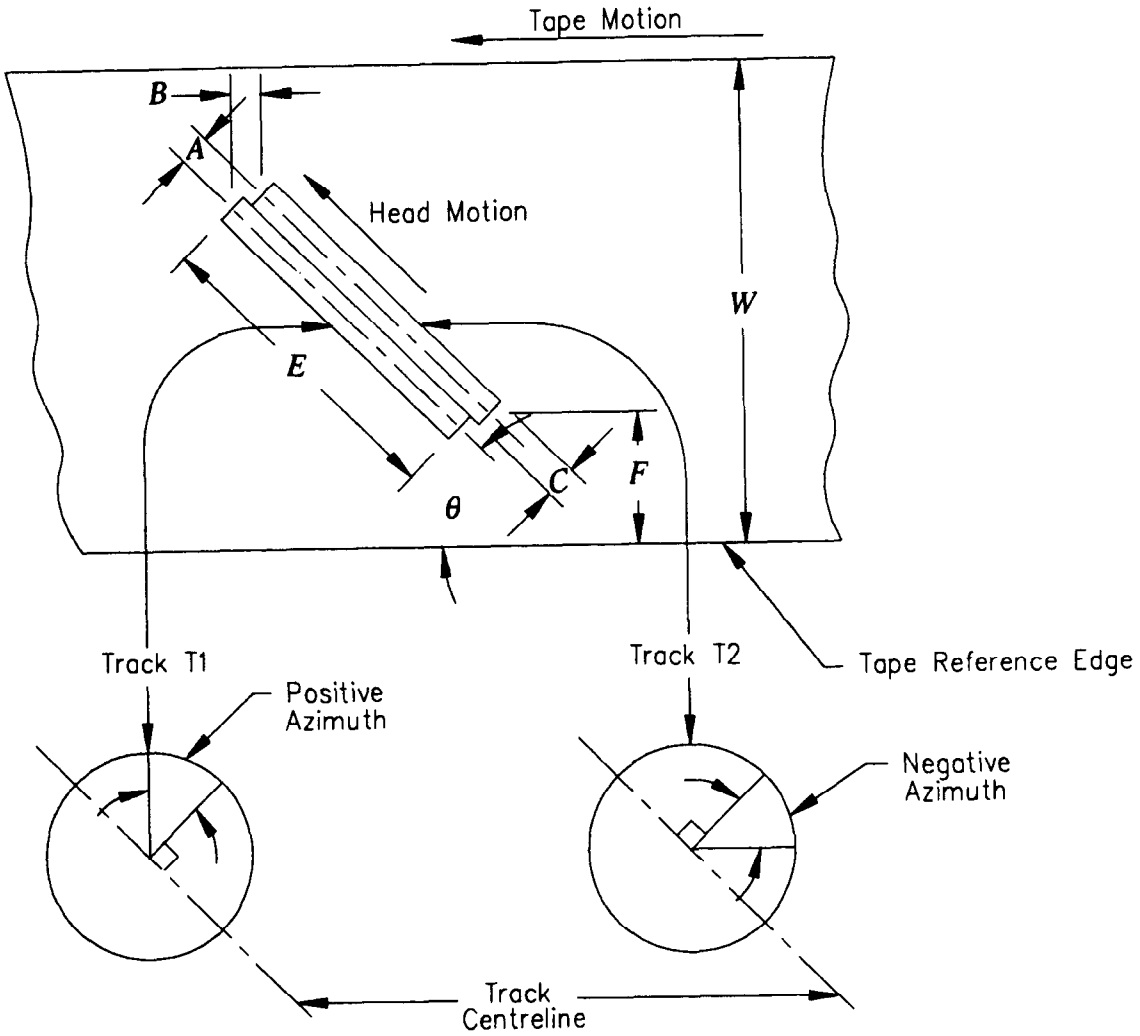

Figure 23 - Track layout and track location

11.1 Track positions

A : Adjacent track pitch
B : Longitudinal track pitch
C : Track width
E : Recorded track length
F : Guard band
W : Tape width
θ : Track angle

Copyright International Organization for Standardization
Provided by IHS under license with ISO
No reproduction or networking permitted without license from IHS
Not for Resale

Each recorded track shall be of length E = 62,651 mm ± 0,144 mm. There shall be a Guard Band of width F = 1,785 mm ± 0,018 mm extending from the start of the recorded tracks to the Tape Reference Edge.

11.2 Track pitch

11.2.1 Adjacent track pitch

The distance A between the centrelines of any two adjacent tracks, excluding the last track recorded on this tape, measured perpendicular to the track length, shall be between 14,0 µm and 17,0 µm.

11.2.2 Average track pitch

The distance averaged over any group of 60 consecutive tracks, excluding the last track recorded on this tape, between the centreline of any track and the centreline of an adjacent track, measured perpendicular to the track length, shall be between 15,4 µm and 15,6 µm.

NOTE - The corresponding average longitudinal distance B measured parallel to the Reference Edge of the tape is 0,181 mm nominal.

11.3 Track width

The width C of a recorded track, excluding the last track recorded on this tape, shall be 15,5 µm ± 2,0 µm.

11.4 Track angle

The angle θ of the centreline of each track in degrees of arc relative to the reference edge shall be 4,899 1° ± 0,001 5°.

11.5 Straightness of track edge

The edges of a recorded track shall each be contained within two parallel straight lines 5 µm apart.

11.6 Azimuth

The recorded bit azimuth for track T1 shall be +20,014 1° ± 0,134 5°

The recorded bit azimuth for track T2 shall be -9,987 9° ± 0,134 5°

12 Format of a track

12.1 Channel Bit

A Channel Bit occupies a bit cell.

The Bit Synchronization Field, Preamble and Postamble are specified in Channel Bits.

Each Information Segment Number is represented by a pattern of 10 Channel Bits (see 12.2.2).

Each 8-bit byte in the Information Segment Field is represented by a pattern of 10 Channel Bits as defined in annex C.

12.2 Information Segment

An Information Segment shall be structured as shown in figure 24.

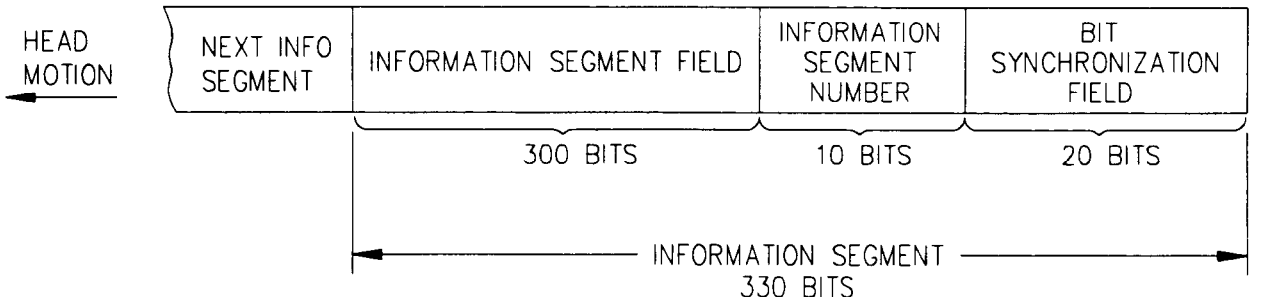

Figure 24 - Information Segment Layout

Copyright International Organization for Standardization
Provided by IHS under license with ISO
No reproduction or networking permitted without license from IHS
Not for Resale

12.2.1 Bit Synchronization Field

The Bit Synchronization Field shall be a 20-bit pattern comprising a leading ZERO, eighteen ONEs, and a trailing ZERO

12.2.2 Information Segment Number

An Information Segment Number in the range of 00 to 47 shall be represented by a 10-bit pattern as defined in table 1. The bit in the highest numbered position of the pattern (bit 10) shall be recorded first.

Table 1 - Representation of the Information Segment Numbers

Information Segment Number	Recorded Pattern	Information Segment Number	Recorded Pattern
00	1111111011	24	1011111111
01	1111111101	25	1101111101
02	1111110111	26	1101110111
03	1111110101	27	1101110101
04	1110111011	28	1011011111
05	1110111101	29	1011011101
06	1110110111	30	1011010111
07	1110110101	31	1011010101
08	1101011011	32	1110111111
09	1101011101	33	1111101111
10	1101010111	34	1111101101
11	1101010101	35	1111101011
12	1011111011	36	1101011111
13	1011111101	37	1110101111
14	1011110111	38	1110101101
15	1011110101	39	1110101011
16	1010111011	40	1010111111
17	1010111101	41	1011101111
18	1010110111	42	1011101101
19	1010110101	43	1011101011
20	1111011111	44	1011111111
21	1111011101	45	1010101111
22	1111010111	46	1010101011
23	1111010101	47	1101101011
Bit position	10 1		10 1

12.2.3 Information Segment field

The Information Segment field shall comprise 300 channel bits representing 30 data bytes unloaded from the Information Matrix. Each row (R) of the Information Matrix shall be divided into two Information Segment fields, 00/R to 29/R and 30/R to 59/R. These shall be numbered as shown in figure 25. They shall be unloaded in this sequence.

Copyright International Organization for Standardization
Provided by IHS under license with ISO
No reproduction or networking permitted without license from IHS
Not for Resale

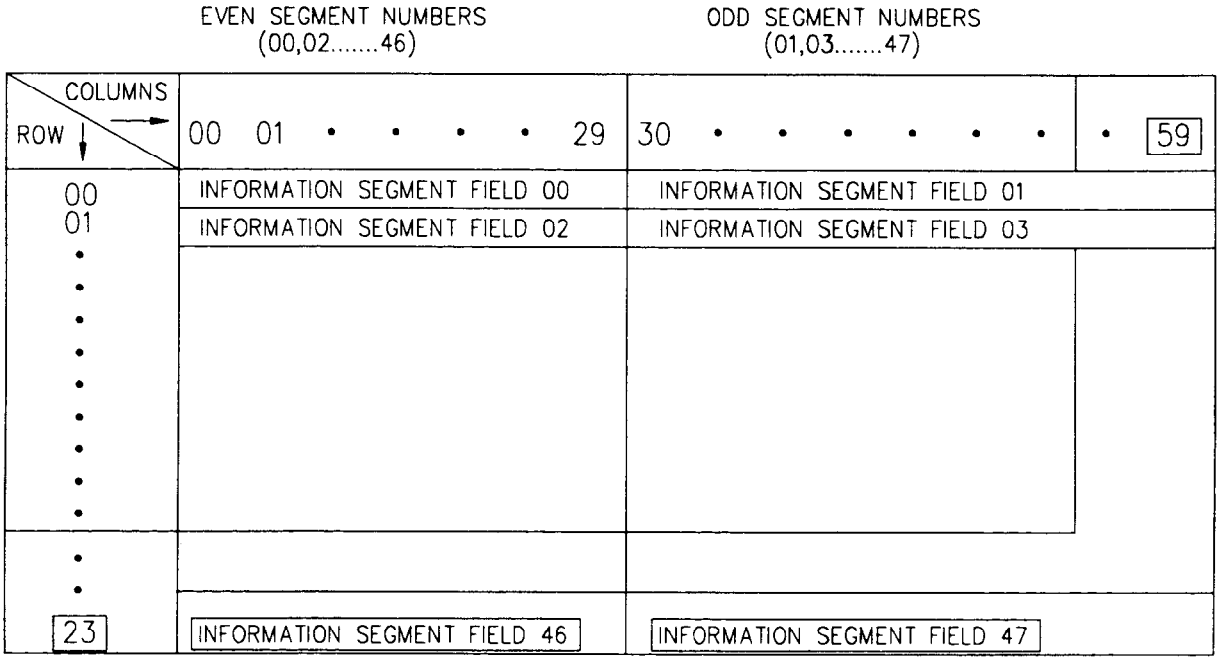

Figure 25 - Segment field partitioning of the Information Matrix

12.3 Information Block

An Information Block shall consist of 48 Information Segments numbered sequentially from 00 to 47. Information Segment 00 shall be recorded first.

There are six types of Information blocks: Data Block, Gap Block, Format Block, Long Tape Mark Block, Short Tape Mark Block and an End of Data Block (EOD). They are identified in the ID Information (see 15.4).

Except for the ID Information, the bytes in the G1 group of the Gap Block, of the Format Block, of the Long Tape Mark Block and of the Short Tape Mark Block are undefined and shall be ignored for interchange.

12.4 Physical track types

T1 and T2 are the two types of physical track (see 11.6). Each track shall be of a length equal to 140 083 channel bits ± 100 ONEs channel bits.

Copyright International Organization for Standardization
Provided by IHS under license with ISO
No reproduction or networking permitted without license from IHS
Not for Resale

12.4.1 T1 and T2 track layouts

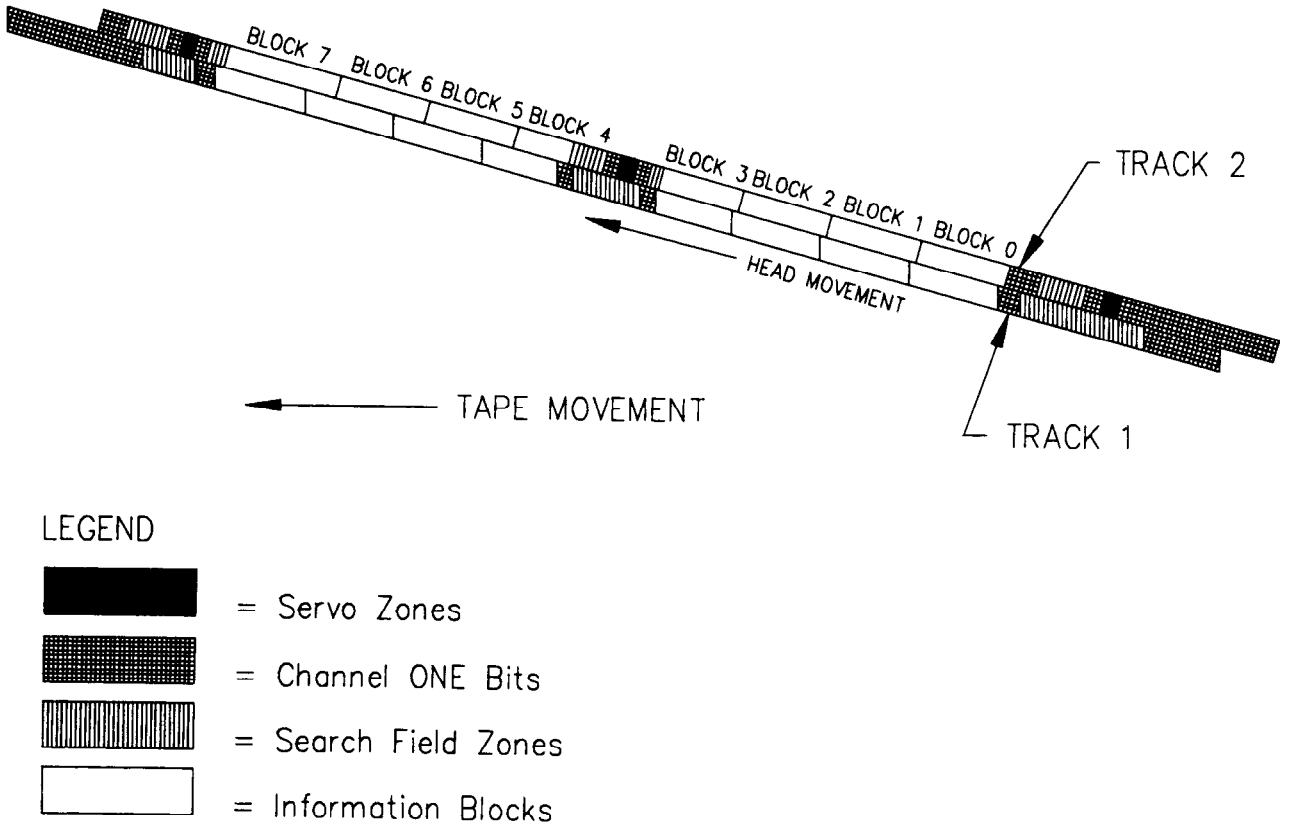

Figure 26 - T1 and T2 track layouts

A T1 track shall consist of a preamble, eight information blocks divided and bounded by search field zones and ending with a postamble.

A T2 track shall consist of a preamble, eight information blocks divided and bounded by search field zones and servo zones and ending with a postamble.

The Preamble for a T1 track shall consist of 1 093 ONEs channel bits ± 50 ONEs channel bits. The Preamble for a T2 track shall consist of 1 503 ONEs channel bits ± 50 ONEs channel bits.

The Postamble for a T1 track shall consist of 2 120 ONEs channel bits ± 50 ONEs channel bits. The Postamble for a T2 track shall consist of 931 ONEs channel bits ± 50 ONEs channel bits.

12.5 Search Field Zones

All tracks shall contain Search Field Zones. Search Field Zones shall consist of a combination of Channel Bits and Search Field Data Zones.

12.5.1 Search Field Data Zones

A Search Field Data Zone shall contain a 30 Channel Bit pattern of the sequence 011111111111111111101101111011 followed by 23 information bytes and two check bytes. All Search Field Data Zones of a recorded track shall contain the same data. Each 8-bit information byte and each check byte of a Search Field Data Zone shall be represented by a pattern of 10 Channel Bits as defined in annex C. A recorded Search Field Data Zone shall contain 280 Channel Bits.

Copyright International Organization for Standardization
Provided by IHS under license with ISO
No reproduction or networking permitted without license from IHS
Not for Resale

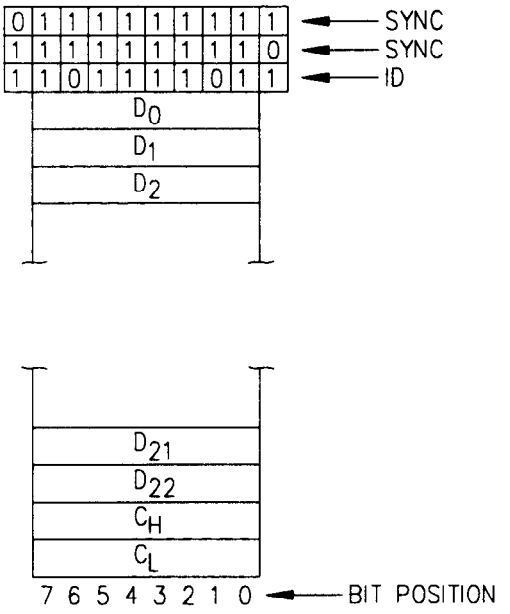

Figure 27 - Search Field Data Zone

Bytes 0 to 2

These bytes shall contain a number that represents the number of Long and Short Tape Marks recorded from LBOT to the previous track. These bytes on tracks prior to the first tape mark on this tape shall contain a count of 0. The number shall be incremented by one following a T1 track that contains one or more Long Tape Mark Blocks.

The number shall be not be incremented for Short Tape Mark Blocks containing an ID Information Byte 0, bit 5 set to ONE, indicating that the block is a rewrite. For other Short Tape Mark Blocks it shall be incremented.

Bytes 3 to 6

These bytes shall contain the largest Logical Record ID number recorded on this tape prior to this track.

Bytes 7 to 10

These bytes shall contain the largest Physical Block ID number contained in the previous track.

Byte 11

This byte shall be set to all ZEROs.

Byte 12

Bit 7 - This bit shall be set to ONE if, and only if, this is an EOD track, else it shall be set to ZERO.

Bits 6 to 0 - These bits shall be set to ZERO.

Bytes 13 to 16

These bytes shall be set to all ZEROs if the track is a Format Track. In other tracks, these bytes shall contain n-1 where n is the smallest Logical Block ID that has not had a confirmed copy recorded prior to the current track. An exception to this is the case where n=0. In this case these bytes shall be set to all ZEROs.

Copyright International Organization for Standardization
Provided by IHS under license with ISO
No reproduction or networking permitted without license from IHS
Not for Resale

Bytes 17 to 20

If this is a Format Track these bytes shall be set to all ZEROs. Otherwise, these bytes shall contain the largest Logical Block ID recorded on this tape between LBOT and this track.

Bytes 21 and 22

These bytes shall be set to all ZEROs.

Bytes C_H and C_L -

These bytes shall contain the check bytes computed over the 23 information bytes of this Search Field Data Zone. These bytes shall be generated in the following way.

Let k be the subscript of the data (D_0 to D_{22}) then

$$D(x) = \sum_{k=0}^{k=22} D_k x^{23-k}$$

$C_H = D(x) \bmod (x+\alpha^1)$

where α^1 is from GF(2^8) generated by

$G_\alpha(x) = x^8 + x^4 + x^3 + x^2 + 1$

$$C_L = C_H + \sum_{k=0}^{k=22} D_k$$

12.5.2 Search Field Zone Sequence of recording

12.5.2.1 T1

A T1 track shall contain three Search Field Zones.

The first Search Field Zone, of 3 760 Channel Bits in length, shall follow the Preamble and shall contain the sequence of 80 ONEs Channel Bits and the Search Field Data Zone, repeated 10 times, followed by 160 ONEs Channel Bits.

The second Search Field Zone, of 3 870 Channel Bits in length, shall follow the fourth Information Block and shall contain 55 ONEs Channel Bits, followed by the sequence of 80 ONEs Channel Bits and the Search Field Data Zone, repeated 10 times, followed by 215 ONEs Channel Bits.

The third Search Field Zone, of 2 520 Channel Bits in length, shall follow the eighth Information Block and shall contain the sequence of 80 ONEs Channel Bits and the Search Field Data Zone, repeated 7 times.

12.5.2.2 T2

A T2 track shall contain five Search Field Zones.

The first Search Field Zone, of 800 Channel Bits in length, shall precede the first Information Block and shall contain the sequence of the Search Field Data Zone, 80 ONEs Channel Bits, the Search Field Data Zone and 160 ONEs Channel Bits.

The second Search Field Zone, of 360 Channel Bits in length, shall follow the fourth Information Block and shall contain the sequence of 80 ONEs Channel Bits and the Search Field Data Zone.

The third Search Field Zone, of 800 Channel Bits in length, shall precede the fifth Information Block and shall contain the sequence of the Search Field Data Zone, 80 ONEs Channel Bits, the Search Field Data Zone and 160 ONEs Channel Bits.

Copyright International Organization for Standardization
Provided by IHS under license with ISO
No reproduction or networking permitted without license from IHS
Not for Resale

The fourth Search Field Zone, of 360 Channel Bits in length, shall follow the eighth Information Block and shall contain the sequence of 80 ONEs Channel Bits and the Search Field Data Zone.

The fifth Search Field Zone, of 640 Channel Bits in length, shall precede the Postamble and shall contain the sequence of the Search Field Data Zone, 80 ONEs Channel Bits and the Search Field Data Zone.

12.6 Servo Zone

The Servo Zones are used for the proper positioning of the head relative to the recorded track. Only T2 tracks shall contain Servo Zones. There shall be three Servo Zones contained in a T2 track.

12.6.1 Servo Zone 1

The first Servo Zone shall follow the preamble and shall contain the sequence of 797 ONEs Channel Bits, 356 µm (equivalent to 797 Channel Bits) recorded with 745,33 ftpmm and 957 ONEs Channel Bits.

12.6.2 Servo Zone 2

The second Servo Zone shall follow the second Search Field Zone and shall contain the sequence of 957 ONEs Channel Bits, 356 µm (equivalent to 797 Channel Bits) recorded with 745,33 ftpmm and 957 ONEs Channel Bits.

12.6.3 Servo Zone 3

The third Servo Zone shall follow the fourth Search Field Zone and shall contain the sequence of 957 ONEs Channel Bits, 356 µm (equivalent to 797 Channel Bits) recorded with 745,33 ftpmm and 957 ONEs Channel Bits.

12.7 Information Tracks

There are five types of Information Tracks.

- Format Tracks
- Data Tracks
- Long Tape Mark Tracks
- Gap Tracks
- End of Data Tracks

12.7.1 Format Track

A Format Track shall contain Format Blocks (see 15.4.3). The first Format Block of the first Format Track shall contain a Physical Block ID Number of zero. Physical Block ID Numbers shall be assigned in ascending order to all blocks in every track as described in 15.1. The end of the LBOT area is at the conclusion of the 320th Format Track. The eighth block of the 320th Format Track shall contain a Physical Block ID Number of 2 559 {2 559=(320x8)-1}.

12.7.2 Data Track

A Data Track shall contain Data Blocks and/or Gap Blocks and/or Short Tape Mark Blocks (see 15.4.1, 15.4.2, 15.4.4).

12.7.3 Long Tape Mark Track

A Long Tape Mark Track shall contain Long Tape Mark Blocks (see 15.4.4).

12.7.4 Gap Track

All blocks in a Gap Track shall be Gap Blocks (see 15.4.2). Gap Tracks may, with the following exceptions, occur anywhere and in any quantity:

a) Gap Tracks shall not occur in the LBOT area.

b) Gap Tracks shall not occur between the Long Tape Mark Tracks of a single Long Tape Mark.

c) Gap Tracks shall not occur between EOD Tracks.

12.7.5 End of Data Track

An End of Data Track shall contain End Of Data Blocks as described in 15.4.5.

Copyright International Organization for Standardization
Provided by IHS under license with ISO
No reproduction or networking permitted without license from IHS
Not for Resale

13 Tape Mark

There are two types of Tape Marks that may be used to delimit groups of recorded User Data.

13.1 Long Tape Mark

A Long Tape Mark shall consist of two Gap Tracks, two Long Tape Mark Tracks and two Gap Tracks. A Long Tape Mark shall start on a T1 physical track.

Except for the Physical Block ID, the ID Information (see 15.4.4) shall be the same for all blocks of the two Long File Mark Tracks of a Long File Mark.

13.2 Short Tape Mark

A Short Tape Mark shall comprise one Physical block.

NOTE - A Short Tape Mark may be rewritten (see clause 16). A Short Tape Mark Block may precede rewrites of Data Blocks or subsequent Data Blocks may precede a rewrite of a Short Tape Mark.

14 End of Data

The End of Data on this tape shall be indicated by the sequence of two Gap Tracks followed by 600 End of Data Tracks. End of Data shall begin on track T1.

When appending data, the End of Data Tracks shall be overwritten.

15 ID Information

Each of the 8 Information Blocks of a track contains 14 bytes of ID Information. These bytes are supplied and used by the tape sub-system for management of the tape sub-system. Within the Information Matrix field, Rows 00 to Row 13, all within Column 00 shall contain information pertaining to the Logical and Physical partitioning of User Data Blocks, Block Type, Start/End Logical Record Flags, and other subsystem control information.

15.1 Physical Block ID

The Physical Block ID is a count, starting with 0, that shall be incremented by one for each block recorded on this tape. Bit 7 of Byte 7 and Bytes 11 to 13 shall express this 25-bit count in the ID Information of all block types. Bit 0 of Byte 13 shall be the least significant bit of this 25-bit count. The Physical Block ID for the first Physical Block following the LBOT area shall be 2 560.

15.2 Logical Block ID

The Logical Block ID is a count, starting with 0, that shall be incremented by one for each Data Block, Long Tape Mark, Short Tape Mark Block or End of Data recorded from LBOT. Bit 4 of Byte 0 and Bytes 1 to 3 shall express this 25-bit count in the ID Information of a Data Block, of a Long Tape Mark Block, of a Short Tape Mark Block or of an End of Data Block. Bit 0 of Byte 3 shall be the least significant bit of this 25-bit count.

This count shall not be incremented for, and shall not be changed in, a rewritten Data Block or a rewritten Short Tape Mark Block.

15.3 Logical Record ID

The Logical Record ID is a count, starting with 0, that shall be incremented by one for each Logical Record, Long Tape Mark or Short Tape Mark written on this tape from LBOT. Bits 0 to 6 of Byte 7 and Bytes 8 to 10 shall express this 31-bit count in the ID Information of a Data Block having an even numbered Logical Block ID, of a Long Tape Mark Block, of a Short Tape Mark Block or of an End of Data Block. Bit 0 of Byte 10 is the least significant bit of this 31-bit count.

15.4 Block type

The content of bits 3 to 0 of Byte 0 identify the block type.

Copyright International Organization for Standardization
Provided by IHS under license with ISO
No reproduction or networking permitted without license from IHS
Not for Resale

Bit-- 3 2 1 0

0 0 0 0 Data Block with uncompressed User Data

0 0 0 1 Data Block where the first Logical Record is compressed and the second Logical Record, if present, is not compressed.

0 0 1 0 Data Block where the second Logical Record is compressed and the first Logical Record is not compressed.

0 0 1 1 Data Block where both the first and second Logical Records are compressed.
0 1 0 0 Shall not be used
0 1 0 1 Shall not be used
0 1 1 0 Shall not be used
0 1 1 1 Shall not be used
1 0 0 0 Shall not be used
1 0 0 1 Shall not be used
1 0 1 0 Long Tape Mark Block
1 0 1 1 Short Tape Mark Block
1 1 0 0 Format Block
1 1 0 1 Shall not be used
1 1 1 0 Gap Block
1 1 1 1 End of Data Block

15.4.1 Data Block

Byte 0

Bits 7 and 6 - These bits shall be set to ZEROs.

Bit 5 - This bit shall be set to ONE if this is a rewrite of a previous Physical Block, else it shall be set to ZERO.

Bit 4 and Bytes 1, 2, and 3 - These bits shall express the Logical Block ID as described in 15.2.

Bits 3 to 0 - These bits shall express the Block Type as described in 15.4.

Byte 4

Bit 7 - This bit shall be set to ONE if a second Logical Record is the last Logical Record in this Physical Block, else it shall be set to ZERO.

Bit 6 - This bit shall be set to ONE if a second Logical Record ends in this Physical Block, else it shall be set to ZERO.

Bit 5 - This bit is set to ONE if a Logical Record starts in the first data position, 00/14, in this Physical Block, else it shall be set to ZERO.

Bit 4 - This bit shall be set to ONE if the first Logical Record of this Physical Block ends in this Physical Block, else it shall be set to ZERO.

Bits 3 and 2 and Byte 6 - These bits shall express the 10-bit count of the number of bytes within this Physical Block of the second Logical Record. Bit 0 of Byte 6 shall be the least significant bit of this count. The count includes CRC bytes if bit 7 of Byte 4 in the Format Block is set to a ONE.

Bits 1 and 0 and Byte 5 - These bits shall express the 10-bit count of the number of bytes within this Physical Block of the first Logical Record. Bit 0 of Byte 5 shall be the least significant bit of this count. The count includes the CRC bytes if bit 7 of Byte 4 in the Format Block is set to a ONE.

Byte 7

Bit 7 and Bytes 11, 12, and 13 - These bits shall express the Physical Block ID as described in 15.1.

Copyright International Organization for Standardization
Provided by IHS under license with ISO
No reproduction or networking permitted without license from IHS
Not for Resale

Bits 6 to 0 - If this Data Block has an even numbered Logical Block ID, the contents shall be as defined in 15.3. If this Data Block has an odd numbered Logical Block ID these bits shall be set to ZEROs.

Bytes 8 to 10

If this Data Block has an even numbered Logical Block ID, the contents shall be as defined in 15.3. If this Data Block has an odd numbered Logical Block ID these bytes shall express the 3-byte count, starting with 0, of the number of the next Tape Mark on this tape. Bit 0 of Byte 10 is the least significant bit of this count.

15.4.2 Gap Block

Byte 0

Bits 7 to 4 - These bits shall be set to ZEROs.

Bits 3 to 0 - These bits express the Block type as described in 15.4.

Bytes 1 to 4

These bytes shall express the four-byte count, starting with 0, of the next Logical Record ID on this tape.

Bytes 5 and 6

These bytes shall be set to ZEROs.

Byte 7

Bit 7 and Bytes 11, 12, and 13 - These bits shall express the Physical Block ID as described in 15.1.

Bits 6 to 0 and Bytes 8 to 10 - These bits shall be set to ZEROs.

15.4.3 Format Block

Byte 0

Bits 7 to 4 - These bits shall be set to ZEROs.

Bits 3 to 0 - These bits shall express the Block type as described in 15.4.

Bytes 1 to 3

These bytes shall be set to ZEROs.

Byte 4

Bit 7 - This bit shall be set to ONE on tapes that have two CRC bytes calculated for and appended to each Logical Record on this tape, else it shall be set to ZERO (see 9.2.1.1.2).

Bit 6 - This bit shall be set to ONE on tapes with rewrites of Information Blocks disallowed, else it shall be set to ZERO.

Bits 5 to 0 and Byte 5 - These bits shall be set to ZEROs.

Byte 6

This byte identifies the registered Processing Algorithm (see 3) applied by the tape sub-system to Logical Records. All ZEROs indicates that no data compression was applied.

Byte 7

Bit 7 and Bytes 11, 12, and 13 - These bits shall express the Physical Block ID as described in 15.1.

Bits 6 to 0 and Bytes 8 to 10 - These bits shall be set to ZEROs.

Copyright International Organization for Standardization
Provided by IHS under license with ISO
No reproduction or networking permitted without license from IHS
Not for Resale

15.4.4 Long/Short Tape Mark Block

Byte 0

Bits 7 and 6 - These bits shall be set to ZEROs.

Bit 5 - This bit shall be set to ONE if this is a rewrite of a Short Tape Mark Block, else it shall be set to ZERO.

Bit 4 and Bytes 1, 2, and 3 - These bits shall express the Logical Block ID as defined in 15.2.

Bits 3 to 0 - These bits shall express the Block type as described in 15.4.

Bytes 4 to 6

These bytes shall contain the count, starting with 0, of this Tape Mark on this tape from LBOT. Bit 0 of Byte 6 is the least significant bit of this count.

Byte 7

Bit 7 and Bytes 11, 12, and 13 - Shall express the Physical Block ID as defined in 15.1.

Bits 6 to 0 and Bytes 8 to 10 - Shall express the Logical Record ID as defined in 15.3.

15.4.5 End of Data Block

Byte 0

Bits 7 to 5 - These bits shall be set to ZEROs.

Bit 4 and Bytes 1, 2, and 3 - Shall express the Logical Block ID as defined in 15.2.

Bits 3 to 0 - Shall express the Block type as defined in 15.4.

Bytes 4 to 6

These bytes contain the count plus one, starting with 0, of the Tape Marks on this tape from LBOT. Bit 0 of Byte 6 is the least significant bit of this count.

Byte 7

Bit 7 and Bytes 11, 12, and 13 - Shall express the Physical Block ID as defined in 15.1.

Bits 6 to 0 and Bytes 8 to 10 - Shall express the Logical Record ID as defined in 15.3.

16 Rewritten Information Blocks

Only a Data Block or a Short Tape Mark Block may be rewritten. When a Data Block or a Short Tape Mark Block is rewritten, the ID Information of the rewritten block shall be identical to the original block, with the exception of the rewrite flag (Byte 0, bit 5) and the Physical Block ID count (see 15.1) which represents the actual location of the rewritten block. If Physical Block n requires a rewrite, it shall be rewritten at Physical Block n+27. The maximum displacement of a rewritten Information Block from its initial location shall be 297 Physical Blocks. To ensure recorded data reliability, the quality of recorded blocks shall be such that no more than 2 segments of any recorded block contain missing pulse zones.

Copyright International Organization for Standardization
Provided by IHS under license with ISO
No reproduction or networking permitted without license from IHS
Not for Resale

17 Physical Tape Format

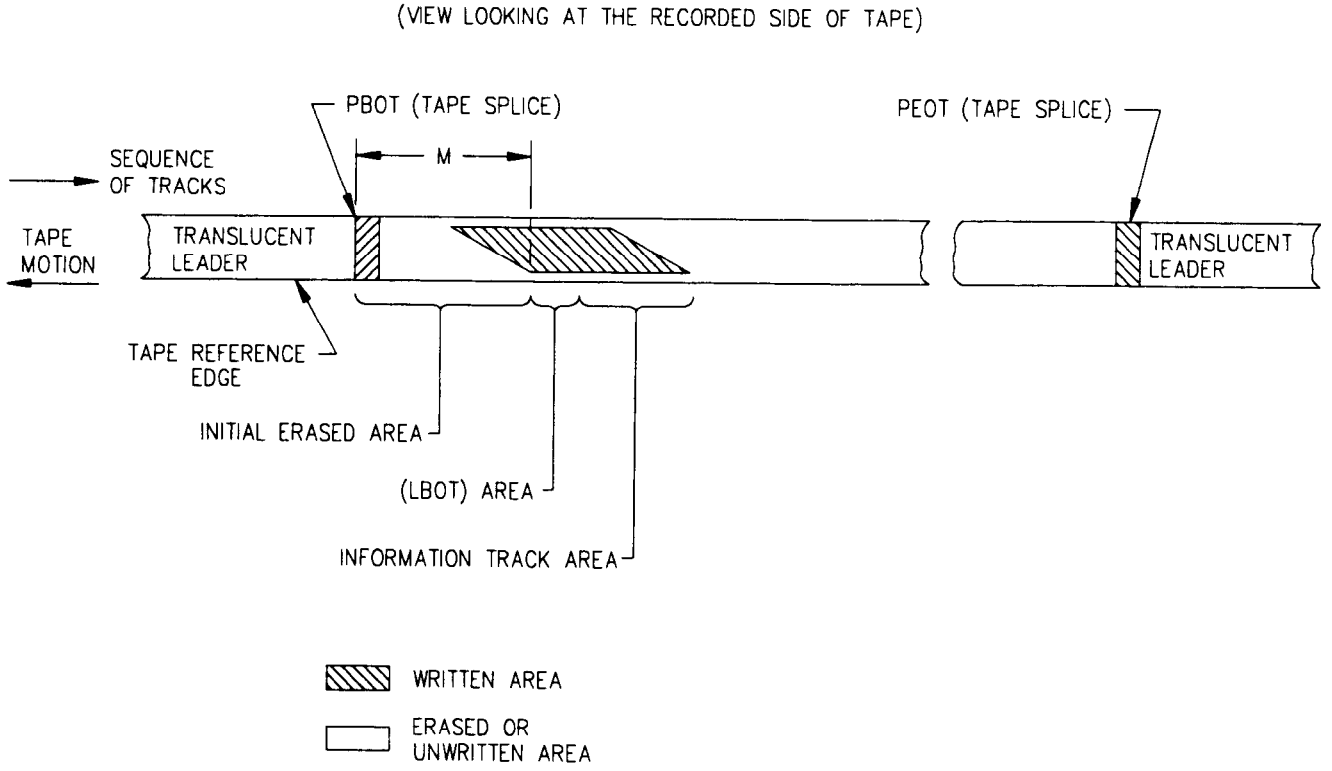

Figure 28 - Physical Tape Layout

17.1 Initial Erased Area

The Initial Erased Area shall commence with PBOT and extend for a distance M along the tape of 725,0 mm minimum and 745,0 mm max. It is terminated by the beginning of the LBOT Area.

17.2 Logical Beginning of Tape Area (LBOT Area)

The LBOT Area shall consist of 320 Format Tracks.

17.3 Usable area of the tape

The area of the tape on which data may be recorded commences with the end of the LBOT Area and ends at a minimum of 13 mm prior to PEOT.

Copyright International Organization for Standardization
Provided by IHS under license with ISO
No reproduction or networking permitted without license from IHS
Not for Resale

Annex A
(normative)

Measurement of light transmittance of tape and leaders

A.1 Introduction

The following description outlines the general principle of the measuring equipment and measuring method to be applied when measuring the light transmittance of tape.

For the purpose of this International Standard "light transmittance" is defined by convention as the relationship between the reading obtained from the measuring equipment with the test piece inserted and the reading obtained when no test piece is present. The transmittance value is expressed as the percentage ratio of the two readings.

A.2 Description of the measuring equipment

The equipment shall comprise

- the radiation source;
- the radiation receiver;
- the measuring mask;
- the optical path;
- the measuring circuitry.

A.2.1 Radiation source

An infra-red light-emitting diode (LED) with the following parameters shall be used:

wavelength at peak emission : 850 nm ± 50 nm

half-power bandwidth : ± 50 nm

A.2.2 Radiation receiver

A flat silicon photo diode shall be used. It shall be operated in the short circuit mode.

A.2.3 Measuring mask

The measuring mask shall have a thickness of 2 mm and a circular aperture of diameter d such that the area is 80 % to 100 % of the active area of the photo diode.

The surface of the mask shall be mat black.

The test piece shall be held firmly against the mask to cover the aperture and to ensure that no ambient light leaks past.

Copyright International Organization for Standardization
Provided by IHS under license with ISO
No reproduction or networking permitted without license from IHS
Not for Resale

A.2.4 Optical path (figure A.1)

The optical path shall be perpendicular to the mask. The distance, l, in millimetres from the emitting surface of the LED to the mask shall be

$$l = \frac{d}{2 \tan \alpha}$$

where α is the angle where the relative intensity of the LED is equal to, or greater than, 95 % of the maximum intensity on the optical axis.

A.2.5 Finish

The whole assembly shall be enclosed in a mat black case.

Measuring Circuitry (figure A.2)

The components of the measuring circuitry are

E: regulated power supply with variable output voltage

R: current-limiting resistor

LED: light-emitting diode

Di: silicon photo diode

A: operational amplifier

R_{f0}, R_{f1}: feedback resistors

S: gain switch

V: voltmeter

The forward current of the LED, and consequently its radiation power, can be varied by means of the power supply E.

Di is operating in the short circuit mode.

The output voltage of the operational amplifier is given by

$V_0 = I_k \times R_f$ where I_k is the short-circuit current of Di.

The output voltage is therefore a linear function of the light intensity.

R_{f0} and R_{f1} shall be low temperature-drift resistors with an accuracy of 1 %.

The following ratio applies:

$$\frac{R_{f0}}{R_{f1}} = \frac{1}{20}$$

A.3 Measuring method

Set switch S to position 0.

With no test piece mounted vary the supply voltage of E until voltmeter V reads full scale (100 %).

Mount a leader or trailer tape on the mask. The reading of the voltmeter shall be in the range 60 % to 100 %.

Copyright International Organization for Standardization
Provided by IHS under license with ISO
No reproduction or networking permitted without license from IHS
Not for Resale

Mount a test piece of magnetic tape on the mask. Set switch S to position 1. Full deflection of the voltmeter now represents a light transmittance of 5 %.

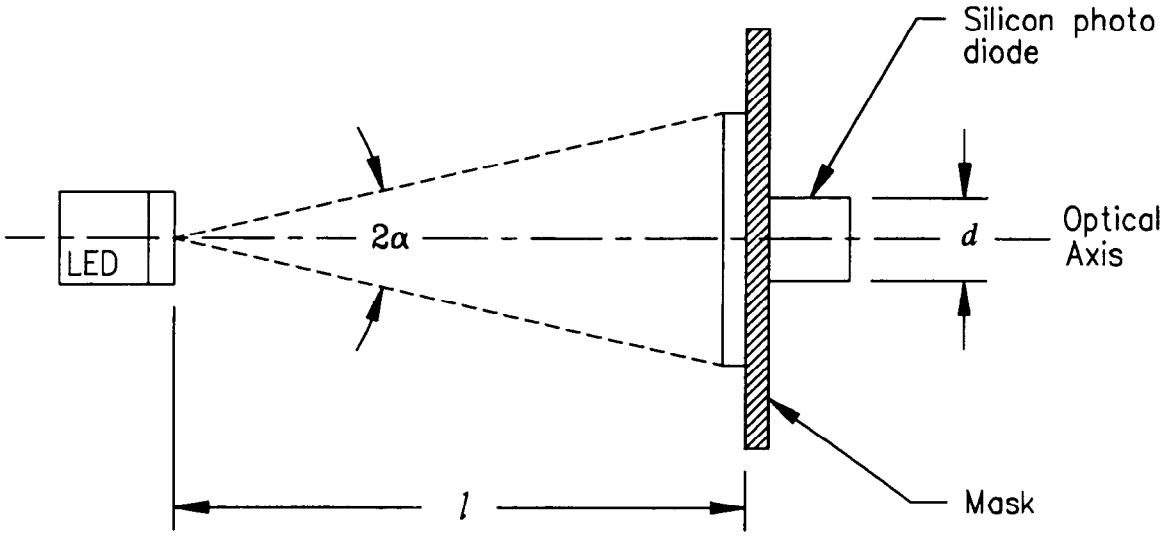

Figure A.1 - Optical arrangement

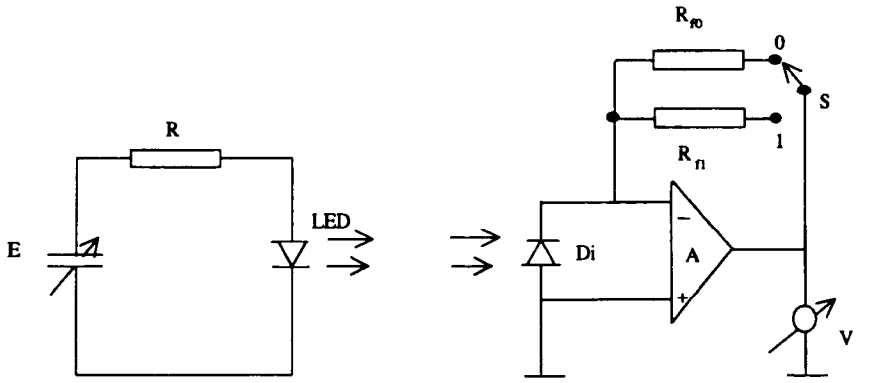

Figure A.2 - Measuring circuitry

Copyright International Organization for Standardization
Provided by IHS under license with ISO
No reproduction or networking permitted without license from IHS
Not for Resale

Annex B
(normative)

Measurement of bit shift

The equipment normally used for recording interchange cartridges shall be used for recording the tape under test.

The tape shall be written in any mode compatible with system operation.

B.1 Read equipment

The tape shall be read on any tape transport which supports a track edge straightness within 5 mm.

There are no absolute requirements on the output voltage from the read head. However, the head design, the rotary transformer, the pre-amplifier, and the head to tape speed shall be chosen to avoid problems from low signal to noise ratios. The frequency response of the head, transformer, pre-amplifier and associated connections shall only be limited at the low end by the transformer and at the high end by the pre-amplifier.

Read head:

head gap length:	0,30 µm ± 0,05 µm
resonant frequency:	≥ 15 times the ONEs frequency
track width:	25 µm ± 3 µm
head gap azimuth:	-10,000° ± 0,133° or +20,000° ± 0,133°

Rotary transformer:

bandwidth:	f_{high}(-3 dB) ≥ 4 times the ONEs frequency
	f_{low}(-3 dB) ≤ 1/400 times the ONEs frequency

Pre-amplifier:

gain:	≥ 100
input noise	≤ 2 nV/√ Hz
bandwidth:	f_{high} (-3dB) ≥ 3 times the ONEs frequency
	f_{low}(-3dB) ≤ 1/400 times the ONEs frequency

Read filters:

Low pass filter:

The low pass filter shall have at least a third order Butterworth response with a cutoff frequency equal to two times the ONEs frequency.

High pass filter:

The high pass filter shall have at least two dominant poles located at 1/40 of the ONEs frequency, with a $Q = 0,7$. (All other a.c. coupling poles shall be located at 1/800 of the ONEs frequency).

Copyright International Organization for Standardization
Provided by IHS under license with ISO
No reproduction or networking permitted without license from IHS
Not for Resale

The transfer function of the equalizer shall be

$$G(S) = \frac{K(S + \omega_z)(S - \omega_z)}{(S + \omega_p)(S^2 + (\omega_0 / Q)S + \omega_0^2)}$$

where

$K \geq 1$

$\omega_i = 2\pi f_i$

f_z = 1/4 of the ONEs frequency

f_p = 1/40 of the ONEs frequency

f_0 = 2 times the ONEs frequency

Q = 0,7

B.2 Measurement

The average bit cell length L is obtained from any two reference zero crossings (RZC) located on either side of the test zero crossing (TZC). A reference zero crossing is a ONE zero crossing with at least two adjacent ONE zero crossings on each side. The RZCs shall not be more than 40 bit cells apart in order to keep the maximum error due to the rate of change below 2 %. The requirement for bit shift specified in 10.2 shall be met when any User Data has been recorded as specified in clauses 9 to 17.

B.3 Data analysis

Where

RZC is a reference zero crossing

TZC is the test zero crossing

P_n is the position of the nth ONEs zero crossing

If n is the number of bit cells between reference zero crossings, the average bit cell length is

$$L = \frac{P_3 - P_1}{n}$$

If there are m bit intervals between the first reference zero crossing and the test zero crossing, then:

$$\text{Bit shift} = \frac{\left| mL - (P_2 - P_1) \right|}{L} \times 100\%$$

Copyright International Organization for Standardization
Provided by IHS under license with ISO
No reproduction or networking permitted without license from IHS
Not for Resale

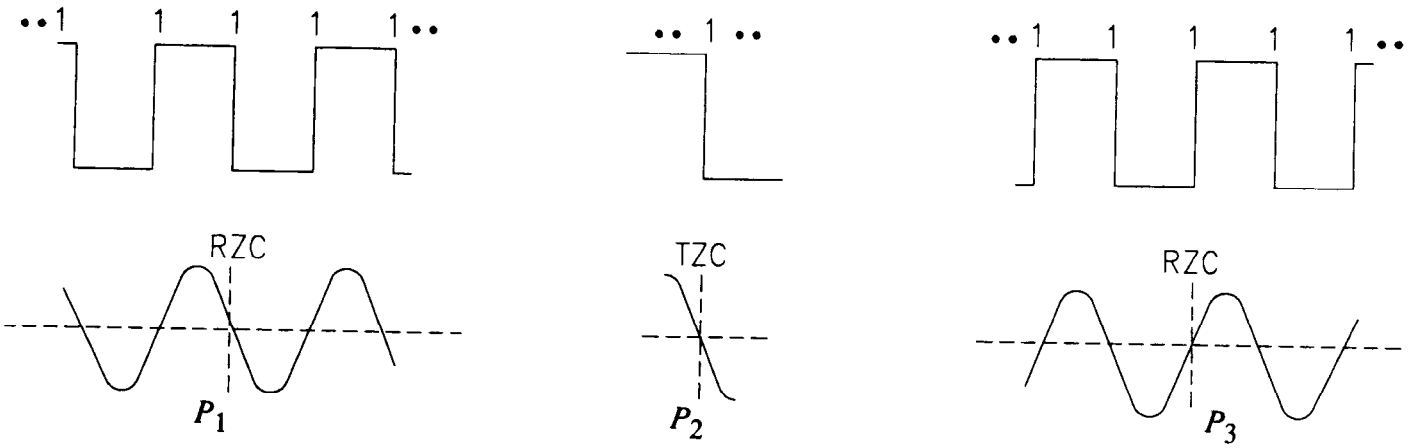

Figure B.1 - Measurement of waveform

Copyright International Organization for Standardization
Provided by IHS under license with ISO
No reproduction or networking permitted without license from IHS
Not for Resale

Annex C
(normative)

Representation of 8-bit bytes by 10-bit patterns

The 8-bit bytes are represented with the most-significant bit to the left and the least significant bit to the right. The 10-bit patterns are represented with the bit recorded first to the left and the bit recorded last to the right. The left-hand column indicates the hexadecimal notation of the 8-bit byte for ease of search.

Hex	8-bit Bytes	10-bit Patterns	Hex	8-bit Bytes	10-bit Patterns
00	00000000	0100100101	24	00100100	0111010101
01	00000001	0100100111	25	00100101	0111010111
02	00000010	0100101010	26	00100110	0111011010
03	00000011	0100101101	27	00100111	0111011101
04	00000100	0100101111	28	00101000	0111101001
05	00000101	0100111001	29	00101001	0111101011
06	00000110	0100111011	2A	00101010	0111101110
07	00000111	0100111110	2B	00101011	0111110010
08	00001000	0101001001	2C	00101100	0111110101
09	00001001	0101001011	2D	00101101	0111110111
0A	00001010	0101001110	2E	00101110	0111111010
0B	00001011	0101010010	2F	00101111	0111111101
0C	00001100	0101010101	30	00110000	1001110011
0D	00001101	0101010111	31	00110001	1001110110
0E	00001110	0101011010	32	00110010	1001001010
0F	00001111	0101011101	33	00110011	1001001101
10	00010000	0101101001	34	00110100	1001001111
11	00010001	0101101011	35	00110101	1001011001
12	00010010	0101101110	36	00110110	1001011011
13	00010011	0101110010	37	00110111	1001011110
14	00010100	0101110101	38	00111000	0110010011
15	00010101	0101110111	39	00111001	0110010110
16	00010110	0101111010	3A	00111010	1010011111
17	00010111	0101111101	3B	00111011	1010010010
18	00011000	0110100101	3C	00111100	1010010101
19	00011001	0110100111	3D	00111101	1010010111
1A	00011010	0110101010	3E	00111110	1010011010
1B	00011011	0110101101	3F	00111111	1010011101
1C	00011100	0110101111	40	01000000	1010101001
1D	00011101	0110111001	41	01000001	1010101011
1E	00011110	0110111011	42	01000010	1010101110
1F	00011111	0110111110	43	01000011	1010110010
20	00100000	0111001001	44	01000100	1010110101
21	00100001	0111001011	45	01000101	1010110111
22	00100010	0111001110	46	01000110	1010111010
23	00100011	0111010010	47	01000111	1010111101

--`,,```,,,,````-`-`,,`,,`,`,,`---
Copyright International Organization for Standardization
Provided by IHS under license with ISO
No reproduction or networking permitted without license from IHS
Not for Resale

Hex	8-bit Bytes	10-bit Patterns	Hex	8-bit Bytes	10-bit Patterns
48	01001000	1011100101	78	01111000	1111101001
49	01001001	1011100111	79	01111001	1111101011
4A	01001010	1011101010	7A	01111010	1111101110
4B	01001011	1011101101	7B	01111011	1111110010
4C	01001100	1011101111	7C	01111100	1111110101
4D	01001101	1011111001	7D	01111101	1111110111
4E	01001110	1011111011	7E	01111110	1111111010
4F	01001111	1011111110	7F	01111111	1111111101
50	01010000	1100100101	80	10000000	0100101011
51	01010001	1100100111	81	10000001	0100101110
52	01010010	1100101010	82	10000010	0100110101
53	01010011	1100101101	83	10000011	0100111010
54	01010100	1100101111	84	10000100	0101101010
55	01010101	1100111001	85	10000101	0101101111
56	01010110	1100111011	86	10000110	0101111011
57	01010111	1100111110	87	10000111	0101111110
58	01011000	1101001001	88	10001000	0111001010
59	01011001	1101001011	89	10001001	0111001111
5A	01011010	1101001110	8A	10001010	0111011011
5B	01011011	1101010010	8B	10001011	0111011110
5C	01011100	1101010101	8C	10001100	1001001011
5D	01011101	1101010111	8D	10001101	1001001110
5E	01011110	1101011010	8E	10001110	1001010101
5F	01011111	1101011101	8F	10001111	1001011010
60	01100000	1101101001	90	10010000	1001101001
61	01100001	1101101011	91	10010001	1001110010
62	01100010	1101101110	92	10010010	1001110111
63	01100011	1101110010	93	10010011	1001111101
64	01100100	1101110101	94	10010100	1010101010
65	01100101	1101110111	95	10010101	1010101111
66	01100110	1101111010	96	10010110	1010111011
67	01100111	1101111101	97	10010111	1010111110
68	01101000	1110100101	98	10011000	1011001001
69	01101001	1110100111	99	10011001	1011010010
6A	01101010	1110101010	9A	10011010	1011010111
6B	01101011	1110101101	9B	10011011	1011011101
6C	01101100	1110101111	9C	10011100	1011101011
6D	01101101	1110111001	9D	10011101	1011101110
6E	01101110	1110111011	9E	10011110	1011110101
6F	01101111	1110111110	9F	10011111	1011111010
70	01110000	1111001001	A0	10100000	1101001010
71	01110001	1111001011	A1	10100001	1101001111
72	01110010	1111001110	A2	10100010	1101011011
73	01110011	1111010010	A3	10100011	1101011110
74	01110100	1111010101	A4	10100100	1010100101
75	01110101	1111010111	A5	10100101	1110010010
76	01110110	1111011010	A6	10100110	1110010111
77	01110111	1111011101	A7	10100111	1110011101

Copyright International Organization for Standardization
Provided by IHS under license with ISO
No reproduction or networking permitted without license from IHS
Not for Resale

Hex	8-bit Bytes	10-bit Patterns	Hex	8-bit Bytes	10-bit Patterns
A8	10101000	1110101011	D4	11010100	1101100111
A9	10101001	1110101110	D5	11010101	1101101101
AA	10101010	1110110101	D6	11010110	1101111001
AB	10101011	1110111010	D7	11010111	1101111111
AC	10101100	1111100101	D8	11011000	1111001101
AD	10101101	1111101010	D9	11011001	1110010011
AE	10101110	1111101111	DA	11011010	1110010110
AF	10101111	1111111011	DB	11011011	1111011001
B0	10110000	0100111111	DC	11011100	0101011111
B1	10110001	1001011111	DD	11011101	0111011111
B2	10110010	1011111111	DE	11011110	1010111111
B3	10110011	1110111111	DF	11011111	1101011111
B4	10110100	0101100101	E0	11100000	0111101010
B5	10110101	0110100110	E1	11100001	0111101111
B6	10110110	1111010011	E2	11100010	0111111011
B7	10110111	1111010110	E3	11100011	0111111110
B8	10111000	0101010011	E4	11100100	1101101010
B9	10111001	0111110011	E5	11100101	1101101111
BA	10111010	1010010011	E6	11100110	1101111011
BB	10111011	1101110011	E7	11100111	1101111110
BC	10111100	0101010110	E8	11101000	1111001111
BD	10111101	0111110110	E9	11101001	1111011011
BE	10111110	1010010110	EA	11101010	1111011110
BF	10111111	1101110110	EB	11101011	1100111111
C0	11000000	0101001101	EC	11101100	0110101110
C1	11000001	1011010011	ED	11101101	1111110011
C2	11000010	1011010110	EE	11101110	1111110110
C3	11000011	0101011001	EF	11101111	0110111111
C4	11000100	0110010101	F0	11110000	1010101101
C5	11000101	1010011001	F1	11110001	0111010110
C6	11000110	0110011010	F2	11110010	0101011110
C7	11000111	0110011111	F3	11110011	1001111111
C8	11001000	0110101001	F4	11110100	1011010101
C9	11001001	0110110010	F5	11110101	1011110111
CA	11001010	0110110111	F6	11110110	1011111101
CB	11001011	0110111101	F7	11110111	1011011111
CC	11001100	0111100111	F8	11111000	1100100110
CD	11001101	0111101101	F9	11111001	1110110111
CE	11001110	0111111001	FA	11111010	1110111101
CF	11001111	0101111111	FB	11111011	1110011111
D0	11010000	1100101001	FC	11111100	1111100111
D1	11010001	1100110010	FD	11111101	1111101101
D2	11010010	1100110111	FE	11111110	1111111001
D3	11010011	1100111101	FF	11111111	1111011111

Copyright International Organization for Standardization
Provided by IHS under license with ISO
No reproduction or networking permitted without license from IHS
Not for Resale

Annex D
(informative)

Recommendations for transportation

D.1 Environment

It is recommended that during transportation the cartridges are kept within the following conditions:

temperature:	-40° C to 45° C
relative humidity:	5 % to 80 %
wet bulb temperature:	26° C max.

There should be no condensation in or on the cartridge.

D.2 Hazards

Transportation of tape cartridges involves three basic potential hazards.

D.2.1 Impact loads and vibrations

The following recommendations should minimize damage to tape cartridges during transportation:

Avoid mechanical loads that would distort the cartridge shape.

Avoid dropping the cartridge more than 1 m.

Cartridges should be fitted into a rigid box containing adequate shock-absorbent material.

The final box should have a clean interior and a construction that provides sealing to prevent the ingress of dirt and water.

The orientation of the cartridges inside the final box should be such that the axes of the tape reels are horizontal.

The final box should be clearly marked to indicate its correct orientation.

D.2.2 Extremes of temperature and humidity

Extreme changes in temperature and humidity should be avoided whenever possible. Whenever a cartridge is received it should be conditioned in the operating environment for a period of at least 24 h.

D.2.3 Effects of stray magnetic fields

A nominal spacing of not less than 80 mm should exist between the cartridge and the outer surface of the shipping container to minimize the risk of corruption.

Copyright International Organization for Standardization
Provided by IHS under license with ISO
No reproduction or networking permitted without license from IHS
Not for Resale

Annex E
(informative)

Inhibitor tape

Any tape that degrades the performance of the tape drive or other tapes is called an inhibitor tape. Certain tape characteristics can contribute to poor tape drive performance. Tapes that exhibit these characteristics may not give satisfactory performance, can result in excessive errors and can interfere with the subsequent performances of other tapes.

E.1 Inhibitor characteristics

These characteristics include:

- high abrasivity;
- high friction to tape path components;
- poor edge conditions;
- excessive tape wear residual products;
- electrostatic charge build-up on the tape or tape path components;
- interlayer slippage;
- transfer of recording surface coating to the back of the next tape layer;
- separation of tape constituents causing deposits that may lead to tape sticking or poor performance of other tapes.

Tapes to be used in this cartridge should not be inhibitor tapes.

Copyright International Organization for Standardization
Provided by IHS under license with ISO
No reproduction or networking permitted without license from IHS
Not for Resale

UDC 681.327.636

Descriptors: data processing, information interchange, data recording, magnetic recording, data storage devices, magnetic tapes, 8 mm magnetic tapes, magnetic tape cartridges, specifications, dimensions, physical properties, magnetic properties, track formats.

Price based on 65 pages

Copyright International Organization for Standardization
Provided by IHS under license with ISO
No reproduction or networking permitted without license from IHS

Not for Resale