INTERNATIONAL STANDARD

ISO/IEC 11976

First edition
2008-12-15

Information technology — Data interchange on 130 mm rewritable and write-once-read-many ultra density optical (UDO) disk cartridges — Capacity: 60 Gbytes per cartridge — Second generation

Échange de données sur cartouches de disque optique ultradense (UDO) de 130 mm «réinscriptible» ou «à écriture unique» — Capacité: 60 Gbytes par cartouche — Deuxième génération

Reference number
ISO/IEC 11976:2008(E)

© ISO/IEC 2008

Copyright International Organization for Standardization
Provided by IHS under license with ISO
No reproduction or networking permitted without license from IHS

Not for Resale

PDF disclaimer

This PDF file may contain embedded typefaces. In accordance with Adobe's licensing policy, this file may be printed or viewed but shall not be edited unless the typefaces which are embedded are licensed to and installed on the computer performing the editing. In downloading this file, parties accept therein the responsibility of not infringing Adobe's licensing policy. The ISO Central Secretariat accepts no liability in this area.

Adobe is a trademark of Adobe Systems Incorporated.

Details of the software products used to create this PDF file can be found in the General Info relative to the file; the PDF-creation parameters were optimized for printing. Every care has been taken to ensure that the file is suitable for use by ISO member bodies. In the unlikely event that a problem relating to it is found, please inform the Central Secretariat at the address given below.



COPYRIGHT PROTECTED DOCUMENT

© ISO/IEC 2008

All rights reserved. Unless otherwise specified, no part of this publication may be reproduced or utilized in any form or by any means, electronic or mechanical, including photocopying and microfilm, without permission in writing from either ISO at the address below or ISO's member body in the country of the requester.

ISO copyright office
Case postale 56 • CH-1211 Geneva 20
Tel. + 41 22 749 01 11
Fax + 41 22 749 09 47
E-mail copyright@iso.org
Web www.iso.org

Published in Switzerland

Copyright International Organization for Standardization
Provided by IHS under license with ISO
No reproduction or networking permitted without license from IHS

© ISO/IEC 2008 – All rights reserved

Not for Resale

Contents

Page

Foreword viii

Introduction ix

Section 1 — General 1

1 Scope 1

2 Conformance 2
2.1 Optical disk 2
2.2 Generating system 2
2.3 Receiving system 2
2.4 Compatibility statement 2

3 Normative references 2

4 Terms and definitions 2

5 Conventions and notations 5
5.1 Representation of numbers 5
5.2 Names 6

6 Abbreviated terms 6

7 General description 7

8 General requirement 8
8.1 Environments 8
8.1.1 Test environment 8
8.1.2 Operating environment 8
8.1.3 Storage environment 9
8.1.4 Transportation 9
8.2 Temperature shock 9
8.3 Safety requirements 9
8.4 Flammability 9

9 Reference Drive 9
9.1 Optical system 9
9.2 Optical beam 10
9.3 Tracking 11
9.4 Read Channel 11
9.5 Rotation of the disk 12

Section 2 — Mechanical and physical characteristics 13

10 Dimensional and physical characteristics of the case 13
10.1 General description of the case 13
10.2 Relationship of Sides A and B 13
10.3 Reference axes and case reference planes 13
10.4 Case drawings 13
10.5 Dimensions of the case 14
10.5.1 Overall dimensions 14
10.5.2 Location hole 15
10.5.3 Alignment hole 15
10.5.4 Surfaces on Case Reference Planes P 15
10.5.5 Insertion slots and detent features 16
10.5.6 Gripper slots 17
10.5.7 Write-inhibit holes 18
10.5.8 Media identification sensor holes 18

© ISO/IEC 2008 – All rights reserved

Copyright International Organization for Standardization
Provided by IHS under license with ISO
No reproduction or networking permitted without license from IHS
Not for Resale

10.5.9 Head and motor window 19
10.5.10 Shutters 19
10.5.11 Slots for shutter opener 20
10.5.12 Slots to prevent insertion into a MO-drive 20
10.5.13 User label areas 21
10.6 Mechanical characteristics 21
10.6.1 Materials 21
10.6.2 Mass 21
10.6.3 Edge distortion 21
10.6.4 Compliance 21
10.6.5 Shutter opening force 21
10.7 Drop test 21
10.8 Electro-static discharge test 22

11 Dimensional, mechanical, and physical characteristics of the disk 33
11.1 General description of the disk 33
11.2 Reference axis and plane of the disk 33
11.3 Dimensions of the disk 33
11.3.1 Hub dimensions 33
11.3.2 Cover layer dimensions 35
11.4 Mechanical characteristics 36
11.4.1 Material 36
11.4.2 Mass 36
11.4.3 Moment of inertia 36
11.4.4 Imbalance 36
11.4.5 Axial deflection 36
11.4.6 Axial acceleration 36
11.4.7 Radial runout 37
11.4.8 Radial acceleration 37
11.4.9 Tilt 37
11.4.10 Axial damping 37
11.5 Optical characteristics 37
11.5.1 Index of refraction 37
11.5.2 Thickness 37
11.5.3 Birefringence 38
11.5.4 Reflectance 38

12 Interface between cartridge and drive 38
12.1 Clamping method 38
12.2 Clamping force 39
12.3 Capture cylinder 39
12.4 Disk position in operating condition 39

Section 3 — Format of information 41

13 Physical Track Layout 41
13.1 Groove 41
13.2 Direction of spiral 41
13.3 Groove pitch 41
13.4 Groove wobble 41

14 General Description of the Formatted Area 41
14.1 Division of the Formatted Area 42
14.2 Physical Track / Radial Alignment 42

15 Preformatted Sector format 45
15.1 Physical Block Address (PBA) 45
15.2 Sector layout 45
15.2.1 Zone Number 46
15.2.2 Track Number 47
15.2.3 Sector Number 47
15.2.4 Parity generation 47
15.3 Wobble Amplitude modulation for ADIP (WAMFA) 47

Copyright International Organization for Standardization
Provided by IHS under license with ISO
No reproduction or networking permitted without license from IHS
Not for Resale
© ISO/IEC 2008 – All rights reserved

15.3.1 WAMFA conversion table code 47
15.3.2 WAMFA synchronization 48
15.4 Phase-shifted wobbles 48

16 Sector layout for recorded data 49
16.1 Sector layout for recorded data 49
16.2 Guard fields 51
16.3 Gap and VAP flag 51
16.3.1 Type WORM media 51
16.3.2 Type RW media 52
16.4 Preamble 52
16.5 Sync field 52
16.6 Viterbi Training field (VTF) 52
16.7 Data field 52
16.7.1 Recording Sequence for Data field 53
16.7.2 User Data bytes 53
16.7.3 CRC and ECC bytes 53
16.7.4 Control bytes 53
16.7.5 Resync fields 53
16.7.6 Postamble field (PA) 54
16.8 SPS allocation 54

17 Recording code 54
17.1 RLL(1,7) encoding 54
17.2 RLL(1,7) decoding 55

18 Synchronization of Preformatted and Recorded Sectors 56
18.1 Synchronization of Type WORM media 56
18.2 Synchronization of Type RW media 56

19 Logical Format 56
19.1 Logical Format Layout 56
19.2 Logical Format Layout 61
19.2.1 Lead-in band 61
19.2.2 Manufacturer (MFR) Test bands 61
19.2.3 Read Focus Offset (RFO) bands 61
19.2.4 Write Power Calibration (WPC) bands 61
19.2.5 Specific Disk Information (SDI) Tracks 61
19.2.6 Disk Definition Structure (DDS) bands 62
19.2.7 PDL3 band 62
19.2.8 User bands 63
19.2.9 Lead-out band 63

20 Layout of the User bands 63
20.1 General Description of the User bands 63
20.2 Divisions of the User tracks 63
20.3 User Area 63
20.4 Defect Management Area (DMA) 63
20.4.1 Primary Defect List (PDL) Area 63
20.4.2 Secondary Defect List (SDL) Area 64
20.4.3 SDL Duplicate Pages (SDLDP) Area 64
20.4.4 Primary Spares Area (PSA) 64
20.4.5 Secondary Spares Area (SSA) 64
20.5 Disk Definition Structure (DDS) 65
20.6 Rewritable (RW) Zone 67
20.7 Write Once Read Many (WORM) Zone 67

21 Defect Management Area (DMA) 67
21.1 Initialization of the disk 67
21.2 Certification 67
21.2.1 Slipping Algorithm 67
21.2.2 Linear Replacement Algorithm 68
21.3 Write procedure 68

© ISO/IEC 2008 All rights reserved

Copyright International Organization for Standardization
Provided by IHS under license with ISO
No reproduction or networking permitted without license from IHS
Not for Resale

21.4 Primary Defect List (PDL) 69
21.5 Secondary Defect List (SDL) 70

Section 4 — Characteristics of embossed information 71

22 Method of testing 71
22.1 Environment 71
22.2 Use of the Reference Drive 71
22.2.1 Optics and mechanics 71
22.2.2 Read power 72
22.2.3 Read Channel 72
22.2.4 Tracking 72
22.2.5 Axial focus offset optimization 72
22.3 Definition of signals 72

23 Signals from grooves 73
23.1 Ratio of SUM max and SUM min signals on groove 73
23.2 Normalized tracking error signal 73
23.3 Normalized wobble signal 73
23.4 Phase depth 73
23.5 ADIP error rate 73

Section 5 — Characteristics of the recording layer 74

24 Method of testing 74
24.1 Environment 74
24.2 Reference Drive 74
24.2.1 Optics and mechanics 74
24.2.2 Read power 74
24.2.3 Read Channel 74
24.2.4 Tracking 74
24.3 Write conditions 75
24.3.1 Write pulse and power waveform 75
24.3.2 Write pulse power and pulse timing determination 75
24.4 Erase power for Type RW media 75
24.4.1 Erase power determination 75

25 Write characteristics 75
25.1 Mark polarity 75
25.2 Resolution 76
25.3 Narrow-Band Signal-to-Noise Ratio 76
25.4 VTE 77
25.5 Rewrite cycles for Type RW media 77
25.6 Cross Erase and Crosstalk 77
25.7 Erase ratio 78
25.8 Read power damage 78

Section 6 — Characteristics of user data 78

26 User data – Method of testing 78
26.1 Environment 79
26.2 Reference Drive 79
26.2.1 Optics and mechanics 79
26.2.2 Read power 79
26.2.3 Read Channel 79
26.2.4 Tracking 79
26.2.5 Error correction 79

27 Minimum quality of a Sector 79
27.1 Preformatted data 80
27.2 User-written data 80
27.2.1 Recording field 80
27.2.2 Byte errors 80

28 Data interchange requirements 80

© ISO/IEC 2008 – All rights reserved
Copyright International Organization for Standardization
Provided by IHS under license with ISO
No reproduction or networking permitted without license from IHS
Not for Resale

28.1 Tracking **80**
28.2 User-written data **80**
28.3 Quality of disk **80**

Annex A (normative) **Air cleanliness class 100 000** **81**

Annex B (normative) **Read Channel signal equalization** **83**

Annex C (normative) **Edge distortion test** **86**

Annex D (normative) **Compliance test** **88**

Annex E (normative) **Cartridge electro-static discharge test** **91**

Annex F (normative) **Test method for measuring the adsorbent force of the hub** **92**

Annex G (normative) **Interleave, CRC, ECC for the Data field** **94**

Annex H (normative) **Drive Information Record (DIR) usage** **97**

Annex I (normative) **Specific Disk Information** **99**

Annex J (normative) **CRC Calculation for SDI, DDS, PDL, and SDL Sectors** **113**

Annex K (normative) **Data field scrambler implementation** **115**

Annex L (normative) **Definition of the write pulse shape** **117**

Annex M (normative) **Requirements for interchange** **121**

Annex N (informative) **Office environment** **123**

Annex O (informative) **Derivation of the operating climatic environment** **124**

Annex P (informative) **Transportation** **129**

Annex Q (informative) **Track deviation measurement** **130**

Annex R (informative) **Measurement of the vertical birefringence of the cover layer** **134**

Annex S (informative) **Start Position Shift (SPS) implementation** **135**

Annex T (informative) **Sector retirement guidelines** **136**

Annex U (informative) **Guidelines for the use of Type WORM ODCs** **137**

Annex V (informative) **Laser power calibration for evaluation of media power parameters** **138**

© ISO/IEC 2008 – All rights reserved

Copyright International Organization for Standardization
Provided by IHS under license with ISO
No reproduction or networking permitted without license from IHS
Not for Resale

Foreword

ISO (the International Organization for Standardization) and IEC (the International Electrotechnical Commission) form the specialized system for worldwide standardization. National bodies that are members of ISO or IEC participate in the development of International Standards through technical committees established by the respective organization to deal with particular fields of technical activity. ISO and IEC technical committees collaborate in fields of mutual interest. Other international organizations, governmental and non-governmental, in liaison with ISO and IEC, also take part in the work. In the field of information technology, ISO and IEC have established a joint technical committee, ISO/IEC JTC 1.

International Standards are drafted in accordance with the rules given in the ISO/IEC Directives, Part 2.

The main task of the joint technical committee is to prepare International Standards. Draft International Standards adopted by the joint technical committee are circulated to national bodies for voting. Publication as an International Standard requires approval by at least 75 % of the national bodies casting a vote.

Attention is drawn to the possibility that some of the elements of this document may be the subject of patent rights. ISO and IEC shall not be held responsible for identifying any or all such patent rights.

ISO/IEC 11976 was prepared by Ecma International (as ECMA-380) and was adopted, under a special “fast-track procedure”, by Joint Technical Committee ISO/IEC JTC 1, *Information technology*, in parallel with its approval by national bodies of ISO and IEC.

--`,,```,,,,````-`-`,,`,,`,`,,`---

Copyright International Organization for Standardization
Provided by IHS under license with ISO
No reproduction or networking permitted without license from IHS
© ISO/IEC 2008 – All rights reserved
Not for Resale

Introduction

Ecma Technical Committee TC31 was established in 1984 for the standardization of Optical Disks and Optical Disk Cartridges (ODC). Since its establishment, the Committee has made major contributions to ISO/IEC JTC 1/SC 23 toward the development of International Standards for optical disks with a diameter of 80 mm, 90 mm, 120 mm, 130 mm, 300 mm and 356 mm. Numerous standards have been developed by TC31 and published by Ecma, almost all of which have also been adopted by ISO/IEC under the fast-track procedure as International Standards.

The present Standard is the Second Generation of the UDO Standard initially published (1st Edition) as ECMA-350 in 2003 and as ISO/IEC 17345 in 2005.

--`,,```,,,,````-`-`,,`,,`,`,,`---

© ISO/IEC 2008 – All rights reserved

Copyright International Organization for Standardization
Provided by IHS under license with ISO
No reproduction or networking permitted without license from IHS
Not for Resale

Copyright International Organization for Standardization
Provided by IHS under license with ISO
No reproduction or networking permitted without license from IHS
Not for Resale

Information technology — Data interchange on 130 mm rewritable and write-once-read-many ultra density optical (UDO) disk cartridges — Capacity: 60 Gbytes per cartridge — Second generation

Section 1 — General

1 Scope

This International Standard specifies the mechanical, physical, and optical characteristics of a 130 mm optical disk cartridge (ODC) that employs thermo-optical Phase Change effects to enable data interchange between such disks.

This International Standard specifies two types of disk.

— Type RW (Rewritable) provides for data to be written, read and erased many times over the recording surfaces of the disk.

— Type WORM (Write Once Read Many) provides for data once written to be read a multiplicity of times. This type uses a Write Once Read Many times recording material (written marks cannot be erased and attempted modifications of the written marks are detectable). Multisession (incremental write operations) recording may be performed on Type WORM disks.

The disk is two-sided with a nominal capacity of 30,0 Gbytes per side and the cartridge (two sides) provides a nominal capacity of 60,0 Gbytes.

This International Standard specifies the following:

— the conditions for conformance testing and the Reference Drive;

— the environments in which the cartridges are to be operated and stored;

— the mechanical, physical and dimensional characteristics of the cartridge so as to provide mechanical interchangeability between data processing systems;

— the format of the information on the disk, both embossed and user-written, including the physical disposition of the tracks and sectors, the error correction codes, the modulation methods used;

— the characteristics of the embossed information on the disk;

— the thermo-optical characteristics of the disk, enabling processing systems to write data onto the disk;

— the minimum quality of user-written data on the disk, enabling data processing systems to read data from the disk.

This International Standard provides for interchange between optical disk drives. Together with a standard for volume and file structure, it provides for full data interchange between data processing systems.

© ISO/IEC 2008 – All rights reserved

Copyright International Organization for Standardization
Provided by IHS under license with ISO
No reproduction or networking permitted without license from IHS
Not for Resale

2 Conformance

2.1 Optical disk

An ODC is in conformance with this International Standard if it meets all mandatory requirements specified therein.

A claim of conformance with this International Standard shall specify the Type, RW or WORM, implemented.

2.2 Generating system

A claim of conformance with this International Standard shall specify which Type(s) is (are) supported. A system generating an ODC for interchange is in conformance with this International Standard if it meets the mandatory requirements of this International Standard for the Type(s) supported.

2.3 Receiving system

A claim of conformance with this International Standard shall specify which Type(s) is (are) supported.

A system receiving an ODC for interchange is in conformance with this International Standard if it is able to process any recording made on the cartridge according to 2.1 on the Type(s) specified.

2.4 Compatibility statement

A claim of conformance with this International Standard shall include a statement listing any other Optical Disk Cartridge Standard supported by the system for which conformance is claimed. This statement shall specify the number of the Standard(s), including, where appropriate, the ODC Type(s), and whether support includes reading only or both reading and writing.

3 Normative references

The following referenced documents are indispensable for the application of this document. For dated references, only the edition cited applies. For undated references, the latest edition of the referenced document (including any amendments) applies.

ISO/IEC 28360:2007, *Information technology — Office equipment — Determination of chemical emission rates from electronic equipment*

ECMA-287 (2002), *Safety of electronic equipment*

4 Terms and definitions

For the purposes of this document, the following terms and definitions apply.

4.1
band
an annular group of Physical Tracks

4.2
case
the housing for an optical disk that protects the disk and facilitates disk interchange

4.3
case reference plane
a plane defined for each side of the case, to which the dimensions of the case are referred

© ISO/IEC 2008 – All rights reserved
Copyright International Organization for Standardization
Provided by IHS under license with ISO
No reproduction or networking permitted without license from IHS
Not for Resale

4.4
channel bit
the elements by which, after modulation, the binary values ZERO and ONE are represented by marks and spaces on the disk

4.5
clamping zone
the annular part of the disk within which the clamping force is applied by the clamping device

4.6
cover layer
a transparent layer of the disk through which the optical beam accesses the recording layer

4.7
Cyclic Redundancy Code
CRC
a method for detecting errors in data

4.8
data field
a subdivision of a Sector intended for the recording of user data

4.9
defect management
a method for handling the defective areas on the disk

4.10
disk reference plane
a plane defined by the perfectly flat annular surface of an ideal spindle onto which the Clamping Zone of the disk is clamped, and which is normal to the axis of rotation

4.11
entrance surface
the surface of the disk onto which the optical beam first impinges

4.12
Error Correction Code
ECC
an error-detecting code designed to correct certain kinds of errors in data

4.13
field
a subdivision of a Sector

4.14
format
the arrangement or layout of information on the disk

NOTE The annular area on the disk bearing the format is the Formatted Zone.

4.15
groove
a trench-like feature of the disk, applied before the recording of any information, and used to define the track location

NOTE Recording is performed on the groove.

© ISO/IEC 2008 – All rights reserved

Copyright International Organization for Standardization
Provided by IHS under license with ISO
No reproduction or networking permitted without license from IHS
Not for Resale

4.16
hub
the central feature on the disk, which interacts with the spindle of the disk drive to provide radial centring and the clamping force

4.17
interleaving
the process of allocating the physical sequence of units of data so as to render the data more immune to burst errors

4.18
mark
a feature of the recording layer which takes the form of a pit, change in the reflectivity, or any other type or form that can be sensed by the optical system

NOTE The pattern of marks represents the data on the disk.

4.19
mirror area
an area in which there is no embossed information

4.20
optical disk
a disk that will accept and retain information in the form of marks in a recording layer, which can be read with an optical beam

4.21
Optical Disk Cartridge
ODC
a device consisting of a case containing an optical disk

4.22
phase change
a physical effect by which the area of a recording layer irradiated by a laser beam is heated so as to change from an amorphous state to a crystalline state and vice versa

4.23
Physical Block Address
PBA
a numbering system of the data Sectors defined to constitute a uniquely addressable Sector location to the recording system

4.24
physical track
a quasi revolution (360°) of groove

4.25
read power
the optical power, incident at the entrance surface of the disk, used when reading

4.26
recording layer
a layer of the disk on, or in, which data is written during manufacture and/or use

NOTE The recording layer may actually consist of a multiple layer stack of different materials or composite materials.

4.27
reed-solomon code
an error detection and/or correction code which is particularly suited to the correction of errors which occur in bursts or are strongly correlated

© ISO/IEC 2008 – All rights reserved
Copyright International Organization for Standardization
Provided by IHS under license with ISO
No reproduction or networking permitted without license from IHS
Not for Resale

4.28
sector
the smallest addressable part of a track in the formatted area of the disk

4.29
space
the area between marks along the track

4.30
spindle
the part of the disk drive that contacts the disk and/or hub

4.31
substrate
a layer of the disk provided for mechanical support of the recording layer

4.32
track
a path that is followed by the focus of the optical beam during one quasi revolution of the disk

4.33
track pitch
the distance between centrelines of adjacent grooves, measured in the radial direction

4.34
user area
the area of the disk intended for the recording of user data

4.35
wobble
a periodic radial deviation of the groove from the average centreline that is used as timing and addressing signal

4.36
write-inhibit hole
a hole in the case which, when detected by the drive to be open, inhibits write operations

4.37
zone
an annular area of the disk

5 Conventions and notations

5.1 Representation of numbers

A measured value is rounded off to the least significant digit of the corresponding specified value. For instance, it implies that a specified value of 1,26 with a positive tolerance of + 0,01 and a negative tolerance of - 0,02 allows a range of measured values from 1,235 to 1,275.

Numbers in decimal notations are represented by the digits 0 to 9.

Numbers in hexadecimal notation are represented by the hexadecimal digits 0 to 9 and A to F in parentheses.

The setting of bits is denoted by ZERO and ONE.

Numbers in binary notations and bit patterns are represented by strings of digits 0 and 1, with the most significant bit shown to the left.

--`,,```,,,,````-`-`,,`,,`,`,,`---
© ISO/IEC 2008 – All rights reserved
Copyright International Organization for Standardization
Provided by IHS under license with ISO
No reproduction or networking permitted without license from IHS
Not for Resale

Negative values of numbers in binary notation are given as Two's complement.

In each field the data is recorded so that the most significant byte (MSB), identified as Byte 0, is recorded first and the least significant byte (LSB) last. In a field of 8*n* bits, bit $b_{(8n-1)}$ shall be the most significant bit (msb) and bit b_0 the least significant bit (lsb). Bit $b_{(8n-1)}$ is recorded first.

A binary digit that can be set indifferently to ZERO or to ONE is represented by "x".

5.2 Names

The names of entities, e.g. specific tracks, fields, areas, zones, etc. are given a capital initial.

6 Abbreviated terms

ADIP Address In Pregroove

BER Byte Error Rate

BERC Byte Error Count (per Sector)

CRC Cyclic Redundancy Code

DDS Disk Definition Structure

DIR Drive Information Record

DMA Defect Management Area

DSN Drive Serial Number

ECC Error Correction Code

LBA Logical Block Address

LSB Least Significant Byte

lsb least significant bit

MSB Most Significant Byte

msb most significant bit

NBSNR Narrow-Band Signal-to-Noise Ratio

NRZ Non Return to Zero

ODC Optical Disk Cartridge

PA Postamble

PBA Physical Block Address

PDL Primary Defect List

PLL Phase Locked Loop

PSA Primary Spares Area

--`,,```,,,,````-`-,,`,,`,`,,`---
© ISO/IEC 2008 – All rights reserved
Copyright International Organization for Standardization
Provided by IHS under license with ISO
No reproduction or networking permitted without license from IHS
Not for Resale

RESYNC Re-Synchronization

RFO Read Focus Offset

RLL Run-Length Limited (code)

RW Rewritable

SCSI Small Computer System Interface

SDI Specific Disk Information

SDL Secondary Defect List

SPS Start Position Shift

SSA Secondary Spares Area

SYNC Synchronization

TA Transition Area

UDO Ultra Density Optical (disk)

VAP Verify and Protect

VTE Viterbi Target Error

WAMFA Wobble Amplitude Modulation For ADIP

WORM Write Once Read Many

WPC Write Power Calibration

ZCAV Zoned Constant Angular Velocity

ZCLV Zoned Constant Linear Velocity

ZTS Zone Track and Sector (address information)

7 General description

The optical disk cartridge, which is the subject of this International Standard, consists of a case containing an optical disk.

The case is a protective enclosure for the disk. It has access windows covered by two shutters. One of the windows is automatically uncovered by the drive when the cartridge is inserted into it.

The optical disk is made from two sides that are assembled together. Each side consists of a Phase Change recording layer placed between the substrate and the cover layer. The substrates of each side are bonded together.

The optical disk is recordable on both sides. Data can be written onto the disk as marks with Phase Change characteristics variations in the recording layer, using a focused optical beam. Data can be read by the optical beam using the change in reflectivity and diffraction between mark and space in the recording layer. The beam accesses the recording layer through the transparent cover layer of the disk.

© ISO/IEC 2008 – All rights reserved

Copyright International Organization for Standardization
Provided by IHS under license with ISO
No reproduction or networking permitted without license from IHS
Not for Resale

The disk contains pre-embossed read-only data. This data can be read using the diffraction of the optical beam by the embossed information.

8 General requirement

8.1 Environments

8.1.1 Test environment

The test environment is the environment where the air immediately surrounding the optical disk cartridge has the following properties:

Temperature: 23 °C ± 2 °C

Relative humidity: 45 % to 55 %

Atmospheric pressure: 60 kPa to 106 kPa

Air cleanliness: Class 100 000 (see Annex A)

No condensation on or in the optical disk cartridge shall occur. Before testing, the optical disk cartridge shall be conditioned to this environment for 48 hours minimum. It is recommended that, before testing, the entrance surface of the disk be cleaned according to the instructions of the manufacturer of the disk.

Unless otherwise stated, all tests and measurements shall be made in this test environment.

8.1.2 Operating environment

This International Standard requires that an optical disk cartridge, which meets all requirements of this Standard in the specified test environment, provides interchange over the specified ranges of environmental parameters in the operating environment.

The operating environment is the environment where air immediately surrounding the optical disk cartridge has the following properties:

Temperature: 5 °C to 55 °C

Relative humidity: 3 % to 85 %

Absolute humidity: 1 g/m^3 to 30 g/m^3

Atmospheric pressure: 60 kPa to 106 kPa

Temperature gradient: 10 °C/h max.

Relative humidity gradient: 10 %/h max.

Air cleanliness: Office environment (see Annex N)

No condensation on or in the optical disk cartridge shall occur. If an optical disk cartridge has been exposed to conditions outside those specified in this clause, it shall be acclimatized in an allowed operating environment for at least 2 hours before use (see also Annex O).

--`,,```,,,,````-`-`,,`,,`,`,,`---
© ISO/IEC 2008 – All rights reserved
Copyright International Organization for Standardization
Provided by IHS under license with ISO
No reproduction or networking permitted without license from IHS
Not for Resale

8.1.3 Storage environment

The optical disk cartridge without any protective enclosure shall not be stored in an environment outside the range allowed for storage. The storage environment is defined as an environment where the air immediately surrounding the optical disk cartridge has the following properties:

Temperature: - 10 °C to 55 °C

Relative humidity: 3 % to 90 %

Absolute humidity: 1 g/m^3 to 30 g/m^3

Atmospheric pressure: 60 kPa to 106 kPa

Temperature gradient: 15 °C/h max.

Relative humidity gradient: 10 %/h max.

Air cleanliness: Office environment (see Annex N)

No condensation on or in the optical disk cartridge shall occur.

8.1.4 Transportation

This International Standard does not specify requirements for transportation. Guidance for transportation is given in Annex P.

8.2 Temperature shock

The optical disk cartridge shall withstand a temperature shock of up to 20 °C when inserted into, or removed from, the drive.

8.3 Safety requirements

The cartridge shall satisfy the safety requirements of Standards ECMA-287 and ISO/IEC 28360, when used in the intended manner or in any foreseeable use in an information processing system.

8.4 Flammability

The cartridge and its components shall be made from materials that comply with the flammability class for HB materials, or better, as specified in Standard ECMA-287.

9 Reference Drive

The Reference Drive is a drive several critical components of which have well defined properties and which is used to test the read, write, and erase parameters of the disk for conformance to this International Standard. This section gives an outline of all components; components critical for tests in specific sections are specified in those sections.

9.1 Optical system

The basic set-up of the optical system of the Reference Drive used for measuring the write, read and erase parameters is shown in Figure 1.a. Different components and locations of components are permitted, provided that the performance remains the same as that of the set-up in Figure 1.a. The optical system shall be such that the detected light reflected from the entrance surface of the disk is minimized so as not to influence the accuracy of the measurements.

--`,,```,,,,````-`-`,,`,,`,`,,`---
© ISO/IEC 2008 – All rights reserved

Copyright International Organization for Standardization
Provided by IHS under license with ISO
No reproduction or networking permitted without license from IHS
Not for Resale

The combination of the polarizing beamsplitter D and quarter-wave plate E separates the incident optical beam and the beam reflected from the optical disk G. The polarizing beamsplitter D shall have a p-s intensity reflectance ratio of at least 90.

The spherical aberration of the focused beam shall be minimized by a spherical aberration adaptor L for the thickness of the cover layer in the Middle RFO Zone (See 19.2.4).

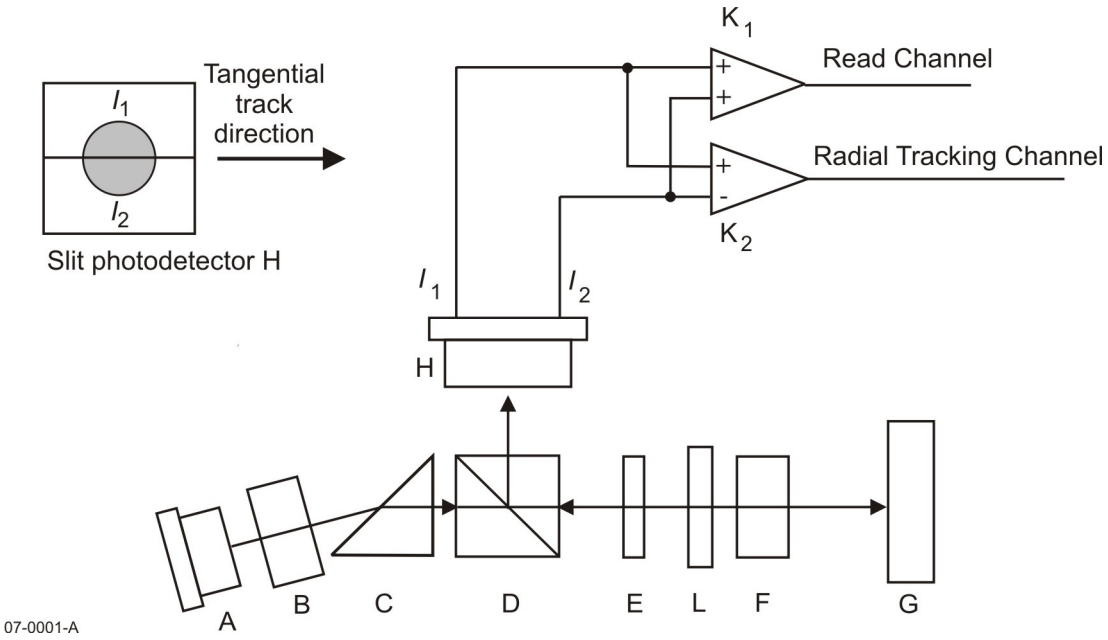

A	Laser diode	G	Optical disk
B	Collimator lens	H	Split photodetector
C	Optional shaping prism	I_1, I_2	Outputs currents from the split photodetector
D	Polarizing beamsplitter	K_1, K_2	d.c.-coupled amplifiers
E	Quarter-wave plate	L	Spherical aberration adaptor
F	Objective lens		

Figure 1.a — Optical system of the Reference Drive

9.2 Optical beam

The focused optical beam used for writing, reading and erasing data shall have the following properties:

Wavelength (λ)	405 nm to 410 nm
Polarization	Circular
Numerical aperture	0,85 ± 0,01
Light intensity at the rim of the pupil of the objective lens	50 % to 60 % of the maximum intensity level in the radial and tangential directions
Wave front aberration with spherical aberration adjustment after passing through cover layer with thicknesses from 95 µm to 105 µm (and an ideal index of refraction of 1,55)	0,033 λ rms max.
Relative intensity noise (RIN) 10 log [(a.c. light power density/Hz)/d.c. light power]	- 130 dB/Hz max.

© ISO/IEC 2008 – All rights reserved
Copyright International Organization for Standardization
Provided by IHS under license with ISO
No reproduction or networking permitted without license from IHS
Not for Resale

9.3 Tracking

The method of generating the axial tracking error is not specified for the Reference Drive.

The radial tracking error is generated in the Radial Tracking Channel from the output currents of a split photodiode detector, the division of which runs parallel to the image of the tracks on the diode (see Figure 1.a).

The radial tracking error signal relates to the difference in the amount of light in the two halves of the exit pupil of the objective lens.

The amplifier K_2 after the photodetector shall be d.c.-coupled with the bandwidth characteristics specified in Clause 23.

The requirements for the accuracy with which the focus of the optical beam must follow the tracks are specified in 22.2.4.

9.4 Read Channel

The Read Channel shall be used for reading preformatted and user-written data.

The Read Channel shall detect the total amount of light in the exit pupil of the objective lens.

The amplifier K_1 after the photodetector shall have a flat response within 1 dB from d.c. to 90 MHz.

The read signal shall be equalized by an analog pre-equalizer as specified in Annex B.1 and shall be digitized via an 8-bit analog to digital converter.

The digitized signal shall be equalized by a digital 21 tap transversal filter as specified in Annex B.2 and decoded by a Viterbi Decoder for a PR(11211) scheme, with 7 target levels and 16 states, with a depth of 32 Channel-bits, as shown on Figure 1.b.

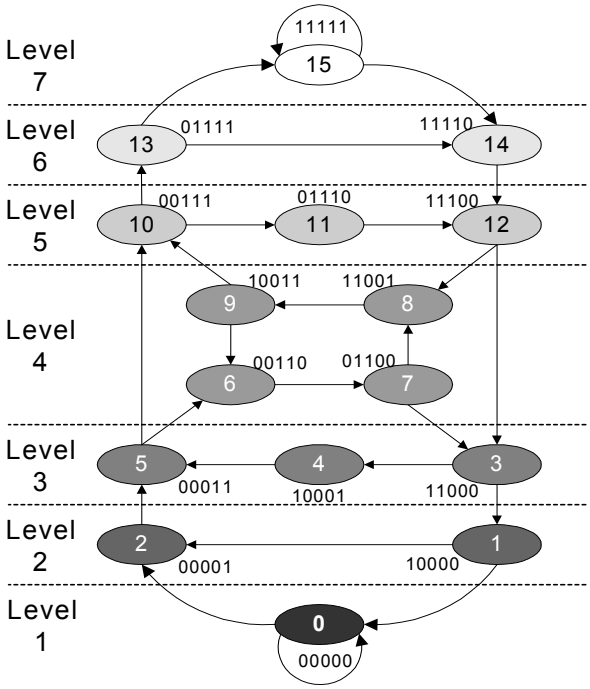

Figure 1.b — State machine for the Viterbi decoder

© ISO/IEC 2008 All rights reserved
Copyright International Organization for Standardization
Provided by IHS under license with ISO
No reproduction or networking permitted without license from IHS
Not for Resale

The Viterbi decoder provides a figure of merit called Viterbi Target Error (VTE). A VTE value is generated for every processed Data Sector. VTE is the average absolute error value of all signal samples in a Sector, with respect to the ideal target levels. The Viterbi Decoder decides, after a delay of 32 Channel-bits, what the ideal target level was for the signal samples. The 7 ideal target levels are equally spaced in vertical direction (i.e. equal amplitude spacing). The Viterbi Decoder actually uses 7 adaptive target levels for the decoding.

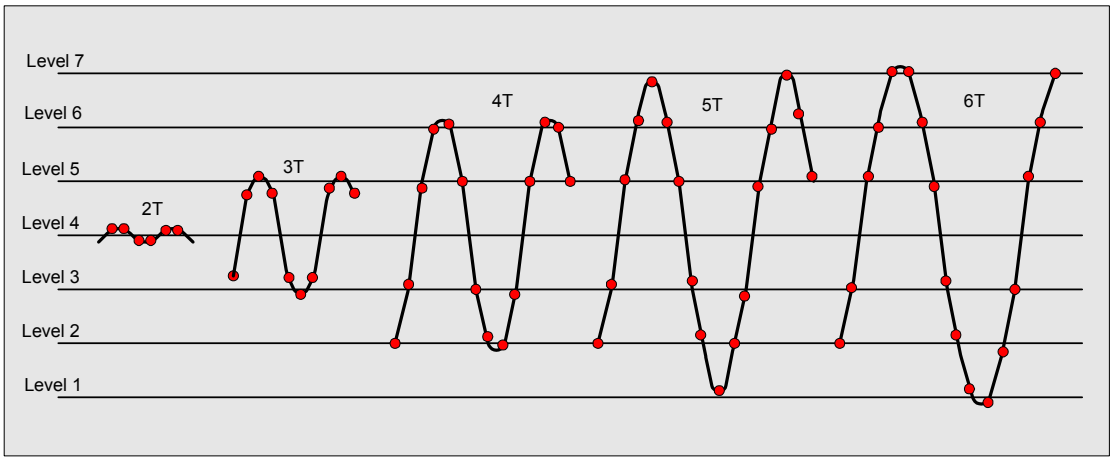

Figure 1.c — Seven ideal Viterbi Target Levels with some waveforms

Figure 1.c shows the 7 ideal target levels with some waveforms and the associated signal samples. The deviation (in absolute value) of these samples with respect to their ideal target level is used to compute the VTE value. The drive accumulates all the error values and also counts the number of samples used for the accumulator. A Defect Detector in the channel may temporarily interrupt the accumulation.

An automatic gain control in the Read Channel controls the gain of the read signal in such a way that the difference of the adaptive levels 6 and 2 has a certain magnitude. The ideal target levels 6 and 2, as shown above, are identical to the adaptive levels 6 and 2, but the 5 other ideal target levels are derived from these levels 6 and 2. The difference between level 6 and Level 2 represents the peak-to-peak amplitude of 4T-4T runs.

At the end of each Sector the Read Channel processing device provides the accumulated sample-error value, the count of the number of used samples and the values of Level 6 and Level 2. From this information the Sector's VTE, in percentage of the 4T-amplitude (i.e. normalized) is computed. A good Sector has a low VTE value.

It should be noted that VTE is minimal if the recorded data has good symmetry and low noise.

9.5 Rotation of the disk

The spindle shall position the disk as specified in 12.4. It shall rotate the disk at 28,73 Hz ± 0,25 % for Type RW media and 29,90 Hz ± 0,25 % for Type WORM media. The direction of rotation of the disk side being tested shall be counter-clockwise when viewed from the objective lens.

--`,,```,,,,````-`-`,,`,,`,`,,`---
Copyright International Organization for Standardization
Provided by IHS under license with ISO
No reproduction or networking permitted without license from IHS
© ISO/IEC 2008 – All rights reserved
Not for Resale

Section 2 — Mechanical and physical characteristics

10 Dimensional and physical characteristics of the case

10.1 General description of the case

The case (see Figure 2) is a rigid protective container of rectangular shape. It has windows on both side A and side B to allow the spindle of the drive to clamp the disk by its hub and to allow the head to access the disk. The A- or B-shutter uncovers the window upon insertion into the drive, and automatically covers it upon removal from the drive. The case has media identification, write-inhibit, mis-insertion features, detent for autoloading, gripper slots for an autochanger, label areas, and side identification inscriptions.

10.2 Relationship of Sides A and B

The features essential for physical interchangeability are represented in Figure 2. When Side A of the cartridge faces upwards, Side A of the disk faces downwards. Sides A and B of the case are identical as far as the features given here are concerned. The description is given for one side only. References to Sides A and B can be changed to B or A respectively.

10.3 Reference axes and case reference planes

There is a Case Reference Plane P for each side of the case. Each Case Reference Plane P contains two orthogonal axes X and Y to which the dimensions of the case are referred. The intersection of the X and Y axes defines the centre of the location hole. The X axis extends through the centre of the alignment hole.

10.4 Case drawings

The case is represented schematically by the following drawings.

Figure 2 shows a composite drawing of Side A of the case in isometric form, with the major features identified from Side A.

Figure 3 shows the envelope of the case with respect to a location hole at the intersection of the X and Y axes of Case Reference Plane P.

Figure 4 shows the surfaces S1, S2, S3 and S4 that establish the Case Reference Plane P.

Figure 4.a shows the details of surface S3.

Figure 5 shows the details of the insertion slot and detent.

Figure 6 shows the gripper slots, used for automatic handling.

Figure 7 shows the write-inhibit holes.

Figure 8 shows the media identification sensor holes.

Figure 9 shows the head and motor window.

Figure 10 shows the shutter opening features.

Figures 11.a and 11.b show the user label areas.

© ISO/IEC 2008 – All rights reserved

Copyright International Organization for Standardization
Provided by IHS under license with ISO
No reproduction or networking permitted without license from IHS
Not for Resale

10.5 Dimensions of the case

10.5.1 Overall dimensions

The total length of the case (see Figure 3) shall be

L_1 = 153,0 mm ± 0,4 mm

The distance from the top of the case to the reference axis X shall be

L_2 = 127,0 mm ± 0,3 mm

The distance from the bottom of the case to the reference axis X shall be

L_3 = 26,0 mm ± 0,3 mm

The total width of the case shall be

$$L_4 = 135{,}0 \text{ mm} \begin{matrix} +\ 0{,}0 \text{ mm} \\ -\ 0{,}6 \text{ mm} \end{matrix}$$

The distance from the left-hand side of the cartridge to the reference axis Y shall be

$$L_5 = 128{,}5 \text{ mm} \begin{matrix} +\ 0{,}0 \text{ mm} \\ -\ 0{,}5 \text{ mm} \end{matrix}$$

The distance from the right-hand side of the cartridge to the reference axis Y shall be

L_6 = 6,5 mm ± 0,2 mm

The width shall be reduced on the top by the radius

$R_1 = L_4$

originating from a point defined by L_5 and

L_7 = 101,0 mm ± 0,3 mm

The two corners of the top shall be rounded with a radius

R_2 = 1,5 mm ± 0,5 mm

and the two corners at the bottom with a radius

R_3 = 3,0 mm ± 1,0 mm

The thickness of the case shall be

L_8 = 11,00 mm ± 0,30 mm

The eight long edges of the case shall be rounded with a radius

R_4 = 1,0 mm max.

© ISO/IEC 2008 – All rights reserved
Copyright International Organization for Standardization
Provided by IHS under license with ISO
No reproduction or networking permitted without license from IHS
Not for Resale

10.5.2 Location hole

The centre of the location hole (see Figure 3) shall coincide with the intersection of the reference axes X and Y. It shall have a square form with a side length of

$$L_9 = 4{,}10 \text{ mm} \begin{matrix} +\ 0{,}00 \text{ mm} \\ -\ 0{,}06 \text{ mm} \end{matrix}$$

held to a depth of

L_{10} = 2,35 mm (i.e. typical wall thickness)

after which a cavity extends through to the alignment hole on the opposite side of the case.

The lead-in edges shall be rounded with a radius

R_5 = 0,5 mm max.

10.5.3 Alignment hole

The centre of the alignment hole (see Figure 3) shall lie on reference axis X at a distance of

L_{11} = 122,0 mm ± 0,2 mm

from the reference axis Y.

The dimensions of the hole shall be

$$L_{12} = 4{,}10 \text{ mm} \begin{matrix} +\ 0{,}00 \text{ mm} \\ -\ 0{,}06 \text{ mm} \end{matrix}$$

and

$$L_{13} = 5{,}0 \text{ mm} \begin{matrix} +\ 0{,}2 \text{ mm} \\ -\ 0{,}0 \text{ mm} \end{matrix}$$

held to a depth of L_{10}, after which a cavity extends through to the location hole on the opposite side of the case.

The lead-in edges shall be rounded with radius R_5.

10.5.4 Surfaces on Case Reference Planes P

The Case Reference Plane P (see Figures 4 and 4.a) for a side of the case shall contain four surfaces (S1, S2, S3 and S4) on that side of the case, specified as follows:

Two circular surfaces S1 and S2.

Surface S1 shall be a circular area centred around the square location hole and have a diameter of

D_1 = 9,0 mm min.

--`,,```,,,,````-`-`,,`,,`,`,,`---

© ISO/IEC 2008 – All rights reserved

Copyright International Organization for Standardization
Provided by IHS under license with ISO
No reproduction or networking permitted without license from IHS
Not for Resale

Surface S2 shall be a circular area centred around the rectangular alignment hole and have a diameter of

D_2 = 9,0 mm min.

Two elongated surfaces S3 and S4, that follow the contour of the cartridge and shutter edges.

Surfaces S3 and S4 are shaped symmetrically.

Surface S3 shall be defined by two circular sections with radii

R_6 = 1,5 mm ± 0,1 mm

with an origin given by

L_{14} = 4,0 mm ± 0,1 mm

L_{15} = 86,0 mm ± 0,3 mm

and

R_7 = 1,5 mm ± 0,1 mm

with an origin given by

L_{16} = 1,9 mm ± 0,1 mm

L_{17} = 124,5 mm ± 0,3 mm

The arc with radius R_7 shall continue on the right hand side with radius

$$R_8 = 134{,}0 \text{ mm} \begin{matrix} +\ 0{,}2 \text{ mm} \\ -\ 0{,}7 \text{ mm} \end{matrix}$$

which is a dimension resulting from L_5 + L_{14} + R_6 with an origin given by L_5 and L_7. A straight, vertical line shall smoothly join the arc of R_6 to the arc of R_8.

The left-hand side of S3 shall be bounded by radius

R_9 = 4,5 mm ± 0,3 mm

which is a dimension resulting from L_{18} + L_{14} - R_6 with an origin given by

L_{18} = 2,0 mm ± 0,1 mm

L_{19} = 115,5 mm ± 0,3 mm

The left-hand side of the boundary shall be closed by two straight lines. The first one shall smoothly join the arc of R_6 to the arc of R_9. The second one shall run from the left-hand tangent of R_7 to its intersection with R_9.

10.5.5 Insertion slots and detent features

The case shall have two symmetrical insertion slots with embedded detent features (see Figure 5). The slots shall have a length of

L_{20} = 35,0 mm ± 0,3 mm

© ISO/IEC 2008 – All rights reserved
Copyright International Organization for Standardization
Provided by IHS under license with ISO
No reproduction or networking permitted without license from IHS
Not for Resale

a width of

$$L_{21} = 6{,}0\ \text{mm}\ {}^{+\ 0{,}3\ \text{mm}}_{-\ 0{,}0\ \text{mm}}$$

and a depth of

L_{22} = 3,0 mm ± 0,1 mm

located

L_{23} = 2,5 mm ± 0,2 mm

from Case Reference Plane P.

The slots shall have a lead-in chamfer given by

L_{24} = 0,5 mm max.

L_{25} = 5,0 mm max.

The detent notch shall be a semi-circle of radius

R_{10} = 3,0 mm ± 0,2 mm

with the origin given by

L_{26} = 13,0 mm ± 0,3 mm

L_{27} = 2,0 mm ± 0,1 mm

L_{28} = 114,0 mm ± 0,3 mm

The dimensions L_2, L_{26}, and L_{28} are interrelated, their values shall be such so that they are all three within specification.

10.5.6 Gripper slots

The case shall have two symmetrical gripper slots (see Figure 6) with a depth of

L_{29} = 5,0 mm ± 0,3 mm

from the edge of the case and a width of

L_{30} = 6,0 mm ± 0,3 mm

The upper edge of a slot shall be

L_{31} = 12,0 mm ± 0,3 mm

above the bottom of the case.

© ISO/IEC 2008 – All rights reserved

Copyright International Organization for Standardization
Provided by IHS under license with ISO
No reproduction or networking permitted without license from IHS
Not for Resale

10.5.7 Write-inhibit holes

Sides A and B shall each have a write-inhibit hole (see Figure 7). The case shall include a device for opening and closing each hole. The hole at the left-hand side of Side A of the case, is the write-inhibit hole for Side A of the disk. The protected side of the disk shall be made clear by inscriptions on the case or by the fact that the device for Side A of the disk can only be operated from Side A of the case.

When writing and erasing on Side A of the disk is not allowed, the write-inhibit hole shall be open all through the case. It shall have a diameter

D_3 = 4,0 mm min.

Its centre shall be specified by

L_{32} = 8,0 mm ± 0,2 mm

L_{33} = 111,0 mm ± 0,3 mm

on Side A of the case.

When writing is allowed on Side A of the disk, the write-inhibit hole shall be closed on Side A of the case, at a depth of typically L_{10}, i.e. the wall thickness of the case. In this state, the opposite side of the same hole, at Side B of the case, shall be closed and not recessed from the Case Reference Plane P of Side B of the case by more than

L_{34} = 0,3 mm max.

The opposite side of the write-inhibit hole for protecting Side B of the disk shall have a diameter D_3. Its centre shall be specified by L_{32} and

L_{35} = 11,0 mm ± 0,2 mm

on Side A of the case.

10.5.8 Media identification sensor holes

There shall be two sets of two media sensor holes (see Figure 8). The holes shall extend through the case, and have a diameter of

$$D_4 = 4{,}0 \text{ mm} \begin{matrix} +\,0{,}3 \text{ mm} \\ -\,0{,}0 \text{ mm} \end{matrix}$$

the positions of their centres shall be specified by L_{33}, L_{35} and

L_{36} = 19,5 mm ± 0,2 mm

L_{37} = 17,0 mm ± 0,2 mm

L_{38} = 105,0 mm ± 0,3 mm

A hole is deemed to be open when there is no obstruction in this hole over a diameter D_4 all through the case.

A hole is deemed to be closed, when the hole is closed on both Side A and Side B of the case. The closure shall be recessed from Case Reference plane P by

L_{39} = 0,3 mm max.

© ISO/IEC 2008 – All rights reserved
Copyright International Organization for Standardization
Provided by IHS under license with ISO
No reproduction or networking permitted without license from IHS
Not for Resale

The holes closest to the long edges of the case are numbered 1. The other holes are numbered 2. The meaning of the status (closed, open) of each hole shall be as in Table 1.

Table 1 — Media identification sensor holes

Sensor Hole No.	Indication	Closed	Open
1	Media Type	WORM	RW
2	UDO Type	UDO 1	UDO 2

UDO 1 = 1st generation conforming to ISO/IEC 17345.
UDO 2 = 2nd generation conforming to this Standard.

10.5.9 Head and motor window

The case shall have a window on each side to enable the optical head and the motor spindle to access the disk (see Figure 9). The dimensions are referenced to a centreline, located at a distance of

L_{40} = 61,0 mm ± 0,2 mm

to the left of reference axis Y.

The width of the head access shall be defined by

L_{41} = 17,50 mm min.

L_{42} = 17,50 mm min.

and its height shall extend to

L_{43} = 118,2 mm min.

The two inside corners shall be rounded with a radius of

R_{11} = 3,0 mm max.

The motor spindle access shall have a diameter of

D_5 = 35,0 mm min.

and its centre shall be defined by L_{40} and

L_{44} = 43,0 mm ± 0,2 mm

10.5.10 Shutters

The case shall have two spring-loaded, unidirectional shutters (see Figure 10), designed to completely cover the head and motor windows when closed. A shutter movement of 36,5 mm shall be sufficient to ensure that the head and motor window is opened to the minimum size specified in 10.5.9. The shutter shall be free to slide in a recessed area of the case in such a way as to ensure that the overall thickness of the case and shutter shall not exceed L_8.

The top surface of the shutters shall be at

L_{45} = 126,7 mm ± 0,3 mm

© ISO/IEC 2008 – All rights reserved

Copyright International Organization for Standardization
Provided by IHS under license with ISO
No reproduction or networking permitted without license from IHS
Not for Resale

10.5.11 Slots for shutter opener

Both Side A and Side B shutter shall have only one slot (see Figure 10) in which the shutter opener of the drive can engage to open the shutter. The slot shall be dimensioned as follows:

When the shutter is closed, the centre of the slot used to push the shutter open shall be located at a distance of

L_{46} = 55,0 mm ± 0,5 mm

from reference axis Y on either side the case.

The length of the slot shall be

L_{47} = 7,0 mm ± 0,1 mm

The depth of the slot shall be

L_{48} = 3,5 mm ± 0,5 mm

The width of each slot from the Case Reference Plane P of Side A and B of the case shall be

$$L_{49} = 4{,}5 \text{ mm} \begin{matrix} +\ 0{,}5 \text{ mm} \\ -\ 0{,}0 \text{ mm} \end{matrix}$$

10.5.12 Slots to prevent insertion into a MO-drive

The case shall have two non-moveable slots (see Figure 10) designed to prevent from insertion into MO-drives using cartridges conforming to Standard ISO/IEC 22092 (or into drives using similar cartridge designs as specified in ISO/IEC 18093, ISO/IEC 15486, ISO/IEC 13842, ISO/IEC 13549, ISO/IEC 13481, and ISO/IEC 11560). These two non-moveable slots have no function when the case is inserted into a drive designed to receive cartridges conforming to this International Standard.

The edge designed to engage with the shutter opening arm of such MO-drives and so prevent further insertion, shall be located at a distance of

L_{50} = 36,5 mm ± 0,2 mm

from reference axis Y on either side the case.

The length of the slot shall be

L_{51} = 4,5 mm ± 0,5 mm

and the angle of the lead-out ramp shall be

A_1 = 60,0° ± 1,0°

The depth of the slot shall be

L_{52} = 4,0 mm ± 0,5 mm

With both side A and side B shutter closed the width of each slot shall be the full width of the case L_8.

© ISO/IEC 2008 – All rights reserved
Copyright International Organization for Standardization
Provided by IHS under license with ISO
No reproduction or networking permitted without license from IHS
Not for Resale

10.5.13 User label areas

The case shall have the following minimum areas for user labels (see Figure 11.a):

on Side A and Side B: 33,5 mm x 70,5 mm

on the bottom side: 7,0 mm x 115,0 mm

These areas shall be recessed by 0,2 mm min. Their positions are specified by the following dimensions and relations between dimensions.

L_{53} = 29,0 mm min.

L_{54} - L_{53} = 70,5 mm min.

L_{56} - L_{55} = 33,5 mm min.

L_8 - L_{59} - L_{60} = 7,0 mm min.

L_4 - L_{57} - L_{58} = 115,0 mm min.

10.6 Mechanical characteristics

All requirements of this clause shall be met in the operating environment.

10.6.1 Materials

The case shall be constructed from any suitable materials such that it meets the requirements of this International Standard.

10.6.2 Mass

The mass of the case without the optical disk shall not exceed 150 g.

10.6.3 Edge distortion

The cartridge shall meet the requirement of the edge distortion test defined in Annex C.

10.6.4 Compliance

The cartridge shall meet the requirement of the compliance (flexibility) test defined in Annex D. The requirement guarantees that a cartridge can be constrained in the proper plane of operation within the drive.

10.6.5 Shutter opening force

The spring force on the shutter shall be such that the force required to open the shutter does not exceed 2 N. It shall be sufficiently strong to close a free-sliding shutter, irrespective of the orientation of the case.

10.7 Drop test

The optical disk cartridge shall withstand dropping on each surface and on each corner from a height of 1,2 m onto a concrete floor covered with a vinyl layer 2 mm thick. The cartridge shall withstand all such impacts without any functional failure.

The write-inhibit switches shall not move to change the state (open or closed) of the write-inhibit holes during the drop test.

© ISO/IEC 2008 – All rights reserved

Copyright International Organization for Standardization
Provided by IHS under license with ISO
No reproduction or networking permitted without license from IHS
Not for Resale

10.8 Electro-static discharge test

The optical disk cartridge shall meet the electro-static discharge requirements specified in Annex E.

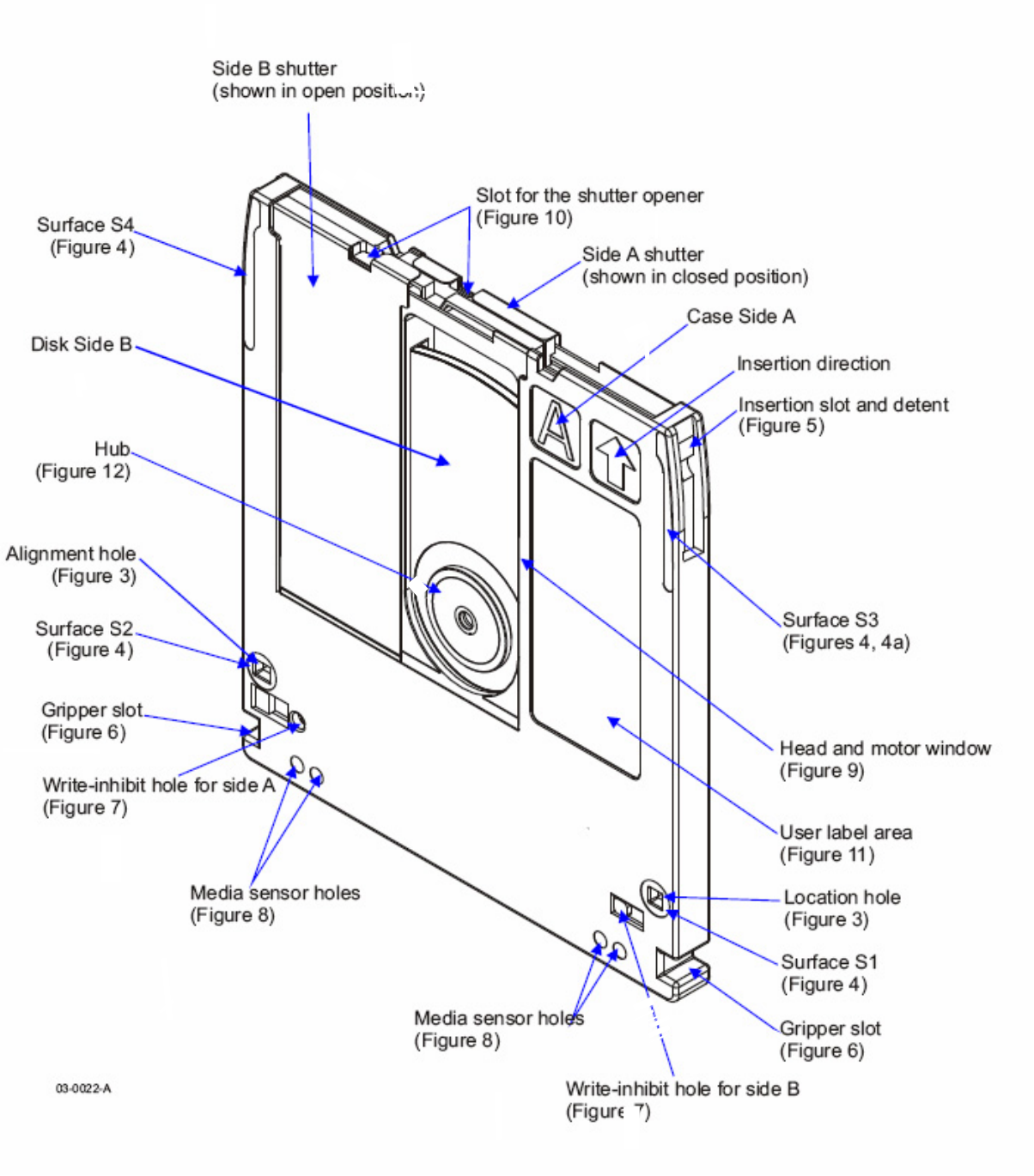

Figure 2 — Case

© ISO/IEC 2008 – All rights reserved
Copyright International Organization for Standardization
Provided by IHS under license with ISO
No reproduction or networking permitted without license from IHS
Not for Resale

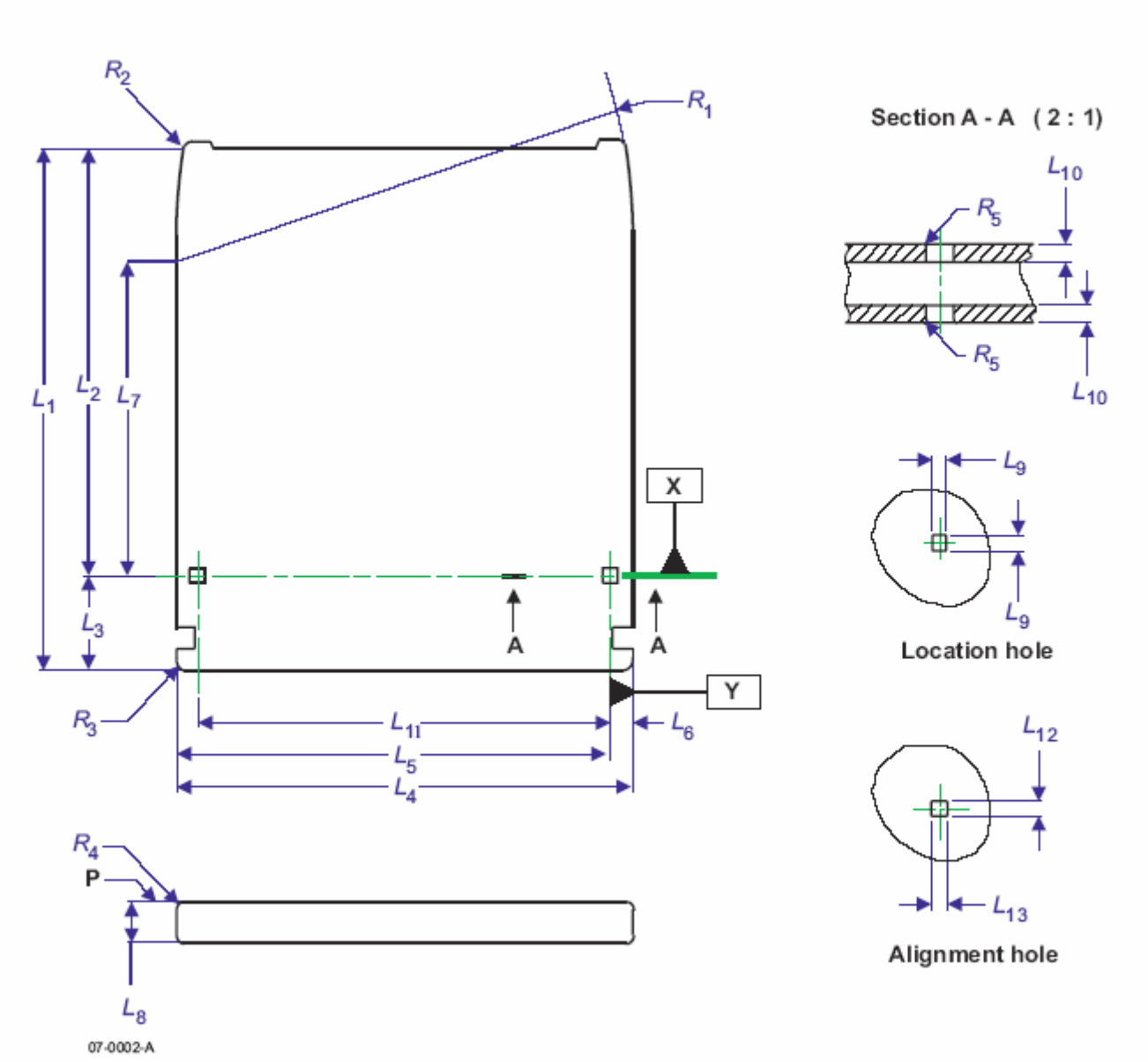

Figure 3 — Overall dimensions and reference axes

--`,,```,,,,````-`-`,,`,,`,`,,`---

© ISO/IEC 2008 – All rights reserved
Copyright International Organization for Standardization
Provided by IHS under license with ISO
No reproduction or networking permitted without license from IHS
Not for Resale

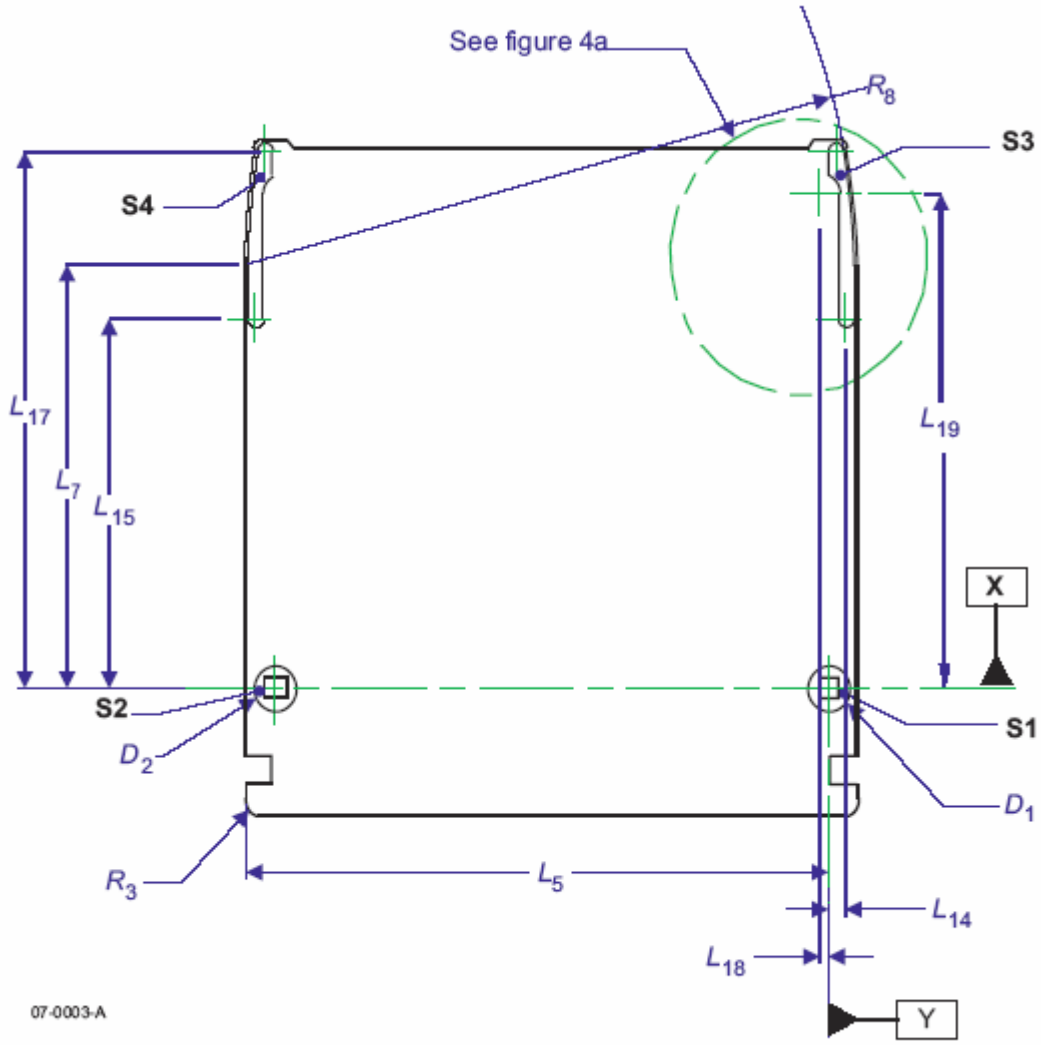

Figure 4 — Surfaces S1, S2, S3 and S4 of the Case Reference Plane P

Copyright International Organization for Standardization
Provided by IHS under license with ISO
No reproduction or networking permitted without license from IHS
© ISO/IEC 2008 – All rights reserved
Not for Resale

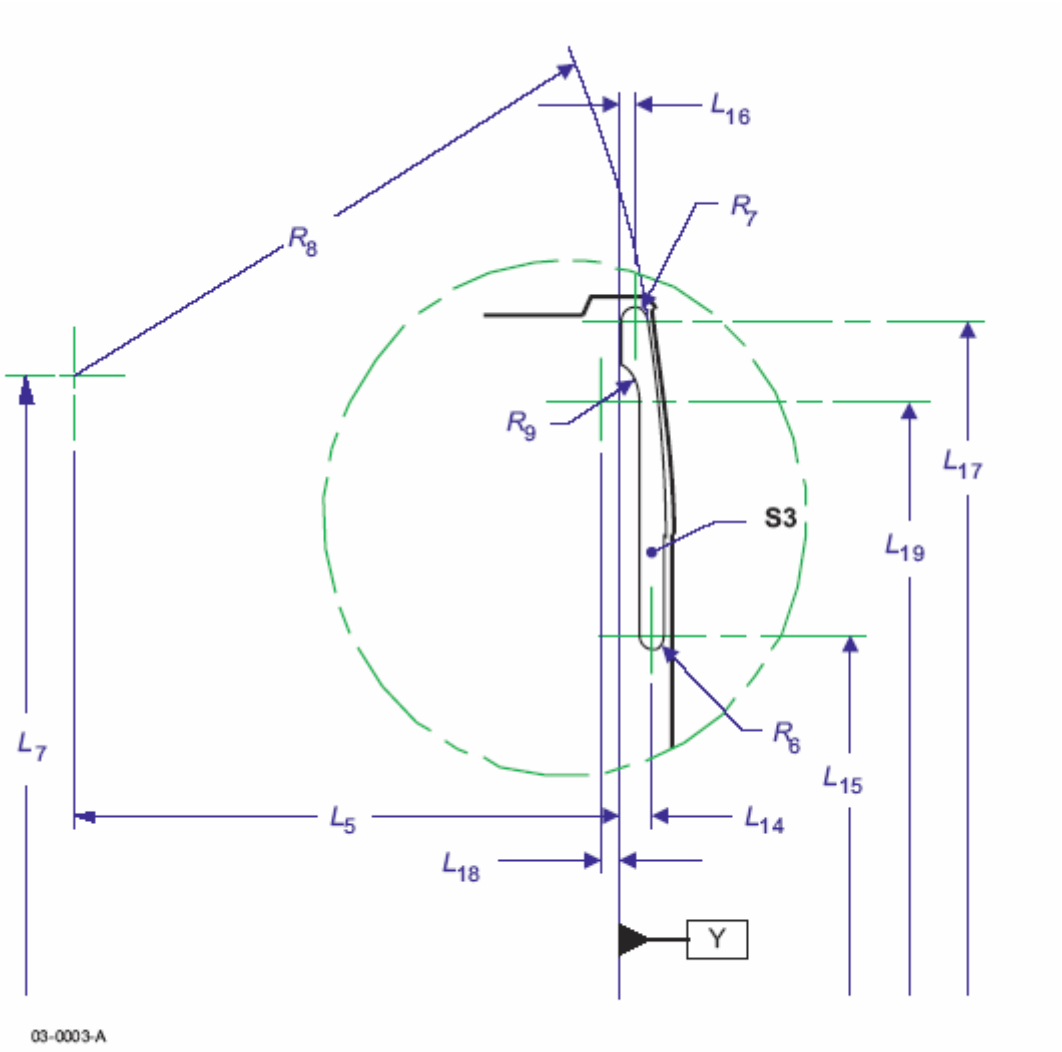

Figure 4.a — Details of surface S3

--`,,```,,,,````-`-,,`,,`,`,,`---
© ISO/IEC 2008 – All rights reserved
Copyright International Organization for Standardization
Provided by IHS under license with ISO
No reproduction or networking permitted without license from IHS
Not for Resale

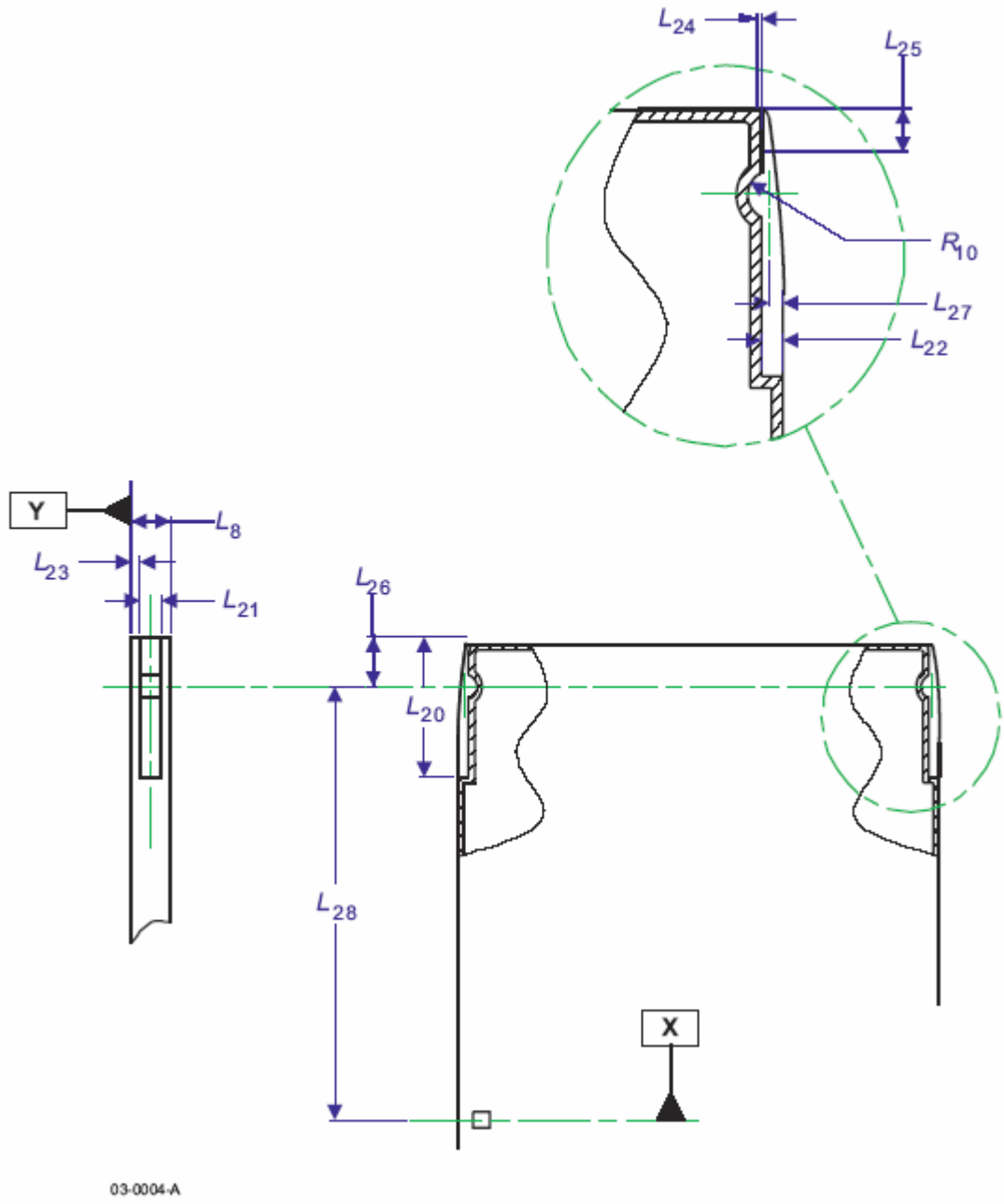

Figure 5 — Insertion slots and detents

--`,,```,,,,````-`-`,,`,,`,`,,`---
© ISO/IEC 2008 – All rights reserved
Copyright International Organization for Standardization
Provided by IHS under license with ISO
No reproduction or networking permitted without license from IHS
Not for Resale

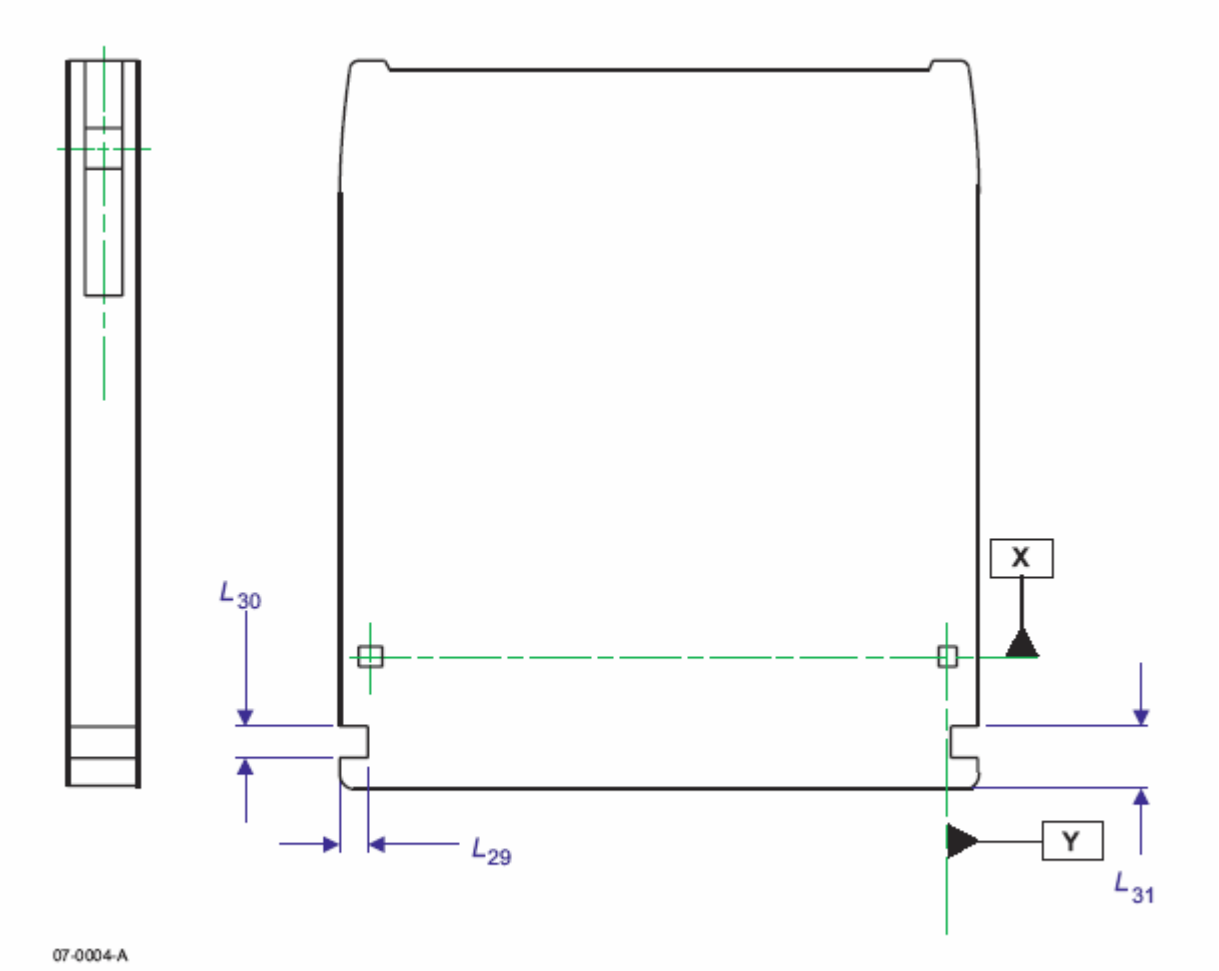

Figure 6 — Gripper slots

--`,,```,,,,````-`-`,,`,,`,`,,`---
© ISO/IEC 2008 – All rights reserved
Copyright International Organization for Standardization
Provided by IHS under license with ISO
No reproduction or networking permitted without license from IHS
Not for Resale

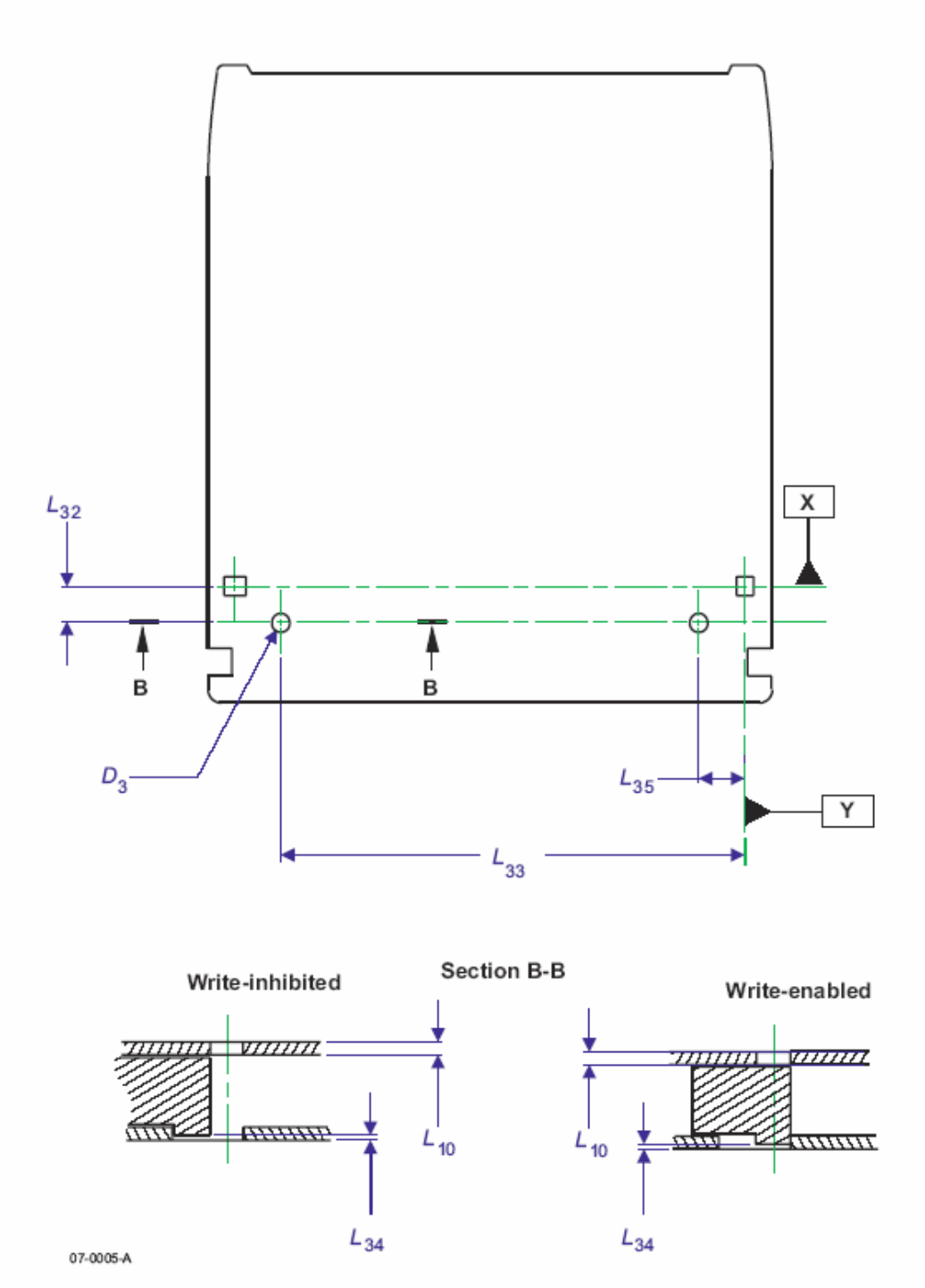

Figure 7 — Write-inhibit holes

Copyright International Organization for Standardization
Provided by IHS under license with ISO
No reproduction or networking permitted without license from IHS
Not for Resale
© ISO/IEC 2008 – All rights reserved

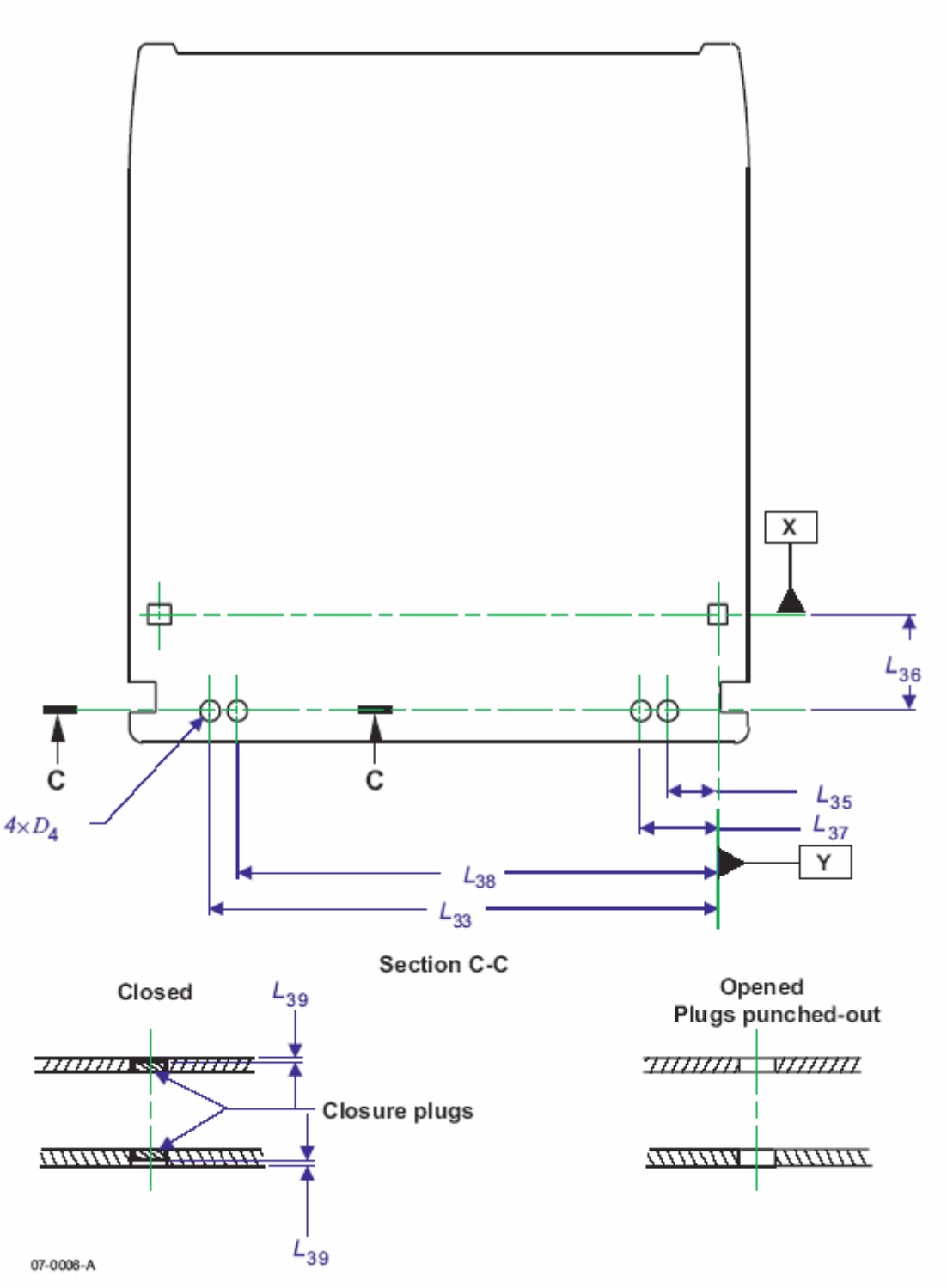

Figure 8 — Media identification sensor holes

© ISO/IEC 2008 – All rights reserved

Copyright International Organization for Standardization
Provided by IHS under license with ISO
No reproduction or networking permitted without license from IHS
Not for Resale

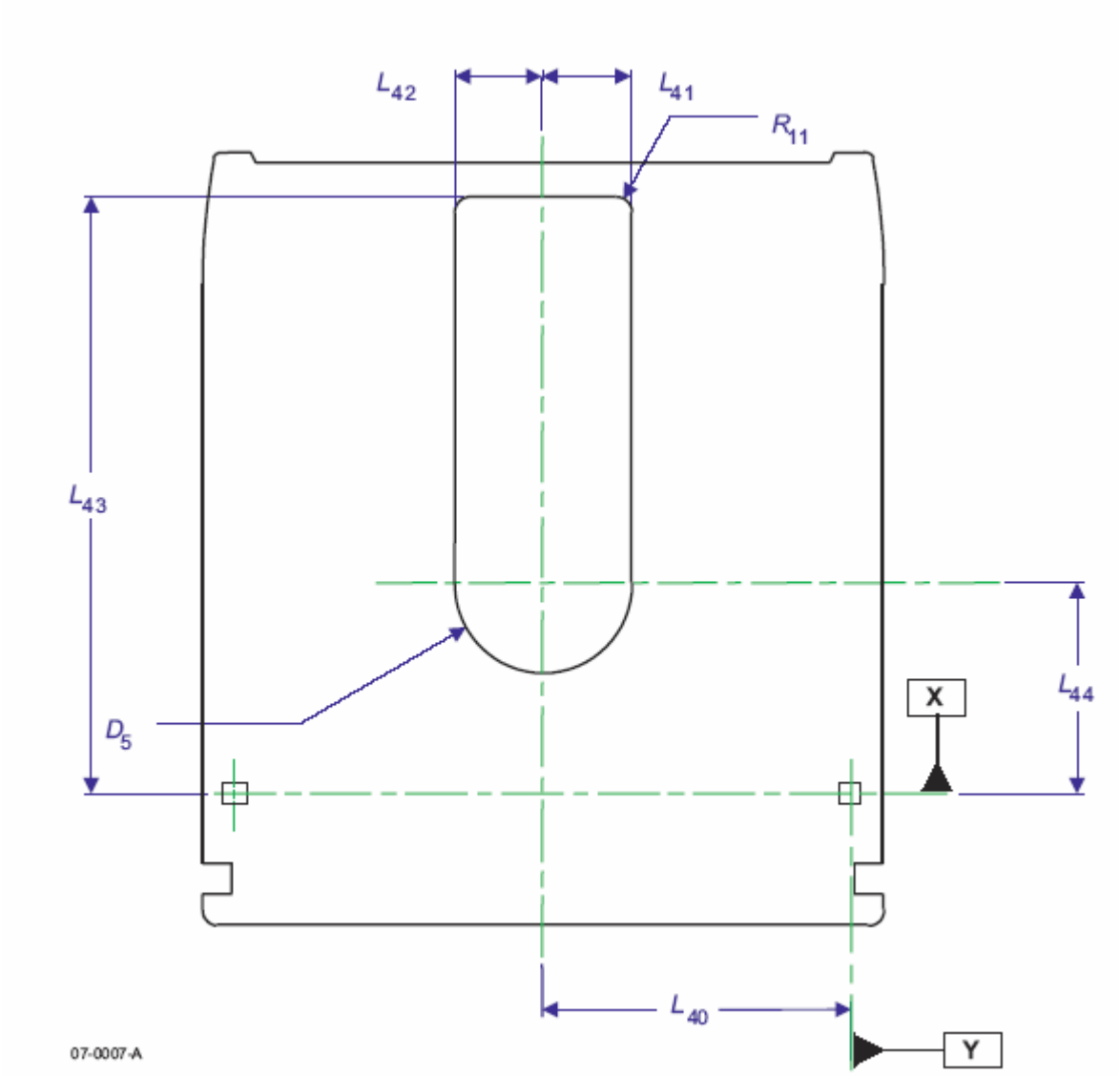

Figure 9 — Head and motor window

--`,,```,,,,````-`-`,,`,,`,`,,`---

© ISO/IEC 2008 – All rights reserved
Copyright International Organization for Standardization
Provided by IHS under license with ISO
No reproduction or networking permitted without license from IHS
Not for Resale

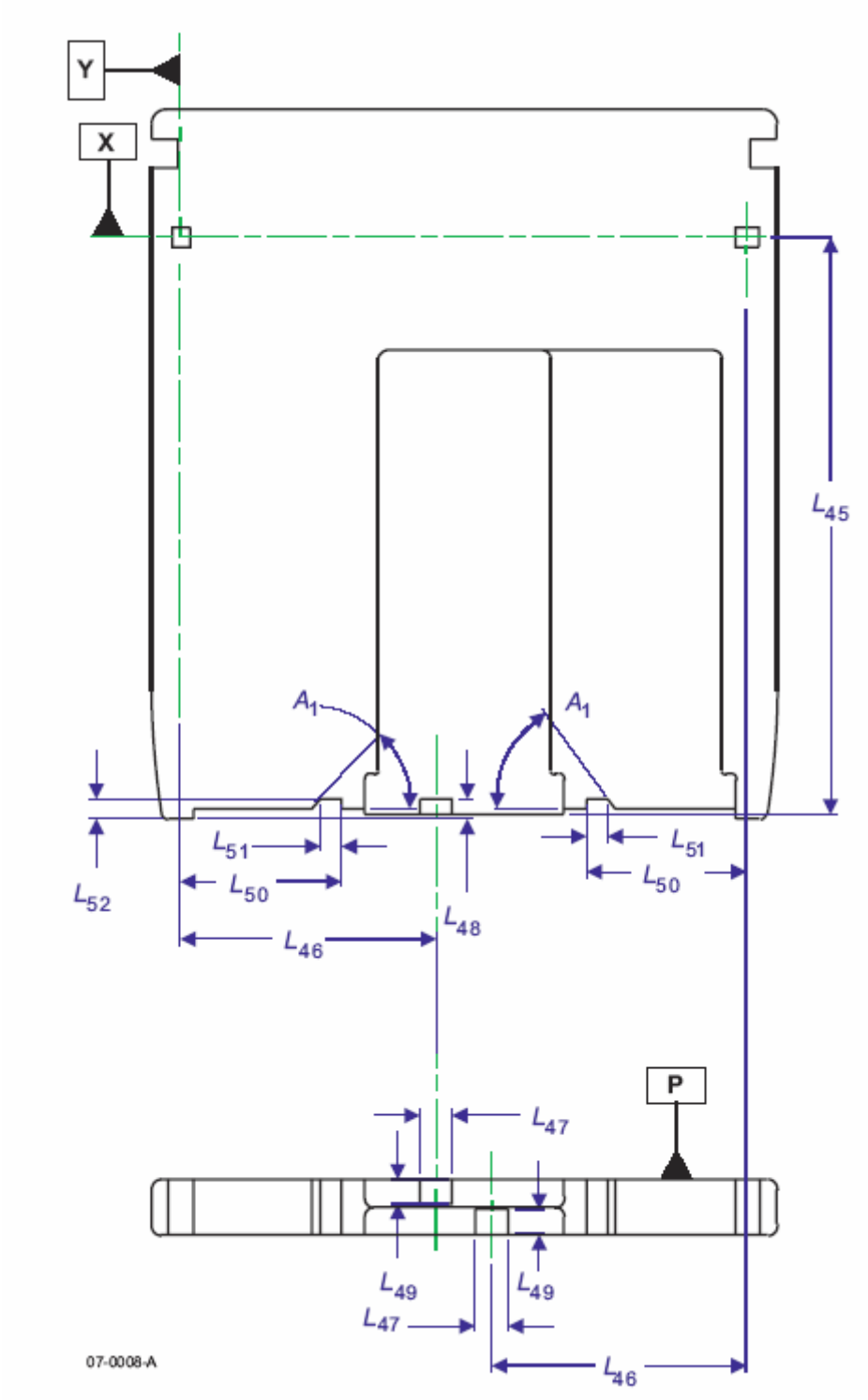

Figure 10 — Shutter opening features

© ISO/IEC 2008 – All rights reserved
Copyright International Organization for Standardization
Provided by IHS under license with ISO
No reproduction or networking permitted without license from IHS
Not for Resale

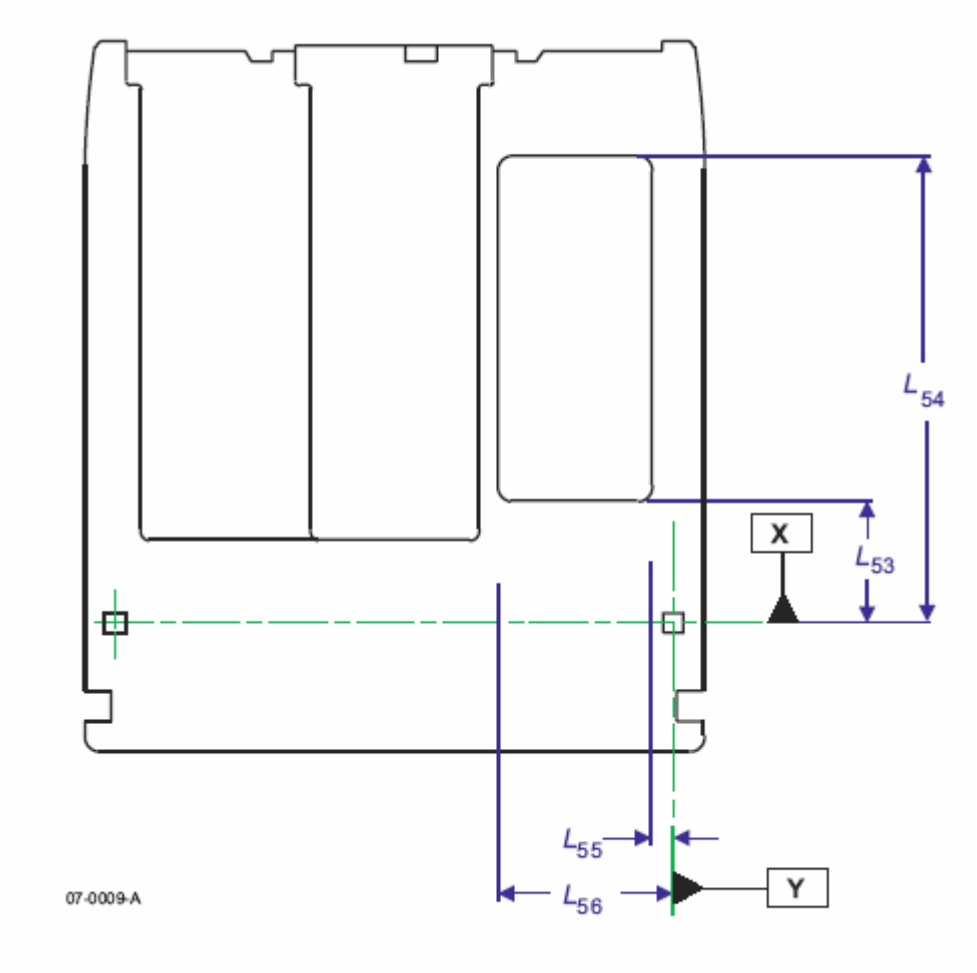

Figure 11.a — User label area (Identical on Side A and Side B)

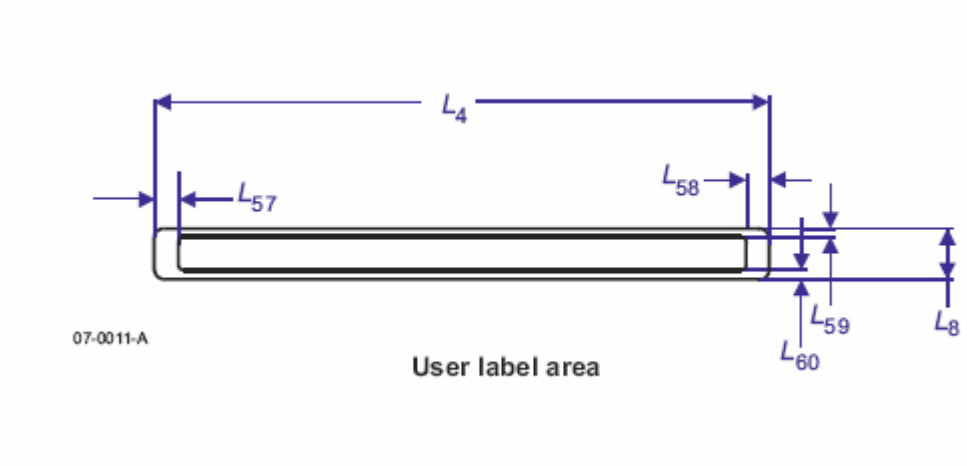

Figure 11.b — User label area on bottom surface

© ISO/IEC 2008 – All rights reserved
Copyright International Organization for Standardization
Provided by IHS under license with ISO
No reproduction or networking permitted without license from IHS
Not for Resale

11 Dimensional, mechanical, and physical characteristics of the disk

11.1 General description of the disk

The disk shall consist of two sides.

Each disk side shall consist of a circular substrate with a hub on one face. The substrate is coated with a recording layer on the same disk face as the hub. The recording layer is protected from environmental influences by a protective 100 µm thick cover layer. The cover layer shall be transparent to allow an optical beam to focus on the recording layer (see 11.5).

The two disk sides shall be assembled with the cover layer facing outwards.

The circular hubs are in the centre of the disk. They interact with the spindle of the drive, and provide the radial centring and the clamping force.

11.2 Reference axis and plane of the disk

Some dimensions of the hub are referred to a Disk Reference Plane D (see Figure 12). The Disk Reference Plane D is different from Case Reference Plane P that is described in 10.3. Plane D is defined by the perfectly flat annular surface of an ideal spindle onto which the Clamping Zone of the disk is clamped, and which is normal to the axis of rotation of this spindle. The reference axis A of the disk passes through the centre of the centre hole of the hub, and is normal to Disk Reference Plane D.

The recording layer is nominally located on Disk Reference Plane D.

11.3 Dimensions of the disk

The dimensions of the disk shall be measured in the test environment. The dimensions of the disk in an operating environment can be estimated from the dimensions specified in this clause.

The outer diameter of the disk shall be 130,0 mm nominal. The tolerance is determined by the movement of the disk inside the case allowed by 12.3 and 12.4.

The total thickness of the disk outside the hub area shall be 2,40 mm min. and 2,80 mm max.

The Clamping Zone is the area on the disk where the clamping mechanism of the optical drive grips the disk and is defined by D_6 and D_7.

The clearance zone extending from the outer diameter of the Clamping Zone (D_6) to the inner diameter of the reflective zone (see Clause 17) shall be excluded from the total thickness requirement; however there shall be no projection from the Disk Reference Plane D in the direction of the optical system of more than 0,2 mm in this zone.

11.3.1 Hub dimensions

The outer diameter of the hub (see Figure 12) shall be

$$D_8 = 25{,}0 \text{ mm} \begin{matrix} +\ 0{,}0 \text{ mm} \\ -\ 0{,}2 \text{ mm} \end{matrix}$$

The height of the hub shall be

$$h_1 = 2{,}2 \text{ mm} \begin{matrix} +\ 0{,}0 \text{ mm} \\ -\ 0{,}2 \text{ mm} \end{matrix}$$

© ISO/IEC 2008 – All rights reserved

Copyright International Organization for Standardization
Provided by IHS under license with ISO
No reproduction or networking permitted without license from IHS
Not for Resale

The diameter of the centre hole of the hub shall be

$$D_9 = 4{,}004\ ^{+\ 0{,}012\ \text{mm}}_{-\ 0{,}000\ \text{mm}}$$

The height of the top of the centring hole at diameter D_9, measured above the Disk Reference Plane D, shall be

h_2 = 1,9 mm min.

The centring length at diameter D_9 shall be

h_3 = 0,5 mm min.

The hole shall have a diameter larger than, or equal to D_9 between the centring length and the Disk Reference Plane D.

There shall be a radius at the rim of the hub at diameter D_9 with height

h_4 = 0,2 mm ± 0,1 mm

At the two surfaces that it intersects, the radius shall be blended to prevent offsets or sharp ridges.

The height of the chamfer at the rim of the hub at diameter D_8 shall be

$$h_5 = 0{,}4\ ^{+\ 0{,}2\ \text{mm}}_{-\ 0{,}2\ \text{mm}}$$

The angle of the chamfer shall be 45°, or a corresponding full radius shall be used.

The outer diameter of the magnetizable ring shall be

D_{10} = 19,0 mm min.

The inner diameter of the magnetizable ring shall be

D_{11} = 8,0 mm max.

The thickness of the magnetizable material shall be

h_6 = 0,5 mm min.

The position of the top of the magnetizable ring relative to the Disk Reference Plane D shall be

$$h_7 = 2{,}2\ ^{+\ 0{,}0\ \text{mm}}_{-\ 0{,}1\ \text{mm}}$$

The outer diameter of the Clamping Zone shall be

D_6 = 35,0 mm min.

The inner diameter of the zone shall be

D_7 = 27,0 mm max.

--`,,```,,,,````-`-`,,`,,`,`,,`---

© ISO/IEC 2008 – All rights reserved
Copyright International Organization for Standardization
Provided by IHS under license with ISO
No reproduction or networking permitted without license from IHS
Not for Resale

11.3.2 Cover layer dimensions

The inner diameter of the cover layer (see Figure 12) shall be

D_{12} = 36,0 ± 1,0 mm

The outer diameter of the cover layer shall extend beyond the start of the Formatted Zone as described in Clause 17.

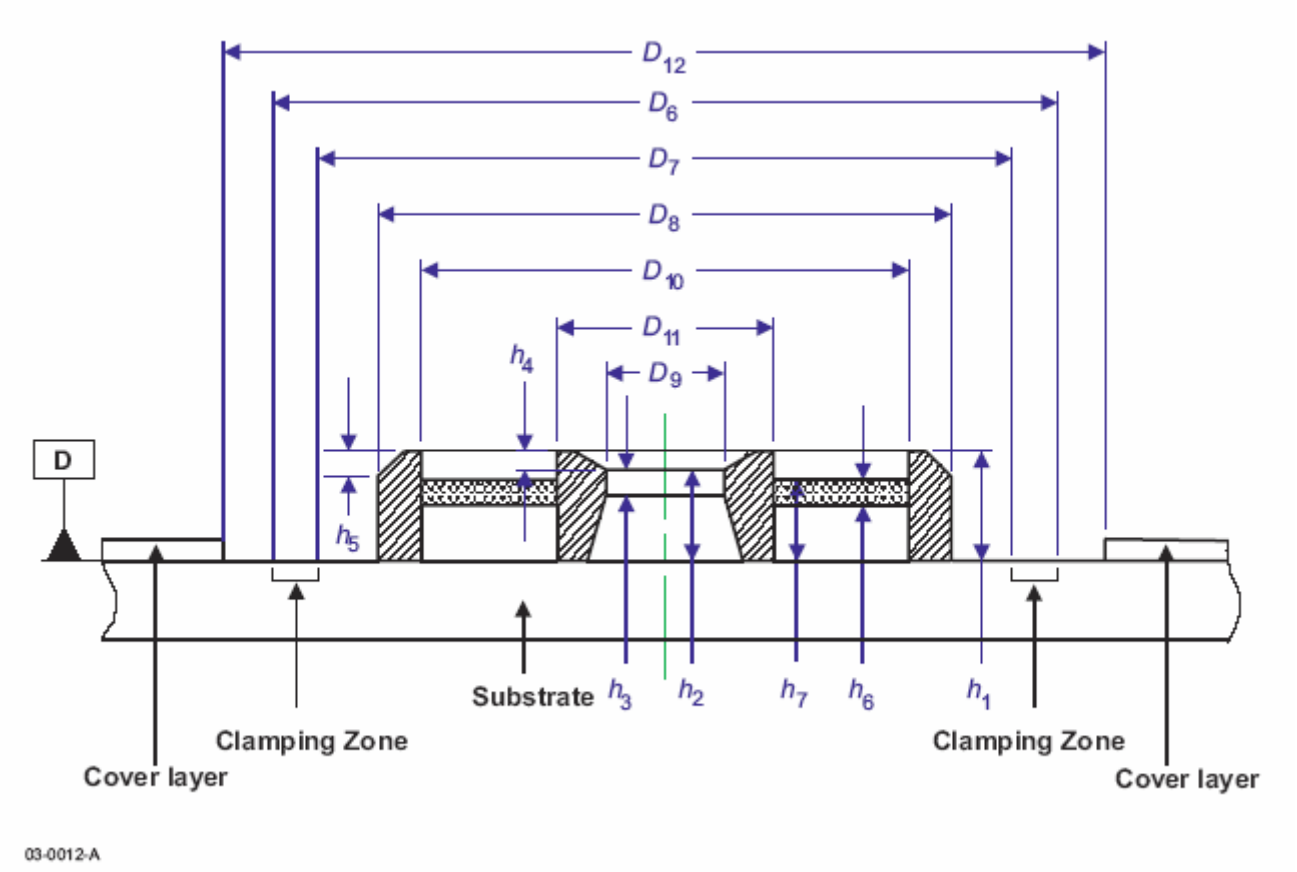

Figure 12 — Hub Dimensions

--`,,```,,,,````-`-`,,`,,`,`,,`---
© ISO/IEC 2008 – All rights reserved
Copyright International Organization for Standardization
Provided by IHS under license with ISO
No reproduction or networking permitted without license from IHS
Not for Resale

11.4 Mechanical characteristics

All requirements in this clause must be met in the operating environment.

11.4.1 Material

The disk shall be made from any suitable materials such that it meets the requirements of this International Standard. The only material properties specified by this International Standard are the magnetic properties of the magnetizable ring in the hub (see 11.3.1) and the optical properties of the cover layer in the Formatted Zone (see 11.5).

11.4.2 Mass

The mass of the disk shall not exceed 60 g.

11.4.3 Moment of inertia

The moment of inertia of the disk relative to axis A shall not exceed 0,13 g·m^2.

11.4.4 Imbalance

The imbalance of the disk relative to axis A shall not exceed 0,01g·m.

11.4.5 Axial deflection

The axial deflection of the disk is measured as the axial deviation of the recording layer. Thus it comprises the tolerances on the thickness of the cover layer, on its index of refraction, and the deviation of the entrance surface from the Disk Reference Plane D.

The deviation of any point of the recording layer from its nominal position, in a direction normal to the Disk Reference Plane D, shall not exceed 0,13 mm in the Formatted Zone for rotational frequencies of the disk as specified in 9.5. The deviation shall be measured by the optical system defined in 9.1.

11.4.6 Axial acceleration

The maximum allowed axial error e_{max} (see Annex Q) shall not exceed 59 nm, measured using the Reference Servo for axial tracking of the recording layer. The rotational frequency of the disk shall be as specified in 9.5. The stationary part of the motor is assumed to be motionless (no external disturbances). The measurement shall be made using a servo with the transfer function

$$H_s(i\omega) = \frac{1}{3} \times \left(\frac{\omega_0}{i\omega} \right)^2 \times \frac{1 + \frac{3i\omega}{\omega_0}}{1 + \frac{i\omega}{3\omega_0}}$$

where $\omega = 2\pi f$, $\omega_0/2\pi = 3\,000$ Hz, $i = \sqrt{-1}$

or any other servo with $|1 + H|$ within the 20 % of $|1 + Hs|$ in the bandwidth of 20 Hz to 150 kHz. Thus, the disk shall not require an acceleration of more than 8,0 m/s^2 at low frequencies from the servo motor of the Reference Servo.

© ISO/IEC 2008 – All rights reserved
Copyright International Organization for Standardization
Provided by IHS under license with ISO
No reproduction or networking permitted without license from IHS
Not for Resale

11.4.7 Radial runout

The radial runout of the tracks in the recording layer in the Formatted Zone is measured as seen by the optical head of the Reference Drive. Thus it includes the distance between the axis of rotation of the spindle and reference axis A, the tolerances on the dimensions between axis A and the location of the track, and effects of non-uniformities in the index of refraction of the cover layer.

The radial runout is the difference between the maximum and the minimum distance of any track from the axis of rotation, measured along a fixed radial line over one physical track of the disk. The radial runout shall not exceed 50 µm as measured by the optical system under conditions of a hub mounted on a perfect sized test fixture shaft, for rotational frequencies of the disk as specified in 9.5.

11.4.8 Radial acceleration

The maximum allowed radial error e_{max} (see Annex Q) shall not exceed 14 nm, measured using the Reference Servo for radial tracking of the tracks. The rotational frequency of the disk shall be as specified in 9.5. The stationary part of the motor is assumed to be motionless (no external disturbances).

The measurement shall be made using a servo with the transfer function

$$H_s(i\omega) = \frac{1}{3} \times \left(\frac{\omega_0}{i\omega} \right)^2 \times \frac{1 + \frac{3i\omega}{\omega_0}}{1 + \frac{i\omega}{3\omega_0}}$$

where $\omega = 2\pi f$, $\omega_0/2\pi = 4\,000$ Hz, $i = \sqrt{-1}$

or any other servo with $|1 + H|$ within the 20 % of $|1 + Hs|$ in the bandwidth of 20 Hz to 150 kHz. Thus, the disk shall not require an acceleration of more than 3,0 m/s^2 at low frequencies from the servo motor of the Reference Servo.

11.4.9 Tilt

The tilt angle, defined as the angle which the normal to the entrance surface, averaged over a circular area of 1 mm diameter, makes with the normal to the Disk Reference Plane D, shall not exceed 2,4 mrad in the radial direction and 1,3 mrad in the tangential direction over the Formatted Zone.

11.4.10 Axial damping

The vibration of the disk clamped to a spindle with a clamping force of 8 N ± 1 N shall have a first rotationally symmetric resonance frequency mode (umbrella mode) between 200 Hz and 250 Hz with a resonance peaking, measured at disk radius 61 mm ± 1 mm, smaller than 21 dB.

11.5 Optical characteristics

11.5.1 Index of refraction

The index of refraction of the cover layer within the Formatted Zone shall be 1,55 ± 0,10.

11.5.2 Thickness

The average thickness of the cover layer over the formatted area shall be within the range 95 to 105 µm.

This thickness shall not vary by more than 2 µm over the formatted area.

© ISO/IEC 2008 – All rights reserved

Copyright International Organization for Standardization
Provided by IHS under license with ISO
No reproduction or networking permitted without license from IHS
Not for Resale

11.5.3 Birefringence

The birefringence value of the cover layer shall be contained as follows:

$|N_p - N_z| \leq 500 \times 10^{-6}$

where N_p is the index of refraction along any direction in the plane of the disk and N_z is the index of refraction normal to the plane of the disk (see Annex R).

11.5.4 Reflectance

11.5.4.1 General

The reflectance R is the value of the reflectance in a Recording Track of the User Zone, measured through the cover layer and does not include the reflectance of the entrance surface.

The nominal value R, of the reflectance, shall be specified by the manufacturer in byte 39 of the SDI Sectors (see 19.2.5).

11.5.4.2 Measured value

The measured value R_m of the reflectance shall be measured under the conditions of 9.2.

Measurements shall be made in the User Zone in any Recording Track.

11.5.4.3 Requirement

The value of reflectance prior to writing at the standard wavelength specified in 9.2 shall lie within the range 17,0 % to 24,5 % for Type RW disks and within the range 12,5 % to 20,5% for Type WORM disks.

The value of reflectance following writing at the standard wavelength specified in 9.2 shall lie within the range 8,0 % to 13,0 % for Type RW disks and within the range 8,5 % to 12,5 % for Type WORM disks.

At any point in the User Zone, prior to writing or following writing on Type RW or Type WORM disks, the measured reflectance R_m shall meet the following requirement:

$$R\ (1 - 0{,}22) \leq (R_{m\ max} + R_{m\ min}) / 2 \leq R\ (1 + 0{,}22)$$

where $R_{m\ max}$ and $R_{m\ min}$ are the maximum and minimum values of the measured reflectance in the User Zone.

This requirement specifies the acceptable range for R_m, for all disks within the same value R. Additionally; the variation of R_m within one revolution shall meet the requirement:

$$(R_{m\ max} - R_{m\ min}) / (R_{m\ max} + R_{m\ min}) \leq 0{,}10$$

12 Interface between cartridge and drive

12.1 Clamping method

When the cartridge is inserted into the drive, the shutter of the case is opened and the drive spindle engages the disk. The disk is held against the spindle by an axial clamping force, provided by the magnetizable material in the hub and the magnets in the spindle. The radial positioning of the disk is provided by the centring of the axis of the spindle in the centre hole of the hub. A turntable of the spindle shall support the disk in its Clamping Zone, determining the axial position of the disk in the case.

© ISO/IEC 2008 – All rights reserved
Copyright International Organization for Standardization
Provided by IHS under license with ISO
No reproduction or networking permitted without license from IHS
Not for Resale

12.2 Clamping force

The clamping force exerted by the spindle shall be less than 14 N.

The adsorbent force measured by the test device specified in Annex F shall be in the range of 8,0 N to 12,0 N.

12.3 Capture cylinder

The capture cylinder (see Figure 13) is defined as the volume in which the spindle can expect the centre of the hole of the hub to be at the maximum height of the hub, just prior to capture. The size of the cylinder limits the allowable play of the disk inside its cavity in the case. This cylinder is referred to perfectly located and perfectly sized alignment and location pins in the drive, and includes tolerances of dimensions of the case and the disk between the pins mentioned and the centre of the hub. The bottom of the cylinder is parallel to the Case Reference Plane P, and shall be located at a distance of

L_{61} = 0,5 mm min.

above the Case Reference Plane P of Side B of the case when Side A of the disk is to be used. The top of the cylinder shall be located at a distance of

L_{62} = 4,3 mm max.

above the same Case Reference Plane P, i.e. that of Side B. The diameter of the cylinder shall be

D_{13} = 3,0 mm max.

Its centre shall be defined by the nominal values of L_{40} and L_{44} (see 10.5.9).

12.4 Disk position in operating condition

When the disk is in the operating condition (see Figure 13) within the drive, the position of the active recording layer shall be

L_{63} = 4,15 mm ± 0,15 mm

above the Case Reference Plane P of that side of the case that faces the optical system.

Moreover, the torque to be exerted on the disk in order to maintain a rotational frequency of 35 Hz shall not exceed 0,01 N·m, when the axis of rotation is within a circle of diameter

D_{14} = 0,2 mm max.

and a centre given by the nominal values of L_{40} and L_{44} (see 10.5.9).

--`,,```,,,,````-`-`,,`,,`,`,,`---

© ISO/IEC 2008 – All rights reserved

Copyright International Organization for Standardization
Provided by IHS under license with ISO
No reproduction or networking permitted without license from IHS
Not for Resale

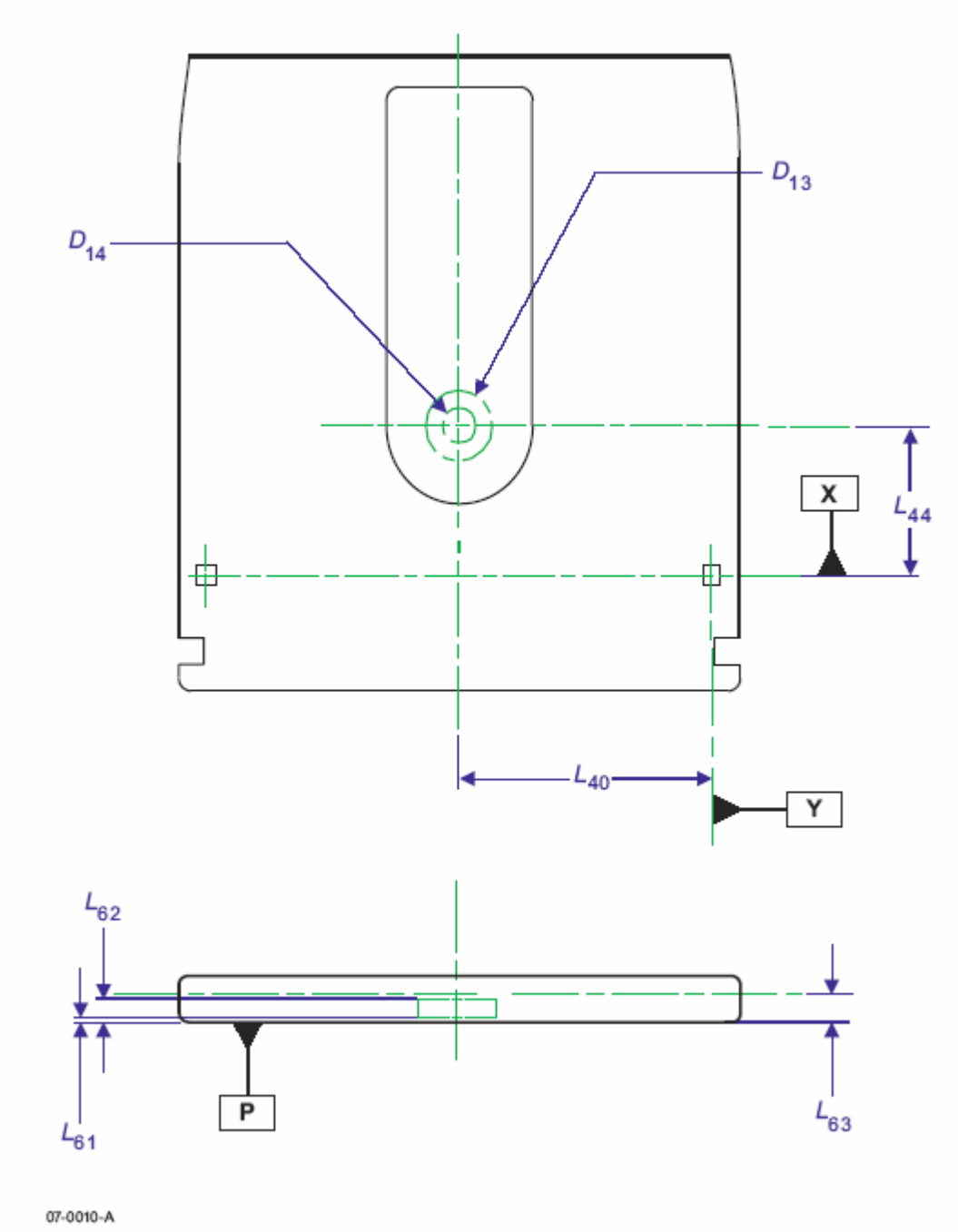

Figure 13 — Capture cylinder

Copyright International Organization for Standardization
Provided by IHS under license with ISO
No reproduction or networking permitted without license from IHS
Not for Resale
© ISO/IEC 2008 – All rights reserved

Section 3 — Format of information

13 Physical Track Layout

13.1 Groove

The Formatted Zone shall contain a spiral wobbled groove intended for the continuous servo method (see Clause 23).

The groove shall be a trench-like feature, the bottom of which is located closer to the optical beam's entrance surface than the land between the grooves. The shape of the groove shall be determined by the requirements in Clause 23.

13.2 Direction of spiral

The groove shall spiral inward from the outer diameter to the inner diameter, clockwise as viewed from the entrance surface.

13.3 Groove pitch

The groove pitch defined as the distance between adjacent grooves centrelines, measured in a radial direction shall be:

320 nm ± 5% for Type WORM media,

350 nm ± 5% for Type RW media.

The grooves pitch averaged over the entire formatted area shall be:

320 nm ± 0,1% for Type WORM media,

350 nm ± 0,1% for Type RW media.

13.4 Groove wobble

The groove shall be sinusoidally wobbled with a period of 120 Channel bits. The number of wobble periods per revolution shall be the same within each Data Zone defined in 14.1.

The frequency of the wobble shall be constant within each Data Zone.

The wobble shall contain Sector Format information as specified in Clause 15.3. Its characteristics shall comply with the specifications of Clause 23. The corresponding amplitude of peak-to-peak displacement of the wobble shall be approximately 11 nm.

14 General Description of the Formatted Area

The Formatted Area contains all information on the disk relevant for data interchange. This information comprises embossed tracking and addressing provisions, and possibly user written data.

The entire Formatted Area shall be reflective and have the same recording layer.

--`,,```,,,,````-`-`,,`,,`,`,,`---

© ISO/IEC 2008 – All rights reserved

Copyright International Organization for Standardization
Provided by IHS under license with ISO
No reproduction or networking permitted without license from IHS
Not for Resale

14.1 Division of the Formatted Area

The Formatted Area shall be divided into Data Zones at the radii specified in Tables 2 and 3, each Data Zone having a fixed number of Sectors per Track. All Formatted Area features shall be defined in term of Channel bits (see Tables 4 and 5).

The Sectors shall contain the same number of Channel-bits and the same number of wobble periods. The period of the wobble shall be 120 times the channel clock period for both Type RW and Type WORM media.

Each Data Zone shall be divided in bands.

In Zone 26 of the WORM format (Table 2) there are more than 8 192 tracks. As this exceeds the counting possibility of the 13 available track numbering bits (see 15.2), the Track Number shall be reset to 0000, while the Zone Number shall be incremented to 27 when the track-counter reaches 8 192. This Zone 27 shall have the same format as Zone 26. It shall not be used for data interchange.

14.2 Physical Track / Radial Alignment

Each 360° groove revolution shall contain a non-integer number of wobble-periods as shown on Figure 14. Every full revolution contains an extra quarter wobble-period, thus creating a 90 wobble-phase offset between adjacent groove turns. This 90° shift amounts to 30 Channel bits, with a tolerance of less than ± 2 Channel bits. The phase-shift relates to the ADIP format specified in 15.3.

The Physical Track shall be as defined in Figure 14. A Physical Track corresponds to a 360° revolution minus the said quarter wobble-period.

The extra quarter wobble is part of the next track even though it still is on the present revolution. Hence the length of a Track is shorter than one revolution by 30 Channel bits. A Track does contain an integer number of Sectors. See Figure 14. The Track-to-Track phase-shift of 30 Channel bits shall not exceed the tolerance of ± 2 Channel bits.

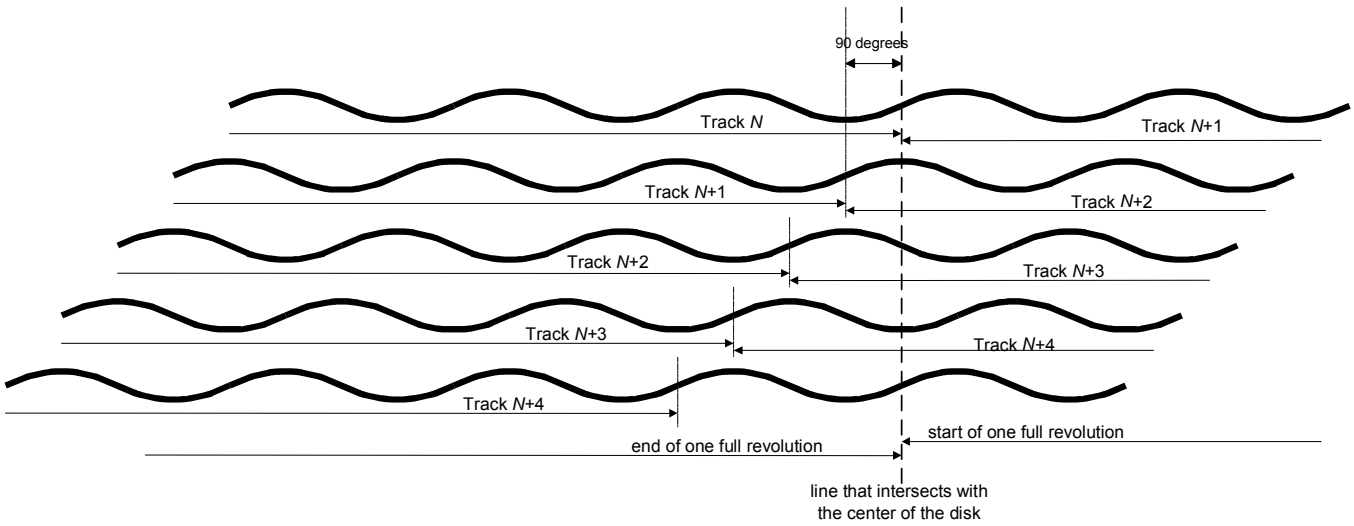

Figure 14 — Definition of track and revolution

© ISO/IEC 2008 – All rights reserved
Copyright International Organization for Standardization
Provided by IHS under license with ISO
No reproduction or networking permitted without license from IHS
Not for Resale

Table 2 — Zone format of Type WORM media

Zone number	Radius (mm)		Tracks per Zone	Sectors per Tracks	Sectors per Zone	Track number		Wobbles per revolution
	Outer	Inner				Outer	Inner	
0	62,50	61,51	3 083	49	151 057	0	3 082	48 216,25
1	61,51	60,08	4 486	48	215 328	0	4 485	47 232,25
2	60,08	58,65	4 461	47	209 667	0	4 460	46 248,25
3	58,65	57,23	4 436	46	204 056	0	4 435	45 264, 25
4	57,23	55,82	4 411	45	198 495	0	4 410	44 280,25
5	55,82	54,42	4 386	44	192 984	0	4 385	43 296,25
6	54,42	53,02	4 361	43	187 523	0	4 360	42 312,25
7	53,02	51,63	4 337	42	182 154	0	4 336	41 328,25
8	51,63	50,37	3 952	41	162 032	0	3 951	40 344,25
9	50,37	49,10	3 947	40	157 880	0	3 946	39 360,25
10	49,10	47,84	3 941	39	153 699	0	3 940	38 376,25
11	47,84	46,58	3 936	38	149 568	0	3 935	37 392,25
12	46,58	45,32	3 930	37	145 410	0	3 929	36 408,25
13	45,32	44,07	3 925	36	141 300	0	3 924	35 424,25
14	44,07	42,81	3 919	35	137 165	0	3 918	34 440,25
15	42,81	41,56	3 914	34	133 076	0	3 913	33 456,25
16	41,56	40,31	3 908	33	128 964	0	3 907	32 472,25
17	40,31	39,06	3 903	32	124 896	0	3 902	31 488,25
18	39,06	37,81	3 897	31	120 807	0	3 896	30 504,25
19	37,81	36,57	3 892	30	116 760	0	3 891	29 520,25
20	36,57	35,33	3 887	29	112 723	0	3 886	28 536, 25
21	35,33	34,08	3 881	28	108 668	0	3 880	27 552,25
22	34,08	32,84	3 876	27	104 652	0	3 875	26 568,25
23	32,84	31,60	3 870	26	100 620	0	3 869	25 584,25
24	31,60	30,37	3 865	25	96 625	0	3 864	24 600,25
25	30,37	29,13	3 860	24	92 640	0	3 859	23 616,25
26	29,13	26,40	8 537	23	196 351	0	8 536	22 632,25

Table 3 — Zone format of Type RW media

Zone number	Radius (mm)		Tracks per Zone	Sectors per Tracks	Sectors per Zone	Track number		Wobbles per revolution
	Outer	Inner				Outer	Inner	
0	62,50	61,40	3 150	51	160 650	0	3 149	50 388,25
1	61,40	59,77	4 642	50	232 100	0	4 641	49 400,25
2	59,77	58,17	4 586	49	224 714	0	4 685	48 412,25
3	58,17	56,58	4 530	48	217 440	0	4 529	46 436,25
4	55,58	55,01	4 475	47	210 325	0	4 474	44 280,25
5	55,01	53,47	4 420	46	203 320	0	4 419	45 448,25
6	53,47	51,94	4 366	45	196 470	0	4 365	44 460,25
7	51,94	50,43	4 312	44	189 728	0	4 311	43 472,25
8	50,43	48,94	4 259	43	183 137	0	4 258	42 484,25
9	48,94	47,75	3 377	42	141 834	0	3 376	40 508,25
10	47,75	46,57	3 371	41	138 211	0	3 370	38 376,25
11	46,57	45,40	3 365	40	134 600	0	3 364	39 520,25
12	45,40	44,22	3 358	39	145 410	0	3 929	36 408,25
13	44,22	43,05	3 352	38	127 376	0	3 351	37 544,25
14	43,05	41,87	3 346	37	123 802	0	3 345	36 556,25
15	41,87	40,71	3 340	36	120 240	0	3 339	35 568,25
16	40,71	39,54	3 334	35	116 690	0	3 333	34 580,25
17	39,54	38,37	3 328	34	113 152	0	3 327	33 592,25
18	38,37	37,21	3 322	33	109 626	0	3 321	32 604,25
19	37,21	36,05	3 316	32	106 112	0	3 315	31 616,25
20	36,05	34,89	3 310	31	102 610	0	3 309	30 628, 25
21	34,89	33,73	3 304	30	99 120	0	3 303	29 640,25
22	33,73	32,58	3 298	29	95 642	0	3 297	28 652,25
23	32,58	31,43	3 292	28	92 176	0	3 291	27 664,25
24	31,43	30,27	3 286	27	88 722	0	3 285	26 676,25
25	30,27	29,13	3 279	26	85 254	0	3 278	25 688,25
26	29,13	26,40	7 789	25	194 725	0	7 788	24 700,25

--`,,```,,,,````-`-`,,`,,`,`,,`---

© ISO/IEC 2008 – All rights reserved

Copyright International Organization for Standardization
Provided by IHS under license with ISO
No reproduction or networking permitted without license from IHS
Not for Resale

Table 4 — Nominal Channel bit and wobble timing for Type WORM media at a rotation speed of 29,9 Hz

Zone number	Channel bit length		Channel clock		Wobble clock		User data rate
	Outer (mm)	Inner (mm)	Frequency (MHz)	Period (ns)	Frequency (KHz)	Period (µs)	(Mbyte/s)
0	67,87	66,80	173,000	5,78	1 441,67	0,694	12,00
1	68,19	66,60	169,469	5,90	1 412,24	0,708	11,76
2	68,02	66,40	165,939	6,03	1 382,82	0,723	11,51
3	67,84	66,20	162,408	6,16	1 353,40	0,739	11,27
4	67,67	66,00	158,878	6,29	1 323,98	0,755	11,02
5	67,50	65,81	155,347	6,44	1 294,56	0,772	10,78
6	67,34	65,61	151,816	6,59	1 265,14	0,790	10,53
7	67,17	65,41	148,286	6,74	1 235,71	0,809	10,29
8	67,01	65,37	144,755	6,91	1 206,29	0,829	10,04
9	67,00	65,32	141,225	7,08	1 176,87	0,850	9,80
10	67,00	65,28	137,694	7,26	1 147,45	0,871	9,56
11	66,99	65,23	134,163	7,45	1 118,03	0,894	9,31
12	66,99	65,18	130,633	7,66	1 088,61	0,919	9,06
13	66,99	65,14	127,102	7,87	1 059,19	0,944	8,82
14	67,00	65,09	123,572	8,09	1 029,76	0,971	8,57
15	67,01	65,05	120,041	8,33	1 000,34	1,000	8,33
16	67,02	65,00	116,510	8,58	970,92	1,030	8,08
17	67,03	64,95	112,980	8,85	941,50	1,062	7,84
18	67,05	64,91	109,449	9,14	912,08	1,096	7,59
19	67,07	64,86	105,919	9,44	882,66	1,133	7,35
20	67,10	64,82	102,388	9,77	853,23	1,172	7,10
21	67,13	64,77	98,857	10,12	823,81	1,214	6,86
22	67,17	64,73	95,327	10,49	794,39	1,259	6,61
23	67,21	64,68	91,796	10,89	764,97	1,307	6,37
24	67,27	64,63	88,266	11,33	735,55	1,360	6,12
25	67,33	64,59	84,735	11,80	706,13	1,416	5,88
26	67,40	61,08	81,205	12,31	676,70	1,478	5,62

Table 5 — Nominal Channel bit and wobble timing for Type RW media at a rotation speed of 28,73 Hz

Zone number	Channel bit length		Channel clock		Wobble clock		User data rate
	Outer (mm)	Inner (mm)	Frequency (MHz)	Period (ns)	Frequency (KHz)	Period (µs)	(Mbyte/s)
0	64,95	63,80	173,719	5,76	1 447,65	0,691	12,00
1	65,08	63,35	170,312	5,87	1 419,27	0,705	11,77
2	64,65	62,91	166,906	5,99	1 390,88	0,719	11,53
3	64,22	62,47	163,500	6,12	1 362,50	0,734	11,30
4	63,80	62,03	160,094	6,25	1 334,11	0,750	11,06
5	63,88	61,60	156,687	6,38	1 305,73	0,766	10,83
6	62,97	61,17	153,281	6,52	1 277,34	0,783	10,59
7	62,56	60,74	149,875	6,67	1 248,96	0,801	10,36
8	62,15	60,31	146,469	6,83	1 220,57	0,819	10,12
9	61,75	60,26	143,062	6,99	1 192,19	0,839	9,88
10	61,73	60,20	139,656	7,16	1 163,80	0,859	9,65
11	61,71	60,15	136,250	7,34	1 135,42	0,881	9,41
12	61,69	60,09	132,844	7,53	1 107,03	0,903	9,18
13	61,67	60,03	129,438	7,73	1 078,65	0,927	8,94
14	61,66	59,98	126,031	7,93	1 050,26	0,952	8,71
15	61,64	59,92	122,625	8,15	1 021,88	0,979	8,47
16	61,63	59,87	119,219	8,39	993,49	1,007	8,24
17	61,63	59,81	115,813	8,63	965,11	1,036	8,00
18	61,62	59,76	112,406	8,90	936,72	1,068	7,77
19	61,62	59,70	109,000	9,17	908,33	1,101	7,53
20	61,63	59,64	105,594	9,47	879,95	1,136	7,30
21	61,63	59,59	102,188	9,79	851,56	1,174	7,06
22	61,64	59,53	98,781	10,12	823,18	1,215	6,83
23	61,66	59,48	95,375	10,48	794,79	1,258	6,59
24	61,68	59,42	91,969	10,87	766,41	1,305	6,35
25	61,71	59,37	88,563	11,29	738,02	1,355	6,12
26	61,74	55,96	85,157	11,74	709,64	1,409	5,88

Copyright International Organization for Standardization
Provided by IHS under license with ISO
No reproduction or networking permitted without license from IHS
Not for Resale
© ISO/IEC 2008 – All rights reserved

15 Preformatted Sector format

15.1 Physical Block Address (PBA)

Each Data Sector shall be identified using a unique Physical Block Address (PBA).

The PBA embossed addresses are separated into three parts, a Zone Number, a Track Number and a Sector Number, together called “ZTS”. In each Data Zone the Track Number starts with 0000 at the outer radius of the Zone. Each track starts with Sector number 0. The ZTS info is converted to PBA’s by the drive’s controller.

PBA number 0 shall be located at radius 62,50 mm ± 0,10mm, with Zone Number = 0, Track Number = 0 and Sector Number = 0.

ADIP errors, due to media defects, will occur on a Nibble basis (1 nibble = 4 bits), in relation with the Nibble ADIP encoding (see 15.3.)

The conversion from ZTS to PBA shall be:

$$PBA = (Z * 8\,192 * 64) + (T * (SPT0 - Z) + S)$$

and the conversion from PBA to ZTS:

$$Z = \text{int}\,[PBA / (8\,192 * 64)]$$

$$T = \text{int}\,[(PBA - (Z * 8\,192 * 64)) / (SPT0 - Z)]$$

$$S = \text{int}\,[(PBA - ((Z * 8\,192 * 64) + (T * (SPT0 - Z))))]$$

where the notation int [*x*] denotes the largest integer not greater than *x.*

NOTES The term (8 192 ∗ 64) can be replaced by a shift of 19 bits in the appropriate direction.

The variable SPT0 is equal to the number of Sectors per Physical Track in Data Zone 0 (at the outer radius).

15.2 Sector layout

Each Data Sector contains the following ADIP information:

Zone number of 5 bits (0–31)

Track Number of 13 bits (0–8 192). This is repeated 5 times in each Sector.

Sector number of 6 bits (0–63). This is repeated 3 times in each Sector.

4 bits reserved for future purposes, like e.g. the layer number in multi layer media.

Two Sync Frames with unique patterns (see 15.3.2).

The above ADIP information is organized within each Data Sector as shown on Figure 15.a and 15.b.

--`,,```,,,,````-`-`,,`,,`,`,,`---

© ISO/IEC 2008 – All rights reserved
Copyright International Organization for Standardization
Provided by IHS under license with ISO
No reproduction or networking permitted without license from IHS
Not for Resale

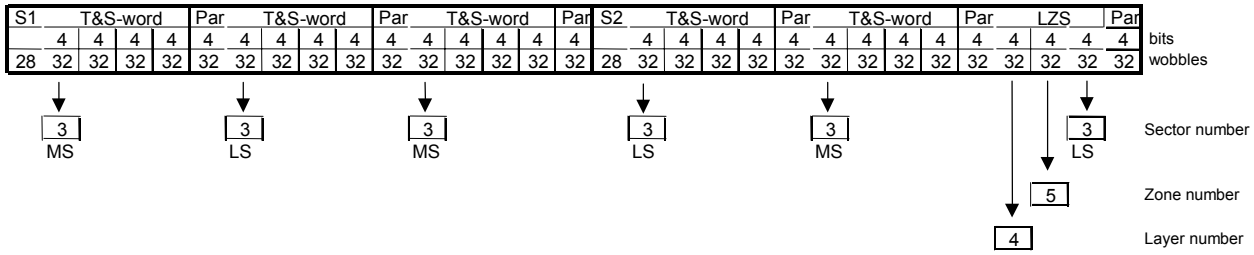

Figure 15.a — ADIP layout for Type WORM media.

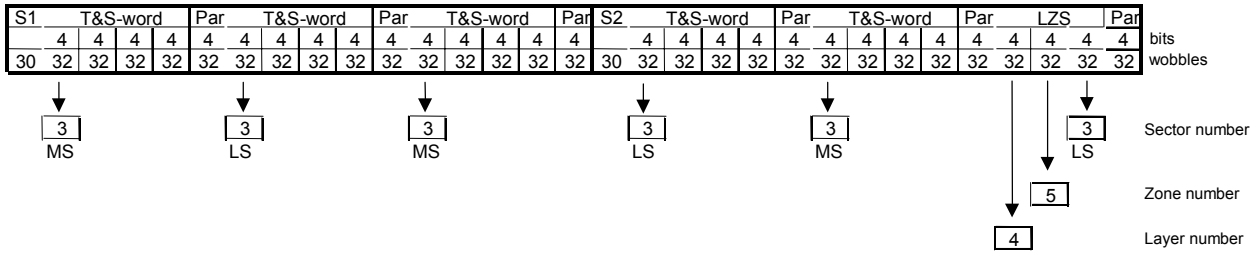

Figure 15.b — ADIP layout for Type RW media.

The first row shows the function of a field.

The second row shows the number of address-bits per frame.

The third row shows the number of wobble-cycles per frame.

The T&S-word contains 13 bits for the Track number and 3 bits for the Sector number.

The LZS number contains 3 bits for the Sector number, 5 bits for the Zone number and 4 bits for the Layer number (or other future purposes).

The only difference between Types WORM and RW is in the length of the two Sync Frames. This minor difference is necessary to facilitate the different Data Sector lengths in Channel-bits for the two media types.

This results in a different number of wobble periods per Sector:

WORM: 984

RW: 988

15.2.1 Zone Number

The Zone number is in bits 3–7 of the LZS number.

The Zone Number may also be determined by the wobble-PLL, by means of a frequency measurement, thus providing two independent sources of information about the actual Zone Number.

© ISO/IEC 2008 – All rights reserved
Copyright International Organization for Standardization
Provided by IHS under license with ISO
No reproduction or networking permitted without license from IHS
Not for Resale

15.2.2 Track Number

Bits 0–12 of the T&S-word have been allocated for the Track Number that starts at 0000 at the outer radius of each Data Zone. The Track Number is repeated 5 times in each Sector, such that 2 defective Track Numbers still leave a majority (3) of good matching Track Numbers for positive qualification.

15.2.3 Sector Number

The 6-bits Sector Number (0–63) is split into multiple copies of MS and LS groups. These MS and LS groups are contained in the upper 3 bits of the five T&S-words. One LS-group is in bits 0–2 of the LZS number.

15.2.4 Parity generation

The parity nibbles (Par) are computed with the “checksum” method. The hexadecimal values of the address nibbles are summed and then truncated to the 4 least significant bits.

Examples:

Address value	Checksum	Parity value
(10D7)	(= 1 + 0 + D + 7 = 15)	(5)
(0064)	(= 0 + 0 + 6 + 4 = 0A)	(A)

15.3 Wobble Amplitude modulation for ADIP (WAMFA)

The wobble of the pregroove is used to store address information. A Phase Lock Loop locks to this wobble for write/read synchronization purposes. In order to provide address information, some of the wobbles have inverted polarity (See Figure 16). The latter are labelled IW (inverted wobble) while normal wobbles are labelled NW.

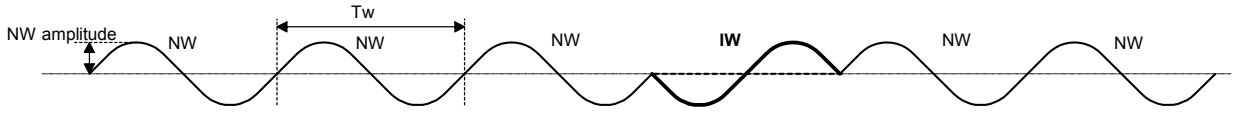

Figure 16 — Inverted wobbles (IW) and Normal wobbles (NW)

Positive signal corresponds to a radial deviation towards the outer radius.

15.3.1 WAMFA conversion table code

The location of the IW translates into 4 bits (1 Nibble) of address information for the PBA. An Address Frame is defined as a group of consecutive NW’s with one IW. The Frame-length may be longer than the number of wobbles required for the encoding of 1 Nibble.

Each Nibble of Address information (0–F) converts to one Inverted Wobble (IW) at a specific location within each Address Frame, as shown in Table 6. Normal Wobbles (NW’s) are represented by blank cells. Each Address Frame contains 32 wobbles.

--`,,```,,,,````-`-`,,`,,`,`,,`---

© ISO/IEC 2008 – All rights reserved

Copyright International Organization for Standardization
Provided by IHS under license with ISO
No reproduction or networking permitted without license from IHS
Not for Resale

Table 6 — Conversion table for the WAMFA code

Nibble value	Wobble number																														
	0	1	2	3	4	5	6	7	8	9	10	11	12	13	14	15	16	17	18	19	20	21	22	23	24	25	26	27	28	29	30	31
(0)	IW																														
(1)		IW																													
(2)			IW																												
(3)				IW																											
(4)					IW																										
(5)						IW																									
(6)							IW																								
(7)								IW																							
(8)									IW																						
(9)										IW																					
(A)											IW																				
(B)												IW																			
(C)													IW																		
(D)														IW																	
(E)															IW																
(F)																IW															

15.3.2 WAMFA synchronization

Synchronization is established with Sync-Frames that contain two IW's separated by a unique distance. Each Data-Sector shall contain two such Sync-Frames.

Table 7 — Sync-Frames for Type WORM media

	Wobble number																											
	0	1	2	3	4	5	6	7	8	9	10	11	12	13	14	15	16	17	18	19	20	21	22	23	24	25	26	27
Sync1	IW													IW														
Sync2		IW												IW														

Table 8 — Sync-Frames for Type RW media

	Wobble number																														
	0	1	2	3	4	5	6	7	8	9	10	11	12	13	14	15	16	17	18	19	20	21	22	23	24	25	26	27	28	29
Sync1	IW													IW																
Sync2		IW												IW																

15.4 Phase-shifted wobbles

The 90° wobble-phase shift as specified in 14.2 results in the situation as shown in the Figure 17 (wobbles adjacent on the two sides of the NW's have opposite phase).

© ISO/IEC 2008 – All rights reserved
Copyright International Organization for Standardization
Provided by IHS under license with ISO
No reproduction or networking permitted without license from IHS
Not for Resale

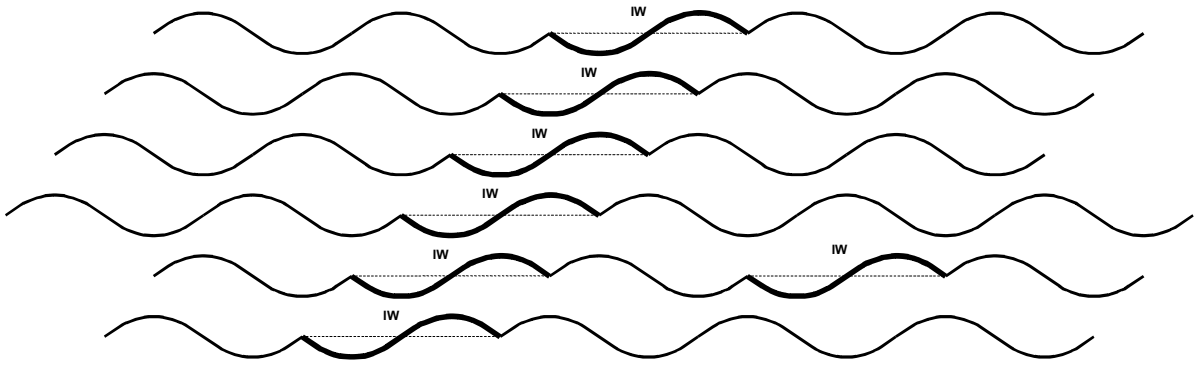

Figure 17 — Wobbles on adjacent tracks with 90° phase-shift

16 Sector layout for recorded data

16.1 Sector layout for recorded data

Data shall be recorded within the space of a preformatted Sector as shown in Tables 9, 10, and Figures 18, 19.

Table 9 — Sector layout for Type WORM media

	Channel bits
VAP-GAP	780
Preamble	648
Sync field	24
Training field	48
Resync fields	3 024
Recover Burst 0	228
Recover Burst 1	228
Data + ECC (9 424 bytes)	113 088
Postamble	12
Total Sector	118 080

© ISO/IEC 2008 – All rights reserved

Copyright International Organization for Standardization
Provided by IHS under license with ISO
No reproduction or networking permitted without license from IHS
Not for Resale

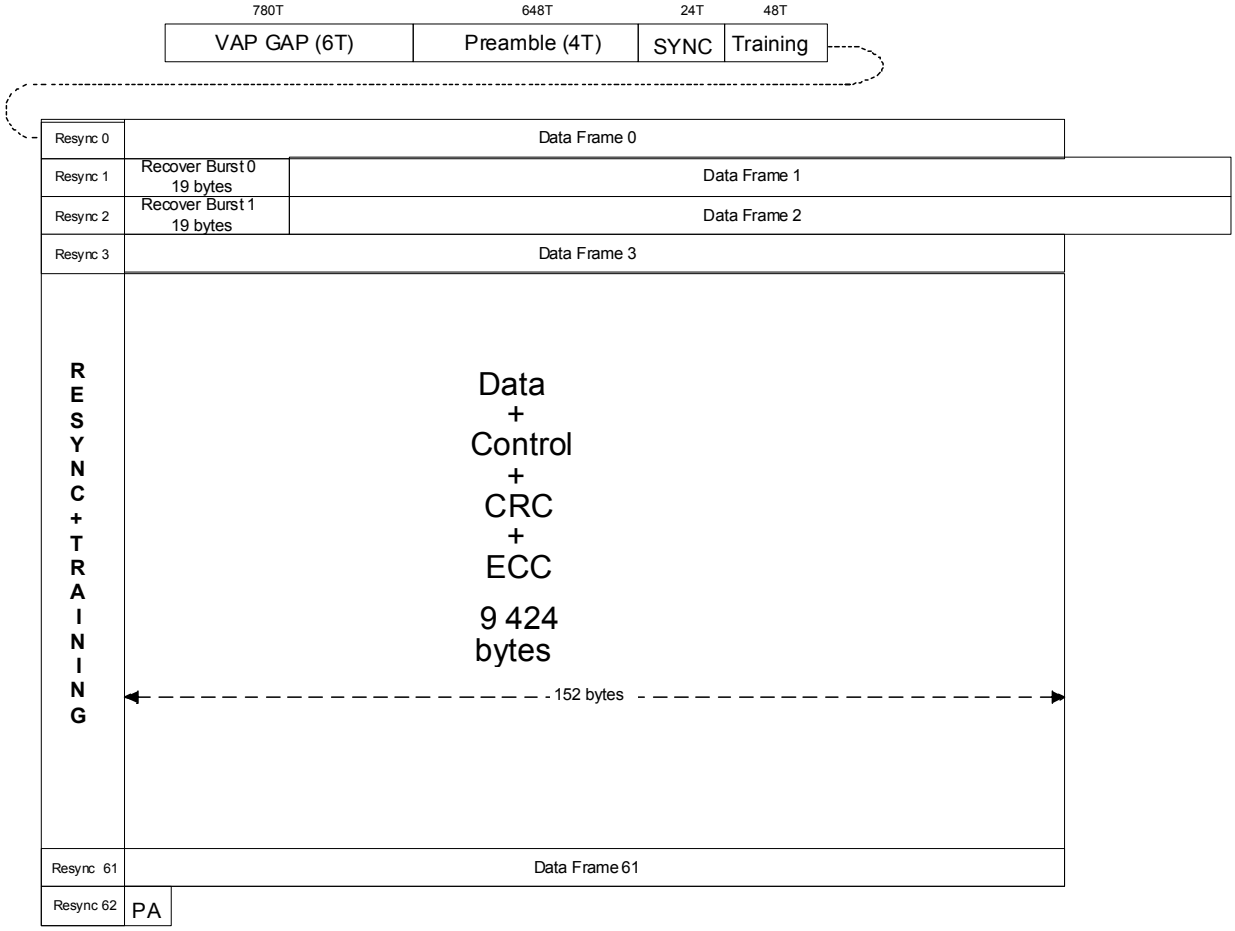

Figure 18 — Sector format for Type WORM media

Table 10 — Sector layout for Type RW media

	Channel bits
Guard field 1	496
Preamble	852
Sync field	24
Training field	48
Resync fields	3 072
Recover Burst 0	228
Recover Burst 1	228
Data + ECC (9 424 bytes)	113 088
Postamble	12
Guard field 2	256
SPS Allocation	256
Total Sector	118 560

--`,,```,,,,````-`-`,,`,,`,`,,`---

© ISO/IEC 2008 – All rights reserved
Copyright International Organization for Standardization
Provided by IHS under license with ISO
No reproduction or networking permitted without license from IHS
Not for Resale

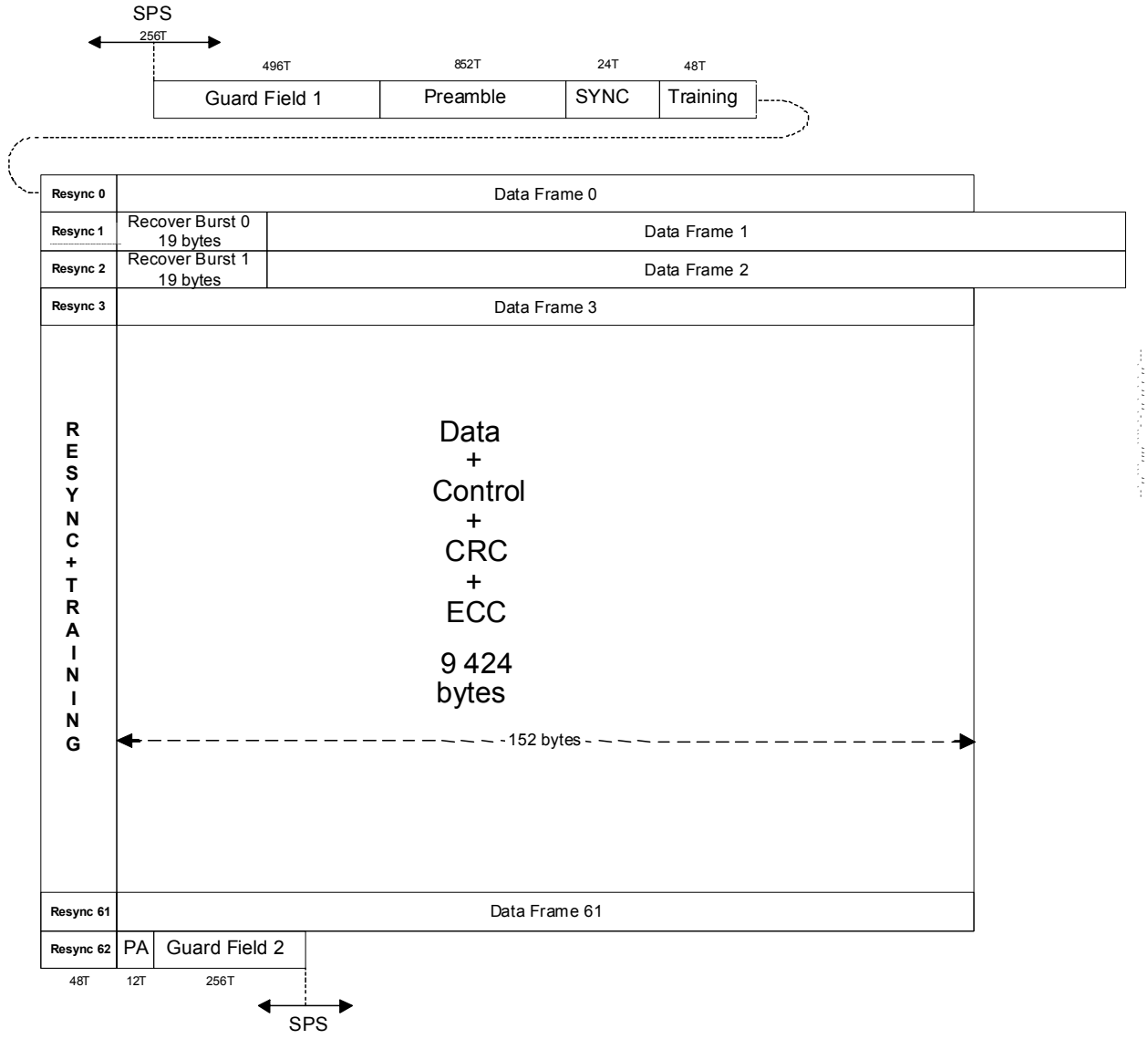

Figure 19 — Sector format for Type RW media

16.2 Guard fields

There shall be two Guard fields in each Sector of Type RW media. These fields are not included for Sectors of Type WORM media. Guard field 1 has a length of 492 Channel bits. Guard field 2 has a length of 256 Channel bits.

The Guard fields shall be written with a fixed tone of 2T runs. The contents of the Guard fields shall be ignored in interchange.

16.3 Gap and VAP flag

There is a small gap between recorded Sectors. When the drives are writing long extents (i.e. multiple consecutive Sectors), these gaps allow periodic Read-Power measurements and control.

16.3.1 Type WORM media

For Type WORM media the gap length is specified in Table 9.

© ISO/IEC 2008 – All rights reserved

Copyright International Organization for Standardization
Provided by IHS under license with ISO
No reproduction or networking permitted without license from IHS
Not for Resale

On Type WORM media the gaps are filled with the Verify And Protect (VAP) flags during the Verify Pass. A recorded VAP flag contains a tone of 6T runs.

During writing the presence of a VAP flag tells the drive that a Sector has been previously written and verified. This protects Sectors from accidental over-writing on Type WORM media. Prior to writing any data to a Sector the gap in front of the Preamble is checked for the presence of a VAP flag. If the VAP flag is detected then the write of the Sector is terminated before the start of the Preamble. Essentially the write is then cancelled.

16.3.2 Type RW media

On Type RW media the gap is provided by the SPS allocation (See Table 10 and 16.8). It should be noted that there may not be a gap between Sectors of different write-extents. However, the Guard fields ensure that there is never an issue with unintentionally overwritten data due to jitter of the Wobble PLL.

16.4 Preamble

Each Data Sector has a preamble that allows the drive to set up some Read-Channel settings before the RLL(1,7) encoded data arrives. The preamble shall be written by the drive when data is recorded in the Sector. The Preamble pattern is a tone of 4T runs. The Preamble length is specified in Tables 9 and 10.

16.5 Sync field

The Sync field is intended for the drive to obtain byte synchronization for the following Data field. For this purpose it has a unique Channel bit pattern with three consecutive 8T runs. The Sync field has a length of 24 Channel bits and shall be recorded with the following Channel bits:

100000001000000010000000

where 1 is a transition from mark to space or vice-versa.

The 8T-8T-8T pattern does not occur in RLL(1,7) encoded data.

16.6 Viterbi Training field (VTF)

The Viterbi Training field contains 3T and 2T runs for the purpose of initializing the Viterbi Target levels.

The VTF has a length of 48T with the following Channel bits:

100000100000101010101010001000100010001010101010

where 1 is a transition from mark to space or vice-versa.

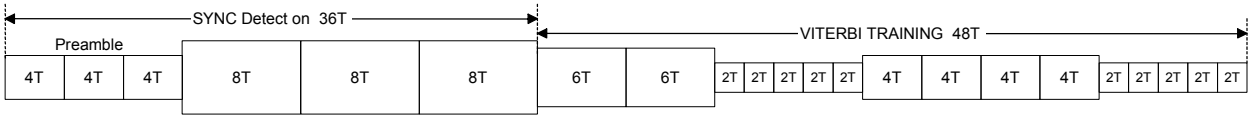

Figure 20 — Runlengths in Sync field and Viterbi Training field

16.7 Data field

The Data field is intended for recording user data. It shall consist of 9 424 bytes:

8 192 user bytes

1 232 bytes for Control, CRC, ECC (see Annex G for coding and interleave)

© ISO/IEC 2008 – All rights reserved
Copyright International Organization for Standardization
Provided by IHS under license with ISO
No reproduction or networking permitted without license from IHS
Not for Resale

All the above bytes shall be scrambled in accordance with Annex K.

The Data field shall be encoded into RLL(1,7) code as specified in 17.1.

The Data field shall be decoded from RLL(1,7) code as specified in 17.2.

Utility fields shall be ignored by encoder and decoder.

16.7.1 Recording Sequence for Data field

The elements of the Data field shall be recorded on the disk according to the sequence below immediately following the first Reference field, with Resync fields and Reference fields inserted as specified in 16.1.

Bytes 0–8 191: User Data bytes

Bytes 8 192–8 203: Control bytes

Bytes 8 204–8 207: CRC bytes

Bytes 8 208–9 423: ECC bytes

16.7.2 User Data bytes

These bytes are at the disposal of the user for recording information. There are 8 192 such bytes per Sector.

16.7.3 CRC and ECC bytes

The Cyclic Redundancy Code bytes and Error Correction Code bytes are used by the error detection and correction system to rectify erroneous data. The ECC is a Reed-Solomon code of degree 32.

The computation of the check bytes of the CRC and ECC shall be as specified in Annex G.

16.7.4 Control bytes

There shall be 12 Control bytes written after the User Data bytes. The first 4 bytes (P1) shall be recorded with the 4 bytes Logical Block Address (LBA) of the Sector. The second 4 bytes (P2) shall be recorded with the 4 bytes Physical Block Address (PBA) from the ID field of the Sector. The remaining 4 bytes (P3) shall be recorded with the 4 bytes Drive Information Record (DIR). The Drive Information Record shall be used as specified in Annex H.

16.7.5 Resync fields

The Resync fields are utility fields to enable a drive to regain byte synchronization after a large defect that may have caused bit-slip in the Read Channel. The Resync fields shall be inserted among the rest of the bytes of the Data field as specified in section 6.1. The length of the Resync field shall be 48 Channel bits.

Resync Pattern X000100000001000000010001000100010101010101000100Z

where 1 is a transition from mark to space or from space to mark.

Rules for the first bit X: X = 1 if preceding Channel bit is 0, else X = 0

Rules for the last bit Z: Z = 1 if following Channel bit is 0, else Z = 0

The 8T-8T pattern does not occur in encoded RLL data.

The 2T runs and some of the 4T runs are used for Viterbi training in case bit-slip occurs in a Sector.

© ISO/IEC 2008 – All rights reserved

Copyright International Organization for Standardization
Provided by IHS under license with ISO
No reproduction or networking permitted without license from IHS
Not for Resale

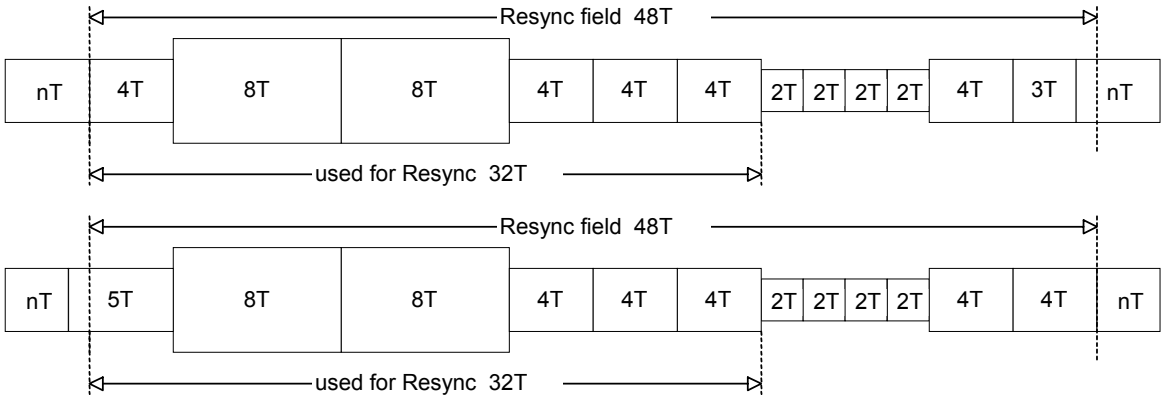

Figure 21 — Runlengths of the Resync field for different data bits

16.7.6 Postamble field (PA)

The PA field shall have a nominal length of 12 Channel bits, which shall be used for RLL(1,7) closure. This field shall be encoded with the data byte (FFh).

16.8 SPS allocation

This applies to Type RW media only. Variable SPS (Start Position Shift) shall be determined using the SPS random signal generator in the drives. The purpose of the SPS is to vary the physical location of data written to the same Sector on subsequent rewrites. This extends the number of rewrite cycles for rewritable Phase Change layers. SPS randomly varies between 0 and 255.

When SPS is 0 then the writing starts at the first Channel bit of the Sector and stops 255 Channel bits before the end of the allocated space for a Data Sector, not including the allocated Gap between Data Sectors.

When SPS is 255 then the writing starts at the Channel bit number 255 of the Sector and stops right at the end of the allocated space for a data Sector, not including the gap between data Sectors.

When writing extents the SPS value is kept the same for all Sectors of the extent. This creates a fixed gap-size between the Sectors of the extent.

A possible implementation of a SPS generator is given in Annex S.

17 Recording code

17.1 RLL(1,7) encoding

The recording shall use a “Mark Edge Recording” method as specified hereafter.

In the two tables below a Channel bit of ONE represents the edge between a mark and a space or a space and a mark. The recording code used to record all data in the data fields of the disk shall be a run-length limited code known as RLL(1,7). However, in order to limit the consecutive number of 2T runs to 5, the last row in the tables show a special encode/decode condition. Group A, B and C differentiate between the three different numbers of bits that are converted.

All utility fields in the Data field have already been defined in terms of Channel bits.

Copyright International Organization for Standardization
Provided by IHS under license with ISO
No reproduction or networking permitted without license from IHS
© ISO/IEC 2008 – All rights reserved
Not for Resale

Table 11 — Encoding of input bits to Channel bits

RLL (1,7) ENCODER			
Preceding Channel bit	Input bits	Channel bits	Group
0	01	100	A
1	01	000	A
X	10	010	A
0	11	101	A
1	11	001	A
0	0001	100001	B
1	0001	000001	B
0	0010	100000	B
1	0010	000000	B
X	0011	010001	B
X	0000	010000	B
X	101110	010000001	C

The coding shall start at the first bit of the first byte of the field to be converted. The preceding Channel bit to the first byte is assumed to be ZERO.

Basically two input bits translate into three Channel bits (group A). However, if the two input bits are ZERO ZERO, then the next two input bits are also evaluated, and the four input bits translate into six Channel bits (group B). In order to prevent more than 5 consecutive 2T runs an exception is made for a data pattern of 101110 (group C).

Resync and Reference fields shall be ignored for encoding of the input data. Resync and Reference fields must be inserted into the Channel bit data at the proper locations after encoding.

The insertion of the Resync and Reference fields does not affect closure of the RLL(1,7) encoded data. Closure of the last data byte in each Sector occurs in the Postamble (PA) field.

Drives shall employ write strategies that are optimized for each recording layer stack. These write strategies are tuned for each layer such that the signal characteristics, as specified in the Standard, are satisfied.

17.2 RLL(1,7) decoding

Table 12 — Decoding of Channel bits to information bits

RLL (1,7) DECODER				
Preceding Channel bit	Current Channel bit	Following Channel bit	Information bits	Group
X	010	01 or 10	10	A
1	000	01 or 10	01	A
X	100	01 or 10	01	A
1	001	X	11	A
X	101	X	11	A
X	010000	01 or 10	0000	B
X	010001		0011	B
X	100000		0010	B
1	000000		0010	B
X	100001		0001	B
1	000001		0001	B
X	010000001		101110	C

© ISO/IEC 2008 – All rights reserved
Copyright International Organization for Standardization
Provided by IHS under license with ISO
No reproduction or networking permitted without license from IHS
Not for Resale

Resync and Reference fields shall be ignored for decoding of channel data. All Resync and Reference bits must be removed from the channel data prior to decoding.

18 Synchronization of Preformatted and Recorded Sectors

18.1 Synchronization of Type WORM media

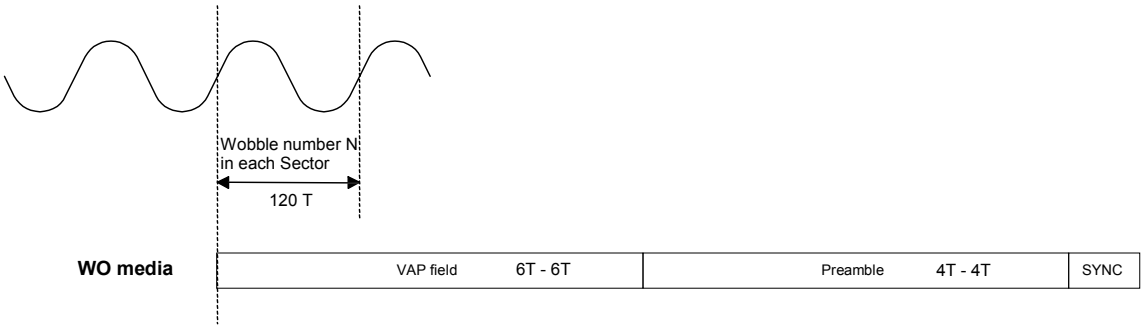

Figure 22 — Start of a WORM Data Sector

18.2 Synchronization of Type RW media

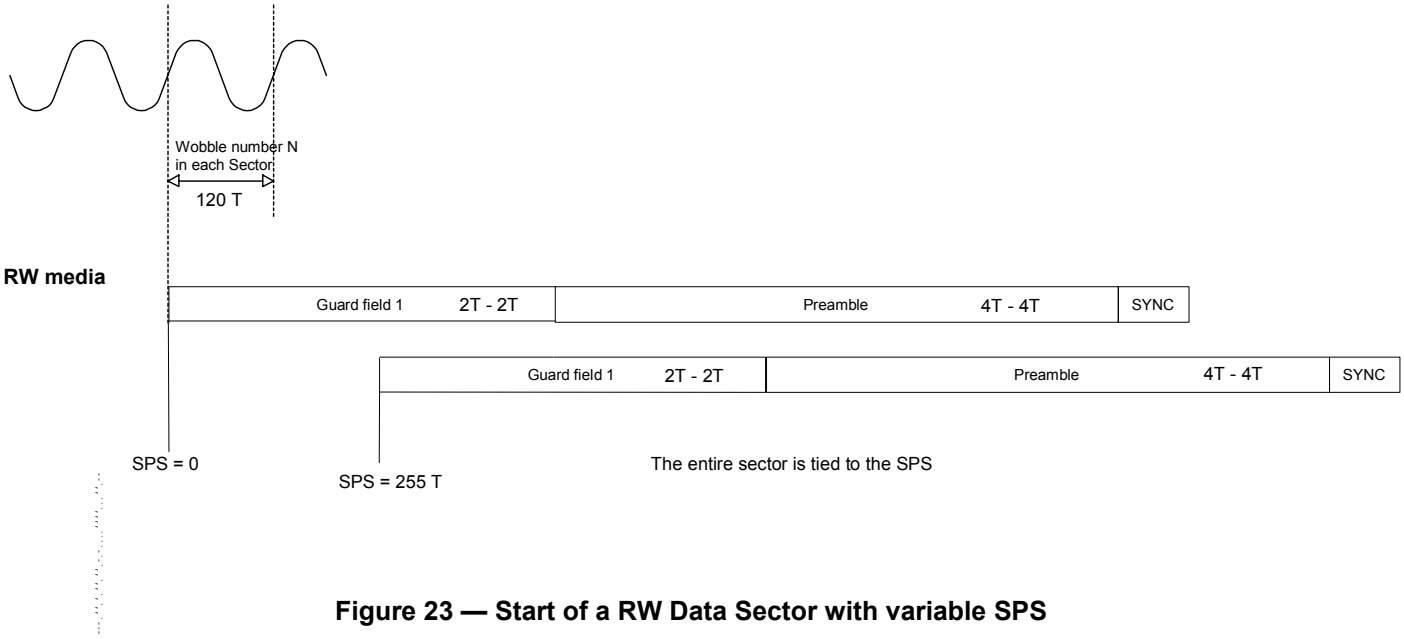

Figure 23 — Start of a RW Data Sector with variable SPS

19 Logical Format

19.1 Logical Format Layout

The logical format shall have the layout shown on Tables 13, 14 for Type WORM media and Tables 15, 16 for Type RW media.

© ISO/IEC 2008 – All rights reserved
Copyright International Organization for Standardization
Provided by IHS under license with ISO
No reproduction or networking permitted without license from IHS
Not for Resale

Table 13 — Logical format of Type WORM media, Zones 0–11

WORM	Zone Number	Numbers of Tracks	Sectors per Tracks	Number of Sectors	Start Track	End Track	Start PBA	End PBA
Lead-in band	0	937	49	45 913	0	936	0	45 912
User band	0	2 087	49	102 263	937	3 023	45 913	148 175
Outer MFR band	0	50	49	2 450	3 024	3 073	148 176	150 625
Outer RFO band	0	5	49	245	3 074	3 078	150 626	150 870
Inner guard band	0	4	49	196	3 079	3 082	150 871	151 066
Outer guard band	1	3	48	144	0	2	524 288	524 431
Outer WPC band	1	633	48	30 384	3	635	524 432	554 815
User band	1	3 846	48	184 608	636	4 481	554 816	739 423
Inner guard band	1	4	48	192	4 482	4 485	739 424	739 615
Outer guard band	2	3	47	141	0	2	1 048 576	1 048 716
User band	2	4 454	47	209 338	3	4 456	1 048 717	1 258 054
Inner guard band	2	4	47	188	4 457	4 460	1 258 055	1 258 242
Outer guard band	3	3	46	138	0	2	1 572 864	1 573 001
User band	3	4 429	46	203 734	3	4 431	1 573 002	1 776 735
Inner guard band	3	4	46	184	4 432	4 435	1 776 736	1 776 919
Outer guard band	4	3	45	135	0	2	2 097 152	2 097 286
User band	4	4 404	45	198 180	3	4 406	2 097 287	2 295 466
Inner guard band	4	4	45	180	4 407	4 410	2 295 467	2 295 646
Outer guard band	5	3	44	132	0	2	2 621 440	2 621 571
User band	5	4 379	44	192 676	3	4 831	2 621 572	2 814 247
Inner guard band	5	4	44	176	4 382	4 385	2 814 248	2 814 423
Outer guard band	6	3	43	129	0	2	3 145 728	3 145 856
User band	6	4 354	43	187 222	3	4 356	3 145 857	3 333 078
Inner guard band	6	4	43	172	4 357	4 360	3 333 079	3 333 250
Outer guard band	7	3	42	126	0	2	3 670 016	3 670 141
User band	7	4 330	42	181 860	3	4 332	3 670 142	3 852 001
Inner guard band	7	4	42	168	4 333	4 336	3 852 002	3 852 169
Outer guard band	8	3	41	123	0	2	4 194 304	4 194 326
User band	8	3 945	41	161 745	3	3 947	4 194 427	4 356 171
Inner guard band	8	4	41	164	3 948	3 951	4 356 172	4 356 335
Outer guard band	9	3	40	120	0	2	4 718 592	4 718 711
User band	9	3 940	40	157 600	3	3 942	4 718 712	4 876 311
Inner guard band	9	4	40	160	3 943	3 946	4 876 312	4 876 471
Outer guard band	10	3	39	117	0	2	5 242 880	5 242 996
User band	10	3 934	39	153 426	3	3 936	5 242 997	5 396 422
Inner guard band	10	4	39	156	3 937	3 940	5 396 423	5 396 578
Outer guard band	11	3	38	114	0	2	5 767 168	5 767 281
SDI1	11	1	38	38	3	3	5 767 282	5 767 319
DDS1	11	1	38	38	4	4	5 767 320	5 767 357
DMA	11	2 000	38	76 000	5	2 004	5 767 358	5 843 357
User band	11	1 917	38	72 846	2 005	3 921	5 843 358	5 916 203
PDL3	11	8	38	304	3 922	3 929	5 916 204	5 916 507
SDI2	11	1	38	38	3 930	3 930	5 916 508	5 916 545
DDS2	11	1	38	38	3 931	3 931	5 916 546	5 916 583
Inner guard band	11	4	38	152	3 922	3 925	5 916 584	5 916 735

--`,,```,,,,````-`-`,,`,,`,`,,`---

© ISO/IEC 2008 – All rights reserved

Copyright International Organization for Standardization
Provided by IHS under license with ISO
No reproduction or networking permitted without license from IHS
Not for Resale

Table 14 — Logical format of Type WORM media, Zones 12–26

WORM	Zone Number	Numbers of Tracks	Sectors per Tracks	Number of Sectors	Start Track	End Track	Start PBA	End PBA
Outer guard band	12	3	37	111	0	2	6 291 456	6 291 566
Middle WPC band	12	820	37	30 340	3	822	6 291 567	6 321 906
User band	12	3 048	37	112 776	823	3 870	6 321 907	6 434 682
Middle MFR band	12	50	37	1 850	3 871	3 920	6 434 683	6 436 532
Middle RFO band	12	5	37	185	3 921	3 925	6 436 533	6 436 717
Inner guard band	12	4	37	148	3 926	3 929	6 436 718	6 436 865
Outer guard band	13	3	36	108	0	2	6 815 744	6 815 851
User band	13	3 918	36	141 048	3	3 920	6 815 852	6 956 899
Inner guard band	13	4	36	144	3 921	3 924	6 956 900	6 957 043
Outer guard band	14	3	35	105	0	2	7 340 032	7 340 136
User band	14	3 912	35	136 920	3	3 914	7 340 137	7 477 056
Inner guard band	14	4	35	140	3 915	3 918	7 477 057	7 477 196
Outer guard band	15	3	34	102	0	2	7 864 320	7 864 421
User band	15	3 907	34	132 838	3	3 909	7 864 422	7 997 259
Inner guard band	15	4	34	136	3 910	3 913	7 997 260	7 997 395
Outer guard band	16	3	33	99	0	2	8 388 608	8 388 706
User band	16	3 901	33	128 733	3	3 903	8 388 707	8 517 439
Inner guard band	16	4	33	132	3 904	3 907	8 517 440	8 517 571
Outer guard band	17	3	32	96	0	2	8 912 896	8 912 991
User band	17	3 896	32	124 672	3	3 898	8 912 992	9 037 663
Inner guard band	17	4	32	128	3 899	3 902	9 037 664	9 037 791
Outer guard band	18	3	31	93	0	2	9 437 184	9 437 276
User band	18	3 890	31	120 590	3	3 892	9 437 277	9 557 866
Inner guard band	18	4	31	124	3 893	3 896	9 557 867	9 557 990
Outer guard band	19	3	30	90	0	2	9 961 472	9 961 561
User band	19	3 885	30	116 550	3	3 887	9 961 562	10 078 111
Inner guard band	19	4	30	120	3 888	3 891	10 078 112	10 078 231
Outer guard band	20	3	29	87	0	2	10 485 760	10 485 846
User band	20	3 880	29	112 520	3	3 882	10 485 847	10 598 366
Inner guard band	20	4	29	116	3 883	3 886	10 598 367	10 598 482
Outer guard band	21	3	28	84	0	2	11 010 048	11 010 131
User band	21	3 874	28	108 472	3	3 876	11 010 132	11 118 603
Inner guard band	21	4	28	112	3 877	3 880	11 118 604	11 118 715
Outer guard band	22	3	27	81	0	2	11 534 336	11 534 416
User band	22	3 869	27	104 463	3	3 871	11 534 417	11 638 879
Inner guard band	22	4	27	108	3 872	3 875	11 638 880	11 638 987
Outer guard band	23	3	26	78	0	2	12 058 624	12 058 701
User band	23	3 863	26	100 438	3	3 865	12 058 702	12 159 139
Inner guard band	23	4	26	104	3 866	3 869	12 159 140	12 159 243
Outer guard band	24	3	25	75	0	2	12 582 912	12 582 986
User band	24	3 858	25	96 450	3	3 860	12 582 987	12 679 436
Inner guard band	24	4	25	100	3 861	3 864	12 679 437	12 679 536
Outer guard band	25	3	24	72	0	2	13 107 200	13 107 271
Inner WPC band	25	1 265	24	30 360	3	1 267	13 107 272	13 137 631
User band	25	2 533	24	60 792	1 268	3 800	13 137 632	13 198 423
Inner MFR band	25	50	24	1 200	3 801	3 850	13 198 424	13 199 623
Inner RFO band	25	5	24	120	3 851	3 855	13 199 624	13 199 743
Inner guard band	25	4	24	96	3 856	3 859	13 199 744	13 199 839
Outer guard band	26	3	23	69	0	2	13 631 488	13 631 556
User band	26	2 913	23	65 999	3	2 915	13 631 557	13 698 555
Lead-out band	26	5 621	23	129 283	2 916	8 536	13 698 556	13 827 838

Copyright International Organization for Standardization
Provided by IHS under license with ISO
No reproduction or networking permitted without license from IHS
Not for Resale
© ISO/IEC 2008 – All rights reserved

Table 15 — Logical format of Type RW media, Zones 0–11

RW	Zone Number	Numbers of Tracks	Sectors per Tracks	Number of Sectors	Start Track	End Track	Start PBA	End PBA
Lead-in band	0	857	51	43 707	0	856	0	43 706
User band	0	2 234	51	113 934	857	3 090	43 707	157 640
Outer MFR band	0	50	51	2 550	3 091	3 140	157 641	160 190
Outer RFO band	0	5	51	255	3 141	3 145	160 191	160 445
Inner guard band	0	4	51	204	3 146	3 149	160 446	160 649
Outer guard band	1	3	50	150	0	2	524 288	524 437
Outer WPC band	1	53	50	2 650	3	55	524 438	527 087
User band	1	4 582	50	229 100	56	4 637	527 088	756 187
Inner guard band	1	4	50	200	4 638	4 641	756 188	756 387
Outer guard band	2	3	49	147	0	2	1 048 576	1 048 722
User band	2	4 579	49	224 371	3	4 581	1 048 723	1 273 093
Inner guard band	2	4	49	196	4 582	4 585	1 273 094	1 273 289
Outer guard band	3	3	48	144	0	2	1 572 864	1 573 007
User band	3	4 523	48	217 104	3	4 525	1 573 008	1 790 111
Inner guard band	3	4	48	192	4 526	4 529	1 790 112	1 790 303
Outer guard band	4	3	47	141	0	2	2 097 152	2 097 292
User band	4	4 468	47	209 996	3	4 470	2 097 293	2 307 288
Inner guard band	4	4	47	188	4 471	4 474	2 307 289	2 307 476
Outer guard band	5	3	46	138	0	2	2 621 440	2 621 577
User band	5	4 413	46	202 998	3	4 415	2 621 578	2 824 575
Inner guard band	5	4	46	184	4 416	4 419	2 824 576	2 824 759
Outer guard band	6	3	45	135	0	2	3 145 728	3 145 862
User band	6	4 359	45	196 155	3	4 361	3 145 863	3 342 017
Inner guard band	6	4	45	180	4 362	4 365	3 342 018	3 342 197
Outer guard band	7	3	44	132	0	2	3 670 016	3 670 147
User band	7	4 305	44	189 420	3	4 307	3 670 148	3 859 567
Inner guard band	7	4	44	176	4 308	4 311	3 859 568	3 859 743
Outer guard band	8	3	43	129	0	2	4 194 304	4 194 432
User band	8	4 252	43	182 836	3	4 254	4 194 433	4 377 268
Inner guard band	8	4	43	172	4 255	4 258	4 377 269	4 377 440
Outer guard band	9	3	42	126	0	2	4 718 592	4 718 717
User band	9	3 370	42	141 540	3	3 372	4 718 718	4 860 257
Inner guard band	9	4	42	168	3 373	3 376	4 860 258	4 860 425
Outer guard band	10	3	41	123	0	2	5 242 880	5 243 002
User band	10	3 364	41	137 924	3	3 366	5 243 003	5 380 926
Inner guard band	10	4	41	164	3 367	3 370	5 380 927	5 381 090
Outer guard band	11	3	40	120	0	2	5 767 168	5 767 287
SDI1	11	1	40	40	3	3	5 767 288	5 767 327
DDS1	11	1	40	40	4	4	5 767 328	5 767 367
DMA	11	1 877	40	75 080	5	1 881	5 767 368	5 842 447
User band	11	1 469	40	58 760	1 882	3 350	5 842 448	5 901 207
PDL3	11	8	40	320	3 351	3 358	5 901 208	5 901 527
SDI2	11	1	40	40	3 359	3 359	5 901 528	5 901 567
DDS2	11	1	40	40	3 360	3 360	5 901 568	5 901 607
Inner guard band	11	4	40	160	3 351	3 354	5 901 608	5 901 767

© ISO/IEC 2008 – All rights reserved

Copyright International Organization for Standardization
Provided by IHS under license with ISO
No reproduction or networking permitted without license from IHS
Not for Resale

Table 16 — Logical format of Type RW media, Zones 12–26

RW	Zone Number	Numbers of Tracks	Sectors per Tracks	Number of Sectors	Start Track	End Track	Start PBA	End PBA
Outer guard band	12	3	39	117	0	2	6 291 456	6 291 572
Middle WPC band	12	67	39	2 613	3	69	6 291 573	6 294 185
User band	12	3 229	39	125 931	70	3 298	6 294 186	6 420 116
Middle MFR band	12	50	39	1 950	3 299	3 348	6 420 117	6 422 066
Middle RFO band	12	5	39	195	3 349	3 353	6 422 067	6 422 261
Inner guard band	12	4	39	156	3 354	3 357	6 422 262	6 422 417
Outer guard band	13	3	38	114	0	2	6 815 744	6 815 857
User band	13	3 345	38	127 110	3	3 347	6 815 858	6 942 967
Inner guard band	13	4	38	152	3 348	3 351	6 942 968	6 943 119
Outer guard band	14	3	37	111	0	2	7 340 032	7 340 142
User band	14	3 339	37	123 543	3	3 341	7 340 143	7 463 685
Inner guard band	14	4	37	148	3 342	3 345	7 463 686	7 463 833
Outer guard band	15	3	36	108	0	2	7 864 320	7 864 427
User band	15	3 333	36	119 988	3	3 335	7 864 428	7 984 415
Inner guard band	15	4	36	144	3 336	3 339	7 984 416	7 984 559
Outer guard band	16	3	35	105	0	2	8 388 608	8 388 712
User band	16	3 327	35	116 445	3	3 329	8 388 713	8 505 157
Inner guard band	16	4	35	140	3 330	3 333	8 505 158	8 505 297
Outer guard band	17	3	34	102	0	2	8 912 896	8 912 997
User band	17	3 321	34	112 914	3	3 323	8 912 998	9 025 911
Inner guard band	17	4	34	136	3 324	3 327	9 025 912	9 026 047
Outer guard band	18	3	33	99	0	2	9 437 184	9 437 282
User band	18	3 315	33	109 395	3	3 317	9 437 283	9 546 677
Inner guard band	18	4	33	132	3 318	3 321	9 546 678	9 546 809
Outer guard band	19	3	32	96	0	2	9 961 472	9 961 567
User band	19	3 309	32	105 888	3	3 311	9 961 568	10 067 455
Inner guard band	19	4	32	128	3 312	3 315	10 067 456	10 067 583
Outer guard band	20	3	31	93	0	2	10 485 760	10 485 852
User band	20	3 303	31	102 393	3	3 305	10 485 853	10 588 245
Inner guard band	20	4	31	124	3 306	3 309	10 588 246	10 588 369
Outer guard band	21	3	30	90	0	2	11 010 048	11 010 137
User band	21	3 297	30	98 910	3	3 299	11 010 138	11 109 047
Inner guard band	21	4	30	120	3 300	3 303	11 109 048	11 109 167
Outer guard band	22	3	29	87	0	2	11 534 336	11 534 422
User band	22	3 291	29	95 439	3	3 293	11 534 423	11 629 861
Inner guard band	22	4	29	116	3 294	3 297	11 629 862	11 629 977
Outer guard band	23	3	28	84	0	2	12 058 624	12 058 707
User band	23	3 285	28	91 980	3	3 287	12 058 708	12 150 687
Inner guard band	23	4	28	112	3 288	3 291	12 150 688	12 150 799
Outer guard band	24	3	27	81	0	2	12 582 912	12 582 992
User band	24	3 279	27	88 533	3	3 281	12 582 993	12 671 525
Inner guard band	24	4	27	108	3 282	3 285	12 671 526	12 671 633
Outer guard band	25	3	26	78	0	2	13 107 200	13 107 277
Inner WPC band	25	100	26	2 600	3	102	13 107 278	13 109 877
User band	25	3 117	26	81 042	103	3 219	13 109 878	13 190 919
Inner MFR band	25	50	26	1 300	3 220	3 269	13 190 920	13 192 219
Inner RFO band	25	5	26	130	3 270	3 274	13 192 220	13 192 349
Inner guard band	25	4	26	104	3 275	3 278	13 192 350	13 192 453
Outer guard band	26	3	25	75	0	2	13 631 488	13 631 562
User band	26	2 643	25	66 075	3	2 645	13 631 563	13 697 637
Lead-out band	26	5 143	25	128 575	2 646	7 788	13 697 638	13 826 212

© ISO/IEC 2008 – All rights reserved
Copyright International Organization for Standardization
Provided by IHS under license with ISO
No reproduction or networking permitted without license from IHS
Not for Resale

19.2 Logical Format Layout

19.2.1 Lead-in band

The Lead-in band shall be used for positioning purposes only. See Tables 13 and 14 for detailed length and location.

19.2.2 Manufacturer (MFR) Test bands

There shall be an Outer, Middle, and Inner Manufacturer Test band on each side of the disk. They are provided to allow the media manufacturers to perform tests on the disk, including read and write calibration operations, in areas located away from that intended for user recorded information. The Sectors contained in the Manufacturer Test bands may be used at the discretion of the media manufacturer. They are intended for quality tests by the media manufacturer and should not be used by drives.

19.2.3 Read Focus Offset (RFO) bands

There shall be Outer, Middle, and Inner Read Focus Offset bands on each side of the disk. See Tables 13 and 14 for detailed length and location. They allow drives to adjust the focus offset to the optimal read conditions for the current disk and for the current environmental conditions.

The Read Focus Offset bands shall be recorded by the media manufacturer, and shall not be written or modified by the drive system. The recorded data marks shall satisfy the requirements specified in Clause 25. All Read Focus Offset Sectors shall contain random data patterns.

19.2.4 Write Power Calibration (WPC) bands

There shall be an Outer, Middle, and Inner Write Power Calibration band on each side of the disk. See Tables 13 and 14 for detailed length and location.

They are provided for drives to optimize their write power and should not be used by media manufacturers.

For Type RW media, the Tracks and Sectors used for testing should be chosen from the Write Calibration band in a random way, so as to ensure a gradual degradation of the entire Write Power Calibration band due to use. Then each Track in this band will remain representative for the characteristics of the tracks in the User bands of the disk.

For Type WORM media, the Sectors should be used sequentially until depleted, at which point the disk becomes a read-only disk.

19.2.5 Specific Disk Information (SDI) Tracks

The two SDI Tracks on each side of the disk, SDI-1 and SDI-2, See Tables 13 and 14 for location; shall be used for recording Specific Disk Information. These SDI Tracks shall each consist of Sectors recorded by the same modulation method and format as is used in the User bands. SDI Sectors shall not be remapped to alternate locations.

Both of the SDI Tracks shall be recorded by the media manufacturer, and shall not be written or modified by the drive system. The SDI Tracks shall initially be recorded only in every fourth Sector. The media manufacturer may use the three unrecorded Sectors between the recorded Sectors to allow for amendments of the SDI data. Up to three amendments to the SDI can be made. The SDI Sectors for each amend shall contain identical information, as defined in Annex I.

The disk drive system shall use the latest amended SDI data, as determined by the Sectors that have been written.

The initial SDI shall be written in Sectors 0, 4, 8, 12, 16, 20, 24, 28, 32.

© ISO/IEC 2008 – All rights reserved

Copyright International Organization for Standardization
Provided by IHS under license with ISO
No reproduction or networking permitted without license from IHS
Not for Resale

Amend 1 shall be written in Sectors 1, 5, 9, 13, 17, 21, 25, 29, 33.

Amend 2 shall be written in Sectors 2, 6, 10, 14, 18, 22, 26, 30, 34.

Amend 3 shall be written in Sectors 3, 7, 11, 15, 19, 23, 27, 31, 35.

SDI Sectors shall be recorded with the four LBA Control bytes (P1) set as follows:

LBA = PBA + 80000000h.

19.2.6 Disk Definition Structure (DDS) bands

The two DDS bands on each side of the disk, Outer DDS band and Inner DDS band, shall be used for recording the Disk Definition Structure. The Outer and Inner DDS bands shall each consist of Sectors recorded by the same modulation method and format as is used in the User Zone. See Tables 13 and 14 for detailed numbers and location for detailed length and location.

The media manufacturer shall record both of the DDS bands during the disk certification process

For Type RW media, the DDS shall be rewritten by the drive system during a format process.

For Type WORM media, the DDS shall not be written or modified by the drive system after disk format.

The DDS bands shall initially be recorded only in every fourth Sector, as shown hereafter.

The media manufacturer may use the three unrecorded Sectors between the recorded Sectors to allow for amendment of the DDS data. Up to three amendments to the DDS can be made. The DDS Sectors for each amend shall contain identical information.

The disk drive system shall use the latest amended DDS data, as determined by the Sectors that have been written.

The initial DDS shall be written in Sectors 0, 4, 8, 12, 16, 20, 24, 28, 32.

Amend 1 shall be written in Sectors 1, 5, 9, 13, 17, 21, 25, 29, 33.

Amend 2 shall be written in Sectors 2, 6, 10, 14, 18, 22, 26, 30, 34.

Amend 3 shall be written in Sectors 3, 7, 11, 15, 19, 23, 27, 31, 35.

DDS Sectors shall be recorded with the four LBA Control bytes (P1) set as follows:

LBA = PBA + 80000000h.

DDS Sectors shall not be remapped to alternate locations.

The DDS Sectors shall be recorded with data bytes as specified in 20.5.

19.2.7 PDL3 band

The PDL3 band shall be used to record a redundant version of the two Primary Defect Lists (PDL1 and PDL2) that are contained in the Defect Management Area. See Tables 13 and 14 for detailed length and location of PDL3 band.

--`,,```,,,,````-`-`,,`,,`,`,,`---

© ISO/IEC 2008 – All rights reserved
Copyright International Organization for Standardization
Provided by IHS under license with ISO
No reproduction or networking permitted without license from IHS
Not for Resale

19.2.8 User bands

The Data fields in the User bands are reserved for user written data. See Tables 13 and 14 for detailed length and location. See Clauses 20 and 21 for a detailed layout of the User bands and the Defect Management Area.

19.2.9 Lead-out band

The Lead-out band shall be used for positioning purposes only. See Tables 13 and 14 for detailed length and location.

20 Layout of the User bands

20.1 General Description of the User bands

The total data capacity of the User bands specified in 19.2.8 is just over 30 Gbytes per side for both Type RW and Type WORM disks.

20.2 Divisions of the User tracks

The User tracks shall be divided into zones as a result of the ZCAV organization of the disk. There shall be 27 Data Zones numbered 0 to 26, both on WORM and RW media.

20.3 User Area

The Data fields in the User Area are intended for recording of the user data.

The User Area shall consist of either:

a Rewritable Zone (Type RW media), or

a Write Once Read Many Zone (Type WORM media).

The User Area shall include one Defect Management Area (DMA). The DMA shall be located in User Zone 11, and shall consist of a contiguous block of PBA numbers.

The User Area and DMA shall include only the PBA numbers specified in the tables of 19.1.

20.4 Defect Management Area (DMA)

The DMA is used to manage media defects found during initialization as well as defects found dynamically during user writes to the disk.

The DMA shall be divided into the follow sub-areas: Primary Defect List 1 (PDL1) Area, Secondary Defect List (SDL) Area, Primary Spares Area (PSA), Secondary Spares Area (SSA), the SDL Duplicate Pages (SDLDP) Area, and Primary Defect List 2 (PDL2) Area.

Each sub-area shall immediately follow the preceding one except for PSA, SSA, and SDLDP Areas that shall be preceded by a 1 Sector pad.

20.4.1 Primary Defect List (PDL) Area

The PDL Area shall store in the PDL Pages the list of defective Sectors found during media certification (see 21.4).

--`,,```,,,,````-`-`,,`,,`,`,,`---

© ISO/IEC 2008 – All rights reserved

Copyright International Organization for Standardization
Provided by IHS under license with ISO
No reproduction or networking permitted without license from IHS
Not for Resale

Three copies of the PDL (PDL1, PDL2, and PDL3) shall be written at media initialization time. The redundant copies shall be used for recovery should any PDL Sector become damaged.

The size of PDL1 shall be established when it is written and shall be the actual number of Sectors used (both good and bad) in writing the PDL. At least 1 Sector shall be used for PDL1.

The size of PDL2 shall be:

2 * Rounded up (Number of Primary Defects / Number of Entries per PDL Page).

The size of the PDL2 Area accommodates twice the number of PDL Pages required for the Primary Defect List, in the event that some Sectors in this area may be defective. If certification is not performed, or no defective Sectors are found during certification, 1 Sector shall be used for PDL2.

The PDL3 Area is not part of the DMA. PDL3 is recorded in a dedicated area located near the inner diameter of Zone 11.

20.4.2 Secondary Defect List (SDL) Area

The SDL Area shall store in the SDL Pages the list of defective Sectors found during user data writes (see 21.5).

The size of the SDL Area shall be:

2 * Rounded up[(DMA Size - PDL1 Size - PDL2 Size - Estimated PSA Size - Pad Sectors) / Maximum Entries per SDL Page].

The size of the SDL Area accommodates twice the number of SDL Pages required for the number of Sectors remaining in the SSA, in the event that some Sectors in this area may be defective.

For Type WORM media, a new SDL Page is recorded after each group of 250 Sectors (typical) has been written into the SSA.

The complete Secondary Defect List shall be determined by reading the SDL Area and also scanning the SSA for any Sectors that have not yet been recorded into an SDL Page.

20.4.3 SDL Duplicate Pages (SDLDP) Area

The SDLDP Area shall store a copy of the content of the SDL for recovery in the case of damaged SDL Sectors.

The SDLDP Area size shall be equal to the SDL Area size.

20.4.4 Primary Spares Area (PSA)

The PSA shall contain Sectors that are slipped due to defects found during media certification.

The PSA size shall be equal to the number of primary defects in the User bands and the PSA. The estimated PSA size shall be defined as the number of Sectors required to relocate the primary defects in the User bands. The actual PSA size shall be increased by 1 Sector for each primary defect in the PSA. In the event that there are no primary defects in the User bands, 1 Sector shall be used for the PSA.

20.4.5 Secondary Spares Area (SSA)

The SSA shall contain Sectors automatically relocated during writing (See Table 17).

The SSA size shall be equal to the size of the DMA minus the size of all other sub-areas and the pad Sectors.

© ISO/IEC 2008 – All rights reserved
Copyright International Organization for Standardization
Provided by IHS under license with ISO
No reproduction or networking permitted without license from IHS
Not for Resale

Table 17 — Defect Management Area layout

Location	Contents	Reserved Area Size
Start PBA = (1) DMA (Defect Management Area) End PBA =	PDL1(2)	Actual number of Sectors used in writing PDL. At least 1 Sector shall be used.
	SDL(2)	2 * Rounded up [(DMA Size - PDL1 Size - PDL2 Size - Estimated PSA Size - 3 Pad Sectors) / Maximum Entries per SDL Page]
	Pad Sector	1 PBA
	PSA(2)	PSA = Number of defective Sectors found in Zones and PSA during initialization. At least 1 Sector is used for the PSA area.
	Pad Sector	1 PBA
	SSA(2)	DMA Size - All other constructs and pad Sectors within DMA
	Pad Sector	1 PBA
	SDLMP(2)	Same size as SDL
	PDL2(2)	2 * Rounded up (Number of Primary Defects / Number of Entries per PDL Page). At least 1 Sector shall be used.

NOTE 1 This area has the indicated dedicated PBA area on the disk. The actual start PBA of valid data for this area however, is indicated in the DDS. The start PBA in this table and the start PBA given in the DDS may be different as an error could occur in writing the first PBA(s) in this area, such that the first PBA(s) are not valid. The DDS structure points to the first valid ("good") PBA in this area.

NOTE 2 The actual Start and End PBAs for the structures are recorded in DDS and may differ from the reserved spaces listed above.

20.5 Disk Definition Structure (DDS)

The DDS shall consist of a table with a length of 1 Sector. It specifies the location of the defect management entities, provides information about the drive that wrote it, and provides information concerning Secondary Defect List (SDL) page handling. The DDS shall be recorded as specified in 19.2.6.

Table 18 specifies the format of a DDS Sector.

Table 18 — DDS Sector format

Byte	Contents
0–1	DDS Identifier (A5A5h)
2	DDS Format Revision
3–10	Vendor Identification (MSB–LSB)(ASCII)
11–26	Product Identification (MSB–LSB)(ASCII)
27–30	Product Revision Level (MSB–LSB)(ASCII)
31–34	Drive Serial Number (MSB–LSB)

© ISO/IEC 2008 – All rights reserved

Copyright International Organization for Standardization
Provided by IHS under license with ISO
No reproduction or networking permitted without license from IHS
Not for Resale

Table 18 — DDS Sector format (concluded)

35–38	Start of PDL1 (MSB–LSB)(PBA)
39–42	End of PDL1 (MSB–LSB)(PBA)
43	PDL1 Valid Flag
44–59	PDL1 Good Sector Bitmap
60–63	Start of SDL (MSB–LSB)(PBA)
64–67	End of SDL (MSB–LSB)(PBA)
68–69	Maximum Entries per SDL Page (MSB–LSB)
70–73	Start of Primary Spares (MSB–LSB)(PBA)
74–77	End of Primary Spares (MSB–LSB)(PBA)
78–81	Start of Secondary Spares (MSB–LSB)(PBA)
82–85	End of Secondary Spares (MSB–LSB)(PBA)
86–89	Start of PDL2 (MSB–LSB)(PBA)
90–93	End of PDL2 (MSB–LSB)(PBA)
94	PDL2 Valid Flag
95–110	PDL2 Good Sector Bitmap
111–114	Start of SDL Duplicate Pages (MSB–LSB)(PBA)
115–118	End of SDL Duplicate Pages (MSB–LSB)(PBA)
119–122	Start of PDL3 (MSB–LSB)(PBA)
123–126	End of PDL3 (MSB–LSB)(PBA)
127	PDL3 Valid Flag
128–143	PDL3 Good Sector Bitmap
144–145	Disk Reformat Count (MSB–LSB)
146–147	Host Sector Size (MSB–LSB)
148	Format In Progress Flag
149–8 189	Unspecified
8 190–8 191	DDS CRC (MSB–LSB)

The DDS Format Revision, Vendor Identification, Product Identification, Product Revision, and Drive Serial Number fields shall contain implementation specific information that is ignored for the purposes of interchange.

The Start of PDL X fields shall contain the PBA of the first good block in the corresponding PDL. In the event that the first page of a PDL set cannot be written, (7FFFFFFFh) shall be used, as the starting PBA and the Valid Flag shall be set to 0.

The End of PDL X fields shall contain the PBA of the last good block in the corresponding PDL.

The PDL X Valid Flag fields shall contain a 1 when the corresponding PDL is valid and a 0 when invalid. All other values for the Valid Flag field are illegal.

The purpose of the PDL X Good Sector Bitmap fields is to provide information useful in determining what Sectors in the PDL must be read. The status of each Sector in the PDL can be determined by examining the corresponding bit in the bitmap. Good Sectors have the bit set, whereas bad Sectors do not.

> Example: A 20-page PDL spans 25 Sectors, where the 3rd, 6th, 9th, 10th, and 22nd Sectors are bad. The bitmap for this scenario is: DBh 3Fh FBh 80h 00h 00h 00h 00h 00h 00h 00h 00h 00h 00h 00h 00h.

© ISO/IEC 2008 – All rights reserved
Copyright International Organization for Standardization
Provided by IHS under license with ISO
No reproduction or networking permitted without license from IHS
Not for Resale

For Type RW media, the Disk Reformat Count shall be set to zero for the first format, and incremented by one on each reformat of the disk. For Type WORM media, the Disk Reformat Count shall be set to zero.

The DDS CRC shall be calculated as specified in Annex J.

20.6 Rewritable (RW) Zone

Type RW disks shall have a Rewritable Zone. The Rewritable Zone is intended for writing and rewriting of user data. The Rewritable Zone shall extend over the entire User Area as defined in 20.3.

20.7 Write Once Read Many (WORM) Zone

Type WORM disks shall have a Write Once Read Many Zone. The Write Once Read Many Zone is intended for one time writing of user data. The Write Once Read Many Zone shall extend over the entire User Area as defined in 20.3.

21 Defect Management Area (DMA)

Defective Sectors on the disk shall be replaced by good Sectors according to the defect management scheme described hereafter. Each side of the disk shall be initialized before use. This standard allows media initialization with or without certification. A Sector Slipping Algorithm handles defective Sectors found during certification. A Linear Replacement Algorithm handles defective Sectors found after initialization. The total number of Sectors on a side of the disk replaced by the Sector Slipping Algorithm shall not exceed half the number of DMA Sectors. The total number of Sectors on a side of the disk replaced by both algorithms shall not exceed the number of DMA Sectors.

21.1 Initialization of the disk

During initialization of the disk, the DMA is partitioned and the DDSs and PDLs are recorded prior to the first use of the disk. The User Area is divided into Zones, each containing only Data Sectors. Media initialization can include a certification of the Rewritable Zones and the Write Once Read Many Zones, whereby defective Sectors are identified and skipped.

For Type WORM disks only a single initialization is allowed. Once the DDSs and PDLs are recorded, it indicates that the disk is initialized and no further initialization is permitted. For Type WORM media, all Sectors in the Write Once Read Many Zones, the PSA, the SSA, the SDL, and the SDLMP shall be in the blank state at the end of initialization. For Type RW media, all Sectors in the SDL, the SDLMP, and the SSA shall be in the erased state at the end of initialization.

All DDS parameters shall be recorded in all of the DDS Sectors as specified in 20.2.5.

The PDLs shall be recorded in the areas defined by 19.2.7 and 20.4. The contents of the PDLs and SDLs are specified in 21.4 and 21.5.

21.2 Certification

If the disk is certified, the certification shall at a minimum be applied to all Sectors of the RW and WORM Zones in the User Area. This standard does not state the method of certification. It may involve, erasing, writing, and reading of Sectors. The Slipping Algorithm (see 21.2.1) shall handle defective Sectors found during certification. Defective Sectors shall not be used for reading or writing in the User Area.

21.2.1 Slipping Algorithm

The slipping algorithm shall be applied across each Zone of the disk if certification is performed.

© ISO/IEC 2008 – All rights reserved

Copyright International Organization for Standardization
Provided by IHS under license with ISO
No reproduction or networking permitted without license from IHS
Not for Resale

For PBAs less than the start PBA of the DMA, defective Data Sectors found during certification shall be replaced by the first good Sector following the defective Sector within the current Zone, thus causing a slip of one Sector towards the DMA. In the case where a Sector slips out of a Zone, with the exception of the last Zone before the DMA, the replacement Sector shall be the first Sector of the next Zone, and so causes a slip of one Sector towards the DMA. Sectors slipping out of the Zone immediately before the DMA are slipped into the PSA. The slip count will increase as the PBA increases.

For PBAs higher than the start PBA of the DMA, defective data Sectors found during certification shall be replaced by the first good Sector preceding the defective Sector within the current Zone, thus causing a slip of one Sector towards the DMA. In the case where a Sector slips out of the beginning of a Zone, with the exception of the first Zone after the DMA, the replacement Sector shall be the last Sector of the preceding Zone, and so causes a slip of one Sector towards the DMA. Sectors slipping out of the Zone immediately after the DMA are slipped into the PSA from the tail end. The slip count will increase as the PBA decreases.

Table 19 shows a simplified example of the Slipping algorithm for a greatly shortened PBA range over several Zones including the DMA and PSA.

Table 19 — Sector Slipping Algorithm example

	Zone 0			Zone 1			DMA–PSA				Zone 2			Zone 3		
PBA	0	1	2	10	11	12	20	21	22	23	30	31	32	40	41	42
LBA	0		1	2	3		4	5	6	7	8	9		10		11
Bad		X				X							X		X	

The address of each defective Sector shall be written in the PDLs. If no defective Sectors are found during certification, an empty PDL shall be recorded. As the PSA grows, the SSA is diminished accordingly.

21.2.2 Linear Replacement Algorithm

Defective Sectors found subsequent to certification are handled using the Linear Replacement Algorithm.

The defective Sector shall be replaced by the first available Sector in the SSA.

If a replacement Sector is found to be defective, it shall be replaced by the next available spare Sector. The next available spare Sector does not have to be the next PBA. The address of the defective Sector shall be recorded in the SDL in the appropriate position so that the replacement Sector PBA can be calculated from the entry position and the “First Spare in this Page” field in the SDL Page.

The addresses of Sectors already recorded in the PDL shall not be recorded in the SDL.

If a replacement Sector listed in the SDL is later found to be defective, it shall be dealt with by making a new entry in the SDL indicating a replacement Sector for the defective replacement Sector.

21.3 Write procedure

When writing data in the Sectors of a Zone all defective Sectors listed in the PDL shall be skipped and the data shall be recorded in the appropriate Sector in accordance with the Slipping Algorithm. If a Sector to be written is listed in the SDL, the data shall be written in the spare Sector pointed to by the SDL, according to the Linear Replacement Algorithm. When writing in the PSA, all defective Sectors listed in the PDL shall be skipped and the data shall be relocated using the Slip Algorithm. When writing the DDS, PDL, SDL, and in the SSA, all defective Sectors listed in the PDL shall be skipped and written in the next available Sector in the affected area.

--`,,```,,,,````-`-`,,`,,`,`,,`---
© ISO/IEC 2008 – All rights reserved
Copyright International Organization for Standardization
Provided by IHS under license with ISO
No reproduction or networking permitted without license from IHS
Not for Resale

For Type WORM after initialization, all sectors in the User Area shall be in the blank state. Erasing of Sectors on Type WORM media is not permitted. If the Sector has been written, a write operation is not permitted.

During write operations, Sectors shall always be recorded with CRC, ECC, and Control Record information as specified by this standard.

21.4 Primary Defect List (PDL)

The PDL shall consist of bytes specifying:

— the format revision of the PDL,

— information about the drive type that wrote the PDL,

— a PDL Page sequence number,

— the number of entries in the entire PDL,

— the Physical Block Addresses (PBA) of the defective Sectors, identified at initialization, in ascending order,

— a vendor unique defect code for each defective Sector,

— the drive serial number of the drive that found each defective Sector.

Table 20 shows the PDL byte layout. All remaining defect entries in the last page of the PDL shall have the PBA set to (7FFFFFFFh), the Defect Cause set to (FFh), and the Drive Serial Number set to (FFFFFFh). If no defective Sectors are detected, the Number of Defective Sectors field shall be set to Zero.

During initialization, a PDL shall be recorded; this PDL may be empty.

The PDL Format Revision, Vendor Identification, Product Identification, Product Revision, and Drive Serial Number fields shall contain implementation specific information that is ignored for the purposes of interchange. The PDL Format Revision is used to specify the format of the unspecified bytes in the PDL Page.

The PDL CRC shall be calculated as specified in Annex J.

When writing a PDL Page, the control record LBA shall be set to the PBA + (80000000h).

Table 20 — Primary Defect List Page format

Byte	Contents
0–1	PDL Identifier (0001h)
2	PDL Page Format Revision
3–10	Vendor Identification (MSB–LSB) (ASCII)
11–26	Product Identification (MSB–LSB) (ASCII)
27–30	Product Revision Level (MSB–LSB)(ASCII)
31–34	Drive Serial Number (MSB–LSB)
35–36	PDL Page Number (MSB–LSB)
37–40	Number of Defective Sectors (MSB–LSB)
41–189	Unspecified
190–193	1st Defective Sector (MSB–LSB)(PBA)
194	1st Defective Sector Defect Cause
195–197	1st Defective Sector Drive Serial Number (MSB–LSB)
.	.
.	.

© ISO/IEC 2008 – All rights reserved

Copyright International Organization for Standardization
Provided by IHS under license with ISO
No reproduction or networking permitted without license from IHS
Not for Resale

Table 20 — Primary Defect List Page format (concluded)

.	.
8 182–8 185	1000th Defective Sector (MSB–LSB)(PBA)
8 186	1000th Defective Sector Defect Cause
8 187–8 189	1000th Defective Sector Drive Serial Number (MSB–LSB)
8 190–8 191	PDL CRC (MSB–LSB)

21.5 Secondary Defect List (SDL)

The SDL is used to record the addresses of data and spare Sectors, which have become defective after initialization and those of their respective replacements. The SDL shall consist of bytes specifying:

— the format revision of the SDL Page,

— information about the drive type that wrote the SDL Page,

— a SDL Page sequence number,

— the number of entries in the SDL Page,

— the Physical Block Address (PBA) of the first Sector in the SSA that is covered by the SDL Page,

— the PBA of each defective Sector,

— a vendor unique defect code for each defective Sector,

— the drive serial number of the drive that found each defective Sector,

— PBA of the first write attempt for this page,

— count of the number of times this page has been updated (shall be set to Zero for Type WORM media).

Table 21 shows the PDL byte layout. All unused defect entries in an SDL Page have the PBA set to (7FFFFFFFh), the Defect Cause set to (FFh), and the Drive Serial Number set to (FFFFFFh). Defective SSA Sectors shall be recorded in the SDL Page in the same manner as unused Sectors.

Table 21 — Secondary Defect List Page format

Byte	Contents
0–1	SDL Identifier (0002h)
2	SDL Page Format Revision
3–10	Vendor Identification (MSB–LSB)(ASCII)
11–26	Product Identification (MSB–LSB)(ASCII)
27–30	Product Revision Level (MSB–LSB)(ASCII)
31–34	Drive Serial Number (MSB–LSB)
35–36	SDL Page Number (MSB–LSB)
37–38	Number of PBAs in this Page (MSB–LSB)
39–42	First Spare in this Page (MSB–LSB)(PBA)
43–46	Page Origin PBA
47–48	Page Update Count
49–189	Unspecified
190–193	1st Defective Sector (MSB–LSB)(PBA)
194	1st Defective Sector Defect Cause
195–197	1st Defective Sector Drive Serial Number (MSB–LSB)

© ISO/IEC 2008 – All rights reserved
Copyright International Organization for Standardization
Provided by IHS under license with ISO
No reproduction or networking permitted without license from IHS
Not for Resale

Table 21 — Secondary Defect List Page format (concluded)

.	.
.	.
.	.
8 182–8 185	1000th Defective Sector (MSB–LSB)(PBA)
8 186	1000th Defective Sector Defect Cause
8 187–8 189	1000th Defective Sector Drive Serial Number (MSB–LSB)
8 190–8 191	SDL CRC (MSB–LSB)

The SDL Format Revision, Vendor Identification, Product Identification, Product Revision, and Drive Serial Number fields shall contain implementation specific information that is ignored for the purposes of interchange. The SDL Format Revision is used to specify the format of the unspecified bytes in the SDL Page.

SDL Pages shall be generated in ascending order by the contents of the First Spare in this Page field. Entries in a given SDL Page shall be in ascending order by replacement PBA. The replacement PBA for a given defective PBA is computed by determining which defect entry contains the defective PBA and taking the index, starting at zero, of that entry and adding it to the contents of the First Spare in this Page field.

Each SDL Page shall contain space for 1000 defect entries, however the Maximum Entries per SDL Page field in the DDS dictates the maximum number that may be used. This number may be different for media Type RW and Type WORM. On Type WORM media, an SDL Page shall only be written when the number of defect entries is equal to the maximum specified in the DDS.

The SDLMP area shall contain a copy of each completed SDL Page.

The SDL CRC shall be calculated as specified in Annex J.

When writing an SDL Page, the control record LBA shall be set to the (PBA + 80000000h).

Section 4 — Characteristics of embossed information

22 Method of testing

The format of the embossed information on the disk is defined in Clauses 13 to 15. Clause 23 specifies the requirements for the signals from the embossed grooves, as obtained when using the Reference Drive specified in Clause 9.

22.1 Environment

All signals specified in Clause 23 shall be within their specified ranges with the cartridge in any environment in the range of allowed operating environments defined in 8.1.2.

22.2 Use of the Reference Drive

All signals specified in Clause 23 shall be measured in the indicated channels of the Reference Drive. The drive shall have the following characteristics for the purpose of these tests.

22.2.1 Optics and mechanics

The focused optical beam shall have the properties defined in 9.2. The disk shall rotate as specified in 9.5.

© ISO/IEC 2008 – All rights reserved

Copyright International Organization for Standardization
Provided by IHS under license with ISO
No reproduction or networking permitted without license from IHS
Not for Resale

22.2.2 Read power

The read power shall be 500 µW ± 30 µW for Type WORM media.

The read power shall be 420 µW ± 20 µW for Type RW media.

22.2.3 Read Channel

The drive shall have a Read Channel, with the implementation as given in 9.3.

22.2.4 Tracking

During the measurement of the signals, the focus of the optical beam shall have an axial deviation of not more than

e_{max} (axial) = 59 nm

from the recording layer, and it shall have a radial deviation of not more than

e_{max} (radial) = 14 nm

from the centre of a Groove Recording Track.

22.2.5 Axial focus offset optimization

The axial focus offset shall be adjusted for the measurement of all embossed signals.

22.3 Definition of signals

Figure 24 shows the signals specified in Clause 23.

All signals are linearly related to currents through a split photodiode detector, and are therefore linearly related to the optical power falling on the detector.

Two signals I_1 and I_2 are derived from the outputs of the split photodiode detector H of the Reference Drive (see 9.1).

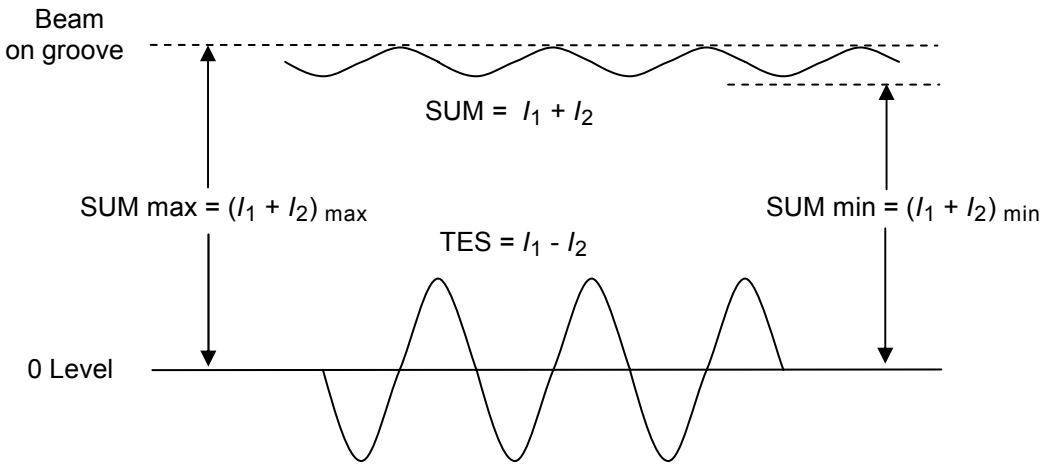

Figure 24 — Signals from grooves in the Radial Tracking Channel

--`,,```,,,,````-`-`,,`,,`,`,,`---
Copyright International Organization for Standardization
Provided by IHS under license with ISO
No reproduction or networking permitted without license from IHS
© ISO/IEC 2008 – All rights reserved
Not for Resale

23 Signals from grooves

The two signals considered in this clause shall be the SUM signal ($I_1 + I_2$) and TES signal ($I_1 - I_2$) (see Figure 24).

23.1 Ratio of SUM max and SUM min signals on groove

The SUM signal on track when the light beam is following a groove in the Formatted Zone shall meet the following requirement:

$$(I_1 + I_2)_{max} / (I_1 + I_2)_{min} \leq 1{,}15$$

23.2 Normalized tracking error signal

The normalized tracking error signal TESnorm: $(I_1 - I_2) / (I_1 + I_2)$ low-passed below the wobble frequency, shall meet the following requirements in unrecorded, grooved areas:

$0{,}24 \leq$ TESnorm pp $\leq 0{,}39$ for Type WORM media

$0{,}36 <$ TESnorm pp $< 0{,}50$ for Type RW media

23.3 Normalized wobble signal

The normalized wobble signal NWS: wobble pp / TES pp low-passed below the wobble frequency shall meet the following requirements in unrecorded, grooved areas

$0{,}33 <$ NWS $< 0{,}48$ for Type WORM media

$0{,}20 <$ NWS $< 0{,}33$ for Type RW media

23.4 Phase depth

The phase depth of the grooves equals

$$\frac{n \times d}{\lambda} \times 360°$$

where n is the index of refraction of the cover layer, d is the groove depth, and λ is the wavelength of the laser. The phase depth shall be less than 90°.

23.5 ADIP error rate

A Sector address shall be failed if it does not have at least 3 of 5 matching Track numbers and 2 of 3 matching Sector numbers with valid ADIP parity.

The ADIP error rate shall be < 0,1%.

© ISO/IEC 2008 – All rights reserved

Copyright International Organization for Standardization
Provided by IHS under license with ISO
No reproduction or networking permitted without license from IHS
Not for Resale

Section 5 — Characteristics of the recording layer

24 Method of testing

Clauses 24 and 25 describe a series of tests to assess the thermal-optical properties of the recording layer, as used for writing, rewriting, and erasing data. The tests shall be performed only in the Data field of the Sectors. The write, rewrite, read, and erase operations necessary for the tests shall be made on the same Reference Drive.

Clauses 24 and 25 specify only the average quality of the recording layer. Local deviations from the specified values, called defects, can cause write or erase problems. These defects are covered in section 6.

24.1 Environment

All signals in Clauses 24 and 25 shall be within their specified ranges with the cartridge in any environment in the range of allowed operating environments defined in 8.1.2 except where otherwise noted.

24.2 Reference Drive

The write, rewrite, and erase tests described in Clauses 24 and 25 shall be measured in the Read Channel of the Reference Drive. The drive shall have the following characteristics for the purpose of these tests.

24.2.1 Optics and mechanics

The focused optical beam shall have the properties defined in 9.2. The disk shall rotate as specified in 9.5.

24.2.2 Read power

The read power shall be 500 μW ± 30 μW for Type WORM media.

The read power shall be 420 μW ± 20 μW for Type RW media.

24.2.3 Read Channel

The Reference Drive shall have a Read Channel that can detect the Phase Change marks in the recording layer. This Channel shall have an implementation equivalent to that given in 9.4.

24.2.4 Tracking

During the measurement of the signals, the focus of the optical beam shall have an axial deviation of not more than

e_{max} (axial) = 59 nm

from the recording layer, and it shall have a radial deviation of not more than

e_{max} (radial) = 14 nm

from the centre of a Recording Track.

© ISO/IEC 2008 – All rights reserved
Copyright International Organization for Standardization
Provided by IHS under license with ISO
No reproduction or networking permitted without license from IHS
Not for Resale

24.3 Write conditions

24.3.1 Write pulse and power waveform

For Type RW and Type WORM media, marks are recorded on the disk by pulses of optical power (see Annex L) at the test rotational frequency. The pulse shape for the purpose of testing shall be nominally rectangular. The rise and fall times (10 % to 90 % or 90 % to 10 %) shall be less than 1,0 ns between any two sequential power levels.

The measurement of laser power shall be done in pulsed operation by averaging. For example, use one pulse every 20 ns with a fixed duty cycle while measuring with a spherical radiometer. The averaging method of measuring the laser power will minimize the accumulation of pulse width and pulse amplitude tolerances. Pulsed operation also enables evaluation of higher laser powers than allowed by the continuous power rating of the laser (see also Annex V).

24.3.2 Write pulse power and pulse timing determination

The media manufacturer shall determine the value of the write pulse power levels and pulse timing parameters for all Data Zones.

For this purpose non-user tracks to the internal diameter of the Zones boundaries shall be used.

These write parameters recorded in the SDI Sectors shall generate written data that complies with the requirements of Clause 27.

The maximum pulse power level used for recording on any disk at any radius shall not exceed 12 mW.

24.4 Erase power for Type RW media

For Type RW media, marks can be erased from the disk by a constant optical power. The erase optical power P_{ER} is also used between write pulses for direct overwriting of the Recording field. The erase power is the optical power required for any given track at the entrance surface to erase or direct overwrite marks written according to 24.3.

The ratio of erase power level P_{ER} to the write first pulse level P_{FW} for recording is recorded in the SDI Sectors for each Zone at the test rotational speed.

The erase power for any disk at any radius shall not exceed 7 mW.

24.4.1 Erase power determination

The media manufacturer shall determine the erase to write power ratios that are recorded in the SDI Sectors. The erase power is the optical power level for the given radius and rotational speed that is sufficient to erase or direct overwrite the current track, without damaging the recording layer or erasing data on the adjacent tracks.

25 Write characteristics

25.1 Mark polarity

The Phase Change marks shall be either more or less reflective than spaces.

The polarity of Phase Change marks shall be specified by the manufacturer in Byte 40 of the SDI Sectors (See 19.2.5).

© ISO/IEC 2008 – All rights reserved

Copyright International Organization for Standardization
Provided by IHS under license with ISO
No reproduction or networking permitted without license from IHS
Not for Resale

25.2 Resolution

I_L is the peak-to-peak value of the signal obtained in the Read Channel from 8T marks and 8T spaces (see Figure 25) written and read under any of the conditions given in 24.3 and 24.2. A 8T is the longest interval allowed in the recording field of a Sector.

I_H is the peak-to-peak value of the signal obtained in the Read Channel from 3T marks and 3T spaces (see Figure 25) written and read under any of the conditions given in 24.3 and 24.2. A 3T is the shortest resolvable interval allowed by the RLL(1,7) code in the recording field of a Sector.

The resolution I_H / I_L shall not be less than 0,15 within any Sector.

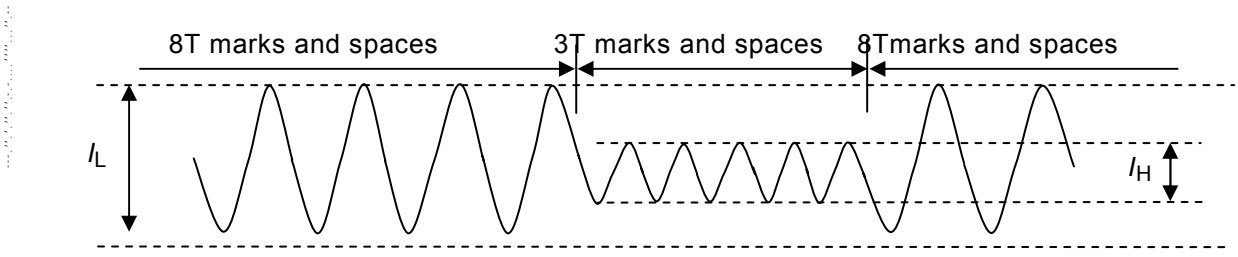

Figure 25 — Definition of I_L and I_H for resolution measurement

25.3 Narrow-Band Signal-to-Noise Ratio

The Narrow-Band Signal-to-Noise Ratio NBSNR is the ratio of the signal level to the noise level of a specified pattern, measured in a 30 kHz bandwidth. It shall be determined as follows.

— Write a series of 3T marks followed by 3T spaces in the Data field of a series of Sectors at a frequency f_0 of the highest resolvable frequency allowed by the RLL(1,7) code for each Zone. The write conditions shall be as specified in 24.3.

— Read the recording fields with the Read Channel under the conditions specified in 24.2 using a spectrum analyzer with bandwidth of 30 kHz. Measure the amplitudes of the signal and noise at frequency f_0 indicated in Figure 26.

The Narrow-Band Signal-to-Noise Ratio shall be

$$\text{NBSNR} = 20 \log_{10} \frac{\text{Signal level}}{\text{Noise level}}$$

The NBSNR shall be greater than 42 dB for all Zones in Type WORM media and 44 dB on Type RW media using the optical system as defined in 9.1.

© ISO/IEC 2008 – All rights reserved
Copyright International Organization for Standardization
Provided by IHS under license with ISO
No reproduction or networking permitted without license from IHS
Not for Resale

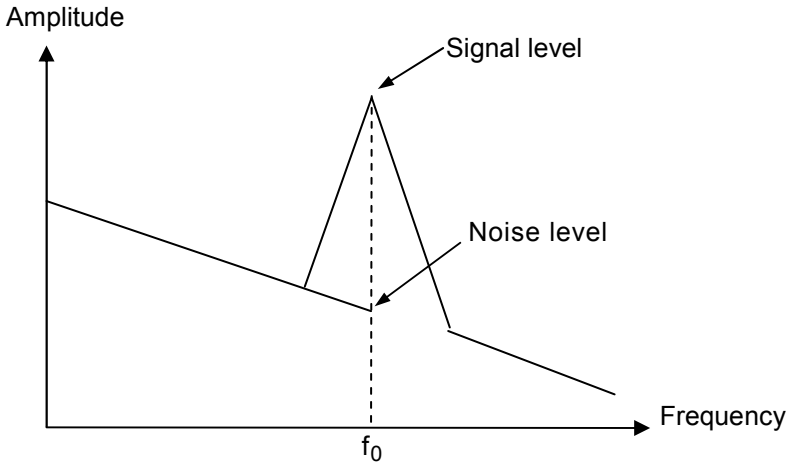

Figure 26 — Amplitude versus frequency for the Phase Change signal

25.4 VTE

For Type WORM media the Optimum Recording Power is defined as that producing minimum VTE, as defined in 9.4.

The Optimum Recording Power for Type WORM media shall be < 8,0 mw.

For Type RW media the Optimum Recording Power is determined by measuring Byte Error Rate as a function of power. The threshold writing power shall be determined as the minimum power that writes data with less than 100 bytes in error in one Sector. The optimum power for writing shall be established as rho times this value where rho shall be defined in Bytes 49 to 51 of the SDI.

The Optimum Recording Power for Type RW media shall be < 9,0 mw.

The VTE at Optimum Recording Power shall be < 7 for type WORM media.

The VTE at Optimum Recording Power for type RW media at the inner diameter shall be < 7.

The VTE at Optimum Recording Power for type RW media at the outer diameter shall be < 10.

25.5 Rewrite cycles for Type RW media

The number of rewrite cycles for Type RW media is not specified by this International Standard.

25.6 Cross Erase and Crosstalk

Cross Erase and Crosstalk characteristics shall be tested as follows:

— Select any group of three adjacent tracks *n*-1, *n* and *n*+1 in the Formatted Zone

- Write the data fields of track n at X% of nominal write power;
- Write the data fields of tracks *n*-1 and *n*+1 (ten times for Type RW media) at Y% of the nominal write power;
- Read the Sectors of track *n*.

--`,,```,,,,````-`-`,,`,,`,`,,`---

© ISO/IEC 2008 – All rights reserved

Copyright International Organization for Standardization
Provided by IHS under license with ISO
No reproduction or networking permitted without license from IHS
Not for Resale

— Repeat the above test for (X,Y) = (85%,115%), (90%,110%), (95%,105%), (110%,115%), (115%,115%) using new tracks for each recording condition.

The average Byte Error Count measure on track *n* for each condition of centre and adjacent track powers shall be < 40.

25.7 Erase ratio

The erase ratio for 3T marks and spaces shall be measured as follow:

— Write a series of 3T marks followed by 3T spaces in the Data field of the sectors on Recording Track at the frequency specified for each band in the Formatted Zone. The write conditions shall be as specified in 24.3.

— Read the recording fields with the Read Channel under the conditions specified in 24.2 using a spectrum analyzer with bandwidth of 30 kHz. Measure the amplitude of the signal at frequency f_0 indicated in Figure 26.

— Erase the Recording Track with one d.c. pass using the optimum erase power as specified in 24.4

— Read the recording fields with the Read Channel under the conditions specified in 24.2 using a spectrum analyzer with bandwidth of 30 kHz. Measure the amplitude of the signal at frequency f_0 indicated in Figure 26.

The difference in amplitude between the written and erased signals shall be lower than - 28 dB.

25.8 Read power damage

Recorded data shall not become damaged due to the repetitive reading of Sectors. Media shall be tested against read power damage for tracks in the innermost band at the test rotational speed. Media shall be tested for read power damage as follows:

— Several Sectors shall be written on the tracks of the innermost band according to 24.3. Sectors shall be selected which are verified as correctable with less than 10 byte errors per Sector using the ECC as defined in annex G.

— The read power shall then be increased to 10% above nominal read power for the appropriate media type. The disk shall make 1 000 000 revolutions while remaining on a single Recording Track which contains the selected Sectors.

— After all test revolutions have completed, the read power shall be returned to the nominal power level. All selected Sectors shall be verified as correctable with less than 10 byte errors per Sector.

Section 6 — Characteristics of user data

26 User data – Method of testing

Clauses 27 and 28 describe a series of measurements to test conformance of the user data on the disk with this International Standard. It checks the legibility of both preformatted data and user written data. The user written data is assumed to be arbitrary. The user written data may have been written by any drive in any environment. The tests shall be performed on the Reference Drive.

Whereas defects are disregarded in Clauses 24 and 25, they are included in Clauses 27 and 28 as unavoidable deterioration of the read signal. The severity of a defect is determined by the correctability of the

--`,,```,,,,````-`-`,,`,,`,`,,`---
© ISO/IEC 2008 – All rights reserved
Copyright International Organization for Standardization
Provided by IHS under license with ISO
No reproduction or networking permitted without license from IHS
Not for Resale

ensuing errors by the error detection and correction circuits in the Read Channel defined below. The requirements in Clauses 27 and 28 define a minimum quality of the data, necessary for data interchange.

26.1 Environment

All requirements specified in Clauses 27 and 28 shall be within their specified ranges with the cartridge in any environment in the range of allowed operating environments defined in 8.1.2. It is recommended that before testing, the entrance surface of the optical disk shall be cleaned according to the instructions of the manufacturer of the disk.

26.2 Reference Drive

All requirements specified in Clauses 27 and 28 shall be measured in the Reference Drive. The drive shall have the following characteristics for the purpose of these tests:

26.2.1 Optics and mechanics

The focused optical beam shall have the properties specified in 9.2. The disk shall rotate as specified in 9.5.

26.2.2 Read power

The read power shall be 500 μW ± 30 μW for Type WORM media.

The read power shall be 420 μW ± 20 μW for Type RW media.

26.2.3 Read Channel

The Read Channel shall be as specified in 9.3.

26.2.4 Tracking

During the measurement of the signals, the focus of the optical beam shall have an axial deviation of not more than

e_{max} (axial) = 59 nm

from the recording layer, and it shall have a radial deviation of not more than

e_{max} (radial) = 14 nm

from the centre of a Recording Track.

26.2.5 Error correction

Correction of errors in the data bytes shall be carried out by an error detection and correction system based on the specifications of Annex G.

27 Minimum quality of a Sector

This clause specifies the minimum quality of data of a Sector as required for interchange of the data contained in that Sector.

A byte error occurs when one or more bits in a byte have a wrong setting, as detected by ECC and/or CRC circuits.

© ISO/IEC 2008 – All rights reserved

Copyright International Organization for Standardization
Provided by IHS under license with ISO
No reproduction or networking permitted without license from IHS
Not for Resale

27.1 Preformatted data

The wobble signal shall comply with the requirements of 23.3.

27.2 User-written data

27.2.1 Recording field

When the Preamble field is recorded, it shall start 6540 Channel bits ± 12 Channel bits after the first Channel bit of WAMFA Sync1 Frame for Type WORM media.

When the Preamble field is recorded, it shall start 6256 Channel bits - 12 / + 267 Channel bits after the first Channel bit of WAMFA Sync1 Frame for Type RW media.

27.2.2 Byte errors

The user written data in a Sector shall not contain any byte errors that cannot be corrected by the error correction defined in 16.7.3.

28 Data interchange requirements

A disk offered for interchange of data shall comply with the following requirements.

28.1 Tracking

The focus of the optical beam shall not jump tracks unintentionally.

28.2 User-written data

Any Sector written in the User Zone that does not comply with 28.2 shall have been replaced according to the rules of the Defect Management as defined in Clause 21.

28.3 Quality of disk

The quality of the disk is reflected in the number of replaced Sectors in the User Zone. This International Standard allows a maximum number of replaced Sectors per side (see Clause 21).

© ISO/IEC 2008 – All rights reserved
Copyright International Organization for Standardization
Provided by IHS under license with ISO
No reproduction or networking permitted without license from IHS
Not for Resale

Annex A
(normative)

Air cleanliness class 100 000

The classification of air cleanliness is based on a particle count with a maximum allowable number of specified minimum sized particles per unit volume, and on a statistical average particle size distribution.

A.1 Definition

The particle count shall not exceed a total of 3 500 000 particles per cubic metre of a size 0,5 µm and larger.

The statistical average particle size distribution is given in Figure A.1. Class 100 000 means that 3 500 000 particles per cubic metre of a size of 0,5 µm and larger are allowed, but only 25 000 particles per cubic metre of a size of 5,0 µm and larger.

It shall be recognized that single sample distribution may deviate from this curve because of local or temporary conditions. Counts below 350 000 particles per cubic metre are unreliable except when a large number of samplings is taken.

A.2 Test method

For particles of size in the range of 0,5 µm to 5,0 µm, equipment employing light-scattering principles shall be used. The air in the controlled environment is sampled at a known flow rate. Particles contained in the sampled air are passed through an illuminated sensing zone in the optical chamber of the instrument. Light scattered by individual particles is received by a photo detector that converts the light pulses into electrical current pulses. An electronic system relates the pulse height to particle size and counts the pulses such that the number of particles in relation to particle size is registered or displayed.

© ISO/IEC 2008 – All rights reserved

Copyright International Organization for Standardization
Provided by IHS under license with ISO
No reproduction or networking permitted without license from IHS
Not for Resale

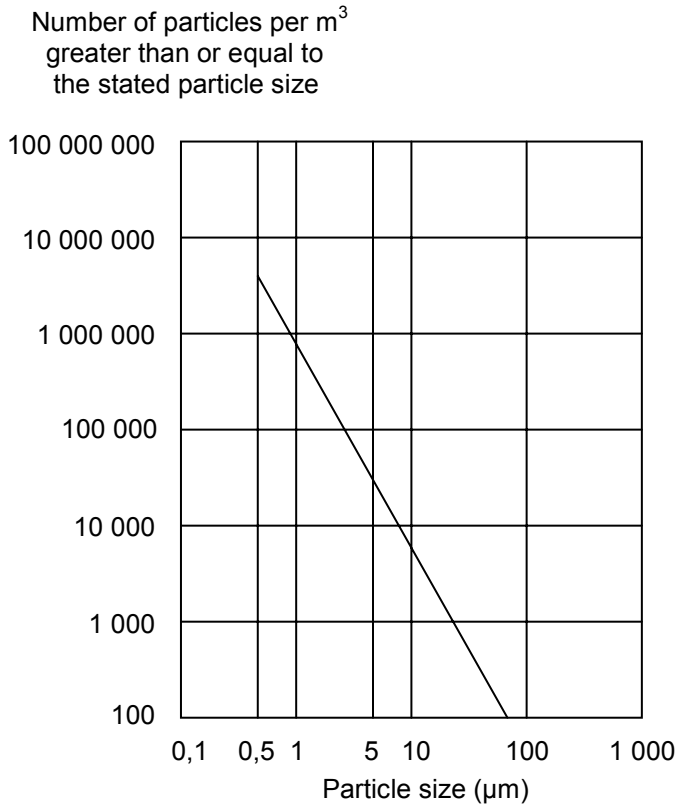

Figure A.1 — Particle size distribution curve

© ISO/IEC 2008 – All rights reserved
Copyright International Organization for Standardization
Provided by IHS under license with ISO
No reproduction or networking permitted without license from IHS
Not for Resale

Annex B
(normative)

Read Channel signal equalization

B.1 Read Channel analog equalization

The Read Channel signal shall be equalized by an analog pre-equalizer.

The analog pre-equalizer shall be a 7-pole linear phase with equiripple error of 0,05º low-pass filter with a -3db cut-off frequency of half the Channel clock frequency. The transfer function of the filter shall be:

$$\frac{-0{,}75s^2 + 1.31703}{s^2 + 1{,}68495s + 1{,}31703} \quad \frac{2{,}95139}{s^2 + 1{,}54203s + 2{,}95139} \quad \frac{5{,}37034}{s^2 + 1{,}14558s + 5{,}37034} \quad \frac{0{,}86133}{s + 0{,}86133}$$

where the transfer function is normalized to ω = 1 rad/sec and

$s = i\,\omega,\ \omega = 2\pi f,\ i = \sqrt{-1}$

The corresponding frequency characteristics are shown in Figure B.1.

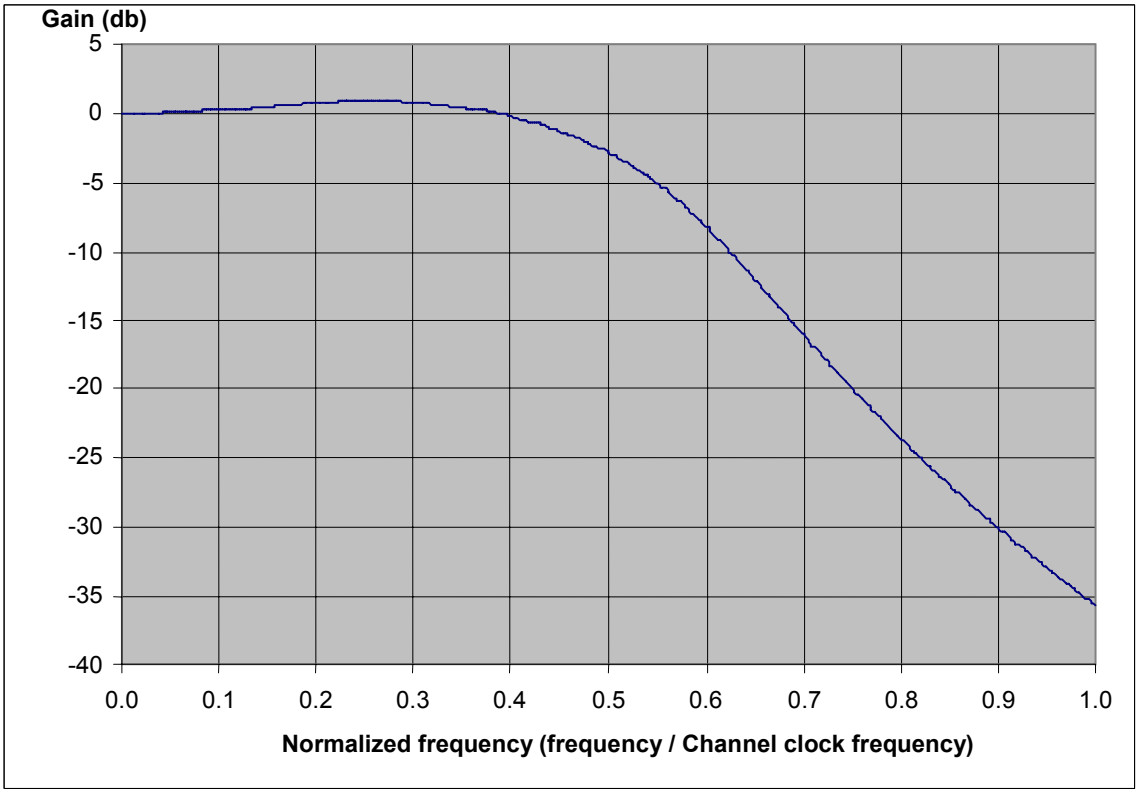

Figure B.1 — Frequency characteristics of the analog equalizer

© ISO/IEC 2008 – All rights reserved

Copyright International Organization for Standardization
Provided by IHS under license with ISO
No reproduction or networking permitted without license from IHS
Not for Resale

The analog equalizer shall comply with the following requirements:

Gain variation ≤ ± 1,0 dB for normalized frequency ≤ 1,0,

Group delay variation ≤ ± 0,025 Channel clock period for normalized frequency ≤ 0,5,

B.2 Read Channel digital equalization

The read signal shall be additionally equalized by a digital 21 tap transversal filter. The tap coefficients shall be calculated using a Least Mean Square (LMS) algorithm. The coefficients shown in Table B.1 shall be used for all media compliance testing, and as the initial condition for the adaptive equalizer. The corresponding frequency characteristics of the digital equalizer are shown in Figure B.2.

Table B.1 — Coefficients for media test condition

Transversal Filter Tap	Equalizer Coefficient	8 bits signed value - 128 to 127
- 10T	0,00000	0
- 9T	0,00000	0
- 8T	0,00000	0
- 7T	0,00000	0
- 6T	0,00000	0
- 5T	0,00000	0
- 4T	0,00000	0
- 3T	0,00000	0
- 2T	- 0,25000	- 32
- 1T	0,25000	32
0	0,99219	127
1T	0,25000	32
2T	- 0,25000	- 32
3T	0,00000	0
4T	0,00000	0
5T	0,00000	0
6T	0,00000	0
7T	0,00000	0
8T	0,00000	0
9T	0,00000	0
10T	0,00000	0

T = Channel clock period

© ISO/IEC 2008 – All rights reserved
Copyright International Organization for Standardization
Provided by IHS under license with ISO
No reproduction or networking permitted without license from IHS
Not for Resale

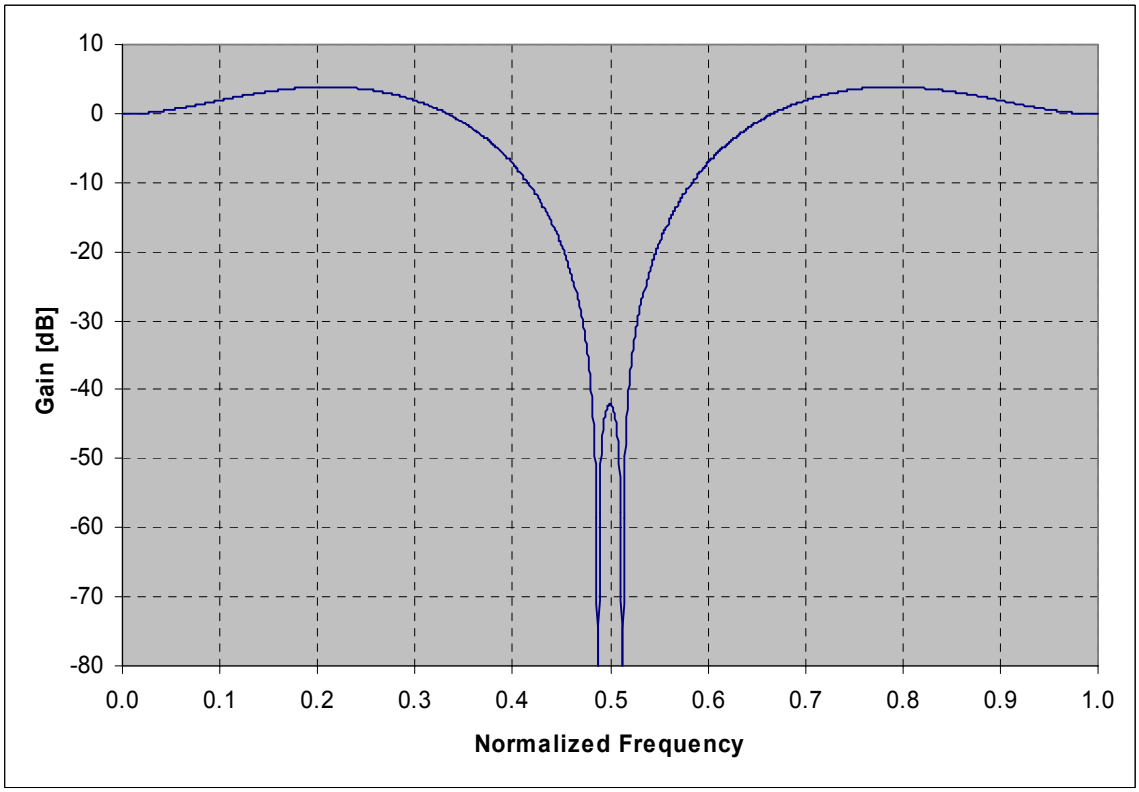

Figure B.2 — Frequency characteristics of the digital equalizer

© ISO/IEC 2008 – All rights reserved

Copyright International Organization for Standardization
Provided by IHS under license with ISO
No reproduction or networking permitted without license from IHS
Not for Resale

Annex C
(normative)

Edge distortion test

C.1 Purpose

The distortion test checks if the case is free from unacceptable distortion and protrusions along its edges. The test is made by causing the cartridge to pass through the vertical slot of a gauge while applying a specified force in addition to the gravitational pull.

C.2 Distortion gauge construction

The gauge shall be made of a suitable material, e.g. of chrome-plated carbon steel. The inner surfaces shall be polished to a surface finish of 5 µm peak-to-peak.

C.3 Distortion gauge dimensions

The dimensions shall be as follows (see Figure C.1):

A = 155,0 mm

B = 136,0 mm ± 0,1 mm

C = 10,0 mm ± 0,1 mm

D = 11,40 mm ± 0,01 mm

E = 11,60 mm min.

C.4 Requirement

When the cartridge is inserted vertically into the gauge, a vertical downward force F of 2,7 N maximum, applied to the centre of the top edge of the cartridge, shall cause the cartridge to pass through the gauge.

© ISO/IEC 2008 – All rights reserved
Copyright International Organization for Standardization
Provided by IHS under license with ISO
No reproduction or networking permitted without license from IHS
Not for Resale

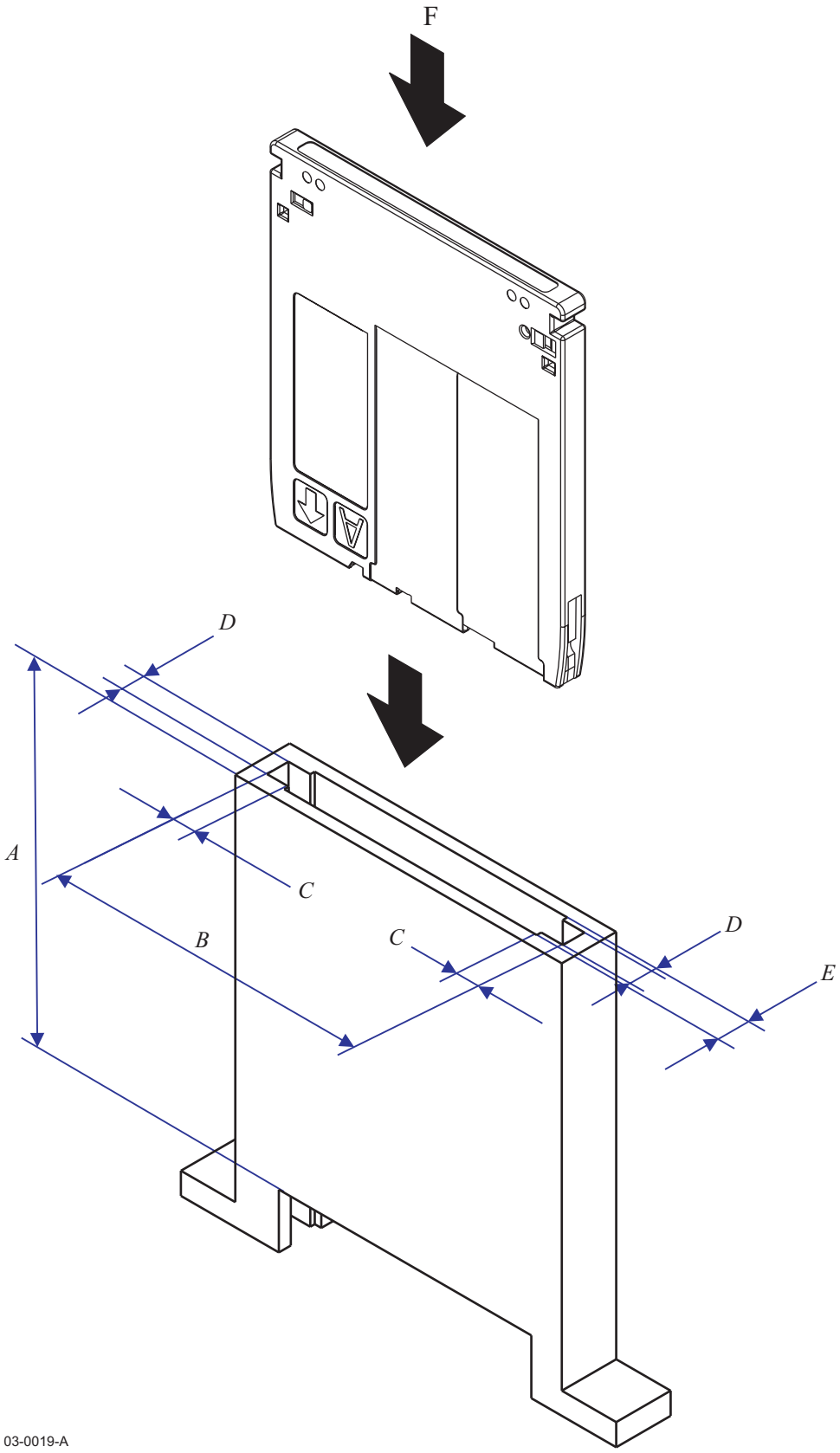

Figure C.1 — Distortion gauge

© ISO/IEC 2008 – All rights reserved
Copyright International Organization for Standardization
Provided by IHS under license with ISO
No reproduction or networking permitted without license from IHS
Not for Resale

Annex D
(normative)

Compliance test

D.1 Purpose

The compliance test checks the flatness and flexibility of the case by forcing the four reference surfaces of the cartridge into a plane.

D.2 Reference surfaces

The location of the four reference surfaces S1, S2, S3, and S4 is defined in 10.5.4 and Figure 4.

D.3 Compliance gauge

The test gauge consists of a base plate on which four posts P1, P2, P3, and P4 are fixed so as to correspond to the surfaces S1, S2, S3, and S4 respectively (see Figure D.1). The dimensions are as follows (see Figures D.2 and D.3):

L_a = 122,0 mm ± 0,2 mm

L_b = 4,0 mm ± 0,5 mm

L_c = 130,0 mm ± 0,5 mm

L_d = 101,0 mm ± 0,5 mm

D_a = 6,50 mm ± 0,01 mm

$D_b = 4{,}00\ ^{+\ 0{,}00\ \text{mm}}_{-\ 0{,}02\ \text{mm}}$

D_c = 5,50 mm ± 0,01 mm

H_a = 1,0 mm ± 0,1 mm

H_b = 2,0 mm max.

After assembly, the upper annular surfaces of the four posts shall lie between two horizontal planes spaced 0,01 mm apart.

D.4 Test conditions

The cartridge shall be placed with its reference surfaces onto the posts of the horizontal gauge. A vertical down force F of 0,4 N shall be exerted on the cartridge opposite each of the four posts.

© ISO/IEC 2008 – All rights reserved
Copyright International Organization for Standardization
Provided by IHS under license with ISO
No reproduction or networking permitted without license from IHS
Not for Resale

D.5 Requirement

Under the conditions of D.4, any three of the four surfaces S1 to S4 shall be in contact with the annular surface of respective posts. Any gap between the remaining surface S and the annular surface of its post shall not exceed 0,1 mm.

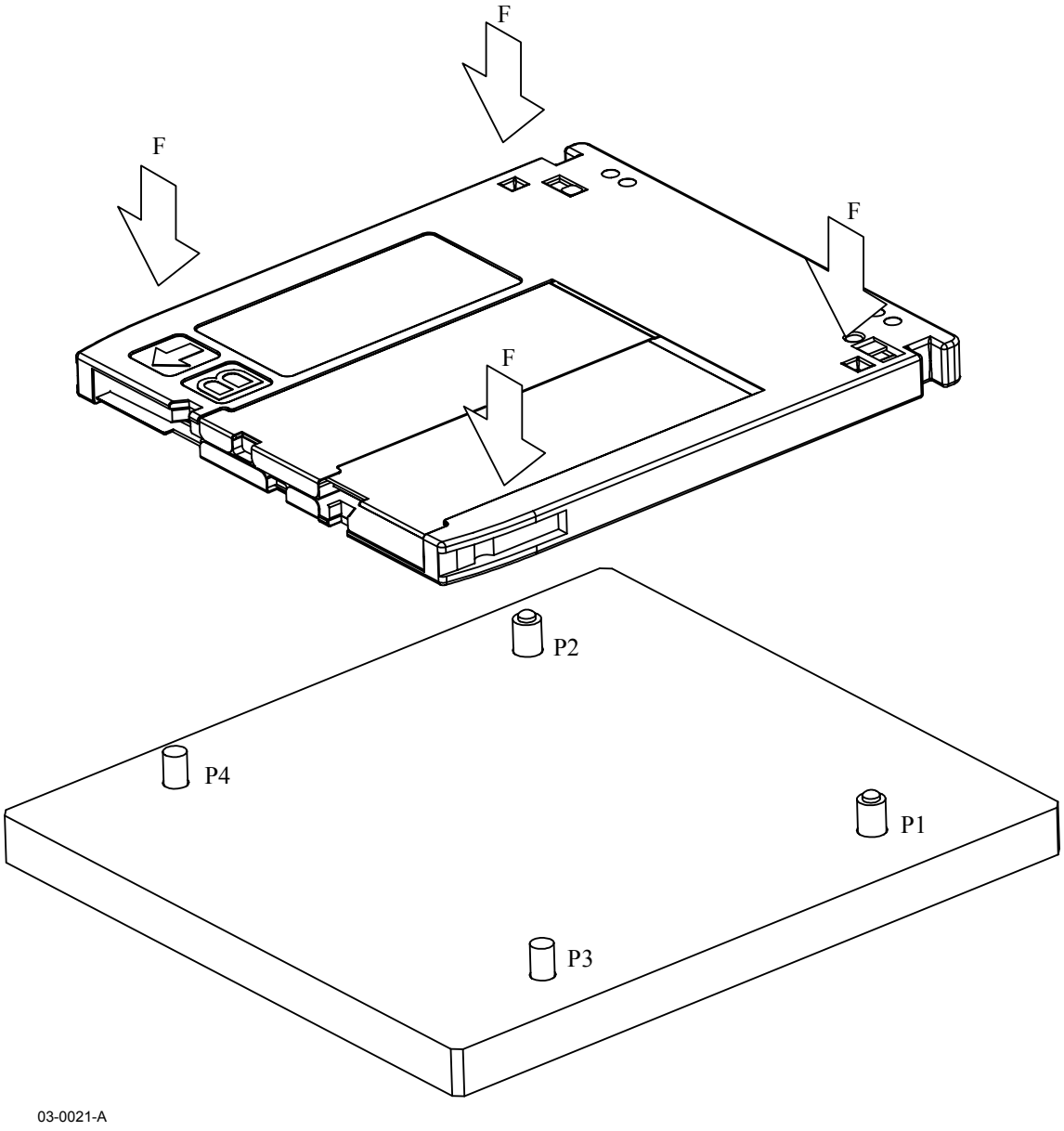

Figure D.1 — Compliance gauge

© ISO/IEC 2008 – All rights reserved

Copyright International Organization for Standardization
Provided by IHS under license with ISO
No reproduction or networking permitted without license from IHS
Not for Resale

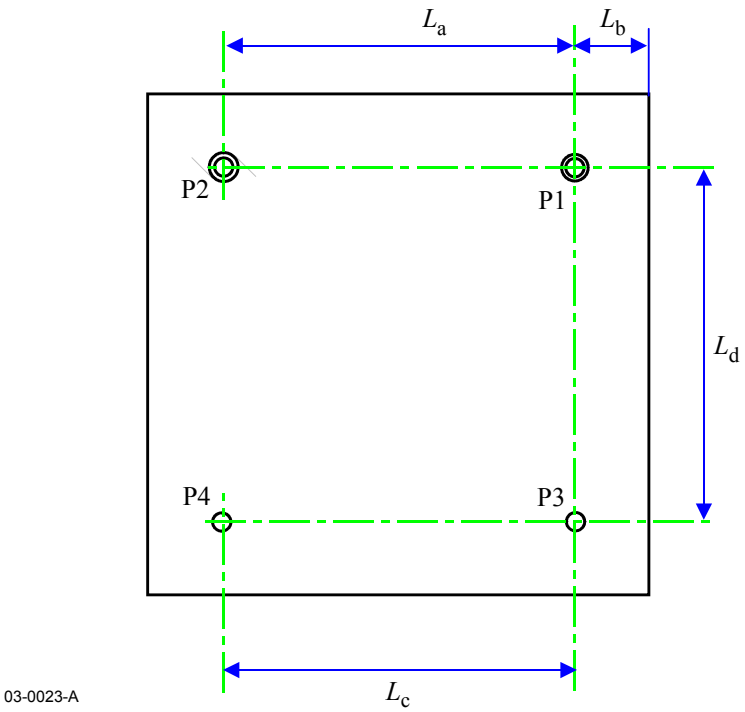

Figure D.2 — Location of the posts

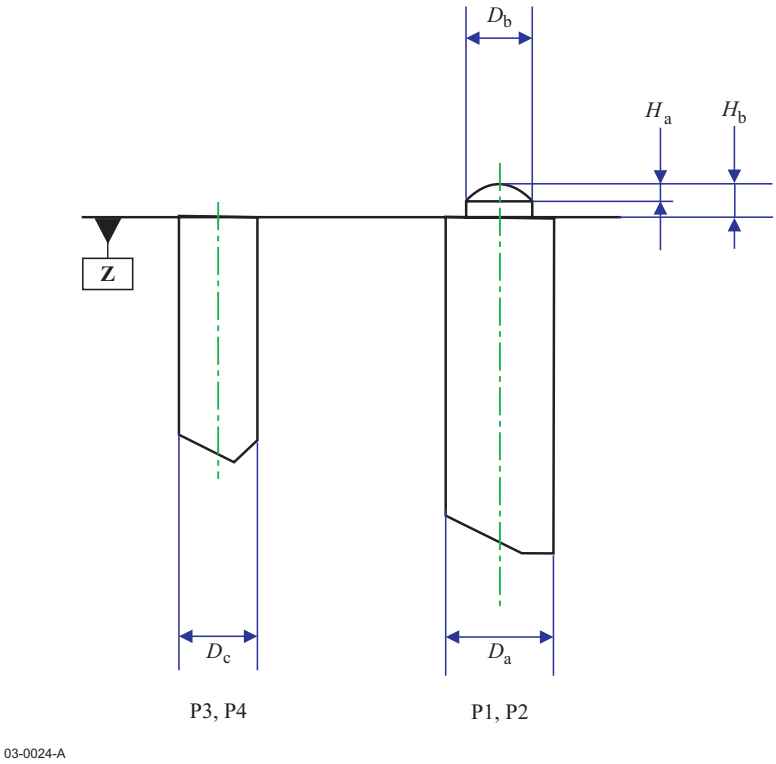

Figure D.3 — Detail of the posts

--`,,```,,,,````-`-`,,`,,`,`,,`---

Copyright International Organization for Standardization
Provided by IHS under license with ISO
No reproduction or networking permitted without license from IHS
© ISO/IEC 2008 – All rights reserved
Not for Resale

Annex E
(normative)

Cartridge electro-static discharge test

E.1 Test procedure

The test procedure shall use the following steps:

1 Acclimate test cartridges at 10 % relative humidity for at least 12 hours before testing.

2 Remove all charge from the test cartridge using ionized air.

3 Mount the cartridge in the fixture shown in Figure E.1.

4 Apply 1,00 kV to the charge plate.

5 10 seconds ± 1 second after applying 1,00 kV, remove the voltage source (charge plate is floating).

6 Measure the decay time defined as the time required for the charged plate voltage to decay 5 % to 950 V.

Prior to testing a cartridge, ensure there is a non-ionizing environment by performing steps 4–6 above with no cartridge present. Decay time with no cartridge shall be larger than 100 seconds.

E.2 Specification

The decay time shall be smaller than 10 seconds at 10 % relative humidity and 25 °C.

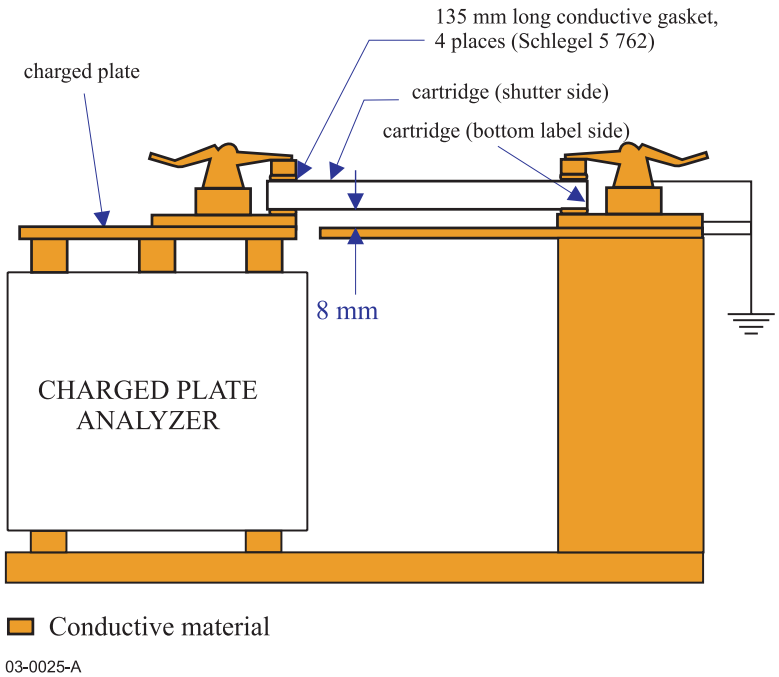

Figure E.1 — Cartridge electro-static discharge test fixture

Copyright International Organization for Standardization
Provided by IHS under license with ISO
No reproduction or networking permitted without license from IHS
© ISO/IEC 2008 – All rights reserved
Not for Resale

Annex F
(normative)

Test method for measuring the adsorbent force of the hub

F.1 Purpose

The purpose of this test is to determine the magnetic characteristic of the magnetizable material of the hub.

F.2 Dimensions

The test device (see Figure F.1) consists of a spacer, a magnet, a back yoke, and a centre shaft. The dimensions of the test device are as follows:

D_d = 8,0 mm $\pm$ 0,1 mm

D_e = 20,0 mm $\pm$ 0,1 mm

D_f = 19,0 mm max.

$D_g = 3{,}9\ ^{+0{,}0\ \text{mm}}_{-0{,}1\ \text{mm}}$

H_c = 0,40 mm $\pm$ 0,01 mm

H_d = 1,2 mm (typical, to be adjusted to meet the force requirement of F.4)

F.3 Material

The material of the test device shall be:

Magnet : Any magnetizable material, typically Sm-Co

Back yoke : Any suitable magnetizable material

Spacer : Non-magnetizable material or air gap

Centre shaft : Non-magnetizable material

F.4 Characteristics of the magnet with back yoke

Number of poles : 4 (typical)

Maximum energy product (BH_{max}) : 175 kJ/m^3 $\pm$ 16 kJ/m^3

The characteristics of the magnet with back yoke shall be adjusted so that with a pure nickel plate of the following dimensions (see Figure F.2), and the adsorbent force of this plate at the point H_c = 0,4 mm when spaced from the magnet surface shall be 9,5 N $\pm$ 0,6 N.

© ISO/IEC 2008 – All rights reserved
Copyright International Organization for Standardization
Provided by IHS under license with ISO
No reproduction or networking permitted without license from IHS
Not for Resale

D_h = 7,0 mm ± 0,1 mm

D_j = 22,0 mm ± 0,1 mm

H_e = 2,0 mm ± 0,05 mm

F.5 Test condition for temperature

This condition shall be as specified in 8.1.1.

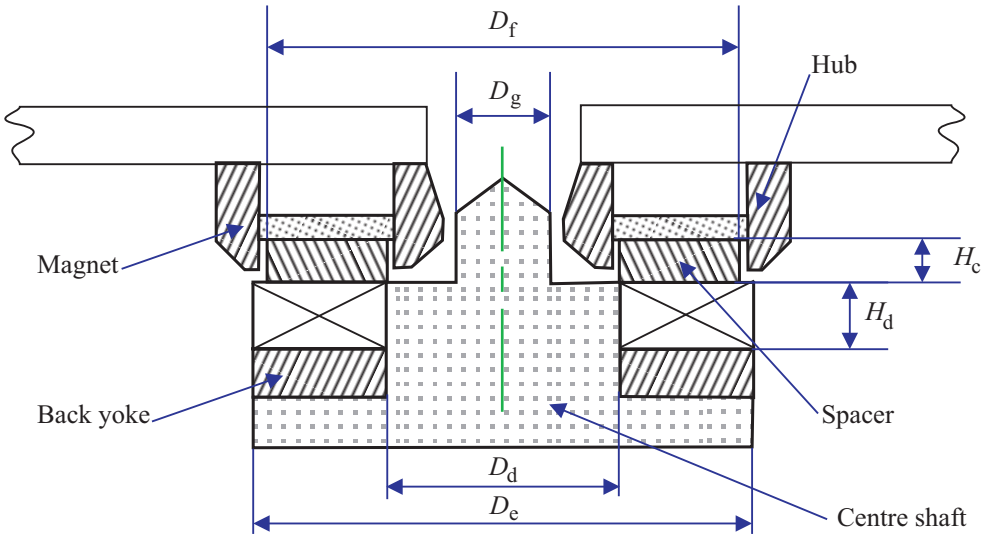

Figure F.1 — Test device for the clamping characteristic of the hub

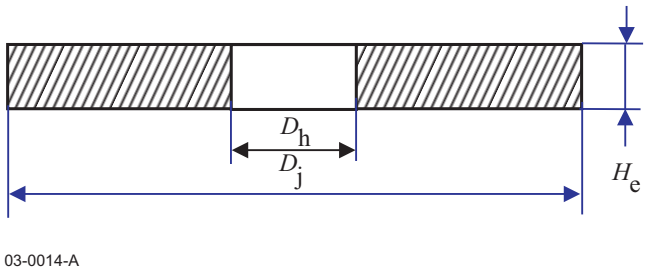

Figure F.2 — Calibration plate of the test device

© ISO/IEC 2008 – All rights reserved
Copyright International Organization for Standardization
Provided by IHS under license with ISO
No reproduction or networking permitted without license from IHS
Not for Resale

Annex G
(normative)

Interleave, CRC, ECC for the Data field

G.1 Interleave

The different bytes recorded on the disk for each Sector with 8192 data-user bytes shall be designated as follows

D_n are user data bytes

$P_{q,r}$ are Control bytes (See 16.7.4)

C_k are CRC check bytes

$E_{s,t}$ are ECC check bytes

These bytes shall be ordered in a sequence A_n in the order in which they shall be recorded on the disk. The order of n of D_n is the same as that in which they are input from the interface. Depending on the value of n, these elements are

for $1 \le n \le 8\,192$: $A_n = D_n$

for $8\,193 \le n \le 8\,204$: $A_n = P_{q,r}$

for $8\,205 \le n \le 8\,208$: $A_n = C_k$

for $8\,209 \le n \le 9\,424$: $A_n = E_{s,t}$

where:

$q = \text{int}\,[(n - 8\,193) / 4] + 1$

$r = [(n - 8\,193) \bmod 4] + 1$

$k = n - 8\,204$

$s = [(n - 8\,209) \bmod 38] + 1$

$t = \text{int}\,[(n - 8\,209) / 38] + 1$

The notation int [x] denotes the largest integer not greater than x.

The first four parts of A_n are 38-way interleaved by mapping them onto a two-dimensional matrix B_{ij} with 216 rows and 38 columns. Thus

for $1 \le n \le 8\,208$: $B_{i,j} = A_n$

where:

$i = 215 - \text{int}\,[(n - 1) / 38]$

© ISO/IEC 2008 – All rights reserved
Copyright International Organization for Standardization
Provided by IHS under license with ISO
No reproduction or networking permitted without license from IHS
Not for Resale

$j = (n - 1) \bmod 38$

G.2 CRC

The CRC and the ECC shall be computed over the Galois field based on the primitive polynomial

$$G_P(x) = x^8 + x^4 + x^3 + x^2 + 1$$

The generator polynomial for the CRC bytes shall be

$$G_C(x) = \prod_{i=32}^{i=35} (x + \alpha^i) = x^4 + (68)\, x^3 + (69)\, x^2 + (F1)\, x + (DA)$$

where the element α = 0000 0010.

The contents of the four check bytes are defined by the residual polynomial

$$R_C(x) = I_C(x)\, x^4 \bmod G_C(x)$$

$$R_C(x) = \sum_{k=1}^{k=4} C_k\, x^{4-k}$$

The last equation specifies the storage locations for the coefficients of the polynomial.

G.2.1 Check byte calculation

The four check bytes of CRC shall be computed over the user data and the Control bytes as specified in G.2.

The information polynomial shall be

$$I_C(x) = \left[\sum_{i=1}^{i=215} \left(\sum_{j=0}^{j=37} (B_{i,j})\, x^j \right) \right] + \sum_{j=0}^{j=33} (B_{0,j})$$

G.3 ECC

The primitive polynomial $G_P(x)$ and the element α^i shall be as specified in G.2. The generator polynomial for the check bytes of the ECC shall be

$$G_E(x) = \prod_{i=0}^{i=31} (x + \alpha^i)$$

where the element α = 0000 0010.

The 1216 check bytes of the ECC shall be computed over the user bytes, the Control bytes, and the CRC bytes. The corresponding 38 information polynomials shall be

-`,,```,,,,````-`-,,`,,`,`,,`---

© ISO/IEC 2008 – All rights reserved

Copyright International Organization for Standardization
Provided by IHS under license with ISO
No reproduction or networking permitted without license from IHS
Not for Resale

$$I_{Ej}(x) = \sum_{i=0}^{i=215} (B_{i,j})\, x^{i}$$

where $0 \leq j \leq 37$.

The contents of the 32 check bytes $E_{s,t}$ for each polynomial $I_{Ej}(x)$ are defined by the residual polynomial

$$R_{Ej}(x) = I_{Ej}(x)\, x^{32} \bmod G_E(x)$$

$$R_{Ej}(x) = \sum_{t=1}^{t=32} E_{j+1,t}\, x^{32-t}$$

The last equation specifies the storage locations for the coefficients of the polynomial.

© ISO/IEC 2008 – All rights reserved
Copyright International Organization for Standardization
Provided by IHS under license with ISO
No reproduction or networking permitted without license from IHS
Not for Resale

Annex H
(normative)

Drive Information Record (DIR) usage

The 4-byte Drive Information Record (P3) of the Control bytes shall be used to save drive related information into each Sector as it is written or rewritten.

For normally written Sectors, the DIR shall contain the following information in the specified location:

Byte 1

Bit position	7	6	5	4	3	2	1	0
	Reformat count bit 1	Verify enabled	Verify Pass Relocation	Relocation cause				

Byte 2

Bit position	7	6	5	4	3	2	1	0
	Reformat count bit 0	Relocation attempt			Unspecified			Drive Serial Number bit 16

Byte 3

Bit position	7	6	5	4	3	2	1	0
	Drive Serial Number bits 15–8							

Byte 4

Bit position	7	6	5	4	3	2	1	0
	Drive Serial Number bits 7–0							

Unspecified bits shall be set to ZERO and shall be ignored in interchange.

The Verify Enabled bit shall indicate whether the Sector was written with Verify after Write enabled, as follows:

Verify after Write disabled = ZERO

Verify after Write enabled = ONE.

The Verify Pass Relocation bit shall be set to ZERO for all Sectors that have not been relocated.

The Verify Pass Relocation bit shall indicate whether a relocated Sector was spared due to a Verify error, as follows:

© ISO/IEC 2008 – All rights reserved

Copyright International Organization for Standardization
Provided by IHS under license with ISO
No reproduction or networking permitted without license from IHS
Not for Resale

Write Error Relocation = ZERO

Verify Error Relocation = ONE.

The Relocation Cause field is vendor unique, and may be used to identify the reason for relocating the Sector. The Relocation Cause field shall be ignored in interchange.

The Relocation Attempt field shall be set to ZERO for all Sectors that have not been relocated.

The Relocation Attempt field shall contain the number of the relocation attempt for all relocated Sectors as follows:

Attempt 1 = 0

Attempt 2 = 1

….....

Attempt 8 = 7

The Drive Serial Number is vendor unique and shall be ignored in interchange.

For SDI, DDS, PDL, and SDL Sectors, the Verify Pass Relocation, Relocation Cause, and Relocation Attempt fields shall be set to ZERO.

© ISO/IEC 2008 – All rights reserved
Copyright International Organization for Standardization
Provided by IHS under license with ISO
No reproduction or networking permitted without license from IHS
Not for Resale

Annex I
(normative)

Specific Disk Information

SDI Sectors contain Specific Disk Information. The 8 192 data bytes shall specify the following:

Bytes 0 and 1: SDI Sector Identifier

These bytes shall be both recorded with (D2h).

Bytes 2 to 6: Disk Serial Number and Disk Side (A or B)
The Disk Serial Number shall be the same for both the A and B sides of the disk. The serial number and side of the disk shall be represented in hexadecimal notation as shown in Table I.1.

Table I.1 — Representation of Disk Serial Number and Disk Side (A or B)

Byte	Bits	Description	Allowed values
2	7–4	1st digit of Disk Serial Number	(0h–Fh)
2	3–0	2nd digit of Disk Serial Number	(0h–Fh)
3	7–4	3rd digit of Disk Serial Number	(0h–Fh)
3	3–0	4th digit of Disk Serial Number	(0h–Fh)
4	7–4	5th digit of Disk Serial Number	(0h–Fh)
4	3–0	6th digit of Disk Serial Number	(0h–Fh)
5	7–4	7th digit of Disk Serial Number	(0h–Fh)
5	3–0	8th digit of Disk Serial Number	(0h–Fh)
6	7–4	9th digit of Disk Serial Number	(0h–Fh)
6	3–0	Disk Side	(Ah or Bh)

Bytes 7: SDI Revision number
The SDI Revision number may be used by the disk manufacturer to denote the use of the Unspecified SDI bytes.

Bytes 8 to 15: SDI Revision number
These eight bytes shall contain the disk manufacturer code in ASCII representation.

Byte 16: Year of disk manufacture
It shall be specified as a number *n* such that *n* = year - 2000.

Byte 17: Month of disk manufacture
This byte shall be recorded with the month number (1 for January, 12 for December).

© ISO/IEC 2008 – All rights reserved

Copyright International Organization for Standardization
Provided by IHS under license with ISO
No reproduction or networking permitted without license from IHS
Not for Resale

Byte 18: Day of manufacture
This byte shall be recorded with a value in the range from 1 to 31.

Bytes 19 to 22: Drive Serial Number (DSN) of the unit that recorded the SDI Sectors
The serial number of the drive shall be represented in binary notation. Byte 19 shall contain the MSB and Byte 22 shall contain the LSB.

Byte 23: Media Type
Bit 0: '0' for Type RW, '1' for Type WORM.
Bit 1: '1' indicates that the disk is qualified for ZCAV mode.
Bit 2: '1' indicates that the disk is qualified for ZCLV mode.

Bytes 24 and 25: User data capacity of the ODC
The capacity of the ODC expressed in Gbytes shall be represented in binary notation. Byte 24 shall contain the MSB and Byte 25 shall contain the LSB. The value shall be set to (003Ch) indicating a user data capacity of 60 Gbytes per cartridge.

Byte 26: Sector size
This byte shall be recorded with a number *n* such that *n = Sector size in user data bytes* / 1024.
It shall be set to 8 indicating a Sector size of 8 192 user data bytes.

Byte 27: Track pitch
This byte shall be recorded with a number *n* such that *n = track pitch in nm* / 5.
It shall be set to 64 for Type RW media indicating a recording track pitch of 320 nm.
It shall be set to 70 for Type WORM media indicating a recording track pitch of 350 nm.

Byte 28: Nominal wavelength λ of the laser
This byte shall be recorded with a number *n* such that *n = λ in nm* / 5.
It shall be set to 81 indicating a laser wavelength of λ = 405 nm.

Byte 29: Nominal Numerical Aperture NA of the objective lens
This byte shall be recorded with a number *n* such that *n = NA* × 100.
It shall be set to 85 indicating an objective lens with NA = 0,85.

Bytes 30 and 31: Nominal cover layer index of refraction
These bytes shall be recorded with a number *n* such that *n = index of refraction* × 10 000.
Byte 30 shall contain the MSB and Byte 31 shall contain the LSB of the number *n*.

Byte 32: Nominal cover layer thickness
This byte shall be recorded with a number *n* such that *n = Nominal cover layer thickness in nm*.

Byte 33: Average cover layer thickness at disk radius r = 62 mm
This byte shall be recorded with a number *n* such that *n = Average cover layer thickness in nm at disk radius r = 62 mm.*

Byte 34: Average cover layer thickness at disk radius r = 45 mm
This byte shall be recorded with a number *n* such that *n = Average cover layer thickness in nm at disk radius r = 45 mm.*

Byte 35: Average cover layer thickness at disk radius r = 28 mm
This byte shall be recorded with a number *n* such that *n = Average cover layer thickness in nm at disk radius r = 28 mm.*

Byte 36: Nominal disk rotational frequency
This byte shall be recorded with a number *n* such that *n = rotational frequency in Hz* × 4.

Byte 37: Nominal laser read power
This byte shall be recorded with a number *n* such that *n = read power in µW* / 5.
It shall be set to 84 for Type WORM media indicating a laser read power of 420 µW.
It shall be set to 100 for Type RW media indicating a laser read power of 500 µW.

Byte 38: Maximum read power
This byte shall be recorded with a number *n* such that *n = max read power in µW* / 5.
This value shall be the recommendation of the media manufacturer for maximum read power at any radius of the disk.

© ISO/IEC 2008 – All rights reserved
Copyright International Organization for Standardization
Provided by IHS under license with ISO
No reproduction or networking permitted without license from IHS
Not for Resale

Byte 39: Baseline reflectance R of the disk in its unrecorded initialized state as measured in a Mirror Area
This byte shall be recorded with a number *n* such that $n = R \times 100$

Byte 40: Change in reflectance R for user written marks
This byte shall be recorded with
(00h) for Rmark > Rspace
(FFh) for Rmark < Rspace

Byte 41 to 44: for RW media, Zones of the disk that can be recorded with a single pass write
This information shall be contained in a bit map, as shown in Table I.2, where:
0 Indicates Zone may be recorded in a single pass write,
1 Indicates Zone requires an erase pass prior to writing.

Table I.2 — Bit map of bytes 41 to 44

41	Bit 7 is for Zone 0, Bit 6 is for Zone 1, ----------, Bit 0 is for Zone 7
42	Bit 7 is for Zone 8, Bit 6 is for Zone 9, ----------, Bit 0 is for Zone 15
43	Bit 7 is for Zone 16, Bit 6 is for Zone 17, -------, Bit 0 is for Zone 23
44	Bit 7 is for Zone 24, Bit 6 is for Zone 25, -------, Bit 0 is for Zone 31

For WORM media, Bytes 41 to 44 shall be recorded with (00h).

Byte 45: Reserved

Byte 46: VTE based ρ-factor (Optimal Write Power / Minimum VTE Write Power) for the outer diameter
This byte shall be recorded with a number *n* such that $n = \rho \times 100$.

Byte 47: VTE based ρ-factor (Optimal Write Power / Minimum VTE Write Power) for the middle diameter
This byte shall be recorded with a number *n* such that $n = \rho \times 100$.

Byte 48: VTE based ρ-factor (Optimal Write Power / Minimum VTE Write Power) for the inside diameter
This byte shall be recorded with a number n such that $n = \rho \times 100$

Byte 49: BER based ρ-factor (Optimal Write Power / Write Power for BERC<50) for the outer diameter
This byte shall be recorded with a number *n* such that $n = \rho \times 100$.

Byte 50: BER based ρ-factor (Optimal Write Power / Write Power for BERC<50) for the middle diameter
This byte shall be recorded with a number *n* such that $n = \rho \times 100$.

Byte 51: BER based ρ-factor (Optimal Write Power / Write Power for BERC<50) for the inside diameter
This byte shall be recorded with a number *n* such that $n = \rho \times 100$.

Byte 52: Write tracking offset for recording tracks at the outer diameter
This byte shall be a signed value (- 128 to 127) denoting the tracking offset in nm to be added to the tracking error signal. A positive value indicates an offset toward the inner diameter of the disk.

Byte 53: Write tracking offset for recording tracks at the middle diameter
This byte shall be a signed value (- 128 to 127) denoting the tracking offset in nm to be added to the tracking error signal. A positive value indicates an offset toward the inner diameter of the disk.

Byte 54: Write tracking offset for recording tracks at the inside diameter
This byte shall be a signed value (- 128 to 127) denoting the tracking offset in nm to be added to the tracking error signal. A positive value indicates an offset toward the inner diameter of the disk.

Bytes 55 to 58: Minimum compatible firmware build Code
These four bytes shall contain the firmware revision number in ASCII representation of the minimum compatible firmware build that can be used with the disk. If all four bytes are (00h), then the disk is compatible with all firmware revisions.

© ISO/IEC 2008 – All rights reserved

Copyright International Organization for Standardization
Provided by IHS under license with ISO
No reproduction or networking permitted without license from IHS
Not for Resale

Byte 59: Special Disk Designator, for special controller modes
This byte shall be set by default to (00h).

Bytes 60 to 127: Reserved for special controller modes
These bytes shall be set by default to (00h).

Bytes 128 to 5 247: Parameter Pages
A Parameter Page shall be 32 bytes in length and shall specify a single Write Strategy parameter for up to 32 Zones.
For Zones that are not present in the media format the byte values shall be recorded with (00h).
The Page content shall be organized as follows:

Page Offset 0	Parameter byte value for Zone 0
Page Offset 1	Parameter byte value for Zone 1
↓	
Page Offset N	Parameter byte value for Zone N (N = maximum Zone Number)
Page Offset N+1 to 31	Reserved = (00h)

Bytes 128 to 159: Typical Write Power value
These bytes shall be recorded with a number *n* such that *n* = *Typical Write Power value in mW* × 100

Bytes 160 to 191: Write Power multiplier
A value of 100 shall specify that linear interpolation gives the correct Write Power.
A value of (100+*n*) shall specify that the Write Power must be increased by *n*% after linear interpolation.

Bytes 192 to 223: Multi-pulse to first pulse Write Power ratio (PMW / PFW)
These bytes shall be recorded with a number *n* such that *n* = (*PMW / PFW*) × 100.

Bytes 224 to 255: Last-pulse to first pulse Write Power ratio (PLW / PFW)
These bytes shall be recorded with a number *n* such that *n* = (*PLW / PFW*) × 100.

Bytes 256 to 287: Erase to first pulse Write Power ratio (PER / PFW)
These bytes shall be recorded with a number *n* such that *n* = (*PER / PFW*) × 100.

Bytes 256 to 287:
- **For Type RW media: Erase to first pulse Write Power ratio (PER / PFW)**
  These bytes shall be recorded with a number *n* such that *n* = (*PER / PFW*) × 100.
- **For Type WORM media: Bias Power during the recording of spaces to first pulse Write**
  These bytes shall be recorded with a number *n* such that n = (*PB / PFW*) × 100.

Bytes 288 to 319: Cooling pulse to first pulse Write Power ratio (PCL / PFW)
These bytes shall be recorded with a number *n* such that *n* = (*PER / PFW*) × 100.

Bytes 320 to 351: Bias pulse to first pulse Write Power ratio (PB / PFW)
These bytes shall be recorded with a number *n* such that *n* = (*PB / PFW*) × 100.

Bytes 352 to 383: End erase pulse to first pulse Write Power ratio (PEER / PFW)
These bytes shall be recorded with a number *n* such that *n* = (*PEER / PFW*) × 100.

Bytes 384 to 415: Middle first pulse to first pulse Write Power ratio (PMFW / PFW)
These bytes shall be recorded with a number *n* such that *n* = (*PMFW / PFW*) × 100.

Bytes 416 to 3 775 and 3 968 to 5 247: Write pulse timing strategy
The contents of the different time delay parameters specified by these bytes are given in Table L.2 of Annex L.
The value contained in each of these bytes shall represent a time delay δT expressed as a sum of an integer number *m* of Channel Clock period T and an integer number *n* of units of 1/40 of the Channel Clock period T:

$\delta T = m\mathrm{T} + n(\mathrm{T}/40)$.

The value of m and n shall be assigned to each byte using the following bit fields:
Bit 7–6 shall represent the value *m* (0 to 3).
Bit 5–0 shall represent the value *n* (0 to 39).
Bit 7 shall be the most significant bit of value *m*.
Bit 5 shall be the most significant bit of value *n*.

© ISO/IEC 2008 – All rights reserved
Copyright International Organization for Standardization
Provided by IHS under license with ISO
No reproduction or networking permitted without license from IHS
Not for Resale

Bytes 416 to 447
This Parameter Page shall specify the start multi-pulse delay TSMP.

Bytes 448 to 479
This Parameter Page shall specify the end multi-pulse delay TEMP.

Bytes 480 to 511
This Parameter Page shall specify the start extra 1 pulse delay TX1.

Bytes 512 to 543
This Parameter Page shall specify the end extra 2 pulse delay TX2.

Bytes 544 to 575
This Parameter Page shall specify the end extra 3 pulse delay TX3.

Bytes 576 to 607
This Parameter Page shall specify the end multi-pulse programmable delay of a 4T mark followed by a 2T space TEMPP (4M-2S).

Bytes 608 to 639
This Parameter Page shall specify the end multi-pulse programmable delay of a 4T mark followed by a 3T space TEMPP (4M-3S).

Bytes 640 to 671
This Parameter Page shall specify the end multi-pulse programmable delay of a 4T mark followed by a 4T space TEMPP (4M-4S).

Bytes 672 to 703
This Parameter Page shall specify the end multi-pulse programmable delay of a 4T mark followed by a 5T or longer space TEMPP (4M-5S).

Bytes 704 to 735
This Parameter Page shall specify the end multi-pulse programmable delay of a 5T or longer mark followed by a 2T space TEMPP (5M-2S).

Bytes 736 to 767
This Parameter Page shall specify the end multi-pulse programmable delay of a 5T or longer mark followed by a 3T space TEMPP (5M-3S).

Bytes 768 to 799
This Parameter Page shall specify the end multi-pulse programmable delay of a 5T or longer mark followed by a 4T space TEMPP (5M-4S).

Bytes 800 to 831
This Parameter Page shall specify the end multi-pulse programmable delay of a 5T or longer mark followed by a 5T or longer space TEMPP (5M-5S).

Bytes 832 to 863
This Parameter Page shall specify the end cooling pulse delay of a 2T mark followed by a 2T space TECP (2M-2S).

Bytes 864 to 895
This Parameter Page shall specify the end cooling pulse delay of a 2T mark followed by a 3T space TECP (2M-3S).

Bytes 896 to 927
This Parameter Page shall specify the end cooling pulse delay of a 2T mark followed by a 4T space TECP (2M-4S).

Bytes 928 to 959
This Parameter Page shall specify the end cooling pulse delay of a 2T mark followed by a 5T or longer space TECP (2M-5S).

Bytes 960 to 991
This Parameter Page shall specify the end cooling pulse delay of a 3T mark followed by a 2T space TECP (3M-2S).

© ISO/IEC 2008 – All rights reserved

Copyright International Organization for Standardization
Provided by IHS under license with ISO
No reproduction or networking permitted without license from IHS
Not for Resale

Bytes 992 to 1 023
This Parameter Page shall specify the end cooling pulse delay of a 3T mark followed by a 3T space TECP (3M-3S).

Bytes 1 024 to 1 055
This Parameter Page shall specify the end cooling pulse delay of a 3T mark followed by a 4T space TECP (3M-4S).

Bytes 1 056 to 1 087
This Parameter Page shall specify the end cooling pulse delay of a 3T mark followed by a 5T or longer space TECP (3M-5S).

Bytes 1 088 to 1 119
This Parameter Page shall specify the end cooling pulse delay of a 4T mark followed by a 2T space TECP (4M-2S).

Bytes 1 120 to 1 151
This Parameter Page shall specify the end cooling pulse delay of a 4T mark followed by a 3T space TECP (4M-3S).

Bytes 1 152 to 1 183
This Parameter Page shall specify the end cooling pulse delay of a 4T mark followed by a 4T space TECP (4M-4S).

Bytes 1 184 to 1 215
This Parameter Page shall specify the end cooling pulse delay of a 4T mark followed by a 5T or longer space TECP (4M-5S).

Bytes 1 216 to 1 247
This Parameter Page shall specify the end cooling pulse delay of a 5T or longer mark followed by a 2T space TECP (5M-2S).

Bytes 1 248 to 1 279
This Parameter Page shall specify the end cooling pulse delay of a 5T or longer mark followed by a 3T space TECP (5M-3S).

Bytes 1 280 to 1 311
This Parameter Page shall specify the end cooling pulse delay of a 5T or longer mark followed by a 4T space TECP (5M-4S).

Bytes 1 312 to 1 343
This Parameter Page shall specify the end cooling pulse delay of a 5T or longer mark followed by a 5T or longer space TECP (5M-5S).

Bytes 1 344 to 1 375
This Parameter Page shall specify the end last pulse delay of a 2T mark followed by a 2T space TELP (2M-2S).

Bytes 1 376 to 1 407
This Parameter Page shall specify the end last pulse delay of a 2T mark followed by a 3T space TELP (2M-3S).

Bytes 1 408 to 1 439
This Parameter Page shall specify the end last pulse delay of a 2T mark followed by a 4T space TELP (2M-4S).

Bytes 1 440 to 1 471
This Parameter Page shall specify the end last pulse delay of a 2T mark followed by a 5T or longer space TELP (2M-5S).

Bytes 1 472 to 1 503
This Parameter Page shall specify the end last pulse delay of a 3T mark followed by a 2T space TELP (3M-2S).

© ISO/IEC 2008 – All rights reserved
Copyright International Organization for Standardization
Provided by IHS under license with ISO
No reproduction or networking permitted without license from IHS
Not for Resale

Bytes 1 504 to 1 535
This Parameter Page shall specify the end last pulse delay of a 3T mark followed by a 3T space TELP (3M-3S).

Bytes 1 536 to 1 567
This Parameter Page shall specify the end last pulse delay of a 3T mark followed by a 4T space TELP (3M-4S).

Bytes 1 568 to 1 599
This Parameter Page shall specify the end last pulse delay of a 3T mark followed by a 5T or longer space TELP (3M-5S).

Bytes 1 600 to 1 631
This Parameter Page shall specify the end last pulse delay of a 4T mark followed by a 2T space TELP (4M-2S).

Bytes 1 632 to 1 663
This Parameter Page shall specify the end last pulse delay of a 4T mark followed by a 3T space TELP (4M-3S).

Bytes 1 664 to 1 695
This Parameter Page shall specify the end last pulse delay of a 4T mark followed by a 4T space TELP (4M-4S).

Bytes 1 696 to 1 727
This Parameter Page shall specify the end last pulse delay of a 4T mark followed by a 5T or longer space TELP (4M-5S).

Bytes 1 728 to 1 759
This Parameter Page shall specify the end last pulse delay of a 5T or longer mark followed by a 2T space TELP (5M-2S).

Bytes 1 760 to 1 791
This Parameter Page shall specify the end last pulse delay of a 5T or longer mark followed by a 3T space TELP (5M-3S).

Bytes 1 792 to 1 823
This Parameter Page shall specify the end last pulse delay of a 5T or longer mark followed by a 4T space TELP (5M-4S).

Bytes 1 824 to 1 855
This Parameter Page shall specify the end last pulse delay of a 5T or longer mark followed by a 5T or longer space TELP (5M-5S).

Bytes 1 856 to 1 887
This Parameter Page shall specify the start last pulse delay of a 2T mark followed by a 2T space TSLP (2M-2S).

Bytes 1 888 to 1 919
This Parameter Page shall specify the start last pulse delay of a 2T mark followed by a 3T space TSLP (2M-3S).

Bytes 1 920 to 1 951
This Parameter Page shall specify the start last pulse delay of a 2T mark followed by a 4T space TSLP (2M-4S).

Bytes 1 952 to 1 983
This Parameter Page shall specify the start last pulse delay of a 2T mark followed by a 5T or longer space TSLP (2M-5S).

Bytes 1 984 to 2 015
This Parameter Page shall specify the start last pulse delay of a 3T mark followed by a 2T space TSLP (3M-2S).

© ISO/IEC 2008 – All rights reserved

Copyright International Organization for Standardization
Provided by IHS under license with ISO
No reproduction or networking permitted without license from IHS
Not for Resale

Bytes 2 016 to 2 047
This Parameter Page shall specify the start last pulse delay of a 3T mark followed by a 3T space TSLP (3M-3S).

Bytes 2 048 to 2 079
This Parameter Page shall specify the start last pulse delay of a 3T mark followed by a 4T space TSLP (3M-4S).

Bytes 2 080 to 2 111
This Parameter Page shall specify the start last pulse delay of a 3T mark followed by a 5T or longer space TSLP (3M-5S).

Bytes 2 112 to 2 143
This Parameter Page shall specify the start last pulse delay of a 4T mark followed by a 2T space TSLP (4M-2S).

Bytes 2 144 to 2 175
This Parameter Page shall specify the start last pulse delay of a 4T mark followed by a 3T space TSLP (4M-3S).

Bytes 2 176 to 2 207
This Parameter Page shall specify the start last pulse delay of a 4T mark followed by a 4T space TSLP (4M-4S).

Bytes 2 208 to 2 239
This Parameter Page shall specify the start last pulse delay of a 4T mark followed by a 5T or longer space TSLP (4M-5S).

Bytes 2 240 to 2 271
This Parameter Page shall specify the start last pulse delay of a 5T or longer mark followed by a 2T space TSLP (5M-2S).

Bytes 2 272 to 2 303
This Parameter Page shall specify the start last pulse delay of a 5T or longer mark followed by a 3T space TSLP (5M-3S).

Bytes 2 304 to 2 335
This Parameter Page shall specify the start last pulse delay of a 5T or longer mark followed by a 4T space TSLP (5M-4S).

Bytes 2 336 to 2 367
This Parameter Page shall specify the start last pulse delay of a 5T or longer mark followed by a 5T or longer space TSLP (5M-5S).

Bytes 2 368 to 2 399
This Parameter Page shall specify the end first pulse delay of a 2T mark following a 2T space TEFP (2S-2M).

Bytes 2 400 to 2 431
This Parameter Page shall specify the end first pulse delay of a 3T mark following a 2T space TEFP (2S-3M).

Bytes 2 432 to 2 463
This Parameter Page shall specify the end first pulse delay of a 4T mark following a 2T space TEFP (2S-4M).

Bytes 2 464 to 2 495
This Parameter Page shall specify the end first pulse delay of a 5T or longer mark following a 2T space TEFP (2S-5M).

Bytes 2 496 to 2 527
This Parameter Page shall specify the end first pulse delay of a 2T mark following a 3T space TEFP (3S-2M).

© ISO/IEC 2008 – All rights reserved
Copyright International Organization for Standardization
Provided by IHS under license with ISO
No reproduction or networking permitted without license from IHS
Not for Resale

Bytes 2 528 to 2 559
This Parameter Page shall specify the end first pulse delay of a 3T mark following a 3T space TEFP (3S-3M).

Bytes 2 560 to 2 591
This Parameter Page shall specify the end first pulse delay of a 4T mark following a 3T space TEFP (3S-4M).

Bytes 2 592 to 2 623
This Parameter Page shall specify the end first pulse delay of a 5T or longer mark following a 3T space TEFP (3S-5M).

Bytes 2 624 to 2 655
This Parameter Page shall specify the end first pulse delay of a 2T mark following a 4T space TEFP (4S-2M).

Bytes 2 656 to 2 687
This Parameter Page shall specify the end first pulse delay of a 3T mark following a 4T space TEFP (4S-3M).

Bytes 2 688 to 2 719
This Parameter Page shall specify the end first pulse delay of a 4T mark following a 4T space TEFP (4S-4M).

Bytes 2 720 to 2 751
This Parameter Page shall specify the end first pulse delay of a 5T or longer mark following a 4T space TEFP (4S-5M).

Bytes 2 752 to 2 783
This Parameter Page shall specify the end first pulse delay of a 2T mark following a 5T or longer space TEFP (5S-2M).

Bytes 2 784 to 2 815
This Parameter Page shall specify the end first pulse delay of a 3T mark following a 5T or longer space TEFP (5S-3M).

Bytes 2 816 to 2 847
This Parameter Page shall specify the end first pulse delay of a 4T mark following a 5T or longer space TEFP (5S-4M).

Bytes 2 848 to 2 879
This Parameter Page shall specify the end first pulse delay of a 5T or longer mark following a 5T or longer space TEFP (5S-5M).

Bytes 2 880 to 2 911
This Parameter Page shall specify the start first pulse delay of a 2T mark following a 2T space TSFP (2S-2M).

Bytes 2 912 to 2 943
This Parameter Page shall specify the start first pulse delay of a 3T mark following a 2T space TSFP (2S-3M).

Bytes 2 944 to 2 975
This Parameter Page shall specify the start first pulse delay of a 4T mark following a 2T space TSFP (2S-4M).

Bytes 2 976 to 3 007
This Parameter Page shall specify the start first pulse delay of a 5T or longer mark following a 2T space TSFP (2S-5M).

Bytes 3 008 to 3 039
This Parameter Page shall specify the start first pulse delay of a 2T mark following a 3T space TSFP (3S-2M).

© ISO/IEC 2008 – All rights reserved

Copyright International Organization for Standardization
Provided by IHS under license with ISO
No reproduction or networking permitted without license from IHS
Not for Resale

Bytes 3 040 to 3 071
This Parameter Page shall specify the start first pulse delay of a 3T mark following a 3T space TSFP (3S-3M).

Bytes 3 072 to 3 103
This Parameter Page shall specify the start first pulse delay of a 4T mark following a 3T space TSFP (3S-4M).

Bytes 3 104 to 3 135
This Parameter Page shall specify the start first pulse delay of a 5T or longer mark following a 3T space TSFP (3S-5M).

Bytes 3 136 to 3 167
This Parameter Page shall specify the start first pulse delay of a 2T mark following a 4T space TSFP (4S-2M).

Bytes 3 168 to 3 199
This Parameter Page shall specify the start first pulse delay of a 3T mark following a 4T space TSFP (4S-3M).

Bytes 3 200 to 3 231
This Parameter Page shall specify the start first pulse delay of a 4T mark following a 4T space TSFP (4S-4M).

Bytes 3 232 to 3 263
This Parameter Page shall specify the start first pulse delay of a 5T or longer mark following a 4T space TSFP (4S-5M).

Bytes 3 264 to 3 295
This Parameter Page shall specify the start first pulse delay of a 2T mark following a 5T or longer space TSFP (5S-2M).

Bytes 3 296 to 3 327
This Parameter Page shall specify the start first pulse delay of a 3T mark following a 5T or longer space TSFP (5S-3M).

Bytes 3 328 to 3 359
This Parameter Page shall specify the start first pulse delay of a 4T mark following a 5T or longer space TSFP (5S-4M).

Bytes 3 360 to 3 391
This Parameter Page shall specify the start first pulse delay of a 5T or longer mark following a 5T or longer space TSFP (5S-5M).

Bytes 3 392 to 3 423
This Parameter Page shall specify the erase multi-pulse 3 delay TER3.

Bytes 3 424 to 3 455
This Parameter Page shall specify the erase multi-pulse 1 delay TER1.

Bytes 3 456 to 3 487
This Parameter Page shall specify the erase multi-pulse 4 delay TER4.

Bytes 3 488 to 3 519
This Parameter Page shall specify the erase multi-pulse 2 delay TER2.

Bytes 3 520 to 3 551
This Parameter Page shall specify the end multi-pulse delay for 5T marks TEMP5M.

Bytes 3 552 to 3 583
This Parameter Page shall specify the end multi-pulse delay for 6T marks TEMP6M.

Bytes 3 584 to 3 615
This Parameter Page shall specify the end multi-pulse delay for 7T marks TEMP7M.

Bytes 3 616 to 3 647
This Parameter Page shall specify the end multi-pulse delay for 8T marks TEMP8M.

--`,,```,,,,````-`-`,,`,,`,`,,`---

© ISO/IEC 2008 – All rights reserved
Copyright International Organization for Standardization
Provided by IHS under license with ISO
No reproduction or networking permitted without license from IHS
Not for Resale

Bytes 3 648 to 3 679:
This Parameter Page shall specify the end multi-pulse delay for 9T marks TEMP9M.

Bytes 3 680 to 3 711
This Parameter Page shall specify the end multi-pulse delay for 10T marks TEMP10M.

Bytes 3 712 to 3 743
This Parameter Page shall specify the end multi-pulse delay for 11T marks TEMP11M.

Bytes 3 744 to 3 775
This Parameter Page shall specify the end multi-pulse delay for 12T or longer marks TEMPLM.

Bytes 3 776 to 3 967 specify the enable bit fields for Multi-T mode inner pulses.
The contents of the different enable bit fields for various mark lengths specified by these bytes are given in Table I.3.

A '0' bit indicates inner pulse is disabled (missing) and '1' bit indicates inner pulse is enabled (present). The most significant bit of MPxM fields corresponds to the first inner pulse and the least significant bit to the last inner pulse.

Table I.3 — Multi-T mode enable bit fields for various mark lengths

Parameter	Bit 7	Bit 6	Bit 5	Bit 4	Bit 3	Bit 2	Bit 1	Bit 0
MTA	MP7M				MPLM [2:0]			MTEN
MTB	MPLM[10:3]							
MTC	MP6M			MP8M				
MTD	MP5M		MP9M					
MTE	MP4M	MP10M						
MTF	MP11M							

NOTES
MTEN Multi-T mode enable bit ('0' disables Multi-T mode, '1' enables Multi-T mode)
MP4M Multi-Pulse for 4T marks
MP5M Multi-Pulses for 5T marks
MP6M Multi-Pulses for 6T marks
MP7M Multi-Pulses for 7T marks
MP8M Multi-Pulses for 8T marks
MP9M Multi-Pulses for 9T marks
MP10M Multi-Pulses for 10T marks
MP11M Multi-Pulses for 11T marks
MPLM Multi-Pulses for 12T or longer marks

Bytes 3 776 to 3 807
This Parameter Page shall specify the Multi-T mode enable bit field MTA.

Bytes 3 808 to 3 839
This Parameter Page shall specify the Multi-T mode enable bit field MTB.

Bytes 3 840 to 3 871
This Parameter Page shall specify the Multi-T mode enable bit field MTC.

Bytes 3 872 to 3 903
This Parameter Page shall specify the Multi-T mode enable bit field MTD.

Bytes 3 904 to 3 935
This Parameter Page shall specify the Multi-T mode enable bit field MTE.

Bytes 3 936 to 3 967
This Parameter Page shall specify the Multi-T mode enable bit field MTF.

Bytes 3 968 to 3 999
This Parameter Page shall specify the start multi-pulse delay for 5T marks TSMP5M.

© ISO/IEC 2008 – All rights reserved

Copyright International Organization for Standardization
Provided by IHS under license with ISO
No reproduction or networking permitted without license from IHS
Not for Resale

Bytes 4 000 to 4 031
This Parameter Page shall specify the start multi-pulse delay for 6T marks TSMP6M.

Bytes 4 032 to 4 063
This Parameter Page shall specify the start multi-pulse delay for 7T marks TSMP7M.

Bytes 4 064 to 4 095
This Parameter Page shall specify the start multi-pulse delay for 8T marks TSMP8M.

Bytes 4 096 to 4 127
This Parameter Page shall specify the start multi-pulse delay for 9T marks TSMP9M.

Bytes 4 128 to 4 159
This Parameter Page shall specify the start multi-pulse delay for 10T marks TSMP10M.

Bytes 4 160 to 4 191
This Parameter Page shall specify the start multi-pulse delay for 11T marks TSMP11M.

Bytes 4 192 to 4 223
This Parameter Page shall specify the start multi-pulse delay for 12T or longer marks TSMPLM.

Bytes 4 224 to 4 255
This Parameter Page shall specify the end erase pulse delay of a 2T space followed by a 2T mark TEER (2S-2M).

Bytes 4 256 to 4 287
This Parameter Page shall specify the end erase pulse delay of a 2T space followed by a 3T mark TEER (2S-3M).

Bytes 4 288 to 4 319
This Parameter Page shall specify the end erase pulse delay of a 2T space followed by a 4T mark TEER (2S-4M).

Bytes 4 320 to 4 351
This Parameter Page shall specify the end erase pulse delay of a 2T space followed by a 5T or longer mark TEER (2S-5M).

Bytes 4 352 to 4 383
This Parameter Page shall specify the end erase pulse delay of a 3T space followed by a 2T mark TEER (3S-2M).

Bytes 4 384 to 4 415
This Parameter Page shall specify the end erase pulse delay of a 3T space followed by a 3T mark TEER (3S-3M).

Bytes 4 416 to 4 447
This Parameter Page shall specify the end erase pulse delay of a 3T space followed by a 4T mark TEER (3S-4M).

Bytes 4 448 to 4 479
This Parameter Page shall specify the end erase pulse delay of a 3T space followed by a 5T or longer mark TEER (3S-5M).

Bytes 4 480 to 4 511
This Parameter Page shall specify the end erase pulse delay of a 4T space followed by a 2T mark TEER (4S-2M).

Bytes 4 512 to 4 543
This Parameter Page shall specify the end erase pulse delay of a 4T space followed by a 3T mark TEER (4S-3M).

Bytes 4 544 to 4 575
This Parameter Page shall specify the end erase pulse delay of a 4T space followed by a 4T mark TEER (4S-4M).

© ISO/IEC 2008 – All rights reserved
Copyright International Organization for Standardization
Provided by IHS under license with ISO
No reproduction or networking permitted without license from IHS
Not for Resale

Bytes 4 576 to 4 607
This Parameter Page shall specify the end erase pulse delay of a 4T space followed by a 5T or longer mark TEER (4S-5M).

Bytes 4 608 to 4 639
This Parameter Page shall specify the end erase pulse delay of a 5T or longer space followed by a 2T mark TEER (5S-2M).

Bytes 4 640 to 4 671
This Parameter Page shall specify the end erase pulse delay of a 5T or longer space followed by a 3T mark TEER (5S-3M).

Bytes 4 672 to 4 703
This Parameter Page shall specify the end erase pulse delay of a 5T or longer space followed by a 4T mark TEER (5S-4M).

Bytes 4 704 to 4 735
This Parameter Page shall specify the end erase pulse delay of a 5T or longer space followed by a 5T or longer mark TEER (5S-5M).

Bytes 4 736 to 4 767
This Parameter Page shall specify the start middle first pulse delay of a 2T mark following a 2T space TMFP (2S-2M).

Bytes 4 768 to 4 799
This Parameter Page shall specify the start middle first pulse delay of a 3T mark following a 2T space TMFP (2S-3M).

Bytes 4 800 to 4 831
This Parameter Page shall specify the start middle first pulse delay of a 4T mark following a 2T space TMFP (2S-4M).

Bytes 4 832 to 4 863
This Parameter Page shall specify the start middle first pulse delay of a 5T or longer mark following a 2T space TMFP (2S-5M).

Bytes 4 864 to 4 895
This Parameter Page shall specify the start middle first pulse delay of a 2T mark following a 3T space TMFP (3S-2M).

Bytes 4 896 to 4 927
This Parameter Page shall specify the start middle first pulse delay of a 3T mark following a 3T space TMFP (3S-3M).

Bytes 4 928 to 4 959
This Parameter Page shall specify the start middle first pulse delay of a 4T mark following a 3T space TMFP (3S-4M).

Bytes 4 960 to 4 991
This Parameter Page shall specify the start middle first pulse delay of a 5T or longer mark following a 3T space TMFP (3S-5M).

Bytes 4 992 to 5 023
This Parameter Page shall specify the start middle first pulse delay of a 2T mark following a 4T space TMFP (4S-2M).

Bytes 5 024 to 5 055
This Parameter Page shall specify the start middle first pulse delay of a 3T mark following a 4T space TMFP (4S-3M).

Bytes 5 056 to 5 087
This Parameter Page shall specify the start middle first pulse delay of a 4T mark following a 4T space TMFP (4S-4M).

© ISO/IEC 2008 – All rights reserved

Copyright International Organization for Standardization
Provided by IHS under license with ISO
No reproduction or networking permitted without license from IHS
Not for Resale

Bytes 5 088 to 5 119
This Parameter Page shall specify the start middle first pulse delay of a 5T or longer mark following a 4T space TMFP (4S-5M).

Bytes 5 120 to 5 151
This Parameter Page shall specify the start middle first pulse delay of a 2T mark following a 5T or longer space TMFP (5S-2M).

Bytes 5 152 to 5 183
This Parameter Page shall specify the start middle first pulse delay of a 3T mark following a 5T or longer space TMFP (5S-3M).

Bytes 5 184 to 5 215
This Parameter Page shall specify the start middle first pulse delay of a 4T mark following a 5T or longer space TMFP (5S-4M).

Bytes 5 216 to 5 247
This Parameter Page shall specify the start middle first pulse delay of a 5T or longer mark following a 5T or longer space TMFP (5S-5M).

Bytes 5 248 to 8 189
These bytes are Unspecified and shall be ignored in interchange. Media manufacturers may use these bytes at their discretion to record additional disk information.

Bytes 8 190 and 8 191
These bytes shall be recorded with the SDI Identifier Complement. Both bytes shall be recorded with (2Dh) to indicate that this is a SDI Sector.

© ISO/IEC 2008 – All rights reserved
Copyright International Organization for Standardization
Provided by IHS under license with ISO
No reproduction or networking permitted without license from IHS
Not for Resale

Annex J
(normative)

CRC Calculation for SDI, DDS, PDL, and SDL Sectors

The CRC calculation generates a 16-bit word computed over the first 8 190 bytes of the Sector. The CRC calculation uses a 256-word look up table (See Table J.1) and the following iterative algorithm:

CRC_0 = FFFFh

For k = 0 to 8189

CRC_{k+1} = Table[(CRC_k >> 8) $\oplus$ $Byte_k$] $\oplus$ (CRC_k << 8)

where $Byte_0$ is the first byte of the Sector,

Table[n] means the look up table value at index n,

(A >> B) means logical right shift of word A by B bits,

(A << B) means logical left shift of word A by B bits,

$\oplus$ means Exclusive-OR logical operation,

and $CRC_{8\ 190}$ is the calculated 16-bit CRC word.

The MSB of $CRC_{8\ 190}$ shall be recorded in $Byte_{8\ 190}$ and the LSB of $CRC_{8\ 190}$ shall be recorded in $Byte_{8\ 191}$ of the Sector.

© ISO/IEC 2008 – All rights reserved

Copyright International Organization for Standardization
Provided by IHS under license with ISO
No reproduction or networking permitted without license from IHS
Not for Resale

Table J.1 — CRC calculation look up table

Index (Hex)	Value (Hex)							
00–07	0000	1021	2042	3063	4084	50A5	60C6	70E7
08–0F	8108	9129	A14A	B16B	C18C	D1AD	E1CE	F1EF
10–17	1231	0210	3273	2252	52B5	4294	72F7	62D6
18–1F	9339	8318	B37B	A35A	D3BD	C39C	F3FF	E3DE
20–27	2462	3443	0420	1401	64E6	74C7	44A4	5485
28–2F	A56A	B54B	8528	9509	E5EE	F5CF	C5AC	D58D
30–37	3653	2672	1611	0630	76D7	66F6	5695	46B4
38–3F	B75B	A77A	9719	8738	F7DF	E7FE	D79D	C7BC
40–47	48C4	58E5	6886	78A7	0840	1861	2802	3823
48–4F	C9CC	D9ED	E98E	F9AF	8948	9969	A90A	B92B
50–57	5AF5	4AD4	7AB7	6A96	1A71	0A50	3A33	2A12
58–5F	DBFD	CBDC	FBBF	EB9E	9B79	8B58	BB3B	AB1A
60–67	6CA6	7C87	4CE4	5CC5	2C22	3C03	0C60	1C41
68–6F	EDAE	FD8F	CDEC	DDCD	AD2A	BD0B	8D68	9D49
70–77	7E97	6EB6	5ED5	4EF4	3E13	2E32	1E51	0E70
78–7F	FF9F	EFBE	DFDD	CFFC	BF1B	AF3A	9F59	8F78
80–87	9188	81A9	B1CA	A1EB	D10C	C12D	F14E	E16F
88–8F	1080	00A1	30C2	20E3	5004	4025	7046	6067
90–97	83B9	9398	A3FB	B3DA	C33D	D31C	E37F	F35E
98–9F	02B1	1290	22F3	32D2	4235	5214	6277	7256
A0–A7	B5EA	A5CB	95A8	8589	F56E	E54F	D52C	C50D
A8–AF	34E2	24C3	14A0	0481	7466	6447	5424	4405
B0–B7	A7DB	B7FA	8799	97B8	E75F	F77E	C71D	D73C
B8–BF	26D3	36F2	0691	16B0	6657	7676	4615	5634
C0–C7	D94C	C96D	F90E	E92F	99C8	89E9	B98A	A9AB
C8–CF	5844	4865	7806	6827	18C0	08E1	3882	28A3
D0–D7	CB7D	DB5C	EB3F	FB1E	8BF9	9BD8	ABBB	BB9A
D8–DF	4A75	5A54	6A37	7A16	0AF1	1AD0	2AB3	3A92
E0–E7	FD2E	ED0F	DD6C	CD4D	BDAA	AD8B	9DE8	8DC9
E8–EF	7C26	6C07	5C64	4C45	3CA2	2C83	1CE0	0CC1
F0–F7	EF1F	FF3E	CF5D	DF7C	AF9B	BFBA	8FD9	9FF8
F8–FF	6E17	7E36	4E55	5E74	2E93	3EB2	0ED1	1EF0

© ISO/IEC 2008 – All rights reserved
Copyright International Organization for Standardization
Provided by IHS under license with ISO
No reproduction or networking permitted without license from IHS
Not for Resale

Annex K
(normative)

Data field scrambler implementation

K.1 Data field scrambler purpose

The purpose of Data field scrambling is to randomize user data to generate various mark and space lengths in the encoded data. The data scrambler tends to reduce the d.c. content of the encoded data waveform. This is of primary importance for Sectors with block of fixed data bytes. In these cases, without scrambling, the encoded data could consist of the same repeated patterns, which can generate a large d.c. content.

K.2 Data field scrambler order of processing

The Data field shall be as detailed in Annex G.

The entire Data field except for Resync and Reference fields shall be scrambled. The order of processing for encoding shall be

1 Interleave user data and Control bytes

2 Generate CRC and ECC bytes

3 Scramble bytes of the Data field

4 Insert Resync and Reference fields (not scrambled)

The order of processing for decoding shall be the reverse of the encoding process

1 Remove Resync and Reference fields

2 Unscramble bytes of Data field

3 Perform ECC and check CRC

4 De-interleave user data and Control bytes

K.3 Data field scrambler circuit and preset values

The scrambling byte generation circuit shall be as shown in Figure K.1. The circuit consists of a feedback bit shift register in which bits r_7 (msb) to r_0 (lsb) are used as a scrambling byte at each 8-bit shift.

The initial preset number, shown in Table K.1 is equivalent to least significant 4 bits of the PBA value, b_3 to b_0, in which b_3 is the msb and b_0 is the lsb. At the beginning of each Data field, the initial value of r_{14} to r_0 shall be preset corresponding to the PBA of the Sector as shown in Table K.1 (the msb of the pre-set value shall be discarded).

The initial value shall be changed every Sector, and after 16 Sectors, the sequence shall be repeated.

© ISO/IEC 2008 – All rights reserved

Copyright International Organization for Standardization
Provided by IHS under license with ISO
No reproduction or networking permitted without license from IHS
Not for Resale

The lower 8 bits of the initial values of r_7 to r_0 shall be taken out as scrambling byte S_1. After that, the 8-bit shift shall be repeated for each scrambled byte of the Data field. As a result, scrambling bytes S_2 to S_n shall be taken from the shift register at each 8-bit shift.

Table K.1 — Initial value of shift register

Initial preset number	Initial register value
(0)	(0001)
(1)	(5500)
(2)	(0002)
(3)	(2A00)
(4)	(0004)
(5)	(5400)
(6)	(0008)
(7)	(2800)
(8)	(0010)
(9)	(5000)
(A)	(0020)
(B)	(2001)
(C)	(0040)
(D)	(4002)
(E)	(0080)
(F)	(0005)

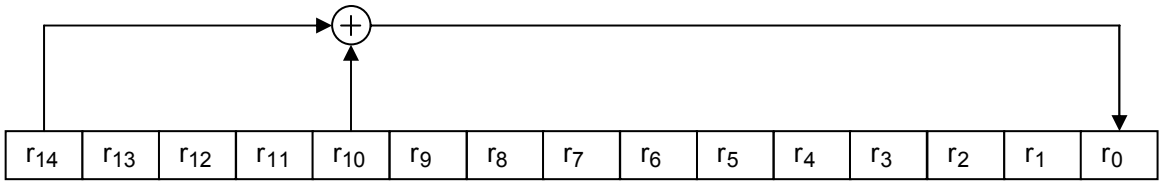

Figure K.1 — Feedback shift register for generating the scrambling byte

Scrambling for data byte D_k in Figure K.1 is defined as follows:

$D'_k = D_k \oplus S_k \qquad (k = 1 \text{ to } n)$

where

D'_k is the scrambled data byte

D_k is an unscrambled data byte

S_k is the scrambling byte from the feedback shift register

n is the number of data bytes to be scrambled in the Data field

and $\oplus$ means Exclusive-OR logical operation.

© ISO/IEC 2008 – All rights reserved
Copyright International Organization for Standardization
Provided by IHS under license with ISO
No reproduction or networking permitted without license from IHS
Not for Resale

Annex L
(normative)

Definition of the write pulse shape

The waveforms of the NRZ signal and the shape of the light pulse for both Type RW and Type WORM media shall be as shown in Figure L.1 (with corresponding parameters as defined in Table L.2).

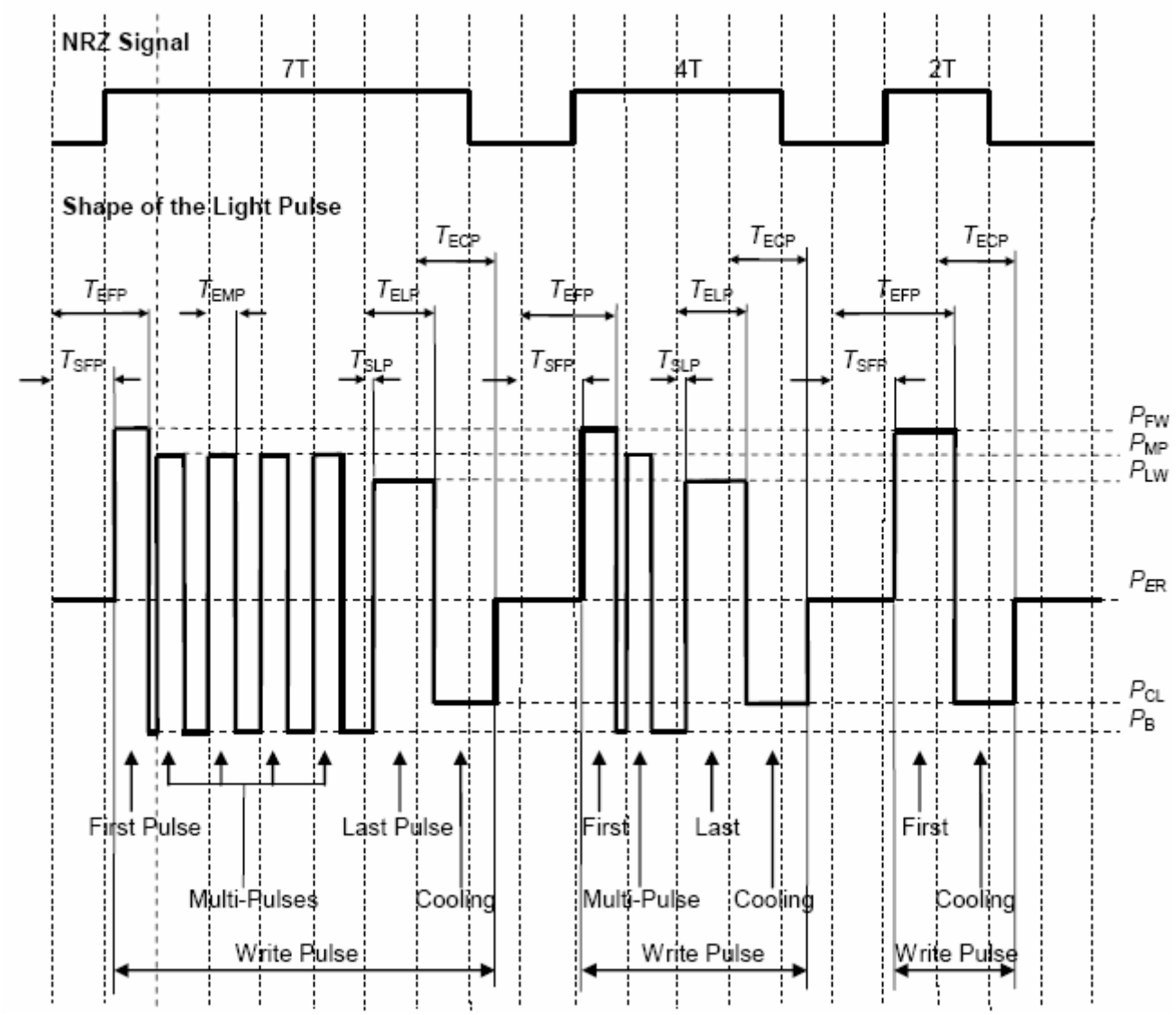

Figure L.1 — Write pulse shape definitions

The laser power levels shown are for reference and do not imply a specific ordering of pulse power. For example, P_{LW} may be higher than P_{FW}, P_{MP} may be higher than P_{FW}, P_{CL} may be lower than P_B, etc.

For Type WORM media, the erase power level P_{ER} may be set to a lower power (i.e. same as P_B).

The rise and fall times specified in 24.3.1 shall be measured as the time required to transition from the 10 % to 90 % or 90 % to 10 % points between any of the sequential optical power levels shown in Figure L.1.

© ISO/IEC 2008 – All rights reserved

Copyright International Organization for Standardization
Provided by IHS under license with ISO
No reproduction or networking permitted without license from IHS
Not for Resale

Table L.2 — Contents of the time delay parameters used in the write pulse strategy

Parameter	Content
T_{SFP}	Time delay of Start First Pulse: This time defines the start location of the first write pulse of a mark. It starts 1T before the space-mark transition of the NRZ signal. It is depending on the space-mark lengths. The power level selected at the end of this time is P_{FW}.
T_{EFP}	Time delay of End First Pulse: This time defines the end location of the first write pulse of a mark. It starts 1T before the space-mark transition of the NRZ signal. It is depending on the space-mark lengths. The power level selected at the end of this time is P_{CL} for 2T marks and P_B for marks longer than 2T.
T_{X1}	Time delay of Extra One: This time defines the start location of the second pulse of a write sequence (for mark at least 4T long). It starts 1T after the space-mark transition of the NRZ signal. The power level selected at the end of this time is P_{MP}.
T_{X3}	Time delay of Extra Three: This time defines the end location of the second pulse of a write sequence (for mark at least 4T long). It starts 1T after the space-mark transition of the NRZ signal. The power level selected at the end of this time is P_B.
T_{SMP}	Time delay of Start Multi-Pulse: This time defines the start location of the third or more inner write pulse of a mark (for mark at least 5T long). It starts at every middle T of a long mark (at 2T, 3T, 4T, . . . after the space-mark transition). The power level selected at the end of this time is P_{MP}.
T_{X2}	Time delay of Extra Two: This time defines the end location of the third write pulse of a mark (for mark at least 5T long). It starts 2T after the space-mark transition of the NRZ signal. The power level selected at the end of this time is P_B.
T_{EMP}	Time delay of End Multi-Pulse. This time defines the end location of the third or more inner write pulse started by T_{SMP} (for mark at least 6T long). It starts at every middle T of a long mark (at 3T, 4T, 5T, . . . after the space-mark transition). The power level selected at the end of this time is P_B.
T_{EMPP}	Time delay of End Multi-Pulse Programmable. This time defines the end location of the last inner write pulse started by T_{SMP} (for mark at least 4T long). It starts 3T before the mark-space transition of the NRZ signal. It is depending on the mark-space lengths. The power level selected at the end of this time is P_B.
T_{MFP}	Time delay of Start Middle First Pulse: This time defines the start location of the first inner pulse of a mark. It starts 1T before the space-mark transition. It is depending on the space-mark lengths. The power level selected at the end of this time is P_{MFW}.
T_{SLP}	Time delay of Start Last Pulse. This time defines the start location of the last write pulse of a mark (for mark at least 3T long). It starts 2T before the mark-space transition of the NRZ signal. The power level selected at the end of this time is P_{LW}.
T_{ELP}	Time delay of End Last Pulse: This time defines the end location of the last write pulse of a mark (for mark at least 3T long). It starts 2T before the mark-space transition of the NRZ signal. It is depending on the mark-space lengths. The power level selected at the end of this time is the final cooling power following a mark, P_{CL}.
T_{ECP}	Time delay of End Cooling Pulse. This time defines the end location of the final cooling pulse, and starts the erase power of the space region. It starts 1T before the mark-space transition. It is depending on the mark-space lengths. The power level selected at the end of this time is P_{ER}.
T_{ER2}	Time delay of Start Erase Multi-Pulse Two: This time defines the start location of the first erase multi-pulse of a space. It starts at the mark-space transition. The power level selected at the end of this time is P_{ER}.

© ISO/IEC 2008 – All rights reserved
Copyright International Organization for Standardization
Provided by IHS under license with ISO
No reproduction or networking permitted without license from IHS
Not for Resale

T_{ER1}	Time delay of End Erase Multi-Pulse One: This time defines the end location of the first erase multi-pulse of a space. It starts at the mark-space transition. The power level selected at the end of this time is P_{EER}.
T_{ER4}	Time delay of Start Erase Multi-Pulse Four: This time defines the start location of the second (and subsequent) erase multi-pulses of a space. It starts 1T after the mark-space transition. The power level selected at the end of this time is P_{ER}.
T_{ER3}	Time delay of End Erase Multi-Pulse Three: This time defines the end location of the second (and subsequent) erase multi-pulses of a space. It starts 1T after the mark-space transition. The power level selected at the end of this time is P_{EER}.
T_{EER}	Time delay of End Erase Multi-Pulse: This time defines the end location of the final erase multi-pulse of a space. It starts 1T before the space-mark transition. It is depending on the space-mark lengths. The power level selected at the end of this time is P_{EER}.
T_{SMP} *	Time delay of Start Multi-Pulse for 4T Mark: This time defines the start location of each of the enabled inner pulses of a 4T mark. It starts at each enabled inner pulse boundary. The power level selected at the end of this time is P_{MP}.
T_{SMP5M} *	Time delay of Start Multi-Pulse for 5T Mark: This time defines the start location of each of the enabled inner pulses of a 5T mark. It starts at each enabled inner pulse boundary. The power level selected at the end of this time is P_{MP}.
T_{SMP6M} *	Time delay of Start Multi-Pulse for 6T Mark: This time defines the start location of each of the enabled inner pulses of a 6T mark. It starts at each enabled inner pulse boundary. The power level selected at the end of this time is P_{MP}.
T_{SMP7M} *	Time delay of Start Multi-Pulse for 7T Mark: This time defines the start location of each of the enabled inner pulses of a 7T mark. It starts at each enabled inner pulse boundary. The power level selected at the end of this time is P_{MP}.
T_{SMP8M} *	Time delay of Start Multi-Pulse for 8T Mark: This time defines the start location of each of the enabled inner pulses of a 8T mark. It starts at each enabled inner pulse boundary. The power level selected at the end of this time is P_{MP}.
T_{SMP9M} *	Time delay of Start Multi-Pulse for 9T Mark: This time defines the start location of each of the enabled inner pulses of a 9T mark. It starts at each enabled inner pulse boundary. The power level selected at the end of this time is P_{MP}.
T_{SMP10M} *	Time delay of Start Multi-Pulse for 10T Mark: This time defines the start location of each of the enabled inner pulses of a 10T mark. It starts at each enabled inner pulse boundary. The power level selected at the end of this time is P_{MP}.
T_{SMP11M} *	Time delay of Start Multi-Pulse for 11T Mark: This time defines the start location of each of the enabled inner pulses of a 11T mark. It starts at each enabled inner pulse boundary. The power level selected at the end of this time is P_{MP}.
T_{SMPLM} *	Time delay of Start Multi-Pulse for Long Mark: This time defines the start location of each of the enabled inner pulses of a 12T or longer mark. It starts at each enabled inner pulse boundary. The power level selected at the end of this time is P_{MP}.
T_{EMP} *	Time delay of End Multi-Pulse for 4T Mark: This time defines the end location of each of the enabled inner pulses of a 4T mark. It starts at each enabled inner pulse boundary. The power level selected at the end of this time is P_B.

© ISO/IEC 2008 – All rights reserved

Copyright International Organization for Standardization
Provided by IHS under license with ISO
No reproduction or networking permitted without license from IHS
Not for Resale

*T*EMP5M *	Time delay of End Multi-Pulse for 5T Mark: This time defines the end location of each of the enabled inner pulses of a 5T mark. It starts at each enabled inner pulse boundary. The power level selected at the end of this time is *P*B.
*T*EMP6M *	Time delay of End Multi-Pulse for 6T Mark: This time defines the end location of each of the enabled inner pulses of a 6T mark. It starts at each enabled inner pulse boundary. The power level selected at the end of this time is *P*B.
*T*EMP7M *	Time delay of End Multi-Pulse for 7T Mark: This time defines the end location of each of the enabled inner pulses of a 7T mark. It starts at each enabled inner pulse boundary. The power level selected at the end of this time is *P*B.
*T*EMP8M *	Time delay of End Multi-Pulse for 8T Mark: This time defines the end location of each of the enabled inner pulses of a 8T mark. It starts at each enabled inner pulse boundary. The power level selected at the end of this time is *P*B.
*T*EMP9M *	Time delay of End Multi-Pulse for 9T Mark: This time defines the end location of each of the enabled inner pulses of a 9T mark. It starts at each enabled inner pulse boundary. The power level selected at the end of this time is *P*B.
*T*EMP10M *	Time delay of End Multi-Pulse for 10T Mark: This time defines the end location of each of the enabled inner pulses of a 10T mark. It starts at each enabled inner pulse boundary. The power level selected at the end of this time is *P*B.
*T*EMP11M *	Time delay of End Multi-Pulse for 11T Mark: This time defines the end location of each of the enabled inner pulses of a 11T mark. It starts at each enabled inner pulse boundary. The power level selected at the end of this time is *P*B.
*T*EMPLM *	Time delay of End Multi-Pulse for Long Mark: This time defines the end location of each of the enabled inner pulses of a 12T or longer mark. It starts at each enabled inner pulse boundary. The power level selected at the end of this time is *P*B.

* NOTE See Table I.3 of Annex I for definition of enable bit fields for Multi-T mode inner pulses

© ISO/IEC 2008 – All rights reserved
Copyright International Organization for Standardization
Provided by IHS under license with ISO
No reproduction or networking permitted without license from IHS
Not for Resale

Annex M
(normative)

Requirements for interchange

M.1 Equipment for writing

The disk under test shall have been written with arbitrary data by a disk drive for data interchange used in the operating environment.

M.2 Test equipment for reading

M.2.1 General

The read test shall be performed on a test drive in the test environment. The rotational direction and frequency of the disk when reading shall be as defined in 9.5.

M.2.2 Read Channel

M.2.2.1 Characteristics of the optical beam

The optical beam used for reading shall comply with the requirements of 9.2.

M.2.2.2 Read power

The read power shall be 420 µW ± 20 µW.

M.2.2.3 Read amplifier

The read amplifier after the photo detectors shall have a flat response from d.c. to 60 MHz within 1 dB.

M.2.2.4 Analog to binary conversion

The signals from the read amplifier shall be converted from analog to binary.

The converter for the Read Channel shall work properly for signals from user written marks with properties as defined in Clause 27.

M.2.2.5 Binary to digital conversion

The binary signal shall be converted to a digital signal according to the rules of the recording codes of Clause 17.

M.2.3 Tracking

The open-loop transfer function for the axial and radial tracking servo shall be

--`,,```,,,,````-`-`,,`,,`,`,,`---

© ISO/IEC 2008 – All rights reserved

Copyright International Organization for Standardization
Provided by IHS under license with ISO
No reproduction or networking permitted without license from IHS
Not for Resale

$$H_s(i\omega) = \frac{1}{c} \times \left(\frac{\omega_0}{i\omega} \right)^2 \times \frac{1 + \frac{i\omega c}{\omega_0}}{1 + \frac{i\omega}{c\omega_0}}$$

where $\omega = 2\pi f$, $\omega_0 = 2\pi f_0$, $i = \sqrt{-1}$

with an accuracy such that $|1 + H|$ shall not deviate more than ± 20 % from its nominal value in the bandwidth from 20 Hz to 20 kHz.

The constant c shall be 3. The open-loop 0 dB frequency f_0 shall be 1 700 Hz for the axial servo and 2 540 Hz for the radial servo. The open-loop d.c. gain of the axial servo shall be at least 80 dB.

M.3 Requirements for the digital read signals

A byte error is defined by a byte in which one or more bits have a wrong setting, as detected by the error detection and correction circuit.

M.3.1 Sector acceptance

Any Sector accepted as valid during the writing process shall not contain byte errors after the error correction circuit.

M.3.2 Sector Defect Management

Any Sector not accepted as valid during the writing process shall have been rewritten according to the rules for Defect Management.

M.4 Requirements for the digital servo signals

The focus of the optical beam shall not jump tracks unintentionally.

M.5 Requirement for interchange

An interchanged optical disk cartridge meets the requirements for interchangeability if it meets the requirements of M.3 and M.4 when it is written on an interchange drive according to M.1 and read on a test drive according to M.2. Data for interchange shall be written and read anywhere within the User Area.

© ISO/IEC 2008 – All rights reserved
Copyright International Organization for Standardization
Provided by IHS under license with ISO
No reproduction or networking permitted without license from IHS
Not for Resale

Annex N
(informative)

Office environment

N.1 Air cleanliness

Due to their construction and mode of operation, optical disk cartridges have considerable resistance to the effects of dust particles around and inside the disk drive. Consequently, it is not generally necessary to take special precautions to maintain a sufficiently low concentration of dust particles.

Operation in heavy concentrations of dust should be avoided, e.g. in a machine shop or on a building site.

Office environment implies an environment in which personnel may spend a full working day without protection and without suffering temporary or permanent discomfort.

N.2 Effects of operation

In the office environment (as well as other environments) it is possible for an optical disk drive to degrade the quality of the written marks if the read power is applied to a single track for a long period of time. This would happen if a media in a drive remains loaded, the drive remains in the ready status, and is in jump-back mode on one particular track.

The media manufacturer's selection of the value for the maximum read power allowed in the User Zones, as well as the optical drive manufacturer's read power management method, should reflect this possibility and be designed to minimize any risk to data integrity.

© ISO/IEC 2008 – All rights reserved

Copyright International Organization for Standardization
Provided by IHS under license with ISO
No reproduction or networking permitted without license from IHS
Not for Resale

Annex O
(informative)

Derivation of the operating climatic environment

This annex gives some background on how some of the conditions of the operating environment in 8.1.2 have been derived.

O.1 Standard climatic environment classes

The conditions of the ODC operating environment are, with a few exceptions mentioned below, based on parameter values of the IEC standard climatic environment class 3K3 described in IEC publication 721-3-3. This publication defines environmental classes for stationary use of equipment at weather-protected locations.

The IEC class 3K3 refers to climatic conditions which ". . . may be found in normal living or working areas, e.g. living rooms, rooms for general use (theatres restaurants etc.), offices, shops, workshops for electronic assemblies and other electrotechnical products, telecommunication centres, storage rooms for valuable and sensitive products."

O.2 Overtemperature considerations

While IEC class 3K3 defines the limits for the room climate only, the ODC operating environment specification in this International Standard takes into consideration also system and drive overtemperature. This means that when inserted in a drive, the ODC will sense a temperature which is above the ambient room temperature. The figures in the operating environment specification have been calculated from the assumption that overtemperature may be up to 20°C.

O.3 Absolute humidity

The introduction of the parameter "absolute humidity (unit: g water / m^3 of air)" is very useful when studying overtemperature. When the temperature rises inside a drive, the relative humidity goes down but the absolute humidity remains substantially constant. So, making room for overtemperature in the operating environment specification affects not only the upper temperature limit but also the lower relative humidity limit. The relationship between these parameters is shown in the climatogram (the relative humidity vs. temperature map) of the ODC operating environment, Figure O.1.

The absolute humidity restrictions influence the operating environment in the following two ways:

i. Combination of high temperatures and high relative humidities are excluded. Such combinations could have negative influence on the performance and the life of ODCs.

ii. Combinations of low temperatures and low relative humidities are excluded. Such combinations are very unlikely to occur in worldwide normal office environments.

O.4 Deviations from the IEC standard environment class

Apart from the change introduced by the overtemperature considerations above, there are a few more parameter values which are not based on IEC class 3K3. These are:

— Atmospheric pressure

--`,,```,,,,````-`-`,,`,,`,`,,`---

© ISO/IEC 2008 – All rights reserved
Copyright International Organization for Standardization
Provided by IHS under license with ISO
No reproduction or networking permitted without license from IHS
Not for Resale

The IEC 3K3 lower limit of 70 kPa has been extended to 60 kPa. ODCs according to this International Standard show no intrinsic pressure sensitivity and 70 kPa excludes some possible markets for ODCs.

— Absolute humidity

The IEC 3K3 value for the upper limit of 25 g/m^3 has been raised to 30 g/m^3 in view of some expected operation in portable devices outside the controlled office environment.

— Temperature

The maximum temperature around the ODC, i.e. room temperature plus overtemperature, has been limited to 55 °C (while IEC 3K3 + 20 °C would have become 60 °C). For ODCs according to this International Standard, however, the 55 °C limit is considered to be a physical limit above which operation (as well as storage) is not safe.

This means that equipment designers may want to ensure adequate cooling inside the drive especially when the room temperature approaches the upper IEC 3K3 limit of 40 °C.

— Further

The rates of change (the gradients) of temperature and relative humidity are not according to IEC 3K3.

O.5Wet bulb temperature specifications

Instead of specifying limits for the absolute humidity, some of the earlier standards for ODCs as well as those for other digital data storage media often use restrictions of the parameter "wet bulb temperature (unit: °C)" in order to avoid too severe combinations of high temperatures and high relative humidities.

In order to facilitate comparisons between different specifications, Figure O.2 and Table O.1 show wet bulb temperatures of interest for the ODC operating environment, as well as for the test and storage environments. Since wet bulb temperatures vary slightly with the atmospheric pressure, the diagram is valid for the normal pressure of 101,3 kPa only.

© ISO/IEC 2008 – All rights reserved

Copyright International Organization for Standardization
Provided by IHS under license with ISO
No reproduction or networking permitted without license from IHS
Not for Resale

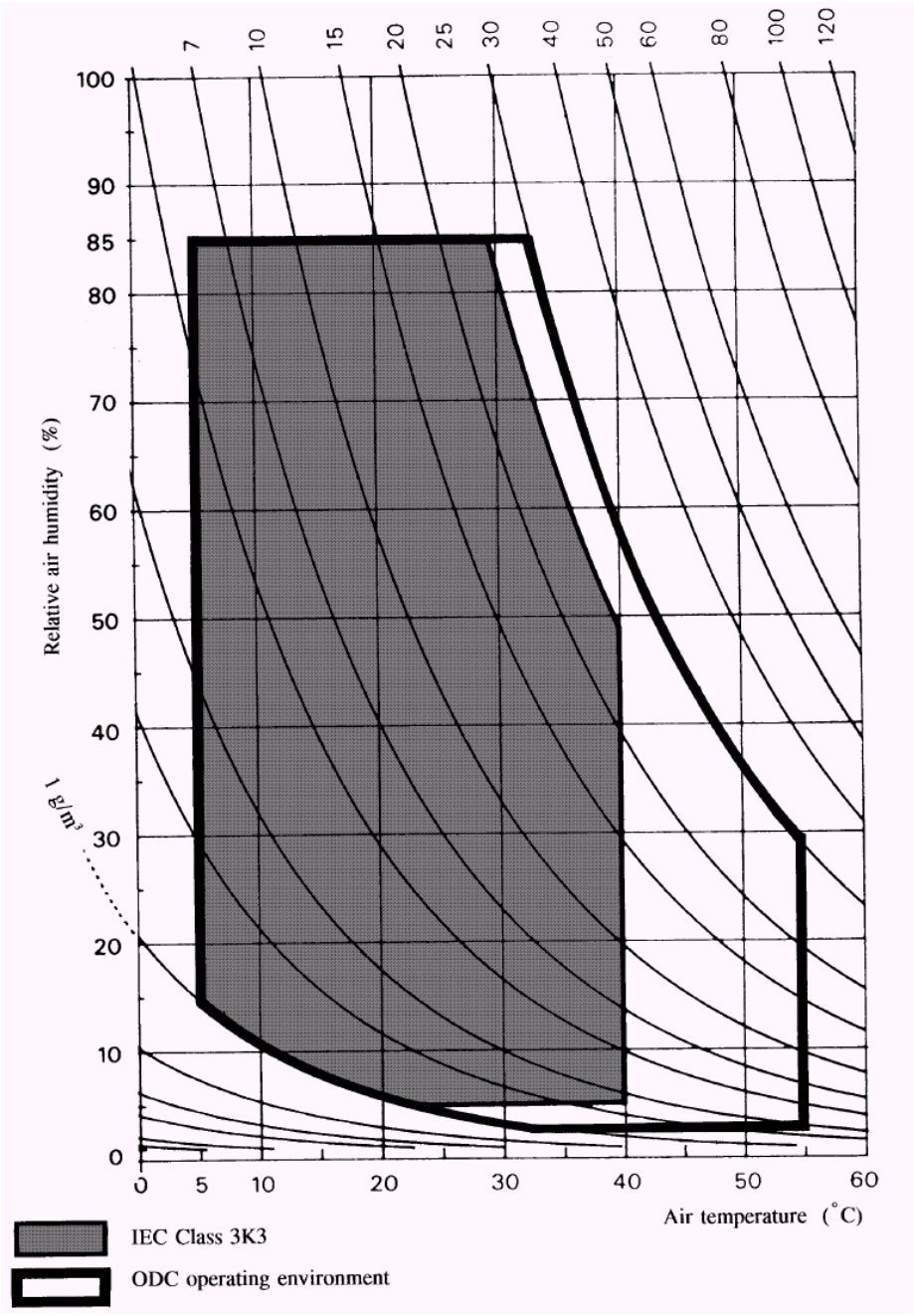

Figure O.1 — Climatogram of IEC Class 3K3 and the ODC operating environment

© ISO/IEC 2008 – All rights reserved
Copyright International Organization for Standardization
Provided by IHS under license with ISO
No reproduction or networking permitted without license from IHS
Not for Resale

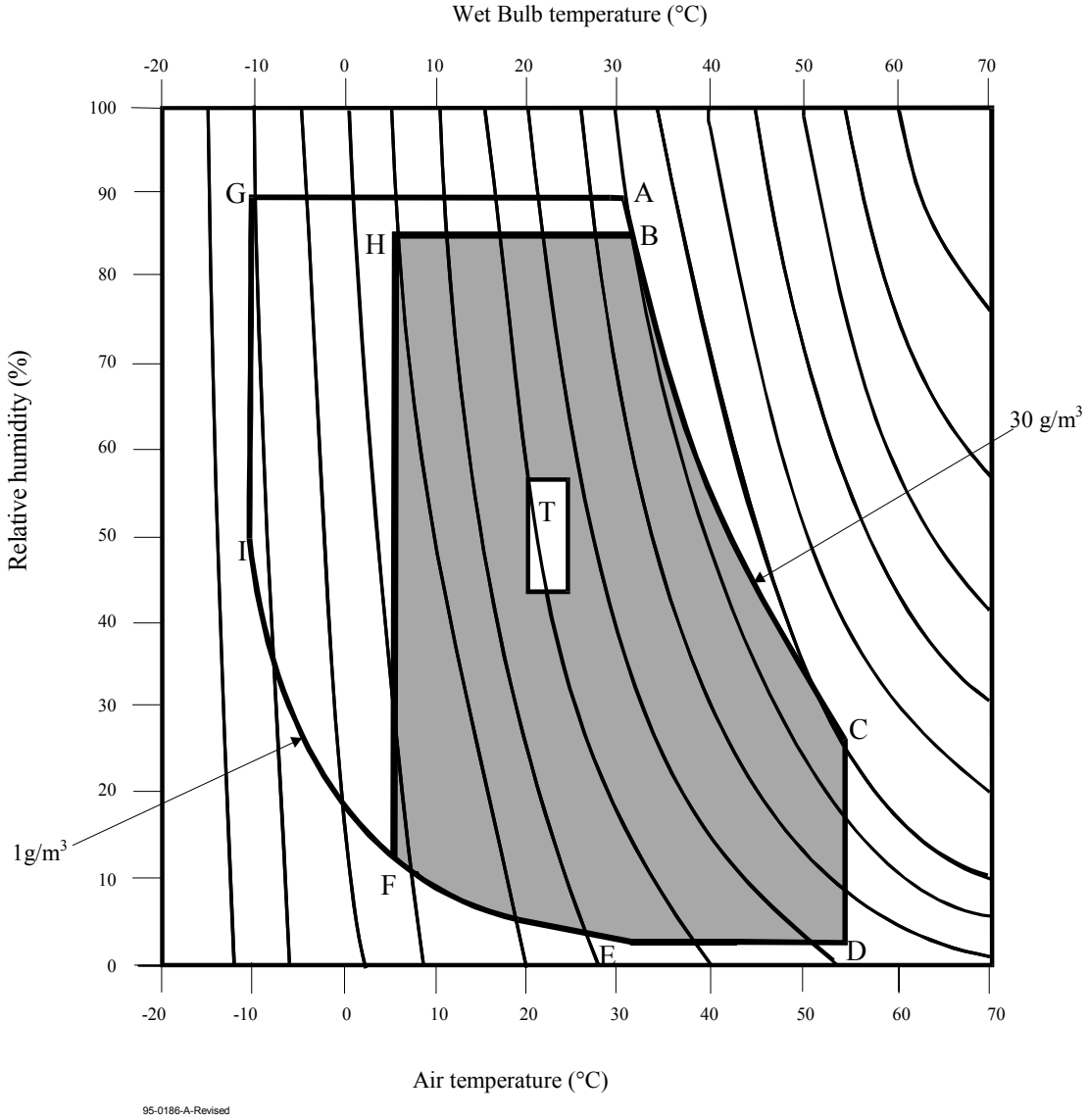

Figure O.2 — Wet bulb temperatures of the operating and storage environments

The points A to I and area T are defined in Table O.1.

© ISO/IEC 2008 – All rights reserved

Copyright International Organization for Standardization
Provided by IHS under license with ISO
No reproduction or networking permitted without license from IHS
Not for Resale

Table O.1 — Position of the main points of Figure O.2

	Air temperature °C	Relative humidity %	Wet bulb temperature °C
A	31,7	90,0	30,3
B	32,8	85,0	30,6
C	55,0	28,8	35,5
D	55,0	3,0	22,2
E	31,7	3,0	12,1
F	5,0	14,7	- 1,4
G	- 10,0	90,0	- 10,3
H	5,0	85,0	3,9
I	10,0	46,8	- 11,6
Test environment (T)	23,0 ± 2,0	50,0 ± 5,0	---
Storage environment	Region determined by A-B-C-D-E-F-G		
Operating environment	Region determined by B-C-D-E-F-H		

© ISO/IEC 2008 – All rights reserved
Copyright International Organization for Standardization
Provided by IHS under license with ISO
No reproduction or networking permitted without license from IHS
Not for Resale

Annex P
(informative)

Transportation

P.1 General

As transportation occurs under a wide range of temperature and humidity variations, for different periods, by many methods of transport and in all parts of the world it is not possible to specify conditions for transportation or for packaging.

P.2 Packaging

The form of packaging should be agreed between sender and recipient or, in the absence of such agreement, is the responsibility of the sender. It should take account of the following hazards.

P.2.1 Temperature and humidity

Insulation and wrapping should be designed to maintain the conditions for storage over the estimated period of transportation.

P.2.2 Impact loads and vibration

Avoid mechanical loads that would distort the shape of the cartridge.

Avoid dropping the cartridge.

Cartridges should be packed in a rigid box containing adequate shock absorbent material.

The final box should have a clean interior and a construction that provides sealing to prevent the ingress of dirt and moisture.

--`,,```,,,,````-`-`,,`,,`,`,,`---
© ISO/IEC 2008 – All rights reserved

Copyright International Organization for Standardization
Provided by IHS under license with ISO
No reproduction or networking permitted without license from IHS
Not for Resale

Annex Q
(informative)

Track deviation measurement

The deviation of a track from its nominal location is measured in the same way as a drive sees a track, i.e. through a tracking servo. The strength of the Reference Servo used for the test is in general less that the strength of the same servo in a normal drive. The difference in strength is intended for margins in the drive. The deviation of the track is related to the tracking error between the track and the focus of the optical beam, remaining after the Reference Servo. The tracking error directly influences the performance of the drive, and is the best criterion for testing track deviations.

The specification of the axial and radial deviations can be described in the same terms. Therefore, this annex applies to both axial and radial track deviations.

Q.1 Relation between requirements

The acceleration required by the motor of the tracking servo to make the focus of the optical beam follow the tracks on the disk (see 11.4.6 and 11.4.8) is a measure for the allowed deviations of the tracks. An additional measure is the allowed tracking error between the focus and the track (see 22.2.4). The relation between both is given in Figure Q.1 where the maximum allowed amplitude of a sinusoidal track deviation is given as a function of the frequency of the deviation. It is assumed in the figure that there is only one sinusoidal deviation present at a time.

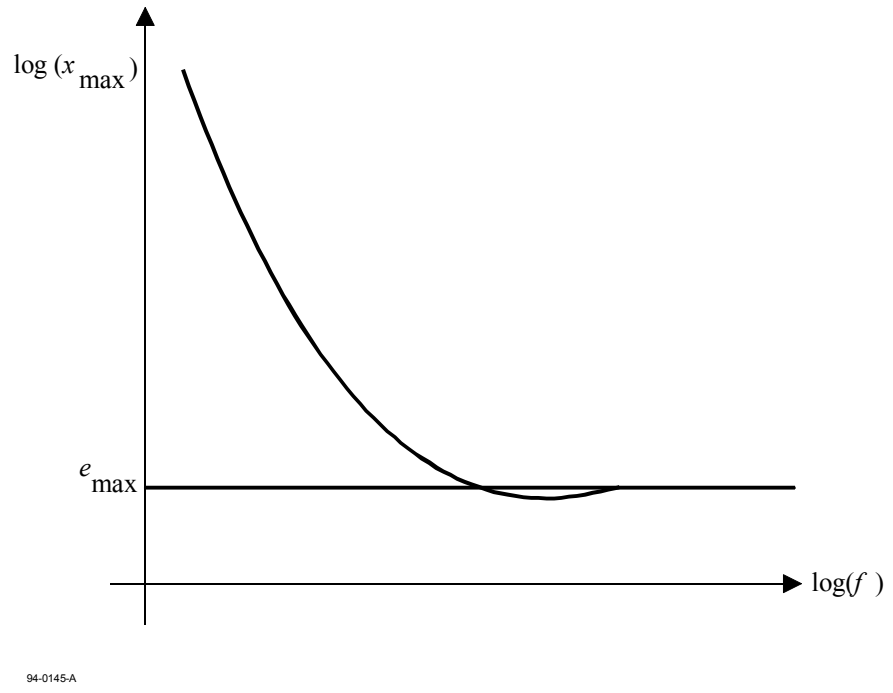

Figure Q.1 — Maximum allowed amplitude of a single, sinusoidal track deviation

At low frequencies the maximum allowed amplitude x_{max} is given by

$$x_{max} = a_{max} / (2\pi f)^2, \quad (1)$$

where a_{max} is the maximum acceleration of the servo motor.

© ISO/IEC 2008 – All rights reserved
Copyright International Organization for Standardization
Provided by IHS under license with ISO
No reproduction or networking permitted without license from IHS
Not for Resale

At high frequencies the maximum allowed amplitude x_{max} is given by

$$x_{max} = e_{max} \tag{2}$$

where e_{max} is the maximum allowed tracking error. The connection between both frequency regions is given in Q.3.

Q.2 Reference Servo

The above restrictions of the track deviations are equal to the restriction of the track deviations for a Reference Servo. A Reference Servo has a well-defined transfer function, and reduces a single, sinusoidal track deviation with amplitude x_{max} to a tracking error e_{max} as in Figure Q.1.

The open-loop transfer function of the Reference Servo shall be

$$H_s(i\omega) = \frac{1}{c} \times \left(\frac{\omega_0}{i\omega}\right)^2 \times \frac{1 + \frac{i\omega c}{\omega_0}}{1 + \frac{i\omega}{c\omega_0}} \tag{3}$$

where $i = \sqrt{-1}$, $\omega = 2\pi f$ and $\omega_0 = 2\pi f_0$, with f_0 the 0 dB frequency of the open-loop transfer function. The constant c gives the cross-over frequencies of the lead-lag network of the servo: the lead break frequency $f_1 = \frac{f_0}{c}$ and the lag break frequency $f_2 = f_0 \times c$. The reduction of a track deviation x to a tracking error e by the Reference Servo is given by

$$\frac{e}{x} = \frac{1}{1 + H_s} \tag{4}$$

If the 0 dB frequency is specified as

$$\omega_0 = \sqrt{\frac{a_{max} c}{e_{max}}} \tag{5}$$

then a low-frequency track deviation with an acceleration a_{max} will be reduced to a tracking error e_{max}, and a high frequency track deviation will not be reduced. The curve in Figure Q.1 is given by

$$x_{max} = e_{max} |1 + H_s| \tag{6}$$

The maximum acceleration required from the motor of this Reference Servo is

$$a_{max}\,(\text{motor}) = e_{max}\, \omega^2 |1 + H_s| \tag{7}$$

At low frequencies $f > f_0 / c$ applies

$$a_{max}\,(\text{motor}) = a_{max}\,(\text{track}) = \frac{\omega_0{}^2 e_{max}}{c} \tag{8}$$

Hence, it is permitted to use a_{max}(motor) as specified for low frequencies in 11.4.6 and 11.4.8 for the calculation of ω_0 of a Reference Servo.

© ISO/IEC 2008 All rights reserved

Copyright International Organization for Standardization
Provided by IHS under license with ISO
No reproduction or networking permitted without license from IHS
Not for Resale

Q.3 Requirement for track deviations

The track deviations shall be such that, when tracking with a Reference Servo on a disk rotating at the specified frequency, the tracking error shall not be larger than e_{max} during more than 10 µs.

The open-loop transfer function of the Reference Servo for axial and radial tracking shall be given by equation (3) within an accuracy such that $|1 + H|$ does not differ by more than ± 20% from its nominal value in a bandwidth from 20 Hz to 150 kHz. The constant c shall be 3. The 0 dB frequency $\frac{\omega_0}{2\pi}$ shall be given by equation (5), where a_{max} and e_{max} for axial and radial tracking are specified in 11.4.6, 11.4.8 and 22.2.4.

Q.4 Measurement implementation

Three possible implementations for axial or radial measurement systems have been given below.

H_a is the open-loop transfer function of the actual tracking servo of the drive. H_s is the transfer function for the Reference Servo as given in equation (3). *x* and *y* are the position of the track and the focus of the optical beam. e_s is the tracking error after a Reference Servo, the signal of which has to be checked according to the previous paragraph.

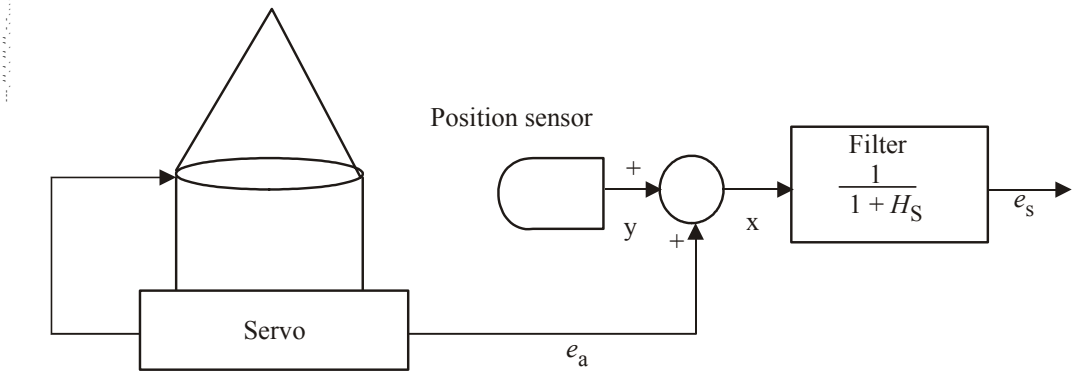

Figure Q.2 — Implementation of a Reference Servo by filtering the track position signal with the reduction characteristics of the Reference Servo

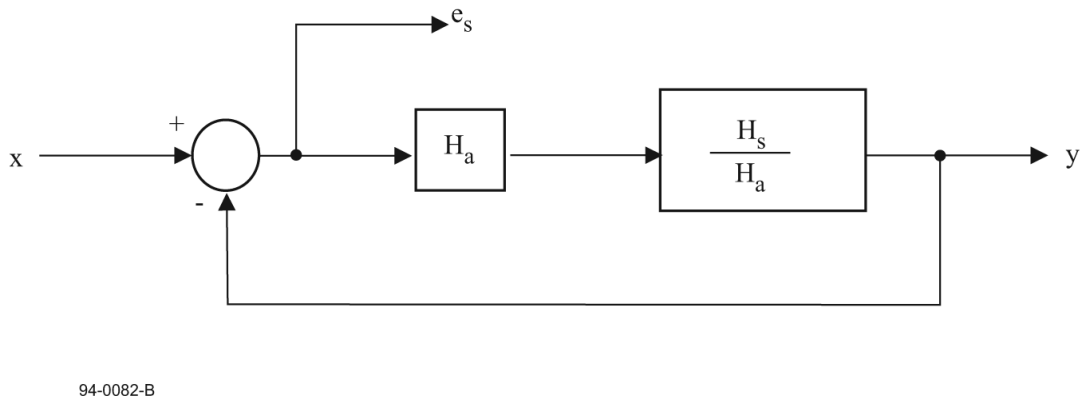

Figure Q.3 — Implementation of a Reference Servo by changing the transfer function of the actual servo

© ISO/IEC 2008 – All rights reserved
Copyright International Organization for Standardization
Provided by IHS under license with ISO
No reproduction or networking permitted without license from IHS
Not for Resale

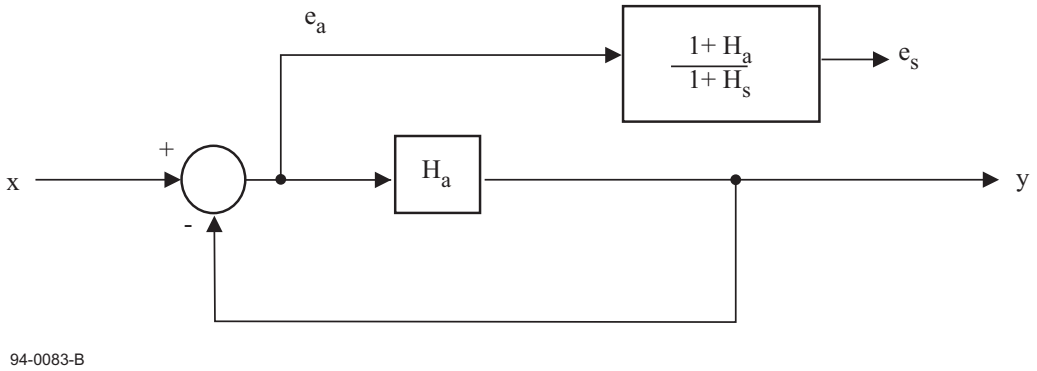

Figure Q.4 — Implementation of a Reference Servo by changing the tracking error of the actual servo

The optimum implementation depends on the characteristics H_a and H_s. Good results for motors in leaf springs are often obtained by using separate circuits in a low and high frequency channel. The implementation of Figure Q.2 is used in the low-frequency channel, while that of Figures Q.3 or Q.4 is used in the high-frequency channel. The signals from both channels are added with a reversed cross-over filter to get the required tracking error. In the low-frequency channel one can also use the current through the motor as a measure of the acceleration of the motor, provided the latter is free from hysteresis. The current must be corrected for the transfer function of the motor and then be converted to a tracking error with a filter with a transfer function $\frac{e}{a} = \frac{e}{x\omega^2}$ derived from equation (4).

© ISO/IEC 2008 – All rights reserved

Copyright International Organization for Standardization
Provided by IHS under license with ISO
No reproduction or networking permitted without license from IHS
Not for Resale

Annex R
(informative)

Measurement of the vertical birefringence of the cover layer

This annex describes a non-contact measurement method for optical disk cover layer birefringence. This technique will yield average or bulk values of both in-plane birefringence (IPB) and vertical birefringence (VB) with one procedure. The method uses a slightly modified variable angle spectroscopic ellipsometer (VASE), although the variable wavelength capability is unnecessary for a simple characterization at the operating point of this International Standard.

The method assumes the principal optical axes of the cover layer align with the polar r, φ, z directions of the disk, which is valid for the type of cover layer considered.

Finally, the method described also assumes that the contribution of the ellipticity of the coated Phase Change film(s) to the measured optical retardation is negligible compared to the contribution of cover layer material.

An ellipsometric measurement of the phase retardation between orthogonal polarization states for a range of incident angles is made to uniquely determine the cover layer refractive indexes for the three principal directions (N_r, N_φ, N_z). This range of incident angles should be restricted only to limitations of the apparatus on the low angle side, and beam walk off on the high angle side. Angles ranging from - 70° to + 70° are recommended. Three angles would generally be the minimum necessary to establish VB.

For a disk where the principal optical axes are aligned with the cylindrical coordinates of the disk (which is almost universally the case), the following equation expresses the retardation as a function of angle of incidence to the indexes of the disk: N_r, N_φ, N_z. The retardation data are regression fit to the non-linear analytical expression given below, and the indexes are determined as free parameters.

$$\Delta = d \times \left(\sqrt{N_r^2 - \sin^2(\theta)} - \frac{N_\varphi}{N_z} \sqrt{N_z^2 - \sin^2(\theta)} \right)$$

where Δ is the retardation and *d* is the thickness of the cover layer. The birefringence results from the differences between the indexes

In-plane: $\Delta N_{in} = N_r - N_\varphi$

Vertical: $\Delta N_{vert} = 0{,}5\ (N_r + N_\varphi) - N_z$

The dimensionless birefringence can be expressed in length units by multiplying ΔN_{in} or ΔN_{vert} by the cover layer thickness. In this case, the birefringence is expressed as nm of retardation.

© ISO/IEC 2008 – All rights reserved
Copyright International Organization for Standardization
Provided by IHS under license with ISO
No reproduction or networking permitted without license from IHS
Not for Resale

Annex S
(informative)

Start Position Shift (SPS) implementation

S.1 Start Position Shift purpose

The purpose of SPS is to change the physical position of the start of recorded data to extend the cycle life of Type RW media. The rewrite cycle life of Type RW media is increased using two mechanisms. The first mechanism is to distribute the thermal shock to the recording layer near the beginning and end of the written data area. The second mechanism is to shift the position and polarity of the recorded data to minimize the effect of writing identical data patterns in the same location every time.

The SPS algorithm uses two random shift values *M* and *N* and a random polarity bit *P*. The value of *M* shifts the data start position. The value of *N* shifts the start and end positions of the written data. The polarity of the data to be written is controlled by the value of *P*.

S.2 Start Position Shift random signal generation

The SPS random signal generator circuit is shown in Figure S.1. The circuit consists of a feedback shift register in which bits r_0 to r_6 are used as the value of *M*, r_7 to r_{13} are used as the value of *N*, and r_{14} is used as *P*.

The shift register can be continuously clocked using the channel clock source, and the values of *M*, *N*, and *P* are sampled (latched) prior to writing each Sector.

The feedback shift register shall be initialized with all bits set to ONE. If the register is initialized with all bits set to ZERO, the register value will remain unchanged (all bits equal ZERO).

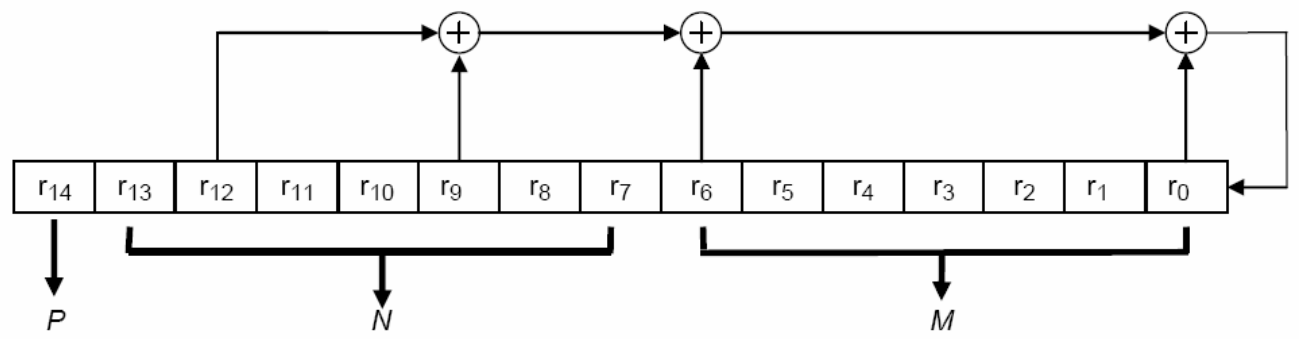

Figure S.1 — SPS random signal generator circuit

M = 0 to 127 Data position shift

N = 0 to127 Start position shift

P = 0 or 1 Positive / negative write polarity

⊕ means Exclusive-OR logical operation.

© ISO/IEC 2008 – All rights reserved

Copyright International Organization for Standardization
Provided by IHS under license with ISO
No reproduction or networking permitted without license from IHS
Not for Resale

Annex T
(informative)

Sector retirement guidelines

This International Standard assumes approximately 75 000 Sectors may be replaced in any of the following cases:

— A Sector does not have at least 3 of 5 matching Track numbers and 2 of 3 matching Sector numbers with valid ADIP parity.

— A Sector has a PBA that is contradictory to the one anticipated by the preceding PBAs.

— The total number of defective bytes exceeds 152 bytes in a Sector.

— The number of defective bytes exceeds 6 bytes in any ECC interleave (codeword).

— For Type WORM media, the number of data transitions in the VAP field exceeds 20 in an unrecorded Sector.

— The axial tracking error exceeds acceptable limits during writing.

— The radial tracking error exceeds acceptable limits during writing.

— The wobble groove PLL timing error exceeds acceptable limits during writing.

© ISO/IEC 2008 – All rights reserved
Copyright International Organization for Standardization
Provided by IHS under license with ISO
No reproduction or networking permitted without license from IHS
Not for Resale

Annex U
(informative)

Guidelines for the use of Type WORM ODCs

This annex lists some important points to be observed when using Type WORM media specified by this International Standard.

a. Read the status of the Media Sensor holes and the SDI Sectors when the ODC is inserted to ascertain the media type, so as to enable and/or disable the appropriate host commands.

b. Read the DDS Sectors to determine if the disk has been initialized. If it has been initialized, do not allow modification or amendment of the DDS. If it has not been initialized, do not allow logical block access to the WORM Zone.

c. Before writing a Sector, it must be determined whether or not the Sector has already been written. This can be done by checking the VAP field for data transitions prior to writing each Sector. If sufficient transitions in the VAP field are detected, the Sector shall not be written.

d. Disallow commands that can directly or indirectly alter written data such as SCSI Erase.

e. It is recommended that SCSI Write Long and SCSI Write PBA commands be disallowed.

© ISO/IEC 2008 – All rights reserved

Copyright International Organization for Standardization
Provided by IHS under license with ISO
No reproduction or networking permitted without license from IHS
Not for Resale

Annex V
(informative)

Laser power calibration for evaluation of media power parameters

V.1 Variance of testing condition

The laser power of the media tester should be calibrated carefully since the values of the media power parameters, defined in 24.3, are easily affected by the variation allowed for in the Reference Drive. The laser spot profile on the recording layer varies with the optical characteristics allowed by the Reference Drive as specified in 9.2. Table V.1 shows the best and worst conditions allowed by the Reference Drive from the point of view of the write power sensitivity.

Table V.1 — The best and worst conditions allowed for the Reference Drive

Parameter	Best condition	Worst condition
λ	405 nm	410 nm
λ/NA	471 nm	488 nm
Wave front aberration	0	0,033 λ rms
Disk tilt	0	5,6 mrad
Variation of the cover layer thickness	0	2 μm

V.2 Power calibration

Laser power calibration of the tester should be done in the following manner. Use of a high-speed front power monitor is recommended for precise calibration.

Step 1

Calibrate the high-speed front monitor by using a power meter (Figure V.1).

— The calibration can be done in a d.c. laser operation with a d.c. power meter.

— For the purpose of observing the write pulse shape during writing, a high speed (>500 MHz) front power monitor is recommended.

© ISO/IEC 2008 – All rights reserved
Copyright International Organization for Standardization
Provided by IHS under license with ISO
No reproduction or networking permitted without license from IHS
Not for Resale

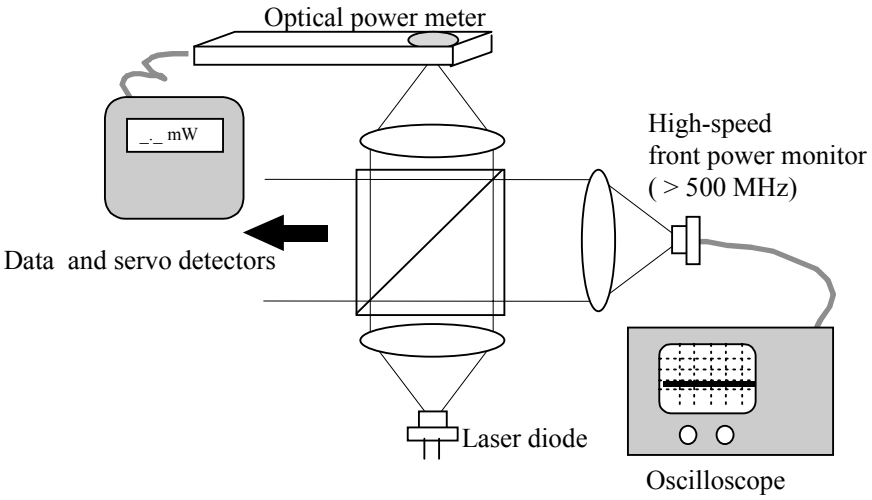

Figure V.1 — Calibration of the front power monitor

Step 2

Directly observe the write pulse shape during writing (Figure V.2).

— Pulse power in focused condition is different from that in the not-focused condition because of the self coupled effect of the laser diode.

— Pulse power levels and pulse widths should be carefully observed in real testing condition.

— Check the power levels and timing of the pulses. Verify that the pulses correspond with the data recorded in the SDI Sectors of the disk.

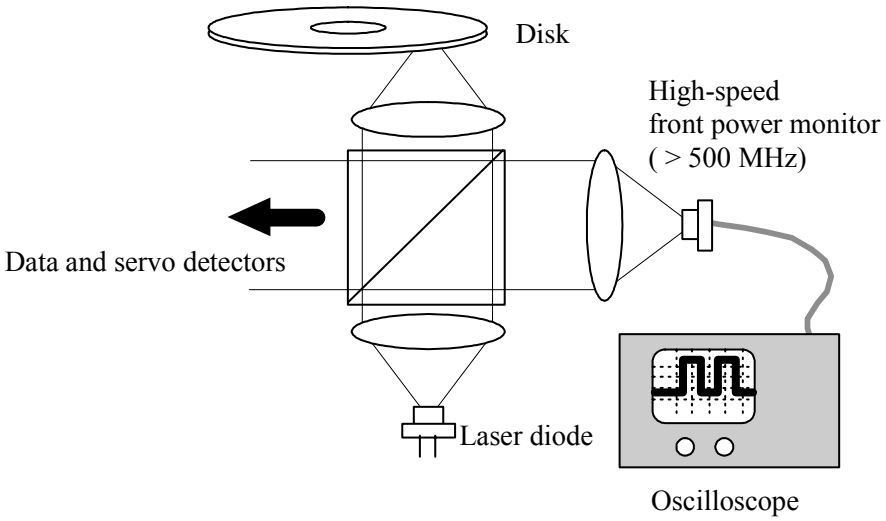

Figure V.2 — Measurement of pulse power and pulse width

© ISO/IEC 2008 – All rights reserved
Copyright International Organization for Standardization
Provided by IHS under license with ISO
No reproduction or networking permitted without license from IHS
Not for Resale

Step 3

Measure the write pulse power levels and pulse widths (Figure V.3).

— Ringing can be removed by using a low-pass filter.

— For precise pulse energy measurement, average power level measurement using a fixed pulse duty cycle is recommended.

Notes for measurement:

— Disk temperature

Disk temperature should be kept at the test temperature of 23 °C ± 2 °C. Internal temperature may rise for an enclosed tester.

— Stray light

The stray light within the optical head may enter the objective lens and form a stray beam spot. Even if the temperature increase in the optical beam is small, the measurement for the light power through the objective lens may be affected.

— Contamination of optical components (especially the objective lens)

If the light is absorbed by dust or other debris, the light power through the objective lens decreases. This can be measured by the power meter and does not, therefore, result in any complications. If the light is diverted instead of being absorbed, not all of the light power through the objective lens contributes to increasing the temperature at the recording layer of the media. Frequent cleaning is required for accurate results.

— Beam spot size and tilt

Before the measurement of media power parameters, the beam profile of the tester should be checked by optical knife edge profiler. The measured spot diameter should be near the diffraction-limited size defined by the optimum value λ/NA: 471 nm of the Reference Drive. The disk tilt should also be carefully adjusted to be near zero.

--`,,```,,,,````-`-`,,`,,`,`,,`---
© ISO/IEC 2008 – All rights reserved
Copyright International Organization for Standardization
Provided by IHS under license with ISO
No reproduction or networking permitted without license from IHS
Not for Resale

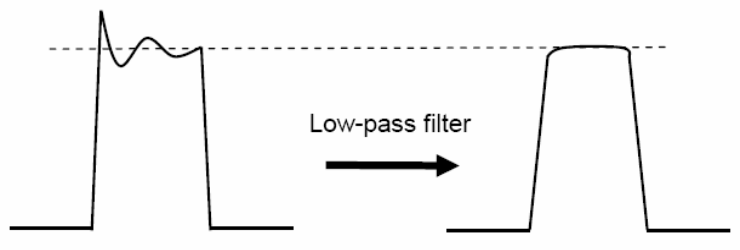

Figure V.3.a — Elimination of ringing using a low-pass filter

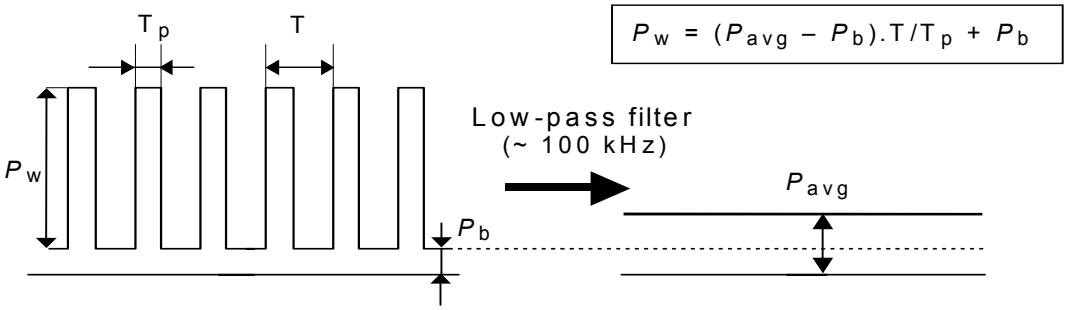

Figure V.3.b — Determination of pulse power level from average power level

Figure V.3 — Determination of pulse power levels

--`,,```,,,,````-`-`,,`,,`,`,,`---

© ISO/IEC 2008 – All rights reserved

Copyright International Organization for Standardization
Provided by IHS under license with ISO
No reproduction or networking permitted without license from IHS
Not for Resale

ICS 35.220.30

Price based on 141 pages

--`,,```,,,,````-`-`,,`,,`,`,,`---

© ISO/IEC 2008 – All rights reserved

Copyright International Organization for Standardization
Provided by IHS under license with ISO
No reproduction or networking permitted without license from IHS

Not for Resale