INTERNATIONAL STANDARD

ISO/IEC 11889-2

First edition
2009-05-15

Information technology — Trusted Platform Module —

Part 2: Design principles

Technologies de l'information — Module de plate-forme de confiance —

Partie 2: Principes de conception

Reference number
ISO/IEC 11889-2:2009(E)

© ISO/IEC 2009

Copyright International Organization for Standardization
Provided by IHS under license with ISO
No reproduction or networking permitted without license from IHS

Not for Resale

PDF disclaimer

This PDF file may contain embedded typefaces. In accordance with Adobe's licensing policy, this file may be printed or viewed but shall not be edited unless the typefaces which are embedded are licensed to and installed on the computer performing the editing. In downloading this file, parties accept therein the responsibility of not infringing Adobe's licensing policy. The ISO Central Secretariat accepts no liability in this area.

Adobe is a trademark of Adobe Systems Incorporated.

Details of the software products used to create this PDF file can be found in the General Info relative to the file; the PDF-creation parameters were optimized for printing. Every care has been taken to ensure that the file is suitable for use by ISO member bodies. In the unlikely event that a problem relating to it is found, please inform the Central Secretariat at the address given below.



COPYRIGHT PROTECTED DOCUMENT

© ISO/IEC 2009

All rights reserved. Unless otherwise specified, no part of this publication may be reproduced or utilized in any form or by any means, electronic or mechanical, including photocopying and microfilm, without permission in writing from either ISO at the address below or ISO's member body in the country of the requester.

ISO copyright office
Case postale 56 • CH-1211 Geneva 20
Tel. + 41 22 749 01 11
Fax + 41 22 749 09 47
E-mail copyright@iso.org
Web www.iso.org

Published in Switzerland

--`,,```,,,,````-`-`,,`,,`,`,,`---

Copyright International Organization for Standardization
Provided by IHS under license with ISO
No reproduction or networking permitted without license from IHS

© ISO/IEC 2009 – All rights reserved

Not for Resale

Table of Contents

1. Scope 1
1.1 Key words 1
1.2 Statement Type 1
2. Normative references 2
3. Abbreviated Terms 3
4. Conformance 5
4.1 Introduction 5
4.2 Threat 6
4.3 Protection of functions 6
4.4 Protection of information 6
4.5 Side effects 7
4.6 Exceptions and clarifications 7
5. TPM Architecture 8
5.1 Interoperability 8
5.2 Components 8
5.2.1 Input and Output 9
5.2.2 Cryptographic Co-Processor 9
5.2.3 Key Generation 11
5.2.4 HMAC Engine 12
5.2.5 Random Number Generator 13
5.2.6 SHA-1 Engine 15
5.2.7 Power Detection 16
5.2.8 Opt-In 16
5.2.9 Execution Engine 17
5.2.10 Non-Volatile Memory 17
5.3 Data Integrity Register (DIR) 18
5.4 Platform Configuration Register (PCR) 18
6. Endorsement Key Creation 20
6.1 Controlling Access to PRIVEK 21
6.2 Controlling Access to PUBEK 21
7. Attestation Identity Keys 22
8. TPM Ownership 23
8.1 Platform Ownership and Root of Trust for Storage 23
9. Authentication and Authorization Data 24
9.1 Dictionary Attack Considerations 25
10. TPM Operation 26
10.1 TPM Initialization & Operation State Flow 27
10.1.1 Initialization 27

© ISO/IEC 2009 All rights reserved

Copyright International Organization for Standardization
Provided by IHS under license with ISO
No reproduction or networking permitted without license from IHS
Not for Resale

10.2 Self-Test Modes 28
10.2.1 Operational Self-Test 29
10.3 Startup 32
10.4 Operational Mode 33
10.4.1 Enabling a TPM 34
10.4.2 Activating a TPM 35
10.4.3 Taking TPM Ownership 36
10.4.4 Transitioning Between Operational States 38
10.5 Clearing the TPM 38
11. Physical Presence 40
12. Root of Trust for Reporting (RTR) 42
12.1 Platform Identity 42
12.2 RTR to Platform Binding 43
12.3 Platform Identity and Privacy Considerations 43
12.4 Attestation Identity Keys 43
12.4.1 AIK Creation 44
12.4.2 AIK Storage 45
13. Root of Trust for Storage (RTS) 46
13.1 Loading and Unloading Blobs 46
14. Transport Sessions and Authorization Protocols 47
14.1 Authorization Session Setup 48
14.2 Parameter Declarations for OIAP and OSAP Examples 50
14.2.1 Object-Independent Authorization Protocol (OIAP) 52
14.2.2 Object-Specific Authorization Protocol (OSAP) 56
14.3 Authorization Session Handles 59
14.4 Authorization-Data Insertion Protocol (ADIP) 60
14.5 AuthData Change Protocol (ADCP) 64
14.6 Asymmetric Authorization Change Protocol (AACP) 65
15. ISO/IEC 19790 Evaluations 66
15.1 TPM Profile for successful ISO/IEC 19790 evaluation 66
16. Maintenance 67
16.1 Field Upgrade 69
17. Proof of Locality 70
18. Monotonic Counter 71
19. Transport Protection 74
19.1 Transport encryption and authorization 75
19.1.1 MGF1 parameters 77
19.1.2 HMAC calculation 78
19.1.3 Transport log creation 78
19.1.4 Additional Encryption Mechanisms 78

--`,,```,,,,````-`-`,,`,,`,`,,`---
© ISO/IEC 2009 – All rights reserved
Copyright International Organization for Standardization
Provided by IHS under license with ISO
No reproduction or networking permitted without license from IHS
Not for Resale

19.2 Transport Error Handling 79
19.3 Exclusive Transport Sessions 79
19.4 Transport Audit Handling 80
19.4.1 Auditing of wrapped commands 80
20. Audit Commands 81
20.1 Audit Monotonic Counter 83
21. Design Section on Time Stamping 84
21.1 Tick Components 84
21.2 Basic Tick Stamp 85
21.3 Associating a TCV with UTC 85
21.4 Additional Comments and Questions 87
22. Context Management 89
23. Eviction 91
24. Session pool 92
25. Initialization Operations 93
26. HMAC digest rules 94
27. Generic authorization session termination rules 95
28. PCR Grand Unification Theory 96
28.1 Validate Key for use 98
29. Non Volatile Storage 100
29.1 NV storage design principles 101
29.1.1 NV Storage use models 101
29.2 Use of NV storage during manufacturing 103
30. Delegation Model 104
30.1 Table Requirements 104
30.2 How this works 105
30.3 Family Table 106
30.4 Delegate Table 107
30.5 Delegation Administration Control 108
30.5.1 Control in Phase 1 109
30.5.2 Control in Phase 2 110
30.5.3 Control in Phase 3 110
30.6 Family Verification 110
30.7 Use of commands for different states of TPM 112
30.8 Delegation Authorization Values 112
30.8.1 Using the authorization value 112
30.9 DSAP description 113
31. Physical Presence 116
31.1 Use of Physical Presence 116
32. TPM Internal Asymmetric Encryption 117

© ISO/IEC 2009 – All rights reserved

Copyright International Organization for Standardization
Provided by IHS under license with ISO
No reproduction or networking permitted without license from IHS
Not for Resale

32.1.1 TPM_ES_RSAESOAEP_SHA1_MGF1 117
32.1.2 TPM_ES_RSAESPKCSV15 118
32.1.3 TPM_ES_SYM_CTR 118
32.1.4 TPM_ES_SYM_OFB 118
32.2 TPM Internal Digital Signatures 118
32.2.1 TPM_SS_RSASSAPKCS1v15_SHA1 119
32.2.2 TPM_SS_RSASSAPKCS1v15_DER 119
32.2.3 TPM_SS_RSASSAPKCS1v15_INFO 120
32.2.4 Use of Signature Schemes 120
33. Key Usage Table 121
34. Direct Anonymous Attestation 123
34.1 TPM_DAA_JOIN 123
34.2 TPM_DAA_Sign 124
34.3 DAA Command summary 125
34.3.1 TPM setup 125
34.3.2 JOIN 126
34.3.3 SIGN 129
35. General Purpose IO 132
36. Redirection 133
37. Structure Versioning 134
38. Certified Migration Key Type 135
38.1 Certified Migration Requirements 135
38.2 Key Creation 136
38.3 Migrate CMK to a MA 136
38.4 Migrate CMK to a MSA 136
39. Revoke Trust 138
40. Mandatory and Optional Functional Blocks 139
41. 1.1a and 1.2 Differences 142
42. Bibliography 143

Copyright International Organization for Standardization
Provided by IHS under license with ISO
No reproduction or networking permitted without license from IHS
Not for Resale
© ISO/IEC 2009 – All rights reserved

Foreword

ISO (the International Organization for Standardization) and IEC (the International Electrotechnical Commission) form the specialized system for worldwide standardization. National bodies that are members of ISO or IEC participate in the development of International Standards through technical committees established by the respective organization to deal with particular fields of technical activity. ISO and IEC technical committees collaborate in fields of mutual interest. Other international organizations, governmental and non-governmental, in liaison with ISO and IEC, also take part in the work. In the field of information technology, ISO and IEC have established a joint technical committee, ISO/IEC JTC 1.

International Standards are drafted in accordance with the rules given in the ISO/IEC Directives, Part 2.

The main task of the joint technical committee is to prepare International Standards. Draft International Standards adopted by the joint technical committee are circulated to national bodies for voting. Publication as an International Standard requires approval by at least 75 % of the national bodies casting a vote.

Attention is drawn to the possibility that some of the elements of this document may be the subject of patent rights. ISO and IEC shall not be held responsible for identifying any or all such patent rights.

ISO/IEC 11889-2 was prepared by the Trusted Computing Group (TCG) and was adopted, under the PAS procedure, by Joint Technical Committee ISO/IEC JTC 1, *Information technology*, in parallel with its approval by national bodies of ISO and IEC.

ISO/IEC 11889 consists of the following parts, under the general title *Information technology — Trusted Platform Module*:

— *Part 1: Overview*

— *Part 2: Design principles*

— *Part 3: Structures*

— *Part 4: Commands*

© ISO/IEC 2009 All rights reserved

Copyright International Organization for Standardization
Provided by IHS under license with ISO
No reproduction or networking permitted without license from IHS
Not for Resale

Introduction

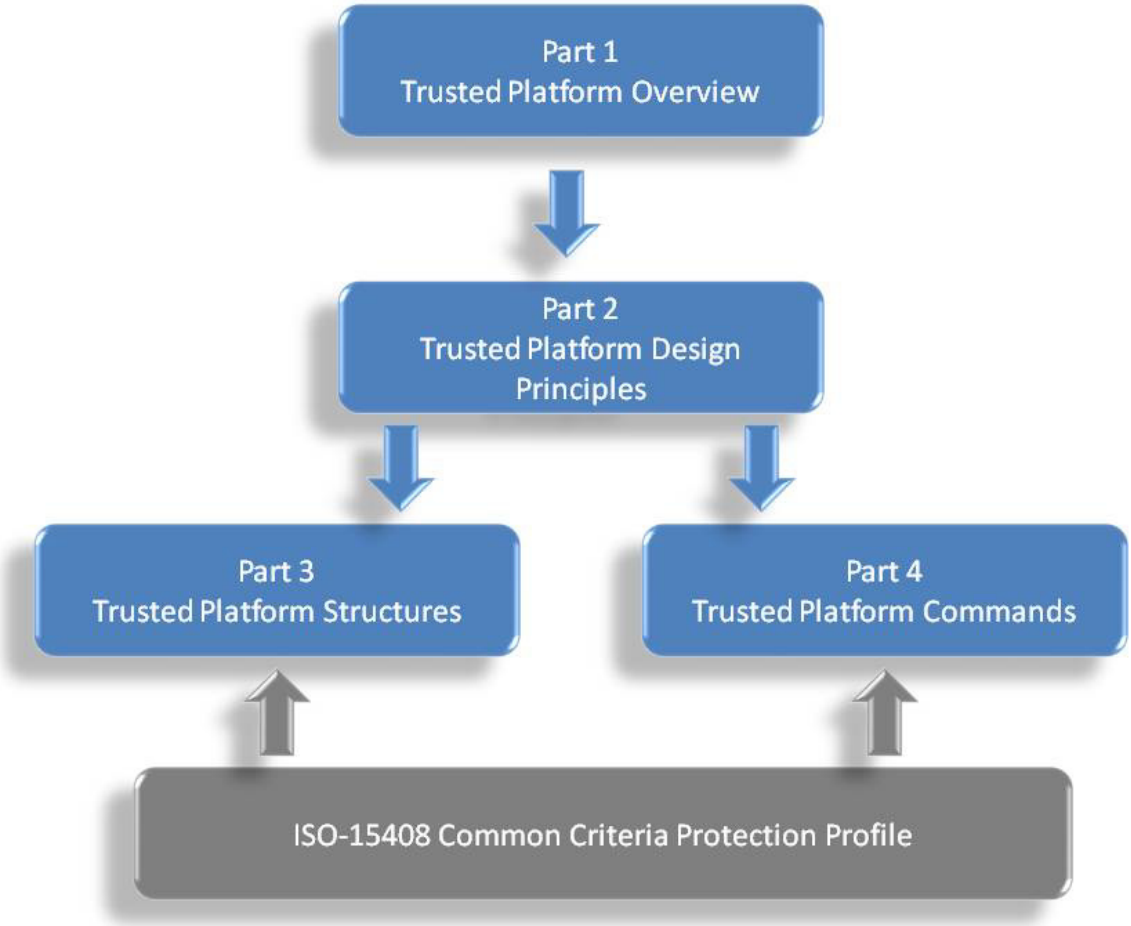

Figure 1. TPM Main Specification Roadmap

Start of informative comment

ISO/IEC 11889 is from the Trusted Computing Group (TCG) Trusted Platform Module (TPM) specification 1.2 version 103. The part numbers for ISO/IEC 11889 and the TCG specification do not match. The reason is the inclusion of the Overview document that is not a member of the TCG part numbering. The mapping between the two is as follows:

ISO Reference	TCG Reference
Part 1 Overview	Not published
Part 2 Design Principles	Part 1 Design Principles
Part 3 Structures	Part 2 Structures
Part 4 Commands	Part 3 Commands

End of informative comment

Copyright International Organization for Standardization
Provided by IHS under license with ISO
No reproduction or networking permitted without license from IHS
Not for Resale
© ISO/IEC 2009 – All rights reserved

Information technology — Trusted Platform Module —

Part 2: Design principles

1. Scope

ISO/IEC 11889 defines the Trusted Platform Module (TPM), a device that enables trust in computing platforms in general. ISO/IEC 11889 is broken into parts to make the role of each document clear. Any version of the standard requires all parts to be a complete standard.

A TPM designer MUST be aware that for a complete definition of all requirements necessary to build a TPM, the designer MUST use the appropriate platform specific specification to understand all of the TPM requirements.

Part 2 defines the principles of TPM operation. The base operating modes, the algorithms and key choices, along with basic interoperability requirements make up the majority of the normative statements in part 2.

1.1 Key words

The key words “MUST,” “MUST NOT,” “REQUIRED,” “SHALL,” “SHALL NOT,” “SHOULD,” “SHOULD NOT,” “RECOMMENDED,” “MAY,” and “OPTIONAL” in this document’s normative statements are to be interpreted as described in RFC-2119, *Key words for use in RFCs to Indicate Requirement Levels.*

1.2 Statement Type

Please note a very important distinction between different sections of text throughout this document. You will encounter two distinctive kinds of text: informative comment and normative statements. Because most of the text in this specification will be of the kind normative statements, the authors have informally defined it as the default and, as such, have specifically called out text of the kind informative comment They have done this by flagging the beginning and end of each informative comment and highlighting its text in gray. This means that unless text is specifically marked as of the kind informative comment, you can consider it of the kind normative statements.

For example:

Start of informative comment

This is the first paragraph of 1–n paragraphs containing text of the kind *informative comment* ...

This is the second paragraph of text of the kind *informative comment* ...

This is the nth paragraph of text of the kind *informative comment* ...

To understand the standard the user must read the standard. (This use of MUST does not require any action).

End of informative comment

This is the first paragraph of one or more paragraphs (and/or sections) containing the text of the kind normative statements ...

To understand the standard the user MUST read the standard. (This use of MUST indicates a keyword usage and requires an action).

© ISO/IEC 2009 – All rights reserved

Copyright International Organization for Standardization
Provided by IHS under license with ISO
No reproduction or networking permitted without license from IHS
Not for Resale

2. Normative references

The following referenced documents are indispensable for the application of this document. For dated references, only the edition cited applies. For undated references, the latest edition of the referenced document (including any amendments) applies.

ISO/IEC 8825-1 | ITU-T X.690: Information technology – ASN.1 encoding rules: Specification of Basic Encoding Rules (BER), Canonical Encoding Rules (CER) and Distinguished Encoding Rules (DER)

ISO/IEC 10118-3, Information technology — Security techniques — Hash-functions — Part 3: Dedicated hash-functions, Clause 9, SHA-1

ISO/IEC 18033-3, Information technology — Security techniques — Encryption algorithms — Part 3, Block ciphers, Clause 5.1 AES

IEEE P1363, Institute of Electrical and Electronics Engineers: Standard Specifications For Public-Key Cryptography

IETF RFC 2104, Internet Engineering Task Force Request for Comments 2104: HMAC: Keyed-Hashing for Message Authentication

IETF RFC 2119, Internet Engineering Task Force Request for Comments 2119: Key words for use in RFCs to Indicate Requirement Levels

PKCS #1 Version 2.1, RSA Cryptography Standard. This document is superseded by P1363, except for section 7.2 that defines the V1.5 RSA signature scheme in use by the TPM.

© ISO/IEC 2009 – All rights reserved
Copyright International Organization for Standardization
Provided by IHS under license with ISO
No reproduction or networking permitted without license from IHS
Not for Resale

3. Abbreviated Terms

Abbreviation	Description
AACP	Asymmetric Authorization Change Protocol
ADCP	Authorization Data Change Protocol
ADIP	Authorization Data Insertion Protocol
AIK	Attestation Identity Key
AMC	Audit Monotonic Counter
APIP	Time-Phased Implementation Plan
AuthData	Authentication Data or Authorization Data, depending on the context
BCD	Binary Coded Decimal
BIOS	Basic Input/Output System
CA	Certification of Authority
CDI	Controlled Data Item
CMK	Cerifiable/Certified Migratable Keys
CRT	Chinese Remainder Theorem
CRTM	Core Root of Trust Measurement
CTR	Counter-mode encryption
DAA	Direct Autonomous Attestation
DIR	Data Integrity Register
DOS	Disk Operating System
DSA	Digital Signature Algorithm
DSAP	Delegate-Specific Authorization Protocol
ECB	Electronic Codebook Mode
EK	Endorsement Key
ET	ExecuteTransport or Entity Type
FIPS	Federal Information Processing Standard
GPIO	General Purpose I/O
HMAC	Hash Message Authentication Code
HW	Hardware Interface
IB	Internal Base
I/O	Input/Output
IV	Initialization Vector
KH	Key Handle
LEAP	Lightweight Extensible Authentication Protocol for wireless computer networks
LK	Loaded Key
LOM	Limited Operation Mode
LPC	Low Pin Count
LSB	Least Significant Byte
MA	Migration Authority/Authorization
MIDL	Microsoft Interface Definition Language
MSA	Migration Selection Authority
MSB	Most Significant Byte
NV	Non-volatile

© ISO/IEC 2009 – All rights reserved

Copyright International Organization for Standardization
Provided by IHS under license with ISO
No reproduction or networking permitted without license from IHS
Not for Resale

Abbreviation	Description
NVRAM	Non-Volatile Random Access Memory
OAEP	Optimal Asymmetric Encryption Padding
OEM	Original Equipment Manufacturer
OIAP	Object-Independent Authorization Protocol
OID	Object Identifier
OSAP	Object-Specific Authorization Protocol
PCR	Platform Configuration Register
PI	Personal Information
PII	Personally Identifiable Information
POST	Power On Self Test
PRIVEK	Private Endorsement Key
PRNG	Pseudo Random Number Generator
PSS	Probabilistic Signature Scheme
PUBEK	Public Endorsement Key
RNG	Random Number Generator
RSA	Algorithm for public-key cryptography. The letters R, S, and A represent the initials of the first public describers of the algorithm.
RTM	Release to Manufacturing/Ready to Market
RTR	Root of Trust for Reporting
RTS	Root of Trust for Storage
SHA	Secure Hash Algorithm
SRK	Storage Root Key
STF	Self Test Failed
TA	Time Authority
TBB	Threading Building Blocks
TCG	Trusted Computing Group
TCV	Tick Count Value
TIR	Tick Increment Rate
TIS	TPM Interface Specification
TNC	Trusted Network Connect
TOE	Target of Evaluation
TOS	Trusted Operating System
TPCA	Trusted Platform Computing Alliance
TPM	Trusted Platform Module
TPME	Trusted Platform Module Entity
TSC	Tick Stamp Counter
TSC_	TPM Software Connection, when used as a command prefix
TSN	Tick Session Name
TSR	Tick Stamp Reset
TSRB	TickStampReset for blob
TSS	TCG Software Stack
TTP	Trusted Third Party/Time-Triggered Protocol
TS	Tick Stamp
UTC	Universal Time Clock
VPN	Virtual Private Network

--`,,```,,,,````-`-`,,`,,`,`,,`---

Copyright International Organization for Standardization
Provided by IHS under license with ISO
No reproduction or networking permitted without license from IHS
Not for Resale
© ISO/IEC 2009 – All rights reserved

4. Conformance

4.1 Introduction

Start of informative comment

The Protection Profile in the Conformance part of the specification defines the threats that are resisted by a platform. This section, “Protection,” describes the properties of selected capabilities and selected data locations within a TPM that has a Protection Profile and has not been modified by physical means.

This section introduces the concept of protected capabilities and the concept of shielded locations for data. The ordinal set defined in part II and III is the set of protected capabilities. The data structures in part II define the shielded locations.

- A protected capability is one whose correct operation is necessary in order for the operation of the TPM Subsystem to be trusted.

- A shielded location is an area where data is protected against interference and prying, independent of its form.

ISO/IEC 11889 uses the concept of protected capabilities so as to distinguish platform capabilities that must be trustworthy. Trust in the TPM depends critically on the protected capabilities. Platform capabilities that are not protected capabilities must (of course) work properly if the TPM Subsystem is to function properly.

ISO/IEC 11889 uses the concept of shielded locations, rather than the concept of “shielded data.” While the concept of shielded data is intuitive, it is extraordinarily difficult to define because of the imprecise meaning of the word “data.” For example, consider data that is produced in a safe location and then moved into ordinary storage. It is the same data in both locations, but in one it is shielded data and in the other it is not. Also, data may not always exist in the same form. For example, it may exist as vulnerable plaintext, but also may sometimes be transformed into a logically protected form. This data continues to exist, but doesn't always need to be shielded data - the vulnerable form needs to be shielded data, but the logically protected form does not. If a specific form of data requires protection against interference or prying, it is therefore necessary to say “if the data-D exists, it must exist only in a shielded location.” A more concise expression is “the data-D must be extant only in a shielded location.”

Hence, if trust in the TPM Subsystem depends critically on access to certain data, that data should be extant only in a shielded location and accessible only to protected capabilities. When not in use, such data could be erased after conversion (using a protected capability) into another data structure. Unless the other data structure was defined as one that must be held in a shielded location, it need not be held in a shielded location.

End of informative comment

1. The data structures described in ISO/IEC 11889-3 MUST NOT be instantiated in a TPM, except as data in TPM_Shielded-Locations.
2. The ordinal set defined in ISO/IEC 11889-3 and ISO/IEC 11889-4 MUST NOT be instantiated in a TPM, except as TPM_Protected-Capabilities.
3. Functions MUST NOT be instantiated in a TPM as TPM_Protected-Capabilities if they do not appear in the ordinal set defined in ISO/IEC 11889-3 or ISO/IEC 11889-4

--`,,```,,,,````-`-`,,`,,`,`,,`---

© ISO/IEC 2009 – All rights reserved
Copyright International Organization for Standardization
Provided by IHS under license with ISO
No reproduction or networking permitted without license from IHS
Not for Resale

4.2 Threat

Start of informative comment

This section, “Threat,” defines the scope of the threats that must be considered when considering whether a platform facilitates subversion of capabilities and data in a platform.

The design and implementation of a platform determines the extent to which the platform facilitates subversion of capabilities and data within that platform. It is necessary to define the attacks that must be resisted by TPM_Shielded-Locations and TPM_Protected-Capabilities in that platform.

The ISO/IEC 11889 standard defines the attacks that are resisted by the TPM. These attacks must be considered when determining whether the integrity of TPM_Protected-Capabilities and data in TPM_Shielded-Locations can be damaged. These attacks must be considered when determining whether there is a backdoor method of obtaining access to TPM_Protected-Capabilities and data in TPM_Shielded-Locations. These attacks must be considered when determining whether TPM_Protected-Capabilities have undesirable side effects.

End of informative comment

1. For the purposes of the “Protection” section of the standard, the threats that MUST be considered when determining whether the TPM facilitates subversion of TPM_Protected-Capabilities or data in TPM_Shielded-Locations SHALL include
   a. The methods inherent in physical attacks that fail if the TPM complies with the “physical protection” requirements specified by ISO/IEC 11889
   b. All methods that require execution of instructions in a computing engine in the platform

4.3 Protection of functions

Start of informative comment

A TPM_Protected-Capability must be used to modify TPM_Protected-Capabilities. Other methods must not be allowed to modify TPM_Protected-Capabilities. Otherwise, the integrity of TPM_Protected-Capabilities is unknown.

End of informative comment

1. A TPM SHALL NOT facilitate the alteration of TPM_Protected-Capabilities, except by TPM_Protected-Capabilities.

4.4 Protection of information

Start of informative comment

TPM_Protected-Capabilities must provide the only means from outside the TPM to access information represented by data in TPM_Shielded-Locations. Otherwise, a rogue can reveal data in TPM_Shielded-Locations, or create a derivative of data from TPM_Shielded-Locations (in a way that maintains some or all of the information content of the data) and reveal the derivative.

End of informative comment

1. A TPM SHALL NOT export data that is dependent upon data structures described in part 3 of ISO/IEC 11889, other than via a TPM_Protected-Capability.

© ISO/IEC 2009 – All rights reserved
Copyright International Organization for Standardization
Provided by IHS under license with ISO
No reproduction or networking permitted without license from IHS
Not for Resale

4.5 Side effects

Start of informative comment

An implementation of a TPM_Protected-Capability must not disclose the contents of TPM_Shielded-Locations. The only exceptions are when such disclosure is inherent in the definition of the capability or in the methods used by the capability. For example, a capability might be designed specifically to reveal hidden data or might use cryptography and hence always be vulnerable to cryptanalysis. In such cases, some disclosure or risk of disclosure is inherent and cannot be avoided. Other forms of disclosure (by side effects, for example) must always be avoided.

End of informative comment

1. The implementation of a TPM_Protected-Capability in a TPM SHALL NOT facilitate the disclosure or the exposure of information represented by data in TPM-shielded–locations, except by means unavoidably inherent in the TPM definition.

4.6 Exceptions and clarifications

Start of informative comment

These exceptions to the blanket statements in the generic “protection” requirements (above) are fully compatible with the intended effect of those statements. These exceptions affect ISO/IEC 11889-data that is available as plain-text outside the TPM and ISO/IEC 11889-data that can be used without violating security or privacy. These exceptions are valuable because they approve use of TPM resources by vendor-specific commands in particular circumstances.

These clarifications to the blanket statements of the generic “protection” requirements (above) do not materially change the effect of those statements, but serve to approve specific legitimate interpretations of the requirements.

End of informative comment

1. A Shielded Location is a place (memory, register, etc.) where data is protected against interference and exposure, independent of its form
2. A TPM_Protected-Capability is an operation defined in and restricted to those identified in part 3 and 4 of ISO/IEC 11889
3. A vendor specific command or capability MAY use the standard ISO/IEC 11889 owner/operator authorization mechanism
4. A vendor specific command or capability MAY utilize a TPM_PUBKEY structure stored on the TPM so long as the usage of that TPM_PUBKEY structure is authorized using the standard ISO/IEC 11889 authorization mechanism.
5. A vendor specific command or capability MAY use a sequence of standard ISO/IEC 11889 commands. The command MUST propagate the locality used for the call to the used ISO/IEC 11889 commands or capabilities, or set locality to 0.
6. A vendor specific command or capability that takes advantage of exceptions and clarifications to the “protection” requirements MUST be defined as part of the security target of the TPM. Such a vendor specific command or capability MUST be evaluated to meet the Platform Specific TPM and System Security Targets.
7. If a TPM employs vendor-specific cipher-text that is protected against subversion to the same or greater extent as internal TPM-resources stored outside the TPM with ISO/IEC 11889-defined methods, that vendor-specific cipher-text does not necessarily require protection from physical attack. If a TPM location stores only vendor-specific cipher-text that does not require protection from physical attack, that location can be ignored when determining whether the TPM complies with the "physical protection" requirements specified by ISO/IEC 11889.

© ISO/IEC 2009 – All rights reserved
Copyright International Organization for Standardization
Provided by IHS under license with ISO
No reproduction or networking permitted without license from IHS
Not for Resale

5. TPM Architecture

5.1 Interoperability

Start of informative comment

The TPM supports a minimum set of algorithms and operations to meet ISO/IEC 11889 standard.

Algorithms

RSA, normative statements in section 5.2.2.1

SHA-1, normative statements in section 5.2.6

HMAC, normative statements in section 5.2.4

The algorithms and protocols are the minimum that the TPM supports. Additional algorithms and protocols may be available to the TPM. All algorithms and protocols available in the TPM would be included in the TPM and platform credential.

The reason to specify these algorithms is two fold. The first is to know and understand the security properties of selected algorithms; identify appropriate key sizes and ensure appropriate use in protocols. The second reason is to define a base level of algorithms for interoperability.

End of informative comment

5.2 Components

Start of informative comment

The following is a block diagram Figure 5:a shows the major components of a TPM.

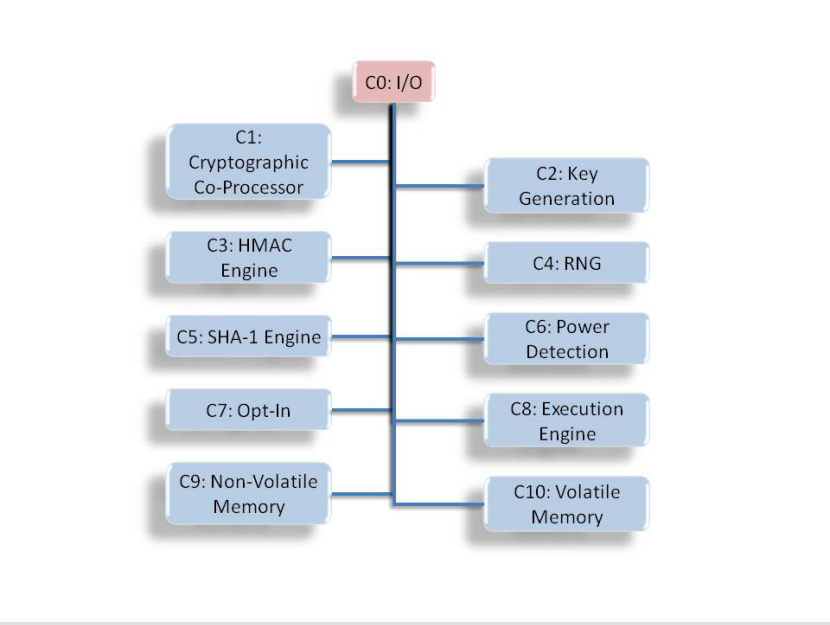

Figure 5:a - TPM Component Architecture

End of informative comment

--`,,```,,,,````-`-`,,`,,`,`,,`---

Copyright International Organization for Standardization
Provided by IHS under license with ISO
No reproduction or networking permitted without license from IHS
© ISO/IEC 2009 – All rights reserved
Not for Resale

5.2.1 Input and Output

Start of informative comment

The I/O component, Figure 5:a C0, manages information flow over the communications bus. It performs protocol encoding/decoding suitable for communication over external and internal buses. It routes messages to appropriate components. The I/O component enforces access policies associated with the Opt-In component as well as other TPM functions requiring access control.

ISO/IEC 11889 does not require a specific I/O bus. Issues around a particular I/O bus are the purview of a platform specific specification.

End of informative comment

1. The number of incoming operand parameter bytes must exactly match the requirements of the command ordinal. If the command contains more or fewer bytes than required, the TPM MUST return TPM_BAD_PARAMETER.

5.2.2 Cryptographic Co-Processor

Start of informative comment

The cryptographic co-processor, Figure 5:a C1, implements cryptographic operations within the TPM. The TPM employs conventional cryptographic operations in conventional ways. Those operations include the following:

Asymmetric key generation (RSA)

Asymmetric encryption/decryption (RSA)

Hashing (SHA-1)

Random number generation (RNG)

The TPM uses these capabilities to perform generation of random data, generation of asymmetric keys, signing and confidentiality of stored data.

The TPM may symmetric encryption for internal TPM use but does not expose any symmetric algorithm functions to general users of the TPM.

The TPM may implement additional asymmetric algorithms. TPM devices that implement different algorithms may have different algorithms perform the signing and wrapping.

If the TPM uses RSA with the required key length (2048 bits for storage keys), the output of all commands for key or data blob generation (e.g., TPM_CreateWrapKey, TPM_Seal, TPM_Sealx, TPM_MakeIdentity) consists of only one block. However, if the TPM uses other asymmetric algorithms that result in more than one output block for these commands, the integrity of the blobs must be protected by the TPM (by means of appropriate chaining mechanisms).

End of informative comment

1. The TPM MAY implement other asymmetric algorithms such as DSA or elliptic curve.
    a. These algorithms may be in use for wrapping, signatures and other operations. There is no guarantee that these keys can migrate to other TPM devices or that other TPM devices will accept signatures from these additional algorithms.
    b. If the output key or data blob generated with a storage key consists of more than one block, the TPM MUST protect the integrity of the blob by means of appropriate chaining mechanisms.
2. All storage keys MUST be of strength equivalent to a 2048 bits RSA key or greater. The TPM SHALL NOT load a storage key whose strength less than that of a 2048 bits RSA key.
3. All AIK MUST be of strength equivalent to a 2048 bits RSA key, or greater.

--`,,```,,,,````-`-`,,`,,`,`,,`---

© ISO/IEC 2009 – All rights reserved

Copyright International Organization for Standardization
Provided by IHS under license with ISO
No reproduction or networking permitted without license from IHS
Not for Resale

5.2.2.1 RSA Engine

Start of informative comment

The RSA asymmetric algorithm is used for digital signatures and for encryption.

For RSA keys the P1363 standard provides the implementation details for digital signature, encryption and data formats.

There is no requirement concerning how the RSA algorithm is to be implemented. TPM manufacturers may use Chinese Remainder Theorem (CRT) implementations or any other method. Designers should review P1363 for guidance on RSA implementations.

ISO/IEC 11889 retains support for 512-bit keys only for the purposes of backwards compatibility with legacy applications.

End of informative comment

1. The TPM MUST support RSA.
2. The TPM MUST use the RSA algorithm for encryption and digital signatures.
3. The TPM MUST support key sizes of 512, 1024, and 2048 bits. The TPM MAY support other key sizes.
   a. The minimum RECOMMENDED key size is 2048 bits.
4. The RSA public exponent MUST be e, where $e = 2^{16}+1$.
5. TPM devices that use CRT as the RSA implementation MUST provide protection and detection of failures during the CRT process to avoid attacks on the private key.

5.2.2.2 Signature Operations

Start of informative comment

The TPM performs signatures on both internal items and on requested external blobs. The rules for signatures apply to both operations.

End of informative comment

1. The TPM MUST use the RSA algorithm for signature operations where signed data is verified by entities other than the TPM that performed the sign operation.
2. The TPM MAY use other asymmetric algorithms for signatures; however, there is no requirement that other TPM devices either accept or verify those signatures.
3. The TPM MUST use P1363 for the format and design of the signature output.

5.2.2.3 Symmetric Encryption Engine

Start of informative comment

The TPM uses symmetric encryption to encrypt authentication information, provide confidentiality in transport sessions and provide internal encryption of blobs stored off the TPM.

For authentication and transport sessions, the mandatory mechanism is a pseudo one-time-pad with XOR. The mechanism to generate the one-time-pad is MGF1 and the nonces from the session protocol. When encrypting authorization data, the authorization data and the nonces are the same size, 20 bytes, so a direct XOR is possible.

For transport sessions the size of data is larger than the nonces so there needs to be a mechanism to expand the entropy to the size of the data. The mechanism to expand the entropy is the MGF1 function from P1363. This function provides a known mechanism that does not lower the entropy of the nonces.

--`,,```,,,,````-`-`,,`,,`,`,,`---
© ISO/IEC 2009 – All rights reserved
Copyright International Organization for Standardization
Provided by IHS under license with ISO
No reproduction or networking permitted without license from IHS
Not for Resale

AES may be supported as an alternate symmetric key encryption algorithm. The mode of use for AES in the TPM is counter mode and the actions for an operation define what the starting counter value is.

Internal protection of information can use any symmetric algorithm that the TPM designer feels provides the proper level of protection.

The TPM does not expose any of the symmetric operations for general message encryption.

End of informative comment

5.2.2.4 Using Keys

Start of Informative comments:

Keys can be symmetric or asymmetric.

As the TPM does not have an exposed symmetric algorithm, the TPM is only a generator, storage device and protector of symmetric keys. Generation of the symmetric key would use the TPM RNG. Storage and protection of the symmetric key would be provided by the BIND and SEAL capabilities of the TPM. If the caller wants to ensure that the release of a symmetric key is not exposed after UNBIND/UNSEAL on delivery to the caller, the caller should use a transport session with confidentiality set.

For asymmetric algorithms, the TPM generates and operates on RSA keys. The keys can be held only by the TPM or in conjunction with the caller of the TPM. If the private portion of a key is in use outside of the TPM it is the responsibility of the caller and user of that key to ensure the protections of the key.

The TPM has provisions to indicate if a key is held exclusively for the TPM or can be shared with entities off of the TPM.

End of informative comments.

1. A secret key is a key that is a private asymmetric key or a symmetric key.
2. Data SHOULD NOT be used as a secret key by a TPM_Protected-Capability unless that data has been extant only in a shielded location.
3. A key generated by a TPM_Protected-Capability SHALL NOT be used as a secret key unless that key has been extant only in a shielded location.
4. A secret key obtained by a TPM_Protected-Capability from a Protected Storage blob SHALL be extant only in a shielded location.

5.2.3 Key Generation

Start of informative comment

The Key Generation component, Figure 5:a C2, creates RSA key pairs and symmetric keys. ISO/IEC 11889 places no minimum requirements on key generation times for asymmetric or symmetric keys.

End of informative comment

© ISO/IEC 2009 – All rights reserved

Copyright International Organization for Standardization
Provided by IHS under license with ISO
No reproduction or networking permitted without license from IHS
Not for Resale

5.2.3.1 Asymmetric – RSA

The TPM MUST generate asymmetric key pairs. The generate function is a protected capability and the private key is held in a shielded location. The implementation of the generate function MUST be in accordance with P1363.

The prime-number testing for the RSA algorithm MUST use the definitions of P1363. If additional asymmetric algorithms are available, they MUST use the definitions from P1363 for the underlying basis of the asymmetric key (for example, elliptic curve fitting).

5.2.3.2 Nonce Creation

The creation of all nonce values MUST use the next n bits from the TPM RNG.

5.2.4 HMAC Engine

Start of informative comment

The HMAC engine, Figure 5:a C3, provides two pieces of information to the TPM: proof of knowledge of the AuthData and proof that the request arriving is authorized and has no modifications made to the command in transit.

The HMAC definition is for the HMAC calculation only. It does not specify the order or mechanism that transports the data from caller to actual TPM.

The creation of the HMAC is order dependent. Each command has specific items that are portions of the HMAC calculation. The actual calculation starts with the definition from RFC 2104.

RFC 2104 requires the selection of two parameters to properly define the HMAC in use. These values are the key length and the block size. ISO/IEC 11889 will use a key length of 20 bytes and a block size of 64 bytes. These values are known in the RFC as K for the key length and B as the block size.

The basic construct is

H(K XOR opad, H(K XOR ipad, text))

where

H = the SHA1 hash operation

K = the key or the AuthData

XOR = the xor operation

opad = the byte 0x5C repeated B times

B = the block length

ipad = the byte 0x36 repeated B times

text = the message information and any parameters from the command

End of informative comment

The TPM MUST support the calculation of an HMAC according to RFC 2104.

The size of the key (K in RFC 2104) MUST be 20 bytes. The block size (B in RFC 2104) MUST be 64 bytes.

The order of the parameters is critical to the TPM's ability to recreate the HMAC. Not all of the fields are sent on the wire for each command for instance only one of the nonce values travels on the wire. Each command interface definition indicates what parameters are involved in the HMAC calculation.

© ISO/IEC 2009 – All rights reserved
Copyright International Organization for Standardization
Provided by IHS under license with ISO
No reproduction or networking permitted without license from IHS
Not for Resale

5.2.5 Random Number Generator

Start of informative comment

The Random Number Generator (RNG) component, Figure 6:a C4 is the source of randomness in the TPM. The TPM uses these random values for nonces, key generation, and randomness in signatures.

The RNG consists of a state-machine that accepts and mixes unpredictable data and a post-processor that has a one-way function (e.g. SHA-1). The idea behind the design is that a TPM can be good source of randomness without having to require a genuine source of hardware entropy.

The state-machine can have a non-volatile state initialized with unpredictable random data during TPM manufacturing before delivery of the TPM to the customers. The state-machine can accept, at any time, further (unpredictable) data, or entropy, to salt the random number. Such data comes from hardware or software sources – for example; from thermal noise, or by monitoring random keyboard strokes or mouse movements. The RNG requires a reseeding after each reset of the TPM. A true hardware source of entropy is likely to supply entropy at a higher baud rate than a software source.

When adding entropy to the state-machine, the process must ensure that after the addition, no outside source can gain any visibility into the new state of the state-machine. Neither the Owner of the TPM nor the manufacturer of the TPM can deduce the state of the state-machine after shipment of the TPM. The RNG post-processor condenses the output of the state-machine into data that has sufficient and uniform entropy. The one-way function should use more bits of input data than it produces as output.

Our definition of the RNG allows implementation of a Pseudo Random Number Generator (PRNG) algorithm. However, on devices where a hardware source of entropy is available, a PRNG need not be implemented. ISO/IEC 11889 refers to both RNG and PRNG implementations as the RNG mechanism. From a user standpoint, the difference between a RNG and a PRNG is nonexistent. However, from a designer standpoint the difference between an RNG and PRNG will dictate various implementation choices. The ISO/IEC 11889 specification does not distinguish between the two types as the specification does not deal with implementation issues.

The TPM should be able to provide 32 bytes of randomness on each call. Larger requests may fail with not enough randomness being available.

End of informative comment

1. The RNG for the TPM will consist of the following components:
   a. Entropy source and collector
   b. State register
   c. Mixing function
2. The RNG capability is a TPM_Protected-Capability with no access control.
3. The RNG output may or may not be shielded data. When the data is for internal use by the TPM (e.g., generation of tpmProof or an asymmetric key), the data MUST be held in a shielded location. The RNG output for internal use MUST not be known outside the TPM. In particular, it MUST not be known by the TPM manufacturer. When the data is for use by the TSS or another external caller, the data is not shielded.

--`,,```,,,,````-`-`,,`,,`,`,,`---
© ISO/IEC 2009 – All rights reserved
Copyright International Organization for Standardization
Provided by IHS under license with ISO
No reproduction or networking permitted without license from IHS
Not for Resale

5.2.5.1 Entropy Source and Collector

Start of informative comment

The entropy source is the process or processes that provide entropy. These types of sources could include noise, clock variations, air movement, and other types of events.

The entropy collector is the process that collects the entropy, removes bias, and smoothes the output. The collector differs from the mixing function in that the collector may have special code to handle any bias or skewing of the raw entropy data. For instance, if the entropy source has a bias of creating 60 percent 1s and only 40 percent 0s, then the collector design takes that bias into account before sending the information to the state register.

End of informative comment

1. The entropy source MUST provide entropy to the state register in a manner that provides entropy that is not visible to an outside process.
    a. For compliance purposes, the entropy source MAY be outside of the TPM; however, attention MUST be paid to the reporting mechanism.
2. The entropy source MUST provide the information only to the state register.
    a. The entropy source may provide information that has a bias, so the entropy collector must remove the bias before updating the state register. The bias removal could use the mixing function or a function specifically designed to handle the bias of the entropy source.
    b. The entropy source can be a single device (such as hardware noise) or a combination of events (such as disk timings). It is the responsibility of the entropy collector to update the state register whenever the collector has additional entropy.

5.2.5.2 State Register

Start of informative comment

The state register implementation may use two registers: a non-volatile register rngState and a volatile register. The TPM loads the volatile register from the non-volatile register on startup. Each subsequent change to the state register from either the entropy source or the mixing function affects the volatile state register. The TPM saves the current value of the volatile state register to the non-volatile register on TPM power-down. The TPM may update the non-volatile register at any other time. The reasons for using two registers are:

To handle an implementation in which the non-volatile register is in a flash device;

To avoid overuse of the flash, as the number of writes to a flash device are limited.

End of informative comment

1. The state register is in a TPM shielded-location.
    a. The state register MUST be non-volatile.
    b. The update function to the state register is a TPM protected-capability.
    c. The primary input to the update function SHOULD be the entropy collector.
2. If the current value of the state register is unknown, calls made to the update function with known data MUST NOT result in the state register ending up in a state that an attacker could know.
    a. This requirement implies that the addition of known data MUST NOT result in a decrease in the entropy of the state register.
3. The TPM MUST NOT export the state register.

© ISO/IEC 2009 – All rights reserved
Copyright International Organization for Standardization
Provided by IHS under license with ISO
No reproduction or networking permitted without license from IHS
Not for Resale

5.2.5.3 Mixing Function

Start of informative comment

The mixing function takes the state register and produces output. The mixing function is a TPM protected-capability. The mixing function takes the value from a state register and creates the RNG output. If the entropy source has a bias, then the collector takes that bias into account before sending the information to the state register.

End of informative comment

1. Each use of the mixing function MUST affect the state register.
    a. This requirement is to affect the volatile register and does not need to affect the non-volatile state register.

5.2.5.4 RNG Reset

Start of informative comment

The resetting of the RNG occurs at least in response to a loss of power to the device.

These tests prove only that the RNG is still operating properly; they do not prove how much entropy is in the state register. This is why the self-test checks only after the load of previous state and may occur before the addition of more entropy.

End of informative comment

1. The RNG MUST NOT output any bits after a system reset until the following occurs:
    a. The entropy collector performs an update on the state register. This does not include the adding of the previous state but requires at least one bit of entropy.
    b. The mixing function performs a self-test. This self-test MUST occur after the loading of the previous state. It MAY occur before the entropy collector performs the first update.

5.2.6 SHA-1 Engine

Start of informative comment

The SHA-1, Figure 5:a C5, hash capability is primarily used by the TPM, as it is a trusted implementation of a hash algorithm. The hash interfaces are exposed outside the TPM to support Measurement taking during platform boot phases and to allow environments that have limited capabilities access to a hash functions. The TPM is not a cryptographic accelerator. ISO/IEC 11889 does not specify minimum throughput requirements for TPM hash services.

End of informative comment

1. The TPM MUST implement the SHA-1 hash algorithm as defined by ISO/IEC 10118-3, Clause 9.
2. The output of SHA-1 is 160 bits and all areas that expect a hash value are REQUIRED to support the full 160 bits.
3. The only commands that SHALL be presented to the TPM in-between a TPM_SHA1Start command and a TPM_SHA1Complete command SHALL be a variable number (possibly 0) of TPM_SHA1Update commands.
    a. The TPM_SHA1Update commands can occur in a transport session.
4. Throughout all parts of the specification the characters x1 || x2 imply the concatenation of x1 and x2

© ISO/IEC 2009 All rights reserved

Copyright International Organization for Standardization
Provided by IHS under license with ISO
No reproduction or networking permitted without license from IHS
Not for Resale

5.2.7 Power Detection

Start of informative comment

The power detection component, Figure 5:a C6, manages the TPM power states in conjunction with platform power states. ISO/IEC 11889 requires that the TPM be notified of all power state changes.

Power detection also supports physical presence assertions. The TPM may restrict command-execution during periods when the operation of the platform is physically constrained. In a PC, operational constraints occur during the power-on self-test (POST) and require Operator input via the keyboard. The TPM might allow access to certain commands while in a constrained execution mode or boot state. At some critical point in the POST process, the TPM may be notified of state changes that affect TPM command processing modes.

End of informative comment

5.2.8 Opt-In

Start of informative comment

The Opt-In component, Figure 5:a C7, provides mechanisms and protections to allow the TPM to be turned on/off, enabled/disabled, activated/deactivated. The Opt-In component maintains the state of persistent and volatile flags and enforces the semantics associated with these flags.

The setting of flags requires either authorization by the TPM Owner or the assertion of physical presence at the platform. The platform's manufacturer determines the techniques used to represent physical-presence. The guiding principle is that no remote entity should be able to change TPM status without either knowledge of the TPM Owner or the Operator is physically present at the platform. Physical presence may be asserted during a period when platform operation is constrained such as power-up.

Non-Volatile Flags:

PhysicalPresenceLifetimeLock

PhysicalPresenceHWEnable

PhysicalPresenceCMDEnable

Volatile Flags:

PhysicalPresenceV

The following truth table explains the conditions in which the PhysicalPresenceV flag may be altered:

Persistent / Volatile	P	P	P	V	
Control Flags	PhysicalPresenceLifetimeLock	PhysicalPresenceHWEnable	PhysicalPresenceCMDEnable	PhysicalPresenceV	
Volatile Access Semantics to Physical Presence Flag	-	F	F	-	No access to PhysicalPresenceV flag.
	-	F	T	T	
	-	-	T	F	Access to PhysicalPresenceV flag through TCS_PhysicalPresence command enabled.
	-	T	-	-	Access to PhysicalPresenceV flag through hardware signal enabled.
	-	T	T	F	Access to PhysicalPresenceV flag through hardware signal or TCS_PhysicalPresence command enabled.

© ISO/IEC 2009 – All rights reserved
Copyright International Organization for Standardization
Provided by IHS under license with ISO
No reproduction or networking permitted without license from IHS
Not for Resale

Persistent / Volatile	P	P	P	V	
Control Flags	PhysicalPresenceLifetimeLock	PhysicalPresenceHWEnable	PhysicalPresenceCMDEnable	PhysicalPresenceV	
Persistent Access Semantics to Physical Presence Flag	T	F	F	-	Access to PhysicalPresenceV flag permanently disabled.
	T	F	T	T	
	T	F	T	F	Exclusive access to PhysicalPresenceV flag through TCS_PhysicalPresence command permanently enabled.
	T	T	F	-	Exclusive access to PhysicalPresenceV flag through hardware signal permanently enabled.
	T	T	T	F	Access to PhysicalPresenceV flag through hardware signal or TCS_PhysicalPresence command permanently enabled.

Table 5:a - Physical Presence Semantics

ISO/IEC 11889 also recognizes the concept of unambiguous physical presence. Conceptually, the use of dedicated electrical hardware providing a trusted path to the Operator has higher precedence than the physicalPresenceV flag value. Unambiguous physical presence may be used to override physicalPresenceV flag value under conditions specified by platform specific design considerations.

Additional details relating to physical presence can be found in sections on Volatile and Non-volatile memory.

End of informative comment

5.2.9 Execution Engine

Start of informative comment

The execution engine, Figure 5:a C8, runs program code to execute the TPM commands received from the I/O port. The execution engine is a vital component in ensuring that operations are properly segregated and shield locations are protected.

End of informative comment

5.2.10 Non-Volatile Memory

Start of informative comment

Non-volatile memory component, Figure 5:a C9, is used to store persistent identity and state associated with the TPM. The NV area has set items (like the EK) and also is available for allocation and use by entities authorized by the TPM Owner.

The TPM designer should consider the use model of the TPM and if the use of NV storage is a concern. NV storage does have a limited life and using the NV storage in a high volume use model may prematurely wear out the TPM.

End of informative comment

© ISO/IEC 2009 All rights reserved

Copyright International Organization for Standardization
Provided by IHS under license with ISO
No reproduction or networking permitted without license from IHS
Not for Resale

5.3 Data Integrity Register (DIR)

Start of informative comment

The DIR were a version 1.1 function. They provided a place to store information using the TPM NV storage.

In 1.2 the DIR are deprecated and the use of the DIR should move to the general purpose NV storage area.

The TPM must still support the functionality of the DIR register in the NV storage area.

End of informative comment

1. A TPM MUST provide one Data Integrity Register (DIR)
   a. The TPM DIR commands are deprecated in 1.2
   b. The TPM MUST reserve the space for one DIR in the NV storage area
   c. The TPM MAY have more than 1 DIR.
2. The DIR MUST be 160-bit values and MUST be held in TPM shielded-locations.
3. The DIR MUST be non-volatile (values are maintained during the power-off state).
   a. A TPM implementation need not provide the same number of DIRs as PCRs.

5.4 Platform Configuration Register (PCR)

Start of informative comment

A Platform Configuration Register (PCR) is a 160-bit storage location for discrete integrity measurements. There are a minimum of 16 PCR registers. All PCR registers are shielded-locations and are inside of the TPM. The decision of whether a PCR contains a standard measurement or if the PCR is available for general use is deferred to the platform specific specification.

A large number of integrity metrics may be measured in a platform, and a particular integrity metric may change with time and a new value may need to be stored. It is difficult to authenticate the source of measurement of integrity metrics, and as a result a new value of an integrity metric cannot be permitted to simply overwrite an existing value. (A rogue could erase an existing value that indicates subversion and replace it with a benign value.) Thus, if values of integrity metrics are individually stored, and updates of integrity metrics must be individually stored, it is difficult to place an upper bound on the size of memory that is required to store integrity metrics.

The PCR is designed to hold an unlimited number of measurements in the register. It does this by using a cryptographic hash and hashing all updates to a PCR. The pseudo code for this is:

PCRi New = HASH (PCRi Old value || value to add)

There are two salient properties of cryptographic hash that relate to PCR construction. Ordering – meaning updates to PCRs are not commutative. For example, measuring (A then B) is not the same as measuring (B then A).

The other hash property is one-way-ness. This property means it should be computationally infeasible for an attacker to determine the input message given a PCR value. Furthermore, subsequent updates to a PCR cannot be determined without knowledge of the previous PCR values or all previous input messages provided to a PCR register since the last reset.

End of informative comment

© ISO/IEC 2009 – All rights reserved
Copyright International Organization for Standardization
Provided by IHS under license with ISO
No reproduction or networking permitted without license from IHS
Not for Resale

1. The PCR MUST be a 160-bit field that holds a cumulatively updated hash value
2. The PCR MUST have a status field associated with it
3. The PCR MUST be in the RTS and should be in volatile storage
4. The PCR MUST allow for an unlimited number of measurements to be stored in the PCR
5. The PCR MUST preserve the ordering of measurements presented to it
6. A PCR MUST be set to the default value as specified by the PCRReset attribute
7. A TPM implementation MUST provide 16 or more independent PCRs. These PCRs are identified by index and MUST be numbered from 0 (that is, PCR0 through PCR15 are required for ISO/IEC 11889 compliance). Vendors MAY implement more registers for general-purpose use. Extra registers MUST be numbered contiguously from 16 up to max – 1, where max is the maximum offered by the TPM.
8. The ISO/IEC 11889-protected capabilities that expose and modify the PCRs use a 32-bit index, indicating the maximum usable PCR index. However, ISO/IEC 11889 reserves register indices 230 and higher for later versions of the specification. A TPM implementation MUST NOT provide registers with indices greater than or equal to 230. In ISO/IEC 11889, the following terminology is used (although this internal format is not mandated).
9. The PSS MUST define at least define one measurement that the RTM MUST make and the PCR where the measurement is stored.
10. A ISO/IEC 11889 measurement agent MAY discard a duplicate event instead of incorporating it in a PCR, provided that:
11. A relevant ISO/IEC 11889 platform specification explicitly permits duplicates of this type of event to be discarded
12. The PCR already incorporates at least one event of this type
13. An event of this type previously incorporated into the PCR included a statement that duplicate such events may be discarded. This option could be used where frequent recording of sleep states will adversely affect the lifetime of a TPM, for example.
14. PCRs and the protected capabilities that operate upon them MAY NOT be used until power-on self-test (TPM POST) has completed. If TPM POST fails, the TPM_Extend operation will fail; and, of greater importance, the TPM_Quote operation and TPM_Seal operations that respectively report and examine the PCR contents MUST fail. At the successful completion of TPM POST, all PCRs MUST be set to their default value (either 0x00…00 or 0xFF…FF). Additionally, the UINT32 flags MUST be set to zero.

--`,,```,,,,````-`-`,,`,,`,`,,`---

© ISO/IEC 2009 – All rights reserved

Copyright International Organization for Standardization
Provided by IHS under license with ISO
No reproduction or networking permitted without license from IHS
Not for Resale

6. Endorsement Key Creation

Start of informative comment

The TPM contains a 2048-bit RSA key pair called the endorsement key (EK). The public portion of the key is the PUBEK and the private portion the PRIVEK. Due to the nature of this key pair, both the PUBEK and the PRIVEK have privacy and security concerns.

The TPM has the EK generated before the end customer receives the platform. The Trusted Platform Module Entity (TPME) that causes EK generation is also the entity that will create and sign the EK credential attesting to the validity of the TPM and the EK. The TPME is typically the TPM manufacturer.

The TPM can generate the EK internally using the TPM_CreateEndorsementKey or by using an outside key generator. The EK needs to indicate the genealogy of the EK generation.

Subsequent attempts to either generate an EK or insert an EK must fail.

If the data structure TPM_ENDORSEMENT_CREDENTIAL is stored on a platform after an Owner has taken ownership of that platform, it SHALL exist only in storage to which access is controlled and is available to authorized entities.

End of informative comment

1. The EK MUST be a 2048-bit RSA key
   a. The public portion of the key is the PUBEK
   b. The private portion of the key is the PRIVEK
   c. The PRIVEK SHALL exist only in a TPM_Shielded-Location.
2. Access to the PRIVEK and PUBEK MUST only be via TPM_Protected-Capabilities
   a. The protected capabilities MUST require TPM_Owner-Authentication or operator physical presence
3. The generation of the EK may use a process external to the TPM and TPM_CreateEndorsementKeyPair
   a. The external generation MUST result in an EK that has the same properties as an internally generated EK
   b. The external generation process MUST protect the EK from exposure during the generation and insertion of the EK
   c. After insertion of the EK the TPM state MUST be the same as the result of the TPM_CreateEndorsementKeyPair execution
   d. The process MUST guarantee correct generation, cryptographic strength, uniqueness, privacy, and installation into a genuine TPM, of the EK
   e. The entity that signs the EK credential MUST be satisfied that the generation process properly generated the EK and inserted it into the TPM
   f. The process MUST be defined in the target of evaluation (TOE) of the security target in use to evaluate the TPM

© ISO/IEC 2009 – All rights reserved
Copyright International Organization for Standardization
Provided by IHS under license with ISO
No reproduction or networking permitted without license from IHS
Not for Resale

6.1 Controlling Access to PRIVEK

Start of informative comment

Exposure of the PRIVEK is a security concern.

The TPM must ensure that the PRIVEK is not exposed outside of the TPM

End of informative comment

1. The PRIVEK MUST never be out of the control of a TPM_Shielded-Location

6.2 Controlling Access to PUBEK

Start of informative comment

There are no security concerns with exposure or use of the PUBEK.

Privacy guidelines suggest that PUBEK could be considered personally identifiable information (PII) if it were associated in some way with personal information (PI) or associated with other PII, but PUBEK alone cannot be considered PII. Arbitrary random numbers do not represent a threat to privacy unless further associated with PI or PII. The PUBEK is an arbitrary random number that may be associated with aggregate platform information, but not personally identifiable information.

An EK may become associated with personally identifiable information when an alias platform identifier (AIK) is also associated with PI. The attestation service could include personal information in the AIK credential, thereby making the AIK-PUBEK association PII – but not before.

The association of PUBEK with AIK therefore is important to protect via privacy guidelines. The owner/user of the TPM should be able to control whether PUBEK is disclosed along with AIK. The owner/user should be notified of personal information that might be added to an AIK credential, which could result in AIK being considered PII. The owner/user should be able to evaluate the mechanisms used by an attestation entity to protect PUBEK-AIK associations before disclosure occurs. No other entity should be privy to owner/user authorized disclosure besides the intended attestation entity.

Several commands may be used to negotiate the conditions of PUBEK-AIK disclosure. TPM_MakeIdentity discloses PUBEK-AIK in the context of requesting an AIK credential. TPM_ActivateIdentity ensures the owner/user has not been spoofed by an interloper. These interfaces allow the owner/user to choose whether disclosure is acceptable and control the circumstances under which disclosure takes place. They do not allow the owner/user the ability to retain control of PUBEK-AIK subsequent to disclosure except by traditional means of trusting the attestation entity to abide by an acceptable privacy policy. The owner/user is able to associate the accepted privacy policy with the disclosure operation (e.g. TPM_MakeIdentity).

A persistent flag called readPubek can be set to TRUE to permit reading of PUBEK via TPM_ReadPubek. Reporting the PUBEK value is not considered privacy sensitive because it cannot be associated with any of the AIK keys managed by the TPM without using TPM protected-capabilities. Keys are encrypted with a nonce when flushed from TPM shielded-locations, Cryptanalysis of flushed keys will not reveal an association of EK to any AIK.

The command that manipulates the readPubek flag is TPM_DisablePubekRead.

End of informative comment

© ISO/IEC 2009 – All rights reserved

Copyright International Organization for Standardization
Provided by IHS under license with ISO
No reproduction or networking permitted without license from IHS
Not for Resale

7. Attestation Identity Keys

Start of informative comment

See 12.4 Attestation Identity Keys.

End of informative comment

© ISO/IEC 2009 – All rights reserved
Copyright International Organization for Standardization
Provided by IHS under license with ISO
No reproduction or networking permitted without license from IHS
Not for Resale

8. TPM Ownership

Start of informative comment

Taking ownership of a TPM is the process of inserting a shared secret into a TPM shielded-location. Any entity that knows the shared secret is a TPM Owner. Proof of ownership occurs when an entity, in response to a challenge, proves knowledge of the shared secret. Certain operations in the TPM require authentication from a TPM Owner.

Certain operations also allow the human, with physical possession of the platform, to assert TPM Ownership rights. When asserting TPM Ownership, using physical presence, the operations must not expose any secrets protected by the TPM.

The platform owner controls insertion of the shared secret into the TPM. The platform owner sets the NV persistent flag ownershipEnabled that allows the execution of the TPM_TakeOwnership command. The TPM_SetOwnerInstall, the command that controls the value ownershipEnabled, requires the assertion of physical presence.

Attempting to execute TPM_TakeOwnership fails when a TPM already has an owner. To remove an owner when the current TPM Owner is unable to remove themselves, the human that is in possession of the platform asserts physical presence and executes TPM_ForceClear which removes the shared secret.

The insertion protocol that supplies the shared secret has the following requirements: confidentiality, integrity, remoteness and verifiability.

To provide confidentiality the proposed TPM Owner encrypts the shared secret using the PUBEK. This requires the PRIVEK to decrypt the value. As the PRIVEK is only available in the TPM the encrypted shared secret is only available to the intended TPM.

The integrity of the process occurs by the TPM providing proof of the value of the shared secret inserted into the TPM.

By using the confidentiality and integrity, the protocol is useable by TPM Owners that are remote to the platform.

The new TPM Owner validates the insertion of the shared secret by using integrity response.

End of informative comment

The TPM MUST ship with no Owner installed. The TPM MUST use the ownership-control protocol (OIAP or OSAP)

8.1 Platform Ownership and Root of Trust for Storage

Start of informative comment

The semantics of platform ownership are tied to the Root-of-trust-for-storage (RTS). The TPM_TakeOwnership command creates a new Storage Root Key (SRK) and new tpmProof value whenever a new owner is established. It follows that objects owned by a previous owner will not be inherited by the new owner. Objects that should be inherited must be transferred by deliberate data migration actions.

End of informative comment

--`,,```,,,,````-`-`,,`,,`,`,,`---

© ISO/IEC 2009 – All rights reserved

Copyright International Organization for Standardization
Provided by IHS under license with ISO
No reproduction or networking permitted without license from IHS
Not for Resale

9. Authentication and Authorization Data

Start of informative comment

Using security vernacular the terms below apply to the TPM for this discussion:

Authentication: The process of providing proof of claimed ownership of an object or a subject's claimed identity.

Authorization: Granting a subject appropriate access to an object.

Each TPM object that does not allow "public" access contains a 160-bit shared secret. This shared secret is enveloped within the object itself. The TPM grants use of TPM objects based on the presentation of the matching 160-bits using protocols designed to provide protection of the shared secret. This shared secret is called the AuthData.

Neither the TPM, nor its objects (such as keys), contain access controls for its objects (the exception to this is what is provided by the delegation mechanism). If an subject presents the AuthData, that subject is granted full use of the object based on the object's capabilities, not a set of rights or permissions of the subject. This apparent overloading of the concepts of authentication and authorization has caused some confusion. This is caused by having two similarly rooted but distinct perspectives.

From the perspective of the TPM looking out, this AuthData is its sole mechanism for authenticating the owner of its objects, thus from its perspective it is authentication data. However, from the application's perspective this data is typically the result of other functions that might perform authentications or authorizations of subjects using higher level mechanisms such as OS login, file system access, etc. Here, AuthData is a result of these functions so in this usage, it authorizes access to the TPM's objects. From this perspective, i.e., the application looking in on the TPM and its objects, the AuthData is authorization data. For this reason, and thanks to a common root within the English language, the term for this data is chosen to be AuthData and is to be interpreted or expanded as either authentication data or authorization data depending on context and perspective.

The term AuthData refers to the 160-bit value used to either prove ownership of, or authorization to use, an object. This is also called the object's shared secret. The term authorization will be used when referring the combined action of verifying the AuthData and allowing access to the object or function. The term authorization session applies to a state where the AuthData has been authentication and a session handle established that is associated with that authentication.

A wide-range of objects use AuthData. It is used to establish platform ownership, key use restrictions, object migration and to apply access control to opaque objects protected by the TPM.

AuthData is a 160-bit shared-secret. The assumption is the shared-secret and some randomness are mixed using SHA-1 digesting, but no specific function for generating AuthData is specified by ISO/IEC 11889.

ISO/IEC 11889 command processing sessions (e.g. OSAP, ADIP) may use AuthData as an initialization vector when creating a one-time pad. Session encryption is used to encrypt portions of command messages exchanged between TPM and a caller.

The TPM stores AuthData with TPM controlled-objects and in shielded-locations. AuthData is never in the clear, when managed by the TPM except in shielded-locations. Only TPM protected-capabilities may access AuthData (contained in the TPM). AuthData objects may not be used for any other purpose besides authentication and authorization of TPM operations on controlled-objects.

Outside the TPM, a reference monitor of some kind is responsible for protecting AuthData. AuthData should be regarded as a controlled data item (CDI) in the context of the security model governing the reference monitor. ISO/IEC 11889 expects this entity to preserve the interests of the platform Owner.

There is no requirement that instances of AuthData be unique.

End of informative comment

© ISO/IEC 2009 – All rights reserved
Copyright International Organization for Standardization
Provided by IHS under license with ISO
No reproduction or networking permitted without license from IHS
Not for Resale

The TPM MUST reserve 160 bits for the AuthData. The TPM treats the AuthData as a blob. The TPM MUST keep AuthData in a shielded-location.

The TPM MUST enforce that the only usage in the TPM of the AuthData is to perform authorizations.

9.1 Dictionary Attack Considerations

Start of informative comment

The decision to provide protections against dictionary attacks is due to the inability of the TPM to guarantee that an authorization value has high entropy. While the creation and authorization protocols could change to support the assurance of high entropy values, the changes would be drastic and would totally invalidate any 1.x TPM version.

Version 1.1 explicitly avoided any requirements for dictionary attack mitigation.

Version 1.2 adds the requirement that the TPM vendor provide some assistance against dictionary attacks. The internal mechanism is vendor specific. The TPM designer should review the requirements for dictionary attack mitigation in the Common Criteria.

The 1.2 specification does not provide any functions to turn on the dictionary attack prevention. The specification does provide a way to reset from the TPM response to an attack.

To avoid all potential dictionary attacks the AuthData should be of high-entropy. If the AuthData is of low entropy, version 1.2 provides limited protection to the AuthData (see [ChenRyan08] L. Chen and M. D. Ryan, A solution for TCG TPM resistance to offline dictionary attacks on weak authorization data. Presented at *Future of Trust in Computing*, Berlin, 30 June – 2 July 2008]). The limited protection is the protection from online dictionary attacks described in this section.

By way of example, the following is a way to implement the dictionary attack mitigation.

The TPM keeps a count of failed authorization attempts. The vendor allows the TPM Owner to set a threshold of failed authorizations. When the count exceeds the threshold, the TPM locks up and does not respond to any requests for a time out period. The time out period doubles each time the count exceeds the threshold. If the TPM resets during a time out period, the time out period starts over after TPM_Init, or TPM_Startup. To reset the count and the time out period the TPM Owner executes TPM_ResetLockValue. If the authorization for TPM_ResetLockValue fails, the TPM must lock up for the entire time out period and no additional attempts at unlocking will be successful. Executing TPM_ResetLockValue when outside of a time out period still results in the resetting of the count and time out period.

End of informative comment

The TPM SHALL incorporate mechanism(s) that will provide some protection against exhaustive or dictionary attacks on the authorization values stored within the TPM.

This version of the TPM specification does NOT specify the particular strategy to be used. Some examples might include locking out the TPM after a certain number of failures, forcing a reboot under some combination of failures, or requiring specific actions on the part of some actors after an attack has been detected. The mechanisms to manage these strategies are vendor specific at this time.

If the TPM in response to the attacks locks up for some time period or requires a special operation to restart, the TPM MUST prevent any authorized TPM command and MAY prevent any TPM command from executing until the mitigation mechanism completes. The TPM Owner can reset the mechanism using the TPM_ResetLockValue command. TPM_ResetLockValue MUST be allowed to run exactly once while the TPM is locked up.

--`,,```,,,,````-`-`,,`,,`,`,,`---
© ISO/IEC 2009 – All rights reserved
Copyright International Organization for Standardization
Provided by IHS under license with ISO
No reproduction or networking permitted without license from IHS
Not for Resale

10. TPM Operation

Start of informative comment

Through the course of TPM operation, it may enter several operational modes that include power-up, self-test, administrative modes and full operation. This section describes TPM operational states and state transition criteria. Where applicable, the TPM commands used to facilitate state transition or function are included in diagrams and descriptions.

The TPM keeps the information relative to the TPM operational state in a combination of persistent and volatile flags. For ease of reading the persistent flags are prefixed by pFlags and the volatile flags prefixed by vFlags.

The following state diagram describes TPM operational states at a high level. Subsequent state diagrams drill-down to finer detail that describes fundamental operations, protections on operations and the transitions between them.

The state diagrams use the following notation:



- Signifies a state.

 - Transitions between states are represented as a single headed arrows.

 - Circular transitions indicate operations that don't result in a transition to another state.

 - Decision boxes split state flow based on a logical test. Decision conditions are called Guards and are identified by bracketed text.

< [text] > Bracketed text indicates transitions that are gated. Text within the brackets describes the pre-condition that must be met before state transition may occur.

< /name > Transitions may list the events that trigger state transition. The forward slash demarcates event names.

 - The starting point for reading state diagrams.

 - The ending point for state diagrams. Perpetual state systems may not have an ending indicator.

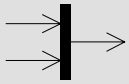 - The collection bar consolidates multiple identical transition events into a single transition arrow.

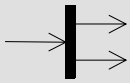 - The distribution bar splits transitions to flow into multiple states.



- The history indicator means state values are remembered across context switches or power-cycles.

End of informative comment

--`,,```,,,,````-`-`,,`,,`,`,,`---
© ISO/IEC 2009 – All rights reserved
Copyright International Organization for Standardization
Provided by IHS under license with ISO
No reproduction or networking permitted without license from IHS
Not for Resale

10.1 TPM Initialization & Operation State Flow

Start of informative comment

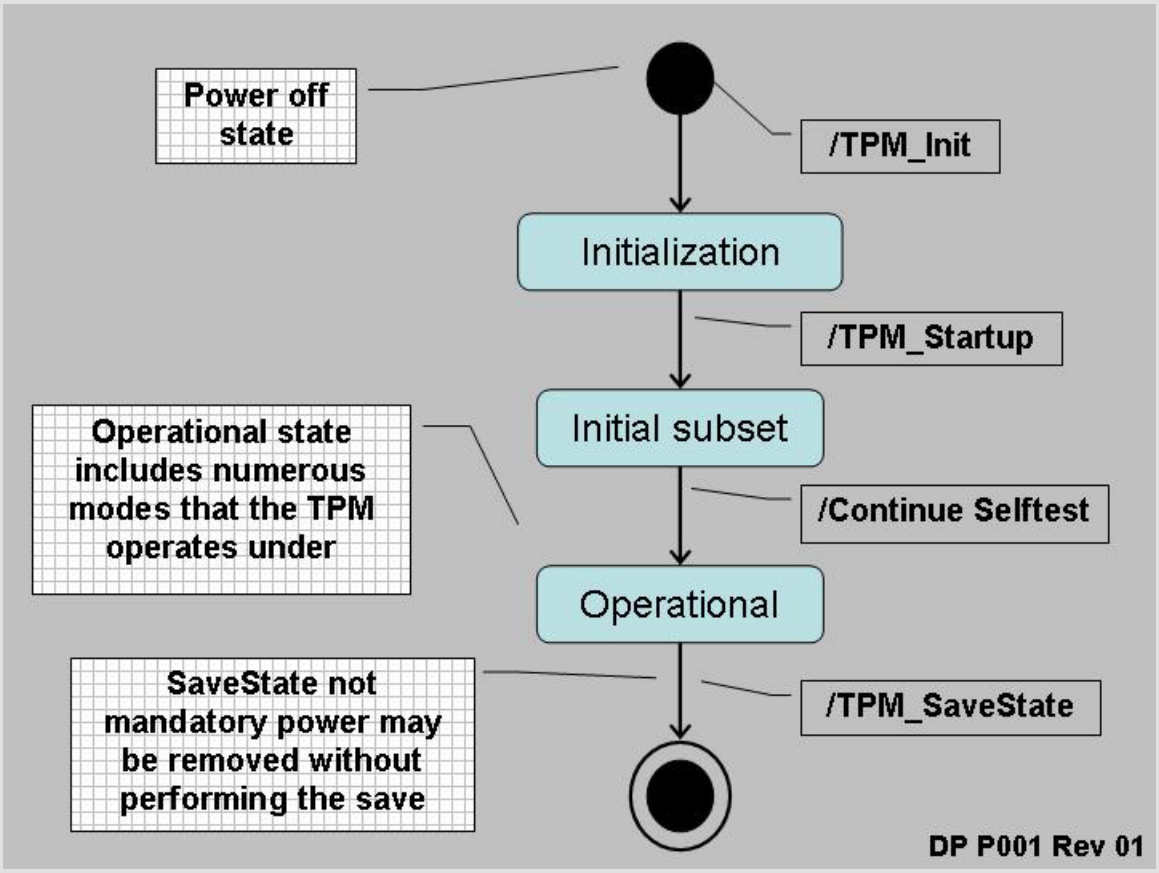

Figure 10:a - TPM Operational States

End of informative comment

10.1.1 Initialization

Start of informative comment

TPM_Init transitions the TPM from a power-off state to one where the TPM begins an initialization process. TPM_Init could be the result of power being applied to the platform or a hard reset.

TPM_Init sets an internal flag to indicate that the TPM is undergoing initialization. The TPM must complete initialization before it is operational. The completion of initialization requires the receipt of the TPM_Startup command.

The TPM is not fully operational until all of the self-tests are complete. Successful completion of the self-tests allows the TPM to enter fully operational mode.

Fully operational does not imply that all functions of the TPM are available. The TPM needs to have a TPM Owner and be enabled for all functions to be available.

The TPM transitions out of the operational mode by having power removed from the system. Prior to the exiting operational mode, the TPM prepares for the transition by executing the TPM_SaveState command. There is no requirement that TPM_SaveState execute before the transition to power-off mode occurs.

End of informative comment

1. After TPM_Init and until receipt of TPM_Startup the TPM MUST return TPM_INVALID_POSTINIT for all commands. Prior to receipt of TPM_Startup the TPM MAY enter shutdown or failure mode.

© ISO/IEC 2009 All rights reserved
Copyright International Organization for Standardization
Provided by IHS under license with ISO
No reproduction or networking permitted without license from IHS
Not for Resale

10.2 Self-Test Modes

Start of informative comment

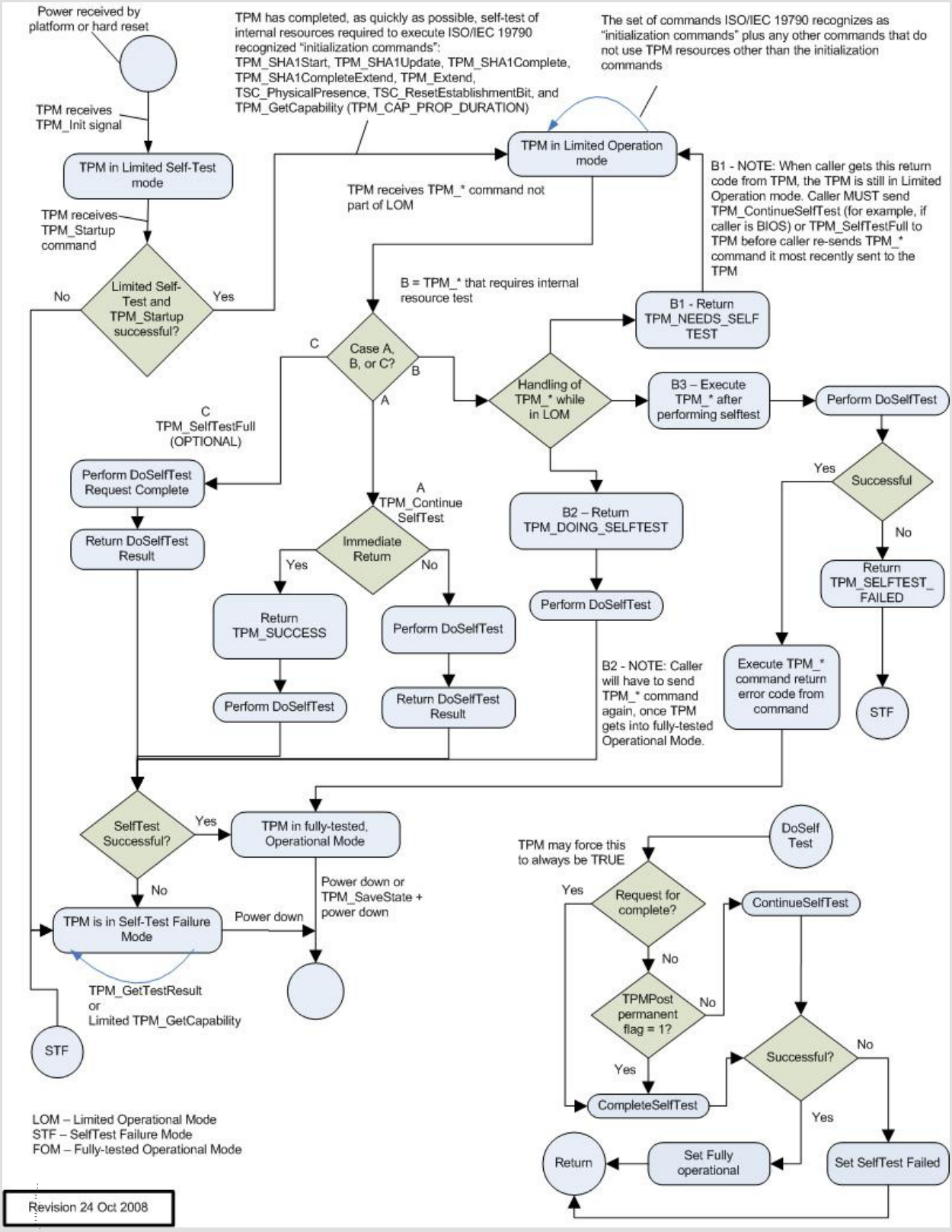

Figure 10:b - Self-Test States

© ISO/IEC 2009 – All rights reserved
Copyright International Organization for Standardization
Provided by IHS under license with ISO
No reproduction or networking permitted without license from IHS
Not for Resale

After initialization the TPM performs a limited self-test. This test provides the assurance that a selected subset of TPM commands will perform properly. The limited nature of the self-test allows the TPM to be functional in as short of time as possible. The commands enabled by this self-test are:

TPM_SHA1xxx – Enabling the SHA-1 commands allows the TPM to assist the platform startup code. The startup code may execute in an extremely constrained memory environment and having the TPM resources available to perform hash functions can allow the measurement of code at an early time. While the hash is available, there are no speed requirements on the I/O bus to the TPM or on the TPM itself so use of this functionality may not meet platform startup requirements.

TPM_Extend – Enabling the extend, and by reference the PCR, allows the startup code to perform measurements. Extending could use the SHA-1 TPM commands or perform the hash using the main processor.

TPM_Startup – This command must be available as it is the transition command from the initial environment to the limited operational state.

TPM_ContinueSelfTest – This command causes the TPM to complete the self-tests on all other TPM functions. If TPM receives a command, and the self-test for that command has not been completed, the TPM may implicitly perform the actions of the TPM_ContinueSelfTest command.

TPM_SelfTestFull – A TPM MAY allow this command after initialization, but typically TPM_ContinueSelfTest would be used to avoid repeating the limited self tests.

TPM_GetCapability – A subset of capabilities can be read in the limited operation state.

The complete self-test ensures that all TPM functionality is available and functioning properly.

End of informative comment

1. At startup, a TPM MUST self-test all internal functions that are necessary to do TPM_SHA1Start, TPM_SHA1Update, TPM_SHA1Complete, TPM_SHA1CompleteExtend, TPM_Extend, TPM_Startup, TPM_ContinueSelfTest, a subset of TPM_GetCapability, and TPM_GetTestResult.
2. The TSC_PhysicalPresence and TSC_ResetEstablishmentBit commands do not operate on shielded-locations and have no requirement to be self-tested before any use.
3. The TPM MAY allow TPM_SelfTestFull to be used before completion of the actions of TPM_ContinueSelfTest.
4. The TPM MAY implicitly run the actions of TPM_ContinueSelfTest upon receipt of a command that requires untested resources.
5. The platform specific specification MUST define the maximum startup self-test time.

10.2.1 Operational Self-Test

Start of informative comment

The completion of self-test is initiated by TPM_ContinueSelfTest. The TPM MAY allow TPM_SelfTestFull to be issued instead of TPM_ContinueSelfTest.

TPM_ContinueSelfTest is the command issued during platform initialization after the platform has made use of the early commands (perhaps for an early measurement), the platform is now performing other initializations, and the TPM can be left alone to complete the self-tests. Before any command other than the limited subset is executed, all self-tests must be complete.

TPM_SelfTestFull is a request to have the TPM perform another complete self-test. This test will take some time but provides an accurate assessment of the TPM's ability to perform all operations.

© ISO/IEC 2009 – All rights reserved

Copyright International Organization for Standardization
Provided by IHS under license with ISO
No reproduction or networking permitted without license from IHS
Not for Resale

The original design of TPM_ContinueSelfTest was for the TPM to test those functions that the original startup did not test. The TCG contracted with a set of FIPS-140-2 laboratories to evaluate the specification and one specific requested change was for TPM_ContinueSelfTest to perform a complete self-test. The rationale is that the original tests are only part of the initialization of the TPM; if they fail, the TPM does not complete initialization. Performing a complete test after initialization meets the FIPS-140-2 requirements. The TPM may work differently in FIPS mode or the TPM may simply write the TPM_ContinueSelfTest command such that it always performs the complete check.

TPM_ContinueSelfTest causes a test of the TPM internal functions. When TPM_ContinueSelfTest is asynchronous, the TPM immediately returns a successful result code before starting the tests. When testing is complete, the TPM does not return any result. When TPM_ContinueSelfTest is synchronous, the TPM completes the self-tests and then returns a success or failure result code.

The TPM may reject any command other than the limited subset if self test has not been completed. Alternatively, the actions of TPM_ContinueSelfTest may start automatically if the TPM receives a command and there has been no testing of the underlying functionality. If the TPM implements this implicit self-test, it may immediately return a result code indicating that it is doing self-test. Alternatively, it may do the self-test, then do the command, and return only the result code of the command.

Programmers of TPM drivers should take into account the time estimates for self-test and minimize the polling for self-test completion. While self-test is executing, the TPM may return an out-of-band “busy” signal to prevent command from being issued. Alternatively, the TPM may accept the command but delay execution until after the self-test completes. Either of those alternatives may appear as if the TPM is blocking to upper software layers. Alternatively, the TPM may return an indication that is doing a self-test.

Upon the completion of the self-tests, the result of the self-tests are held in the TPM such that a subsequent call to TPM_GetTestResult returns the self-test result.

In version 1.1, there was a separate command to create a signed self-test, TPM_CertifySelfTest. Version 1.2 deprecates the command. The new use model is to perform TPM_GetTestResult inside of a transport session and then use TPM_ReleaseTransportSigned to obtain the signature.

If self-tests fail, the TPM goes into failure state and does not allow most other operations to continue. The TPM_GetTestResult will operate in failure mode so an outside observer can obtain information as to the reason for the self-test failure.

A TPM may take three courses of action when presented with a command that requires an untested resource.

1. The TPM may return TPM_NEEDS_SELFTEST, indicating that the execution of the command requires TPM_ContinueSelfTest.
2. The TPM may implicitly execute the self-test and return a TPM_DOING_SELFTEST return code, causing the external software to retry the command.
3. The TPM may implicitly execute the self-test, execute the ordinal, and return the results of the ordinal.

The following example shows how software can detect either mechanism with a single piece of code

1. SW sends TPM_xxx command
2. SW checks return code from TPM
3. If return code is TPM_DOING_SELFTEST, SW attempts to resend
   a. If the TIS times out waiting for TPM ready, pause for self-test time then resend
   b. if TIS timeout, then error

--`,,```,,,,````-`-`,,`,,`,`,,`---
© ISO/IEC 2009 – All rights reserved
Copyright International Organization for Standardization
Provided by IHS under license with ISO
No reproduction or networking permitted without license from IHS
Not for Resale

4. else if return code is TPM_NEEDS_SELFTEST

    a. Send TPM_ContinueSelfTest

5. else

    a. Process the ordinal return code

End of informative comment

1. The TPM MUST provide startup self-tests. The TPM MUST provide mechanisms to allow the self-tests to be run on demand. The response from the self-tests is pass or fail.
2. The TPM MUST complete the startup self-tests in a manner and timeliness that allows the TPM to be of use to the BIOS during the collection of integrity metrics.
3. The TPM MUST complete the required checks before a given feature is in use. If a function self-test is not complete the TPM MUST return TPM_NEEDS_SELFTEST or TPM_DOING_SELFTEST, or do the self-test before using the feature.
4. There are two sections of startup self-tests: required and recommended. The recommended tests are not a requirement due to time constraints. The TPM manufacturer should perform as many tests as possible within the time constraints.
5. The TPM MUST report the tests that it performs.
6. The TPM MUST provide a mechanism to allow self-test to execute on request by any challenger.
7. The TPM MUST provide for testing of some operations during each execution of the operation.
8. The TPM MUST check the following:
    a. RNG functionality
    b. Reading and extending the integrity registers. The self-test for the integrity registers will leave the integrity registers in a known state.
    c. Testing the EK integrity, if it exists
        i. This requirement specifies that the TPM will verify that the endorsement key pair can encrypt and decrypt a known value. This tests the RSA engine. If the EK has not yet been generated the TPM action is manufacturer specific.
    d. The integrity of the protected capabilities of the TPM
        i. This means that the TPM must ensure that its “microcode” has not changed, and not that a test must be run on each function.
    e. Any tamper-resistance markers
        i. The tests on the tamper-resistance or tamper-evident markers are under programmable control. There is no requirement to check tamper-evident tape or the status of epoxy surrounding the case.
9. The TPM SHOULD check the following:
    a. The hash functionality
        i. This check will hash a known value and compare it to an expected result. There is no requirement to accept external data to perform the check.
        ii. The TPM MAY support a test using external data.
    b. Any symmetric algorithms
        i. This check will use known data with a known key or a random key to encrypt and decrypt the data

© ISO/IEC 2009 All rights reserved

Copyright International Organization for Standardization
Provided by IHS under license with ISO
No reproduction or networking permitted without license from IHS
Not for Resale

c. Any additional asymmetric algorithms
   i. This check will use known data to encrypt and decrypt.
d. The key-wrapping mechanism
   i. The TPM should wrap and unwrap a key. The TPM MUST NOT use the endorsement key pair for this test.
e. Any other internal mechanisms

10. Self-Test Failure
    a. When the TPM detects a failure during any self-test, the TPM MUST enter shutdown mode. This shutdown mode will allow only the following operations to occur:
       i. Update. The update function MAY replace invalid microcode, providing that the parts of the TPM that provide update functionality have passed self-test.
       ii. TPM_GetTestResult. This command can assist the TPM manufacturer in determining the cause of the self-test failure.
       iii. TPM_GetCapability may return limited information as specified in the ordinal.
       iv. All other operations will return the error code TPM_FAILEDSELFTEST.
    b. The TPM MUST leave failure mode only after receipt of TPM_Init followed by TPM_Startup(ST_CLEAR).
11. Prior to the completion of the actions of TPM_ContinueSelfTest the TPM MAY respond in two ways
    a. The TPM MAY automatically invoke the actions of TPM_ContinueSelfTest.
       i. The TPM MAY return TPM_DOING_SELFTEST.
       ii. The TPM may complete the self-test, execute the command, and return the command result.
    b. The TPM MAY return the error code TPM_NEEDS_SELFTEST

10.3 Startup

Start of informative comment

Startup transitions the TPM from the initialization state to an operational state. The transition includes information from the platform to inform the TPM of the platform operating state. TPM_Startup has three options: Clear, State and Deactivated.

The Clear option informs the TPM that the platform is starting in a “cleared” state or most likely a complete reboot. The TPM is to set itself to the default values and operational state specified by the TPM Owner.

The State option informs the TPM that the platform is requesting the TPM to recover a saved state and continue operation from the saved state. The platform previously made the TPM_SaveState request to the TPM such that the TPM prepares values to be recovered later.

The Deactivated state informs the TPM that it should not allow further operations and should fail all subsequent command requests. The Deactivated state can only be reset by performing another TPM_Init.

End of informative comment

--`,,```,,,,````-`-`,,`,,`,`,,`---

© ISO/IEC 2009 – All rights reserved
Copyright International Organization for Standardization
Provided by IHS under license with ISO
No reproduction or networking permitted without license from IHS
Not for Resale

10.4 Operational Mode

Start of informative comment

After the TPM completes both TPM_Startup and self-tests, the TPM is ready for operation.

There are three discrete states, enabled or disabled, active or inactive and owned or unowned. These three states when combined form eight operational modes.



Figure 10:c - Eight Modes of Operation

S1 is the fully operational state where all TPM functions are available. S8 represents a mode where all TPM features (except those to change the state) are off.

Given the eight modes of operation, the TPM can be flexible in accommodating a wide range of usage scenarios. The default delivery state for a TPM should be S8 (disabled, inactive and unowned). In S8, the only mechanism available to move the TPM to S1 is having physical access to the platform.

Two examples illustrate the possibilities of shipping combinations.

Example 1

The customer does not want the TPM to attest to any information relative to the platform. The customer does not want any remote entity to attempt to change the control options that the platform owner is setting. For this customer the platform manufacturer sets the TPM in S8 (disabled, deactivated and unowned).

To change the state of the platform the platform owner would assert physical presence and enable, activate and insert the TPM Owner shared secret. The details of how to change the various modes is in subsequent sections.

This particular sequence gives maximum control to the customer.

Example 2

A corporate customer wishes to have platforms shipped to their employees and the IT department wishes to take control of the TPM remotely. To satisfy these needs the TPM should be in S5 (enabled, active and unowned). When the platform connects to the corporate LAN the IT department would execute the TPM_TakeOwnership command remotely.

This sequence allows the IT department to accept platforms into their network without having to have physical access to each new machine.

End of informative comment

© ISO/IEC 2009 All rights reserved

Copyright International Organization for Standardization
Provided by IHS under license with ISO
No reproduction or networking permitted without license from IHS
Not for Resale

The TPM MUST have commands to perform the following:

1. Enable and disable the TPM. These commands MUST work as TPM Owner authorized or with the assertion of physical presence
2. Activate and deactivate the TPM. These commands MUST work as TPM Owner authorized or with the assertion of physical presence
3. Activate and deactivate the ability to take ownership of the TPM
4. Assert ownership of the TPM.

10.4.1 Enabling a TPM

Informative comment

A disabled TPM is not able to execute commands that use the resources of a TPM. While some commands are available (SHA-1 for example) the TPM is not able to load keys and perform TPM_Seal and other such operations. These restrictions are the same as for an inactive TPM. The difference between inactive and disabled is that a disabled TPM is unable to execute the TPM_TakeOwnership command. A disabled TPM that has a TPM Owner is not able to execute normal TPM commands.

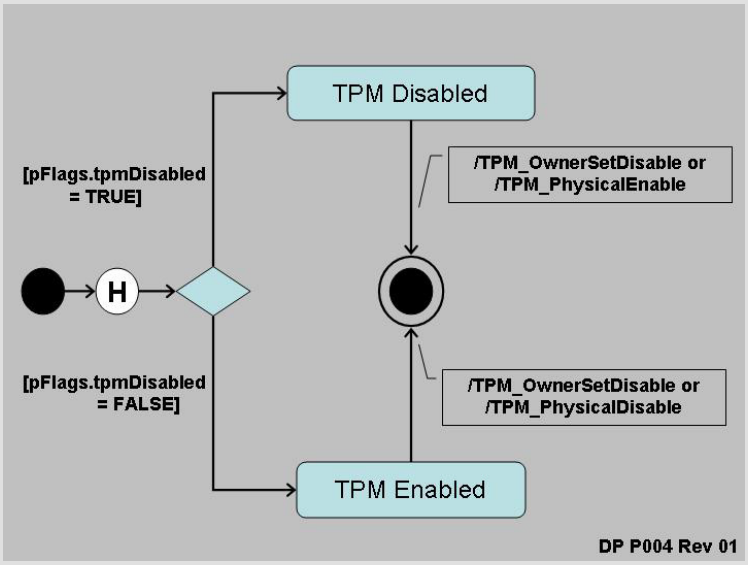

pFlags.tpmDisabled contains the current enablement status. When set to TRUE the TPM is disabled, when FALSE the TPM is enabled.

Changing the setting pFlags.tpmDisabled has no effect on any secrets or other values held by the TPM. No keys, monotonic counters or other resources are invalidated by changing TPM enablement. There is no guarantee that session resources (like transport sessions) survive the change in enablement, but there is no loss of secrets.

The TPM_OwnerSetDisable command can be used to transition in either Enabled or Disabled states. The desired state is a parameter to TPM_OwnerSetDisable. This command requires TPM_Owner-Authentication to operate. It is suitable for post-boot and remote invocation.

An unowned TPM requires the execution of TPM_PhysicalEnable to enable the TPM and TPM_PhysicalDisable to disable the TPM. Operators of an owned TPM can also execute these two commands. The use of the physical commands allows a platform operator to disable the TPM without TPM Owner authorization.

Copyright International Organization for Standardization
Provided by IHS under license with ISO
No reproduction or networking permitted without license from IHS
Not for Resale
© ISO/IEC 2009 – All rights reserved

TPM_PhysicalEnable transitions the TPM from Disabled to Enabled state. This command is guarded by a requirement of operator physical presence. Additionally, this command can be invoked by a physical event at the platform, whether or not the TPM has an Owner or there is a human physically present. This command is suitable for pre-boot invocation.

TPM_PhysicalDisable transitions the TPM from Enabled to Disabled state. It has the same guard and invocation properties as TPM_PhysicalEnable.

The subset of commands the TPM is able to execute is defined in the structures document in the persistent flag section.

Misuse of the disabled state can result in denial-of-service. Proper management of Owner AuthData and physical access to the platform is a critical element in ensuring availability of the system.

End of informative comment

1. The TPM MUST provide an enable and disable command that is executed with TPM Owner authorization.
2. The TPM MUST provide an enable and disable command this is executed locally using physical presence.

10.4.2 Activating a TPM

Informative comment

A deactivated TPM is not able to execute commands that use TPM resources. A major difference between deactivated and disabled is that a deactivated TPM CAN execute the TPM_TakeOwnership command.

Deactivated may be used to prevent the (obscure) attack where a TPM is readied for TPM_TakeOwnership but a remote rogue manages to take ownership of a platform just before the genuine owner, and immediately has use of the TPM's facilities. To defeat this attack, a genuine owner should set disable==FALSE, ownership==TRUE, deactivate==TRUE, execute TPM_takeOwnership, and then set deactivate==FALSE after verifying that the genuine owner is the actual TPM owner.

Activation control is with both persistent and volatile flags. The persistent flag is never directly checked by the TPM, rather it is the source of the original setting for the volatile flag. During TPM initialization the value of pFlags.tpmDeactivated is copied to vFlags.tpmDeactivated. When the TPM execution engine checks for TPM activation, it only references vFlags.tpmDeactivated.

Toggling the state of pFlags.tpmDeactivated uses TPM_PhysicalSetDeactivated. This command requires physical presence. There is no associated TPM Owner authenticated command as the TPM Owner can always execute TPM_OwnerSetDisabled which results in the same TPM operations. The toggling of this flag does not affect the current operation of the TPM but requires a reboot of the platform such that the persistent flag is again copied to the volatile flag.

The volatile flag, vFlags.tpmDeactivated, is set during initialization by the value of pFlags.tpmDeactivated. If vFlags.tpmDeactivated is TRUE the only way to reactivate the TPM is to reboot the platform and have pFlags reset the vFlags value.

If vFlags.tpmDeactivated is FALSE, running TPM_SetTempDeactivated will set vFlags.tpmDeactivated to TRUE and then require a reboot of the platform to reactivate the platform.

© ISO/IEC 2009 – All rights reserved

Copyright International Organization for Standardization
Provided by IHS under license with ISO
No reproduction or networking permitted without license from IHS
Not for Resale

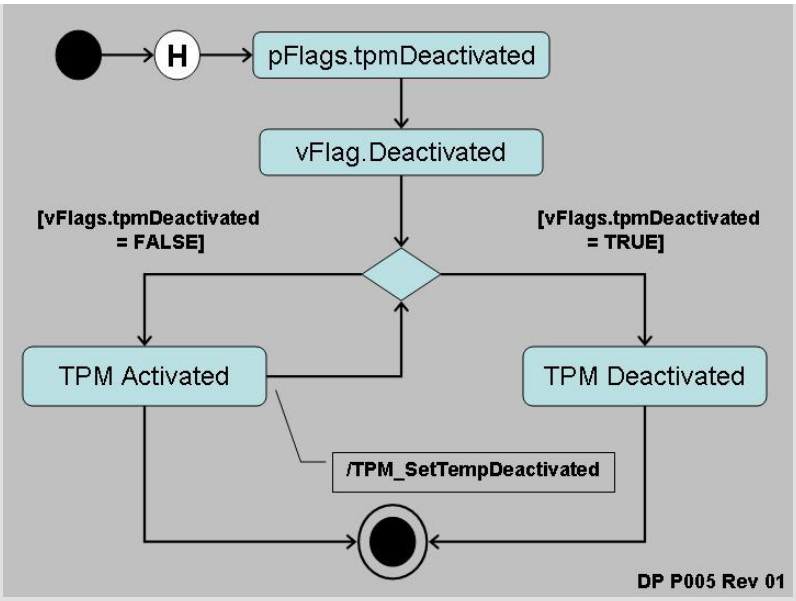

Figure 10:d - Activated and Deactivated States

TPM activation is for Operator convenience. It allows the operator to deactivate the platform (temporarily, using TPM_SetTempDeactivated) during a user session when the operator does not want to disclose platform or attestation identity. This provides operator privacy, since PCRs could provide cryptographic proof of an operation. PCRs are inaccessible when a TPM is deactivated. They cannot be used for authorization, nor can they be read. The reboot required to activate a TPM also resets the PCRs.

The subset of commands that are available when the TPM is deactivated is contained in the structures document. The TPM_TakeOwnership command is available when deactivated. The TPM_Extend command is available when deactivated so that software (e.g. a BIOS) can run the command without the need to handle an error. The PCR extend operation is irrelevant, since the resulting PCR value cannot be used.

End of informative comment

1. The TPM MUST maintain a non-volatile flag that indicates the activation state
2. The TPM MUST provide for the setting of the non-volatile flag using a command that requires physical presence
3. The TPM MUST sets a volatile flag using the current setting of the non-volatile flag.
4. The TPM MUST provide for a command that deactivates the TPM immediately
5. The only mechanism to reactivate a TPM once deactivated is to power-cycle the system.

10.4.3 Taking TPM Ownership

Start of informative comment

The owner of the TPM has ultimate control of the TPM. The owner of the TPM can enable or disable the TPM, create AIK and set policies for the TPM. The process of taking ownership must be a tightly controlled process with numerous checks and balances.

The protections around the taking of ownership include the enablement status, specific persistent flags and the assertion of physical presence.

Control of the TPM revolves around knowledge of the TPM_Owner-Authentication value. Proving knowledge of authentication value proves the calling entity is the TPM Owner. It is possible for more than one entity to know the TPM_Owner-Authentication value.

--`,,```,,,,````-`-`,,`,,`,`,,`---

© ISO/IEC 2009 – All rights reserved
Copyright International Organization for Standardization
Provided by IHS under license with ISO
No reproduction or networking permitted without license from IHS
Not for Resale

The TPM provides no mechanisms to recover a lost TPM_Owner-Authentication value.

Recovery from a lost or forgotten TPM_Owner-Authentication value involves removing the old value and installing a new one. The removal of the old value invalidates all information associated with the previous value. Insertion of a new value can occur after the removal of the old value.

A disabled and inactive TPM that has no TPM Owner cannot install an owner.

To invalidate the TPM_Owner-Authentication value use either TPM_OwnerClear or TPM_ForceClear.

End of informative comment

1. The TPM_Owner-Authentication value MUST be 160-bits
2. The TPM_Owner-Authentication value MUST be held in persistent storage
3. The TPM MUST have no mechanisms to recover a lost TPM_Owner-Authentication value

10.4.3.1 Enabling Ownership

Informative comment

The state that a TPM must be in to allow for TPM_TakeOwnership to succeed is; enabled and fFlags.OwnershipEnabled TRUE.

The following diagram shows the states and the operational checks the TPM makes before allowing the insertion of the TPM Ownership value.

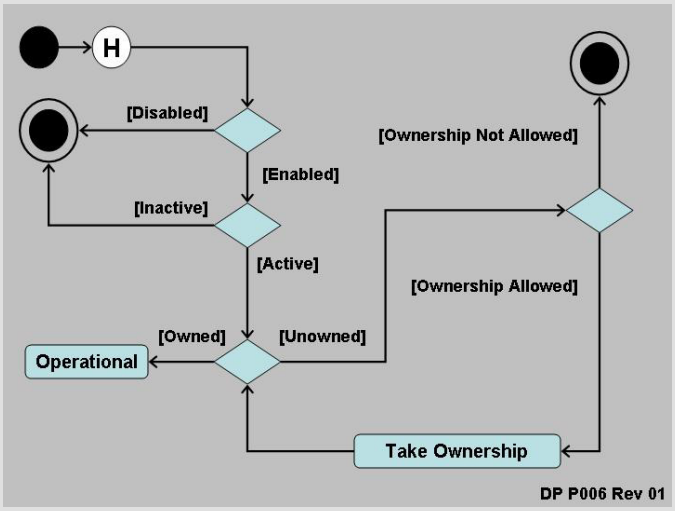

The TPM checks the disabled flag and then the inactive flag. If the flags indicate enabled then the TPM checks for the existence of a TPM Owner. If an Owner is not present the TPM then checks the OwnershipDisabled flag. If TRUE the TPM_TakeOwnership command will execute.

While the TPM has no Owner but is enabled and active there is a limited subset of commands that will successfully execute.

The TPM_SetOwnerInstall command toggles the state of the pFlags.OwnershipDisabled. TPM_SetOwnerInstall requires the assertion of physical presence to execute.

End of informative comment

--`,,```,,,,````-`-`,,`,,`,`,,`---

© ISO/IEC 2009 – All rights reserved

Copyright International Organization for Standardization
Provided by IHS under license with ISO
No reproduction or networking permitted without license from IHS
Not for Resale

10.4.4 Transitioning Between Operational States

Start of informative comment

The following table is a recap of the commands necessary to transition a TPM from one state to another.

State	TPM Owner Auth	Physical Presence	Persistence
Disabled to Enabled	TPM_OwnerSetDisable	TPM_PhysicalEnable	permanent
Enabled to Disabled	TPM_OwnerSetDisable	TPM_PhysicalDisable	permanent
Inactive to Active		TPM_PhysicalSetDeactivated	permanent
Active to Inactive		TPM_PhysicalSetDeactivated	permanent
Active to Inactive		TPM_SetTempDeactivated	boot cycle

End of informative comment

10.5 Clearing the TPM

Start of informative comment

Clearing the TPM is the process of returning the TPM to factory defaults. It is possible the platform owner will change when in this state.

The commands to clear a TPM require either TPM_Owner-Authentication or the assertion of physical presence.

The clear process performs the following tasks:

Invalidate the SRK. Once invalidated all information stored using the SRK is now unavailable. The invalidation does not change the blobs using the SRK rather there is no way to decrypt the blobs after invalidation of the SRK.

Invalidate tpmProof. tpmProof is a value that provides the uniqueness to values stored off of the TPM. By invalidating tpmProof all off TPM blobs will no longer load on the TPM.

Invalidate the TPM_Owner-Authentication value. With the authentication value invalidated there are no TPM Owner authenticated commands that will execute.

Reset volatile and non-volatile data to manufacturer defaults.

The clear must not affect the EK.

Once cleared the TPM will return TPM_NOSRK to commands that require authentication.

The PCR values are undefined after a clear operation. The TPM must go through TPM_Init to properly set the PCR values.

Clear authentication comes from either the TPM owner or the assertion of physical presence. As the clear commands present a real opportunity for a denial of service attack there are mechanisms in place disabling the clear commands.

Disabling TPM_OwnerClear uses the TPM_DisableOwnerClear command. The state of ability to execute TPM_OwnerClear is then held as one of the non-volatile flags.

Enablement of TPM_ForceClear is held in the volatile disableForceClear flag. disableForceClear is set to FALSE during TPM_Init. To disable the command software should issue the TPM_DisableForceClear command.

During the TPM startup processing anyone with physical access to the machine can issue the TPM_ForceClear command. This command performs the clear operations if it has not been disabled by vFlags.DisabledForceClear being TRUE.

© ISO/IEC 2009 – All rights reserved
Copyright International Organization for Standardization
Provided by IHS under license with ISO
No reproduction or networking permitted without license from IHS
Not for Resale

The TPM can be configured to block all forms of clear operations. It is advisable to block clear operations to prevent an otherwise trivial denial-of-service attack. The assumption is the system startup code will issue the TPM_DisableForceClear on each power-cycle after it is determined the TPM_ForceClear command will not be necessary. The purpose of the TPM_ForceClear command is to recover from the state where the Owner has lost or forgotten the TPM Owner-authentication-data.

The TPM_ForceClear must only be possible when the issuer has physical access to the platform. The manufacturer of a platform determines the exact definition of physical access.

The commands to clear a TPM require either TPM_Owner-Authentication, TPM_OwnerClear, or the assertion of physical presence, TPM_ForceClear.

End of informative comment

1. The TPM MUST support the clear operations.
    a. Clear operations MUST be authenticated by either the TPM Owner or physical presence
    b. The TPM MUST support mechanisms to disable the clear operations
2. The clear operation MUST perform at least the following actions
    a. SRK invalidation
    b. tpmProof invalidation
    c. TPM_Owner-Authentication value invalidation
    d. Resetting non-volatile values to defaults
    e. Invalidation of volatile values
    f. Invalidation of internal resources
3. The clear operation must not affect the EK.

© ISO/IEC 2009 – All rights reserved

Copyright International Organization for Standardization
Provided by IHS under license with ISO
No reproduction or networking permitted without license from IHS
Not for Resale

11. Physical Presence

Start of informative comment

ISO/IEC 11889 describes commands that require physical presence at the platform before the command will operate. Physical presence implies direct interaction by a person – i.e. Operator with the platform / TPM.

The type of controls that imply special privilege include:

- Clearing an existing Owner from the TPM,
- Temporarily deactivating a TPM,
- Temporarily disabling a TPM.

Physical presence implies a level of control and authorization to perform basic administrative tasks and to bootstrap management and access control mechanisms.

Protection of low-level administrative interfaces can be provided by physical and electrical methods; or by software; or a combination of both. The guiding principle for designers is the protection mechanism should be difficult or impossible to spoof by rogue software. Designers should take advantage of restricted states inherent in platform operation. For example, in a PC, software executed during the power-on self-test (POST) cannot be disturbed without physical access to the platform. Alternatively, a hardware switch indicating physical presence is very difficult to circumvent by rogue software or remote attackers.

TPM and platform manufacturers will determine the actual implementation approach. The strength of the protection mechanisms is determined by an evaluation of the platform.

Physical presence indication is implemented as a flag in volatile memory known as the PhysicalPresenceV flag. When physical presence is established (TRUE) several TPM commands are able to function. They include:

TPM_PhysicalEnable,

TPM_PhysicalDisable,

TPM_PhysicalSetDeactivated,

TPM_ForceClear,

TPM_SetOwnerInstall,

In order to execute these commands, the TPM must obtain unambiguous assurance that the operation is authorized by physical-presence at the platform. The command processor in the I/O component checks the physicalPresenceV flag before continuing processing of TPM command blocks. The volatile physicalPresenceV flag is set only while the Operator is indeed physically present.

TPM designers should take precautions to ensure testing of the physicalPresenceV flag value is not mask-able. For example, a special bus cycle could be used or a dedicated line implemented.

There is an exception to physical presence semantics that allows a remote entity the ability to assert physical presence when that entity is not physically present. The TSC_PhysicalPresence command is used to change polarity of the physicalPresenceV flag. Its use is heavily guarded. See sections describing the TPM Opt-In component; and Volatile and Non-volatile memory components.

The following diagram illustrates the flow of logic controlling updates to the physicalPresenceV flag:

© ISO/IEC 2009 – All rights reserved
Copyright International Organization for Standardization
Provided by IHS under license with ISO
No reproduction or networking permitted without license from IHS
Not for Resale

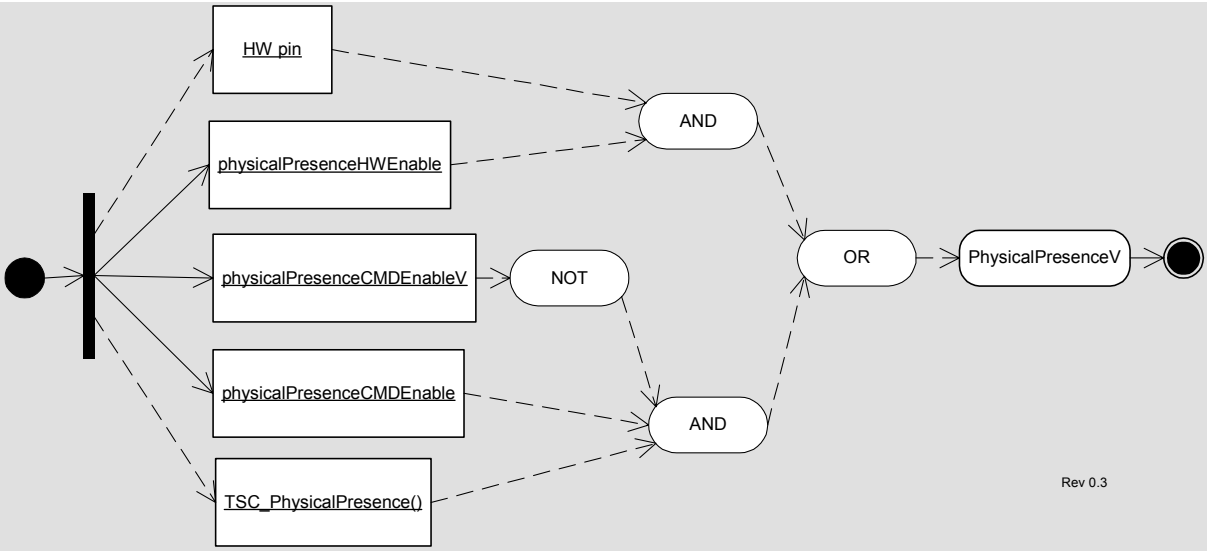

Figure 11:a - Physical Presence Control Logic

This diagram shows that the vFlags.physicalPresenceV flag may be updated either by a HW pin or through the TSC_PhysicalPresence command, but gated by persistent control flags and a temporal lock. Observe, the reverse logic surrounding the use of TSC_PhysicalPresence command. When the physicalPresenceCMDEnable flag is set and the physicalPresenceCMDEnableV is not set, and the TSC_PhysicalPresence command may execute.

The physicalPresenceV flag may be overridden by unambiguous physical presence. Conceptually, the use of dedicated electrical hardware providing a trusted path to the Operator has higher precedence than the physicalPresenceV flag value. Implementers should take this into consideration when implementing physical presence indicators.

End of informative comment

1. The requirement for physical presence MUST be met by the platform manufacturer using some physical mechanism.
2. It SHALL be impossible to intercept or subvert indication of physical presence to the TPM by the execution of software on the platform.

--`,,```,,,,````-`-`,,`,,`,`,,`---

© ISO/IEC 2009 – All rights reserved

Copyright International Organization for Standardization
Provided by IHS under license with ISO
No reproduction or networking permitted without license from IHS
Not for Resale

12. Root of Trust for Reporting (RTR)

Start of informative comment

The RTR is responsible for establishing platform identities, reporting platform configurations, protecting reported values, and providing a function for attesting to reported values. The RTR shares responsibility of protecting measurement digests with the RTS.

The interaction between the RTR and RTS is a critical component. The design and implementation of the interaction between the RTR and RTS should mitigate observation and tampering with the messages. It is strongly encouraged that the RTR and RTS implementation occur in the same package such there are no external observation points. For a silicon based TPM this would imply that the RTR and RTS are in the same silicon package with no external busses.

End of informative comment

1. An instantiation of the RTS and RTR SHALL do the following:
    a. Be resistant to all forms of software attack and to the forms of physical attack implied by the platform's Protection Profile
    b. Supply an accurate digest of all sequences of presented integrity metrics

12.1 Platform Identity

Start of informative comment

The RTR is a cryptographic identity used to distinguish and authenticate an individual TPM. The TPM uses the RTR to answer an integrity challenge.

In the TPM, the Endorsement Key (EK) is the RTR. The EK is cryptographically unique and bound to the TPM.

Prior to any use of the TPM, the RTR must be instantiated. Instantiation may occur during TPM manufacturing or platform manufacturing. The business issues and manufacturing flow determines how a specific TPM and platform is initialized with the EK.

As the RTR is cryptographically unique, the use of the RTR must only occur in controlled circumstances due to privacy concerns. The EK is only available for two operations: establishing the TPM Owner and establishing Attestation Identity Key (AIK) values and credentials. There is a prohibition on the use of the EK for any other operation.

End of informative comment

1. The RTR MUST have a cryptographic identity.
    a. The cryptographic identity of the RTR is the Endorsement Key (EK).
2. The EK MUST be
    a. Statistically unique
        i. When the TPM is in FIPS mode, the EK MUST be generated using a random number generator that meets FIPS requirements.
        ii. Difficult to forge or counterfeit
    b. Verifiable during the AIK creation process
3. The EK SHALL only participate in
    a. TPM Ownership insertion
    b. AIK creation and verification

© ISO/IEC 2009 – All rights reserved
Copyright International Organization for Standardization
Provided by IHS under license with ISO
No reproduction or networking permitted without license from IHS
Not for Resale

12.2 RTR to Platform Binding

Start of informative comment

When performing validation of the EK and the platform the challenger wishes to have knowledge of the binding of RTR to platform. The RTR is bound to a TPM hence if the platform can show the binding of TPM to platform the challenger can reasonably believe the RTR and platform binding.

The TPM cannot provide all of the information necessary for the challenger to trust in the binding. That information comes from the manufacturing process and occurs outside the control of the TPM.

End of informative comment

1. The EK is transitively bound to the Platform via the TPM as follows:
    a. An EK is bound to one and only one TPM (i.e., there is a one to one correspondence between an Endorsement Key and a TPM.)
    b. A TPM is bound to one and only one Platform. (i.e., there is a one to one correspondence between a TPM and a Platform.)
    c. Therefore, an EK is bound to a Platform. (i.e., there is a one to one correspondence between an Endorsement Key and a Platform.)

12.3 Platform Identity and Privacy Considerations

Start of informative comment

The uniqueness property of cryptographic identities raises concerns that use of that identity could result in aggregation of activity logs. Analysis of the aggregated activity could reveal personal information that a user of a platform would not otherwise approve for distribution to the aggregators. Both EK and AIK identities have this property.

To counter undesired aggregation, TCG encourages the use of domain specific AIK keys and restricts the use of the EK key. The platform owner controls generation and distribution of AIK public keys.

If a digital signature was performed by the EK, then any entity could track the use of the EK. So use of the EK as a signature is cryptographically sound, but this does not ensure privacy. Therefore, a mechanism to allow verifiers (human or machine) to determine that the TPM really signed the message without using the EK is required.

End of informative comment

12.4 Attestation Identity Keys

Start of informative comment

An Attestation Identity Key (AIK) is an alias for the Endorsement Key (EK). The EK cannot perform signatures for security reasons and due to privacy concerns.

Generation of an AIK can occur anytime after establishment of the TPM Owner. The TPM can create a virtually unlimited number of AIK.

The TPM Owner controls all aspects of the generation and activation of an AIK. The TPM Owner controls any data associated with the AIK. The AIK credential may contain application specific information. The AIK must contain identification such that the TPM can properly enforce the restrictions placed on an AIK.

The AIK is an asymmetric key pair. For interoperability, the AIK is an RSA 2048-bit key. The TPM must protect the private portion of the asymmetric key and ensure that the value is never exposed. The user of an AIK must prove knowledge of the 160-bit AIK authorization value to use the AIK.

© ISO/IEC 2009 – All rights reserved

Copyright International Organization for Standardization
Provided by IHS under license with ISO
No reproduction or networking permitted without license from IHS
Not for Resale

An AIK is a signature key, and is never used for encryption. It only signs information generated internally by the TPM. The data could include PCR, other keys and TPM status information. The AIK must never sign arbitrary external data, since it would be possible for an attacker to create a block of data that appears to be a PCR value.

AIK creation involves two TPM commands.

The TPM_MakeIdentity command causes the TPM to generate the AIK key pair. The command also discloses the EK-AIK binding to the service that will issue the AIK credential.

The TPM_ActivateIdentity command unwraps a session key that allows for the decryption of the AIK credential. The session key was encrypted using the PUBEK and requires the PRIVEK to perform the decryption.

Use of the AIK credential is outside of the control of the TPM.

End of informative comment

1. The TPM MUST permanently mark an AIK such that, for all subsequent uses of the AIK, the AIK restrictions are enforced.
2. An AIK MUST be:
   a. Statistically unique
   b. Difficult to forge or counterfeit
   c. Verifiable to challengers
3. For interoperability the AIK MUST be
   a. An RSA 2048-bit key
4. The AIK MUST only sign data generated by the TPM

12.4.1 AIK Creation

Start of informative comment

As the AIK is an alias for the EK. The AIK creation process requires TPM Owner authorization. The process actually requires two TPM Owner authorizations; creation and credential activation.

The AIK credential creation process is outside the control of the TPM. However, the certification authority (CA) will attest (with the AIK credential) that the AIK is tied to valid Endorsement, Platform and Conformance credentials.

Without these credentials, the AIK cannot prove that PCR values belong to a TPM. An owner may decide to trust any key generated by TPM_MakeIdentity without activating the identity (e.g., because he is an administrator in a controlled company environment). In this case, the owner needs no credential. Another challenger can only trust that the AIK belongs to a TPM by seeing the credential of a trustworthy CA.

End of informative comment

1. The TPM Owner MUST authorize the AIK creation process.
2. The TPM MUST use a protected function to perform the AIK creation.
3. The TPM Owner MUST indicate the entity that will provide the AIK credential as part of the AIK creation process.
4. The TPM Owner MAY indicate that NO credential will ever be created. If the TPM Owner does indicate that no credential will be provided the TPM MUST ensure that no credential can be created.

© ISO/IEC 2009 – All rights reserved
Copyright International Organization for Standardization
Provided by IHS under license with ISO
No reproduction or networking permitted without license from IHS
Not for Resale

5. The TTP MAY apply policies to determine if the presented AIK should be granted a credential.
6. The credential request package MUST be useable by only the Privacy CA selected by the TPM Owner.
7. The AIK credential MUST be only obtainable by the TPM that created the AIK credential request.

12.4.2 AIK Storage

Start of informative comment

The AIK may be stored on some general-purpose storage device.

When held outside of the TPM the AIK sensitive data must be encrypted and integrity protected.

End of informative comment

1. When held outside of the TPM AIK encryption and integrity protection MUST protect the AIK sensitive information
2. The migration of AIK from one TPM to another MUST be prohibited

© ISO/IEC 2009 – All rights reserved
Copyright International Organization for Standardization
Provided by IHS under license with ISO
No reproduction or networking permitted without license from IHS
Not for Resale

13. Root of Trust for Storage (RTS)

Start of informative comment

The RTS provides protection on data in use by the TPM but held in external storage devices. The RTS provides confidentiality and integrity for the external blobs.

The RTS also provides the mechanism to ensure that the release of information only occurs in a named environment. The naming of an environment uses the PCR selection to enumerate the values.

Data protected by the RTS can migrate to other TPM.

End of informative comment

1. The number and size of values held by the RTS SHOULD be limited only by the volume of storage available on the platform
2. The TPM MUST ensure that TPM_PERMANENT_DATA -> tpmProof is only inserted into TPM internally generated and non-migratable information.

13.1 Loading and Unloading Blobs

Start of informative comment

The TPM provides several commands to store and load RTS controlled data.

	Class	Command	Analog	Comment
1	Data / Internal / TPM	TPM_MakeIdentity	TPM_ActivateIdentity	Special purpose data
2	Data / External / TPM	TSS_Bind	TPM_Unbind	
3	Data / Internal / PCR	TPM_Seal	TPM_Unseal	
4	Data / External / PCR			
5	Key / Internal / TPM	TPM_CreateWrapKey	TPM_LoadKey	
6	Key / External / TPM	TSS_WrapKey	TPM_LoadKey	
7	Key / Internal / PCR			
8	Key / External / PCR	TSS_WrapKeyToPcr	TPM_LoadKey	

© ISO/IEC 2009 – All rights reserved
Copyright International Organization for Standardization
Provided by IHS under license with ISO
No reproduction or networking permitted without license from IHS
Not for Resale

14. Transport Sessions and Authorization Protocols

Start of informative comment

The purpose of the authorization protocols and mechanisms is to prove to the TPM that the requestor has permission to perform a function and use some object. The proof comes from the knowledge of a shared secret.

AuthData is available for the TPM Owner and each entity (keys, for example) that the TPM controls. The AuthData for the TPM Owner and the SRK are held within the TPM itself and the AuthData for other entities are held with the entity.

The TPM Owner AuthData allows the Owner to prove ownership of the TPM. Proving ownership of the TPM does not immediately allow all operations – the TPM Owner is not a "super user" and additional AuthData must be provided for each entity or operation that has protection.

The TPM treats knowledge of the AuthData as complete proof of ownership of the entity. No other checks are necessary. The requestor (any entity that wishes to execute a command on the TPM or use a specific entity) may have additional protections and requirements where he or she (or it) saves the AuthData; however, the TPM places no additional requirements.

There are three protocols to securely pass a proof of knowledge of AuthData from requestor to TPM; the "Object-Independent Authorization Protocol" (OIAP), the "Object-Specific Authorization Protocol" (OSAP) and the "Delegate-Specific Authorization Protocol" (DSAP). The OIAP supports multiple authorization sessions for arbitrary entities. The OSAP supports an authentication session for a single entity and enables the confidential transmission of new authorization information. The DSAP supports the delegation of owner or entity authorization.

New authorization information is inserted by the "AuthData Insertion Protocol" (ADIP) during the creation of an entity. The "AuthData Change Protocol" (ADCP) and the "Asymmetric Authorization Change Protocol" (AACP) allow the changing of the AuthData for an entity. The protocol definitions allow expansion of protocol types to additional ISO/IEC 11889 required protocols and vendor specific protocols.

The protocols use a "rolling nonce" paradigm. This requires that a nonce from one side be in use only for a message and its reply. For instance, the TPM would create a nonce and send that on a reply. The requestor would receive that nonce and then include it in the next request. The TPM would validate that the correct nonce was in the request and then create a new nonce for the reply. This mechanism is in place to prevent replay attacks and man-in-the-middle attacks.

The basic protocols do not provide long-term protection of AuthData that is the hash of a password or other low-entropy entities. The TPM designer and application writer must supply additional protocols if protection of these types of data is necessary.

The design criterion of the protocols is to allow for ownership authentication, command and parameter authentication and prevent replay and man-in-the-middle attacks.

The passing of the AuthData, nonces and other parameters must follow specific guidelines so that commands coming from different computer architectures will interoperate properly.

End of informative comment

1. AuthData MUST use one of the following protocols
   a. OIAP
   b. OSAP
   c. DSAP
2. Entity creation MUST use one of the following protocols
   a. ADIP

--`,,```,,,,````-`-`,,`,,`,`,,`---

© ISO/IEC 2009 – All rights reserved

Copyright International Organization for Standardization
Provided by IHS under license with ISO
No reproduction or networking permitted without license from IHS
Not for Resale

3. Changing AuthData MUST use one of the following protocols
   a. ADCP
   b. AACP
4. The TPM MAY support additional protocols to authenticate, insert and change AuthData.
5. When a command has more than one AuthData value
   a. Each AuthData MUST use the same SHA-1 of the parameters
6. Keys MAY specify AuthDataUsage -> TPM_AUTH_NEVER
   a. If the caller changes the tag from TPM_TAG_RQU_AUTH1_xxx to TPM_TAG_RQU_XXX the TPM SHALL ignore the AuthData values
   b. If the caller leaves the tag as TPM_TAG_RQU_AUTH1
      i. The TPM will compute the AuthData based on the value store in the AuthData location within the key, IGNORING the state of the AuthDataUsage flag.
   c. Users may choose to use a well-known value for the AuthData when setting AuthDataUsage to TPM_AUTH_NEVER.
   d. If a key has AuthDataUsage set to TPM_AUTH_ALWAYS but is received in a command with the tag TPM_TAG_RQU_COMMAND, the command MUST return an error code.
7. For commands that normally have 2 authorization sessions, if the tag specifies only one in the parameter array, then the first session listed is ignored (AuthDataUsage must be TPM_AUTH_NEVER for this key) and the incoming session data is used for the second auth session in the list.
8. Keys MAY specify AuthDataUsage -> TPM_AUTH_PRIV_USE_ONLY
   a. If the key used in a command to read/access the public portion of the key (e.g. TPM_CertifyKey, TPM_GetPubKey)
      i. If the caller changes the tag from TPM_TAG_RQU_AUTH1_xxx to TPM_TAG_RQU_XXX the TPM SHALL ignore the AuthData values
      ii. If the caller leaves the tag as TPM_TAG_RQU_AUTH1
      iii. The TPM will compute the AuthData based on the value store in the AuthData location within the key, IGNORING the state of the AuthDataUsage flag
   b. else if the key used in command to read/access the private portion of the key(e.g. TPM_Sign)
      i. If the tag is TPM_TAG_RQU_COMMAND, the command MUST return an error code.

14.1 Authorization Session Setup

Start of informative comment

The TPM provides two protocols for authorizing the use of entities without revealing the AuthData on the network or the connection to the TPM. In both cases, the protocol exchanges nonce-data so that both sides of the transaction can compute a hash using shared secrets and nonce-data. Each side generates the hash value and can compare to the value transmitted. Network listeners cannot directly infer the AuthData from the hashed objects sent over the network.

The first protocol is the Object-Independent Authorization Protocol (OIAP), which allows the exchange of nonces with a specific TPM. Once an OIAP session is established, its nonces can be used to authorize the use of any entity managed by the TPM. The session can live indefinitely until either party requests the session termination. The TPM_OIAP function starts the OIAP session.

© ISO/IEC 2009 – All rights reserved
Copyright International Organization for Standardization
Provided by IHS under license with ISO
No reproduction or networking permitted without license from IHS
Not for Resale

The second protocol is the Object Specific Authorization Protocol (OSAP). The OSAP allows establishment of an authentication session for a single entity. The session creates nonces that can authorize multiple commands without additional session-establishment overhead, but is bound to a specific entity. The TPM_OSAP command starts the OSAP session. The TPM_OSAP specifies the entity to which the authorization is bound.

Most commands allow either form of authorization protocol. In general, however, the OIAP is preferred – it is more generally useful because it allows usage of the same session to provide authorization for different entities. The OSAP is, however, necessary for operations that set or reset AuthData.

OIAP sessions were designed for reasons of efficiency; only one setup process is required for potentially many authorizations.

An OSAP session is doubly efficient because only one setup process is required for potentially many authorization calculations and the entity AuthData secret is required only once. This minimizes exposure of the AuthData secret and can minimize human interaction in the case where a person supplies the AuthData information. The disadvantage of the OSAP is that a distinct session needs to be setup for each entity that requires authorization. The OSAP creates an ephemeral secret that is used throughout the session instead of the entity AuthData secret. The ephemeral secret can be used to provide confidentiality for the introduction of new AuthData during the creation of new entities. Termination of the OSAP occurs in two ways. Either side can request session termination (as usual) but the TPM forces the termination of an OSAP session after use of the ephemeral secret for the introduction of new AuthData.

For both the OSAP and the OIAP, session setup is independent of the commands that are authorized. In the case of OIAP, the requestor sends the TPM_OIAP command, and with the response generated by the TPM, can immediately begin authorizing object actions. The OSAP is very similar, and starts with the requestor sending a TPM_OSAP operation, naming the entity to which the authorization session should be bound.

The DSAP session is to provide delegated authorization information.

All session types use a “rolling nonce” paradigm. This means that the TPM creates a new nonce value each time the TPM receives a command using the session.

Example OIAP and OSAP sessions are used to illustrate session setup and use. The fictitious command named TPM_Example occupies the place where an ordinary TPM command might be used, but does not have command specific parameters. The session connects to a key object within the TPM. The key contains AuthData that will be used to secure the session.

There could be as many as 2 authorization sessions applied to the execution of a single TPM command or as few as 0. The number of sessions used is determined by ISO/IEC 11889 1.2 Command Specification and is indicated by the command ordinal parameter.

It is also possible to secure authorization sessions using ephemeral shared-secrets. Rather than using AuthData contained in the stored object (e.g. key), the AuthData is supplied as a parameter to OSAP session creation. In the examples below the key.usageAuth parameter is replaced by the ephemeral secret.

End of informative comment

© ISO/IEC 2009 All rights reserved

Copyright International Organization for Standardization
Provided by IHS under license with ISO
No reproduction or networking permitted without license from IHS
Not for Resale

14.2 Parameter Declarations for OIAP and OSAP Examples

Start of informative comment

To follow OIAP and OSAP protocol examples (Table 14:c and
Table 14:d), the reader should become familiar with the parameters declared in Table 14:a and Table 14:b.

Several conventions are used in the parameter tables that may facilitate readability.

The Param column (Table 14:a) identifies the sequence in which parameters are packaged into a command or response message as well as the size in bytes of the parameter value. If this entry in the row is blank, that parameter is not included in the message. <> in the size column means that the size of the element is variable. It is defined either explicitly by the preceding parameter, or implicitly by the parameter type.

The HMAC column similarly identifies the parameters that are included in HMAC calculations. This column also indicates the default parameters that are included in the audit log. Exceptions are noted under the specific ordinal, e.g. TPM_ExecuteTransport.

The HMAC # column details the parameters used in the HMAC calculation. Parameters 1S, 2S, etc. are concatenated and hashed to inParamDigest or outParamDigest, implicitly called 1H1 and possibly 1H2 if there are two authorization sessions. For the first session, 1H1, 2H1, 3H1, and 4H1 are concatenated and HMAC'ed. For the second session, 1H2, 2H2, 3H2, and 4H2 are concatenated and HMAC'ed.

In general, key handles are not included in HMAC calculations. This allows a lower software layer to map the physical handle value generated by the TPM to a logical value used by an upper software layer. The upper layer generally holds the HMAC key and generates the HMAC. Excluding the key handle allows the mapping to occur without breaking the HMAC. It is important to use a different authorization secret for each key to prevent a man-in-the-middle from altering the key handle.

The Type column identifies the ISO/IEC 11889 data type corresponding to the passed value. An encapsulation of the parameter type is not part of the command message.

The Name column is a fictitious variable name that aids in following the examples and descriptions.

The double-lined row separator distinguishes authorization session parameters from command parameters. In Table 14:a the TPM_Example command has three parameters; keyHandle, inArgOne and inArgTwo. The tag, paramSize and ordinal parameters are message header values describing contents of a command message. The parameters below the double-lined row are OIAP / OSAP /DSAP or transport authorization session related. If a second authorization session were used, the table would show a second authorization section delineated by a second double-lined row. The authorization session parameters identify shared-secret values, session nonces, session digest and flags.

In this example, a single authorization session is used signaled by the TPM_TAG_RQU_AUTH1_COMMAND tag.

For an OIAP or transport session, the TPM_AUTHDATA description column specifies the HMAC key.

For an OSAP or DSAP session, the HMAC key is the shared secret that was calculated during the session setup, not the key specified in the description. The key specified in the description was previously used in the shared secret calculation.

© ISO/IEC 2009 – All rights reserved
Copyright International Organization for Standardization
Provided by IHS under license with ISO
No reproduction or networking permitted without license from IHS
Not for Resale

Param		HMAC		Type	Name	Description
#	Sz	#	Sz			
1	2			TPM_TAG	tag	TPM_TAG_RQU_AUTH1_COMMAND
2	4			UINT32	paramSize	Total number of input bytes including paramSize and tag
3	4	1S	4	TPM_COMMAND_CODE	ordinal	Command ordinal, fixed value of TPM_Example
4	4			TPM_KEY_HANDLE	keyHandle	Handle of a loaded key.
5	1	2S	1	BOOL	inArgOne	The first input argument
6	20	3S	20	UNIT32	inArgTwo	The second input argument.
7	4			TPM_AUTHHANDLE	authHandle	The authorization handle used for keyHandle authorization.
		2H1	20	TPM_NONCE	authLastNonceEven	Even nonce previously generated by TPM to cover inputs
8	20	3 H1	20	TPM_NONCE	nonceOdd	Nonce generated by system associated with authHandle
9	1	4 H1	1	BOOL	continueAuthSession	The continue use flag for the authorization handle
10	20			TPM_AUTHDATA	inAuth	The AuthData digest for inputs and keyHandle. HMAC key: key.usageAuth.

Table 14:a - Authorization Protocol Input Parameters

Param		HMAC		Type	Name	Description
#	Sz	#	Sz			
1	2			TPM_TAG	Tag	TPM_TAG_RSP_AUTH1_COMMAND
2	4			UINT32	paramSize	Total number of output bytes including paramSize and tag
3	4	1S	4	TPM_RESULT	returnCode	The return code of the operation. See section 4.3.
		2S	4	TPM_COMMAND_CODE	ordinal	Command ordinal, fixed value of TPM_Example
4	4	3S	4	UINT32	outArgOne	Output argument
5	20	2 H1	20	TPM_NONCE	nonceEven	Even nonce newly generated by TPM to cover outputs
		3 H1	20	TPM_NONCE	nonceOdd	Nonce generated by system associated with authHandle
6	1	4 H1	1	BOOL	continueAuthSession	Continue use flag, TRUE if handle is still active
7	20			TPM_AUTHDATA	resAuth	The AuthData digest for the returned parameters. HMAC key: key.usageAuth.

Table 14:b - Authorization Protocol Output Parameters

End of informative comment

--`,,```,,,,````-`-`,,`,,`,`,,`---

© ISO/IEC 2009 All rights reserved

Copyright International Organization for Standardization
Provided by IHS under license with ISO
No reproduction or networking permitted without license from IHS
Not for Resale

14.2.1 Object-Independent Authorization Protocol (OIAP)

Start of informative comment

The purpose of this section is to describe the authorization-related actions of a TPM when it receives a command that has been authorized with the OIAP protocol. OIAP uses the TPM_OIAP command to create the authorization session.

Many commands use OIAP authorization. The following description is therefore necessarily abstract. A fictitious TPM command, TPM_Example is used to represent ordinary TPM commands.

Assume that a TPM user wishes to send command TPM_Example. This is an authorized command that uses the key denoted by keyHandle. The user must know the AuthData for keyHandle (key.usageAuth) as this is the entity that requires authorization and this secret is used in the authorization calculation. Let us assume for this example that the caller of TPM_Example does not need to authorize the use of keyHandle for more than one command. This use model points to the selection of the OIAP as the authorization protocol.

For the TPM_Example command, the inAuth parameter provides the authorization to execute the command. The following table shows the commands executed, the parameters created and the wire formats of all of the information.

<inParamDigest> is the result of the following calculation: SHA1(ordinal, inArgOne, inArgTwo). <outParamDigest> is the result of the following calculation: SHA1(returnCode, ordinal, outArgOne). inAuthSetupParams refers to the following parameters, in this order: authLastNonceEven, nonceOdd, continueAuthSession. OutAuthSetupParams refers to the following parameters, in this order: nonceEven, nonceOdd, continueAuthSession

There are two even nonces used to execute TPM_Example, the one generated as part of the TPM_OAIP command (labeled authLastNonceEven below) and the one generated with the output arguments of TPM_Example (labeled as nonceEven below).

© ISO/IEC 2009 – All rights reserved
Copyright International Organization for Standardization
Provided by IHS under license with ISO
No reproduction or networking permitted without license from IHS
Not for Resale

Caller	On the wire	Dir	TPM
Send TPM_OIAP	TPM_OIAP	→	Create session Create authHandle Associate session and authHandle Generate authLastNonceEven Save authLastNonceEven with authHandle
Save authHandle, authLastNonceEven	authHandle, authLastNonceEven	←	Returns
Generate nonceOdd Compute inAuth = HMAC (key.usageAuth, inParamDigest, inAuthSetupParams) Save nonceOdd with authHandle			
Send TPM_Example	tag paramSize ordinal keyHandle inArgOne inArgTwo authHandle nonceOdd continueAuthSession inAuth	→	TPM retrieves key.usageAuth (key must have been previously loaded) Verify authHandle points to a valid session, mismatch returns TPM_E_INVALIDAUTH Retrieve authLastNonceEven from internal session storage HM = HMAC (key.usageAuth, inParamDigest, inAuthSetupParams) Compare HM to inAuth. If they do not compare return with TPM_E_INVALIDAUTH Execute TPM_Example and create returnCode Generate nonceEven to replace authLastNonceEven in session Set resAuth = HMAC(key.usageAuth, outParamDigest, outAuthSetupParams)
Save nonceEven HM = HMAC(key.usageAuth, outParamDigest, outAuthSetupParams) Compare HM to resAuth. This verifies returnCode and output parameters.	tag paramSize returnCode outArgOne nonceEven continueAuthSession resAuth	←	Return output parameters If continueAuthSession is FALSE then destroy session

Suppose now that the TPM user wishes to send another command using the same session. For the purposes of this example, we will assume that the same example command is used (ordinal = TPM_Example). However, a different key (newKey) with its own secret (newKey.usageAuth) is to be operated on. To re-use the previous session, the continueAuthSession output Boolean must be TRUE.

The previous example shows the command execution reusing an existing authorization session. The parameters created and the wire formats of all of the information.

In this case, authLastNonceEven is the nonceEven value returned by the TPM with the output parameters from the first protocol example.

© ISO/IEC 2009 – All rights reserved
--`,,```,,,,````-`-`,,`,,`,`,,`---
Copyright International Organization for Standardization
Provided by IHS under license with ISO
No reproduction or networking permitted without license from IHS
Not for Resale

Caller	On the wire	Dir	TPM
Generate nonceOdd Compute inAuth = HMAC (newKey.usageAuth, inParamDigest, inAuthSetupParams) Save nonceOdd with authHandle			
Send TPM_Example	tag paramSize ordinal keyHandle inArgOne inArgTwo nonceOdd continueAuthSession inAuth	→	TPM retrieves newKey.usageAuth (newKey must have been previously loaded) Retrieve authLastNonceEven from internal session storage HM = HMAC (newKey.usageAuth, inParamDigest, inAuthSetupParams) Compare HM to inAuth. If they do not compare return with TPM_E_INVALIDAUTH Execute TPM_Example and create returnCode Generate nonceEven to replace authLastNonceEven in session Set resAuth = HMAC(newKey.usageAuth, outParamDigest, outAuthSetupParams)
Save nonceEven HM = HMAC(newKey.usageAuth, outParamDigest, outAuthSetupParams) Compare HM to resAuth. This verifies returnCode and output parameters.	tag paramSize returnCode outArgOne nonceEven continueAuthSession resAuth	←	Return output parameters If continueAuthSession is FALSE then destroy session

The TPM user could then use the session for further authorization sessions. Suppose, however, that the TPM user no longer requires the authorization session. There are three possibilities in this case:

The user issues a TPM_Terminate_Handle command to the TPM (section 5.3).

The input argument continueAuthSession can be set to FALSE for the last command. In this case, the output continueAuthSession value will be FALSE.

In some cases, the TPM automatically terminates the authorization session regardless of the input value of continueAuthSession. In this case as well, the output continueAuthSession value will be FALSE.

When an authorization session is terminated for any reason, the TPM invalidates the session's handle and terminates the session's thread (releases all resources allocated to the session).

End of informative comment

Copyright International Organization for Standardization
Provided by IHS under license with ISO
No reproduction or networking permitted without license from IHS
Not for Resale
© ISO/IEC 2009 – All rights reserved

OIAP Actions

1. The TPM MUST verify that the authorization handle (H, say) referenced in the command points to a valid session. If it does not, the TPM returns the error code TPM_INVALID_AUTHHANDLE
2. The TPM SHALL retrieve the latest version of the caller's nonce (nonceOdd) and continueAuthSession flag from the input parameter list, and store it in internal TPM memory with the authSession 'H'.
3. The TPM SHALL retrieve the latest version of the TPM's nonce stored with the authorization session H (authLastNonceEven) computed during the previously executed command.
4. The TPM MUST retrieve the secret AuthData (SecretE, say) of the target entity. The entity and its secret must have been previously loaded into the TPM.
5. The TPM SHALL perform a HMAC calculation using the entity secret data, ordinal, input command parameters and authorization parameters according to previously specified normative regarding HMAC calculation.
6. The TPM SHALL compare HM to the AuthData value received in the input parameters. If they are different, the TPM returns the error code TPM_AUTHFAIL if the authorization session is the first session of a command, or TPM_AUTH2FAIL if the authorization session is the second session of a command. Otherwise, the TPM executes the command which (for this example) produces an output that requires authentication.
7. The TPM SHALL generate a nonce (nonceEven).
8. The TPM creates an HMAC digest to authenticate the return code, return values and authorization parameters to the same entity secret according to previously specified normative regarding HMAC calculation.
9. The TPM returns the return code, output parameters, authorization parameters and AuthData digest.
10. If the output continueUse flag is FALSE, then the TPM SHALL terminate the session. Future references to H will return an error.

--`,,```,,,,````-`-`,,`,,`,`,,`---
© ISO/IEC 2009 All rights reserved
Copyright International Organization for Standardization
Provided by IHS under license with ISO
No reproduction or networking permitted without license from IHS
Not for Resale

14.2.2 Object-Specific Authorization Protocol (OSAP)

Start of informative comment

This section describes the actions of a TPM when it receives a TPM command via OSAP session. Many TPM commands may be sent to the TPM via an OSAP session. Therefore, the following description is necessarily abstract.

The OSAP session is initialized through the creation of an ephemeral secret which is used to protect session traffic. Sessions are created using the TPM_OSAP command. This section illustrates OSAP using a fictitious command called TPM_Example.

Assume that a TPM user wishes to send the TPM_Example command to the TPM. The keyHandle signifies that an OSAP session is being used and has the value “Auth1”. The user must know the AuthData for keyHandle (key.usageAuth) as this is the entity that requires authorization and this secret is used in the authorization calculation.

Let us assume that the sender needs to use this key multiple times but does not wish to obtain the key secret more than once. This might be the case if the usage AuthData were derived from a typed password. This use model points to the selection of the OSAP as the authorization protocol.

For the TPM_Example command, the inAuth parameter provides the authorization to execute the command. The following table shows the commands executed, the parameters created and the wire formats of all of the information.

<inParamDigest> is the result of the following calculation: SHA1(ordinal, inArgOne, inArgTwo). <outParamDigest> is the result of the following calculation: SHA1(returnCode, ordinal, outArgOne). inAuthSetupParams refers to the following parameters, in this order: authLastNonceEven, nonceOdd, continueAuthSession. OutAuthSetupParams refers to the following parameters, in this order: nonceEven, nonceOdd, continueAuthSession

In addition to the two even nonces generated by the TPM (authLastNonceEven and nonceEven) that are used for TPM_OIAP, there is a third, labeled nonceEvenOSAP that is used to generate the shared secret. For every even nonce, there is also an odd nonce generated by the system.

© ISO/IEC 2009 – All rights reserved
Copyright International Organization for Standardization
Provided by IHS under license with ISO
No reproduction or networking permitted without license from IHS
Not for Resale

Caller	On the wire	Dir	TPM
Send TPM_OSAP	TPM_OSAP keyHandle nonceOddOSAP	→	Create session & authHandle Generate authLastNonceEven Save authLastNonceEven with authHandle Save the ADIP encryption scheme with authHandle Generate nonceEvenOSAP Generate sharedSecret = HMAC(key.usageAuth, nonceEvenOSAP, nonceOddOSAP) Save keyHandle, sharedSecret with authHandle
Save authHandle, authLastNonceEven Generate sharedSecret = HMAC(key.usageAuth, nonceEvenOSAP, nonceOddOSAP) Save sharedSecret	authHandle, authLastNonceEven nonceEvenOSAP	←	Returns
Generate nonceOdd & save with authHandle. Compute inAuth = HMAC (sharedSecret, inParamDigest, inAuthSetupParams)			
Send TPM_Example	tag paramSize ordinal keyHandle inArgOne inArgTwo authHandle nonceOdd continueAuthSession inAuth	→	Verify authHandle points to a valid session, mismatch returns TPM_AUTHFAIL Retrieve authLastNonceEven from internal session storage HM = HMAC (sharedSecret, inParamDigest, inAuthSetupParams) Compare HM to inAuth. If they do not compare return with TPM_AUTHFAIL Execute TPM_Example and create returnCode. If TPM_Example requires ADIP encryption, use the algorithm indicated when the OSAP session was set up. Generate nonceEven to replace authLastNonceEven in session Set resAuth = HMAC(sharedSecret, outParamDigest, outAuthSetupParams)
Save nonceEven HM = HMAC(sharedSecret, outParamDigest, outAuthSetupParams) Compare HM to resAuth. This verifies returnCode and output parameters.	tag paramSize returnCode outArgOne nonceEven continueAuthSession resAuth	←	Return output parameters If continueAuthSession is FALSE then destroy session

Table 14:c - Example OSAP Session

Suppose now that the TPM user wishes to send another command using the same session to operate on the same key. For the purposes of this example, we will assume that the same ordinal is to be used (TPM_Example). To re-use the previous session, the continueAuthSession output Boolean must be TRUE.

The following table shows the command execution, the parameters created and the wire formats of all of the information.

In this case, authLastNonceEven is the nonceEven value returned by the TPM with the output parameters from the first execution of TPM_Example.

--`,,```,,,,````-`-`,,`,,`,`,,`---
© ISO/IEC 2009 All rights reserved
Copyright International Organization for Standardization
Provided by IHS under license with ISO
No reproduction or networking permitted without license from IHS
Not for Resale

Caller	On the wire	Dir	TPM
Generate nonceOdd Compute inAuth = HMAC (sharedSecret, inParamDigest, inAuthSetupParams) Save nonceOdd with authHandle			
Send TPM_Example	tag paramSize ordinal keyHandle inArgOne inArgTwo nonceOdd continueAuthSession inAuth	→	Retrieve authLastNonceEven from internal session storage HM = HMAC (sharedSecret, inParamDigest, inAuthSetupParams) Compare HM to inAuth. If they do not compare return with TPM_AUTHFAIL Execute TPM_Example and create returnCode Generate nonceEven to replace authLastNonceEven in session Set resAuth = HMAC(sharedSecret, outParamDigest, outAuthSetupParams)
Save nonceEven HM = HMAC(sharedSecret, outParamDigest, outAuthSetupParams) Compare HM to resAuth. This verifies returnCode and output parameters.	tag paramSize returnCode outArgOne nonceEven continueAuthSession resAuth	←	Return output parameters If continueAuthSession is FALSE then destroy session

Table 14:d - Example Re-used OSAP Session

The TPM user could then use the session for further authorization sessions or terminate it in the ways that have been described above in TPM_OIAP. Note that termination of the OSAP session causes the TPM to destroy the shared secret.

End of informative comment

OSAP Actions

1. The TPM MUST have been able to retrieve the shared secret (Shared, say) of the target entity when the authorization session was established with TPM_OSAP. The entity and its secret must have been previously loaded into the TPM.
2. The TPM MUST verify that the authorization handle (H, say) referenced in the command points to a valid session. If it does not, the TPM returns the error code TPM_INVALID_AUTHHANDLE.
3. The TPM MUST calculate the HMAC (HM1, say) of the command parameters according to previously specified normative regarding HMAC calculation.
4. The TPM SHALL compare HM1 to the AuthData value received in the command. If they are different, the TPM returns the error code TPM_AUTHFAIL if the authorization session is the first session of a command, or TPM_AUTH2FAIL if the authorization session is the second session of a command., the TPM executes command C1 which produces an output (O, say) that requires authentication and uses a particular return code (RC, say).
5. The TPM SHALL generate the latest version of the even nonce (nonceEven).
6. The TPM MUST calculate the HMAC (HM2) of the return parameters according to previously specified normative regarding HMAC calculation.
7. The TPM returns HM2 in the parameter list.
8. The TPM SHALL retrieve the continue flag from the received command. If the flag is FALSE, the TPM SHALL terminate the session and destroy the thread associated with handle H.
9. If the shared secret was used to provide confidentiality for data in the received command, the TPM SHALL terminate the session and destroy the thread associated with handle H.
10. Each time that access to an entity (key) is authorized using OSAP, the TPM MUST ensure that the OSAP shared secret is that derived from the entity using TPM_OSAP.

© ISO/IEC 2009 – All rights reserved
Copyright International Organization for Standardization
Provided by IHS under license with ISO
No reproduction or networking permitted without license from IHS
Not for Resale

14.3 Authorization Session Handles

Start of informative comment

The TPM generates authorization handles to allow for the tracking of information regarding a specific authorization invocation.

The TPM saves information specific to the authorization, such as the nonce values, ephemeral secrets and type of authentication in use.

The TPM may create any internal representation of the handle that is appropriate for the TPM's design. The requestor always uses the handle in the authorization structure to indicate authorization structure in use.

The TPM must support a minimum of two concurrent authorization handles. The use of these handles is to allow the Owner to have an authorization active in addition to an active authorization for an entity.

To ensure garbage collection and the proper removal of security information, the requestor should terminate all handles. Termination of the handle uses the continue-use flag to indicate to the TPM that the handle should be terminated.

Termination of a handle instructs the TPM to perform garbage collection on all AuthData. Garbage collection includes the deletion of the ephemeral secret.

End of informative comment

1. The TPM MUST support authorization handles. See Section 24 Session pool.
2. The TPM MUST support authorization-handle termination. The termination includes secure deletion of all authorization session information.

--`,,```,,,,````-`-`,,`,,`,`,,`---

© ISO/IEC 2009 – All rights reserved

Copyright International Organization for Standardization
Provided by IHS under license with ISO
No reproduction or networking permitted without license from IHS
Not for Resale

14.4 Authorization-Data Insertion Protocol (ADIP)

Start of informative comment

The ADIP allows for the creation of new entities and the secure insertion of the new entity AuthData. The transmission of the new AuthData uses encryption with the key based on the shared secret of an OSAP session.

The creation of AuthData is the responsibility of the entity owner. He or she may use whatever process he or she wishes. The transmission of the AuthData from the entity owner to the TPM requires confidentiality and integrity. These requirements assume the insertion of the AuthData occurs over a network. While local insertion of the data would not require these measures, the protocol is established to be consistent with both local and remote insertions. The confidentiality of the transmission comes from the encryption of the AuthData. The integrity comes from the OSAP session HMAC.

When the requestor is sending the AuthData to the TPM, the command requires the authorization of the entity parent. For example, to create a new TPM identity key and set its AuthData requires the AuthData of the TPM Owner. To create a new wrapped key requires the AuthData of the parent key.

The creation of a new entity requires the authorization of the entity owner. When the requestor starts the creation process, the creator must establish an OSAP session using the parent of the new entity.

For the mandatory XOR encryption algorithm, the creator builds an encryption key using a SHA-1 hash of the OSAP shared secret and a session nonce. The creator XOR encrypts the new AuthData using the encryption key as a one-time pad and sends this encrypted data along with the creation request to the TPM. The TPM decrypts the AuthData using the same OSAP shared secret and session nonce.

The XOR encryption algorithm is sufficient for almost all use models. There may be additional use models where a different encryption algorithm would be beneficial. The TPM may support AES as an additional encryption algorithm. The key and IV or counter use the OSAP shared secret and session nonces.

The creator believes that the OSAP creates a shared secret known only to the creator and the TPM. The TPM believes that the creator is the entity owner by their knowledge of the parent entity AuthData. The creator believes that the process completed correctly and that the AuthData is correct because the HMAC will only verify with the OSAP shared secret.

In the following example, we want to send the previously described command TPM_EXAMPLE to create a new entity. In the example, we assume there is a third input parameter encAuth, and that one of the input parameters is named parentHandle to reference the parent for the new entity (e.g., the SRK and its children).

© ISO/IEC 2009 – All rights reserved
Copyright International Organization for Standardization
Provided by IHS under license with ISO
No reproduction or networking permitted without license from IHS
Not for Resale

Caller	On the wire	Dir	TPM
Send TPM_OSAP	TPM_OSAP parentHandle nonceOddOSAP	→	Create session & authHandle Generate authLastNonceEven Save authLastNonceEven with authHandle Save the ADIP encryption scheme with authHandle Generate nonceEvenOSAP Generate sharedSecret = HMAC(parent.usageAuth, nonceEvenOSAP, nonceOddOSAP) Save parentHandle, sharedSecret with authHandle
Save authHandle, authLastNonceEven Generate sharedSecret = HMAC(parent.usageAuth, nonceEvenOSAP, nonceOddOSAP) Save sharedSecret	authHandle, authLastNonceEven nonceEvenOSAP	←	Returns
Generate nonceOdd & save with authHandle. Compute input parameter encAuth = XOR(entityAuthData, SHA1(sharedSecret, authLastNonceEven)) Compute inAuth = HMAC (sharedSecret, inParamDigest, inAuthSetupParams)			
Send TPM_Example	tag paramSize ordinal parentHandle inArgOne inArgTwo encAuth authHandle nonceOdd continueAuthSession inAuth	→	Verify authHandle points to a valid session, mismatch returns TPM_AUTHFAIL Retrieve authLastNonceEven from internal session storage HM = HMAC (sharedSecret, inParamDigest, inAuthSetupParams) Compare HM to inAuth. If they do not compare return with TPM_AUTHFAIL Execute TPM_Example: decrypt encAuth to entityAuth, create entity and build returnCode. Use the ADIP encryption scheme indicated when the OSAP session was set up. Generate nonceEven to replace authLastNonceEven in session Set resAuth = HMAC(sharedSecret, outParamDigest, outAuthSetupParams)
Save nonceEven HM = HMAC(sharedSecret, outParamDigest, outAuthSetupParams) Compare HM to resAuth. This verifies returnCode and output parameters.	tag paramSize returnCode outArgOne nonceEven continueAuthSession resAuth	←	Return output parameters Terminate the authorization session associated with authHandle

Table 14:e - Example ADIP Session

End of informative comment

© ISO/IEC 2009 All rights reserved

Copyright International Organization for Standardization
Provided by IHS under license with ISO
No reproduction or networking permitted without license from IHS
Not for Resale

1. The TPM MUST enable ADIP by using the OSAP or DSAP
   a. The upper byte of the entity type indicates the encryption scheme.
   b. The TPM internally stores the encryption scheme as part of the session and enforces the encryption choice on the subsequent use of the session.
   c. When TPM_ENTITY_TYPE is used for ordinals other than TPM_OSAP or TPM_DSAP (i.e., for cases where there is no ADIP encryption action), the TPM_ENTITY_TYPE upper byte MUST be 0x00.
2. The TPM MUST destroy the session whenever a new entity AuthData is created.
3. The TPM MUST encrypt the AuthData for the new entity.
   a. The TPM MUST support the XOR encryption scheme.
   b. The TPM MAY support AES symmetric key encryption schemes.
      i. If TPM_PERMANENT_FLAGS -> FIPS is TRUE
         1. All encrypted authorizations MUST use a symmetric key encryption scheme.
   c. Encrypted AuthData values occur in the following commands
      i. TPM_CreateWrapKey
      ii. TPM_ChangeAuth
      iii. TPM_ChangeAuthOwner
      iv. TPM_Seal
      v. TPM_Sealx
      vi. TPM_MakeIdentity
      vii. TPM_CreateCounter
      viii. TPM_CMK_CreateKey
      ix. TPM_NV_DefineSpace
         1. This ordinal contains a special case where no encryption is used.
      x. TPM_Delegate_CreateKeyDelegation
      xi. TPM_Delegate_CreateOwnerDelegation
4. If the entity type indicates XOR encryption for the AuthData secret
   a. Create X1 the SHA-1 of the concatenation of (authHandle -> sharedSecret || authLastNonceEven).
   b. Create the decrypted AuthData the XOR of X1 and the encrypted AuthData.
   c. If the command ordinal contains a second AuthData2 secret (e.g. TPM_CreateWrapKey)
      i. Create X2 the SHA-1 of the concatenation of (authHandle -> sharedSecret || nonceOdd).
      ii. Create the decrypted AuthData2 the XOR of X2 and the encrypted AuthData2.
5. If the entity type indicates symmetric key encryption
   a. The key for the encryption algorithm is the first bytes of the OSAP shared secret.
      i. E.g., For AES128, the key is the first 16 bytes of the OSAP shared secret.
      ii. There is no support for AES keys greater than 128 bits.

© ISO/IEC 2009 – All rights reserved
Copyright International Organization for Standardization
Provided by IHS under license with ISO
No reproduction or networking permitted without license from IHS
Not for Resale

b. If the entity type indicates CTR mode

   i. The initial counter value for AuthData is the first bytes of authLastNonceEven.

      1. E.g., For AES128, the initial counter value is the first 16 bytes of authLastNonceEven.

   ii. If the command ordinal contains a second AuthData2 secret (e.g. TPM_CreateWrapKey)

      1. The initial counter value for AuthData2 is the first bytes of nonceOdd.

   iii. Additional counter values as required are generated by incrementing the counter value as described in 32.1.3 TPM_ES_SYM_CTR.

Start of informative comment

The method of incrementing the counter value is different from that used by some standard crypto libraries (e.g. openSSL, Java JCE) that increment the entire counter value. TPM users should be aware of this to avoid errors when the counter wraps.

End of informative comment

--`,,```,,,,````-`-`,,`,,`,`,,`---

© ISO/IEC 2009 – All rights reserved

Copyright International Organization for Standardization
Provided by IHS under license with ISO
No reproduction or networking permitted without license from IHS
Not for Resale

14.5 AuthData Change Protocol (ADCP)

Start of informative comment

All entities from the Owner to the SRK to individual keys and data blobs have AuthData. This data may need to change at some point in time after the entity creation. The ADCP allows the entity owner to change the AuthData. The entity owner of a wrapped key is the owner of the parent key.

A requirement is that the owner must remember the old AuthData. The only mechanism to change the AuthData when the entity owner forgets the current value is to delete the entity and then recreate it.

To protect the data from exposure to eavesdroppers or other attackers, the AuthData uses the same encryption mechanism in use during the ADIP.

Changing AuthData requires opening two authentication handles. The first handle authenticates the entity owner (or parent) and the right to load the entity. This first handle is an OSAP and supplies the data to encrypt the new AuthData according to the ADIP protocol. The second handle can be either an OIAP or an OSAP, it authorizes access to the entity for which the AuthData is to be changed.

The AuthData in use to generate the OSAP shared secret must be the AuthData of the parent of the entity to which the change will be made.

When changing the AuthData for the SRK, the first handle OSAP must be setup using the TPM Owner AuthData. This is because the SRK does not have a parent, per se.

If the SRKAuth data is known to userA and userB, userA can snoop on userB while userB is changing the AuthData for a child of the SRK, and deduce the child's newAuth. Therefore, if SRKAuth is a well known value, TPM_ChangeAuthAsymStart and TPM_ChangeAuthAsymFinish are preferred over TPM_ChangeAuth when changing AuthData for children of the SRK.

This applies to all children of the SRK, including TPM identities.

End of informative comment

6. Changing AuthData for the TPM SHALL require authorization of the current TPM Owner.
7. Changing AuthData for the SRK SHALL require authorization of the TPM Owner.
8. If SRKAuth is a well known value, TPM_ChangeAuth SHOULD NOT be used to change the AuthData value of a child of the SRK, including the TPM identities.
9. All other entities SHALL require authorization of the parent entity.

© ISO/IEC 2009 – All rights reserved
Copyright International Organization for Standardization
Provided by IHS under license with ISO
No reproduction or networking permitted without license from IHS
Not for Resale

14.6 Asymmetric Authorization Change Protocol (AACP)

Start of informative comment

This is now deprecated. Use the normal change session inside of a transport session with confidentiality.

This asymmetric change protocol allows the entity owner to change entity authorization, under the parent's execution authorization, to a value of which the parent has no knowledge.

In contrast, the TPM_ChangeAuth command uses the parent entity AuthData to create the shared secret that encrypts the new AuthData for an entity. This creates a situation where the parent entity ALWAYS knows the AuthData for entities in the tree below the parent. There may be instances where this knowledge is not a good policy.

This asymmetric change process requires two commands and the use of an authorization session.

End of informative comment

1. Changing AuthData for the SRK SHALL involve authorization by the TPM Owner.
2. If SRKAuth is a well known value,
   a. TPM_ChangeAuthAsymStart and TPM_ChangeAuthAsymFinish SHOULD be used to change the AuthData value of a child of the SRK, including the TPM identities.
3. All other entities SHALL involve authorization of the parent entity.

© ISO/IEC 2009 – All rights reserved

Copyright International Organization for Standardization
Provided by IHS under license with ISO
No reproduction or networking permitted without license from IHS
Not for Resale

15. ISO/IEC 19790 Evaluations

Start of informative comment

The ISO/IEC 19790 program provides assurance that a cryptographic device performs properly. It is appropriate for TPM vendors to attempt to obtain ISO/IEC 19790 evaluations.

The TPM design should be such that the TPM vendor has the opportunity of obtaining a successful ISO/IEC 19790 evaluation.

There is no requirement for a TPM implementation to obtain an ISO/IEC 19790 certification, the purpose of this information is to inform the implementer of any issues when attempting to obtain the evaluation.

End of informative comment

15.1 TPM Profile for successful ISO/IEC 19790 evaluation

Start of informative comment

FIPS mode, a term defined to indicate a more restrictive mode of operation, does require some changes over the normal TPM. These changes are listed here such that there is a central point of determining the necessary changes for a successful evaluation.

Key creation and use

TPM_LoadKey, TPM_CMK_CreateKey and TPM_CreateWrapKey changed to disallow the creation or loading of TPM_AUTH_NEVER, legacy and keys less than 1024 bits. TPM_MakeIdentity changed to disallow TPM_AUTH_NEVER.

End of informative comment

1. When the designers of a TPM are attempting to obtain external certification, like ISO/IEC 19790, each TPM Protected Capability MUST be designed such that some profile of the capability is capable of obtaining the external certification

Copyright International Organization for Standardization
Provided by IHS under license with ISO
No reproduction or networking permitted without license from IHS
Not for Resale
© ISO/IEC 2009 – All rights reserved

16. Maintenance

Start of informative comment

The maintenance feature is a vendor-specific feature, and its implementation is vendor-specific. The implementation must, however, meet the minimum security requirements so that implementations of the maintenance feature do not result in security weaknesses.

There is no requirement that the maintenance feature is available, but if it is implemented, then the requirements must be met.

The maintenance feature described in the specification is an example only, and not the only mechanism that a manufacturer could implement that meets these requirements.

Maintenance is different from backup/migration, because maintenance provides for the migration of both migratory and non-migratory data. Maintenance is an optional TPM function, but if a TPM enables maintenance, the maintenance capabilities in ISO/IEC 11889 are mandatory – no other migration capabilities shall be used. Maintenance necessarily involves the manufacturer of a Subsystem.

When maintaining computer systems, it is sometimes the case that a manufacturer or its representative needs to replace a Subsystem containing a TPM. Some manufacturers consider it a requirement that there be a means of doing this replacement without the loss of the non-migratable keys held by the original TPM.

The owner and users of ISO/IEC 11889 platforms need assurance that the data within protected storage is adequately protected against interception by third parties or the manufacturer.

This process MUST only be performed between two platforms of the same manufacturer and model. If the maintenance feature is supported, this section defines the required functions defined at a high level. The final function definitions and entire maintenance process is left to the manufacturer to define within the constraints of these high level functions.

Any maintenance process must have certain properties. Specifically, any migration to a replacement Subsystem must require collaboration between the Owner of the existing Subsystem and the manufacturer of the existing Subsystem. Further, the procedure must have adequate safeguards to prevent a non-migrational key being transferred to multiple Subsystems.

The maintenance capabilities TPM_CreateMaintenanceArchive and TPM_LoadMaintenanceArchive enable the transfer of all Protected Storage data from a Subsystem containing a first TPM (TPM_1) to a Subsystem containing a second TPM (TPM_2):

A manufacturer places a public key in non-volatile storage into its TPMs at manufacture time.

The Owner of TPM_1 uses TPM_CreateMaintenanceArchive to create a maintenance archive that enables the migration of all data held in Protected Storage by TPM_1. The Owner of TPM_1 must provide his or her authorization to the Subsystem. The TPM then creates the TPM_MIGRATE_ASYMKEY structure and follows the process defined.

The XOR process prevents the manufacturer from ever obtaining plaintext TPM_1 data.

The additional random data provides a means to assure that a maintenance process cannot subvert archive data and hide such subversion.

The random mask can be generated by two methods, either using the TPM RNG or MGF1 on the TPM Owners AuthData.

© ISO/IEC 2009 – All rights reserved

Copyright International Organization for Standardization
Provided by IHS under license with ISO
No reproduction or networking permitted without license from IHS
Not for Resale

The manufacturer takes the maintenance blob, decrypts it with its private key, and satisfies itself that the data bundle represents data from that Subsystem manufactured by that manufacturer. Then the manufacturer checks the endorsement certificate of TPM_2 and verifies that it represents a platform to which data from TPM_1 may be moved.

The manufacturer dispatches two messages.

The first message is made available to CAs, and is a revocation of the TPM_1 endorsement certificate.

The second message is sent to the Owner of TPM_2, which will communicate the SRK, tpmProof and the manufacturer's permission to install the maintenance blob only on TPM_2

The Owner uses TPM_LoadMaintenanceArchive to install the archive copy into TPM_2, and overwrite the existing TPM_2-SRK and TPM_2-tpmProof in TPM_2. TPM_2 overwrites TPM_2-SRK with TPM_1-SRK, and overwrites TPM_2-tpmProof with TPM_1-tpmProof.

Note that the command TPM_KillMaintenanceFeature prevents the operation of TPM_CreateMaintenanceArchive and TPM_LoadMaintenanceArchive. This enables an Owner to block maintenance (and hence the migration of non-migratory data) either to or from a TPM.

It is required that a manufacturer takes steps that prevent further access of migrated data by TPM_1. This may be achieved by deleting the existing Owner from TPM_1, for example.

For the manufacturer to validate that the maintenance blob is coming from a valid TPM, the manufacturer can require that a TPM identity sign the maintenance blob. The identity would be from a CA under the control of the manufacturer and hence the manufacturer would be satisfied that the blob is from a valid TPM.

End of informative comment

1. The maintenance feature MUST ensure that the information can be on only one TPM at a time. Maintenance MUST ensure that at no time the process will expose a shielded location. Maintenance MUST require the active participation of the Owner.
2. Any migration of non-migratory data protected by a Subsystem SHALL require the cooperation of both the Owner of that non-migratory data and the manufacturer of that Subsystem. That manufacturer SHALL NOT cooperate in a maintenance process unless the manufacturer is satisfied that non-migratory data will exist in exactly one Subsystem. A TPM SHALL NOT provide capabilities that support migration of non-migratory data unless those capabilities are described in the ISO/IEC 11889 specification.
3. The maintenance feature MUST move the following
4. TPM_KEY for SRK. The maintenance process will reset the SRK AuthData to match the TPM Owners AuthData
5. TPM_PERMANENT_DATA -> tpmProof
6. TPM Owner's authorization

© ISO/IEC 2009 – All rights reserved
Copyright International Organization for Standardization
Provided by IHS under license with ISO
No reproduction or networking permitted without license from IHS
Not for Resale

16.1 Field Upgrade

Start of informative comment

A TPM, once in the field, may need to update the protected capabilities. This command, which is optional, provides the mechanism to perform the update.

End of informative comment

The TPM SHOULD have provisions for upgrading the subsystem after shipment from the manufacturer. If provided the mechanism MUST implement the following guidelines:

1. The upgrade mechanisms in the TPM MUST not require the TPM to hold a global secret. The definition of global secret is a secret value shared by more than one TPM.
2. The TPM is not allowed to pre-store or use unique identifiers in the TPM for the purpose of field upgrade. The TPM MUST NOT use the endorsement key for identification or encryption in the upgrade process. The upgrade process MAY use a TPM Identity (AIK) to deliver upgrade information to specific TPM devices.
3. The upgrade process can only change protected-capabilities.
4. The upgrade process can only access data in shielded-locations where this data is necessary to validate the TPM Owner, validate the TPME and manipulate the blob
5. The TPM MUST conform to the ISO/IEC 11889 specification, protection profiles and security targets after the upgrade. The upgrade MAY NOT decrease the security values from the original security target.
6. The security target used to evaluate this TPM MUST include this command in the TOE.

--`,,```,,,,````-`-`,,`,,`,`,,`---

© ISO/IEC 2009 – All rights reserved

Copyright International Organization for Standardization
Provided by IHS under license with ISO
No reproduction or networking permitted without license from IHS
Not for Resale

17. Proof of Locality

Start of informative comment

When a platform is designed with a trusted process, the trusted process may wish to communicate with the TPM and indicate that the command is coming from the trusted process. The definition of a trusted process is a platform specific issue.

The commands that the trusted process sends to the TPM are the normal TPM commands with a modifier that indicates that the trusted process initiated the command. The TPM accepts the command as coming from the trusted process merely because the modifier is set. The TPM itself is not responsible for how the signal is asserted; only that it honors the assertions. The TPM cannot verify the validity of the modifier.

The definition of the modifier is a platform specific issue. Depending on the platform, the modifier could be a special bus cycle or additional input pins on the TPM. The assumption is that spoofing the modifier to the TPM requires more than just a simple hardware attack, but would require expertise and possibly special hardware. One example would be special cycles on the LPC bus that inform the TPM it is under the control of a process on the PC platform.

To allow for multiple mechanisms and for finer grained reporting, the TPM will include 4 locality modifiers. These four modifiers allow the platform specific specification to properly indicate exactly what is occurring and for TPM's to properly respond to locality.

End of informative comment

1. The TPM modifies the receipt of a command and indicates that the trusted process sent the command when the TPM determines that the modifier is on. The modifier MUST only affect the individual command just received and MUST NOT affect any other commands. However, TPM_ExecuteTransport MUST propagate the modifier to the wrapped command.
2. A TPM platform specific specification MAY indicate the presence of a maximum of 4 local modifiers. The modifier indication uses the TPM_MODIFIER_INDICATOR data type.
3. The received modifier MUST indicate a single level.
4. The definition of the trusted source is in the platform specific specification.
5. For ease in reading ISO/IEC 11889 the indication that the TPM has received any modifier will be LOCAL_MOD = TRUE.

© ISO/IEC 2009 – All rights reserved
Copyright International Organization for Standardization
Provided by IHS under license with ISO
No reproduction or networking permitted without license from IHS
Not for Resale

18. Monotonic Counter

Start of informative comment

The monotonic counter provides an ever-increasing incremental value. The TPM must support at least 4 concurrent counters. Implementations inside the TPM may create 4 unique counters or there may be one counter with pointers to keep track of the pointers current value. A naming convention to allow for unambiguous reference to the various components the following terms are in use:

Internal Base – This is the main counter. It is in use internally by the TPM and is not directly accessible by any outside process.

External Counter – A counter in use by external processes. This could be related to the main counter via pointers and difference values or it could be a totally unique value. The value of an external counter is not affected by any use, increment or deletion of any other external counter.

Max Value – The max count value of all counters (internal and external). So if there were 3 external counters having values of 10, 15 and 201 and the internal base having a value of 201 then Max Value is 201. In the same example if the internal base was 502 then Max Value would be 502.

There are two methods of obtaining an external count, signed or unsigned. The external counter must allow for 7 years of increments every 5 seconds without causing a hardware failure. The output of the counter is a 32-bit value.

The TPM may create a throttling mechanism that limits the ability to increment an external counter within a certain time range. The TPM must support an increment rate of once every 5 seconds.

To create an external counter requires TPM Owner authorization. To increment an external counter the command must pass authorization to use the counter.

External counters can be tagged with a short text string to facilitate counter administration.

Manufacturers are free to implement the monotonic counter using any mechanism.

To illustrate the counters and base the following example is in use. This mechanism uses two saving values (diff and start), however this is only an example and not meant to indicate any specific implementation.



The internal base (IB) always moves forward and can never be reset. IB drives all external counters on the machine.

© ISO/IEC 2009 All rights reserved
Copyright International Organization for Standardization
Provided by IHS under license with ISO
No reproduction or networking permitted without license from IHS
Not for Resale

The purpose of the following example is to show the two external counters always moving forward independent of the other and how the IB moves forward also.

Starting condition is that IB is at 22 and no other external counters are active.

Start external counter A

Increment IB (set new Max Value) IB = 23

Assign start value of A to 23 (or Max Value)

Assign difference of A to 23 (we always start at current value of IB)

Assign a handle for A

Increment A 5 times

IB is now 28

Request current A value

Return 28 = 28 (IB) + 23 (difference) – 23 (start value)

Counter A has gone from the start of 23 to 28 incremented 5 times.

TPM_Startup(ST_CLEAR)

Start Counter B

Save A difference 28 = 23 (old difference) + 28 (IB) – 23 (start value)

Increment IB (set new Max Value) IB = 29

Set start value of B to 29 (or Max Value)

Assign difference of B to 29

Assign handle for B

Increment B 8 times

IB is now 37

Request B value

Return 37 = 37 (IB) + 29 (difference) – 29 (start value)

TPM_Startup(ST_CLEAR)

Increment A

Store B difference (37)

Load A start value of 37

Increment IB to 38

Return A value

Return 29 = 38 (IB) + 28 (difference) – 37 (start value)

Notice that A has gone from 28 to 29 which is correct, while B is at 37. Depending on the order of increments A may pass B or it may always be less than B.

End of informative comment

© ISO/IEC 2009 – All rights reserved
Copyright International Organization for Standardization
Provided by IHS under license with ISO
No reproduction or networking permitted without license from IHS
Not for Resale

1. The counter MUST be designed to not wear out in the first 7 years of operation. The counter MUST be able to increment at least once every 5 seconds. The TPM, in response to operations that would violate these counter requirements, MAY throttle the counter usage (cause a delay in the use of the counter) or return the error TPM_E_COUNTERUSAGE.
2. The TPM MUST support at least 4 concurrent counters.
3. The establishment of a new counter MUST prevent the reuse of any previous counter value. I.E. if the TPM has 3 counters and the max value of a current counter is at 36 then the establishment of a new counter would start at 37.
4. After a successful TPM_Startup(ST_CLEAR) the first successful TPM_IncrementCounter sets the counter handle. Any attempt to issue TPM_IncrementCounter with a different handle MUST fail.
5. TPM_CreateCounter does NOT set the counter handle.

--`,,```,,,,````-`-`,,`,,`,`,,`---

© ISO/IEC 2009 – All rights reserved

Copyright International Organization for Standardization
Provided by IHS under license with ISO
No reproduction or networking permitted without license from IHS
Not for Resale

19. Transport Protection

Start of informative comment

The creation of sessions allows for the grouping of a set of commands into a session. The session provides a log of all commands and can provide confidentiality of the commands using the session.

Session establishment creates a shared secret and then uses the shared secret to authorize and protect commands sent to the TPM using the session.

After establishing the session, the caller uses the session to wrap a command to execute. The user of the transport session can wrap any command except for commands that would create nested transport sessions.

The log of executed commands uses a structure that includes the parameters and current tick count. The session log provides a record of each command using the session.

The transport session uses the same rolling nonce protocol that authorization sessions use. This protocol defines two nonces for each command sent to the TPM; nonceOdd provided by the caller and nonceEven generated by the TPM.

For confidentiality, the caller can use the MGF1 function to create an XOR string the same size as the command to execute. The inputs to the MGF1 function are the shared secret, nonceOdd and nonceEven. A symmetric key encryption algorithm can also be specified.

There is no explicit close session as the caller can use the continueSession flag set to false to end a session. The caller can also call the sign session log, which also ends the session. If the caller losses track of which sessions are active the caller should use the flush commands to regain control of the TPM resources.

For an attacker to successfully break the encryption the attacker must be able to determine from a few bits what an entire SHA-1 output was. This is equivalent to breaking SHA-1. The reason that the attacker will know some bits is that the commands are in a known format. This then allows the attacker to determine what the XOR bits were. Knowledge of 159 bits of the XOR stream does not provide any greater that 50% probability of knowing the 160th bit.

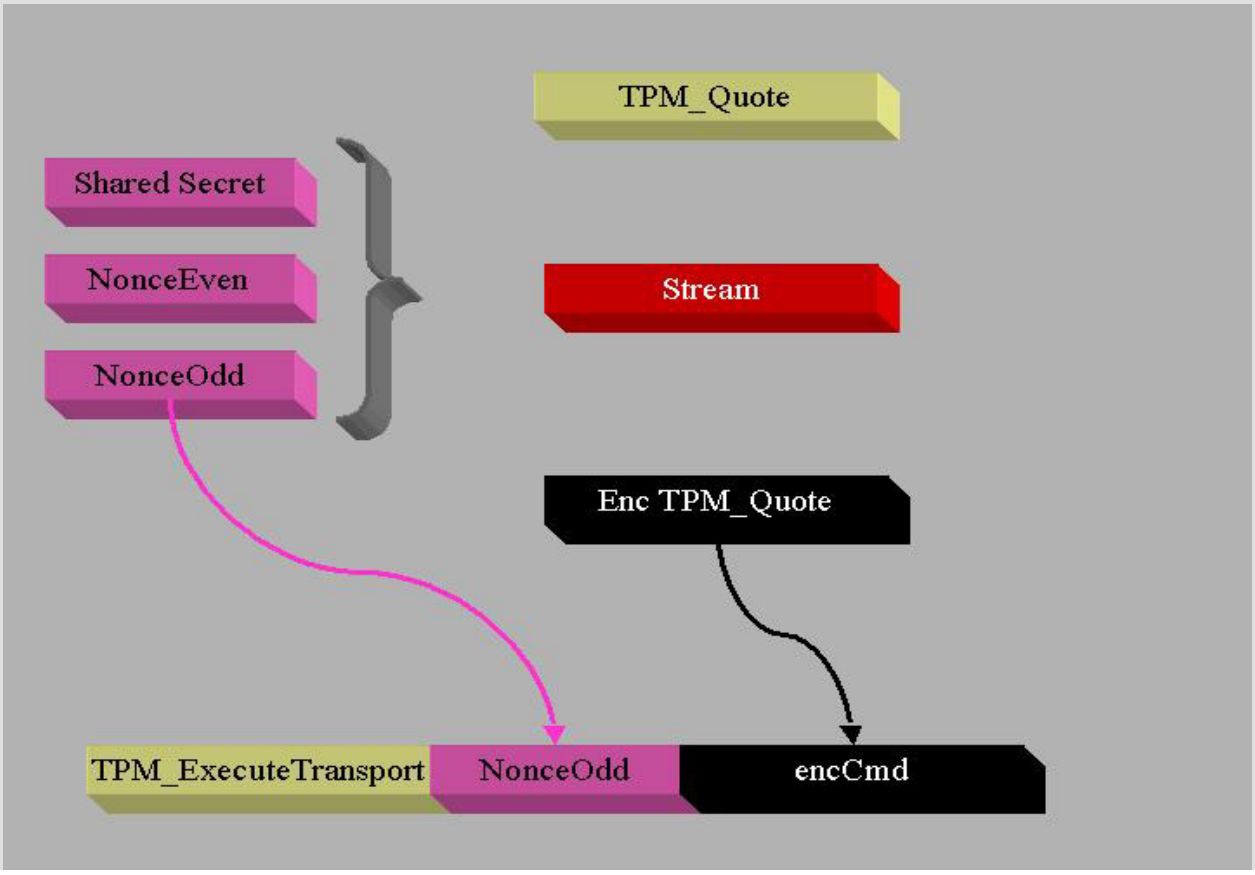

© ISO/IEC 2009 – All rights reserved
Copyright International Organization for Standardization
Provided by IHS under license with ISO
No reproduction or networking permitted without license from IHS
Not for Resale

This picture shows the protection of a TPM_Quote command. Previously executed was session establishment. The nonces in use for the TPM_Quote have no relationship with the nonces that are in use for the TPM_ExecuteTransport command.

End of informative comment

1. The TPM MUST support a minimum of one transport session.
2. The TPM MUST NOT support the nesting of transport sessions. The definition of nesting is attempting to execute a wrapped command that is a transport session command. So for example when executing TPM_ExecuteTransport the wrapped command MUST not be TPM_ExecuteTransport.
3. The TPM MUST ensure that if transport logging is active that the inclusion of the tick count in the session log does not provide information that would make a timing attack on the operations using the session more successful.
4. The transport session MAY be exclusive. Any command executed outside of the exclusive transport session MUST cause the invalidation of the exclusive transport session.
   a. The TPM_ExecuteTransport command specifying the exclusive transport session is the only command that does not terminate the exclusive session.
5. It MAY be ineffective to wrap TPM_SaveState in a transport session. Since the TPM MAY include transport sessions in the saved state, the saved state MAY be invalidated by the wrapping TPM_ExecuteTransport.

19.1 Transport encryption and authorization

Start of informative comment

The confidentially of the transport protection is provided by a encrypting the wrapped command. Encryption of various items in the wrapped command makes resource management of a TPM impossible. For this reason, encryption of the entire command is not possible. In addition to the encryption issue, there are difficulties with creating the HMAC for the TPM_ExecuteTransport authorization.

The solution to these problems is to provide limited encryption and HMAC information.

The HMAC will only include two areas from the wrapped command, the command header information up to the handles, and the data after the handles. The format of all TPM commands is such that all handles are in the data stream prior to the payload or data. After the data comes the authorization information. To enable resource management, the HMAC for TPM_ExecuteTransport only includes the ordinal, header information and the data. The HMAC does not include handles and the authorization handles and nonces.

The exception is TPM_OwnerReadInternalPub, which uses fixed value key handles that are included in the encryption and HMAC calculation.

--`,,```,,,,````-`-`,,`,,`,`,,`---

© ISO/IEC 2009 All rights reserved

Copyright International Organization for Standardization
Provided by IHS under license with ISO
No reproduction or networking permitted without license from IHS
Not for Resale

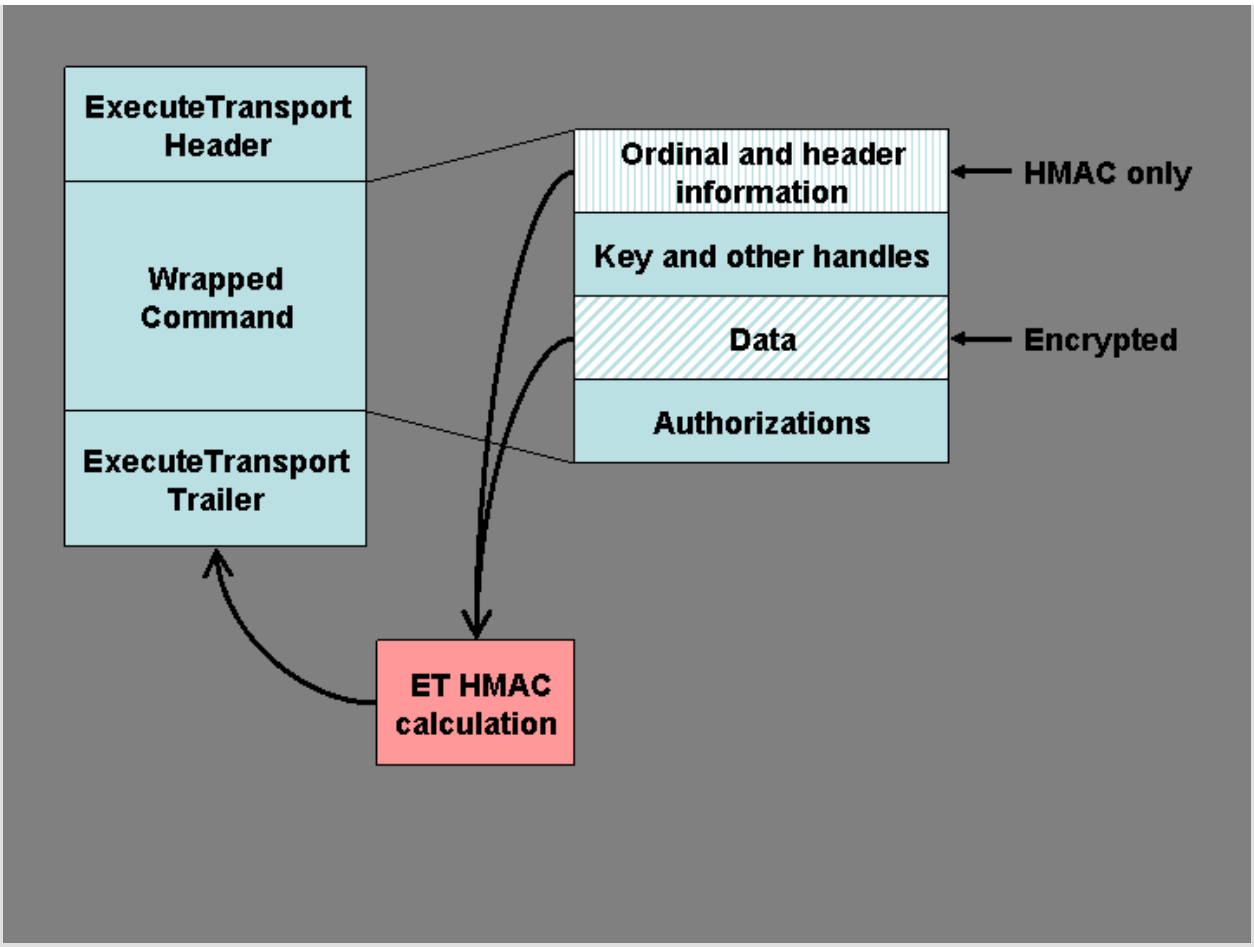

A more exact representation of the execute transport command would be the following

```
*********************************************
* TAGet | LENet | ORDet | wrappedCmd | AUTHet *
*********************************************
```

wrappedCmd looks like

```
*****************************************************************
* TAGw | LENw | ORDw | HANDLESw | DATAw | AUTH1w (o) | AUTH2w (o) *
*****************************************************************
```

A more exact representation of the execute transport response would be the following

```
*********************************************
* TAGet | LENet | RCet | wrappedRsp | AUTHet *
*********************************************
```

wrappedRsp looks like

```
*****************************************************************
* TAGw | LENw | RCw | HANDLESw | DATAw | AUTH1w (o) | AUTH2w (o) *
*****************************************************************
```

The calculation for AUTHet takes as the data component of the HMAC calculation the concatenation of ORDw and DATAw. A normal HMAC calculation would have taken the entire wrappedCmd value but for the executeTransport calculation only the above two values are active. This does require the executeTransport command to parse the wrappedCmd to find the appropriate values.

© ISO/IEC 2009 – All rights reserved
Copyright International Organization for Standardization
Provided by IHS under license with ISO
No reproduction or networking permitted without license from IHS
Not for Resale

The data for the command HMAC calculation is the following:

H1 = SHA-1 (ORDw || DATAw)

inParamDigest = SHA-1 (ORDet || wrappedCmdSize || H1)

AUTHet = HMAC (inParamDigest || lastNonceEven(et) || nonceOdd(et) || continue(et))

The data for the response HMAC calculation is the following:

H2 = SHA-1 (RCw || ORDw || DATAw)

outParamDigest = SHA-1 (RCet || ORDet || currentTicks || locality || wrappedRspSize || H1)

AUTHet = HMAC (outParamDigest || nonceEven(et) || nonceOdd(et) || continue(et))

DATAw is the unencrypted data. wrappedCmdSize and wrappedRspSize ares the actual size of the DATAw area and not the size of H1 or H2.

End of informative comment

The TPM MUST release a transport session and all information related to the session when:

1. TPM_ReleaseTransportSigned is executed
2. TPM_ExecuteTransport is executed with continueTransSession set to FALSE
3. Any failure of the integrity check during execution of TPM_ExecuteTransport
4. If the session has TPM_TRANSPORT_LOG set and the TPM tick session is interrupted for any reason. This is due to the return of tick values without the nonces associated with the session.
5. The TPM executes some command that deactivates the TPM or removes the TPM Owner or EK.

19.1.1 MGF1 parameters

Start of informative comment

MGF1 provides the confidentiality for the transport session. MGF1 is a function from P1363. This function provides a mechanism to distribute entropy over a large sequence. The sequence provides a value to XOR over the message. This in effect creates a stream cipher but not one that is available for bulk encryption.

Transport confidentiality uses MGF1 as a stream cipher and obtains the entropy for each message from the following three parameters; nonceOdd, nonceEven and session AuthData.

It is imperative that the stream cipher not use the same XOR sequence at any time. The following illustrates how the sequence changes for each message (both input and output).

M1Input – N2, N1, sessionSecret)

M1Output – N4, N1, sessionSecret)

M2Input – N4, N3, sessionSecret)

M2Output – N6, N3, sessionSecret)

There is an issue with this sequence. If the caller does not change N1 to N3 between M1Output and M2Input then the same sequence will be generated. The TPM does not enforce the requirement to change this value so it is possible to leak information.

The fix for this is to add one more parameter, the direction. So the sequence is now this:

M1Input – N2, N1, “in”, sessionSecret)

M1Output – N4, N1, “out”, sessionSecret)

M2Input – N4, N3, “in”, sessionSecret)

© ISO/IEC 2009 All rights reserved

Copyright International Organization for Standardization
Provided by IHS under license with ISO
No reproduction or networking permitted without license from IHS
Not for Resale

M2Output – N6, N3, “out”, sessionSecret)

Where “in” indicates the in direction and “out” indicates the out direction.

Notice the calculation for M1Output uses “out” and M2Input uses “in”, so if the caller makes a mistake and does not change nonceOdd, the sequence will still be different.

nonceEven is under control of the TPM and is always changing, so there is no need to worry about nonceEven not changing.

End of informative comment

19.1.2 HMAC calculation

Start of informative comment

The HMAC calculation for transports presents some issues with what should and should not be in the calculation. The idea is to create a calculation for the wrapped command and add that to the wrapper.

So the data area for a wrapped command is not entirely HMAC’d like a normal command would be.

The process is to calculate the inParamDigest of the unencrypted wrapped command according to the normal rules of command HMAC calculations. Then use that value as the 3S parameter in the calculation. 2S is the actual wrapped command size, and not the size of inParamDigest.

Example using a wrapped TPM_LoadKey command

Calculate the SHA-1 value for the TPM_LoadKey command (ordinal and data) as per the normal HMAC rules. Take the digest and use that value as 3S for the TPM_ExecuteTransport HMAC calculation.

End of informative comment

19.1.3 Transport log creation

Start of informative comment

The log of information that a transport session creates needs a mechanism to tie any keys in use during the session to the session. As the HMAC and encryption for the command specifically exclude handles, there is no direct way to create the binding.

When creating the transport input log, if the handle(s) points to a key or keys, the public keys are digested into the log. The session owner knows the value of any keys in use and hence can still create a log that shows the values used by the log and can validate the session.

End of informative comment

19.1.4 Additional Encryption Mechanisms

Start of informative comment

The TPM can optionally implement alternate algorithms for the encryption of commands sent to the TPM_ExecuteTransport command. The designation of the algorithm uses the TPM_ALGORITHM_ID and TPM_ENC_SCHEME elements of the TPM_TRANSPORT_PUBLIC parameter of the TPM_EstablishTransport command.

The anticipation is that AES will be supported by various TPMs. Symmetric algorithms have options available to them like key size, block size and operating mode. When using an algorithm other than MGF1 the algorithm and scheme must specify these options.

End of informative comment

1. The TPM MAY support other symmetric algorithms for the confidentiality requirement in TPM_EstablishTransport

--`,,```,,,,````-`-`,,`,,`,`,,`---

Copyright International Organization for Standardization
Provided by IHS under license with ISO
No reproduction or networking permitted without license from IHS
© ISO/IEC 2009 – All rights reserved
Not for Resale

19.2 Transport Error Handling

Start of informative comment

With the transport hiding the actual execution of commands and the transport capable of generating errors, rules must be established to allow for the errors and the results of commands to be properly passed to TPM callers.

End of informative comment

1. There are 3 error cases:
2. C1 is the case where an error occurs during the processing of the transport package at the TPM. In this case, the wrapped command has not been sent to the command decoder. Errors occurring during C1 are sent back to the caller as a response to the TPM_ExecuteTransport command. The error response does not have confidentiality.
3. C2 is the case where an error occurs during the processing of the wrapped command. This results in an error response from the command. The session returns the error response according to the attributes of the session.
4. C3 is the case where an error occurs after the wrapped command has completed processing and the TPM is preparing the response to the TPM_ExecuteTransport command. In this case, where the TPM does have an internal error, the TPM has no choice but to return the error as in C1. This however hides the results of the wrapped command. If the wrapped command completed successfully then there are session nonces that are being returned to the caller that are lost. The loss of these nonces causes the caller to be unsure of the state of the TPM and requires the reestablishment of sessions and keys.

19.3 Exclusive Transport Sessions

Start of informative comment

The caller may establish an exclusive session with the TPM. When an exclusive session is running, execution of any command other then TPM_ExecuteTransport or TPM_ReleaseTransportSigned targeting the exclusive session causes the abnormal invalidation of the exclusive transport session. Invalidation means that the handle is no longer valid and all subsequent attempts to use the handle return an error.

The design for the exclusive session provides an assurance that no other command executed on the TPM. It is not a lock to prevent other operations from occurring. Therefore, the caller is responsible for ensuring no interruption of the sequence of commands using the TPM.

One exclusive session

The TPM only supports one exclusive session at a time. There is no nesting or other commands possible. The TPM maintains an internal flag that indicates the existence of an exclusive session.

TSS responsibilities

It is the responsibility of the TSS (or other controlling software) to ensure that only commands using the session reach the TPM. As the purpose of the session is to show that nothing else occurred on the TPM during the session, the TSS should control access to the TPM and prevent any other uses of the TPM. The TSS design must take into account the possibility of exclusive session handle invalidation.

© ISO/IEC 2009 – All rights reserved

Copyright International Organization for Standardization
Provided by IHS under license with ISO
No reproduction or networking permitted without license from IHS
Not for Resale

Sleep states

Exclusive sessions as defined here do not work across TPM_SaveState and TPM_Startup(ST_STATE) invocations. To have this sequence work properly there would need to be exceptions to allowing only TPM_ExecuteTranport and TPM_ReleaseTransportSigned in an exclusive session. The requirement for these exceptions would come from the attempt of the TSS to understand the current state of the TPM. Commands like TPM_GetCapability and others would have to execute to inform the TSS as to the internal state of the TPM. For this reason, there are no exceptions to the rule and the exclusive session does not remain active across a TPM_SaveState command.

End of informative comment

1. The TPM MUST support only one exclusive transport session
2. The TPM MUST invalidate the exclusive transport session upon the receipt of any command other than TPM_ExecuteTransport or TPM_ReleaseTransportSigned targeting the exclusive session.
   a. Invalidation includes the release of any resources assigned to the session

19.4 Transport Audit Handling

Start of informative comment

Auditing of TPM_ExecuteTransport occurs as any other command that may require auditing. There are two entries in the log: one for input and one for output. The execution of the wrapped command can create an anomaly in the log.

Assume that both TPM_ExecuteTransport and the wrapped commands require auditing, the audit flow would look like the following:

TPM_ExecuteTransport input parameters

wrapped command input parameters

wrapped command output parameters

TPM_ExecuteTransport output parameters

End of informative comment

1. Audit failures are reported using the AUTHFAIL error commands and reflect the success or failure of the wrapped command.

19.4.1 Auditing of wrapped commands

Start of informative comment

Auditing provides information to allow an auditor to recreate the operations performed. Confidentiality on the transport channel is to hide what operations occur. These two features are in conflict. According to the TPM design philosophy, the TPM Owner takes precedence.

For a command sent on a transport session, with the session using confidentiality and the command requiring auditing, the TPM will execute the command however the input and output parameters for the command are ignored.

End of informative comment

1. When the wrapped command requires auditing and the transport session specifies encryption, the TPM MUST perform the audit. However, when computing the audit digest:
   a. For input, only the ordinal is audited.
   b. For output, only the ordinal and return code are audited.

--`,,```,,,,````-`-`,,`,,`,`,,`---
© ISO/IEC 2009 – All rights reserved
Copyright International Organization for Standardization
Provided by IHS under license with ISO
No reproduction or networking permitted without license from IHS
Not for Resale

20. Audit Commands

Start of informative comment

To allow the TPM Owner the ability to determine that certain operations on the TPM have been executed, auditing of commands is possible. The audit value is a digest held internally to the TPM and externally as a log of all audited commands. With the log held externally to the TPM, the internal digest must allow the log auditor to determine the presence of attacks against the log. The evidence of tampering may not provide evidence of the type of attack mounted against the log.

The TPM cannot enforce any protections on the external log. It is the responsibility of the external log owner to properly maintain and protect the log.

The TPM provides mechanisms for the external log maintainer to resynchronize the internal digest and external logs.

The Owner has the ability to set which functions generate an audit event and to change which functions generate the event at any time.

The status of the audit generation is not sensitive information and so the command to determine the status of the audit generation is not an owner authorized command.

It is important to note the difference between auditing and the logging of transport sessions. The audit log provides information on the execution of specific commands. There will be a very limited number of audited commands, most likely those commands that provide identities and control of the TPM. Commands such as TPM_Unseal would not be audited. They would use the logging functions of a transport session.

The auditing of an ordinal happens in a two-step process. The first step involves auditing the receipt of the command and the input parameters; the second step involves auditing the response to the command and the output parameters. This two-step process is in place to lower the amount of memory necessary to keep track of the audit while executing the command. This two-step process makes no memory requirements on a TPM to save any audit information while a command is executing.

There is a requirement to enable verification of the external audit log both during a power session and across power sessions and to enable detection of partial or inconsistent audit logs throughout the lifetime of a TPM.

A TPM will hold an internal record consisting of a non-volatile counter (that increments once per session, when the first audit event of that session occurs) and a digest (that holds the digest of the current session). Most probably, the audit digest will be volatile. Note, however, that nothing in ISO/IEC 11889 prevents the use of a non-volatile audit digest. This arrangement of counter and digest is advantageous because it is easier to build a high endurance non-volatile counter than a high endurance non-volatile digest. This arrangement is insufficient, however, because the truncation of an audit log of any session is possible without trace. It is therefore necessary to perform an explicit close on the audit session. If there is no record of a close-audit event in an audit session, anything could have happened after the last audit event in the audit log. The essence of a typical TPM audit recording mechanism is therefore:

The TPM contains a volatile digest used like a PCR, where the “integrity metrics” are digests of command parameters in the current audit session.

An audit session opens when the volatile “PCR” digest is “extended” from its NULL state. This occurs whenever an audited command is executed AND no audit session currently exists, and in no other circumstances. When an audit session opens, a non-volatile counter is automatically incremented.

© ISO/IEC 2009 All rights reserved

Copyright International Organization for Standardization
Provided by IHS under license with ISO
No reproduction or networking permitted without license from IHS
Not for Resale

An audit session closes when a TPM receives TPM_GetAuditDigestSigned with a closeAudit parameter asserted. An audit session must be considered closed if the value in the volatile digest is invalid (for whatever reason).

TPM_GetCapability should report the effect of TPM_Startup on the volatile digest. (TPMs may initialize the volatile digest on the first audit command after TPM_Startup(ST_CLEAR), or on the first audit command after any version of TPM_Startup, or may be independent of TPM_Startup.)

When the TPM signs its audit digest, it signs the concatenation of the non-volatile counter and the volatile digest, and exports the value of the non-volatile counter, plus the value of the volatile digest, plus the value of the signature.

If the audit digest is initialized by TPM_Startup(ST_STATE), then it may be useless to audit the TPM_SaveState ordinal. Any command after TPM_SaveState MAY invalidate the saved state. If authorization sessions are part of the saved state, TPM_GetAuditDigestSigned will most likely invalidate the state as it changes the preserved authorization session nonce. It may therefore be impossible to get the audit results.

The system designer needs to ensure that the selected TPM can handle the specific environment and avoid burnout of the audit monotonic counter.

End of informative comment

1. Audit functionality is optional
   a. If the platform specific specification requires auditing, the specification SHALL indicate how the TPM implements audit
2. The TPM MUST maintain an audit monotonic count that is only available for audit purposes.
   a. The increment of this audit counter is under the sole control of the TPM and is not usable for other count purposes.
   b. This monotonic count MUST BE incremented by one whenever the audit digest is “extended” from a NULL state.
3. The TPM MUST maintain an audit digest.
   a. This digest MUST be set to all zeros upon the execution of TPM_GetAuditDigestSigned with a TRUE value of closeAudit provided that the signing key is an identity key.
   b. This digest MAY be set to all zeros on TPM_Startup[ST_CLEAR] or TPM_Startup[ST_STATE].
   c. When an audited command is executed, this register MUST be extended with the digest of that command.
4. Each command ordinal has an indicator in non-volatile TPM memory that indicates if execution of the command will generate an audit event. The setting of the ordinal indicator MUST be under control of the TPM Owner.
5. Updating of auditDigest MAY cease when TPM_STCLEAR_FLAGS -> deactivated is TRUE. This is because a deactivated TPM performs no useful service until the TPM_Startup(ST_CLEAR), at which point TPM_STCLEAR_FLAGS -> deactivated is reinitialized.

© ISO/IEC 2009 – All rights reserved
Copyright International Organization for Standardization
Provided by IHS under license with ISO
No reproduction or networking permitted without license from IHS
Not for Resale

20.1 Audit Monotonic Counter

Start of informative comment

The audit monotonic counter (AMC) performs the task of sequencing audit logs across audit sessions. The AMC must have no other uses other than the audit log.

The TPM and platform should be matched such that the expected AMC endurance matches the expected platform audit sessions and sleep cycles.

Given the size of the AMC it is not anticipated that the AMC would roll over. If the AMC were to roll over, and the storage of the AMC still allowed updates, the AMC could cycle and start at 0 again.

End of informative comment

1. The AMC is a TPM_COUNTER_VALUE.
2. The AMC MUST last for 7 years or at least 1,000,000 audit sessions, whichever occurs first. After this amount of usage, there is no guarantee that the TPM will continue to properly increment the monotonic counter.

© ISO/IEC 2009 – All rights reserved

Copyright International Organization for Standardization
Provided by IHS under license with ISO
No reproduction or networking permitted without license from IHS
Not for Resale

21. Design Section on Time Stamping

Start of informative comment

The TPM provides a service to apply a time stamp to various blobs. The time stamp provided by the TPM is not an actual universal time clock (UTC) value but is the number of timer ticks the TPM has counted. It is the responsibility of the caller to associate the ticks to an actual UTC time.

The TPM counts ticks from the start of a timing session. Timing sessions are platform dependent events that may or may not coincide with TPM_Init and TPM_Startup sessions. The reason for this difference is the availability of power to the TPM. In a PC desktop, for instance power could be continually available to the TPM by using power from the wall socket. For a PC mobile platform, power may not be available when only using the internal battery. It is a platform designer's decision as to when and how they supply power to the TPM to maintain the timing ticks.

The TPM can provide a time stamping service. The TPM does not maintain an internal secure source of time rather the TPM maintains a count of the number of ticks that have occurred since the start of a timing session.

On a PC, the TPM may use the timing source of the LPC bus or it may have a separate clock circuit. The anticipation is that availability of the TPM timing ticks and the tick resolution is an area of differentiation available to TPM manufactures and platform providers.

End of informative comment

1. ISO/IEC 11889 makes no requirement on the mechanism required to implement the tick counter in the TPM.
2. ISO/IEC 11889 makes no requirement on the ability for the TPM to maintain the ability to increment the tick counter across power cycles or in different power modes on a platform.

21.1 Tick Components

Start of informative comment

The TPM maintains for each tick session the following values:

Tick Count Value (TCV) – The count of ticks for the session.

Tick Increment Rate (TIR) – The rate at which the TCV is incremented. There is a set relationship between TIR and seconds, the relationship is set during manufacturing of the TPM and platform. This is the TPM_CURRENT_TICKS -> tickRate parameter.

Tick Session Nonce (TSN) – The session nonce is set at the start of each tick session.

End of informative comment

1. The TCV MUST be set to 0 at the start of each tick session. The TPM MUST start a new tick session if the TPM loses the ability to increment the TCV according to the TIR.
2. The TSN MUST be set to the next value from the TPM RNG at the start of each new tick session. When the TPM loses the ability to increment the TCV according to the TIR the TSN MUST be set to all zeros.
3. If the TPM discovers tampering with the tick count (through timing changes, etc.) the TPM MUST treat this as an attack and shut down further TPM processing as if a self-test had failed.

--`,,```,,,,````-`-`,,`,,`,`,,`---

© ISO/IEC 2009 – All rights reserved
Copyright International Organization for Standardization
Provided by IHS under license with ISO
No reproduction or networking permitted without license from IHS
Not for Resale

21.2 Basic Tick Stamp

Start of informative comment

The TPM does not provide a secure time source, nor does it provide a signature over some time value. The TPM does provide a signature over some current tick counter. The signature covers a hash of the blob to stamp, the current counter value, the tick session nonce and some fixed text.

The Tick Stamp Result (TSR) is the result of the tick stamp operation that associates the TCV, TSN and the blob. There is no association with the TCV or TSR with any UTC value at this point.

End of informative comment

21.3 Associating a TCV with UTC

Start of informative comment

An outside observer would like to associate a TCV with a relevant time value. The following shows how to accomplish this task. This protocol is not required but shows how to accomplish the job.

EntityA wants to have BlobA time stamped. EntityA performs TPM_TickStamp on BlobA. This creates TSRB (TickStampResult for Blob). TSRB records TSRBTCV, the current value of the TCV, and associates TSRBTCV with the TSN.

Now EntityA needs to associate a TCV with a real time value. EntityA creates blob TS which contains some known text like “Tick Stamp”. EntityA performs TPM_TickStamp on blob TS creating TSR1. This records TSR1TCV, the current value of the TCV, and associates TSR1TCV with the TSN.

EntityA sends TSR1 to a Time Authority (TA). TA creates TA1 which associates TSR1 with UTC1.

EntityA now performs TPM_TickStamp on TA1. This creates TSR2. TSR2 records TSR2TCV, the current values of the TCV, and associates TSR2TCV with the TSN.

Analyzing the associations

EntityA has three TSRs; TSRB the TSR of the blob that we wanted to time stamp, TSR1 the TSR associated with the TS blob and TSR2 the TSR associated with the information from the TA. EntityA wants to show an association between the various TSR such that there is a connection between the UTC and BlobA.

From TSR1 EntityA knows that TSR1TCV is less than the UTC. This is true since the TA is signing TSR1 and the creation of TSR1 has to occur before the signature of TSR1. Stated mathematically:

TSR1TCV < UTC1

From TSR2 EntityA knows that TSR2TCV is greater than the UTC. This is true since the TPM is signing TA1 which must be created before it was signed. Stated mathematically:

TSR2TCV > UTC1

EntityA now knows TSR1TCV and TSR2TCV bound UTC1. Stated mathematically:

TSR1TCV < UTC1 < TSR2TCV

This association holds true if the TSN for TSR1 matches the TSN for TSR2. If some event occurs that causes the TPM to create a new TSN and restart the TCV then EntityA must start the process all over again.

EntityA does not know when UTC1 occurred in the interval between TSR1TCV and TSR2TCV. In fact, the value TSR2TCV minus TSR1TCV (TSRDELTA) is the amount of uncertainty to which a TCV value should be associated with UTC1. Stated mathematically:

TSRDELTA = TSR2TCV – TSR1TCV iff TSR1TSN = TSR2TSN

© ISO/IEC 2009 All rights reserved

Copyright International Organization for Standardization
Provided by IHS under license with ISO
No reproduction or networking permitted without license from IHS
Not for Resale

EntityA can obtains k1 the relationship between ticks and seconds using the TPM_GetCapability command. EntityA also obtains k2 the possible errors per tick. EntityA now calculate DeltaTime which is the conversion of ticks to seconds and the TSRDELTA. State mathematically:

DeltaTime = (k1 * TSRDELTA) + (k2 * TSRDELTA)

To make the association between DeltaTime, UTC and TSRB note the following:

DeltaTime = (k1*TSRDelta) + Drift = TimeChange + Drift

Where ABSOLUTEVALUE(Drift)<k2*TSRDelta

(1) TSR1TCV < UTC1 < TSR2TCV

True since you cannot sign something before it exists

(2) TSR1TCV < UTC1 < TSR1TCV + TSR2TCV-TSR1TCV <= TSR1TCV + DeltaTime (= TSR1TCV +TimeChange +Drift)

True because TSR1 and TSR2 are in the same tick session proved by the same TSN. (Note TimeChange is positive!)

(3) 0 < UTC1-TSR1TCV < DeltaTime

(Subtract TSR1TCV from all sides)

(4) 0 > TSR1TCV - UTC1 > -DeltaTime = -TimeChange - Drift

(Multiply through by -1)

(5) TimeChange/2 > [TSR1TCV - (UTC1-TimeChange/2)] > -TimeChange/2 - Drift

(add TimeChange/2 to all sides)

(6) TimeChange/2 + ABSOLUTEVALUE(Drift) > [TSR1TCV - (UTC1-TimeChange/2)]

> -TimeChange/2 - ABSOLUTEVALUE(Drift)

Making the large side of an equality bigger, and potentially making the small side smaller.

(7) ABSOLUTEVALUE[TSR1TCV - (UTC1-TimeChange/2)] < TimeChange/2 +

ABSOLUTEVALUE(Drift)

(Definition of Absolute Value, and TimeChange is positive)

From which we see that TSR1TCV is approximately UTC1-TimeChange/2 with a symmetric possible error of TimeChange/2 + AbsoluteValue(Drift)

We can calculate this error as being less than k1*TSRDelta/2 + k2*TSRDelta.

EntityA now has the ability to associate UTC1 with TSBTSV and by allow others to know that BlobA was signed at a certain time. First TSBTSN must equal TSR1TSN. This relationship allows EntityA to assert that TSRB occurs during the same session as TSR1 and TSR2.

EntityA calculates HashTimeDelta which is the difference between TSR1TCV and TSRBTCV and the conversion of ticks to seconds. HashTimeDelta includes the same k1 and k2 as calculated above. Stated mathematically:

E = k2(TSR1TCV – TSRBTCV)

HashTimeDelta = k1(TSR1TCV – TSRBTCV) + E

© ISO/IEC 2009 – All rights reserved
Copyright International Organization for Standardization
Provided by IHS under license with ISO
No reproduction or networking permitted without license from IHS
Not for Resale

Now the following relationships hold:

(1) UTC1 – DeltaTime < TSRBTCV – (TSRBTCV – TSR1TCV) < UTC1

(2) UTC1 – DeltaTime < TSRBTCV + HashTimeDelta + E < UTC1

(3) UTC1 – HashTimeDelta – DeltaTime – E < TSRBTCV < UTC1 – HashTimeDelta + E

(4) TSRBTCV = (UTC1 – HashTimeDelta – DeltaTime/2) + (E + DeltaTime/2)

This has the correct properties

As DeltaTime grows so does the error bar (or the uncertainty of the time association)

As the difference between the time of the measurement and the time of the time stamp grows, so does the E as a function of E is HashTimeDelta

End of informative comment

21.4 Additional Comments and Questions

Start of informative comment

Time Difference

If two things are time stamped, say at TCVs and TCVe (for TCV at start, TCV at end) then any entity can calculate the time difference between the two events and will get:

TimeDiff = k1*|TCVe – TCVs| + k2*|TCVe – TCVs|

This TimeDiff does not indicate what time the two events occurred at it merely gives the time between the events. This time difference doesn't require a Time Authority.

Why is TSN (tick session nonce) required?

Without it, there is no way to associate a Time Authority stamp with any TSV, as the TSV resets at the start of every tick session. The TSN proves that the concatenation of TSV and TSN is unique.

How does the protocol prevent replay attacks?

The TPM signs the TSR sent to the TA. This TSR contains the unique combination of TSV and TSN. Since the TSN is unique to a tick session and the TSV continues to increment any attempt to recreate the same TSR will fail. If the TPM is reset such that the TSV is at the same value, the TSN will be a new value. If the TPM is not reset then the TSV continues to increment and will not repeat.

How does EntityA know that the TSR1 that the TA signs is recent?

It doesn't. EntityA checks however to ensure that the TSN is the same in all TSR. This ensures that the values are all related. If TSR1 is an old value then the HashTimeDelta will be a large value and the uncertainty of the relation of the signing to the UTC will be large.

Why does associating a UTC time with a TSV take two steps?

This is because it takes some time between when a request goes to a time authority and when the response comes. The protocol measures this time and uses it to create the time deltas. The relationship of TSV to UTC is somewhere between the request and response.

Affect of power on the tick counter

As the TPM is not required to maintain an internal clock and battery, how the platform provides power to the TPM affects the ability to maintain the tick counter. The original mechanism had the TPM maintaining an indication of how the platform provided the power. Previous performance does not predict what might occur in the future, as the platform may be unable to continue to provide the power (dead battery, pulled plug from wall etc). With the knowledge that the TPM cannot accurately report the future, the specification deleted tick type from the TPM.

© ISO/IEC 2009 – All rights reserved

Copyright International Organization for Standardization
Provided by IHS under license with ISO
No reproduction or networking permitted without license from IHS
Not for Resale

The information relative to what the platform is doing to provide power to the TPM is now a responsibility of the TSS. The TSS should first determine how the platform was built, using the platform credential. The TSS should also attempt to determine the actual performance of the TPM in regards to maintaining the tick count. The TSS can help in this determination by keeping track of the tick nonce. The tick nonce changes each time the tick count is lost. By comparing the tick nonce across system events the TSS can obtain a heuristic that represents how the platform provides power to the TPM.

The TSS must define a standard set of values as to when the tick nonce continues to increment across system events.

The following are some PC implementations that give the flavor of what is possible regarding the clock on a specific platform.

TICK_INC - No TPM power battery. Clock comes from PCI clock, may stop from time to time due to clock stopping protocols such as CLKRUN.

TICK_POWER - No TPM power battery. Clock source comes from PCI clock, always runs except in S3+.

TICK_STSTATE - External power (might be battery) consumed by TPM during S3 only. Clock source comes either from a system clock that runs during S3 or from crystal/internal TPM source.

TICK_STCLEAR - Standby power used to drive counter. In desktop, may be related to when system is plugged into wall. Clock source comes either from a system clock that runs when standby power is available or from crystal/internal TPM source.

TICK_ALWAYS - TPM power battery. Clock source comes either from a battery powered system clock that crystal/internal TPM source.

End of informative comment

© ISO/IEC 2009 – All rights reserved
Copyright International Organization for Standardization
Provided by IHS under license with ISO
No reproduction or networking permitted without license from IHS
Not for Resale

22. Context Management

Start of informative comment

The TPM is a device that contains limited resources. Caching of the resources may occur without knowledge or assistance from the application that loaded the resource. In version 1.1 there were two types of resources that had need of this support keys and authorization sessions. Each type had a separate load and restore operation. In version 1.2 there is the addition of transport sessions. To handle these situations generically 1.2 is defining a single context manager that all types of resources may use.

The concept is simple, a resource manager requests that wrapping of a resource in a manner that securely protects the resource and only allows the restoring of the resource on the same TPM and during the same operational cycle.

Consider a key successfully loaded on the TPM. The parent keys that loaded the key may have required a different set of PCR registers than are currently set on the TPM. For example, the end result is to have key5 loaded. Key3 is protected by key2, which is protected by key1, which is protected by the SRK. Key1 requires PCR1 to be in a certain state, key2 requires PCR2 to load and key3 requires PCR3. Now at some point in time after key1 loaded key2, PCR1 was extended with additional information. If key3 is evicted then there is no way to reload key3 until the platform is rebooted. To avoid this type of problem the TPM can execute context management routines. The context management routines save key3 in its current state and allow the TPM to restore the state without having to use the parent keys (key1 and key2).

There are numerous issues with performing context management on sessions. These issues revolve around the use of the nonces in the session. If an attacker can successfully store, attack, fail and then reload the session the attacker can repeat the attack many times.

The key that the TPM uses to encrypt blobs may be a volatile or non-volatile key. One mechanism would be for the TPM to generate a new key on each TPM_Startup command. Another would be for the TPM to generate the key and store it persistently in the TPM_PERMANENT_DATA area.

The symmetric key should be relatively the same strength as a 2048-bit RSA key. 128-bit AES would be appropriate.

End of informative comment

1. Context management is a required function.
2. Execution of the context commands MUST NOT cause the exposure of any TPM_Shielded-Location.
3. The TPM MUST NOT allow the context saving of the EK or the SRK.
4. The TPM MAY use either symmetric or asymmetric encryption. For asymmetric encryption the TPM MUST use a 2048 RSA key.
5. A wrapped session blob MUST only be loadable once. A wrapped key blob MAY be reloadable.
6. The TPM MUST support a minimum of 16 concurrent saved contexts other than keys. There is no minimum or maximum number of concurrent saved key contexts.
7. All external session blobs (of type TPM_RT_TRANS or TPM_RT_AUTH) can be invalidated upon specific request (via TPM_FlushXXX using TPM_RT_CONTEXT as resource type), this does not include session blobs of type TPM_RT_KEY.
8. External session blobs are invalidated on TPM_Startup(ST_CLEAR) or on TPM_Startup(any) based on the startup effects settings
    a. Session blobs of type TPM_RT_KEY with the attributes of parentPCRStatus = FALSE and isVolatile = FALSE SHOULD not invalidated on TPM_Startup(any)

© ISO/IEC 2009 All rights reserved

Copyright International Organization for Standardization
Provided by IHS under license with ISO
No reproduction or networking permitted without license from IHS
Not for Resale

9. All external session invalidate automatically upon installation of a new owner due to the setting of a new tpmProof.
10. If the TPM enters failure mode ALL session blobs (including keys) MUST be invalidated
    a. Invalidation includes ensuring that contextNonceKey and contextNonceSession will change when the TPM recovers from the failure.
11. Attempts to restore a wrapped blob after the successful completion of TPM_Startup(ST_CLEAR) MUST fail. The exception is a wrapped key blob which may be long-term and which MAY restore after a TPM_Startup(ST_CLEAR).
12. The save and load context commands are the generic equivalent to the context commands in 1.1. Version 1.2 deprecates the following commands:
    a. TPM_AuthSaveContext
    b. TPM_AuthLoadContext
    c. TPM_KeySaveContext
    d. TPM_KeyLoadContext

© ISO/IEC 2009 – All rights reserved
Copyright International Organization for Standardization
Provided by IHS under license with ISO
No reproduction or networking permitted without license from IHS
Not for Resale

23. Eviction

Start of informative comment

The TPM has numerous resources held inside of the TPM that may need eviction. The need for eviction occurs when the number or resources in use by the TPM exceed the available space. For resources that are hard to reload (i.e. keys tied to PCR values) the outside entity should first perform a context save before evicting items.

In version 1.1 there were separate commands to evict separate resource types. This new command set uses the resource types defined for context saving and creates a generic command that will evict all resource types.

End of informative comment

1. The TPM MUST NOT flush the EK or SRK using this command.
2. Version 1.2 deprecates the following commands:
   a. TPM_Terminate_Handle
   b. TPM_EvictKey
   c. TPM_Reset

© ISO/IEC 2009 All rights reserved

Copyright International Organization for Standardization
Provided by IHS under license with ISO
No reproduction or networking permitted without license from IHS
Not for Resale

24. Session pool

Start of informative comment

The TPM supports two types of sessions that use the rolling nonce protocol, authorization and transport. These sessions require much of the same handling and internal storage by the TPM. To allow more flexibility the internal storage for these sessions will be defined as coming from the same pool (or area).

The pool requires that three (3) sessions be available. The entities using the TPM can determine the usage models of what sessions are active. This allows a TPM to have 3 authorization sessions or 3 transport sessions at one time.

Using all available pool resources for transport sessions is not a very usable model. If all resources are in use by transport there is no resources available for authorization sessions and hence no ability to execute any commands requiring authorization. A more realistic model would be to have two transport sessions and one authorization session. While this is an unrealistic model for actual execution there will be no requirement that the TPM prevent this from happening. A model of how it could occur would be when there are two applications running, both using 2 transport sessions and one authorization session. When switching between the applications if the requirement was that only 2 transport sessions could be active the TSS that would provide the context switch would have to ensure that the transport sessions were context saved first.

Sessions can be virtualized, so while the TPM may only have 3 loaded sessions, there may be an unlimited number of context saved sessions stored outside the TPM.

End of informative comment

1. The TPM MUST support a minimum of three (3) concurrent sessions. The sessions MAY be any mix of authentication and transport sessions.

© ISO/IEC 2009 – All rights reserved
Copyright International Organization for Standardization
Provided by IHS under license with ISO
No reproduction or networking permitted without license from IHS
Not for Resale

25. Initialization Operations

Start of informative comment

Initialization is the process where the TPM establishes an operating environment from a no power state. Initialization occurs in many different flavors with PCR, keys, handles, sessions and context blobs all initialized, reloaded or unloaded according to the rules and platform environment.

Initialization does not affect the operational characteristics of the TPM (like TPM Ownership).

Clear is the process of returning the TPM to factory defaults. The clear commands need protection from unauthorized use and must allow for the possibility of changing Owners. The clear process requires authorization to execute and locks to prevent unauthorized operation.

The clear functionality performs the following tasks:

Invalidate SRK. Invalidating the SRK invalidates all protected storage areas below the SRK in the hierarchy. The areas below are not destroyed they just have no mechanism to be loaded anymore.

All TPM volatile and non-volatile data is set to default value except the endorsement key pair. The clear includes the Owner-AuthData, so after performing the clear, the TPM has no Owner. The PCR values are undefined after a clear operation.

The TPM shall return TPM_NOSRK until an Owner is set. After the execution of the clear command, the TPM must go through a power cycle to properly set the PCR values.

The Owner has ultimate control of when a clear occurs.

The Owner can perform the TPM_OwnerClear command using the TPM Owner authorization. If the Owner wishes to disable this clear command and require physical access to perform the clear, the Owner can issue the TPM_DisableOwnerClear command.

During the TPM startup processing anyone with physical access to the machine can issue the TPM_ForceClear command. This command performs the clear. The TPM_DisableForceClear disables the TPM_ForceClear command for the duration of the power cycle. TSS startup code that does not issue the TPM_DisableForceClear leaves the TPM vulnerable to a denial of service attack. The assumption is that the TSS startup code will issue the TPM_DisableForceClear on each power cycle after the TSS determines that it will not be necessary to issue the TPM_ForceClear command. The purpose of the TPM_ForceClear command is to recover from the state where the Owner has lost or forgotten the TPM Ownership token.

The TPM_ForceClear must only be possible when the issuer has physical access to the platform. The manufacturer of a platform determines the exact definition of physical access.

End of informative comment

1. The TPM MUST support proper initialization. Initialization MUST properly configure the TPM to execute in the platform environment.
2. Initialization MUST ensure that handles, keys, sessions, context blobs and PCR are properly initialized, reloaded or invalidated according to the platform environment.
3. The description of the platform environment arrives at the TPM in a combination of TPM_Init and TPM_Startup.

© ISO/IEC 2009 All rights reserved

Copyright International Organization for Standardization
Provided by IHS under license with ISO
No reproduction or networking permitted without license from IHS
Not for Resale

26. HMAC digest rules

Start of informative comment

The order of calculation of the HMAC is critical to being able to validate the authorization and parameters of a command. All commands use the same order and format for the calculation.

A more exact representation of a command would be the following

```
*************************************************************
* TAG  | LEN  | ORD  | HANDLES | DATA  | AUTH1 (o) | AUTH2  (o) *
*************************************************************
```

The text area for the HMAC calculation would be the concatenation of the following:

ORD || DATA

End of informative comment

The HMAC digest of parameters uses the following order

1. Skip tag and length
2. Include ordinal. This is the 1S parameter in the HMAC column for each command
3. Skip handle(s). This includes key and other session handles
4. Include data and other parameters for the command. This starts with the 2S parameter in the HMAC column for each command.
5. Skip all AuthData values.

© ISO/IEC 2009 – All rights reserved
Copyright International Organization for Standardization
Provided by IHS under license with ISO
No reproduction or networking permitted without license from IHS
Not for Resale

27. Generic authorization session termination rules

Start of informative comment

These rules are the generic rules that govern all authorization sessions, a specific session type may have additional rules or modifications of the generic rules

End of informative comment

1. A TPM SHALL unilaterally perform the actions of TPM_FlushSpecific for a session upon any of the following events
   a. “continueUse” flag in the authorization session is FALSE
   b. Shared secret of the session in use to create the exclusive-or for confidentiality of data. Example is TPM_ChangeAuth terminates the authorization session. TPM_ExecuteTransport does not terminate the session due to protections inherent in transport sessions.
   c. When the associated entity is invalidated
   d. When the command returns a fatal error. This is due to error returns not setting a nonceEven. Without a new nonceEven the rolling nonces sequence is broken hence the TPM MUST terminate the session.
   e. Failure of an authorization check at the start of the command
   f. Execution of TPM_Startup(ST_CLEAR)
2. The TPM MAY perform the actions of TPM_FlushSpecific for a session upon the following events
   a. Execution of TPM_Startup(ST_STATE)

© ISO/IEC 2009 All rights reserved

Copyright International Organization for Standardization
Provided by IHS under license with ISO
No reproduction or networking permitted without license from IHS
Not for Resale

28. PCR Grand Unification Theory

Start of informative comment

This section discusses the unification of PCR definition and use with locality.

The PCR allow the definition of a platform configuration. With the addition of locality, the meaning of a configuration is somewhat larger. This section defines how the two combine to provide the TPM user information relative to the platform configuration.

These are the issues regarding PCR and locality at this time

Definition of configuration

A configuration is the combination of PCR, PCR attributes and the locality.

Passing the creators configuration to the user of data

For many reasons, from the creator's viewpoint and the user's viewpoint, the configuration in use by the creator is important information. This information needs transmitting to the user with the data and with integrity.

The configuration must include the locality and may not be the same configuration that will use the data. This allows one configuration to seal a value for future use and the end user to know the genealogy of where the data comes from.

Definition of "Use"

See the definition of TPM_PCR_ATTRIBUTES for the attributes and the normative statements regarding the use of the attributes. The use of a configuration is when the TPM needs to ensure that the proper platform configuration is present. The first example is for Unseal, the TPM must only release the information sealed if the platform configuration matches the configuration specified by the seal creator. Here the use of locality is implicit in the PCR attributes, if PCR8 requires locality 2 to be present then the seal creator ensures that locality 2 is asserted by defining a configuration that uses PCR8.

The creation of a blob that specifies a configuration for use is not a "use" itself. So the SEAL command does is not a use for specifying the use of a PCR configuration.

© ISO/IEC 2009 – All rights reserved
Copyright International Organization for Standardization
Provided by IHS under license with ISO
No reproduction or networking permitted without license from IHS
Not for Resale

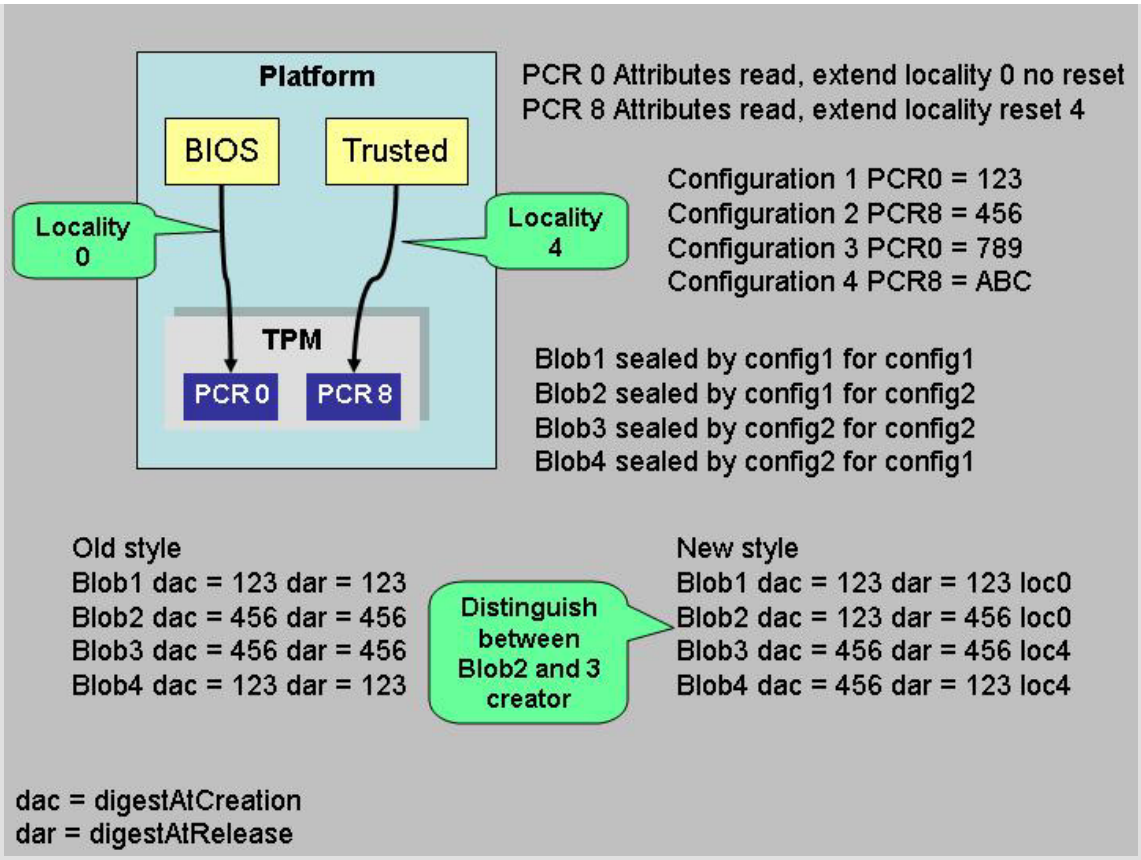

By using the “new style” or TPM_PCR_INFO_LONG structure the user can determine that Blob2 is different that Blob3.

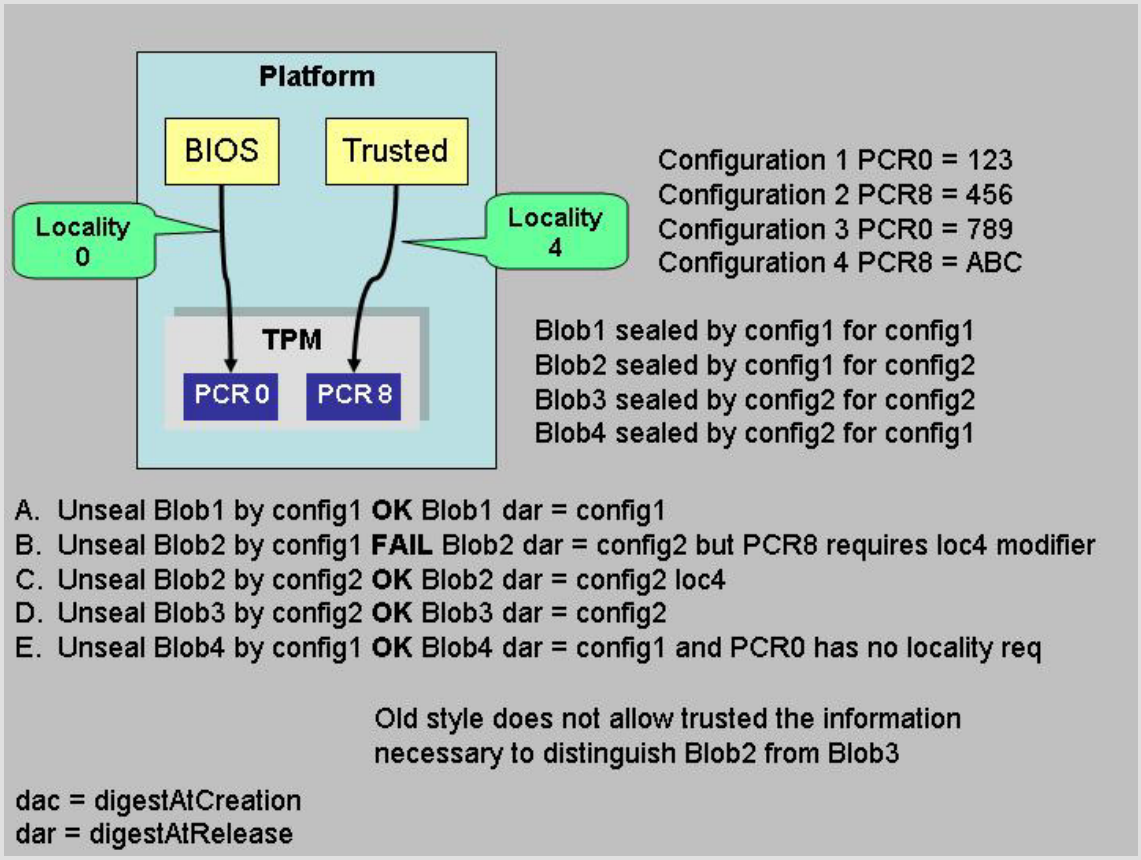

Case B is the only failure and this shows the use of the locality modifier and PCR locality attribute.

© ISO/IEC 2009 All rights reserved
Copyright International Organization for Standardization
Provided by IHS under license with ISO
No reproduction or networking permitted without license from IHS
Not for Resale

Additional attempts are obvious failures, config3 and config4 are unable to unseal any of the 4 blobs.

One example is illustrative of the problems of just specifying locality without an accompanying PCR. Assume Blob5 which specifies a dar of config1 and a locality 4 modifier. Now either config2 or config4 can unseal Blob5. In fact there is no way to restrict ANY process that gains access to locality 4 from performing the unseal. As many platforms will have no restrictions as to which process can load in locality 4 there is no additional benefit of specifying a locality modifier. If the sealer wants protections, they need to specify a PCR that requires a locality modifier.

Defining locality modifiers dynamically

This feature would enable the platform to specify how and when a locality modifier applies to a PCR. The current definition of PCR attributes has the values set in TPM manufacturing and static for all TPM in a specific platform type (like a PC).

Defining dynamic attributes would make the use of a PCR very difficult. The sealer would have to have some way of ensuring that their wishes were enforced and challengers would have to pay close attention to the current PCR attributes. For these reasons the setting of the PCR attributes is defined as a static operation made during the platform specific specification.

End of informative comment

28.1 Validate Key for use

Start of informative comment

The following shows the order and checks done before the use of a key that has PCR or locality restrictions.

Note that there is no check for the PCR registers on the DSAP session. This is due to the fact that DSAP checks for the continued validity of the PCR that are attached to the DSAP and any change causes the invalidation of the DSAP session.

The checks must validate the locality of the DSAP session as the PCR registers in use could have locality restrictions.

End of informative comment

1. If the authorization session is DSAP
   a. If the DSAP -> localityAtRelease is not 0x1F (or in other words some localities are not allowed)
      i. Validate that TPM_STANY_FLAGS -> localityModifier is matched by DSAP -> pcrInfo -> localityAtRelease, on mismatch return TPM_BAD_LOCALITY
   b. If DSAP -> digestAtRelease is not 0
      i. Calculate the current digest and compare to digestAtRelease, return TPM_BAD_PCR on mismatch
   c. If the DSAP points to an ordinal delegation
      i. Check that the DSAP authorizes the use of the intended ordinal
   d. If the DSAP points to a key delegation
      i. Check that the DSAP authorizes the use of the key
   e. If the key delegated is a CMK key
      i. The TPM MUST check the CMK_DELEGATE restrictions

© ISO/IEC 2009 – All rights reserved
Copyright International Organization for Standardization
Provided by IHS under license with ISO
No reproduction or networking permitted without license from IHS
Not for Resale

2. Set LK to the loaded key that is being used
3. If LK -> pcrInfoSize is not 0
   a. If LK -> pcrInfo -> releasePCRSelection identifies the use of one or more PCR
      i. Calculate H1 a TPM_COMPOSITE_HASH of the PCR selected by LK -> pcrInfo -> releasePCRSelection
      ii. Compare H1 to LK -> pcrInfo -> digestAtRelease on mismatch return TPM_WRONGPCRVAL
   b. If localityAtRelease is NOT 0x1F
      i. Validate that TPM_STANY_FLAGS -> localityModifier is matched by LK -> pcrInfo -> localityAtRelease on mismatch return TPM_BAD_LOCALITY
4. Allow use of the key

--`,,```,,,,````-`-`,,`,,`,`,,`---
© ISO/IEC 2009 – All rights reserved
Copyright International Organization for Standardization
Provided by IHS under license with ISO
No reproduction or networking permitted without license from IHS
Not for Resale

29. Non Volatile Storage

Start of informative comment

The TPM contains protected non-volatile storage. There are many uses of this type of area; however, a TPM needs to have a defined set of operations that touch any protected area. The idea behind these instructions is to provide an area that the manufacturers and owner can use for storing information in the TPM.

The ISO/IEC 11889 will define a limited set of information that it sees a need of storing in the TPM. The TPM and platform manufacturer may add additional areas.

The NV storage area has a limited use before it will no longer operate Hence the NV commands are under TPM Owner control.

A defined set of indexes are available when no TPM Owner is present to allow TPM and platform manufacturers the ability to fill in values before a TPM Owner exists.

To locate if an index is available, use TPM_GetCapability to return the index and the size of the area in use by the index.

The area may not be larger than the TPM input buffer. The TPM will report the maximum size available to allocate.

The storage area is an opaque area to the TPM. The TPM, other than providing the storage, does not review the internals of the area.

To SEAL a blob, the creator of the area specifies the use of PCR registers to read the value. This is the exact property of SEAL.

To obtain a signed indication of what is in a NV store area the caller would setup a transport session with logging on and then get the signed log. The log shows the parameters so the caller can validate that the TPM holds the value.

There is an attribute, for each index, that defines the expected write scheme for the index. The TPM may handle data storage differently based on the write scheme attribute that defines the expected for the index. Whenever possible the NV memory should be allocated with the write scheme attribute set to update as one block and not as individual bytes.

The non-volatile storage described here is defined by TPM_NV_DefineSpace. Other structures that a manufacturer might decide to store in non-volatile memory (e.g., PCRs, keys, the audit digest) are logically separate and do not affect the space available for the NV indexed storage described here.

End of informative comment

1. The TPM MUST support the NV commands. The TPM MUST support the NV area as defined by the TPM_NV_INDEX values.
2. The TPM MAY manage the storage area using any allocation and garbage collection scheme.
3. To remove an area from the NV store the TPM owner would use the TPM_NV_DefineSpace command with a size of 0. Any authorized user can change the value written in the NV store.
4. The TPM MUST treat the NV area as a shielded location.
    a. The TPM does not provide any additional protections (like additional encryption) to the NV area.
5. If a write operation is interrupted, then the TPM makes no guarantees about the data stored at the specified index. It MAY be the previous value, MAY be the new value or MAY be undefined or unpredictable. After the interruption the TPM MAY indicate that the index contains unpredictable information.
    a. The TPM MUST ensure that in case of interruption of a write to an index that all other indexes are not affected

© ISO/IEC 2009 – All rights reserved
Copyright International Organization for Standardization
Provided by IHS under license with ISO
No reproduction or networking permitted without license from IHS
Not for Resale

6. Minimum size of NV area is platform specific. The maximum area is TPM vendor specific.
7. A TPM MUST NOT use the NV area to store any data dependent on data structures defined in Part II of the TPM specifications, except for the NV Storage structures implied by required index values or reserved index values.

29.1 NV storage design principles

Start of informative comment

This section lists the design principles that motivate the NV area in the TPM. There was the realization that the current design made use of NV storage but not necessarily efficiently. The DIR, BIT and other commands placed demands on the TPM designer and required areas that while allowing for flexible use reserved space most likely never used (like DIR for locality 1).

The following are the design principles that drive the function definitions.

1. Provide efficient use of NV area on the TPM. NV storage is a very limited resource and data stored in the NV area should be as small as possible.

2. The TPM does not control, edit, validate or manipulate in any manner the information in the NV store. The TPM is merely a storage device. The TPM does enforce the access rules as set by the TPM Owner.

3. Allocation of the NV area for a specific use must be under control of the TPM Owner.

4. The TPM Owner, when defining the area to use, will set the access and use policy for the area. The TPM Owner can set AuthData values, delegations, PCR values and other controls on the access allowed to the area.

5. There must be a capability to allow TPM and platform manufacturers to use this area without a TPM Owner being present. This allows the manufacturer to place information into the TPM without an onerous manufacturing flow. Information in this category would include EK credential and platform credential.

6. The management and use of the NV area should not require a large number of ordinals.

7. The management and use of the NV area should not introduce new operating strategies into the TPM and should be easy to implement.

End of informative comment

29.1.1 NV Storage use models

Start of informative comment

This informative section describes some of the anticipated use models and the attributes a user of the storage area would need to set.

Owner authorized for all access

TPM_NV_DefineSpace: attributes = PER_OWERREAD || PER_OWNERWRITE

WriteValue(TPM Owner Auth, data)

ReadValue(TPM Owner Auth, data)

Set AuthData value

TPM_NV_DefineSpace: attributes = PER_AUTHREAD || PER_AUTHWRITE, auth = authValue

WriteValue(authValue, data)

ReadValue(authValue, data)

© ISO/IEC 2009 – All rights reserved

Copyright International Organization for Standardization
Provided by IHS under license with ISO
No reproduction or networking permitted without license from IHS
Not for Resale

Write once, only way to change is to delete and redefine

TPM_NV_DefineSpace: attributes = PER_WRITEDEFINE

WriteValue(size = x, data) // successful

WriteValue(size = 0) // locks

WriteValue(size = x) // fails

…

TPM_Startup(ST_Clear) // Does not affect lock

WriteValue(size = x, data) // fails

Write until specific index is locked, lock reset on Startup(ST_Clear)

TPM_NV_DefineSpace: index = 3, attributes = PER_WRITE_STCLEAR

TPM_NV_DefineSpace: index = 5, attributes = PER_WRITE_STCLEAR

WriteValue(index = 3, size = x, data) // successful

WriteValue(index = 5, size = x, data) // successful

WriteValue(index = 3, size = 0) // locks

WriteValue(index = 3, size = x, data) // fails

WriteValue(index = 5, size = x, data) // successful

…

TPM_Startup(ST_Clear) // clears lock

WriteValue(index = 3, size = x, data) // successful

WriteValue(index = 5, size = x, data) // successful

Write until index 0 is locked, lock reset by Startup(ST_Clear)

TPM_NV_DefineSpace: attributes = PER_GLOBALLOCK, index = 5

TPM_NV_DefineSpace: attributes = PER_GLOBALLOCK, index = 3

WriteValue(index = 3, size = x, data) // successful

WriteValue(index = 5, size = x, data) // successful

WriteValue(index = 0) // sets SV -> bGlobalLock to TRUE

WriteValue(index = 3, size = x, data) // fails

WriteValue(index = 5, size = x, data) // fails

…

TPM_Startup(ST_Clear) // clears lock

WriteValue(index = 3, size = x, data) // successful

WriteValue(index = 5, size = x, data) // successful

End of informative comment

© ISO/IEC 2009 – All rights reserved
Copyright International Organization for Standardization
Provided by IHS under license with ISO
No reproduction or networking permitted without license from IHS
Not for Resale

29.2 Use of NV storage during manufacturing

Start of informative comment

The TPM needs the ability to write values to the NV store during manufacturing. It is possible that the values written at this time would require authorization during normal TPM use. The actual enforcement of these authorizations during manufacturing would cause numerous problems for the manufacturer.

The TPM will not enforce the NV authorization restrictions until the execution of a TPM_NV_DefineSpace with the handle of TPM_NV_INDEX_LOCK.

The 'D' bit indicates an NV index defined (typically) during manufacturing and then locked. While nvLocked is FALSE, indices with the 'D' set can be defined, deleted, or redefined as desired. Once nvLocked is set TRUE, the 'D' bit indices are locked. They cannot be defined, deleted or redefined.

nvLocked has the lifetime of the endorsement key.

End of informative comment

1. The TPM MUST NOT enforce the NV authorizations (auth values, PCR etc.) prior to the execution of TPM_NV_DefineSpace with an index of TPM_NV_INDEX_LOCK
   a. While the TPM is not enforcing NV authorizations, the TPM SHALL allow the use of TPM_NV_DefineSpace in any operational state (disabled, deactivated)

© ISO/IEC 2009 All rights reserved

Copyright International Organization for Standardization
Provided by IHS under license with ISO
No reproduction or networking permitted without license from IHS
Not for Resale

30. Delegation Model

Start of informative comment

The TPM Owner is an entity with a single “super user” privilege to control TPM operation. Thus if any aspect of a TPM requires management, the TPM Owner must perform that task himself or reveal his privilege information to another entity. This other entity thereby obtains the privilege to operate all TPM controls, not just those intended by the Owner. Therefore the Owner often must have greater trust in the other entity than is strictly necessary to perform an arbitrary task.

This delegation model addresses this issue by allowing delegation of individual TPM Owner privileges (the right to use individual Owner authorized TPM commands) to individual entities, which may be trusted processes.

Basic requirements:

Consumer user does not need to enter or remember a TPM Owner password. This is an ease of use and security issue. Not remembering the password may lead to bad security practices, increased tech support calls and lost data.

Role based administration and separation of duty. It should be possible to delegate just enough Owner privileges to perform some administration task or carry out some duty, without delegating all Owner privileges.

TPM should support multiple trusted processes. When a platform has the ability to load and execute multiple trusted processes then the TPM should be able to participate in the protection of secrets and proper management of the processes and their secrets. In fact, the TPM most likely is the root of storage for these values. The TPM should enable the proper management, protection and distribution of values held for the various trusted processes that reside on the same platform.

Trusted processes may require restrictions. A fundamental security tenet is the principle of least privilege, that is, to limit process functionality to only the functions necessary to accomplish the task. This delegation model provides a building block that allows a system designer to create single purpose processes and then ensure that the process only has access to the functions that it requires to complete the task.

Maintain the current authorization structure and protocols. There is no desire to remove the current TPM Owner and the protocols that authorize and manage the TPM Owner. The capabilities are a delegation of TPM Owner responsibilities. The delegation allows the TPM Owner to delegate some or all of the actions that a TPM Owner can perform. The TPM Owner has complete control as to when and if the capability delegation is in use.

End of informative comment

30.1 Table Requirements

Start of informative comment

No ocean front property in table – We want the table to be virtually unlimited in size. While we need some storage, we do not want to pick just one number and have that be the min and max. This drives the need for the ability to save, off the TPM, delegation elements.

Revoking a delegation, does not affect other **delegations – The TPM Owner may, at any time, determine that a delegation is no longer appropriate. The TPM Owner needs to be able to ensure the revocation of all delegations in the same family. The TPM Owner also wants to ensure that revocation done in one family does not affect any other family of delegations.**

Table seeded by OEM – The OEM should do the seeding of the table during manufacturing. This allows the OEM to ship the platform and make it easy for the platform owner to startup the first time.

--`,,```,,,,````-`-`,,`,,`,`,,`---

© ISO/IEC 2009 – All rights reserved
Copyright International Organization for Standardization
Provided by IHS under license with ISO
No reproduction or networking permitted without license from IHS
Not for Resale

The definition of manufacturing in this context includes any time prior to or including the time the user first turns on the platform.

Table not tied to a TPM owner – The table is not tied to the existence of a TPM owner. This facilitates the seeding of the table by the OEM.

External delegations need authorization and assurance of **revocation – When a delegation is held external to the TPM, the TPM must ensure authorization of the delegation when loading the delegation. Upon revocation of a family or other family changes the TPM must ensure that prior valid delegations are not successfully loaded.**

90% case, no need for external store – The normal case should be that the platform does not need to worry about having external delegations. This drives the need for some NV storage to hold a minimum number of table rows.

End of informative comment

30.2 How this works

Start of informative comment

The existing TPM owner authorization model is that certain TPM commands require the authorization of the TPM Owner to operate. The authorization value is the TPM Owners token. Using the token to authorize the command is proof of TPM Ownership. There is only one token and knowledge of this token allows all operations that require proof of TPM Ownership.

This extension allows the TPM Owner to create a new AuthData value and to delegate some of the TPM Ownership rights to the new AuthData value.

The use model of the delegation is to create an authorization session (DSAP) using the delegated AuthData value instead of the TPM Owner token. This allows delegation to work without change to any current command.

The intent is to permit delegation of selected Owner privileges to selected entities, be they local or remote, separate from the current software environment or integrated into the current software environment. Thus Owner privileges may be delegated to entities on other platforms, to entities (trusted processes) that are part of the normal software environment on the Owner's platform, or to a minimalist software environment on the Owner's platform (created by booting from a CDROM, or special disk partition), for example.

Privileges may be delegated to a particular entity via definition of a particular process on the Owner's platform (by dictating PCR values), and/or by stipulating a particular AuthData value. The resultant TPM_DELEGATE_OWNER_BLOB and any AuthData value must be passed by the Owner to the chosen entity.

Delegation to an external entity (not on the Owner's platform) probably requires an AuthData value and a NULL PCR selection. (But the AuthData value might be sealed to a desired set of PCRs in that remote platform.)

Delegation to a trusted process provided by the local OS requires a PCR that indicates the trusted process. The authorization token should be a fixed value (any well known value), since the OS has no means to safely store the authorization token without sealing that token to the PCR that indicates the trusted process. It is suggested that the value 0x111…111 be used.

Delegation to a specially booted entity requires either a PCR or an authorization token, and preferably both, to recognize both the process and the fact that the Owner wishes that process to execute.

The central delegation data structure is a set of tables. These tables indicate the command ordinals delegated by the TPM Owner to a particular defined environment. The tables allow the distinction of delegations belonging to different environments.

© ISO/IEC 2009 All rights reserved

Copyright International Organization for Standardization
Provided by IHS under license with ISO
No reproduction or networking permitted without license from IHS
Not for Resale

The TPM is capable of storing internally a few table elements to enable the passing of the delegation information from an entity that has no access to memory or storage of the defined environment.

The number of delegations that the tables can hold is a dynamic number with the possibility of adding or deleting entries at any time. As the total number is dynamic, and possibly large, the TPM provides a mechanism to cache the delegations. The cache of a delegation must include integrity and confidentiality. The term for the encrypted cached entity is blob. The blob contains a counter (verificationCount) validated when the TPM loads the blob.

An Owner uses the counter mechanism to prevent the use of undesirable blobs; they increment verificationCount inside the TPM and insert the current value of verificationCount into selected table elements, including temporarily loaded blobs. (This is the reason why a TPM must still load a blob that has an incorrect verificationCount.) An Owner can verify the delegation state of his platform (immediately after updating verificationCount) by keeping copies of the elements that have just been given the current value of verificationCount, signing those copies, and sending them to a third party.

Verification probably requires interaction with a third party because acceptable table profiles will change with time and the most important reason for verification is suspicion of the state of a TOS in a platform. Such suspicion implies that the verification check must be done by a trusted security monitor (perhaps separate trusted software on another platform or separate trusted software on CDROM, for example). The signature sent to the third party must include a freshness value, to prevent replay attacks, and the security monitor must verify that a response from the third party includes that freshness value. In situations where the highest confidence is required, the third party could provide the response by an out-of-band mechanism, such as an automated telephone service with spoken confirmation of acceptability of platform state and freshness value.

A challenger can verify an entire family using a single transport session with logging, that increments the verification count, updates the verification count in selected blobs, reads the tables and obtains a single transport session signature over all of the blobs in a family.

If no Owner is installed, the delegation mechanisms are inoperative and third party verification of the tables is impossible, but tables can still be administered and corrected. (See later for more details.)

To perform an operation using the delegation the entity establishes an authorization session and uses the delegated AuthData value for all HMAC calculations. The TPM validates the AuthData value, and in the case of defined environments checks the PCR values. If the validation is successful, the TPM then validates that the delegation allows the intended operation.

There can be at least two delegation rows stored in non-volatile storage inside a TPM, and these may be changed using Owner privilege or delegated Owner privilege. Each delegation table row is a member of a family, and there can be at least eight family rows stored in non-volatile storage inside a TPM. An entity belonging to one family can be delegated the privilege to create a new family and edit the rows in its own family, but no other family.

In addition to tying together delegations, the family concept and the family table also provides the mechanism for validation and revocation of exported delegate table rows, as well as the mechanism for the platform user to perform validation of all delegations in a family.

End of informative comment

30.3 Family Table

Start of informative comment

The family table has three main purposes.

1 - To provide for the grouping of rows in the TPM_DELEGATE_TABLE; entities identified in delegate table rows as belonging to the same family can edit information in the other delegate table rows with the same family ID. This allows a family to manage itself and provides an easier mechanism during upgrades.

© ISO/IEC 2009 – All rights reserved
Copyright International Organization for Standardization
Provided by IHS under license with ISO
No reproduction or networking permitted without license from IHS
Not for Resale

2 - To provide the validation and revocation mechanism for exported TPM_DELEGATE_ROWS and those stored on the TPM in the delegation table

3 - To provide the ability to perform validation of all delegations in a family

The family table must have eight rows, and may have more. The maximum number of rows is TPM vendor-defined and is available using the TPM_GetCapability command.

As the family table has a limited number of rows, there is the possibility that this number could be insufficient. However, the ability to create a virtual amount of rows, like done for the TPM_DELEGATE_TABLE would create the need to have all of the validation and revocation mechanisms that the family table provides for the delegate table. This could become a recursive process, so for this version of the specification, the recursion stops at the family table.

The family table contains four pieces of information: the family ID, the family label, the family verification count, and the family flags.

The family ID is a 32-bit value that provides a sequence number of the families in use.

The family label is a one-byte field that family table manager software would use to help identify the information associated with the family. Software must be able to map the numeric value associated with each family to the ASCII-string family name displayable in the user interface.

The family verification count is a 32-bit sequence number that identifies the last outside verification and attestation of the family information.

Initialization of the family table occurs by using the TPM_Delegate_Manage command with the TPM_FAMILY_CREATE option.

The verificationCount parameter enables a TPM to check that all rows of a family in the delegate table are approved (by an external verification process), even if rows have been stored off-TPM.

The family flags allow the use and administration of the family table row, and its associated delegate table rows.

Row contents

Family ID – 32-bits

Row label – One byte

Family verification count – 32-bits

Family enable/disable use/admin flags – 32-bits

End of informative comment

30.4 Delegate Table

Start of informative comment

The delegate table has three main purposes, from the point of view of the TPM. This table holds:

The list of ordinals allowable for use by the delegate

The identity of a process that can use the ordinal list

The AuthData value to use the ordinal list

The delegate table has a minimum of two (2) rows; the maximum number of rows is TPM vendor-defined and is available using the TPM_GetCapability command. Each row represents a delegation and, optionally, an assignment of that delegation to an identified trusted process.

The non-volatile delegate rows permit an entity to pass delegation rows to a software environment without regard to shared memory between the entity and the software environment. The size of the delegate table does not restrict the number of delegations because TPM_Delegate_CreateOwnerDelegation can create blobs for use in a DSAP session, bypassing the delegate table.

© ISO/IEC 2009 All rights reserved

Copyright International Organization for Standardization
Provided by IHS under license with ISO
No reproduction or networking permitted without license from IHS
Not for Resale

The TPM Owner controls the tables that control the delegations, but (recursively) the TPM Owner can delegate the management of the tables to delegated entities. Entities belonging to a particular group (family) of delegation processes may edit delegate table entries that belong to that family.

After creation of a delegation entry there is no restriction on the use of the delegation in a properly authorized session. The TPM Owner has properly authorized the creation of the delegation so the use of the delegation occurs whenever the delegate wishes to use it.

The rows of the delegate table held in non-volatile storage are only changeable under TPM Owner authorization.

The delegate table contains six pieces of information: PCR information, the AuthData value for the delegated capabilities, the delegation label, the family ID, the verification count, and a profile of the capabilities that are delegated to the trusted process identified by the PCR information.

Row Elements

ASCII label – Label that provides information regarding the row. This is not a sensitive item.

Family ID – The family that the delegation belongs to; this is not a sensitive item.

Verification count – Specifies the version, or generation, of this row; version validity information is in the family table. This is not a sensitive value.

Delegated capabilities – The capabilities granted, by the TPM Owner, to the identified process. This is not a sensitive item.

Authorization and Identity

The creator of the delegation sets the AuthData value and the PCR selection. The creator is responsible for the protection and dissemination of the AuthData value. This is a sensitive value.

End of informative comment

1. The TPM_DELEGATE_TABLE MUST have at least two (2) rows; the maximum number of table rows is TPM-vendor defined and MUST be reported in response to a TPM_GetCapability command
2. The AuthData value and the PCR selection must be set by the creator of the delegation

30.5 Delegation Administration Control

Start of informative comment

The delegate tables (both family and delegation) present some control problems. The tables must be initialized by the platform OEM, administered and controlled by the TPM Owner, and reset on changes of TPM Ownership. To provide this level of control there are three phases of administration with different functions available in the phases.

The three phases of table administration are; manufacturing (P1), no-owner (P2) and owner present (P3). These three phases allow different types of administration of the delegation tables.

Manufacturing (P1)

A more accurate definition of this phase is open, un-initialized and un-owned. It occurs after TPM manufacturing and as a result of TPM_OwnerClear or TPM_ForceClear.

In P1 TPM_Delegate_Manage can initialize and manage non-volatile family rows in the TPM. TPM_Delegate_LoadOwnerDelegation can load non-volatile delegation rows in the TPM.

Attacks that attempt to burnout the TPM's NV storage are frustrated by the NV store's own limits on the number of writes when no Owner is installed.

© ISO/IEC 2009 – All rights reserved
Copyright International Organization for Standardization
Provided by IHS under license with ISO
No reproduction or networking permitted without license from IHS
Not for Resale

No-Owner (P2)

This phase occurs after the platform has been properly setup. The setup can occur in the platform manufacturing flow, during the first boot of the platform or at any time when the platform owner wants to lock the table settings down. There is no TPM Owner at this time.

TPM_Delegate_Manage locks both the family and delegation rows. This lock can be opened only by the Owner (after the Owner has been installed, obviously) or by the act of removing the Owner (even if no Owner is installed). Thus locked tables can be unlocked by asserting Physical Presence and executing TPM_ForceClear, without having to install an Owner.

In P2, the relevant TPM_Delegate_xxx commands all return the error TPM_DELEGATE_LOCKED. This is not an issue as there is no TPM Owner to delegate commands, so the inability to change the tables or create delegations does not affect the use of the TPM.

Owned (P3)

In this phase, the TPM has a TPM Owner and the TPM Owner manages the table as the Owner sees fit. This phase continues until the removal of the TPM Owner.

Moving from P2 to P3 is automatic upon establishment of a TPM Owner. Removal of the TPM Owner automatically moves back to P1.

The TPM Owner always has the ability to administer any table. The TPM Owner may delegate the ability to manipulate a single family or all families. Such delegations are operative only if delegations are enabled.

End of informative comment

1. When DelegateAdminLock is TRUE the TPM MUST disallow any changes to the delegate tables
2. With a TPM Owner installed, the TPM Owner MUST authorize all delegate table changes

30.5.1 Control in Phase 1

Start of informative comment

The TPM starts life in P1. The TPM has no owner and the tables are empty. It is desirable for the OEM to initialize the tables to allow delegation to start immediately after the Owner decides to enable delegation. As the setup may require changes and validation, a simple mechanism of writing to the area once is not a valid option.

TPM_Delegate_Manage and TPM_Delegate_LoadOwnerDelegation allow the OEM to fill the table, read the public parts of the table, perform reboots, reset the table and when finally satisfied as to the state of the platform, lock the table.

Alternatively, the OEM can leave the tables NULL and turn off table administration leaving the TPM in an unloaded state waiting for the eventual TPM Owner to fill the tables, as they need.

Flow to load tables

Default values of DelegateAdminLock are set either during manufacturing or are the result of TPM_OwnerClear or TPM_ForceClear.

TPM_Delegate_Manage verifies that DelegateAdminLock is FALSE and that there is no TPM Owner. The command will therefore load or manipulate the family tables as specified in the command.

TPM_Delegate_LoadOwnerDelegation verifies that DelegateAdminLock is FALSE and no TPM owner is present. The command loads the delegate information specified in the command.

End of informative comment

© ISO/IEC 2009 All rights reserved

Copyright International Organization for Standardization
Provided by IHS under license with ISO
No reproduction or networking permitted without license from IHS
Not for Resale

30.5.2 Control in Phase 2

Start of informative comment

In phase 2, no changes are possible to the delegate tables. The platform owner must install a TPM Owner and then manage the tables, or use TPM_ForceClear to revert to phase 1.

End of informative comment

30.5.3 Control in Phase 3

Start of informative comment

The TPM_DELEGATE_TABLE requires commands that manage the table. These commands include filling the table, turning use of the table on or off, turning administration of the table on or off, and using the table.

The commands are:

TPM_Delegate_Manage – Manages the family table on a row-by-row basis: creates a new family, enables/disables use of a family table row and delegate table rows that share the same family ID, enables/disables administration of a family's rows in both the family table and the delegate table, and invalidates an existing family.

TPM_Delegate_CreateOwnerDelegation increments the family verification count (if desired) and delegates the Owner's privilege to use a set of command ordinals, by creating a blob. Such blobs can be used as input data for TPM_DSAP or TPM_Delegate_LoadOwnerDelegation. Incrementing the verification count and creating a delegation must be an atomic operation. Otherwise no delegations are operative after incrementing the verification count.

TPM_Delegate_LoadOwnerDelegation loads a delegate blob into a non-volatile delegate table row, inside the TPM.

TPM_Delegate_ReadTable is used to read from the TPM the public contents of the family and delegate tables that are stored on the TPM.

TPM_Delegate_UpdateVerification sets the verificationCount in an entity (a blob or a delegation row) to the current family value, in order that the delegations represented by that entity will continue to be accepted by the TPM.

TPM_Delegate_VerifyDelegation loads a delegate blob into the TPM, and returns success or failure, depending on whether the blob is currently valid.

TPM_DSAP – opens a deferred authorization session, using either an input blob (created by TPM_Delegate_CreateOwnerDelegation) or a cached blob (loaded by TPM_Delegate_LoadOwnerDelegation into one of the TPM's non-volatile delegation rows).

End of informative comment

30.6 Family Verification

Start of informative comment

The platform user may wish to have confirmation that the delegations in use provide a coherent set of delegations. This process would require some evaluation of the processes granted delegations. To assist in this confirmation the TPM provides a mechanism to group all delegations of a family into a signed blob. The signed blob allows the verification agent to look at the delegations, the processes involved and make an assessment as the validity of the delegations. The third party then sends back to the platform owner the results of the assessment.

To perform the creation of the signed blob the platform owner needs the ability to group all of the delegations of a single family into a transport session. The platform owner also wants an assurance that no management of the table is possible during the verification.

© ISO/IEC 2009 – All rights reserved
Copyright International Organization for Standardization
Provided by IHS under license with ISO
No reproduction or networking permitted without license from IHS
Not for Resale

This verification does not prove to a third party that the platform owner is not cheating. There is nothing to prevent the platform owner from performing the validation and then adding an additional delegation to the family.

Here is one example protocol that retrieves the information necessary to validate the rows belonging to a particular family. Note that the local method of executing the protocol must prevent a man-in-the-middle attack using the nonce supplied by the user.

The TPM Owner can increment the family verification count or use the current family verification count. Using the current family verification count carries the risk that unexamined delegation blobs permit undesirable delegations. Using an incremented verification count eliminates that risk. The entity gathering the verification data requires Owner authorization or access to a delegation that grants access to transport session commands, plus other commands depending on whether verificationCount is to be incremented. This delegation could be a trusted process that can use the delegations because of its PCR measurements, a remote entity that can use the delegations because the Owner has sent it a TPM_DELEGATE_OWNER_BLOB and AuthData value, or the host platform booted from a CDROM that can use the delegations because of its PCR measurements, and TPM_DELEGATE_OWNER_BLOB and AuthData value submitted by the Owner, for example.

Verification using the current verificationCount

The gathering entity requires access to a delegation that grants access to at least the ordinals to perform a transport session, plus TPM_Delegate_ReadTable and TPM_Delegate_VerifyDelegation.

The TPM Owner creates a transport session with the “no other activity” attribute set. This ensures notification if other operations occur on the TPM during the validation process. (If other operations do occur, the validation processes may have been subverted.) All subsequent commands listed are performed using the transport session.

TPM_Delegate_ReadTable displays all public values (including the permissions and PCR values) in the TPM.

TPM_Delegate_VerifyDelegation loads each cached blob, with all public values (including the permissions and PCR values) in plain text.

After verifying all blobs, TPM_ReleaseTransportSigned signs the list of transactions.

The gathering entity sends the log of the transport session plus any supporting information to the validation entity, which evaluates the signed transport session log and informs the platform owner of the result of the evaluation. This could be an out-of-band process.

Verification using an incremented verificationCount

The gathering entity requires Owner authorization or access to a delegation that grants access to at least the ordinals to perform a transport session, plus TPM_Delegate_CreateOwnerDelegation, TPM_Delegate_ReadTable, and TPM_Delegate_UpdateVerification.

The TPM Owner creates a transport session with the “no other activity” attribute set.

To increment the count the TPM Owner (or a delegate) must use TPM_Delegate_CreateOwnerDelegation with increment == TRUE. That blob permits creation of new delegations or approval of existing tables and blobs. That delegation must set the PCRs of the desired (local) process and the desired AuthData value of the process. As noted previously, AuthData values should be a fixed value if the gathering entity is a trusted process that is part of the normal software environment.

If new delegations are to be created, TPM_Delegate_CreateOwnerDelegation must be used with increment == FALSE.

If existing blobs and delegation rows are to be reapproved, TPM_Delegate_UpdateVerification must be used to install the new value of verificationCount into those existing blobs and non-volatile rows.

© ISO/IEC 2009 All rights reserved

Copyright International Organization for Standardization
Provided by IHS under license with ISO
No reproduction or networking permitted without license from IHS
Not for Resale

This exposes the blobs' public information (including the permissions and PCR values) in plain text to the transport session.

TPM_Delegate_ReadTable then exposes all public values (including the permissions and PCR values) of tables to the transport session.

Again, after verifying all blobs, TPM_ReleaseTransportSigned signs the list of transactions.

End of informative comment

30.7 Use of commands for different states of TPM

Start of informative comment

Use the ordinal table to determine when the various commands are available for use

End of informative comment

30.8 Delegation Authorization Values

Start of informative comment

This section describes why, when a PCR selection is set, the AuthData value may be a fixed value, and, when the PCR selection is null, the delegation creator must select an AuthData value.

A PCR value is an indication of a particular (software) environment in the local platform. Either that PCR value indicates a trusted process or not. If the trusted process is to execute automatically, there is no point in allocating a meaningful AuthData value. (The only way the trusted process could store the AuthData value is to seal it to the process's PCR values, but the delegation mechanism is already checking the process's PCR values.) If execution of the trusted process is dependent upon the wishes of another entity (such as the Owner), the AuthData value should be a meaningful (private) value known only to the TPM, the Owner, and that other entity. Otherwise the AuthData value should be a fixed, well known, value.

If the delegation is to be controlled from a remote platform, these simple delegation mechanisms provide no means for the platform to verify the PCRs of that remote platform, and hence access to the delegation must be based solely upon knowledge of the AuthData value.

End of informative comment

30.8.1 Using the authorization value

Start of informative comment

To use a delegation the TPM will enforce any PCR selection on use. The use definition is any command that uses the delegation authorization value to take the place of the TPM Owner authorization.

PCR Selection defined

In this case, the delegation has a PCR selection structure defined. Each time the TPM uses the delegation authorization value instead of the TPM Owner value the TPM would validate that the current PCR settings match the settings held in the delegation structure. The PCR selection includes the definition of localities and checks of locality occur with the checking of the PCR values. The TPM enforces use of the correct authorization value, which may or may not be a meaningful (private) value.

PCR selection NULL

In this case, the delegation has no PCR selection structure defined. The TPM does not enforce any particular environment before using the authorization value. Mere knowledge of the value is sufficient.

End of informative comment

© ISO/IEC 2009 – All rights reserved
Copyright International Organization for Standardization
Provided by IHS under license with ISO
No reproduction or networking permitted without license from IHS
Not for Resale

30.9 DSAP description

Start of informative comment

The DSAP opens a deferred auth session, using either a TPM_DELEGATE_BLOB as input parameter or a reference to the TPM_DELEGATE_TABLE_ROW, stored inside the TPM. The DSAP command creates an ephemeral secret to authenticate a session. The purpose of this section is to illustrate the delegation of user keys or TPM Owner authorization by creating and using a DSAP session without regard to a specific command.

A key defined for a certain usage (e.g. TPM_KEY_IDENTITY) can be applied to different functions within the use model (e.g. TPM_Quote or TPM_CertifiyKey). If an entity knows the AuthData for the key (key.usageAuth) it can perform all the functions, allowed for that use model of that particular key. This entity is also defined as delegation creation entity, since it can initiate the delegation process. Assume that a restricted usage entity should only be allowed to execute a subset or a single functions denoted as TPM_Example, within the specific use model of a key (e.g. allow the usage of a TPM_IDENTITY_KEY only for Certifying Keys, but no other function). This use model points to the selection of the DSAP as the authorization protocol to execute the TPM_Example command.

To perform this scenario the delegation creation entity must know the AuthData for the key (key.usageAuth). It then has to initiate the delegation by creating a TPM_DELEGATE_KEY_BLOB via the TPM_Delegate_CreateKeyDelegation command. As a next step the delegation creation entity has to pass the TPM_DELEGATE_KEY_BLOB and the delegation AuthData (TPM_DELEGATE_SENSITIVE.authValue) to the restricted usage entity. The specification offers the TPM_DelTable_ReadAuth mechanism to perform this function. Other mechanisms may be used.

The restricted usage entity can now start an TPM_DSAP session by using the TPM_DELEGATE_KEY_BLOB as input.

For the TPM_Example command, the inAuth parameter provides the authorization to execute the command. The following table shows the commands executed, the parameters created and the wire formats of all of the information.

<inParamDigest> is the result of the following calculation: SHA1(ordinal, inArgOne, inArgTwo). <outParamDigest> is the result of the following calculation: SHA1(returnCode, ordinal, outArgOne). inAuthSetupParams refers to the following parameters, in this order: authLastNonceEven, nonceOdd, continueAuthSession. OutAuthSetupParams refers to the following parameters, in this order: nonceEven, nonceOdd, continueAuthSession.

In addition to the two even nonces generated by the TPM (authLastNonceEven and nonceEven) that are used for TPM_OIAP, there is a third, labeled nonceEvenOSAP that is used to generate the shared secret. For every even nonce, there is also an odd nonce generated by the system.

© ISO/IEC 2009 All rights reserved

Copyright International Organization for Standardization
Provided by IHS under license with ISO
No reproduction or networking permitted without license from IHS
Not for Resale

Caller	On the wire	Dir	TPM
Send TPM_DSAP	TPM_DSAP keyHandle nonceOddOSAP entityType entityValue	→	Decrypt sensitiveArea of entityValue If entityValue==TPM_ET_DEL_BLOB verify the integrity of the blob, and if a TPM_DELEGATE_KEY_BLOB is input verify that KeyHandle and entityValue match Create session & authHandle Generate authLastNonceEven Save authLastNonceEven with authHandle Generate nonceEvenOSAP Generate sharedSecret = HMAC(sensitiveArea.authValue., nonceEvenOSAP, nonceOddOSAP) Save keyHandle, sharedSecret with authHandle and permissions
Save authHandle, authLastNonceEven Generate sharedSecret = HMAC(sensitiveArea.authValue, nonceEvenOSAP, nonceOddOSAP) Save sharedSecret	authHandle, authLastNonceEven nonceEvenOSAP	←	Returns
Generate nonceOdd & save with authHandle. Compute inAuth = HMAC (sharedSecret, inParamDigest, inAuthSetupParams)			
Send TPM_Example	tag paramSize ordinal inArgOne inArgTwo authHandle nonceOdd continueAuthSession inAuth	→	Verify authHandle points to a valid session, mismatch returns TPM_AUTHFAIL Retrieve authLastNonceEven from internal session storage HM = HMAC (sharedSecret, inParamDigest, inAuthSetupParams) Compare HM to inAuth. If they do not compare return with TPM_AUTHFAIL Check if command ordinal of TPM_Example is allowed in permissions. If not return TPM_DISABLED_CMD Execute TPM_Example and create returnCode Generate nonceEven to replace authLastNonceEven in session Set resAuth = HMAC(sharedSecret, outParamDigest, outAuthSetupParams)
Save nonceEven HM = HMAC(sharedSecret, outParamDigest, outAuthSetupParams) Compare HM to resAuth. This verifies returnCode and output parameters.	tag paramSize returnCode outArgOne nonceEven continueAuthSession resAuth	←	Return output parameters If continueAuthSession is FALSE then destroy session

© ISO/IEC 2009 – All rights reserved
Copyright International Organization for Standardization
Provided by IHS under license with ISO
No reproduction or networking permitted without license from IHS
Not for Resale

Suppose now that the TPM user wishes to send another command using the same session to operate on the same key. For the purposes of this example, we will assume that the same ordinal is to be used (TPM_Example). To re-use the previous session, the continueAuthSession output Boolean must be TRUE.

The following table shows the command execution, the parameters created and the wire formats of all of the information.

In this case, authLastNonceEven is the nonceEven value returned by the TPM with the output parameters from the first execution of TPM_Example.

Caller	On the wire	Dir	TPM
Generate nonceOdd Compute inAuth = HMAC (sharedSecret, inParamDigest, inAuthSetupParams) Save nonceOdd with authHandle			
Send TPM_Example	tag paramSize ordinal inArgOne inArgTwo nonceOdd continueAuthSession inAuth	→	Retrieve authLastNonceEven from internal session storage HM = HMAC (sharedSecret, inParamDigest, inAuthSetupParams) Compare HM to inAuth. If they do not compare return with TPM_AUTHFAIL Execute TPM_Example and create returnCode Generate nonceEven to replace authLastNonceEven in session Set resAuth = HMAC(sharedSecret, outParamDigest, outAuthSetupParams)
Save nonceEven HM = HMAC(sharedSecret, outParamDigest, outAuthSetupParams) Compare HM to resAuth. This verifies returnCode and output parameters.	tag paramSize returnCode outArgOne nonceEven continueAuthSession resAuth	←	Return output parameters If continueAuthSession is FALSE then destroy session

The TPM user could then use the session for further authorization sessions or terminate it in the ways that have been described above in TPM_OIAP. Note that termination of the DSAP session causes the TPM to destroy the shared secret.

End of informative comment

3. The DSAP session MUST enforce any PCR selection on use. The use definition is any command that uses the delegation authorization value to take the place of the TPM Owner authorization.

© ISO/IEC 2009 All rights reserved

Copyright International Organization for Standardization
Provided by IHS under license with ISO
No reproduction or networking permitted without license from IHS
Not for Resale

31. Physical Presence

Start of informative comment

Physical presence is a signal from the platform to the TPM that indicates the operator manipulated the hardware of the platform. Manipulation would include depressing a switch, setting a jumper, depressing a key on the keyboard or some other such action.

ISO/IEC 11889 does not specify an implementation technique. The guideline is the physical presence technique should make it difficult or impossible for rogue software to assert the physical presence signal.

A PC-specific physical presence mechanism might be an electrical connection from a switch, or a program that loads during power on self-test.

End of informative comment

The TPM MUST support a signal from the platform for the assertion of physical presence. A TCG platform specific specification MAY specify what mechanisms assert the physical presence signal.

The platform manufacturer MUST provide for the physical presence assertion by some physical mechanism.

31.1 Use of Physical Presence

Start of informative comment

For control purposes there are numerous commands on the TPM that require TPM Owner authorization. Included in this group of commands are those that turn the TPM on or off and those that define the operating modes of the TPM. The TPM Owner always has complete control of the TPM. What happens in two conditions: there is no TPM Owner or the TPM Owner forgets the TPM Owner AuthData value. Physical presence allows for an authorization to change the state in these two conditions.

No TPM Owner

This state occurs when the TPM ships from manufacturing (it can occur at other times also). There is no TPM Owner. It is imperative to protect the TPM from remote software processes that would attempt to gain control of the TPM. To indicate to the TPM that the TPM operating state can change (allow for the creation of the TPM Owner) the human asserts physical presence. The physical presence assertion than indicates to the TPM that changing the operating state of the TPM is authorized.

Lost TPM Owner authorization

In the case of lost, or forgotten, authorization there is a TPM Owner but no way to manage the TPM. If the TPM will only operate with the TPM Owner authorization then the TPM is no longer controllable. Here the operator of the machine asserts physical presence and removes the current TPM Owner. The assumption is that the operator will then immediately take ownership of the TPM and insert a new TPM Owner AuthData value.

Operator disabling

Another use of physical presence is to indicate that the operator wants to disable the use of the TPM. This allows the operator to temporarily turn off the TPM but not change the permanent operating mode of the TPM as set by the TPM Owner.

End of informative comment

© ISO/IEC 2009 – All rights reserved
Copyright International Organization for Standardization
Provided by IHS under license with ISO
No reproduction or networking permitted without license from IHS
Not for Resale

32. TPM Internal Asymmetric Encryption

Start of Informative comment

For asymmetric encryption schemes, the TPM is not required to perform the blocking of information where that information cannot be encrypted in a single cryptographic operation. The schemes TPM_ES_RSAESOAEP_SHA1_MGF1 and TPM_ES_RSAESPKCSV15 allow only single block encryption. When using these schemes, the caller to the TPM must perform any blocking and unblocking outside the TPM. It is the responsibility of the caller to ensure that multiple blocks are properly protected using a chaining mechanism.

Note that there are inherent dangers associated with splitting information so that it can be encrypted in multiple blocks with an asymmetric key, and then chaining together these blocks together. For example, if an integrity check mechanism is not used, an attacker can encrypt his own data using the public key, and substitute this rogue block for one of the original blocks in the message, thus forcing the TPM to replace part of the message upon decryption.

There is also a more subtle attack to discover the data encrypted in low-entropy blocks. The attacker makes a guess at the plaintext data, encrypts it, and substitutes the encrypted guess for the original block. When the TPM decrypts the complete message, a successful decryption will indicate that his guess was correct.

There are a number of solutions which could be considered for this problem – One such solution for TPMs supporting symmetric encryption is specified in PKCS#7, section 10, and involves using the public key to encrypt a symmetric key, then using that symmetric key to encrypt the long message.

For TPMs without symmetric encryption capabilities, an alternative solution may be to add random padding to each message block, thus increasing the block's entropy.

End of informative comment

1. For a TPM_UNBIND command where the parent key has pubKey.algorithmId equal to TPM_ALG_RSA and pubKey.encScheme set to TPM_ES_RSAESPKCSv15 the TPM SHALL NOT expect a PAYLOAD_TYPE structure to prepend the decrypted data.
2. The TPM MUST perform the encryption or decryption in accordance with the specification of the encryption scheme, as described below.
3. When a null terminated string is included in a calculation, the terminating null SHALL NOT be included in the calculation.

32.1.1 TPM_ES_RSAESOAEP_SHA1_MGF1

1. The encryption and decryption MUST be performed using the scheme RSA_ES_OAEP defined in [P1363 Clause 12.2.1] using SHA1 as the hash algorithm for the encoding operation.
2. Encryption
   a. The OAEP encoding P parameter MUST be the 4 character string "TCPA".
   b. While the ISO/IEC 11889 now controls this specification the string value will NOT change to allow for interoperability and backward compatibility with TCPA 1.1 TPMs
   c. If there is an error with the encryption, the TPM must return the error TPM_ENCRYPT_ERROR.
3. Decryption
   a. The OAEP decoding P parameter MUST be the 4 character string "TCPA".
   b. While the ISO/IEC 11889 now controls this specification the string value will NOT change to allow for interoperability and backward compatibility with TCPA 1.1 TPM's
   c. If there is an error with the decryption, the TPM must return the error TPM_DECRYPT_ERROR.

--`,,```,,,,````-`-`,,`,,`,`,,`---
© ISO/IEC 2009 – All rights reserved

Copyright International Organization for Standardization
Provided by IHS under license with ISO
No reproduction or networking permitted without license from IHS
Not for Resale

32.1.2 TPM_ES_RSAESPKCSV15

1. The encryption MUST be performed using the scheme RSA_ES_PKCSV15 defined in [PKCS #1v2.0: 7.2].
2. Encryption
   a. If there is an error with the encryption, return the error TPM_ENCRYPT_ERROR.
3. Decryption
   a. If there is an error with the decryption, return the error TPM_DECRYPT_ERROR.

32.1.3 TPM_ES_SYM_CTR

Start of informative comment

This defines an encryption mode in use with symmetric algorithms. The actual definition is at

http://csrc.nist.gov/publications/nistpubs/800-38a/sp800-38a.pdf

The underlying symmetric algorithm may be AES128, AES192, or AES256. The definition for these algorithms is in the NIST document Appendix E.

The method of incrementing the counter value is different from that used by some standard crypto libraries (e.g. openSSL, Java JCE) that increment the entire counter value. TPM users should be aware of this to avoid errors when the counter wraps.

End of informative comment

1. Given a current counter value, the next counter value is obtained by treating the lower 32 bits of the current counter value as an unsigned 32-bit integer x, then replacing the lower 32 bits of the current counter value with the bits of the incremented integer (x + 1) mod 2^32. This method is described in Appendix B.1 of the NIST document (b=32).

32.1.4 TPM_ES_SYM_OFB

Start of informative comment

This defines an encryption mode in use with symmetric algorithms. The actual definition is at

http://csrc.nist.gov/publications/nistpubs/800-38a/sp800-38a.pdf

The underlying symmetric algorithm may be AES128, AES192, or AES256. The definition for these algorithms is in the NIST document Appendix E.

End of informative comment

32.2 TPM Internal Digital Signatures

Start of informative comment

These values indicate the approved schemes in use by the TPM to generate digital signatures.

TPM 1.1 included only _SHA1 keys. These allowed the TPM_Sign command to sign a hash with no structure. This signature scheme is retained for backward compatibility.

TPM 1.2 added _INFO keys to ensure that a structure, rather than a plain hash, is always signed. For TPM_Sign, this signature scheme signs a new TPM_SIGN_INFO structure. Other ordinals, such as (e.g., TPM_GetAuditDigestSigned, TPM_CertifyKey, TPM_Quote, etc.) inherently sign a structure, so the _SHA1 and _INFO signature schemes produce an identical result.

End of informative comment

The TPM MUST perform the signature or verification in accordance with the specification of the signature scheme, as described below.

© ISO/IEC 2009 – All rights reserved
Copyright International Organization for Standardization
Provided by IHS under license with ISO
No reproduction or networking permitted without license from IHS
Not for Resale

32.2.1 TPM_SS_RSASSAPKCS1v15_SHA1

Start of informative comment

This signature scheme prepends an OID to a SHA-1 digest. The OID, as specified in the normative, is as follows:

PKCS#1 v2.0: 8.1 says to encode the message per PKCS#1 v2.0: 9.2.1.

PKCS#1 v2.0: 9.2.1 says to apply the digest and then add the algorithm ID per Section 11.

PKCS#1 v2.0: Section 11.2.3 for SHA-1 says

{iso(1) identified-organization(3) oiw(14) secsig(3) algorithms(2) 26 }

and also

For each OID, the parameters field associated with this OID in an AlgorithmIdentifier shall have type NULL.

The DER/BER Guide says that the first sub-identifiers are coded as 40 * value1 + value2.

Thus, the OID becomes (with comments):

0x30 SEQUENCE

0x21 33 bytes

0x30 SEQUENCE

0x09 9 bytes

0x06 OID

0x05 5 bytes

0x2b 43 = 40 * 1 (iso) + 3 (identified-organization)

0x0e 14 from 11.2.3

0x03 3 from 11.2.3

0x02 2 from 11.2.3

0x1a 26 from 11.2.3

0x05 NULL (parameters)

0x00 0 bytes

0x04 OCTET

0x14 20 bytes (the SHA-1 digest to follow)

End of informative comment

1. The signature MUST be performed using the scheme RSASSA-PKCS1-v1.5 defined in [PKCS #1v2.0: 8.1] using SHA1 as the hash algorithm for the encoding operation.

32.2.2 TPM_SS_RSASSAPKCS1v15_DER

Start of informative comment

This signature scheme is designed to permit inclusion of DER coded information before signing, which is inappropriate for most TPM capabilities

End of informative comment

1. The signature MUST be performed using the scheme RSASSA-PKCS1-v1.5 defined in [PKCS #1v2.0: 8.1]. The caller must properly format the area to sign using the DER rules. The provided area maximum size is k-11 octets.
2. TPM_Sign SHALL be the only TPM capability that is permitted to use this signature scheme. If a capability other than TPM_Sign is requested to use this signature scheme, it SHALL fail with the error code TPM_INAPPROPRIATE_SIG

© ISO/IEC 2009 All rights reserved

Copyright International Organization for Standardization
Provided by IHS under license with ISO
No reproduction or networking permitted without license from IHS
Not for Resale

32.2.3 TPM_SS_RSASSAPKCS1v15_INFO

Start of informative comment

This signature scheme is designed to permit signatures on arbitrary information but also protect the signature mechanism from being misused.

End of informative comment

1. The scheme MUST work just as TPM_SS_RSASSAPKCS1v15_SHA1 except in the TPM_Sign command
   a. In the TPM_Sign command the scheme MUST use a properly constructed TPM_SIGN_INFO structure, and hash it before signing

32.2.4 Use of Signature Schemes

Start of informative comment

The TPM_SS_RSASSAPKCS1v15_INFO scheme is a new addition for 1.2. It causes a new functioning for 1.1 and 1.2 keys. The following details the use of the new scheme and how the TPM handles signatures and hashing

End of informative comment

1. For the commands (TPM_GetAuditDigestSigned, TPM_TickStampBlob, TPM_ReleaseTransportSigned):
   a. The TPM MUST create a TPM_SIGN_INFO and sign using the TPM_SS_RSASSAPKCS1v15_SHA1 scheme for either _SHA1 or _INFO keys.
2. For the commands (TPM_CMK_CreateTicket, TPM_CertifyKey, TPM_CertifyKey2, TPM_MakeIdentity, TPM_Quote, TPM_Quote2):
   a. Create the structure as defined by the command and sign using the TPM_SS_RSASSAPKCS1v15_SHA1 scheme for either _SHA1 or _INFO keys.
3. For TPM_Sign:
   a. Create the structure as defined by the command and key scheme
   b. If key->sigScheme is TPM_SS_RSASSAPKCS1v15_SHA1, sign the 20 byte parameter
   c. If key->sigScheme is TPM_SS_RSASSAPKCS1v15_DER, sign the DER value.
   d. If key->sigScheme is TPM_SS_RSASSAPKCS1v15_INFO, sign any value using the TPM_SIGN_INFO structure.
4. When data is signed and the data comes from INSIDE the TPM, the TPM MUST do the hash, and prepend the DER encoding correctly before performing the padding and private key operation.
5. When data is signed and the data comes from OUTSIDE the TPM, the software, not the TPM, MUST do the hash.
6. When the TPM knows, or is told by implication, that the hash used is SHA-1, the TPM MUST prepend the DER encoding correctly before performing the padding and private key operation
7. When the TPM does not know, or told by implication, that the hash used is SHA-1, the software, not the TPM) MUST provide the DER encoding to be prepended.
8. The TPM MUST perform the padding and private key operation in any signing operations it does.

© ISO/IEC 2009 – All rights reserved
Copyright International Organization for Standardization
Provided by IHS under license with ISO
No reproduction or networking permitted without license from IHS
Not for Resale

33. Key Usage Table

Start of informative comment

Asymmetric keys (e.g., RSA keys) can do two basic functions: sign/verify and encrypt/decrypt.

TPM_KEY_SIGNING and TPM_KEY_IDENTITY do signature functions.

TPM_KEY_STORAGE, TPM_KEY_BIND, TPM_KEY_MIGRATE, and TPM_KEY_AUTHCHANGE do encryption functions.

End of informative comment

This table summarizes the types of keys associated with a given TPM command.

It is the responsibility of each command to check the key usage prior to executing the command

				First Key						Second Key					
Name		First Key	Second Key	SIGNING	STORAGE	IDENTITY	AUTHCHG	BIND	LEEGACY	SIGNING	STORAGE	IDENTITY	AUTHCHG	BIND	LEGACY
TPM_ActivateIdentity	idKey					x									
TPM_CertifyKey	certKey	inKey		x		x			x	x	x	x		x	x
TPM_CertifyKey2 (Note 3)	inKey	certKey		x	x	x		x	x	x		x			x
TPM_CertifySelfTest	key			x		x			x						
TPM_ChangeAuth	parent	blob			x					2	2	2	2	2	2
TPM_ChangeAuthAsymFinish	parent	ephemeral			x								x		
TPM_ChangeAuthAsymStart	idKey	ephemeral				x							x		
TPM_CMK_ConvertMigration	parent				x										
TPM_CMK_CreateBlob	parent				x										
TPM_CMK_CreateKey	parent				x										
TPM_ConvertMigrationBlob	parent				x										
TPM_CreateMigrationBlob	parent	blob			x					2	2	2	2	2	2
TPM_CreateWrapKey	parent				x										
TPM_Delegate_CreateKeyDelegation	key			x	x	x	x	x	x						
TPM_DSAP	entity			x	x	x	x	x	x						
TPM_EstablishTransport	key				x				x						
TPM_GetAuditDigestSigned	certKey			x		x			x						
TPM_GetAuditEventSigned	certKey			x					x						
TPM_GetCapabilitySigned	key			x		x			x						
TPM_GetPubKey	key			x	x	x	x	x	x						
TPM_KeyControlOwner	key			x	x	x		x	x						
TPM_LoadKey2	parent	inKey			x					x	x	x		x	x
TPM_LoadKey	parent	inKey			x					x	x	x		x	x

© ISO/IEC 2009 All rights reserved

Copyright International Organization for Standardization
Provided by IHS under license with ISO
No reproduction or networking permitted without license from IHS
Not for Resale

TPM_MigrateKey	maKey		1				
TPM_OSAP	entity	x	x	x	x	x	x
TPM_Quote	key	x		x			x
TPM_Quote2	key	x		x			x
TPM_Seal	key		x				
TPM_Sealx	key		x				
TPM_Sign	key	x					x
TPM_UnBind	key					x	x
TPM_Unseal	parent		x				
TPM_ReleaseTransportSigned	key	x					
TPM_TickStampBlob	key	x		x			x

Notes

1 – Key is not a storage key but TPM_MIGRATE_KEY

2 – TPM unable to determine key type

3 – The order is correct; the reason is to support a single auth version.

© ISO/IEC 2009 – All rights reserved
Copyright International Organization for Standardization
Provided by IHS under license with ISO
No reproduction or networking permitted without license from IHS
Not for Resale

34. Direct Anonymous Attestation

Start of informative comment

TPM_DAA_Join and TPM_DAA_Sign are highly resource intensive commands. They require most of the internal TPM resources to accomplish the complete set of operations. A TPM may specify that no other commands are possible during the join or sign operations. To allow other operations to occur, the TPM does allow the TPM_SaveContext command to save off the current join or sign operation.

Operations that occur during a join or sign result in the loss of the join or sign session in favor of the interrupting command.

End of informative comment

1. The TPM MUST support one concurrent TPM_DAA_Join or TPM_DAA_Sign session. The TPM MAY support additional sessions
2. The TPM MAY invalidate a join or sign session upon the receipt of any additional command other than the join/sign or TPM_SaveContext

34.1 TPM_DAA_JOIN

Start of informative comment

TPM_DAA_Join creates new JOIN data. If a TPM supports only one JOIN/SIGN operation, TPM_DAA_Join invalidates any previous DAA attestation information inside a TPM. The JOIN phase of a DAA context requires a TPM to communicate with an issuer. TPM_DAA_Join outputs data to be sent to an issuing authority and receives data from that issuing authority. The operation potentially requires several seconds to complete, but is done in a series of atomic stages and TPM_SaveContext/TPM_LoadContext can be used to cache data off-TPM in between atomic stages.

The JOIN process is designed so a TPM will normally receive exactly the same DAA credentials from a given issuer, no matter how many times the JOIN process is executed and no matter whether the issuer changes his keys. This property is necessary because an issuer must give DAA credentials to a platform after verifying that the platform has the architecture of a trusted platform. Unless the issuer repeats the verification process, there is no justification for giving different DAA credentials to the same platform. Even after repeating the verification process, the issuer should give replacement (different) DAA credentials only when it is necessary to retire the old DAA credentials. Replacement DAA credentials erase the previous DAA history of the platform, at least as far as the DAA credentials from that issuer are concerned. Replacement might be desirable, as when a platform changes hands, for example, in order to eliminate any association via DAA between the seller and the buyer. On the other hand, replacement might be undesirable, since it enables a rogue to rejoin a community from which he has been barred. Replacement is done by submitting a different “count” value to the TPM during a JOIN process. A platform may use any value of “count” at any time, in any order, but only “counts” accepted by the issuer will elicit DAA credentials from that issuer.

The TPM is forced to verify an issuer’s public parameters before using an issuer’s public parameters. This verification provides proof that the public parameters (which include a public key) were approved by an entity that knows the private key corresponding to that public key; in other words that the JOIN has previously been approved by the issuer. This verification is necessary to prevent an attack by a rogue using a genuine issuer’s public parameters, which could reveal the secret created by the TPM using those public parameters. Verification uses a signature (provided by the issuer) over the public parameters.

© ISO/IEC 2009 – All rights reserved

Copyright International Organization for Standardization
Provided by IHS under license with ISO
No reproduction or networking permitted without license from IHS
Not for Resale

The exponent of the issuer's key is fixed at 2^16+1, because this is the only size of exponent that a TPM is required to support. The modulus of the issuer's public key is used to create the pseudonym with which the TPM contacts the issuer. Hence, the TPM cannot produce the same pseudonym for different issuers (who have different keys). The pseudonym is always created using the issuer's first key, even if the issuer changes keys, in order to produce the property described earlier. The issuer proves to the TPM that he has the right to use that first key to create a pseudonym by creating a chain of signatures from the first key to the current key, and submitting those signatures to the TPM. The method has the desirable property that only signatures and the most recent private key need be retained by the issuer: once the latest link in the signature chain has been created, previous private keys can be discarded.

The use of atomic operations minimizes the contiguous time that a TPM is busy with TPM_DAA_Join and hence unavailable for other commands. JOIN can therefore be done as a background activity without inconveniencing a user. The use of atomic operations also minimizes the peak value of TPM resources consumed by the JOIN phase.

The use of atomic operations introduces a need for consistency checks, to ensure that the same parameters are used in all atomic operations of the same JOIN process. DAA_tpmSpecific therefore contains a digest of the associated DAA_issuerSettings structure, and DAA_session contains a digest of associated DAA_tpmSpecific and DAA_joinSession structures. Each atomic operation verifies digests to ensure use of mutually consistent sets of DAA_issuerSettings, DAA_tpmSpecific, DAA_session, and DAA_joinSession data.

JOIN operations and data structures are designed to minimize the amount of data that must be stored on a TPM in between atomic operations, while ensuring use of mutually consistent sets of data. Digests of public data are held in the TPM between atomic operations, instead of the actual public data (if a digest is smaller than the actual data). In each atomic operation, consistency checks verify that any public data loaded and used in that operation matches the stored digest. Thus non-secret DAA_generic_X parameters (loaded into the TPM only when required), are checked using digests DAA_digest_X (preloaded into the TPM in the structure DAA_issuerSettings).

JOIN includes a challenge from the issuer, in order to defeat simple Denial of Service attacks on the issuer's server by rogues pretending to be arbitrary TPMs.

A first group of atomic operations generate all TPM-data that must be sent to the issuer. The platform performs other operations (that do not need to be trusted) using the TPM-data, and sends the resultant data to the issuer. The issuer sends values u2 and u3 back to the TPM. A second group of atomic operations accepts this data from the issuer and completes the protocol.

The TPM outputs encrypted forms of DAA_tpmSpecific, v0 and v1. These encrypted data are later interpreted by the same TPM and not by any other entity, so any manufacturer-specific wrapping can be used. It is suggested, however, that enc(DAA_tpmSpecific) or enc(v0) or enc(v1) data should be created by adapting a TPM_CONTEXT_BLOB structure.

After executing TPM_DAA_Join, it is prudent to perform TPM_DAA_Sign, to verify that the JOIN process completed correctly. A host platform may choose to verify JOIN by performing TPM_DAA_Sign as both the target and the verifier (or could, of course, use an external verifier).

End of informative comment

34.2 TPM_DAA_Sign

Start of informative comment

TPM_DAA_Sign responds to a challenge and proves the attestation held by a TPM without revealing the attestation held by that TPM. The operation is done in a series of atomic stages to minimize the contiguous time that a TPM is busy and hence unavailable for other commands. TPM_SaveContext can be used to save a DAA context in between atomic stages. This enables the response to the challenge to be done as a background activity without inconveniencing a user, and also minimizes the peak value of TPM resources consumed by the process.

--`,,```,,,,````-`-`,,`,,`,`,,`---

© ISO/IEC 2009 – All rights reserved
Copyright International Organization for Standardization
Provided by IHS under license with ISO
No reproduction or networking permitted without license from IHS
Not for Resale

The use of atomic operations introduces a need for consistency checks, to ensure that the same parameters are used in all atomic operations of the same SIGN process. DAA_tpmSpecific therefore contains a digest of the associated DAA_issuerSettings structure, and DAA_session contains a digest of associated DAA_tpmSpecific structure. Each atomic operation verifies these digests and hence ensures use of mutually consistent sets of DAA_issuerSettings, DAA_tpmSpecific, and DAA_session data.

SIGN operations and data structures are designed to minimize the amount of data that must be stored on a TPM in between atomic operations, while ensuring use of mutually consistent sets of data. Digests of public and private data are held in the TPM between atomic operations, instead of the actual public or private data (if a digest is smaller than the actual data). At each atomic operation, consistency checks verify that any data loaded and used in that operation matches the stored digest. Thus parameters DAA_digest_X are digests (preloaded into the TPM in the structure DAA_issuerSettings) of non-secret DAA_generic_X parameters (loaded into the TPM only when required), for example.

The design enables the use of any number of issuer DAA-data, private DAA-data, and so on. Strictly, the design is that the *TPM* puts no limit on the number of sets of issuer DAA-data or sets of private DAA-data, or restricts what set is in the TPM at any time, but supports only one DAA-context in the TPM at any instant. Any number of DAA-contexts can, of course, be swapped in and out of the TPM using TPM_SaveContext/TPM_LoadContext, so applications do not perceive a limit on the number of DAA contexts.

TPM_DAA_Sign accepts a freshness challenge from the verifier and generates all TPM-data that must be sent to the verifier. The platform performs other operations (that do not need to be trusted) using the TPM-data, and sends the resultant data to the verifier. At one stage, the TPM incorporates a loaded public (non-migratable) key into the protocol. This is intended to permit the setup of a session, for any specific purpose, including doing the same job in TPM_ActivateIdentity as the EK.

End of informative comment

34.3 DAA Command summary

Start of informative comment

The following is a conceptual summary of the operations that are necessary to setup a TPM for DAA, execute the JOIN process, and execute the SIGN process.

The summary is partitioned according to the “stages” of the actual TPM commands. Thus, the operations listed in JOIN under stage-2 briefly describe the operation of TPM_DAA_Join at stage-2, for example.

This summary is in place to help in the connection between the mathematical definition of DAA and this implementation in a TPM.

End of informative comment

34.3.1 TPM setup

1. A TPM generates a TPM-specific secret S (160-bit) from the RNG and stores S in nonvolatile store on the TPM. This value will never be disclosed and changed by the TPM.

--`,,```,,,,````-`-`,,`,,`,`,,`---

© ISO/IEC 2009 – All rights reserved

Copyright International Organization for Standardization
Provided by IHS under license with ISO
No reproduction or networking permitted without license from IHS
Not for Resale

34.3.2 JOIN

Start of informative comment

This entire section is informative

1. When the following is performed, this process does not increment the stage counter.

a. TPM imports a non-secret values n0 (2048-bit).

b. TPM computes a non-secret value N0 (160-bit) = H(n0).

c. TPM computes a TPM-specific secret DAA_rekey (160-bit) = H(S, H(n0)).

d. TPM stores a self-consistent set of (N0, DAA_rekey)

2. The following is performed 0 or several times: (Note: If the stage mechanism is being used, then this branch does not increment the stage counter.)

a. TPM imports

i. a self consistent set of (N0, DAA_rekey)

ii. a non-secret value DAA_SEED_KEY (2048-bit)

iii. a non-secret value DEPENDENT_SEED_KEY (2048-bit)

iv. a non-secret value SIG_DSK (2048-bit)

b. TPM computes DIGEST (160-bit) = H(DAA_SEED_KEY)

c. If DIGEST != N0, TPM refuses to continue

d. If DIGEST == N0, TPM verifies validity of signature SIG_DSK on DEPENDENT_SEED_KEY with key (DAA_SEED_KEY, e0 (= 2^16 + 1)) by using TPM_Sign_Verify (based on P1363). If check fails, TPM refuses to continue.

e. TPM sets N0 = H(DEPENDENT_SEED_KEY)

f. TPM stores a self consistent set of (N0, DAA_JOIN)

3. Stage 2

a. TPM imports a set of values, including

i. a non-secret value n0 (2048-bit),

ii. a non-secret value R0 (2048-bit),

iii. a non-secret value R1 (2048-bit),

iv. a non-secret value S0 (2048-bit),

v. a non-secret value S1 (2048-bit),

vi. a non-secret value n (2048-bit),

vii. a non-secret value n1 (1024-bit),

viii. a non-secret value gamma (2048-bit),

ix. a non-secret value q (208-bit),

x. a non-secret value COUNT (8-bit),

xi. a self consistent set of (N0, DAA_rekey).

xii. TPM saves them as part of a new set A.

b. TPM computes DIGEST (160-bit) = H(n0)

c. If DIGEST != N0, TPM refuses to continue.

© ISO/IEC 2009 – All rights reserved
Copyright International Organization for Standardization
Provided by IHS under license with ISO
No reproduction or networking permitted without license from IHS
Not for Resale

d. If DIGEST == N0, TPM computes DIGEST (160-bit) = H(R0, R1, S0, S1, n, n1, Γ, q)

e. TPM imports a non-secret value SIG_ISSUER_KEY (2048-bit).

f. TPM verifies validity of signature SIG_ISSUER_KEY (2048-bit) on DIGEST with key (n0, e0) by using TPM_Sign_Verify (based on P1363). If check fails, TPM refuses to continue.

g. TPM computes a TPM-specific secret f (208-bit) = H(DAA_rekey, COUNT, 0)||H(DAA_rekey, COUNT, 1) mod q.

h. TPM computes a TPM-specific secret f0 (104-bit) = f mod 2104.

i. TPM computes a TPM-specific secret f1 (104-bit) = f >> 104.

j. TPM save f, f0 and f1 as part of set A.

4. Stage 3

a. TPM generates a TPM-specific secret u0 (1024-bit) from the RNG.

b. TPM generates a TPM-specific secret u'1 (1104-bit) from the RNG.

c. TPM computes u1 (1024-bit) = u'1 mod n1.

d. TPM stores u0 and u1 as part of set A.

5. Stage 4

a. TPM computes a non-secret value P1 (2048-bit) = (R0^f0) mod n and stores P1 as part of set A.

6. Stage 5

a. TPM computes a non-secret value P2 (2048-bit) = P1*(R1^f1) mod n, stores P2 as part of set A and erases P1 from set A.

7. Stage 6

a. TPM computes a non-secret value P3 (2048-bit) = P2*(S0^u0) mod n, stores P3 as part of set A and erases P2 from set A.

8. Stage 7

a. TPM computes a non-secret value U (2048-bit) = P3*(S1^u1) mod n.

b. TPM erases P3 from set A

c. TPM computes and saves U1 (160-bit) = H(U||COUNT||N0) as part of set A.

d. TPM exports U.

9. Stage 8

a. TPM imports ENC_NE (2048-bit).

b. TPM decrypts NE (160-bit) from ENC_NE (2048-bit) by using privEK: NE = decrypt(privEK, ENC_NE).

c. TPM computes U2 (160-bit) = H(U1||NE).

d. TPM erases U1 from set A.

e. TPM exports U2.

10. Stage 9

a. TPM generates a TPM-specific secret r0 (344-bit) from the RNG.

b. TPM generates a TPM-specific secret r1 (344-bit) from the RNG.

c. TPM generates a TPM-specific secret r2 (1024-bit) from the RNG.

d. TPM generates a TPM-specific secret r3 (1264-bit) from the RNG.

© ISO/IEC 2009 – All rights reserved

Copyright International Organization for Standardization
Provided by IHS under license with ISO
No reproduction or networking permitted without license from IHS
Not for Resale

e. TPM stores r0, r1, r2, r3 as part of set A.

f. TPM computes a non-secret value P1 (2048-bit) = (R0^r0) mod n and stores P1 as part of set A.

11. Stage 10

a. TPM computes a non-secret value P2 (2048-bit) = P1*(R1^r1) mod n, stores P2 as part of set A and erases P1 from set A.

12. Stage 11

a. TPM computes a non-secret value P3 (2048-bit) = P2*(S0^r2) mod n, stores P3 as part of set A and erases P2 from set A.

13. Stage 12

a. TPM computes a non-secret value P4 (2048-bit) = P3*(S1^r3) mod n, stores P4 as part of set A and erases P3 from set A.

b. TPM exports P4.

14. Stage 13

a. TPM imports w (2048-bit).

b. TPM computes w1 = w^q mod Γ.

c. TPM verifies if w1 = 1 holds. If it doesn't hold, TPM refuses to continue.

d. If it does hold, TPM saves w as part of set A.

15. Stage 14

a. TPM computes a non-secret value E (2048-bit) = w^f mod Γ.

b. TPM exports E.

16. Stage 15

a. TPM computes a TPM-specific secret r (208-bit) = r0 + 2^104*r1 mod q.

b. TPM computes a non-secret value E1 (2048-bit) = w^r mod Γ.

c. TPM exports E1 and erases w from set A.

17. Stage 16

a. TPM imports a non-secret value c1 (160-bit).

b. TPM generates a non-secret value NT (160-bit) from the RNG.

c. TPM computes a non-secret value c (160-bit) = H(c1||NT).

d. TPM save c as part of set A.

e. TPM exports NT

18. Stage 17

a. TPM computes a non-secret value s0 (352-bit) = r0 + c*f0 over the integers.

b. TPM exports s0.

19. Stage 18

a. TPM computes a non-secret value s1 (352-bit) = r1 + c*f1 over the integers.

b. TPM exports s1.

20. Stage 19

a. TPM computes a non-secret value s2 (1024-bit) = r2 + c*u0 mod 21024.

© ISO/IEC 2009 – All rights reserved
Copyright International Organization for Standardization
Provided by IHS under license with ISO
No reproduction or networking permitted without license from IHS
Not for Resale

b. TPM exports s2.

21. Stage 20

a. TPM computes a non-secret value s'2 (1024-bit) = (r2 + c*u0) >> 1024 over the integers.

b. TPM saves s'2 as part of set A.

c. TPM exports c

22. Stage 21

a. TPM computes a non-secret value s3 (1272-bit) = r3 + cu1 + s'2 over the integers.

b. TPM exports s3 and erases s'2 from set A.

23. Stage 22

a. TPM imports a non-secret value u2 (1024-bit).

b. TPM computes a TPM-specific secret v0 (1024-bit) = u2 + u0 mod 21024.

c. TPM stores v0 as part of A.

d. TPM computes a TPM-specific secret v'0 (1024-bit) = (u2 + u0) >> 1024 over the integers.

e. TPM saves v'0 as part of set A.

24. Stage 23

a. TPM imports a non-secret value u3 (1512-bit).

b. TPM computes a TPM-specific secret v1 (1520-bit) = u3 + u1 + v'0 over the integers.

c. TPM stores v1 as part of A.

d. TPM erases v'0 from set A.

25. Stage 24

a. TPM makes self-consistent set of all the data (n0, COUNT, R0, R1, S0, S1, n, Γ, q, v0, v1), where the values v0, v1 are secret – they need to be stored safely with the consistent set, and the remaining is non-secret.

b. TPM erases set A.

End of informative comment

34.3.3 SIGN

Start of informative comment

This entire section is informative

1. Stage 0 & 1

a. TPM imports and verifies a self-consistent set of all the data including:

i. n0 (2048-bit),

ii. COUNT (8-bit),

iii. R0 (2048-bit),

iv. R1 (2048-bit),

v. S0 (2048-bit),

vi. S1 (2048-bit),

vii. n (2048-bit),

© ISO/IEC 2009 – All rights reserved

Copyright International Organization for Standardization
Provided by IHS under license with ISO
No reproduction or networking permitted without license from IHS
Not for Resale

viii. gamma (2048-bit),

ix. q (208-bit),

x. v0 (1024-bit),

xi. v1 (1520-bit).

xii. If the verification does not succeed, TPM refuses to continue.

b. TPM stores the above values as part of a new set A.

c. TPM computes a TPM-specific secret f0 (104-bit) = f mod 2104.

d. TPM computes a TPM-specific secret f1 (104-bit) = f >> 104.

e. TPM stores f0 and f1 as part of set A.

f. TPM generates a TPM-specific secret r0 (344-bit) from the RNG.

g. TPM generates a TPM-specific secret r1 (344-bit) from the RNG.

h. TPM generates a TPM-specific secret r2 (1024-bit) from the RNG.

i. TPM generates a TPM-specific secret r4 (1752-bit) from the RNG.

j. TPM stores r0, r1, r2, r4, as part of set A.

2. Stage 2

a. TPM computes a non-secret value P1 (2048-bit) = (R0^r0) mod n and stores P1 as part of set A.

3. Stage 3

a. TPM computes a non-secret value P2 (2048-bit) = P1*(R1^r1) mod n, stores P2 as part of set A and erases P1 from set A.

4. Stage 4

a. TPM computes a non-secret value P3 (2048-bit) = P2*(S0^r2) mod n, stores P3 as part of set A and erases P2 from set A.

5. Stage 5

a. TPM computes a non-secret value T (2048-bit) = P3*(S1^r4) mod n.

b. TPM erases P3 from set A.

c. TPM exports T.

6. Stage 6

a. TPM imports a non-secret value w (2048-bit).

b. TPM computes w1 = w^q mod Γ.

c. TPM verifies if w1 = 1 holds. If it doesn't hold, TPM refuses to continue.

d. If it does hold, TPM saves w as part of set A.

7. Stage 7

a. TPM computes a non-secret value E (2048-bit) = w^f mod Γ.

b. TPM exports E and erases f from set A.

8. Stage 8

a. TPM computes a TPM-specific secret r (208-bit) = r0 + 2^104*r1 mod q.

b. TPM computes a non-secret value E1 (2048-bit) = w^r mod Γ.

c. TPM exports E1 and erases w and E1 from set A.

© ISO/IEC 2009 – All rights reserved
Copyright International Organization for Standardization
Provided by IHS under license with ISO
No reproduction or networking permitted without license from IHS
Not for Resale

9. Stage 9
a. TPM imports a non-secret value c1 (160-bit).
b. TPM generates a non-secret value NT (160-bit) from the RNG.
c. TPM computes a non-secret value c2 (160-bit) = H(c1||NT) and erases c1 from set A.
d. TPM saves c2 as part of set A.
e. TPM exports NT.
10. Stage 10
a. TPM imports a non-secret value b (1-bit).
b. If b = = 1, TPM imports a non-secret value m (160-bit).
c. TPM computes a non-secret value c (160-bit) = H(c2||b||m) and erases c2 from set A.
d. If b = = 0, TPM imports an RSA public key, eAIK (= 2^16 + 1) and nAIK (2048-bit).
e. TPM computes a non-secret value c (160-bit) = H(c2||b||nAIK) and erases c2 from set A.
f. TPM exports c.
11. Stage 11
a. TPM computes a non-secret value s0 (352-bit) = r0 + c*f0 over the integers.
b. TPM exports s0.
12. Stage 12
a. TPM computes a non-secret value s1 (352-bit) = r1 + c*f1 over the integers.
b. TPM exports s1.
13. Stage 13
a. TPM computes a non-secret value s2 (1024-bit) = r2 + c*v0 mod 21024.
b. TPM exports s2.
14. Stage 14
a. TPM computes a non-secret value s'2 (1024-bit) = (r2 + c*v0) >> 1024 over the integers.
b. TPM saves s'2 as part of set A.
15. Stage 15
a. TPM computes a non-secret value s3 (1760-bit) = r4 + cv1 + s'2 over the integers.
b. TPM exports s3 and erases s'2 from set A.
c. TPM erases set A.

End of informative comment

© ISO/IEC 2009 – All rights reserved

Copyright International Organization for Standardization
Provided by IHS under license with ISO
No reproduction or networking permitted without license from IHS
Not for Resale

35. General Purpose IO

Start of informative comment

The GPIO capability allows an outside entity to output a signal on a GPIO pin, or read the status of a GPIO pin. The solution is for a single pin, with no timing information. There is no support for sending information on specific busses like SMBus or RS232. The design does support the designation of more than one GPIO pin.

There is no requirement as to the layout of the GPIO pin, or the routing of the wire from the GPIO pin on the platform. A platform specific specification can add those requirements.

To avoid the designation of additional command ordinals, the architecture uses the NV Storage commands. A set of GPIO NV indexes map to individual GPIO pins. TPM_NV_INDEX_GPIO_00 maps to the first GPIO pin. The platform specific specification indicates the mapping of GPIO zero to a specific package pin.

The TPM does not reserve any NV storage for the indicated pin; rather the TPM uses the authorization mechanisms for NV storage to allow a rich set of controls on the use of the GPIO pin. The TPM owner can specify when and how the platform can use the GPIO pin. While there is no NV storage for the pin value, TRUE or FALSE, there is NV storage for the authorization requirements for the pin.

Using the NV attributes the GPIO pin may be either an input pin or an output pin.

End of informative comment

1. The TPM MAY support the use of a GPIO pin defined by the NV storage mechanisms.
2. The GPIO pin MAY be either an input or an output pin.

© ISO/IEC 2009 – All rights reserved
Copyright International Organization for Standardization
Provided by IHS under license with ISO
No reproduction or networking permitted without license from IHS
Not for Resale

36. Redirection

Informative comment

Redirection allows the TPM to output the results of operations to hardware other than the normal TPM communication bus. The redirection can occur to areas internal or external to the TPM. Redirection is only available to key operations (such as TPM_UnBind, TPM_Unseal, and TPM_GetPubKey). To use redirection the key must be created specifying redirection as one of the keys attributes.

When redirecting the output the TPM will not interpret any of the data and will pass the data on without any modifications.

The TPM_SetRedirection command connects a destination location or port to a loaded key. This connection remains so long as the key is loaded, and is saved along with other key information on a saveContext(key), loadContext(key). If the key is reloaded using TPM_LoadKey, then TPM_SetRedirection must be run again.

Any use of TPM_SetRedirection with a key that does not have the redirect attribute must return an error. Use of key that has the redirect attribute without TPM_SetRedirection being set must return an error.

End of informative comments

1. The TPM MAY support redirection
2. If supported, the TPM MUST only use redirection on keys that have the redirect attribute set
3. A key that is tagged as a “redirect” key MUST be a leaf key in the TPM Protected Storage blob hierarchy. A key that is tagged as a “redirect” key CAN NEVER be a parent key.
4. Output data that is the result of a cryptographic operation using the private portion of a “redirect” key:
    a. MUST be passed to an alternate output channel
    b. MUST NOT be passed to the normal output channel
    c. MUST NOT be interpreted by the TPM
5. When command input or output is redirected the TPM MUST respond to the command as soon as the ordinal finishes processing
    a. The TPM MUST indicate to any subsequent commands that the TPM is busy and unable to accept additional command until the redirection is complete
    b. The TPM MUST allow for the resetting of the redirection channel
6. Redirection MUST be available for the following commands:
    a. TPM_Unseal
    b. TPM_UnBind
    c. TPM_GetPubKey
    d. TPM_Seal
    e. TPM_Quote

© ISO/IEC 2009 All rights reserved

Copyright International Organization for Standardization
Provided by IHS under license with ISO
No reproduction or networking permitted without license from IHS
Not for Resale

37. Structure Versioning

Start of informative comment

In version 1.1 some structures also contained a version indicator. The TPM set the indicator to indicate the version of the TPM that was creating the structure. This was incorrect behavior. The functionality of determining the version of a structure is radically different in 1.2.

Most structures will contain a TPM_STRUCTURE_TAG. All future structures must contain the tag, the only structures that do not contain the tag are 1.1 structures that are not modified in 1.2. This restriction keeps backwards compatibility with 1.1.

Any 1.2 structure must not contain a 1.1 tagged structure. For instance the TPM_KEY complex, if set at 1.2, must not contain a PCR_INFO structure. The TPM_KEY 1.2 structure must contain a PCR_INFO_LONG structure. The converse is also true 1.1 structures must not contain any 1.2 structures.

The TPM must not allow the creation of any mixed structures. This implies that a command that deals with keys, for instance, must ensure that a complete 1.1 or 1.2 structure is properly built and validated on the creation and use of the key.

The tag structure is set as a UINT16. This allows for a reasonable number of structures without wasting space in the buffers.

To obtain the current TPM version the caller must use the TPM_GetCapability command.

The tag is not a complete validation of the validity of a structure. The tag provides a reference for the structure and the TPM or caller is responsible for determining the validity of any remaining fields. For instance, in the TPM_KEY structure, the tag would indicate TPM_KEY but the TPM would still use tpmProof and the various digests to ensure the structure integrity.

7. Compatibility and notification

In 1.1 TPM_CAP_VERSION (index 19) returned a version structure with 1.1.x.x. The x.x was for manufacturer information and the x.x also was set version structures. In 1.2 TPM_CAP_VERSION will return 1.1.0.0. Any 1.2 structure that uses the version information will set the x.x to 0.0 in the structure. TPM_CAP_MANUFACTURER_VER (index 21) will return 1.2.x.x. The 1.2 structures do not contain the version structure. The rationale behind this is that the structure tag will indicate the version of the structure. So changing a correct structure will result in a new tag and there is no need for a separate version structure.

For further compatibility, the quote function always returns 1.1.0.0 in the version information regardless of the size of the incoming structure. All other functions may regard a 2 byte sizeofselect structure as indicative of a 1.1 structure. The TPM handles all of the structures according to the input, the only exception being TPM_CertifyKey where the TPM does not need to keep the input version of the structure.

End of informative comment

1. The TPM MUST support 1.1 and 1.2 defined structures
2. The TPM MUST ensure that 1.1 and 1.2 structures are not mixed in the same overall structure
    a. For instance in the TPM_KEY structure if the structure is 1.1 then PCR_INFO MUST be set and if 1.2 the PCR_INFO_LONG structure must be set
3. On input the TPM MUST ignore the lower two bytes of the version structure
4. On output the TPM MUST set the lower two bytes to 0 of the version structure

--`,,```,,,,````-`-`,,`,,`,`,,`---
© ISO/IEC 2009 – All rights reserved
Copyright International Organization for Standardization
Provided by IHS under license with ISO
No reproduction or networking permitted without license from IHS
Not for Resale

38. Certified Migration Key Type

Start of informative comment

In version 1.1 there were two key types, non-migration and migration keys. The TPM would only certify non-migrating keys. There is a need for a key that allows migration but allows for certification. This proposal is to create a key that allows for migration but still has properties that the TPM can certify.

These new keys are “certifiable migratable keys” or CMK. This designation is to separate the keys from either the normal migration or non-migration types of keys. The TPM Owner is not required to use these keys.

Two entities may participate in the CMK process. The first is the Migration-Selection Authority and the second is the Migration Authority (MA).

Migration Selection Authority (MSA)

The MSA controls the migration of the key but does not handle the migrated itself.

Migration Authority (MA)

A Migration Authority actually handles the migrated key.

Use of MSA and MA

Migration of a CMK occurs using TPM_CMK_CreateBlob (TPM_CreateMigrationBlob cannot be used). The TPM Owner authorizes the migration destination (as usual), and the key owner authorizes the migration transformation (as usual). An MSA authorizes the migration destination as well. If the MSA is the migration destination, no MSA authorization is required.

End of informative comment

38.1 Certified Migration Requirements

Start of informative comment

The following list details the design requirements for the controlled migration keys

Key Protections

The key must be protected by hardware and an entity trusted by the key user.

Key Certification

The TPM must provide a mechanism to provide certification of the key protections (both hardware and trusted entity)

Owner Control

The TPM Owner must control the selection of the trusted entity

Control Delegation

The TPM Owner may delegate the ability to create the keys but the decision must be explicit

Linkage

The architecture must not require linking the trusted entity and the key user

Key Type

The key may be any type of migratable key (storage or signing)

Interaction

There must be no required interaction between the trusted entity and the TPM during the key creation process

End of informative comment

--`,,```,,,,````-`-`,,`,,`,`,,`---

© ISO/IEC 2009 – All rights reserved

Copyright International Organization for Standardization
Provided by IHS under license with ISO
No reproduction or networking permitted without license from IHS
Not for Resale

38.2 Key Creation

Start of informative comment

The command TPM_CMK_CreateKey creates a CMK where control of the migration is by a MSA or MA. The process uses the MSA public key (actually a digest of the MA public key) as input to TPM_CMK_CreateKey. The key creation process establishes a migrationAuth that is SHA-1(tpmProof || SHA-1(MA pubkey) || SHA-1(source pubkey)).

The use of tpmProof is essential to prove that CMK creation occurs on a TPM. The use of "source pubkey" explicitly links a migration AuthData value to a particular public key, to simplify verification that a specific key is being migrated.

End of informative comment

38.3 Migrate CMK to a MA

Start of informative comment

Migration of a CMK to a destination other than the MSA:

TPM_MIGRATIONKEYAUTH Creation

The TPM Owner authorizes the creation of a TPM_MIGRATIONKEYAUTH structure using TPM_AuthorizeMigrationKey command. The structure contains the destination migrationKey, the migrationScheme (which must be set to TPM_MS_RESTRICT_MIGRATE or TPM_MS_RESTRICT_APPROVE) and a digest of tpmProof.

MA Approval

The MA signs a TPM_CMK_AUTH structure, which contains the digest of the MA public key, the digest of the destination (or parent) public key and a digest of the public portion of the key to be migrated

TPM Owner Authorization

The TPM Owner authorizes the MA approval using TPM_CMK_CreateTicket and produces a signature ticket

Key Owner Authorization

The CMK owner passes the TPM Owner MA authorization, the MSA Approval and the signature ticket to the TPM_CMK_CreateBlob using the key owners authorization.

Thus the TPM owner, the key's owner, and the MSA, all cooperate to migrate a key produced by TPM_CMK_CreateBlob.

End of informative comment

38.4 Migrate CMK to a MSA

Start of informative comment

Migrate CMK directly to a MSA

TPM_MIGRATIONKEYAUTH Creation

The TPM Owner authorizes the creation of a TPM_MIGRATIONKEYAUTH structure using TPM_AuthorizeMigrationKey command. The structure contains the destination migrationKey (which must be the MSA public key), the migrationScheme (which must be set to TPM_MS_RESTRICT_MIGRATE) and a digest of tpmProof.

© ISO/IEC 2009 – All rights reserved
Copyright International Organization for Standardization
Provided by IHS under license with ISO
No reproduction or networking permitted without license from IHS
Not for Resale

Key Owner Authorization

The CMK owner passes the TPM_MIGRATIONKEYAUTH to the TPM in a TPM_CMK_CreateBlob using the CMK owner authorization.

Double Wrap

If specified, through the MS_MIGRATE scheme, the TPM double wraps the CMK information such that the only way a recipient can unwrap the key is with the cooperation of the CMK owner.

Proof of Control

To prove to the MA and to a third party that migration of a key is under MSA control, a caller passes the MA's public key (actually its digest) to TPM_CertifyKey, to create a TPM_CERTIFY_INFO structure. This now contains a digest of the MA's public key.

A CMK be produced without cooperation from the MA; the caller merely provides the MSA's public key. When the restricted key is to be migrated, the public key of the intended destination, plus the CERTIFY_INFO structure, are sent to the MSA. The MSA extracts the migrationAuthority digest from the CERTIFY_INFO structure, verifies that migrationAuthority corresponds to the MSA's public key, creates and signs a TPM_RESTRICTEDKEYAUTH structure, and sends that signature back to the caller. Thus the MSA never needs to touch the actual migrated data.

End of informative comment

© ISO/IEC 2009 – All rights reserved

Copyright International Organization for Standardization
Provided by IHS under license with ISO
No reproduction or networking permitted without license from IHS
Not for Resale

39. Revoke Trust

Start of informative comment

There are circumstances where clearing all keys and values within the TPM is either desirable or necessary. These circumstances may involve both security and privacy concerns.

Platform trust is demonstrated using the EK Credential, Platform Credential and the Conformance Credentials. There is a direct and cryptograph relationship between the EK and the EK Credential and the Platform Credential. The EK and Platform credentials can only demonstrate platform trust when they can be validated by the Endorsement Key.

This command is called revoke trust because by deleting the EK, the EK Credential and the Platform Credential are dissociated from platform therefore invalidating them resulting in the revocation of the trust in the platform. From a trust perspective, the platform associated with these specific credentials no longer exists. However, any transaction that occurred prior to invoking this command will remain valid and trusted to the same extent they would be valid and trusted if the platform were physically destroyed.

This is a non-reversible function. Also, along with the EK, the Owner is also deleted removing all non-migratable keys and owner-specified state.

It is possible to establish new trust in the platform by creating a new EK using the TPM_CreateRevocableEK command. (It is not possible to create an EK using the TPM_CreateEndorsementKeyPair because that command is not allowed if the revoke trust command is allowed.) Establishing trust in the platform, however, is more than just creating the EK. The EK Credential and the Platform Credential must also be created and associated with the new EK as described above. (The conformance credentials may be obtained from the TPM and Platform manufacturer.) These credentials must be created by an entity that is trusted by those entities interested in the trust of the platform. This may not be a trivial task. For example, an entity willing to create these credentials my want to examine the platform and require physical access during the new EK generation process.

Besides calling one of the two EK creation functions to create the EK, the EK may be "squirted" into the TPM by an external source. If this method is used, tight controls must be placed on the process used to perform this function to prevent exposure or intentional duplication of the EK. Since the revocation and re-creation of the EK are functions intended to be performed after the TPM leaves the trusted manufacturing process, squiring of the EK must be disallowed if the revoke trust command is executed.

End of informative comment

1. The TPM MUST not allow both the TPM_CreateRevocableEK and the TPM_CreateEndorsementKeyPair functions to be operational.
2. After an EK is created the TPM MUST NOT allow a new EK to be "squirted" for the lifetime of the TPM.
3. The EK Credential MUST provide an indication within the EK Credential as to how the EK was created. The valid permutations are:
   a. Squirted, non-revocable
   b. Squirted, revocable
   c. Internally generated, non-revocable
   d. Internally generated, revocable
4. If the method for creating the EK during manufacturing is squiring the EK may be either non-revocable or revocable. If it is revocable, the method must provide the insertion or extraction of the EKreset value.

© ISO/IEC 2009 – All rights reserved
Copyright International Organization for Standardization
Provided by IHS under license with ISO
No reproduction or networking permitted without license from IHS
Not for Resale

40. Mandatory and Optional Functional Blocks

Start of informative comment

This section lists the main functional blocks of a TPM (in arbitrary order), states whether that block is mandatory or optional in the main TPM specification, and provides brief justification for that choice.

Important notes:

1. The default classification of a TPM function block is “mandatory”, since reclassification from mandatory to optional enables the removal of a function from existing implementations, while reclassification from optional to mandatory may require the addition of functionality to existing implementations.

2. Mandatory functions will be reclassified as optional functions if those functions are not required in some particular type of TCG trusted platform.

3. If a functional block is mandatory in ISO/IEC 11889, the functionality must be present in all TCG trusted platforms.

4. If a functional block is optional in ISO/IEC 11889, each individual platform-specific specification must declare the status of that functionality as either (1) “mandatory-specific” (the functionality must be present in all platforms of that type), or (2) “optional-specific” (the functionality is optional in that type of platform), or (3) “excluded-specific” (the functionality must not be present in that type of platform).

End of informative comment

Classification of TPM functional blocks

1. Legacy (v1.1b) features
    a. Anything that was mandatory in v1.1b continues to be mandatory in v1.2. Anything that was optional in v1.1b continues to be optional in v1.2.
    b. V1.2 must be backwards compatible with v1.1b. All TPM features in v1.1b were discussed in depth when v1.1b was written, and anything that wasn't thought strictly necessary was tagged as "optional".
2. Number of PCRs
    a. The platform specific specification controls the number of PCR on a platform. The TPM MUST implement the mandatory number of PCR specified for a particular platform
        i. TPMs designed to work on multiple platforms MUST provide the appropriate number of TPM for all intended platforms. I.e. if one platform requires 16 PCR and the other platform 24 the TPM would have to supply 24 PCR.
    b. For TPMs providing backwards compatibility with 1.1 TPM on the PC platform, there MUST be 16 static PCR.
3. Sessions
    a. The TPM MUST support a minimum of 3 active sessions
        i. Active means currently loaded and addressable inside the TPM
        ii. Without 3 active sessions many TPM commands cannot function
    b. The TPM MUST support a minimum of 16 concurrent sessions
        i. The contextList of currently available session has a minimum size of 16
        ii. Providing for more concurrent sessions allows the resource manager additional flexibility and speed

© ISO/IEC 2009 All rights reserved

Copyright International Organization for Standardization
Provided by IHS under license with ISO
No reproduction or networking permitted without license from IHS
Not for Resale

4. NVRAM
    a. There are 20 bytes mandatory of NVRAM in v1.2 as specified by ISO/IEC 11889. A platform specific specification can require a larger amount of NVRAM
    b. Cost is important. The mandatory amount of NVRAM must be as small as possible, because different platforms will require different amounts of NVRAM. 20 bytes are required for (DIR) backwards compatibility with v1.1b.
5. New key types
    a. The new signing keys are mandatory in v1.2 because they plug a security hole.
6. Direct Anonymous Attestation
    a. This is optional in v1.2
    b. Cost is important. The DAA function consumes more TPM resources than any other TPM function, but some platform specific specifications (some servers, for example) may have no need for the anonymity and pseudonymity provided by DAA.
7. Transport sessions
    a. These are mandatory in v1.2.
    b. Transport sessions
        i. Enable protection of data submitted to a TPM and produced by a TPM
        ii. Enable proof of the TPM commands executed during an arbitrary session.
8. Resettable Endorsement Key
    a. This is optional in v1.2
    b. Cost is important. Resettable EKs are valuable in some markets segments, but cause more complexity than non-resettable EKs, which are expected to be the dominant type of EK
9. Monotonic Counter
    a. This is mandatory in v1.2
    b. A monotonic counter is essential to enable software to defeat certain types of attack, by enabling it to determine the version (revision) of dynamic data.
10. Time Ticks
    a. This is mandatory in v1.2
    b. Time stamping is a function that is potentially beneficial to both a user and system software.
11. Delegation (includes DSAP)
    a. This is mandatory in v1.2
    b. Delegation enables the well-established principle of least privilege to be applied to Owner authorized commands.
12. GPIO
    a. This is optional in v1.2
    b. Cost is important. Not all types of platform will require a secure intra-platform method of key distribution

© ISO/IEC 2009 – All rights reserved
Copyright International Organization for Standardization
Provided by IHS under license with ISO
No reproduction or networking permitted without license from IHS
Not for Resale

13. Locality
    a. The use of locality is optional in v1.2
    b. The structures that define locality are mandatory
    c. Locality is an essential part of many (new) TPM commands, but the definition of locality varies widely from platform to platform, and may not be required by some types of platforms.
    d. It is mandatory that a platform specific specification indicate the definitions of locality on the platform. It is perfectly reasonable to only define one locality and ignore all other uses of locality on a platform
14. TPM-audit
    a. This is optional in v1.2
    b. Proper TPM-audit requires support to reliably store logs and control access to the TPM, and any mechanism (an OS, for example) that could provide such support is potentially capable of providing an audit log without using TPM-audit. Nevertheless, TPM-audit might be useful to verify operation of any and all software, including an OS. TPM-audit is believed to be of no practical use in a client, but might be valuable in a server, for example.
15. Certified Migration
    a. This is optional in v1.2
    b. Cost is important. Certified Migration enables a business model that may be nonsense for some platforms.

--`,,```,,,,````-`-`,,`,,`,`,,`---
© ISO/IEC 2009 – All rights reserved

Copyright International Organization for Standardization
Provided by IHS under license with ISO
No reproduction or networking permitted without license from IHS
Not for Resale

41. 1.1a and 1.2 Differences

Start of informative comment

All 1.2 TPM commands are completely compliant with 1.1b commands with the following known exceptions.

1. TSC_PhysicalPresence does not support configuration and usage in a single step.

2. TPM_GetPubKey is unable to read the SRK unless TPM_PERMANENT_FLAGS -> readSRKPub is TRUE

3. TPM_SetTempDeactivated now requires either physical presence or TPM Operator authorization to execute

4. TPM_OwnerClear does not modify TPM_PERMANENT_DATA -> authDIR[0].

End of informative comment

© ISO/IEC 2009 – All rights reserved
Copyright International Organization for Standardization
Provided by IHS under license with ISO
No reproduction or networking permitted without license from IHS
Not for Resale

42. Bibliography

TPM Protection Profile, BSI-PP-0030-2008 : PC Client Specific Trusted Platform Module Family 1.2; Level 2 Version 1.1 (PDF) online at http://www.bsi.de/cc/pplist/pplist.htm

FIPS-140-2, Federal Information Processing Standard 140-2

ISO/IEC 19790, Information technology — Security techniques — Security requirements for cryptographic modules

© ISO/IEC 2009 All rights reserved
Copyright International Organization for Standardization
Provided by IHS under license with ISO
No reproduction or networking permitted without license from IHS
Not for Resale

ICS 35.040

Price based on 143 pages

© ISO/IEC 2009 – All rights reserved
Copyright International Organization for Standardization
Provided by IHS under license with ISO
No reproduction or networking permitted without license from IHS
Not for Resale