INTERNATIONAL STANDARD

ISO/IEC 11801

Second edition
2002-09

Information technology – Generic cabling for customer premises



Reference number
ISO/IEC 11801:2002(E)

Copyright International Organization for Standardization
Provided by IHS under license with ISO
No reproduction or networking permitted without license from IHS

Not for Resale

Copyright International Organization for Standardization
Provided by IHS under license with ISO
No reproduction or networking permitted without license from IHS
Not for Resale

INTERNATIONAL STANDARD

ISO/IEC 11801

Second edition
2002-09

Information technology – Generic cabling for customer premises

© ISO/IEC 2002

All rights reserved. Unless otherwise specified, no part of this publication may be reproduced or utilized in any form or by any means, electronic or mechanical, including photocopying and microfilm, without permission in writing from the publisher.

ISO/IEC Copyright Office • Case postale 56 • CH-1211 Genève 20 • Switzerland



PRICE CODE XB

For price, see current catalogue

Copyright International Organization for Standardization
Provided by IHS under license with ISO
No reproduction or networking permitted without license from IHS

Not for Resale

CONTENTS

FOREWORD 10
INTRODUCTION 11
1 Scope 13
2 Normative references 13
3 Definitions, abbreviations and symbols 17
3.1 Definitions 17
3.2 Abbreviations 23
3.3 Symbols 24
3.3.1 Variables 24
3.3.2 Indices 25
4 Conformance 25
5 Structure of the generic cabling system 26
5.1 General 26
5.2 Functional elements 26
5.3 Cabling subsystems 27
5.3.1 General 27
5.3.2 Campus backbone cabling subsystem 27
5.3.3 Building backbone cabling subsystem 28
5.3.4 Horizontal cabling subsystem 28
5.3.5 Design objectives 28
5.4 Interconnection of subsystems 29
5.4.1 General 29
5.4.2 Centralised cabling architecture 30
5.5 Accommodation of functional elements 30
5.6 Interfaces 30
5.6.1 Equipment interfaces and test interfaces 30
5.6.2 Channel and permanent link 32
5.6.3 External network interface 32
5.7 Dimensioning and configuring 32
5.7.1 Distributors 32
5.7.2 Cables 34
5.7.3 Work area cords and equipment cords 34
5.7.4 Patch cords and jumpers 34
5.7.5 Telecommunications outlet (TO) 35
5.7.6 Consolidation point 36
5.7.7 Telecommunications rooms and equipment rooms 36
5.7.8 Building entrance facilities 36
5.7.9 External services cabling 36
6 Performance of balanced cabling 37
6.1 General 37
6.2 Layout 38
6.3 Classification of balanced cabling 39
6.4 Balanced cabling performance 39
6.4.1 General 39

Copyright International Organization for Standardization
Provided by IHS under license with ISO
No reproduction or networking permitted without license from IHS Not for Resale

6.4.2 Return loss 39
6.4.3 Insertion loss/attenuation 40
6.4.4 NEXT 41
6.4.5 Attenuation to crosstalk ratio (ACR) 44
6.4.6 ELFEXT 45
6.4.7 Direct current (d.c.) loop resistance 47
6.4.8 Direct current (d.c.) resistance unbalance 48
6.4.9 Current carrying capacity 48
6.4.10 Operating voltage 48
6.4.11 Power capacity 48
6.4.12 Propagation delay 48
6.4.13 Delay skew 49
6.4.14 Unbalance attenuation 49
6.4.15 Coupling attenuation 50
7 Reference implementations for balanced cabling 50
7.1 General 50
7.2 Balanced cabling 50
7.2.1 General 50
7.2.2 Horizontal cabling 50
7.2.3 Backbone cabling 54
8 Performance of optical fibre cabling 55
8.1 General 55
8.2 Component choice 55
8.3 Channel attenuation 56
8.4 Channel topology 56
8.5 Propagation delay 58
9 Cable requirements 58
9.1 General 58
9.2 Balanced cables 58
9.2.1 Basic performance requirements 58
9.2.2 Additional requirements 59
9.2.3 Additional performance requirements for flexible cables 60
9.3 Additional crosstalk considerations for cable sharing in balanced cables 60
9.3.1 General 60
9.3.2 Power summation in backbone cables 60
9.3.3 Hybrid, multi-unit and cables connected to more than one TO 60
9.4 Optical fibre cables 61
9.4.1 Optical fibre types 61
9.4.2 Generic performance requirements 61
9.4.3 Multimode optical fibre cable 61
9.4.4 Single-mode optical fibre cables 62
10 Connecting hardware requirements 62
10.1 General requirements 62
10.1.1 Applicability 62
10.1.2 Location 63
10.1.3 Design 63
10.1.4 Operating environment 63
10.1.5 Mounting 63

Copyright International Organization for Standardization
Provided by IHS under license with ISO
No reproduction or networking permitted without license from IHS Not for Resale

10.1.6 Installation practices 63
10.1.7 Marking and colour coding 64
10.2 Connecting hardware for balanced cabling 64
10.2.1 General requirements 64
10.2.2 Performance marking 64
10.2.3 Mechanical characteristics 64
10.2.4 Electrical characteristics 66
10.2.5 Telecommunications outlet requirements 72
10.2.6 Design considerations for installation 73
10.3 Optical fibre connecting hardware 74
10.3.1 General requirements 74
10.3.2 Marking and colour coding 74
10.3.3 Mechanical and optical characteristics 74
10.3.4 Telecommunications outlet requirements 75
10.3.5 Connection schemes for optical fibre cabling 75
11 Screening practices 77
11.1 General 77
11.2 Electromagnetic performance 77
11.3 Earthing 78
12 Administration 78
13 Balanced cords 78
13.1 Introduction 78
13.2 Insertion loss 78
13.3 Return loss 79
13.4 NEXT 79
Annex A (normative) Balanced permanent link and CP link performance 82
A.1 General 82
A.2 Performance 82
A.2.1 General 82
A.2.2 Return loss 83
A.2.3 Insertion loss/attenuation 84
A.2.4 NEXT 85
A.2.5 Attenuation to crosstalk ratio (ACR) 88
A.2.6 ELFEXT 89
A.2.7 Direct current (d.c.) loop resistance 92
A.2.8 Direct current (d.c.) resistance unbalance 93
A.2.9 Propagation delay 93
A.2.10 Delay skew 94
Annex B (normative) Test procedures 96
B.1 General 96
B.2 Channel and link performance testing 96
B.2.1 Testing balanced cabling channels, permanent links and CP links 96
B.2.2 Testing optical fibre cabling channels 96
B.2.3 Channel and link test schedules 96
B.3 Transmission testing of cords for balanced cabling 97
B.4 Transmission testing of components for cabling 98
B.4.1 Transmission testing of copper cables for balanced cabling 98

Copyright International Organization for Standardization
Provided by IHS under license with ISO
No reproduction or networking permitted without license from IHS Not for Resale

B.4.2 Transmission testing of connecting hardware for balanced cabling 98
B.4.3 Transmission testing of cables for optical cabling.....98
B.4.4 Transmission testing of connectors for optical cabling.....98
Annex C (normative) Mechanical and environmental performance testing of connecting hardware for balanced cabling 99
C.1 Introduction.....99
C.2 Test requirements.....99
C.2.1 General.....99
C.2.2 Initial test measurements 99
C.2.3 Environmental and mechanical performance 100
Annex D (informative) Electromagnetic characteristics 104
Annex E (informative) Acronyms for balanced cables 105
Annex F (informative) Supported applications 107
F.1 Supported applications for balanced cabling 107
F.2 Supported applications for optical fibre cabling 109
Annex G (informative) Channel and permanent link models for balanced cabling 113
G.1 General 113
G.2 Insertion loss 113
G.2.1 Insertion loss of the channel configuration 113
G.2.2 Insertion loss of the permanent link configurations.....114
G.2.3 Assumptions for insertion loss 114
G.3 NEXT.....115
G.3.1 NEXT of the channel configuration.....115
G.3.2 NEXT of the permanent link configurations 115
G.3.3 Assumptions for NEXT 116
G.4 ELFEXT.....119
G.4.1 ELFEXT of the channel configuration 119
G.4.2 ELFEXT for the permanent link configurations 119
G.4.3 Assumptions for ELFEXT 120
G.5 Return loss 120
G.5.1 Return loss of the channel and permanent link configurations 120
G.5.2 Assumptions for the return loss circuit analysis method 121
Annex H (informative) Class F channel and permanent link with two connections.....124
Annex I (informative) Significant changes to balanced cabling requirements with respect to earlier editions of this International Standard.....125
I.1 General 125
I.2 References 125
I.3 Structural elements.....125
I.4 Product designation 125
I.5 Component requirements.....125
I.6 Installed cabling requirements 126
Bibliography.....132

--`,,```,,,,````-`-`,,`,,`,`,,`---

Copyright International Organization for Standardization
Provided by IHS under license with ISO
No reproduction or networking permitted without license from IHS Not for Resale

Figure 1 – Structure of generic cabling 27
Figure 2 – Hierarchical structure of generic cabling 29
Figure 3 – Structures for centralised generic cabling 29
Figure 4 – Accommodation of functional elements 30
Figure 5 – Interconnect models 31
Figure 6 – Cross-connect models 31
Figure 7 – Equipment and test interfaces 31
Figure 8 – Example of a generic cabling system with combined BD and FD 33
Figure 9 – Inter-relationship of functional elements in an installation with redundancy 34
Figure 10 – Channel, permanent link and CP link of a balanced cabling 37
Figure 11 – Example of a system showing the location of cabling interfaces and extent of associated channels 38
Figure 12 – Horizontal cabling models 52
Figure 13 – Backbone cabling model 54
Figure 14 – Combined backbone/horizontal channels 57
Figure 15 – Eight-position outlet pin and pair grouping assignments (front view of connector) 73
Figure 16 – Duplex SC connectivity configuration 76
Figure 17 – Optical fibre patch cord 77
Figure A.1 – Link options 82
Figure E.1 – Cable naming schema 105
Figure E.2 – Cable types 106
Figure G.1 – Example of computation of NEXT with higher precision 116
Figure H.1 – Two connection channel and permanent link 124
Figure I.1 – Horizontal cabling model 127
Figure I.2 – Backbone cabling model 127

Copyright International Organization for Standardization
Provided by IHS under license with ISO
No reproduction or networking permitted without license from IHS Not for Resale

Table 1 – Maximum channel lengths 32
Table 2 – Return loss for channel.....40
Table 3 – Informative return loss values for channel at key frequencies 40
Table 4 – Insertion loss for channel.....41
Table 5 – Informative insertion loss values for channel at key frequencies 41
Table 6 – NEXT for channel 42
Table 7 – Informative NEXT values for channel at key frequencies.....42
Table 8 – PS NEXT for channel.....43
Table 9 – Informative PS NEXT values for channel at key frequencies 43
Table 10 – Informative ACR values for channel at key frequencies.....44
Table 11 – Informative PS ACR values for channel at key frequencies 45
Table 12 – ELFEXT for channel.....46
Table 13 – Informative ELFEXT values for channel at key frequencies.....46
Table 14 – PS ELFEXT for channel 47
Table 15 – Informative PS ELFEXT values for channel at key frequencies 47
Table 16 – Direct current (d.c.) loop resistance for channel.....47
Table 17 – Propagation delay for channel 48
Table 18 – Informative propagation delay values for channel at key frequencies 49
Table 19 – Delay skew for channel.....49
Table 20 – Unbalance attenuation for channel.....50
Table 21 – Horizontal link length equations 53
Table 22 – Backbone link length equations 55
Table 23 – Channel attenuation.....56
Table 24 – Basic requirements of balanced cables 58
Table 25 – Mechanical characteristics of balanced cables.....59
Table 26 – Optical fibre cable attenuation 61
Table 27 – Multimode optical fibre modal bandwidth.....62
Table 28 – Mechanical characteristics of connecting hardware for use with balanced cabling 65
Table 29 – Electrical characteristics of telecommunications outlets intended for use with balanced cabling 67
Table 30 – Return loss 68
Table 31 – Insertion loss 68
Table 32 – Near end crosstalk (NEXT) 68
Table 33 – Power sum near end crosstalk (PS NEXT) 69
Table 34 – Far end crosstalk (FEXT).....69
Table 35 – Power sum far end crosstalk (PS FEXT 70
Table 36 – Input to output resistance 70
Table 37 – Input to output resistance unbalance 70
Table 38 – Current carrying capacity.....71
Table 39 – Propagation delay.....71
Table 40 – Delay skew 71

--`,,```,,,,````-`-`,,`,,`,`,,`---
Copyright International Organization for Standardization
Provided by IHS under license with ISO
No reproduction or networking permitted without license from IHS
Not for Resale

Table 41 – Transverse conversion loss (TCL) f.f.s. 71
Table 42 – Transfer impedance (screened connectors only) 72
Table 43 – Insulation resistance 72
Table 44 – Voltage proof 72
Table 45 – Matrix of backward compatible mated modular connector performance 73
Table 46 – Mechanical and optical characteristics of optical fibre connecting hardware 75
Table 47 – Minimum return loss for balanced cords 79
Table 48 – Informative values of return loss at key frequencies for Category 5, 6 and 7 cords 79
Table 49 – Informative values of NEXT at key frequencies for Category 5, 6 and 7 cords 81
Table A.1 – Return loss for permanent link or CP link 83
Table A.2 – Informative return loss values for permanent link with maximum implementation at key frequencies 83
Table A.3 – Insertion loss for permanent link or CP link 84
Table A.4 – Informative insertion loss values for permanent link with maximum implementation at key frequencies 85
Table A.5 – NEXT for permanent link or CP link 86
Table A.6 – Informative NEXT values for permanent link with maximum implementation at key frequencies 86
Table A.7 – PS NEXT for permanent link or CP link 87
Table A.8 – Informative PS NEXT values for permanent link with maximum implementation at key frequencies 88
Table A.9 – Informative ACR values for permanent link with maximum implementation at key frequencies 89
Table A.10 – Informative PS ACR values for permanent link with maximum implementation at key frequencies 89
Table A.11 – ELFEXT for permanent link or CP link 90
Table A.12 – Informative ELFEXT values for permanent link with maximum implementation at key frequencies 91
Table A.13 – PS ELFEXT for permanent link or CP link 92
Table A.14 – Informative PS ELFEXT values for permanent link with maximum implementation at key frequencies 92
Table A.15 – Direct current (d.c.) loop resistance for permanent link or CP link 93
Table A.16 – Informative d.c. loop resistance for permanent link with maximum implementation 93
Table A.17 – Propagation delay for permanent link or CP link 94
Table A.18 – Informative propagation delay values for permanent link with maximum implementation at key frequencies 94
Table A.19 – Delay skew for permanent link or CP link 95
Table A.20 – Informative delay skew for permanent link with maximum implementation 95
Table B.1 – Cabling characteristics of copper and optical fibre cabling for acceptance, compliance and reference testing 97
Table C.1 – Group P 100
Table C.2 – Group A 101
Table C.3 – Group B 102
Table C.4 – Group C 103

Copyright International Organization for Standardization
Provided by IHS under license with ISO
No reproduction or networking permitted without license from IHS Not for Resale

Table C.5 – Group D 103
Table F.1 – Applications using balanced cabling 108
Table F.2 – Modular connector pin assignment for applications....109
Table F.3 – Supported applications using optical fibre cabling....110
Table F.4 – Maximum channel lengths supported by optical fibre applications for multimode fibre 111
Table F.5 – Maximum channel length supported by optical fibre applications for single-mode fibres....112
Table G.1 – Insertion loss deviation. 114
Table H.1 – ACR and PS ACR values for 2 connection class F channels and permanent links at key frequencies 124
Table I.1 – Principal transmission performance requirements of 150 Ω connecting hardware....126
Table I.2 – Minimum return loss limits for links, permanent links and channels for the different cabling classes....128
Table I.3 – Maximum attenuation limits for links, permanent links and channels for the different cabling classes....128
Table I.4 – Minimum NEXT limits for links, permanent links and channels for the different cabling classes....129
Table I.5 – Minimum ACR limits for links, permanent links and channels for the different cabling classes....129
Table I.6 – Maximum propagation delay limits for links, permanent links and channels for the different cabling classes....130
Table I.7 – Maximum d.c. loop resistance limits for links, permanent links and channels for the different cabling classes....130
Table I.8 – Minimum unbalance attenuation (LCL/LCTL) limits for links, permanent links and channels for the different cabling classes 130
Table I.9 – Minimum PS NEXT, PS ACR, ELFEXT and PS ELFEXT limits for permanent links and channels for the different cabling classes....131
Table I.10 – Maximum delay skew limits for permanent links and channels for the different cabling classes....131

--`,,```,,,,````-`-`,,`,,`,`,,`---
Copyright International Organization for Standardization
Provided by IHS under license with ISO
No reproduction or networking permitted without license from IHS
Not for Resale

INFORMATION TECHNOLOGY – GENERIC CABLING FOR CUSTOMER PREMISES

FOREWORD

1) ISO (International Organization for Standardization) and IEC (International Electrotechnical Commission) form the specialized system for worldwide standardization. National bodies that are members of ISO or IEC participate in the development of International Standards through technical committees established by the respective organization to deal with particular fields of technical activity. ISO and IEC technical committees collaborate in fields of mutual interest. Other international organizations, governmental and non-governmental, in liaison with ISO and IEC, also take part in the work.
2) In the field of information technology, ISO and IEC have established a joint technical committee, ISO/IEC JTC 1. Draft International Standards adopted by the joint technical committee are circulated to national bodies for voting. Publication as an International Standard requires approval by at least 75 % of the national bodies casting a vote.
3) Attention is drawn to the possibility that some of the elements of this International Standard may be the subject of patent rights. ISO and IEC shall not be held responsible for identifying any or all such patent rights.

International Standard ISO/IEC 11801 was prepared by subcommittee 25: Interconnection of information technology equipment, of ISO/IEC joint technical committee 1: Information technology.

This second edition cancels and replaces the first edition published in 1995 and its amendments 1 (1999) and 2 (1999) and constitutes a technical revision. The significant changes with respect to the first edition and its amendments are listed in Annex I.

This publication has been drafted in accordance with the ISO/IEC Directives, Part 2.

This International Standard has taken into account requirements specified in application standards listed in Annex F. It refers to International Standards for components and test methods whenever appropriate International Standards are available.

--`,,```,,,,````-`-`,,`,,`,`,,`---

Copyright International Organization for Standardization
Provided by IHS under license with ISO
No reproduction or networking permitted without license from IHS Not for Resale

INTRODUCTION

Within customer premises, the importance of the cabling infrastructure is similar to that of other fundamental building utilities such as heating, lighting and mains power. As with other utilities, interruptions to service can have a serious impact. Poor quality of service due to lack of design foresight, use of inappropriate components, incorrect installation, poor administration or inadequate support can threaten an organisation's effectiveness.

Historically, the cabling within premises comprised both application specific and multipurpose networks. The original edition of this standard enabled a controlled migration to generic cabling and the reduction in the use of application-specific cabling.

The subsequent growth of generic cabling designed in accordance with ISO/IEC 11801 has

a) contributed to the economy and growth of Information and Communications Technology (ICT),
b) supported the development of high data rate applications based upon a defined cabling model, and
c) initiated development of cabling with a performance surpassing the performance classes specified in ISO/IEC 11801:1995 and ISO/IEC 11801 Ed1.2:2000.

NOTE ISO/IEC 11801, edition 1.2 consists of edition 1.0 (1995) and its amendments 1 (1999) and 2 (1999).

This second edition of ISO/IEC 11801 has been developed to reflect these increased demands and opportunities.

This International Standard provides:

a) users with an application independent generic cabling system capable of supporting a wide range of applications;
b) users with a flexible cabling scheme such that modifications are both easy and economical;
c) building professionals (for example, architects) with guidance allowing the accommodation of cabling before specific requirements are known; that is, in the initial planning either for construction or refurbishment;
d) industry and applications standardization bodies with a cabling system which supports current products and provides a basis for future product development.

This International Standard specifies a multi-vendor cabling system which may be implemented with material from single and multiple sources, and is related to:

a) international standards for cabling components developed by committees of the IEC, for example copper cables and connectors as well as optical fibre cables and connectors (see Clause 2 and bibliography);
b) standards for the installation and operation of information technology cabling as well as for the testing of installed cabling (see Clause 2 and bibliography);
c) applications developed by technical committees of the IEC, by subcommittees of ISO/IEC JTC 1 and by study groups of ITU-T, for example for LANs and ISDN;
d) planning and installation guides which take into account the needs of specific applications for the configuration and the use of cabling systems on customer premises(ISO/IEC 14709 series).

Physical layer requirements for the applications listed in Annex F have been analysed to determine their compatibility with cabling classes specified in this standard. These application requirements, together with statistics concerning the topology of premises and the model described in 7.2, have been used to develop the requirements for Classes A to D and the optical class cabling systems. New Classes E and F have been developed in anticipation of future network technologies.

--`,,```,,,,````-`-`,,`,,`,`,,`---
Copyright International Organization for Standardization
Provided by IHS under license with ISO
No reproduction or networking permitted without license from IHS Not for Resale

As a result, generic cabling defined within this International Standard

a) specifies a cabling structure supporting a wide variety of applications,

b) specifies channel and link Classes A, B, C, D and E meeting the requirements of standardised applications,

c) specifies channel and link Classes E and F based on higher performance components to support the development and implementation of future applications,

d) specifies optical channel and link Classes OF-300, OF-500, and OF-2000 meeting the requirements of standardised applications and exploiting component capabilities to ease the implementation of applications developed in the future,

e) invokes component requirements and specifies cabling implementations that ensure performance of permanent links and of channels that meet or exceed the requirements for cabling classes,

f) is targeted at, but not limited to, the general office environment.

This International Standard specifies a generic cabling system that is anticipated to have a usable life in excess of 10 years.

--`,,```,,,,````-`-`,,`,,`,`,,`---

Copyright International Organization for Standardization
Provided by IHS under license with ISO
No reproduction or networking permitted without license from IHS Not for Resale

INFORMATION TECHNOLOGY – GENERIC CABLING FOR CUSTOMER PREMISES

1 Scope

ISO/IEC 11801 specifies generic cabling for use within premises, which may comprise single or multiple buildings on a campus. It covers balanced cabling and optical fibre cabling.

ISO/IEC 11801 is optimised for premises in which the maximum distance over which telecommunications services can be distributed is 2 000 m. The principles of this International Standard may be applied to larger installations.

Cabling defined by this standard supports a wide range of services, including voice, data, text, image and video.

This International Standard specifies directly or via reference the:

a) structure and minimum configuration for generic cabling,

b) interfaces at the telecommunications outlet (TO),

c) performance requirements for individual cabling links and channels,

d) implementation requirements and options,

e) performance requirements for cabling components required for the maximum distances specified in this standard,

f) conformance requirements and verification procedures.

Safety (electrical safety and protection, fire, etc.) and Electromagnetic Compatibility (EMC) requirements are outside the scope of this International Standard, and are covered by other standards and by regulations. However, information given by this standard may be of assistance.

ISO/IEC 11801 has taken into account requirements specified in application standards listed in Annex F. It refers to available International Standards for components and test methods where appropriate.

2 Normative references

The following referenced documents are indispensable for the application of this document. For dated references, only the edition cited applies. For undated references, the latest edition of the referenced document (including any amendments) applies.

IEC 60027 (all parts), *Letter symbols to be used in electrical technology*

IEC 60068-1, *Environmental testing – Part 1: General and guidance*

IEC 60068-2-14, *Environmental testing – Part 2: Tests – Test N: Change of temperature*

IEC 60068-2-38, *Environmental testing – Part 2: Tests – Test Z/AD: Composite temperature/humidity cyclic test*

IEC 60352-3, *Solderless connections – Part 3: Solderless accessible insulation displacement connections – General requirements, test methods and practical guidance*

Copyright International Organization for Standardization
Provided by IHS under license with ISO
No reproduction or networking permitted without license from IHS Not for Resale

IEC 60352-4, *Solderless connections – Part 4: Solderless non-accessible insulation displacement connections – General requirements, test methods and practical guidance*

IEC 60352-6, *Solderless connections – Part 6: Insulation piercing connections – General requirements, test methods and practical guidance*

IEC 60364-1, *Electrical installations of buildings – Part 1: Fundamental principles, assessment of general characteristics, definitions*

IEC 60512-2:1985, *Electromechanical components for electronic equipment; basic testing procedures and measuring methods – Part 2: General examination, electrical continuity and contact resistance tests, insulation tests and voltage stress tests*
Amendment 1 (1994)

IEC 60512-25-1, *Connectors for electronic equipment – Tests and measurements – Part 25-1: Test 25a – Crosstalk ratio*

IEC 60512-25-2:2002, *Connectors for electronic equipment – Tests and measurements – Part 25-2: Test 25b – Attenuation (insertion loss)*

IEC 60512-25-4:2001, *Connectors for electronic equipment – Tests and measurements – Part 25-4: Test 25d – Propagation delay*

IEC 60512-25-5, *– Connectors for electronic equipment – Basic tests and measurements – Part 25-5: Test 25e – Return loss*[1]

IEC 60603-7:1996, *Connectors for frequencies below 3 MHz for use with printed boards – Part 7: Detail specification for connectors, 8-way, including fixed and free connectors with common mating features, with assessed quality*

IEC 60603-7-1:2002, *Connectors for electronic equipment – Part 7-1: Detail specification for 8-way, shielded free and fixed connectors, with common mating features, with assessed quality*

IEC 60603-7-7:2002, *Connectors for electronic equipment – Part 7-7: Detail specification for 8-way, shielded, free and fixed connectors, for data transmission with frequencies up to 600 MHz (category 7, shielded)*

IEC 60793-1-40, *Optical fibres – Part 1-40: Measurement methods and test procedures – Attenuation*

IEC 60793-1-41, *Optical fibres – Part 1-41: Measurement methods and test procedures – Bandwidth*

IEC 60793-1-44, *Optical fibres – Part 1-44: Measurement methods and test procedures – Cut-off wavelength*

IEC/PAS 60793-1-49:2002, *Optical fibres – Part 1-49: Measurement methods and test procedures – Differential mode delay*

IEC 60793-2 (all parts), *Optical fibres – Part 2: Product specifications*

IEC 60793-2-10, *Optical fibres – Part 2-10: Product specifications – Sectional specification for category A1 multimode fibres*

[1] To be published.

Copyright International Organization for Standardization
Provided by IHS under license with ISO
No reproduction or networking permitted without license from IHS Not for Resale

IEC 60793-2-50, *Optical fibres – Part 2-50: Product specifications – Sectional specification for class B single-mode fibres*

IEC 60794-2:1989, *Optical fibre cables – Part 2: Product specification (indoor cable)* [2]

Amendment 1 (1998)

IEC 60794-3 (all parts), *Optical fibre cables – Part 3: Sectional specification – Outdoor cables*

IEC 60825 (all parts), *Safety of laser products*

IEC 60874-1:1999, *Connectors for optical fibres and cables – Part 1: Generic specification*

IEC 60874-14 (all parts), *Connectors for optical fibres and cables – Part 14: Sectional specification for fibre optic connector – Type SC*

IEC 60874-19 (all parts), *Connectors for optical fibres and cables – Part 19: Sectional specification for fibre optic connector – Type SCD(uplex)*

IEC 60874-19-1:1999, *Connectors for optical fibres and cables – Part 19-1: Fibre optic patch cord connector type SC-PC (floating duplex) standard terminated on multimode fibre type A1a, A1b – Detail specification*

IEC 60874-19-2:1999, *Connectors for optical fibres and cables – Part 19-2: Fibre optic adaptor (duplex) type SC for single-mode fibre connectors – Detail specification*

IEC 60874-19-3:1999, *Connectors for optical fibres and cables – Part 19-3: Fibre optic adaptor (duplex) type SC for multimode fibre connectors – Detail specification*

IEC 61073-1, *Mechanical splices and fusion splice protectors for optical fibres and cables – Part 1: Generic specification*

IEC/PAS 61076-3-104:2002, *Connectors for electronic equipment – Part 3-104: Detail specification for 8-way, shielded free and fixed connectors, for data transmissions with frequencies up to 600 MHz*

IEC 61156 (all parts), *Multicore and symmetrical pair/quad cables for digital communications*

IEC 61156-1:1994, *Multicore and symmetrical pair/quad cables for digital communications – Part 1: Generic specification*[3]

Amendment 1:1999
Amendment 2:2001

IEC 61156-2:1995, *Multicore and symmetrical pair/quad cables for digital communications – Part 2: Horizontal floor wiring – Sectional specification*[4]

Amendment 1:1999
Amendment 2:2001

---

2 There exists a consolidated edition 4.1 (1998) of IEC 60794-2 that includes edition 4.0 (1989) and its amendment 1 (1998).

3 There exists a consolidated edition 1.2 (2001) of IEC 61156-1 that includes edition 1.0 (1994) and its amendments 1 (1999) and 2 (2001).

4 There exists a consolidated edition 1.2 (2001) of IEC 61156-2 that includes edition 1.0 (1995) and its amendments 1 (1999) and 2 (2001).

Copyright International Organization for Standardization
Provided by IHS under license with ISO
No reproduction or networking permitted without license from IHS Not for Resale

IEC 61156-3:1995, *Multicore and symmetrical pair/quad cables for digital communications – Part 3: Multicore and symmetrical pair/quad cables for digital communications – Part 3: Work area wiring – Sectional specification*[5]

Amendment 1:1999
Amendment 2:2001

IEC 61156-4:1995, *Multicore and symmetrical pair/quad cables for digital communications – Part 4: Riser cables – Sectional specification*[6]

Amendment 1:1999
Amendment 2:2001

IEC 61156-5:2002, *Multicore and symmetrical pair/quad cables for digital communications – Part 5: Symmetrical pair/quad cables with transmission characteristics up to 600 MHz – Horizontal floor wiring – Sectional specification*

IEC 61156-6:2002, *Multicore and symmetrical pair/quad cables for digital communications – Part 6: Symmetrical pair/quad cables with transmission characteristics up to 600 MHz – Work area wiring – Sectional specification*

IEC 61300-2-2:1995, *Fibre optic interconnecting devices and passive components – Basic test and measurement procedures – Part 2-2: Tests – Mating durability*

IEC 61300-3-6:1997, *Fibre optic interconnecting devices and passive components – Basic test and measurement procedures – Part 3-6: Examinations and measurements – Return loss*[7]

Amendment 1:1998
Amendment 2:1999

IEC 61300-3-34:2001, *Fibre optic interconnecting devices and passive components – Basic test and measurement procedures – Part 3-34: Examinations and measurements – Attenuation of random mated connectors*

IEC 61753-1-1:2000, *Fibre optic interconnecting devices and passive components performance standard – Part 1-1: General and guidance – Interconnecting devices (connectors)*

IEC 61935-1:2000, *Generic cabling systems – Specifications for the testing of balanced communication cabling in accordance with ISO/IEC 11801 – Part 1: Installed cabling*
Amendment 1 (under consideration)

IEC 61935-2, – *Generic cabling systems – Specification for the testing of balanced communication cabling in accordance with ISO/IEC 11801 – Part 2: Patchcords and work area cords*[8]

ISO/IEC TR 14763-1, *Information technology – Implementation and operation of customer premises cabling – Part 1: Administration*

---

5 There exists a consolidated edition 1.2 (2001) of IEC 61156-3 that includes edition 1.0 (1995) and its amendments 1 (1999) and 2 (2001).

6 There exists a consolidated edition 1.2 (2001) of IEC 61156-4 that includes edition 1.0 (1995) and its amendments 1 (1999) and 2 (2001).

7 There exists a consolidated edition 1.2 (1999) of IEC 61300-3-6 that includes edition 1.0 (1997) and its amendments 1 (1999) and 2 (1999).

8 To be published.

Copyright International Organization for Standardization
Provided by IHS under license with ISO
No reproduction or networking permitted without license from IHS Not for Resale

ISO/IEC TR 14763-2, *Information technology – Implementation and operation of customer premises cabling – Part 2: Planning and installation*

ISO/IEC TR 14763-3, *Information technology – Implementation and operation of customer premises cabling – Part 3: Testing of optical fibre cabling*

ISO/IEC 18010:2002, *Information technology – Pathways and spaces for customer premises cabling*

ITU-T Rec. G.652:1993, *Characteristics of a single-mode optical fibre cable*

3 Definitions, abbreviations and symbols

3.1 Definitions

For the purposes of this International Standard, the following definitions apply.

NOTE The abbreviation “lg” in the equations signifies “$\log_{10}$“.

3.1.1
administration
methodology defining the documentation requirements of a cabling system and its containment, the labelling of functional elements and the process by which moves, additions and changes are recorded

3.1.2
application
system, including its associated transmission method, which is supported by telecommunications cabling

3.1.3
attenuation
decrease in magnitude of power of a signal in transmission between points

NOTE Attenuation indicates the total losses on cable, expressed as the ratio of power output to power input.

3.1.4
balanced cable
cable consisting of one or more metallic symmetrical cable elements (twisted pairs or quads)

3.1.5
building backbone cable
cable that connects the building distributor to a floor distributor

NOTE Building backbone cables may also connect floor distributors in the same building.

3.1.6
building distributor
distributor in which the building backbone cable(s) terminate(s) and at which connections to the campus backbone cable(s) may be made

3.1.7
building entrance facility
facility that provides all necessary mechanical and electrical servicesand which complies with all relevant regulations, for the entry of telecommunications cables into a building

--`,,```,,,,````-`-`,,`,,`,`,,`---

Copyright International Organization for Standardization
Provided by IHS under license with ISO
No reproduction or networking permitted without license from IHS Not for Resale

3.1.8
cable
assembly of one or more cable units of the same type and category in an overall sheath

NOTE The assembly may include an overall screen.

3.1.9
cable element
smallest construction unit (for example pair, quad or single fibre) in a cable

NOTE A cable element may have a screen.

3.1.10
cable unit
single assembly of one or more cable elements of the same type or category

NOTE 1 The cable unit may have a screen.

NOTE 2 A binder group is an example of a cable unit.

3.1.11
cabling
system of telecommunications cables, cords and connecting hardware that can support the connection of information technology equipment

3.1.12
campus
premise containing one or more buildings

3.1.13
campus backbone cable
cable that connects the campus distributor to the building distributor(s)

NOTE Campus backbone cables may also connect building distributors directly.

3.1.14
campus distributor
distributor from which the campus backbone cabling starts

3.1.15
channel
end-to-end transmission path connecting any two pieces of application specific equipment

NOTE Equipment and work area cords are included in the channel, but not the connecting hardware into the application specific equipment.

3.1.16
centralised optical fibre cabling
centralised optical fibre cabling techniques create a combined backbone/horizontal channel; this channel is provided from the work areas to the centralised cross-connect or interconnect by allowing the use of pull-through cables or splices

3.1.17
connecting hardware
connecting hardware is considered to consist of a device or a combination of devices used to connect cables or cable elements

3.1.18
connection
mated device or combination of devices including terminations used to connect cables or cable elements to other cables, cable elements or application specific equipment

--`,,```,,,,````-`-`,,`,,`,`,,`---
Copyright International Organization for Standardization
Provided by IHS under license with ISO
No reproduction or networking permitted without license from IHS Not for Resale

3.1.19
consolidation point (CP)
connection point in the horizontal cabling subsystem between a floor distributor and a telecommunications outlet

3.1.20
cord
cable, cable unit or cable element with a minimum of one termination

3.1.21
coupling attenuation
coupling attenuation is the relation between the transmitted power through the conductors and the maximum radiated peak power, conducted and generated by the excited common mode currents

3.1.22
CP cable
cable connecting the consolidation point to the telecommunications outlet(s)

3.1.23
CP link
part of the permanent link between the floor distributor and the consolidation point, including the connecting hardware at each end

3.1.24
cross-connect
apparatus enabling the termination of cable elements and their cross-connection, primarily by means of patch cords or jumpers

NOTE Incoming and outgoing cables are terminated at fixed points.

3.1.25
distributor
term used for a collection of components (such as patch panels, patch cords) used to connect cables

3.1.26
equipment cord
cord connecting equipment to a distributor

3.1.27
equipment room
room dedicated to housing distributors and application specific equipment

3.1.28
external network interface
point of demarcation between public and private network

NOTE In many cases the external network interface is the point of connection between the network provider's facilities and the customer premises cabling.

3.1.29
fixed horizontal cable
cable connecting the floor distributor to the consolidation point if a CP is present, or to the TO if no CP is present

--`,,```,,,,````-`-`,,`,,`,`,,`---
Copyright International Organization for Standardization
Provided by IHS under license with ISO
No reproduction or networking permitted without license from IHS Not for Resale

3.1.30
floor distributor
distributor used to connect between the horizontal cable and other cabling subsystems or equipment

NOTE See also telecommunications room.

3.1.31
generic cabling
structured telecommunications cabling system, capable of supporting a wide range of applications

NOTE Generic cabling can be installed without prior knowledge of the required applications. Application specific hardware is not a part of generic cabling.

3.1.32
horizontal cable
cable connecting the floor distributor to the telecommunications outlet(s)

3.1.33
hybrid cable
assembly of two or more cable units and/or cables of different types or categories in an overall sheath

NOTE The assembly may include an overall screen.

3.1.34
individual work area
minimum building space that would be reserved for an occupant

3.1.35
insertion loss
dB

loss resulting from the insertion of a device into a transmission system

NOTE The ratio of the power delivered to that part of the system following the device before insertion of the device, to the power delivered to this part after insertion of the device. The insertion loss is expressed in decibels.

3.1.36
insertion loss deviation
difference between the measured insertion loss of cascaded components and the insertion loss determined by the sum of the component's losses

3.1.37
interconnect
technique enabling equipment cords (or cabling subsystems) to be terminated and connected to the cabling subsystems without using a patch cord or jumper

NOTE Incoming or outgoing cables are terminated at a fixed point.

3.1.38
interface
point at which connections are made to the generic cabling

3.1.39
jumper
cable, cable unit or cable element without connectors used to make a connection on a cross-connect

Copyright International Organization for Standardization
Provided by IHS under license with ISO
No reproduction or networking permitted without license from IHS Not for Resale

3.1.40
keying
mechanical feature of a connector system, which guarantees polarization or prevents the connection to an incompatible socket or optical fibre adapter

3.1.41
link
either a CP link or permanent link, see CP link and permanent link

3.1.42
longitudinal conversion loss
logarithmic ratio expressed in decibels of the common mode injected signal at the near end to the resultant differential signal at the near end of a balanced pair

3.1.43
longitudinal conversion transfer loss
logarithmic ratio expressed in decibels of the common mode injected signal at the near end to the resultant differential signal at the far end of a balanced pair

3.1.44
multi-user telecommunications outlet assembly
grouping in one location of several telecommunications outlets

3.1.45
optical fibre cable (or optical cable)
cable comprising one or more optical fibre cable elements

3.1.46
optical fibre duplex adapter
mechanical device designed to align and join two duplex connectors

3.1.47
optical fibre duplex connector
mechanical termination device designed to transfer optical power between two pairs of optical fibres

3.1.48
overfilled launch
controlled launch where the test fibre is overfilled with respect to both angle and position to simulate LED launches

3.1.49
pair
two conductors of a balanced transmission line. It generally refers to a twisted-pair or one side circuit

3.1.50
patch cord
cable, cable unit or cable element with connector(s) used to establish connections on a patch panel

3.1.51
patch panel
assembly of multiple connectors designed to accommodate the use of patch cords

NOTE The patch panel facilitates administration for moves and changes.

Copyright International Organization for Standardization
Provided by IHS under license with ISO
No reproduction or networking permitted without license from IHS Not for Resale

3.1.52
permanent link
transmission path between the telecommunications outlet and the floor distributor

NOTE The permanent link does not include work area cords, equipment cords, patch cords and jumpers, but includes the connection at each end. It can include a CP link.

3.1.53
quad
cable element that comprises four insulated conductors twisted together

NOTE Two diametrically facing conductors form a transmission pair.

3.1.54
screened balanced cable
balanced cable with an overall screen and/or screens for the individual elements

3.1.55
side circuit
two diametrically facing conductors in a quad that form a pair

3.1.56
small form factor connector
optical fibre connector designed to accommodate two or more optical fibres with at least the same mounting density as the connector used for balanced cabling

3.1.57
splice
joining of conductors or optical fibres, generally from separate sheaths

3.1.58
telecommunications
branch of technology concerned with the transmission, emission and reception of signs, signals, writing, images and sounds; that is, information of any nature by cable, radio, optical or other electromagnetic systems

NOTE The term telecommunications has no legal meaning when used in this International Standard.

3.1.59
telecommunications room
enclosed space for housing telecommunications equipment, cable terminations, interconnect and cross-connect

3.1.60
telecommunications outlet
fixed connecting device where the horizontal cable terminates

NOTE The telecommunications outlet provides the interface to the work area cabling.

3.1.61
transverse conversion loss
ratio between the common mode signal power and the injected differential mode signal power

3.1.62
twisted pair
cable element that consists of two insulated conductors twisted together in a determined fashion to form a balanced transmission line

3.1.63
unscreened balanced cable
balanced cable without any screens

--`,,```,,,,````-`-,,`,,`,`,,`---

Copyright International Organization for Standardization
Provided by IHS under license with ISO
No reproduction or networking permitted without license from IHS Not for Resale

3.1.64
work area
building space where the occupants interact with telecommunications terminal equipment

3.1.65
work area cord
cord connecting the telecommunications outlet to the terminal equipment

3.2 Abbreviations

a.c.	Alternating current
ACR	Attenuation to crosstalk ratio
APC	Angled physical contact
ATM	Asynchronous transfer mode
BCT	Broadcast and communications technologies, sometimes referred to as HEM
BD	Building distributor
B-ISDN	Broadband ISDN
CD	Campus distributor
CP	Consolidation point
CSMA/CD	Carrier sense multiple access with collision detection
d.c.	Direct current
DCE	Data circuit terminating equipment
DTE	Data terminal equipment
DRL	Distributed return loss
ELFEXT	Equal level far end crosstalk attenuation (loss)
EMC	Electromagnetic compatibility
EQP	Equipment
ER	Equipment room
FD	Floor distributor
FDDI	Fibre distributed data interface
FEXT	Far end crosstalk attenuation (loss)
f.f.s.	For further study
FOIRL	Fibre optic inter-repeater link
HEM	Home Entertainment & Multimedia, see BCT
IC	Integrated circuit
ICT	Information and communications technology
IDC	Insulation displacement connection
IEC	International Electrotechnical Commission
IL	Insertion loss
ILD	Insertion loss deviation
IPC	Insulation piercing connection
ISDN	Integrated services digital network
ISLAN	Integrated services local area network
ISO	International Standardisation Organisation
IT	Information technology
JTC	Joint technical committee
LAN	Local area network
LCL	Longitudinal to differential conversion loss
LCTL	Longitudinal to differential conversion transfer loss
Min.	minimum
MUTO	Multi-user telecommunications outlet
N/A	Not applicable

--`,,```,,,,````-`-`,,`,,`,`,,`---
Copyright International Organization for Standardization
Provided by IHS under license with ISO
No reproduction or networking permitted without license from IHS Not for Resale

NEXT	Near end crosstalk attenuation (loss)
OF	Optical fibre
OFL	Overfilled launch
PBX	Private branch exchange
PC	Physical contact
PMD	Physical layer media dependent
PS NEXT	Power sum NEXT attenuation (loss)
PS ACR	Power sum ACR
PS ELFEXT	Power sum ELFEXT attenuation (loss)
PS FEXT	Power sum FEXT attenuation (loss)
PVC	Polyvinyl chloride
RL	Return loss
SC	Subscriber connector (optical fibre connector)
SC-D	Duplex SC connector
SFF	Small form factor connector
TCL	Transverse conversion loss
TCTL	Transverse conversion transfer loss
TE	Terminal equipment
TO	Telecommunications outlet
TP-PMD	Twisted pair physical medium dependent

3.3 Symbols

3.3.1 Variables

A coefficient of transmission matrix

B length of backbone cable or coefficient of transmission matrix

C length of the CP cable, designation for connector, or coefficient of transmission matrix

D coefficient of transmission matrix

F combined length of patch cords/jumpers, equipment and work area cords

H maximum length of the fixed horizontal cable

K coefficient of cable attenuation increase

L length of cable

X ratio of work area cable attenuation to fixed horizontal cable attenuation

Y ratio of the CP cable attenuation to the fixed horizontal cable attenuation

Z complex impedance

DRL_o constant of the distributed return loss

NVP velocity relative to speed of light (= v/c)

Z_0 characteristic impedance

Z_{fit} curve fitted or average impedance

c speed of light in vacuum

e base of natural logarithm

f frequency

i current number of disturbing pair

j imaginary operator

k current number of disturbed pair

--`,,```,,,,````-`-`,,`,,`,`,,`---

Copyright International Organization for Standardization
Provided by IHS under license with ISO
No reproduction or networking permitted without license from IHS Not for Resale

n total number of pairs ($1 \leq k \leq n$)

t time

v speed of propagation

k_1 constant for the first coefficient of the cable attenuation

k_2 constant for the second coefficient of the cable attenuation

k_3 constant for the third coefficient of the cable attenuation

k_c constant for the coefficient of the connector insertion loss

ϑ temperature in °C

ϑ_coeff temperature coefficient of cable attenuation in %/°C

Φ phase angle in degrees

α attenuation

β phase angle of the propagated signal in rad/m or in radians

γ complex propagation constant ($\gamma = \alpha + j\beta$)

π constant

3.3.2 Indices

C2 index to denominate a characteristic, measured from the connector at the floor distributor (second connector)

CH index to denote the channel

CP index to denote the consolidation point

PL index to denominate a permanent link characteristic

TO index to denominate a characteristic, measured from the TO

cable index to denominate a cable characteristic

channel index to denominate a channel characteristic

connector index to denominate a connector characteristic

cord cable index to indicate a characteristic of the cable used for cords

in index to indicate an input condition

local index to denominate a locally measured characteristic

remote index to denominate a characteristic measured at a distance

term index to indicate a terminating condition

ϑ index to denominate a temperature dependent characteristic

4 Conformance

For conformance to this International Standard the following applies:

a) The configuration and structure shall conform to the requirements outlined in Clause 5.

b) The performance of balanced channels shall meet the requirements specified in Clause 6. This shall be achieved by one of the following conditions:

   1) a channel design and implementation ensuring that the prescribed channel performance is met;

   2) attachment of appropriate components to a permanent link or CP link design meeting the prescribed performance class of Clause 6 and Annex A. Channel performance shall be assured where a channel is created by adding more than one cord to either end of a link meeting the requirements of Clause 6 and Annex A;

Copyright International Organization for Standardization
Provided by IHS under license with ISO
No reproduction or networking permitted without license from IHS Not for Resale

3) using the reference implementations of Clause 7 and compatible cabling components conforming to the requirements of Clauses 9, 10 and 13, based upon a statistical approach of performance modelling.

c) The implementation and performance of optical fibre cabling channels shall meet the requirements specified in Clause 8.

d) The interfaces to the cabling at the TO shall conform to the requirements of Clause 10 with respect to mating interfaces and performance.

e) Connecting hardware at other places in the cabling structure shall meet the performance requirements specified in Clause 10.

f) If present, screens shall be handled as specified in Clause 11.

g) System administration shall meet the requirements of Clause 12.

h) Regulations on safety and EMC applicable at the location of the installation shall be met.

In the absence of the channel the conformance of the link shall be used to verify conformance with the standard.

Conformance testing to the specifications of Clause 6 should be used in the following cases:

a) the design of links or of channels with lengths exceeding those specified in 7.2, or having more components than specified in Clause 7.

b) the design of links or of channels using components whose transmission performance is lower than those described in Clauses 9 and 10;

c) the evaluation of installed cabling to determine its capacity to support a certain group of applications;

d) performance verification, as required, of an installed system designed in accordance with Clauses 7, 9 and 10.

The treatment of measured results that fail to meet the requirements of this clause, or lie within the relevant measurement accuracy, shall be clearly documented within a quality plan as described in ISO/IEC TR 14763-2.

Specifications marked "f.f.s." are preliminary specifications. They are not required for conformance to this International Standard.

5 Structure of the generic cabling system

5.1 General

This clause identifies the functional elements of generic cabling, describes how they are connected together to form subsystems and identifies the interfaces at which application-specific components are connected to the generic cabling.

Applications are supported by connecting equipment to the telecommunications outlets and distributors.

5.2 Functional elements

The functional elements of generic cabling are as follows:

- campus distributor (CD);
- campus backbone cable;
- building distributor (BD);
- building backbone cable;
- floor distributor (FD);

Copyright International Organization for Standardization
Provided by IHS under license with ISO
No reproduction or networking permitted without license from IHS Not for Resale

- horizontal cable;
- consolidation point (CP);
- consolidation point cable (CP cable)
- multi-user telecommunications outlet (MUTO);
- telecommunications outlet (TO).

Groups of these functional elements are connected together to form cabling subsystems.

5.3 Cabling subsystems

5.3.1 General

Generic cabling systems contain up to three cabling subsystems: campus backbone, building backbone and horizontal cabling. The composition of the subsystems is described in 5.3.2, 5.3.3 and 5.3.4. The cabling subsystems are connected together to create a generic cabling system with a structure as shown in Figure 1. The distributors provide the means to configure the cabling to support different topologies like bus, star and ring.

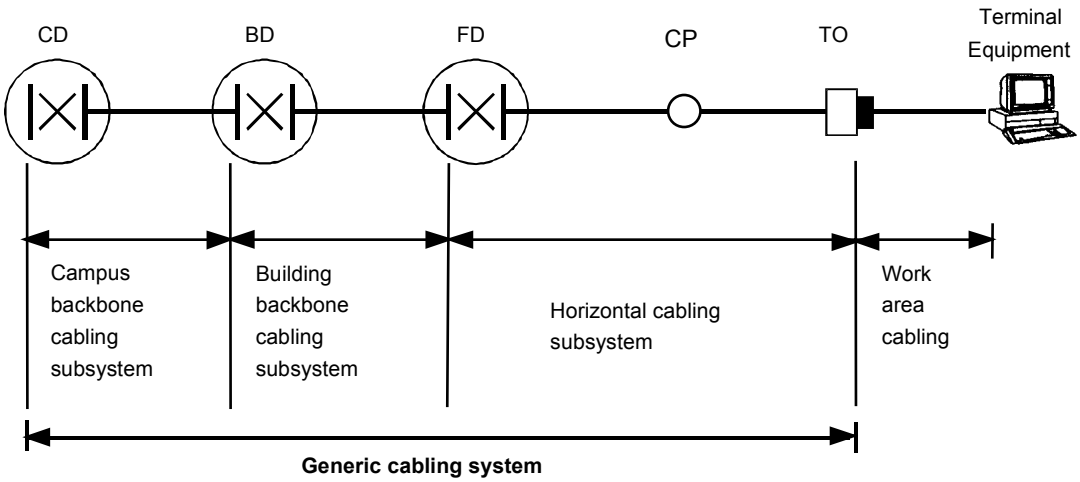

Figure 1 – Structure of generic cabling

Connections between cabling subsystems are either active, requiring application-specific equipment, or passive. Connection to application-specific equipment adopts either an interconnect or a cross-connect approach (see Figure 5 and Figure 6). Passive connections between cabling subsystems are generally achieved using cross-connections by way of either patch cords or jumpers.

In the case of centralised cabling, passive connections in the distributors are achieved by using cross-connections or interconnections. In addition, for centralised optical fibre cabling, it is possible to create connections at the distributors using splices although this reduces the ability of the cabling to support re-configuration.

5.3.2 Campus backbone cabling subsystem

The campus backbone cabling subsystem extends from the campus distributor to the building distributor(s), usually located in separate buildings. When present, the subsystem includes:

- the campus backbone cables;
- any cabling components within the building entrance facilities;
- jumpers and patch cords in the campus distributor;

--`,,```,,,,````-`-`,,`,,`,`,,`---

Copyright International Organization for Standardization
Provided by IHS under license with ISO
No reproduction or networking permitted without license from IHS Not for Resale

- the connecting hardware on which the campus backbone cables are terminated (at both the campus and building distributors).

Although equipment cords are used to connect the transmission equipment to the cabling subsystem, they are not considered part of the cabling subsystem because they are application specific. Where the building distributor does not exist, the campus backbone cabling subsystem extends from the campus distributor to the floor distributor. It is possible for campus backbone cabling to provide direct connection between building distributors. When provided, this cabling shall be in addition to that required for the basic hierarchical topology.

5.3.3 Building backbone cabling subsystem

A building backbone cabling subsystem extends from building distributor(s) to the floor distributor(s). When present, the subsystem includes:

- the building backbone cables;
- jumpers and patch cords in the building distributor;
- the connecting hardware on which the building backbone cables are terminated (at both the building and floor distributors).

Although equipment cords are used to connect the transmission equipment to the cabling subsystem, they are not considered part of the cabling subsystem because they are application specific. It is possible for building backbone cabling to provide direct connection between floor distributors. When provided, this cabling shall be in addition to that required for the basic hierarchical topology.

5.3.4 Horizontal cabling subsystem

The horizontal cabling subsystem extends from a floor distributor to the telecommunications outlet(s) connected to it. The subsystem includes:

- the horizontal cables;
- jumpers and patch cords in the floor distributor;
- the mechanical termination of the horizontal cables at the telecommunications outlet;
- the mechanical termination of the horizontal cables at the floor distributor including the connecting hardware, for example of the interconnect or cross-connect;
- a consolidation point (optional);
- the telecommunications outlets.

Although work area and equipment cords are used to connect terminal and transmission equipment respectively to the cabling subsystem, they are not considered part of the cabling subsystem because they are application specific. Horizontal cables shall be continuous from the floor distributor to the telecommunications outlets unless a consolidation point is installed (see 5.7.6).

5.3.5 Design objectives

Horizontal cabling should be designed to support the broadest set of existing and emerging applications and therefore provide the longest operational life. This will minimise disruption and the high cost of recabling in the work area.

Building backbone cabling should be designed for the entire life of the generic cabling system. However, it is common to adopt short-term approaches that support current and foreseeable application requirements, particularly where there is good physical access to pathways. The selection of campus backbone cabling may require a longer-term approach than that adopted for the building backbone, particularly if access to pathways is more limited.

Copyright International Organization for Standardization
Provided by IHS under license with ISO
No reproduction or networking permitted without license from IHS Not for Resale

5.4 Interconnection of subsystems

5.4.1 General

In generic cabling, the functional elements of the cabling subsystems are interconnected to form a hierarchical structure as shown in Figure 2 and Figure 3.

Where the functions of distributors are combined (see 5.7.1), the intermediate cabling subsystem is not required.

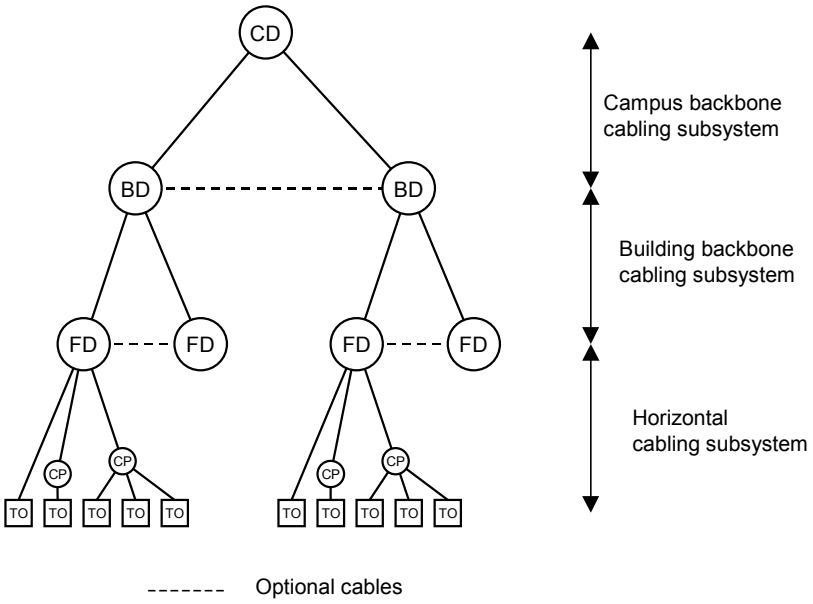

Figure 2 – Hierarchical structure of generic cabling

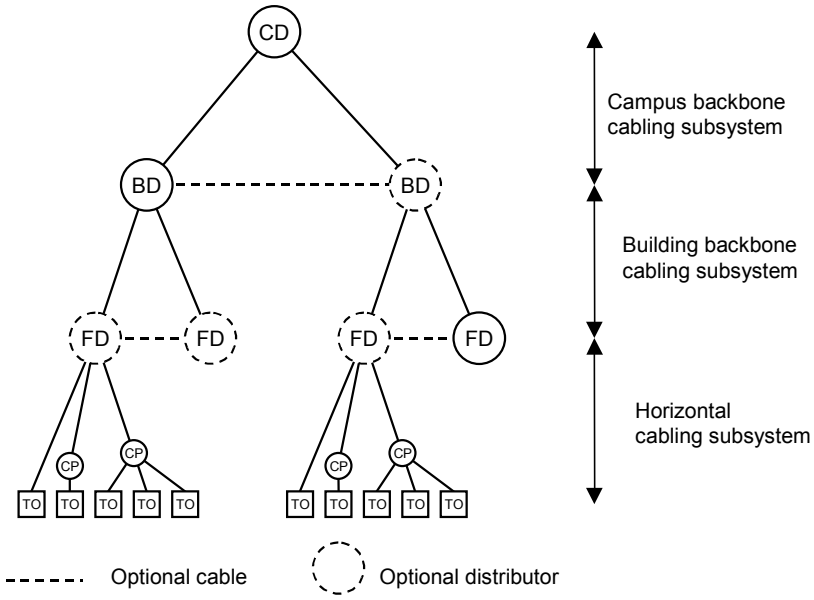

Figure 3 – Structures for centralised generic cabling

--`,,```,,,,````-`-`,,`,,`,`,,`---

Copyright International Organization for Standardization
Provided by IHS under license with ISO
No reproduction or networking permitted without license from IHS
Not for Resale

5.4.2 Centralised cabling architecture

Centralised cabling structures as shown in Figure 3 create combined backbone/horizontal channels. The channels are provided by passive connections in the distributors. The connections are achieved by using either cross-connections or interconnections. In addition, for centralised optical fibre cabling, it is possible to create connections at the distributors using splices although this reduces the ability of the cabling to support re-configuration.

5.5 Accommodation of functional elements

Figure 4 shows an example of how the functional elements are accommodated in a building.

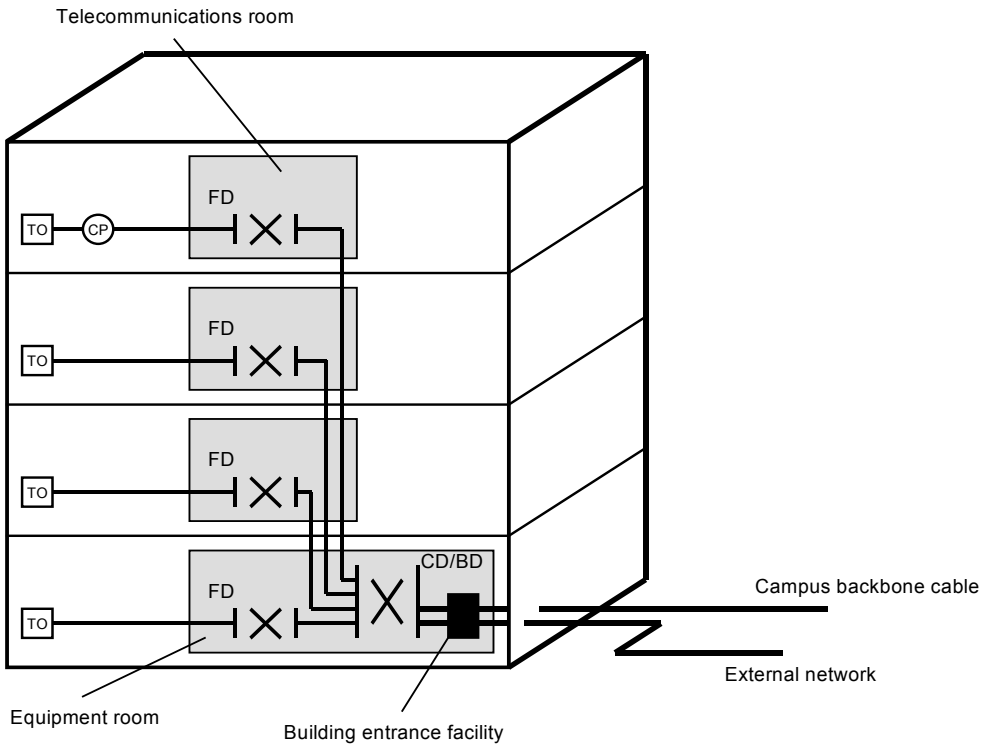

Figure 4 – Accommodation of functional elements

Distributors can be located in equipment rooms or telecommunications rooms. Guidance for the accommodation of distributors is given in ISO/IEC TR 14763-2.

Cables are routed using pathways. A variety of cable management systems can be used to support the cables within the pathways including ducts, conduits and trays. Requirements for the pathways and the cable management systems are provided in ISO/IEC 18010.

Telecommunications outlets are located in the work area.

5.6 Interfaces

5.6.1 Equipment interfaces and test interfaces

Equipment interfaces to generic cabling are located at the ends of each subsystem. Any distributor may have an equipment interface to an external service at any port and may use either interconnects as shown in Figure 5 or cross-connects as shown in Figure 6. The consolidation point does not provide an equipment interface to the generic cabling system. Figure 7 shows the potential equipment interfaces to the horizontal and backbone cabling subsystems.

Copyright International Organization for Standardization
Provided by IHS under license with ISO
No reproduction or networking permitted without license from IHS Not for Resale

Test interfaces to generic cabling are located at the ends of each subsystem and at consolidation points, where present. Figure 7 shows the potential test interfaces to the horizontal cabling subsystem.

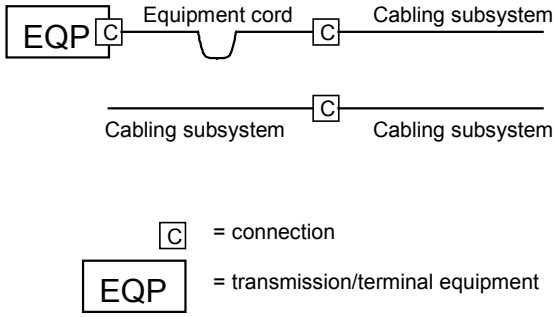

Figure 5 – Interconnect models

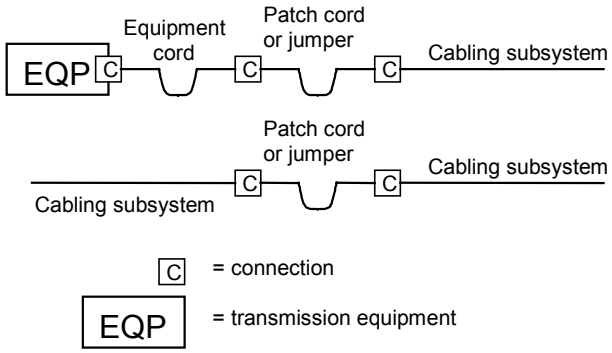

Figure 6 – Cross-connect models

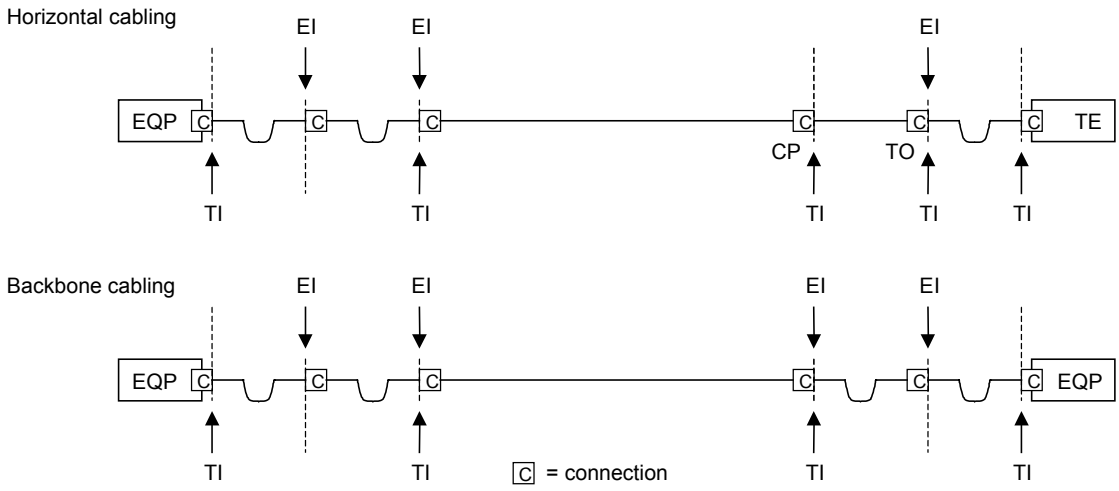

Key:

EI Equipment interface

TI Test interface

Figure 7 – Equipment and test interfaces

Copyright International Organization for Standardization
Provided by IHS under license with ISO
No reproduction or networking permitted without license from IHS
Not for Resale

5.6.2 Channel and permanent link

The transmission performance of generic cabling between specific interfaces is detailed in Clauses 6 and 8 in terms of the channel and the permanent link.

The channel is the transmission path between equipment such as a LAN switch/hub (EQP in Figure 7) and the terminal equipment. A typical channel would consist of the horizontal subsystem together with work area and equipment cords. For longer reach services the channel would be formed by the connection of two or more subsystems (including work area and equipment cords). The performance of the channel excludes the connections at the application-specific equipment.

The permanent link is the transmission path of an installed cabling subsystem including the connecting hardware at the ends of the installed cable. In the horizontal cabling subsystem, the permanent link consists of the telecommunications outlet, the horizontal cable, an optional CP and the termination of the horizontal cable at the floor distributor. The permanent link includes the connections at the ends of the installed cabling.

5.6.3 External network interface

Connections to the public network for the provision of public telecommunications services are made at the external network interface.

5.7 Dimensioning and configuring

5.7.1 Distributors

The number and type of subsystems that are included in a generic cabling implementation depends upon the geography and size of the campus or building, and upon the strategy of the user. Usually there would be one campus distributor per campus, one building distributor per building, and one floor distributor per floor. If the premise comprises only a single building which is small enough to be served by a single building distributor, there is no need for a campus backbone cabling subsystem. Similarly larger buildings may be served by multiple building distributors interconnected via a campus distributor.

The design of the floor distributor should ensure that the lengths of patch cords/jumpers and equipment cords are minimised and administration should ensure that the design lengths are maintained during operation.

Distributors shall be located in such a way that the resulting cable lengths are consistent with the channel performance requirements of Clauses 6 and 8.

In the case of the reference implementations described in Clause 7, distributors shall be located to ensure that the channel lengths in Table 1 are not exceeded. However, not all applications are supported over the maximum lengths shown in Table 1 using a single cable type. Table 21, Table 22 and 23 indicate that the support of specific applications over installed channels may require a mix of cabling media and performance specifications.

Table 1 – Maximum channel lengths

Channel	Length m
Horizontal	100
Horizontal + building backbone + campus backbone	2 000
NOTE In some implementations of the horizontal cabling subsystem in Clause 7, the FD may not support TOs up to the maximum distance shown.	

Copyright International Organization for Standardization
Provided by IHS under license with ISO
No reproduction or networking permitted without license from IHS Not for Resale

A minimum of one floor distributor should be provided for every floor; for floor spaces exceeding 1 000 m², a minimum of one floor distributor should be provided for every 1 000 m^2 of floor space reserved for offices. If a floor space is sparsely populated (for example a lobby), it is permissible to serve this floor from the floor distributor located on an adjacent floor. The functions of multiple distributors may be combined. Figure 8 shows an example of generic cabling. The building in the foreground shows an example with each distributor housed separately. The building in the background shows an example where the functions of a floor distributor and the building distributor have been combined into a single distributor.

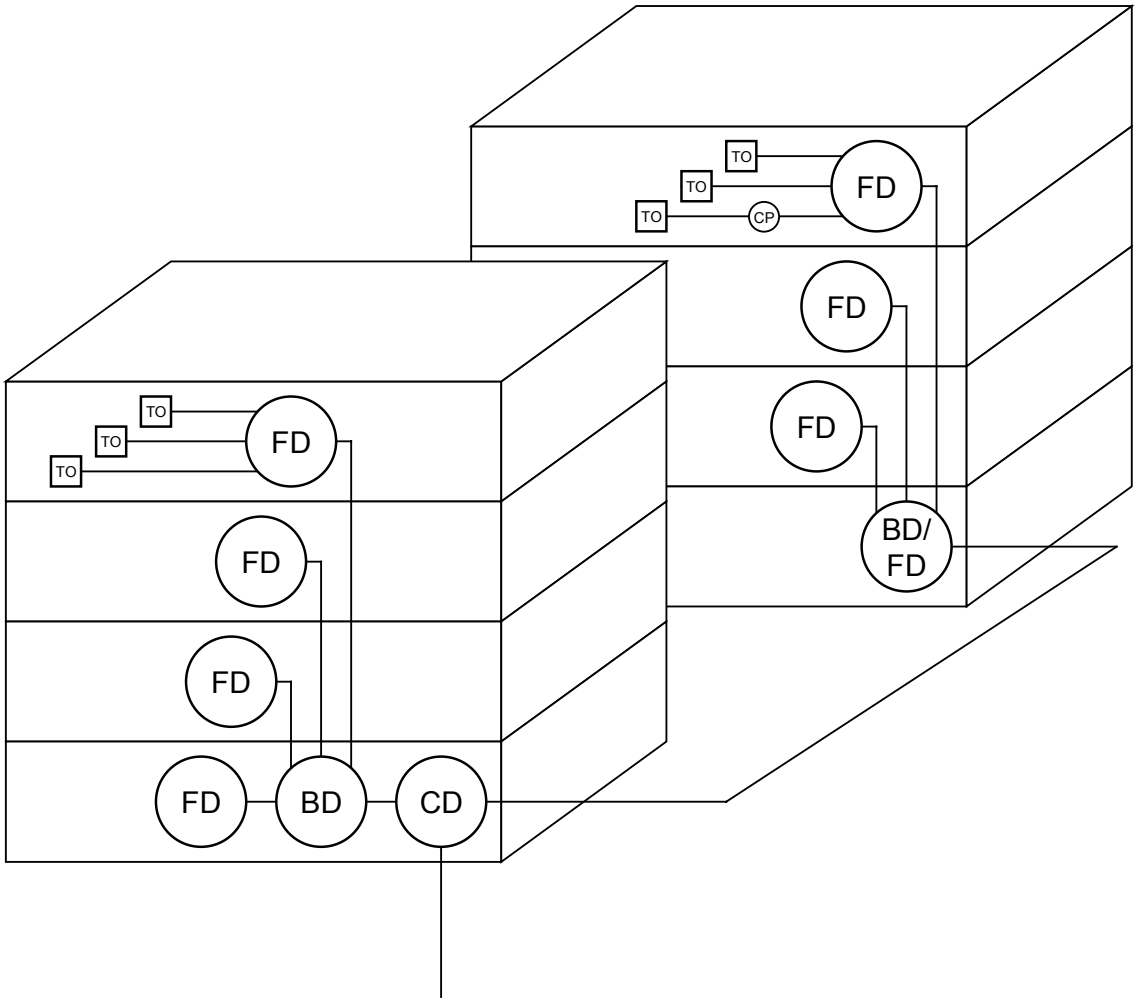

Figure 8 – Example of a generic cabling system with combined BD and FD

In certain circumstances, for example for reasons of security or reliability, redundancy may be built into a cabling design. Figure 9 gives one of many possible examples of the connection of functional elements within the structured framework in order to provide protection against failure within one or more parts of the cabling infrastructure. This might form the basis for the design of generic cabling for a building, providing some protection against such hazards as fire damage or the failure of the public network feeder cable.

Copyright International Organization for Standardization
Provided by IHS under license with ISO
No reproduction or networking permitted without license from IHS Not for Resale

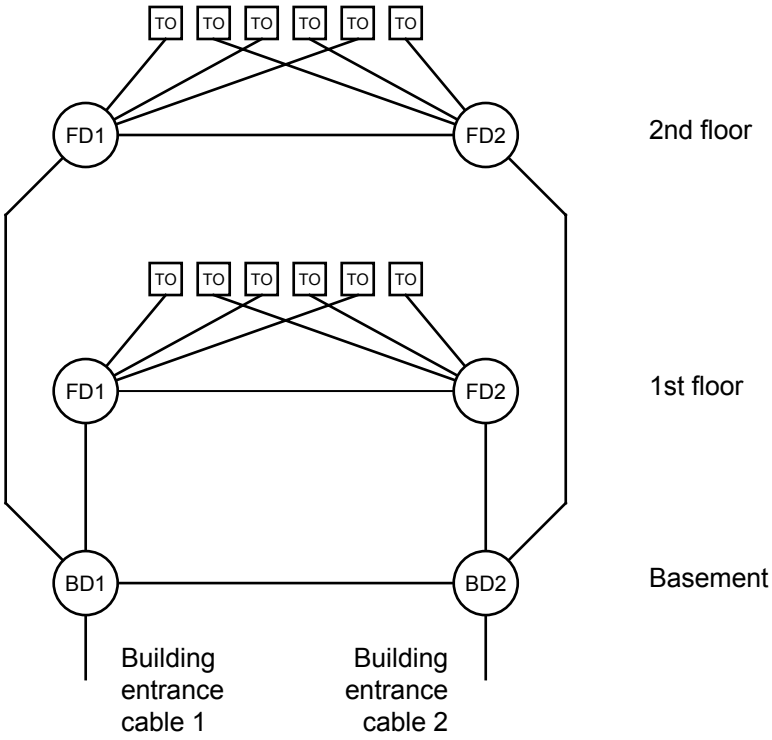

Figure 9 – Inter-relationship of functional elements in an installation with redundancy

5.7.2 Cables

For details of the use of the recommended cable types, see Clause 9. Hardware for connecting cables shall only provide direct onward attachment for each conductor and shall not provide contact between more than one incoming or outgoing conductor (for example, bridge taps shall not be used).

5.7.3 Work area cords and equipment cords

The work area cord connects the telecommunications outlet to the terminal equipment. Equipment cords connect equipment to the generic cabling at distributors. Both are non-permanent and can be application-specific. Assumptions have been made concerning the length and the transmission performance of these cords; the assumptions are identified when relevant. The performance contribution of these cords shall be taken into account in the design of the channel. Clause 7 provides guidance on cord length for reference implementations of generic cabling.

5.7.4 Patch cords and jumpers

Patch cords and jumpers are used within cross-connect implementations at distributors. The performance contribution of these cords shall be taken into account in the design of the channel. Clause 7 provides guidance on cord/jumper lengths for reference implementations of generic cabling.

--`,,```,,,,````-`-`,,`,,`,`,,`---

Copyright International Organization for Standardization
Provided by IHS under license with ISO
No reproduction or networking permitted without license from IHS Not for Resale

5.7.5 Telecommunications outlet (TO)

5.7.5.1 General requirements

The design of generic cabling should insure that telecommunications outlets are installed throughout the usable floor space. A high density of telecommunications outlets will enhance the ability of the cabling to accommodate changes. Telecommunications outlets may be presented individually or in groups.

- Each individual work area shall be served by a minimum of two TOs. For guidance on work area size, see ISO/IEC TR 14763-2.
- The first outlet should be for 4 pair balanced cable terminated in accordance with 10.2.1.
- The second outlet may be for:

  a) optical fibre or

  b) 4 pair balanced cable terminated in accordance with 10.2.1;
- Each telecommunications outlet shall have a permanent means of identification that is visible to the user.
- Devices such as baluns and impedance matching adapters, if used, shall be external to the outlet.

For balanced cable, 2 pairs per TO may be used as an alternative to 4 pairs. However, this may require pair reassignment and will not support some applications (see Annex F). Care should be taken that the initial pair assignment, and all subsequent changes, are recorded (see ISO/IEC 14763-1 for details of administration requirements). Pair reassignment by means of inserts is allowed.

5.7.5.2 Single user TO assembly

In a general implementation of generic cabling, one assembly of TOs serves a single work area. The length of work area cords should be minimised. The implementation topology shall be selected from the options described in 7.2.2.2 (for balanced cabling) and in 8.4 (for optical fibre cabling). The assembly of TOs shall be known as a single user TO assembly.

In addition, where the single user TO assembly is used:

a) a single user TO assembly should be located in user-accessible locations;

b) the performance contribution of work area cords, patch cords and equipment cords shall be taken into account to ensure that the channel requirements of Clause 6 (for balanced cabling) and Clause 8 (for optical fibre cabling) are met.

5.7.5.3 Multi-user TO assembly (MUTO)

In an open office environment, a single assembly of TOs may be used to serve more than one work area. The implementation topology shall be selected from the options described in 7.2.2.2 (for balanced cabling) and in 8.4 (for optical fibre cabling), and the assembly of TOs shall be known as a multi-user TO assembly.

In addition, where the multi-user TO assembly is used:

a) a multi-user TO assembly shall be located in an open work area so that each work area group is served by at least one multi-user TO assembly;

b) a multi-user TO assembly should be limited to serving a maximum of twelve work areas;

c) a multi-user TO assembly should be located in user-accessible, permanent locations such as on building columns and permanent walls;

d) a multi-user TO assembly shall not be installed in obstructed areas:

Copyright International Organization for Standardization
Provided by IHS under license with ISO
No reproduction or networking permitted without license from IHS Not for Resale

e) the performance contribution of work area cords, patch cords and equipment cords shall be taken into account to ensure that the channel requirements of Clause 6 (for balanced cabling) and Clause 8 (for optical fibre cabling) are met;

f) the length of the work area cord should be limited to ensure cable management in the work area.

5.7.6 Consolidation point

The installation of a consolidation point in the horizontal cabling between the floor distributor and the telecommunications outlet may be useful in an open office environment where the flexibility of relocating TOs in the work area is required. One consolidation point is permitted between a FD and any TO. The consolidation point shall only contain passive connecting hardware and shall not be used for cross-connections.

In addition, where a consolidation point is used:

a) the consolidation point shall be located so that each work area group is served by at least one consolidation point;

b) the consolidation point should be limited to serving a maximum of twelve work areas;

c) a consolidation point should be located in accessible locations;

d) for balanced cabling, the consolidation point shall be located so that there is at least 15 m from it to the floor distributor;

e) a consolidation point shall be part of the administration system.

5.7.7 Telecommunications rooms and equipment rooms

A telecommunications room should provide all the facilities (space, power, environmental control etc.) for passive components, active devices, and external network interfaces housed within it. Each telecommunications room should have direct access to the backbone cabling subsystem.

An equipment room is an area within a building where equipment is housed. Equipment rooms are treated differently from telecommunications rooms because of the nature or complexity of the equipment (for example, PBXs or extensive computer installations). More than one distributor may be located in an equipment room. If a telecommunications room serves more than one building distributor it should be considered an equipment room.

5.7.8 Building entrance facilities

Building entrance facilities are required whenever campus backbone, public and private network cables (including from antennae) enter buildings and a transition is made to internal cables. It comprises an entrance point from the exterior of the building and the pathway leading to the campus or building distributor. Local regulations may require special facilities where the external cables are terminated. At this termination point, a change from external to internal cable can take place.

5.7.9 External services cabling

The distance from external services to a distributor can be significant. The performance of the cable between these points should be considered as part of the initial design and implementation of customer applications.

--`,,```,,,,````-`-`,,`,,`,`,,`---
Copyright International Organization for Standardization
Provided by IHS under license with ISO
No reproduction or networking permitted without license from IHS Not for Resale

6 Performance of balanced cabling

6.1 General

This clause specifies the minimum performance of generic balanced cabling. The performance of balanced cabling is specified for channels, permanent links and CP links (see Figure 10).

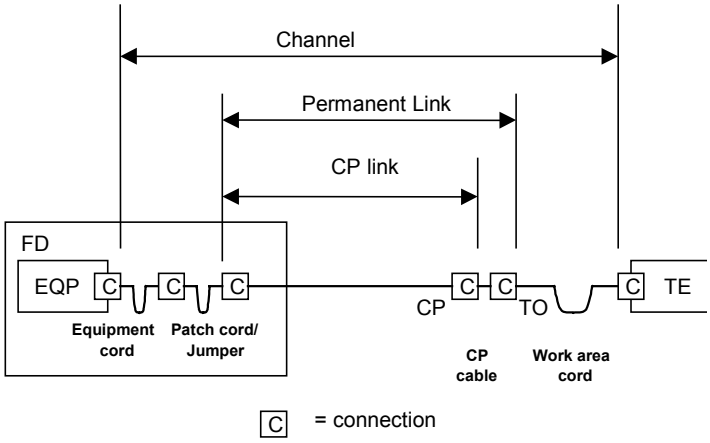

Figure 10 – Channel, permanent link and CP link of a balanced cabling

In the case of cable sharing, additional requirements should be taken into account for balanced cabling. The additional crosstalk requirements for balanced cables are specified in 9.3.

The performance specifications are separated into six classes (A to F) for balanced cabling. This allows the successful transmission of applications over channels according to Annex F which lists the applications and the minimum class required.

The channel performance requirements described in this clause may be used for the design and verification of any implementation of this International Standard. Where required, the test methods defined or referred to by this clause, shall apply. In addition, these requirements can be used for application development and troubleshooting.

The permanent link and CP link performance requirements described in Annex A may be used for acceptance testing of any implementation of this International Standard. Where required, the test methods defined or referred to by Annex A, shall apply.

The specifications in this clause allow for the transmission of defined classes of applications over distances other than those of 7.2, and/or using media and components with different performances than those specified in Clauses 9, 10 and 13.

The channel, permanent link and CP link performance specification of the relevant class shall be met for all temperatures at which the cabling is intended to operate.

There shall be adequate margins to account for temperature dependence of cabling components as per relevant standards and suppliers' instructions. In particular, consideration should be given to measuring performance at worst case temperatures, or calculating worst case performance based on measurements made at other temperatures.

Compatibility between cables used in the same channel or permanent link shall be maintained throughout the cabling system. For example, connections between cables with different nominal impedance shall not be made.

Copyright International Organization for Standardization
Provided by IHS under license with ISO
No reproduction or networking permitted without license from IHS Not for Resale

6.2 Layout

The performance of a channel is specified at and between connections to active equipment. The channel comprises only passive sections of cable, connecting hardware, work area cords, equipment cords and patch cords. The connections at the hardware interface to active equipment are not taken into account.

Application support depends on channel performance only, which in turn depends on cable length, number of connections, connector termination practices and workmanship, and performance. It is possible to achieve equivalent channel performance over greater lengths by the use of fewer connections or by using components with higher performance (see also Annex G).

The performance limits for balanced cabling channels are given in 6.4. These limits are derived from the component performance limits of Clause 9 and 10 assuming the channel is composed of 90 m of solid conductor cable, 10 m of cord(s) and four connections (see Figure 10).

Most class F channels are implemented with two connections only. Additional information concerning this implementation is given in Annex H.

Figure 11 shows an example of terminal equipment in the work area connected to transmission equipment using two different media channels, which are cascaded. In fact there is an optical fibre channel (see Clause 8) connected via an active component in the FD to a balanced cabling channel. There are four channel interfaces; one at each end of the balanced channel, and one at each end of the optical fibre channel.

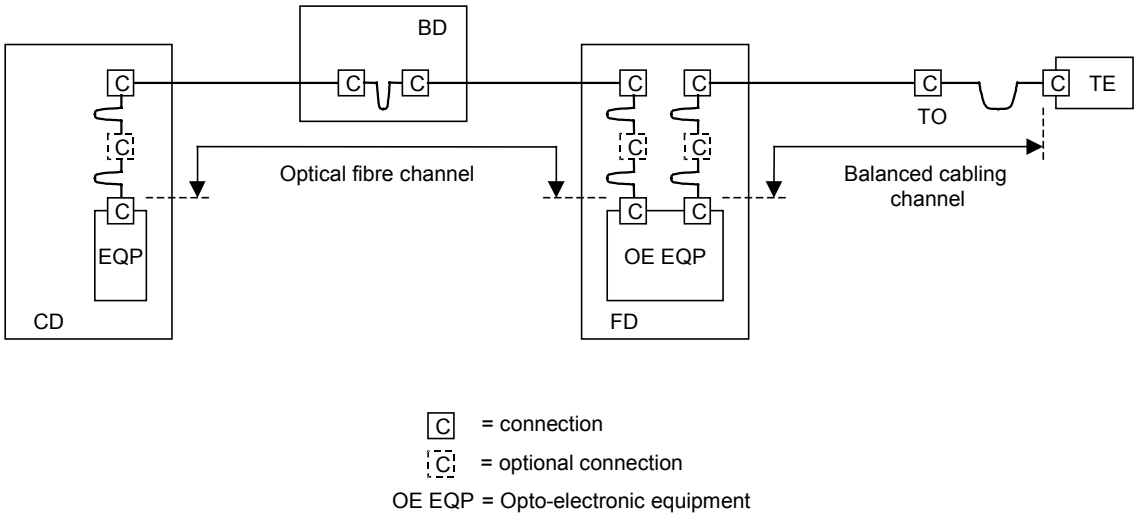

Figure 11 – Example of a system showing the location of cabling interfaces and extent of associated channels

The performance of a permanent link is specified for horizontal cabling at and between the TO and the first patch panel at the other side of the horizontal cable; it may contain a CP. The performance of a CP link is specified for horizontal cabling at and between the CP and the first patch panel at the other side of the horizontal cable. For backbone cabling the permanent link is specified at and between the patch panels at each side of the backbone cable. The permanent link and CP link comprise only passive sections of cable and connecting hardware.

The performance limits for balanced cabling permanent links and CP links are given in Annex A.

--`,,```,,,,````-`-`,,`,,`,`,,`---

Copyright International Organization for Standardization
Provided by IHS under license with ISO
No reproduction or networking permitted without license from IHS Not for Resale

The performance limits for balanced cabling permanent links with maximum implementation are also given in Annex A. These limits are derived from the component performance limits of Clauses 9 and 10 assuming the permanent link is composed of 90 m of solid conductor cable and three connections (see Figure 10).

Most class F permanent links are implemented with two connections only. Additional information concerning this implementation is given in Annex H.

6.3 Classification of balanced cabling

This standard specifies the following classes for balanced cabling.

Class A is specified up to 100 kHz.

Class B is specified up to 1 MHz.

Class C is specified up to 16 MHz.

Class D is specified up to 100 MHz.

Class E is specified up to 250 MHz.

Class F is specified up to 600 MHz.

A Class A channel is specified so that it will provide the minimum transmission performance to support Class A applications. Similarly, Class B, C, D, E and F channels provide the transmission performance to support Class B, C, D, E and F applications respectively. Links and channels of a given class will support all applications of a lower class. Class A is regarded as the lowest class.

Channels, permanent links and CP links in the horizontal cabling shall be installed to provide a minimum of Class D performance.

Annex F lists known applications by classes.

6.4 Balanced cabling performance

6.4.1 General

The parameters specified in this subclause apply to channels with screened or unscreened cable elements, with or without an overall screen, unless explicitly stated otherwise.

The nominal impedance of channels is 100 Ω. This is achieved by suitable design and appropriate choice of cabling components (irrespective of their nominal impedance).

The requirements in this subclause are given by limits computed to one decimal place, using the equation for a defined frequency range. The limits for the propagation delay and delay skew are computed to three decimal places. The additional tables are for information only and have limits derived from the relevant equation at key frequencies.

6.4.2 Return loss

The return loss requirements are applicable only to Classes C, D, E and F.

The return loss (*RL*) of each pair of a channel shall meet the requirements derived by the equation in Table 2.

The return loss requirements shall be met at both ends of the cabling. Return loss (*RL*) values at frequencies where the insertion loss (*IL*) is below 3,0 dB are for information only.

Copyright International Organization for Standardization
Provided by IHS under license with ISO
No reproduction or networking permitted without license from IHS Not for Resale

When required, the return loss (*RL*) shall be measured according to IEC 61935-1. Terminations of 100 Ω shall be connected to the cabling elements under test at the remote end of the channel.

Table 2 – Return loss for channel

Class	Frequency MHz	Minimum return loss dB
C	$1 \le f \le 16$	15,0
D	$1 \le f < 20$	17,0
	$20 \le f \le 100$	$30 - 10\lg(f)$
E	$1 \le f < 10$	19,0
	$10 \le f < 40$	$24 - 5\lg(f)$
	$40 \le f \le 250$	$32 - 10\lg(f)$
F	$1 \le f < 10$	19,0
	$10 \le f < 40$	$24 - 5\lg(f)$
	$40 \le f < 251{,}2$	$32 - 10\lg(f)$
	$251{,}2 \le f \le 600$	8,0

Table 3 – Informative return loss values for channel at key frequencies

Frequency MHz	Minimum return loss dB			
	Class C	**Class D**	**Class E**	**Class F**
1	15,0	17,0	19,0	19,0
16	15,0	17,0	18,0	18,0
100	N/A	10,0	12,0	12,0
250	N/A	N/A	8,0	8,0
600	N/A	N/A	N/A	8,0

6.4.3 Insertion loss/attenuation

Previous editions of this standard use the term “attenuation”, which is still widely used in the cable industry. However, due to impedance mismatches in cabling systems, especially at higher frequencies, this characteristic is better described as “insertion loss”. In this edition, the term “insertion loss” is adopted throughout to describe the signal attenuation over the length of channels, links and components. Unlike attenuation, insertion loss does not scale linearly with length.

The term “attenuation” is maintained for the following parameters:

- attenuation to crosstalk ratio (ACR) – see 6.4.5;
- unbalanced attenuation – see 6.4.14;
- coupling attenuation – see 6.4.15.

For the calculation of *ACR, PS ACR, ELFEXT* and *PS ELFEXT*, the corresponding value for insertion loss (*IL*) shall be used.

Copyright International Organization for Standardization
Provided by IHS under license with ISO
No reproduction or networking permitted without license from IHS Not for Resale

The insertion loss (*IL*) of each pair of a channel shall meet the requirements derived by the equation in Table 4.

When required, the *insertion loss* shall be measured according to IEC 61935-1.

Table 4 – Insertion loss for channel

Class	Frequency MHz	Maximum insertion loss [a] dB
A	$f = 0{,}1$	16,0
B	$f = 0{,}1$	5,5
	$f = 1$	5,8
C	$1 \le f \le 16$	$1{,}05 \times \left(3{,}23\sqrt{f}\right) + 4 \times 0{,}2$
D	$1 \le f \le 100$	$1{,}05 \times \left(1{,}910\,8\sqrt{f} + 0{,}022\ 2 \times f + 0{,}2/\sqrt{f}\right) + 4 \times 0{,}04 \times \sqrt{f}$
E	$1 \le f \le 250$	$1{,}05 \times \left(1{,}82\sqrt{f} + 0{,}016\,9 \times f + 0{,}25/\sqrt{f}\right) + 4 \times 0{,}02 \times \sqrt{f}$
F	$1 \le f \le 600$	$1{,}05 \times \left(1{,}8\sqrt{f} + 0{,}01 \times f + 0{,}2/\sqrt{f}\right) + 4 \times 0{,}02 \times \sqrt{f}$

[a] Insertion loss (*IL*) at frequencies that correspond to calculated values of less than 4,0 dB shall revert to a maximum requirement of 4,0 dB.

Table 5 – Informative insertion loss values for channel at key frequencies

Frequency MHz	Maximum insertion loss dB					
	Class A	Class B	Class C	Class D	Class E	Class F
0,1	16,0	5,5	N/A	N/A	N/A	N/A
1	N/A	5,8	4,2	4,0	4,0	4,0
16	N/A	N/A	14,4	9,1	8,3	8,1
100	N/A	N/A	N/A	24,0	21,7	20,8
250	N/A	N/A	N/A	N/A	35,9	33,8
600	N/A	N/A	N/A	N/A	N/A	54,6

6.4.4 NEXT

6.4.4.1 Pair-to-pair NEXT

The *NEXT* between each pair combination of a channel shall meet the requirements derived by the equation in Table 6.

The *NEXT* requirements shall be met at both ends of the cabling. *NEXT* values at frequencies where the insertion loss (*IL*) is below 4,0 dB are for information only.

When required, the *NEXT* shall be measured according to IEC 61935-1.

Copyright International Organization for Standardization
Provided by IHS under license with ISO
No reproduction or networking permitted without license from IHS Not for Resale

Table 6 – NEXT for channel

Class	Frequency MHz	Minimum NEXT dB
A	$f = 0{,}1$	27,0
B	$0{,}1 \le f \le 1$	$25 - 15 \lg(f)$
C	$1 \le f \le 16$	$39{,}1 - 16{,}4 \lg(f)$
D	$1 \le f \le 100$	$-20 \lg\left(10^{\frac{65{,}3 - 15\lg(f)}{-20}} + 2 \times 10^{\frac{83 - 20\lg(f)}{-20}}\right)$ [a]
E	$1 \le f \le 250$	$-20 \log\left(10^{\frac{74{,}3 - 15\lg(f)}{-20}} + 2 \times 10^{\frac{94 - 20\lg(f)}{-20}}\right)$ [b]
F	$1 \le f \le 600$	$-20 \lg\left(10^{\frac{102{,}4 - 15\lg(f)}{-20}} + 2 \times 10^{\frac{102{,}4 - 15\lg(f)}{-20}}\right)$ [b]

[a] *NEXT* at frequencies that correspond to calculated values of greater than 60,0 dB shall revert to a minimum requirement of 60,0 dB.

[b] *NEXT* at frequencies that correspond to calculated values of greater than 65,0 dB shall revert to a minimum requirement of 65,0 dB.

Table 7 – Informative NEXT values for channel at key frequencies

Frequency MHz	Minimum channel NEXT dB					
	Class A	Class B	Class C	Class D	Class E	Class F
0,1	27,0	40,0	N/A	N/A	N/A	N/A
1	N/A	25,0	39,1	60,0	65,0	65,0
16	N/A	N/A	19,4	43,6	53,2	65,0
100	N/A	N/A	N/A	30,1	39,9	62,9
250	N/A	N/A	N/A	N/A	33,1	56,9
600	N/A	N/A	N/A	N/A	N/A	51,2

6.4.4.2 Power sum NEXT (PS NEXT)

The *PS NEXT* requirements are applicable only to Classes D, E and F.

The *PS NEXT* of each pair of a channel shall meet the requirements derived by the equation in Table 8.

The PS NEXT requirements shall be met at both ends of the cabling. *PS NEXT* values at frequencies where the insertion loss (*IL*) is below 4,0 dB are for information only.

Copyright International Organization for Standardization
Provided by IHS under license with ISO
No reproduction or networking permitted without license from IHS Not for Resale

PS NEXT$_k$ of pair *k* is computed as follows:

$$PS\,NEXT_k = -10\lg\left(\sum_{i=1,\,i\neq k}^{n} 10^{\frac{-NEXT_{ik}}{10}}\right) \quad (1)$$

where

i is the number of the disturbing pair;

k is the number of the disturbed pair;

n is the total number of pairs;

NEXT$_{ik}$ is the near end crosstalk loss coupled from pair *i* into pair *k*.

Table 8 – PS NEXT for channel

Class	**Frequency** MHz	**Minimum PS NEXT** dB
D	$1 \le f \le 100$	$-20\lg\left(10^{\frac{62{,}3-15\lg(f)}{-20}}+2\times10^{\frac{80-20\lg(f)}{-20}}\right)$ [a]
E	$1 \le f \le 250$	$-20\lg\left(10^{\frac{72{,}3-15\lg(f)}{-20}}+2\times10^{\frac{90-20\lg(f)}{-20}}\right)$ [b]
F	$1 \le f \le 600$	$-20\lg\left(10^{\frac{99{,}4-15\lg(f)}{-20}}+2\times10^{\frac{99{,}4-15\lg(f)}{-20}}\right)$ [b]

[a] *PS NEXT* at frequencies that correspond to calculated values of greater than 57,0 dB shall revert to a minimum requirement of 57,0 dB.

[b] *PS NEXT* at frequencies that correspond to calculated values of greater than 62,0 dB shall revert to a minimum requirement of 62,0 dB.

Table 9 – Informative PS NEXT values for channel at key frequencies

Frequency MHz	**Minimum PS NEXT** dB		
	Class D	**Class E**	**Class F**
1	57,0	62,0	62,0
16	40,6	50,6	62,0
100	27,1	37,1	59,9
250	N/A	30,2	53,9
600	N/A	N/A	48,2

--`,,```,,,,````-`-`,,`,,`,`,,`---

Copyright International Organization for Standardization
Provided by IHS under license with ISO
No reproduction or networking permitted without license from IHS Not for Resale

6.4.5 Attenuation to crosstalk ratio (ACR)

The *ACR* requirements are applicable only to Classes D, E and F.

6.4.5.1 Pair-to-pair ACR

Pair-to-pair *ACR* is the difference between the pair-to-pair *NEXT* and the insertion loss (*IL*) of the cabling in dB.

The *ACR* of each pair combination of a channel shall meet the difference of the *NEXT* requirement of Table 6 and the insertion loss (*IL*) requirement of Table 4 of the respective class.

The *ACR* requirements shall be met at both ends of the cabling.

ACR_{ik} of pairs *i* and *k* is computed as follows:

$$ACR_{ik} = NEXT_{ik} - IL_k \quad (2)$$

where

i is the number of the disturbing pair;

k is the number of the disturbed pair;

$NEXT_{ik}$ is the near end crosstalk loss coupled from pair *i* into pair *k*;

IL_k is the insertion loss of pair *k*. When required, it shall be measured according to IEC 61935-1.

Table 10 – Informative ACR values for channel at key frequencies

Frequency MHz	**Minimum ACR** dB		
	Class D	**Class E**	**Class F**
1	56,0	61,0	61,0
16	34,5	44,9	56,9
100	6,1	18,2	42,1
250	N/A	–2,8	23,1
600	N/A	N/A	–3,4

6.4.5.2 Power sum ACR (PS ACR)

The *PS ACR* of each pair of a channel shall meet the difference of the *PS NEXT* requirement of Table 8 and the insertion loss (*IL*) requirement of Table 4 of the respective class.

The *PS ACR* requirements shall be met at both ends of the cabling.

Copyright International Organization for Standardization
Provided by IHS under license with ISO
No reproduction or networking permitted without license from IHS Not for Resale

PS ACR$_k$ of pair *k* is computed as follows:

$$PS\,ACR_k = PS\,NEXT_k - IL_k \quad (3)$$

where

k is the number of the disturbed pair;

PS NEXT$_k$ is the power sum near end crosstalk loss of pair *k*;

IL$_k$ is the insertion loss of pair *k*. When required, it shall be measured according to IEC 61935-1.

Table 11 – Informative PS ACR values for channel at key frequencies

Frequency MHz	**Minimum PS ACR** dB		
	Class D	**Class E**	**Class F**
1	53,0	58,0	58,0
16	31,5	42,3	53,9
100	3,1	15,4	39,1
250	N/A	–5,8	20,1
600	N/A	N/A	–6,4

6.4.6 ELFEXT

The *ELFEXT* requirements are applicable only to Classes D, E and F.

6.4.6.1 Pair-to-pair ELFEXT

The *ELFEXT* of each pair combination of a channel shall meet the requirements derived by the equation in Table 12.

ELFEXT$_{ik}$ of pairs *i* and *k* is computed as follows:

$$ELFEXT_{ik} = FEXT_{ik} - IL_k \quad (4)$$

where

i is the number of the disturbed pair;

k is the number of the disturbing pair;

FEXT$_{ik}$ is the far end crosstalk loss coupled from pair *i* into pair *k*. When required, it shall be measured according to IEC 61935-1.

IL$_k$ is the insertion loss of pair *k*. When required, it shall be measured according to IEC 61935-1.

NOTE The ratio of the insertion loss (*IL*) of the disturbed pair to the input-to-output *FEXT* is relevant for the signal-to-noise-ratio consideration. The results computed in accordance with the formal definition above cover all possible combinations of insertion loss of wire pairs and corresponding input-to-output *FEXT*.

--`,,```,,,,````-`-`,,`,,`,`,,`---

Copyright International Organization for Standardization
Provided by IHS under license with ISO
No reproduction or networking permitted without license from IHS Not for Resale

Table 12 – ELFEXT for channel

Class	Frequency MHz	Minimum ELFEXT [a] dB
D	$1 \le f \le 100$	$-20\lg\left(10^{\frac{63{,}8-20\lg(f)}{-20}}+4\times10^{\frac{75{,}1-20\lg(f)}{-20}}\right)$ [b]
E	$1 \le f \le 250$	$-20\lg\left(10^{\frac{67{,}8-20\lg(f)}{-20}}+4\times10^{\frac{83{,}1-20\lg(f)}{-20}}\right)$ [c]
F	$1 \le f \le 600$	$-20\lg\left(10^{\frac{94-20\lg(f)}{-20}}+4\times10^{\frac{90-15\lg(f)}{-20}}\right)$ [c]

[a] *ELFEXT* at frequencies that correspond to measured *FEXT* values of greater than 70,0 dB are for information only.

[b] *ELFEXT* at frequencies that correspond to calculated values of greater than 60,0 dB shall revert to a minimum requirement of 60,0 dB.

[c] *ELFEXT* at frequencies that correspond to calculated values of greater than 65,0 dB shall revert to a minimum requirement of 65,0 dB.

Table 13 – Informative ELFEXT values for channel at key frequencies

Frequency MHz	Minimum ELFEXT dB		
	Class D	Class E	Class F
1	57,4	63,3	65,0
16	33,3	39,2	57,5
100	17,4	23,3	44,4
250	N/A	15,3	37,8
600	N/A	N/A	31,3

6.4.6.2 Power sum ELFEXT (PS ELFEXT)

The *PS ELFEXT* of each pair of a channel shall meet the requirements derived by the equation in Table 14.

PS ELFEXT$_k$ of pair *k* is computed as follows:

$$PS\ ELFEXT_k = -10\lg\left(\sum_{i=1,\,i\neq k}^{n} 10^{\frac{-ELFEXT_{ik}}{10}}\right) \quad (5)$$

where

i is the number of the disturbing pair;

k is the number of the disturbed pair;

N is the total number of pairs;

ELFEXT$_{ik}$ is the equal level far end crosstalk loss coupled from pair *i* into pair *k*.

--`,,```,,,,````-`-`,,`,,`,`,,`---

Copyright International Organization for Standardization
Provided by IHS under license with ISO
No reproduction or networking permitted without license from IHS Not for Resale

Table 14 – PS ELFEXT for channel

Class	Frequency MHz	Minimum PS ELFEXT [a] dB
D	$1 \le f \le 100$	$-20\lg\left(10^{\frac{60{,}8-20\lg(f)}{-20}}+4\times10^{\frac{72{,}1-20\lg(f)}{-20}}\right)$ [b]
E	$1 \le f \le 250$	$-20\lg\left(10^{\frac{64{,}8-20\lg(f)}{-20}}+4\times10^{\frac{80{,}1-20\lg(f)}{-20}}\right)$ [c]
F	$1 \le f \le 600$	$-20\lg\left(10^{\frac{91-20\lg(f)}{-20}}+4\times10^{\frac{87-15\lg(f)}{-20}}\right)$ [c]

[a] *PS ELFEXT* at frequencies that correspond to measured *FEXT* values of greater than 70,0 dB are for information only.

[b] *PS ELFEXT* at frequencies that correspond to calculated values of greater than 57,0 dB shall revert to a minimum requirement of 57,0 dB.

[c] *PS ELFEXT* at frequencies that correspond to calculated values of greater than 62,0 dB shall revert to a minimum requirement of 62,0 dB.

Table 15 – Informative PS ELFEXT values for channel at key frequencies

Frequency MHz	Minimum PS ELFEXT dB		
	Class D	Class E	Class F
1	54,4	60,3	62,0
16	30,3	36,2	54,5
100	14,4	20,3	41,4
250	N/A	12,3	34,8
600	N/A	N/A	28,3

6.4.7 Direct current (d.c.) loop resistance

The d.c. loop resistance of each pair of a channel shall meet the requirements in Table 16.

When required, the d.c. loop resistance shall be measured according to IEC 61935-1.

Table 16 – Direct current (d.c.) loop resistance for channel

Maximum d.c. loop resistance Ω					
Class A	Class B	Class C	Class D	Class E	Class F
560	170	40	25	25	25

Copyright International Organization for Standardization
Provided by IHS under license with ISO
No reproduction or networking permitted without license from IHS Not for Resale

6.4.8 Direct current (d.c.) resistance unbalance

The d.c. resistance unbalance between the two conductors within each pair of a channel shall not exceed 3 % for all classes. This shall be achieved by design.

6.4.9 Current carrying capacity

The minimum current carrying capacity for channels of Classes D, E and F shall be 0,175 A d.c. per conductor for all temperatures at which the cabling will be used. This shall be achieved by an appropriate design.

6.4.10 Operating voltage

The channels of classes D, E and F shall support an operating voltage of 72 V d.c. between any conductors for all temperatures at which the cabling is intended to be used.

6.4.11 Power capacity

The channels of classes D, E and F shall support the delivery of a power of 10 W per pair for all temperatures at which the cabling is intended to be used.

6.4.12 Propagation delay

The propagation delay of each pair of a channel shall meet the requirements derived by the equation in Table 17.

When required, the propagation delay shall be measured according to IEC 61935-1.

Table 17 – Propagation delay for channel

Class	Frequency MHz	Maximum propagation delay µs
A	$f = 0{,}1$	20,000
B	$0{,}1 \le f \le 1$	5,000
C	$1 \le f \le 16$	$0{,}534 + 0{,}036/\sqrt{f} + 4 \times 0{,}002\,5$
D	$1 \le f \le 100$	$0{,}534 + 0{,}036/\sqrt{f} + 4 \times 0{,}002\,5$
E	$1 \le f \le 250$	$0{,}534 + 0{,}036/\sqrt{f} + 4 \times 0{,}002\,5$
F	$1 \le f \le 600$	$0{,}534 + 0{,}036/\sqrt{f} + 4 \times 0{,}002\,5$

Copyright International Organization for Standardization
Provided by IHS under license with ISO
No reproduction or networking permitted without license from IHS Not for Resale

Table 18 – Informative propagation delay values for channel at key frequencies

Frequency MHz	Maximum propagation delay µs					
	Class A	Class B	Class C	Class D	Class E	Class F
0,1	20,000	5,000	N/A	N/A	N/A	N/A
1	N/A	5,000	0,580	0,580	0,580	0,580
16	N/A	N/A	0,553	0,553	0,553	0,553
100	N/A	N/A	N/A	0,548	0,548	0,548
250	N/A	N/A	N/A	N/A	0,546	0,546
600	N/A	N/A	N/A	N/A	N/A	0,545

6.4.13 Delay skew

The delay skew between all pairs of a channel shall meet the requirements in Table 19.

When required, the delay skew shall be measured according to IEC 61935-1.

Table 19 – Delay skew for channel

Class	Frequency MHz	Maximum delay skew µs
A	$f = 0{,}1$	N/A
B	$0{,}1 \leq f \leq 1$	N/A
C	$1 \leq f \leq 16$	0,050 [a]
D	$1 \leq f \leq 100$	0,050 [a]
E	$1 \leq f \leq 250$	0,050 [a]
F	$1 \leq f \leq 600$	0,030 [b]

[a] This is the result of the calculation 0,045 + 4 × 0,001 25.

[b] This is the result of the calculation 0,025 + 4 × 0,001 25.

6.4.14 Unbalance attenuation

The unbalance attenuation near end (longitudinal to differential conversion loss (*LCL*) or transverse conversion loss (*TCL*)) of a channel shall meet the requirements derived by the equation in Table 20.

The unbalance attenuation requirements shall be met at both ends of the cabling.

The unbalance attenuation performance shall be achieved by the appropriate choice of cables and connecting hardware.

Copyright International Organization for Standardization
Provided by IHS under license with ISO
No reproduction or networking permitted without license from IHS Not for Resale

Table 20 – Unbalance attenuation for channel

Class	Frequency MHz	Maximum unbalance attenuation dB
A	$f = 0{,}1$	30
B	$f = 0{,}1$ and 1	45 at 0,1 MHz; 20 at 1 MHz
C	$1 \le f \le 16$	$30 - 5\lg(f)$ f.f.s.
D	$1 \le f \le 100$	$40 - 10\lg(f)$ f.f.s.
E	$1 \le f \le 250$	$40 - 10\lg(f)$ f.f.s.
F	$1 \le f \le 600$	$40 - 10\lg(f)$ f.f.s.

6.4.15 Coupling attenuation

The measurement of coupling attenuation for installed cabling is under development. Coupling attenuation of a sample installation may be assessed by laboratory measurements of representative samples of channels assembled, using the components and connector termination practices in question.

7 Reference implementations for balanced cabling

7.1 General

This clause describes implementations of generic balanced cabling that utilise components and assemblies referenced in Clauses 9, 10 and 13. These reference implementations meet the requirements of Clause 5 and, when installed in accordance with ISO/IEC TR 14763-2, comply with the channel performance requirements of Clause 6.

7.2 Balanced cabling

7.2.1 General

Balanced components referenced in Clauses 9 and 10 are defined in terms of impedance and category. In the reference implementations of this clause, the components used in each cabling channel shall have the same nominal impedance, i.e. 100 Ω for Classes D to F and 100 Ω or 120 Ω for Class A to Class C.

The implementations are based on component performance at 20 °C. The effect of temperature on the performance of cables shall be accommodated by derating length as shown in Table 21 and Table 22.

Cables and connecting hardware of different categories may be mixed within a channel. However, the resultant cabling performance will be determined by the category of the lowest performing component.

7.2.2 Horizontal cabling

7.2.2.1 Component choice

The selection of balanced cabling components will be determined by the class of applications to be supported. Refer to Annex F for guidance.

--`,,```,,,,````-`-`,,`,,`,`,,`---

Copyright International Organization for Standardization
Provided by IHS under license with ISO
No reproduction or networking permitted without license from IHS Not for Resale

Using the configurations of 7.2.2.2:

- Category 5 components provide Class D balanced cabling performance;
- Category 6 components provide Class E balanced cabling performance;
- Category 7 components provide Class F balanced cabling performance.

NOTE For the relationship and requirements of classes and categories in earlier editions of this standard, see Annex I.

7.2.2.2 Dimensions

Figure 12 shows the models used to correlate horizontal cabling dimensions specified in this clause with the channel specifications in Clause 6.

Copyright International Organization for Standardization
Provided by IHS under license with ISO
No reproduction or networking permitted without license from IHS Not for Resale

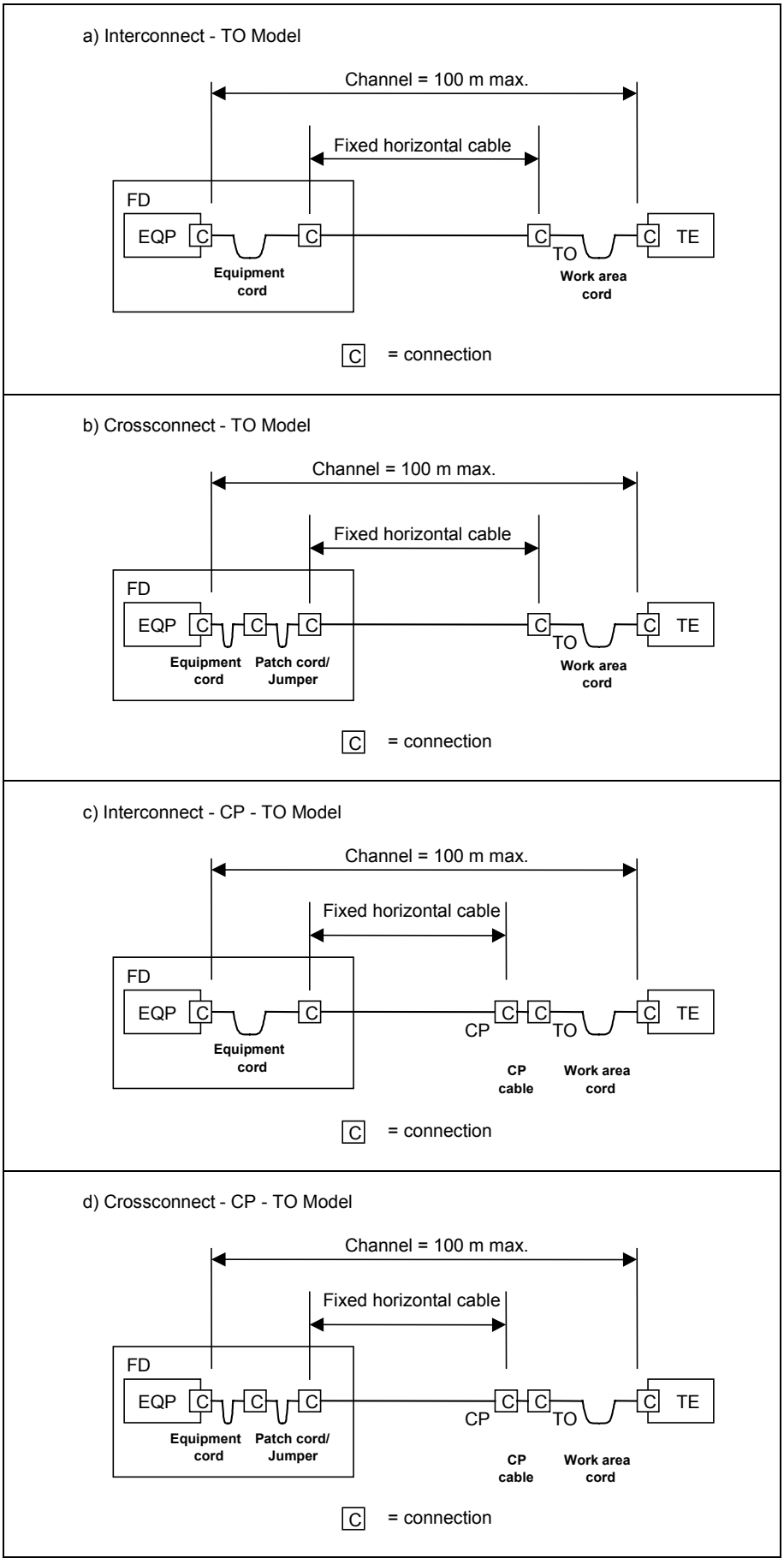

Figure 12 – Horizontal cabling models

Copyright International Organization for Standardization
Provided by IHS under license with ISO
No reproduction or networking permitted without license from IHS
Not for Resale

Figure 12a shows a channel containing only an interconnect and a TO. Figure 12b contains an additional connection as a cross-connect. In both cases the fixed horizontal cable connects the FD to the TO or MUTO. The channel includes cords comprising patch cords/jumpers, equipment and work area cords.

Figure 12c shows a channel containing an interconnect, a CP and a telecommunications outlet. Figure 12d contains an additional connection as a cross-connect. In both cases the fixed horizontal cable connects the FD to the CP. The channel includes cords comprising patch cords/jumpers, equipment and work area cords.

In addition to the cords, the channels shown in Figure 12c and Figure 12d contain a CP cable. The insertion loss specification for the CP cable may differ from that of both the fixed horizontal cable and the cords. In order to accommodate cables used for work area cords, CP cables, patch cords, jumpers and equipment cords with different insertion loss, the length of the cables used within a channel shall be determined by the equations shown in Table 21.

Table 21 – Horizontal link length equations

		Implementation Equation		
Model	**Figure**	**Class D channels using Category 5 components**	**Class E channels using Category 6 components**	**Class F channels using Category 7 components**
Interconnect - TO	12a	$H = 109 - FX$	$H = 107 - 3^{a} - FX$	$H = 107 - 2^{a} - FX$
Cross-connect - TO	12b	$H = 107 - FX$	$H = 106 - 3^{a} - FX$	$H = 106 - 3^{a} - FX$
Interconnect - CP -TO	12c	$H = 107 - FX - CY$	$H = 106 - 3^{a} - FX - CY$	$H = 106 - 3^{a} - FX - CY$
Cross-connect - CP - TO	12d	$H = 105 - FX - CY$	$H = 105 - 3^{a} - FX - CY$	$H = 105 - 3^{a} - FX - CY$

H the maximum length of the fixed horizontal cable (m)

F combined length of patch cords/jumpers, equipment and work area cords (m)

C the length of the CP cable (m)

X the ratio of cord cable insertion loss (dB/m) to fixed horizontal cable insertion loss (dB/m) – see Clause 9

Y the ratio of CP cable insertion loss (dB/m) to fixed horizontal cable insertion loss (dB/m) – see Clause 9

NOTE For operating temperatures above 20 °C, H should be reduced by 0,2 % per °C for screened cables; 0,4 % per °C (20 °C to 40 °C) and 0,6 % per °C (>40 °C to 60 °C) for unscreened cables.

[a] This length reduction is to provide an allocated margin to accommodate insertion loss deviation.

For the purpose of calculation in Table 21 it is assumed that:

- the flexible cable within these cords has a higher insertion loss than that used in the fixed horizontal cable (see Clause 9);
- all the cords in the channel have a common insertion loss specification.

The following general restrictions apply:

- the physical length of the channel shall not exceed 100 m;
- the physical length of the fixed horizontal cable shall not exceed 90 m. When the total length of patch, equipment and work area cords exceeds 10 m, the allowed physical length of the fixed horizontal cable shall be reduced according to Table 21;
- a consolidation point shall be located so that there is at least 15 m from it to the floor distributor;
- where a multi-user TO assembly is used, the length of the work area cord should not exceed 20 m;
- the length of patch cords/jumper cables should not exceed 5 m.

--`,,```,,,,````-`-`,,`,,`,`,,`---

Copyright International Organization for Standardization
Provided by IHS under license with ISO
No reproduction or networking permitted without license from IHS Not for Resale

The maximum length of the fixed horizontal cable will depend on the total length of cords to be supported within a channel. During the operation of the installed cabling, a management system should be implemented to ensure that the cords, jumper cables and, where appropriate, the CP cables used to create the channel conform to the design rules for the floor, building or installation.

7.2.3 Backbone cabling

7.2.3.1 Component choice

The selection of balanced components will be determined by the channel lengths required and the class of applications to be supported. Refer to Annex F for guidance.

7.2.3.2 Dimensions

Figure 13 shows the model used to correlate cabling dimensions specified in this clause with the channel specifications in Clause 6. The backbone channel shown (either building or campus) contains a cross-connect at each end. This represents the maximum configuration for a Class D, E or F backbone channel.

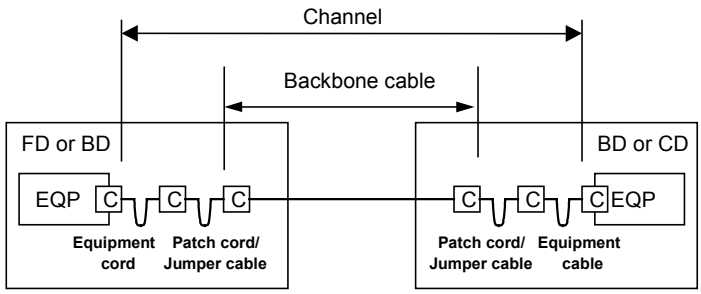

EQP = equipment; C = connection (mated pair)

Figure 13 – Backbone cabling model

The channel includes additional cords comprising patch cords/jumpers and equipment cords.

In Table 22 it is assumed that:

- the flexible cable within these cords may have a higher insertion loss than that used in the backbone cable;
- all the cords in the channel have a common insertion loss specification.

In order to accommodate the higher insertion loss of cables used for patch cords, jumpers and equipment cords, the length of the cables used within a channel of a given class (see 5.7.9) shall be determined by the equations shown in Table 22.

The following general restrictions apply for Classes D, E and F:

- the physical length of channels shall not exceed 100 m;
- when 4 connections are used in a channel, the physical length of the backbone cable should be at least 15 m.

The maximum length of the backbone cable will depend on the total length of cords to be supported within a channel. The maximum lengths of cords shall be set during the design phase and a management system is required to ensure that these lengths are not exceeded during the operation of the cabling system.

Copyright International Organization for Standardization
Provided by IHS under license with ISO
No reproduction or networking permitted without license from IHS Not for Resale

Table 22 – Backbone link length equations

	Class					
Component Category	**A see [a]**	**B see [a]**	**C see [a]**	**D see [a]**	**E see [a]**	**F see [a]**
5	2 000	$B = 250 - FX$	$B = 170 - FX$	$B = 105 - FX$	–	–
6	2 000	$B = 260 - FX$	$B = 185 - FX$	$B = 111 - FX$	$B = 105 - 3$ [b] $- FX$	–
7	2 000	$B = 260 - FX$	$B = 190 - FX$	$B = 115 - FX$	$B = 107 - 3$ [b] $- FX$	$B = 105 - 3$ [b] $- FX$

B the maximum length of the backbone cable (m)

F combined length of patch cords/jumpers and equipment cords (m)

X the ratio of cord cable insertion loss (dB/m) to backbone cable insertion loss (dB/m) – see Clause 9

NOTE 1 Where channels contain a different number of connections than in the model shown in Figure 13, the fixed cable length shall be reduced (where more connections exist) or may be increased (where fewer connections exist) by 2 m per connection for category 5 cables and 1 m per connection for Category 6 and 7 cables. Additionally, the *NEXT*, Return Loss (*RL*) and *ELFEXT* performance should be verified.

NOTE 2 For operating temperatures above 20 °C, *B* should be reduced by 0,2 % per °C for screened cables; 0,4 % per °C (20 °C to 40 °C) and 0,6 % per °C (>40 °C to 60 °C) for unscreened cables.

[a] Applications limited by propagation delay or skew may not be supported if channel lengths exceed 100 m.

[b] This length reduction is to provide an allocated margin to accommodate insertion loss deviation.

8 Performance of optical fibre cabling

8.1 General

The selection of an optical fibre channel design for use within a generic cabling system should be made with reference to Annex F. This standard specifies the following classes for optical fibre cabling:

Class OF-300 channels support applications over the optical fibre types referenced in Clause 9 to a minimum of 300 m

Class OF-500 channels support applications over the optical fibre types referenced in Clause 9 to a minimum of 500 m

Class OF-2 000 channels support applications over the optical fibre types referenced in Clause 9 to a minimum of 2 000 m

Optical fibre channels shall be comprised of components that comply with Clauses 9 and 10. These clauses specify physical construction (core/cladding diameter and numerical aperture) and transmission performance. Within the reference implementations of this clause, the optical fibres used in each cabling channel shall have the same specification.

8.2 Component choice

The required channel lengths, applications to be supported and the life expectancy of the cabling will determine the selection of optical fibre components. The performance requirements for optical fibre channels are based on the use of a single optical wavelength in each specified transmission window.

The requirements for the wavelength multiplexing and demultiplexing components will be found in the application standards. There are no special requirements for generic cabling concerning wavelength multiplexing.

--`,,```,,,,````-`-`,,`,,`,`,,`---

Copyright International Organization for Standardization
Provided by IHS under license with ISO
No reproduction or networking permitted without license from IHS Not for Resale

8.3 Channel attenuation

The channel attenuation shall not exceed the values shown in Table 23. The values are based on a total allocation of 1,5 dB for connecting hardware. Additional connectors and splices may be used if the power budget of the application allows. The attenuation of a channel shall be measured according to ISO/IEC TR 14763-3. The attenuation of channels and permanent links at a specified wavelength shall not exceed the sum of the specified attenuation values for the components at that wavelength (where the attenuation of a length of optical fibre cable is calculated from its attenuation coefficient multiplied by its length).

Table 23 – Channel attenuation

Channel attenuation dB				
Channel	**Multimode**		**Single-mode**	
	850 nm	**1 300 nm**	**1 310 nm**	**1 550 nm**
OF-300	2,55	1,95	1,80	1,80
OF-500	3,25	2,25	2,00	2,00
OF-2 000	8,50	4,50	3,50	3,50

8.4 Channel topology

The models of Figure 13 and Figure 14 are applicable to horizontal and backbone optical fibre cabling respectively. It should be noted that the connection system, used to terminate optical cabling, may contain mated connecting hardware and splices (permanent or re-useable) and that cross-connects may comprise re-useable splices.

The delivery of optical fibre to the TO would not generally require transmission equipment at the FD (unless the design of optical fibre in the backbone cabling subsystem differs from that in the horizontal cabling subsystem). This allows the creation of a combined backbone/horizontal channel as shown in Figure 14. The three diagrams show a patched channel, a spliced channel and a direct channel (which does not require the use of a FD). Patched and spliced channel designs are also applicable to combined campus/building backbone channels and it is possible to consider a combined campus/building/horizontal channel.

The use of permanently spliced and direct channels may be used as a means of reducing channel attenuation and centralising the distribution of applications. However, centralising the distribution may also result in a reduction in the overall flexibility in generic cabling.

--`,,```,,,,````-`-`,,`,,`,`,,`---

Copyright International Organization for Standardization
Provided by IHS under license with ISO
No reproduction or networking permitted without license from IHS Not for Resale

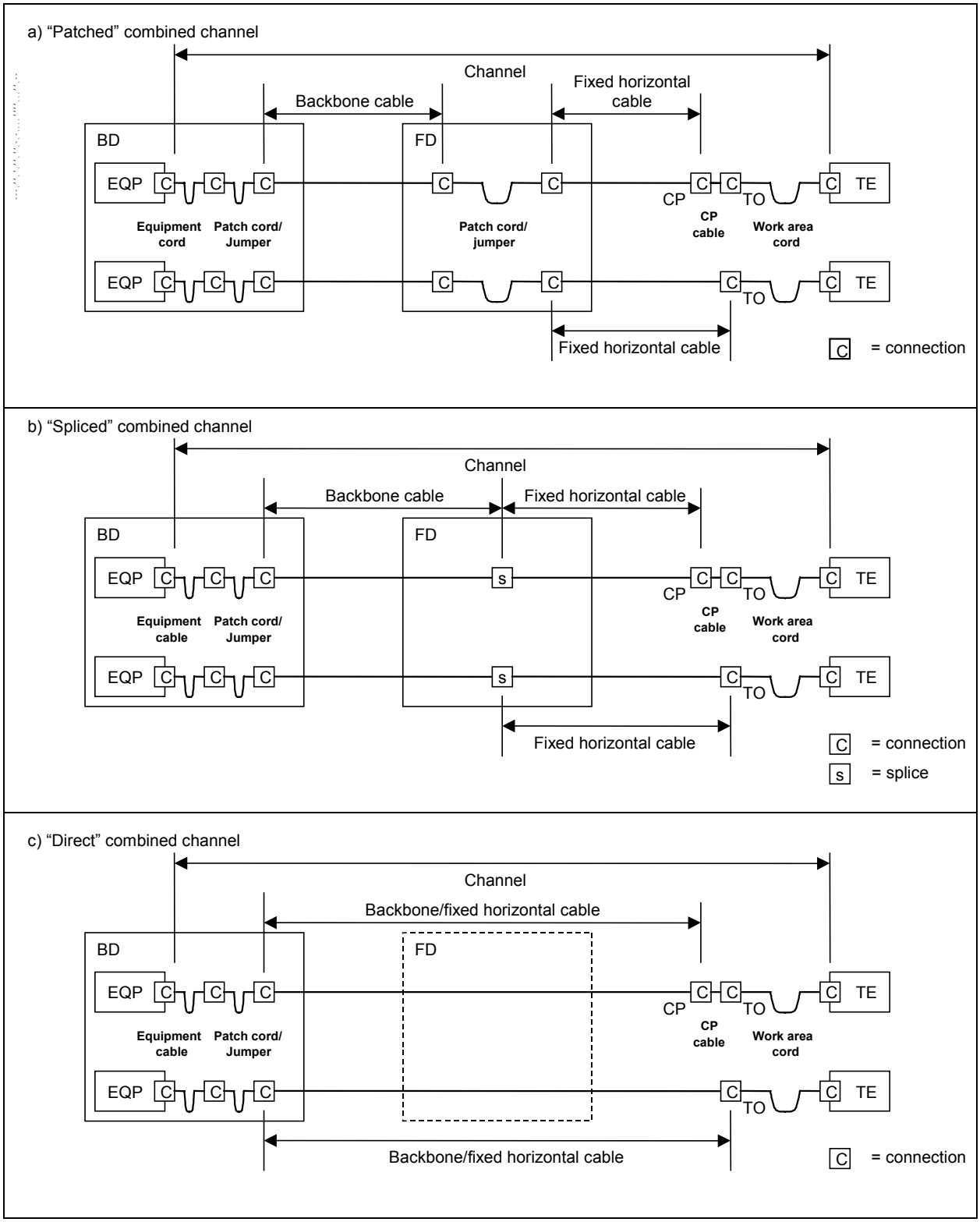

Figure 14 – Combined backbone/horizontal channels

In order to accommodate increased quantities of mated connections and splices used within a channel of a given class, the total length of the channel may have to be reduced to accommodate the additional attenuation.

Copyright International Organization for Standardization
Provided by IHS under license with ISO
No reproduction or networking permitted without license from IHS
Not for Resale

8.5 Propagation delay

For some applications, knowledge of the delay of optical fibre channels is important. This ensures compliance with end-to-end delay requirements of complex networks consisting of multiple cascaded channels. For this reason, it is important to know the lengths of the optical fibre channels. It is possible to calculate propagation delay based on cable performance (see Clause 9).

9 Cable requirements

9.1 General

This clause specifies the minimum cable performance requirements for the reference implementations in Clause 7. The requirements of the current clause apply to a reference temperature of 20 °C. They include:

a) cables installed in the horizontal and backbone cabling subsystems specified in Clause 5 and used in the reference implementations of Clause 7 for balanced cabling and Clause 8 for optical fibre cabling;

b) balanced cables or cable elements to be used as jumpers;

c) balanced cables to be assembled as cords as specified in Clause 13 and used in the reference implementations of Clause 7.

Balanced cables shall be tested according to generic specification IEC 61156-1 and shall meet the requirements of 9.2.

Optical fibre cables shall meet the requirements of those parts of IEC 60794 that specify the relevant test methods and cable characteristics and that are referenced in 9.4.

9.2 Balanced cables

9.2.1 Basic performance requirements

Both mechanical and electrical requirements are given in the generic specification IEC 61156-1 and the relevant sectional specifications and cover the minimum requirements to meet the performance classes specified in Clause 6 using the reference implementation of 7.2. The cables shall meet the requirements of Table 24. The Category 5 of this standard corresponds to the category 5e of the standards referenced in Table 24, if, in addition, the requirements of 9.2.2 are met.

Table 24 – Basic requirements of balanced cables

IEC 61156-2 (2001)	Sectional specification for multicore and symmetrical pair/quad cables for digital communications – Horizontal wiring
IEC 61156-3 (2001)	Sectional specification for multicore and symmetrical pair/quad cables for digital communications – Work area wiring
IEC 61156-4 (2001)	Sectional specification for multicore and symmetrical pair/quad cables for digital communications – Riser cables
IEC 61156-5 (2002)	Symmetrical pair/quad cables for digital communications with transmission characteristics up to 600 MHz – Part 5: Horizontal wiring
IEC 61156-6 (2002)	Symmetrical pair/quad cables for digital communications with transmission characteristics up to 600 MHz – Part 6: Work area wiring
NOTE The pair-to-pair NEXT of category 6 is 1 dB more restrictive than needed to fulfil Clause 6 using the reference implementation of Clause 7.	

Copyright International Organization for Standardization
Provided by IHS under license with ISO
No reproduction or networking permitted without license from IHS Not for Resale

9.2.2 Additional requirements

9.2.2.1 General

The additional mechanical and electrical requirements given in this subclause shall be met. Measurements shall be performed according to IEC 61156-1. In case of conflict with referenced standards, the limits in this standard apply.

9.2.2.2 Mechanical characteristics of balanced cables

Table 25 – Mechanical characteristics of balanced cables

Cable characteristics		Units	Requirements
1.1	Diameter of conductor[a]	mm	0,4 to 0,8
1.2	Diameter over-insulated conductor[b]	mm	≤1,6
1.3	Outer diameter of backbone cable[c]	mm	≤90
1.4	Temperature range without mechanical or electrical degradation	°C	installation: 0 to +50 operation: –20 to +60
1.5	Minimum bending radius (after installation)[d]	25 mm for four-pair cables with a diameter up to 6 mm 50 mm for four-pair cables with a diameter over 6 mm	

[a] Conductor diameters below 0,5 mm and above 0,65 mm may not be compatible with all connecting hardware.
[b] Diameters over the insulated conductor up to 1,7 mm may be used if they meet all other performance requirements. These cables may not be compatible with all connecting hardware.
[c] Should be minimised to make best use of duct and cross-connect capacity (see Clause 10).
[d] For minimum bending radius requirements during installation refer to manufacturer's recommendations.

9.2.2.3 Mean characteristic impedance

Refer to 3.3.6.2 of IEC 61156-5 measured according to 3.3.6.2.3 method A of IEC 61156-1 on a standard length of 100 m. The nominal impedance shall be 100 Ω.

Alternate test methodologies that have been shown to correlate with these requirements may also be used.

9.2.2.4 Attenuation

For the attenuation of Category 5 cable the constants specified in 3.3.2.2 of IEC 61156-5 shall be used. They result in a lower attenuation than given in table 4 of 3.3.2.1 of IEC 61156-5, for example in 21,3 dB/100 m at 100 MHz.

Calculations that result in attenuation below 4 dB shall revert to a requirement of 4 dB.

9.2.2.5 ELFEXT and PS ELFEXT

Refer to 3.3.5 of IEC 61156-5 with the additional requirement, that *ELFEXT* and *PS ELFEXT* shall be met from 1 MHz up to the highest specified frequency.

If *FEXT* is greater than 70 dB, *ELFEXT* and *PS ELFEXT* need not be measured.

9.2.2.6 Current carrying capacity

Minimum d.c. current carrying capacity per conductor shall be 175 mA.

This shall be supported at a maximum ambient temperature of 60 °C; conformance shall be achieved by design. An IEC test reference is under development.

--`,,```,,,,````-`-`,,`,,`,`,,`---

Copyright International Organization for Standardization
Provided by IHS under license with ISO
No reproduction or networking permitted without license from IHS Not for Resale

9.2.2.7 Coupling attenuation

Refer to 3.3.9 of IEC 61156-5 with the additional requirement, that for screened cables type II shall be met.

9.2.2.8 Transfer impedance

Screened cables shall meet the requirements of grade 2 in table 2 of IEC 61156-5.

9.2.3 Additional performance requirements for flexible cables

This clause covers additional requirements for cables used for patch cords, for work area and for equipment cords for use with balanced cabling. The electrical performance of these cables shall meet the general requirements for balanced cables as specified in 9.2.2 for the respective category with exception of attenuation, d.c. loop resistance and return loss (*RL*), which are specified in this subclause.

The attenuation in dB/100 m and d.c. loop resistance shall not be more than 50 % higher than specified in 9.2.2. Consider 7.2 for additional length restrictions.

NOTE Return loss (*RL*) shall be measured on a test length of 100 m. Alternate test methodologies that have been shown to correlate with these requirements may also be used.

9.3 Additional crosstalk considerations for cable sharing in balanced cables

9.3.1 General

This subclause covers cabling system implementations that may lead to the presence of multiple signals on the same cable.

Backbone cables required to support multiple signals shall meet the requirements of 9.3.2.

In the horizontal cabling subsystem, when multiple telecommunications outlets are served by a single cable, the near-end crosstalk of cable elements that extend to any two or more outlets shall meet the requirements of 9.3.3. The requirements of 9.3.3 also apply between units of hybrid and multi-unit cables used in either the horizontal or backbone subsystems.

9.3.2 Power summation in backbone cables

Examples of the types of cables covered by this clause include cables with two or more elements within a cable unit that are used for backbone subsystems. Cables according to the requirements of this clause shall meet the respective requirements of 9.2. These cables shall additionally meet the *PS NEXT* requirements for crosstalk in bundled cable, i.e. 3.3.10 of IEC 61156-5.

NOTE 1 The specification in IEC 61156-5:2002 is more demanding by 2 dB than the original ISO/IEC requirement.

NOTE 2 PS NEXT takes the total crosstalk power into account. Therefore a higher count of adjacent pairs requires a higher pair-pair NEXT to achieve the same PS NEXT.

9.3.3 Hybrid, multi-unit and cables connected to more than one TO

Examples of the types of cables that are covered by this clause include hybrid cables and multi-unit cables and any cable connected to more than one TO. The units may be of the same type or of different types, and of the same category or of different categories. Cables required to meet this clause shall also meet the requirements for the corresponding cable type given in 9.2.

Copyright International Organization for Standardization
Provided by IHS under license with ISO
No reproduction or networking permitted without license from IHS Not for Resale

For cables required to meet this clause, *PS NEXT* between any balanced cable unit or element shall meet the requirements specified in 3.3.10.1 of IEC 61156-5:2002.

NOTE 1 The above requirement is intended to minimise the potential for sheath sharing incompatibilities. Cables that meet the power summation requirement for *NEXT* may not support services with different signalling schemes. The use of different applications, supported by metallic cabling, with a maximum power budget exceeding 3 dB is not assured within a common sheath.

NOTE 2 The *PS NEXT* of cat. 6 is 1 dB more restrictive than needed to fulfil Clause 6 using the reference implementation of Clause 7.

9.4 Optical fibre cables

9.4.1 Optical fibre types

Four types of optical fibre are specified to support various classes of applications, three multimode optical fibre types (OM1, OM2, and OM3) and one single-mode type (OS1).

9.4.2 Generic performance requirements

9.4.2.1 Optical fibre cable attenuation

Table 26 – Optical fibre cable attenuation

Maximum cable attenuation dB/km				
	OM1, OM2, and OM3 Multimode		**OS1 Single-mode**	
Wavelength	850 nm	1 300 nm	1 310 nm	1 550 nm
Attenuation	3,5	1,5	1,0	1,0

9.4.2.2 Propagation delay

A conservative conversion value for unit propagation delay of 5,00 ns/m (0,667 c) may be used. This value can be used to calculate channel delay without verification (see Clause 8).

9.4.3 Multimode optical fibre cable

The three parts to the requirement for multimode optical fibre cables are the optical fibre requirements, the cable transmission performance requirements and the physical cable requirements.

a) Optical fibre requirements

The optical fibre shall be multimode, graded-index optical fibre waveguide with nominal 50/125 µm or 62,5/125 µm core/cladding diameter and numerical aperture complying with A1a or A1b optical fibre as defined in IEC 60793-2-10.

b) Cable transmission performance requirements

Each optical fibre in the cable shall meet the performance requirements of Table 26 and Table 27. Attenuation and modal bandwidth shall be measured in accordance with IEC 60793-1-40 and IEC 60793-1-41 respectively.

c) Physical cable requirements

The indoor and outdoor optical fibre cable shall meet mechanical and environmental requirements specified in IEC 60794-2 and IEC 60794-3 respectively.

Copyright International Organization for Standardization
Provided by IHS under license with ISO
No reproduction or networking permitted without license from IHS Not for Resale

Table 27 – Multimode optical fibre modal bandwidth

		Minimum modal bandwidth MHz × km		
		Overfilled launch bandwidth		Effective laser launch bandwidth
Wavelength		850 nm	1 300 nm	850 nm
Optical fibre type	Core diameter μm			
OM1	50 or 62,5	200	500	Not specified
OM2	50 or 62,5	500	500	Not specified
OM3	50	1 500	500	2 000
NOTE Effective laser launch bandwidth is assured using differential mode delay (DMD) as specified in IEC/PAS 60793-1-49. Optical fibres that meet only the overfilled launch modal bandwidth may not support some applications specified in Annex F.				

9.4.4 Single-mode optical fibre cables

The three parts to the requirement for single-mode optical fibre cables are the optical fibre requirements, the cable transmission performance and the physical cable requirements.

a) Optical fibre requirements

the optical fibre shall comply with IEC 60793-2-50 type B1 and ITU-T G.652.

b) Cable transmission performance requirement

1) Attenuation

each single-mode optical fibre in the cable shall have an attenuation in accordance with Table 26. Attenuation shall be measured in accordance with IEC 60793-1-40.

2) Cut-off wavelength

the cut-off wavelength of cabled single-mode optical fibre shall be less than 1 260 nm when measured in accordance with IEC 60793-1-44.

c) Physical cable requirements

the indoor and outdoor optical fibre cable shall meet mechanical and environmental requirements from IEC 60794-2 and IEC 60794-3 respectively.

10 Connecting hardware requirements

10.1 General requirements

10.1.1 Applicability

This clause provides guidelines and requirements for connecting hardware used in generic cabling. For the purpose of this clause, a connector is a component normally attached to a cable or mounted on a piece of apparatus (excluding an adapter) for joining separable parts of a cabling system. Unless otherwise specified, this standard specifies the minimum performance of mated connectors as part of a link or channel. The requirements used in this clause apply to mated connections. The requirements of the detail specifications for plugs and sockets referenced in this clause shall also be met.

These requirements apply to individual connectors which include telecommunications outlets, patch panels, consolidation point connectors, splices and cross-connects. All requirements for these components are applicable for the temperature range of –10 °C to +60 °C. Performance requirements do not include the effects of cross-connect jumpers or patch cords. Requirements for balanced cords are provided in Clause 13.

Copyright International Organization for Standardization
Provided by IHS under license with ISO
No reproduction or networking permitted without license from IHS Not for Resale

NOTE This clause does not address requirements for devices with passive or active electronic circuitry, including those whose main purpose is to serve a specific application or to provide compliance with other rules and regulations. Examples include media adapters, impedance matching transformers, terminating resistors, LAN equipment, filters and protection apparatus. Such devices are considered to be outside the scope of generic cabling and may have significant detrimental effects on network performance. Therefore, it is important that their compatibility with the cabling system and equipment be considered before use.

10.1.2 Location

Connecting hardware is installed:

a) in a campus distributor permitting connections to building backbone and campus backbone cabling and equipment (if provided);

b) in a building distributor permitting connections to the backbone cabling and equipment (if provided);

c) in a floor distributor providing the cross-connections between backbone and horizontal cabling and permitting connections to equipment (if provided);

d) at the horizontal cabling consolidation point (if provided);

e) at the telecommunications outlet;

f) in the building entrance facility.

10.1.3 Design

In addition to its primary purpose, connecting hardware should be designed to provide

a) a means to identify cabling for installation and administration as described in Clause 12,

b) a means to permit orderly cable management,

c) a means of access to monitor or test cabling and equipment,

d) protection against physical damage and ingress of contaminants,

e) a termination density that is space efficient, but that also provides ease of cable management and ongoing administration of the cabling system,

f) a means to accommodate screening and bonding requirements, when applicable.

10.1.4 Operating environment

Performance of the connecting hardware shall be maintained over temperatures ranging from –10 °C to +60 °C. Connecting hardware should be protected from physical damage and from direct exposure to moisture and other corrosive elements. This protection may be accomplished by installation indoors or in an appropriate enclosure for the environment according to the relevant IEC standard.

10.1.5 Mounting

Connecting hardware should be designed to provide flexibility for mounting, either directly or by means of an adapter plate or enclosure. (For example, connecting hardware should have mounting provisions for placement on walls, in walls, in racks, or on other types of distribution frames and mounting fixtures.)

10.1.6 Installation practices

The manner and care with which the cabling is implemented are significant factors in the performance and ease of administration of installed cabling systems. Installation and cable management precautions should include the elimination of cable stress as caused by tension, sharp bends and tightly bunched cables.

Copyright International Organization for Standardization
Provided by IHS under license with ISO
No reproduction or networking permitted without license from IHS Not for Resale

The connecting hardware shall be installed to permit

a) minimal signal impairment and maximum screen effectiveness (where screened cabling is used) by proper cable preparation, termination practices (in accordance with manufacturer's guidelines) and well organised cable management,

b) room for mounting telecommunications equipment associated with the cabling system. Racks should have adequate clearances for access and cable dressing space.

The connecting hardware shall be identified according to the requirements of ISO/IEC 14763-1. Planning and installation of connecting hardware should be carried out in accordance with ISO/IEC TR 14763-2.

NOTE 1 See ISO/IEC 18010 for information on pathways and spaces for customer premises cabling.

NOTE 2 Some connections are used to perform a crossover function between two elements to properly configure cabling links for transmit and receive connections.

NOTE 3 Improper termination of any balanced cable element or screen may degrade transmission performance, increase emissions and reduce immunity.

10.1.7 Marking and colour coding

In order to maintain consistent and correct point-to-point connections, provisions shall be made to ensure that terminations are properly located with respect to connector positions and their corresponding cable elements. Such provisions may include the use of colours, alphanumeric identifiers or other means designed to ensure that cables are connected in a consistent manner throughout the system.

When two physically similar cabling types are used in the same subsystem, they shall be marked in such a way as to allow each cabling type to be clearly identified. For example, different performance categories, different nominal impedance and different optical fibre core diameters should carry unique markings or colours to facilitate visual identification.

10.2 Connecting hardware for balanced cabling

10.2.1 General requirements

The following requirements apply to all connecting hardware used to provide electrical connections with balanced cables that comply with the requirements of Clause 9. It is desirable that hardware used to directly terminate balanced cable elements be of the insulation displacement connection (IDC) type. In addition to these requirements, connecting hardware used with screened cabling shall be in full compliance with Clause 11.

10.2.2 Performance marking

Connecting hardware intended for use with balanced cabling should be marked to designate transmission performance at the discretion of the manufacturer. The markings, if any, shall be visible during installation and do not replace other markings specified in 10.1.7, or in Clause 12, or those required by local codes or regulations.

10.2.3 Mechanical characteristics

Connecting hardware intended for use with balanced cabling shall meet the requirements specified in Table 28.

Copyright International Organization for Standardization
Provided by IHS under license with ISO
No reproduction or networking permitted without license from IHS Not for Resale

Table 28 – Mechanical characteristics of connecting hardware for use with balanced cabling

Mechanical characteristics			Requirement	Component or test standard
a)	Physical dimensions (only at telecommunications outlet)	Category 5 unscreened	Mating dimensions and gauging	IEC 60603-7-2 [i]
		Category 5 screened	Mating dimensions and gauging	IEC 60603-7-3 [k]
		Category 6 unscreened	Mating dimensions and gauging	IEC 60603-7-4 [m]
		Category 6 screened	Mating dimensions and gauging	IEC 60603-7-5 [n]
		Category 7	Mating dimensions and gauging	IEC 60603-7-7 [o]
b)	Cable termination compatibility			
	Nominal conductor diameter – mm		0,5 to 0,65 [a]	–
	Cable type	Patching [d]	Stranded conductors	–
		Jumpers	Stranded or solid conductors	–
		Other	Solid conductors	–
	Nominal diameter of insulated conductor mm	Categories 5 and 6	0,7 to 1,4 [b, c]	–
		Category 7	0,7 to 1,6	
	Number of conductors	Telecommunications outlet	8	Visual inspection
		Other	$\geq 2 \times n$ (n = 1, 2, 3, ...)	
	Cable outer diameter mm	Outlet	≤20	–
		Plug	≤9 [e]	
	Means to connect screen [f]		Mechanical and environmental performance	Annex C and Clause 11
c)	Mechanical operation (durability)			
	Cable termination (cycles)	Non-reusable IDC	1	IEC 60352-3 or IEC 60352-4
		Reusable IDC	≥20	IEC 60352-3 or IEC 60352-4
		Non-reusable IPC	1	IEC 60352-6
	Jumper termination (cycles)		≥200 [g]	IEC 60352-3 or IEC 60352-4
	TO-type interface (cycles)		≥750 [h]	IEC 60603-7 (unscreened) or IEC 60603-7-1 screened
	Other connections		≥200 [h]	Annex C

[a] It is not required that connecting hardware be compatible with cables outside of this range. However, when cables with conductor diameters as low as 0,4 mm or as high as 0,8 mm are used, special care shall be taken to ensure compatibility with connecting hardware to which they connect.

[b] Use of the modular plug connector specified in series IEC 60603-7 is typically limited to cables having insulated conductor diameters in the range of 0,8 mm to 1,0 mm.

[c] It is not required that connecting hardware be compatible with cables outside of this range. However, when cables with insulated conductor diameters as high as 1,6 mm are used, special care shall be taken to ensure compatibility with connecting hardware to which they connect.

[d] Connectors used in work area cords and equipment cords shall also be compatible with stranded conductors.

[e] Applicable only to individual cable units.

[f] If it is intended to use screened cabling, care should be taken that the connector is designed to terminate the screen. There may be a difference between connectors designed to terminate balanced cables with overall screens only, as opposed to cables having both individually screened elements and an overall screen (see Annex E).

[g] This durability requirement is only applicable to connections designed to administer cabling system changes (i.e., at a distributor).

[h] Mating and unmating under load is f.f.s.

[i] At the time of publication IEC 60603-7-2 (Connectors for electronic equipment – Part 7-2: Detail specification for 8-way, unshielded, free and fixed connectors, for data transmissions with frequencies up to 100 MHz) was not available. Until this specification is available compliance to requirements that refer to IEC 60603-7-2 may be attained by full compliance with IEC 60603-7, combined with all applicable requirements of Clause 10 of this standard.

[k] At the time of publication IEC 60603-7-3 (Connectors for electronic equipment – Part 7-3: Detail specification for 8-way, shielded, free and fixed connectors, for data transmissions with frequencies up to 100 MHz) was not available. Until this specification is available compliance to requirements that refer to IEC 60603-7-3 may be attained by full compliance with IEC 60603-7-1, combined with all applicable requirements of Clause 10 of this standard.

[m] At the time of publication IEC 60603-7-4 (Connectors for electronic equipment – Part 7-4: Detail specification for 8-way, unshielded, free and fixed connectors, for data transmissions with frequencies up to 250 MHz) was not available. Until this specification is available compliance to requirements that refer to IEC 60603-7-4 may be attained by full compliance with IEC 60603-7, combined with all applicable requirements of Clause 10 of this standard.

Copyright International Organization for Standardization
Provided by IHS under license with ISO
No reproduction or networking permitted without license from IHS Not for Resale

[n] At the time of publication IEC 60603-7-5 (Connectors for electronic equipment – Part 7-5: Detail specification for 8-way, shielded, free and fixed connectors, for data transmissions with frequencies up to 250 MHz) was not available. Until this specification is available compliance to requirements that refer to IEC 60603-7-5 may be attained by full compliance with IEC 60603-7-1, combined with all applicable requirements of Clause 10 of this standard.

[o] In installations where other factors, such as HEM (see ISO/IEC 15018) applications, take preference over backward compatibility offered with IEC 60603-7-7, the interface specified in IEC/PAS 61076-3-104/Ed.1 may also be used.

10.2.4 Electrical characteristics

10.2.4.1 General

Connecting hardware intended for use with balanced cabling shall meet the following performance requirements. Connecting hardware shall be tested with terminations and test leads that match the nominal characteristic impedance of the type of cables (i.e., 100 Ω or 120 Ω) they are intended to support.

In the following tables, requirements are provided for a range of frequencies. Performance values at discrete frequencies are provided for reference only.

10.2.4.2 Telecommunications outlets

Telecommunications outlets of a given category shall meet the corresponding performance requirements provided in Table 29. In addition, connectors in all other locations having the same type of interface as the telecommunications outlet shall also comply with one or more of the standards specified in Table 29 with pair groupings as specified in 0. Requirements of 10.2.4.3 shall be met for all TOs.

Copyright International Organization for Standardization
Provided by IHS under license with ISO
No reproduction or networking permitted without license from IHS Not for Resale

Table 29 – Electrical characteristics of telecommunications outlets intended for use with balanced cabling

Electrical characteristics of the telecommunications outlet [a]		Requirement	Component or test standard
Interface type	Frequency range MHz		
Category 5 unscreened	d.c., 1 to 100	All	IEC 60603-7-2 [b]
Category 5 screened	d.c., 1 to 100	All	IEC 60603-7-3 [c]
Category 6 unscreened	d.c., 1 to 250	All	IEC 60603-7-4 [d]
Category 6 screened	d.c., 1 to 250	All	IEC 60603-7-5 [e]
Category 7	d.c., 1 to 600	All	IEC 60603-7-7 [f]

[a] Mating and unmating under load is f.f.s.

[b] At the time of publication IEC 60603-7-2 (Connectors for electronic equipment – Part 7-2: Detail specification for 8-way, unshielded, free and fixed connectors, for data transmissions with frequencies up to 100 MHz) was not available. Until this specification is available compliance to requirements that refer to IEC 60603-7-2 may be attained by full compliance with IEC 60603-7, combined with all applicable requirements of Clause 10 of this standard.

[c] At the time of publication IEC 60603-7-3 (Connectors for electronic equipment – Part 7-3: Detail specification for 8-way, shielded, free and fixed connectors, for data transmissions with frequencies up to 100 MHz) was not available. Until this specification is available compliance to requirements that refer to IEC 60603-7-3 may be attained by full compliance with IEC 60603-7-1, combined with all applicable requirements of Clause 10 of this standard.

[d] At the time of publication IEC 60603-7-4 (Connectors for electronic equipment – Part 7-4: Detail specification for 8-way, unshielded, free and fixed connectors, for data transmissions with frequencies up to 250 MHz) was not available. Until this specification is available compliance to requirements that refer to IEC 60603-7-4 may be attained by full compliance with IEC 60603-7, combined with all applicable requirements of Clause 10 of this standard.

[e] At the time of publication IEC 60603-7-5 (Connectors for electronic equipment – Part 7-5: Detail specification for 8-way, shielded, free and fixed connectors, for data transmissions with frequencies up to 250 MHz) was not available. Until this specification is available compliance to requirements that refer to IEC 60603-7-5 may be attained by full compliance with IEC 60603-7-1, combined with all applicable requirements of Clause 10 of this standard.

[f] In installations where other factors, such as HEM (see ISO/IEC 15018) applications, take preference over backward compatibility offered with IEC 60603-7-7, the interface specified in IEC/PAS 61076-3-104/Ed.1 may also be used.

10.2.4.3 Connecting hardware for use in distributors and consolidation points

Connecting hardware for use in distributors and consolidation points of a given category shall meet the corresponding performance requirements specified in the following tables irrespective of the mating interface used. All two-piece connections that are not covered by 10.2.4.2 shall comply with the mechanical and environmental performance requirements specified in IEC 60603-7 for unscreened connectors or IEC 60603-7-1 for screened connector. All electrical requirements shall be met before and after mechanical and environmental performance testing, as prescribed in IEC 60603-7 or IEC 60603-7-1.

For connecting devices that provide cross-connections without patch cords or jumpers, electrical performance shall not be worse than the equivalent of two connectors and 5 m of patch cord of the same category. Applicable parameters include insertion loss, input to output resistance, input to output resistance unbalance, propagation delay, delay skew, and transfer impedance. In addition, crosstalk, return loss and unbalance attenuation (near end, TCL) of such devices shall not exceed 6 dB worse than the minimum values specified in the following tables. Cross-connections with "internal" switching that replaces jumpers or patch cords are an example of such devices.

Copyright International Organization for Standardization
Provided by IHS under license with ISO
No reproduction or networking permitted without license from IHS Not for Resale

Table 30 – Return loss

Electrical characteristics	Frequency MHz	Requirement			Test standard
		Connector category			
		5	6	7	
Minimum return loss [a] dB	1 to 100	60 – 20 lg(*f*)	–	–	IEC 60512-25-5
	1 to 250	–	64 – 20 lg(*f*)	–	
	1 to 600	–	–	68 – 20 lg(*f*)	
Minimum return loss at key frequencies dB	1	30,0	30,0	30,0	
	100	20,0	24,0	28,0	
	250	N/A	16,0	20,0	
	600	N/A	N/A	12,4	

[a] Return loss at frequencies that correspond to calculated values of greater than 30,0 dB shall revert to a minimum requirement of 30,0 dB.

Table 31 – Insertion loss

Electrical characteristics	Frequency MHz	Requirement			Test standard
		Connector category			
		5	6	7	
Maximum insertion loss [a] dB	1 to 100	$0{,}04\sqrt{f}$	–	–	IEC 60512-25-2
	1 to 250	–	$0{,}02\sqrt{f}$	–	
	1 to 600	–	–	$0{,}02\sqrt{f}$	
Maximum insertion loss at key frequencies dB	1	0,10	0,10	0,10	
	100	0,40	0,20	0,20	
	250	N/A	0,32	0,32	
	600	N/A	N/A	0,49	

[a] Insertion loss at frequencies that correspond to calculated values of less than 0,1 dB shall revert to a requirement of 0,1 dB maximum.

Table 32 – Near end crosstalk (NEXT)

Electrical characteristics	Frequency MHz	Requirement			Test standard
		Connector category			
		5	6	7	
Minimum near end crosstalk (*NEXT*) [a] dB	1 to 100	83 – 20 lg (*f*)	–	–	IEC 60512-25-1
	1 to 250	–	94 – 20 lg (*f*)	–	
	1 to 600	–	–	102,4 – 15 lg (*f*)	
Minimum *NEXT* at key frequencies dB	1	80,0	80,0	80,0	
	100	43,0	54,0	72,4	
	250	N/A	46,0	66,4	
	600	N/A	N/A	60,7	

[a] *NEXT* at frequencies that correspond to calculated values of greater than 80,0 dB shall revert to a minimum requirement of 80,0 dB.

Copyright International Organization for Standardization
Provided by IHS under license with ISO
No reproduction or networking permitted without license from IHS Not for Resale

Table 33 – Power sum near end crosstalk (PS NEXT)
(for information only)

Electrical characteristics	Frequency MHz	Requirement [b]			Test standard
		Connector category			
		5	6	7	
Minimum power sum near end crosstalk (*PS NEXT*) [a] dB	1 to 100	80 – 20 lg(*f*)	–	–	IEC 60512-25-1
	1 to 250	–	90 – 20 lg(*f*)	–	
	1 to 600	–	–	99,4 – 15 lg(*f*)	
Minimum *PS NEXT* at key frequencies dB	1	77,0	77,0	77,0	
	100	40,0	50,0	69,4	
	250	N/A	42,0	63,4	
	600	N/A	N/A	57,7	

[a] *PS NEXT* at frequencies that correspond to calculated values of greater than 77,0 dB shall revert to a minimum requirement of 77,0 dB.

[b] Equations and values for power sum NEXT are provided for information only.

Table 34 – Far end crosstalk (FEXT)

Electrical characteristics	Frequency MHz	Requirement			Test standard
		Connector category			
		5	6	7	
Minimum far end crosstalk (*FEXT*) [a, b] dB	1 to 100	75,1 – 20 lg(*f*)	–	–	IEC 60512-25-1
	1 to 250	–	83,1 – 20 lg(*f*)	–	
	1 to 600	–	–	90 – 15 lg(*f*)	
Minimum *FEXT* at key frequencies dB	1	65,0	65,0	65,0	
	100	35,1	43,1	60,0	
	250	N/A	35,1	54,0	
	600	N/A	N/A	48,3	

[a] *FEXT* at frequencies that correspond to calculated values of greater than 65,0 dB shall revert to a minimum requirement of 65,0 dB.

[b] For connectors, the difference between FEXT and ELFEXT is minimal. Therefore, connector FEXT requirements are used to model ELFEXT performance for links and channels.

Copyright International Organization for Standardization
Provided by IHS under license with ISO
No reproduction or networking permitted without license from IHS Not for Resale

Table 35 – Power sum far end crosstalk (PS FEXT)
(for information only)

Electrical characteristics	Frequency MHz	Requirement [c]			Test standard
		Connector category			
		5	6	7	
Minimum power sum far end crosstalk (*PS FEXT*) [a, b] dB	1 to 100	72,1 – 20 lg(*f*)	-	–	IEC 60512-25-1
	1 to 250	–	80,1 – 20 lg(*f*)	–	
	1 to 600	–	–	87 – 15 lg(*f*)	
Minimum *PS FEXT* at key frequencies dB	1	62,0	62,0	62,0	
	100	32,1	40,1	57,0	
	250	N/A	32,1	51,0	
	600	N/A	N/A	45,3	

[a] *PS FEXT* at frequencies that correspond to calculated values of greater than 62,0 dB shall revert to a minimum requirement of 62,0 dB.

[b] For connectors, the difference between PS FEXT and PS ELFEXT is minimal. Therefore, connector PS FEXT requirements are used to model PS ELFEXT performance for links and channels.

[c] Equations and values for power sum FEXT are provided for information only.

Table 36 – Input to output resistance

Electrical characteristics	Frequency	Requirement			Test standard
		Connector category			
		5	6	7	
Maximum input to output resistance [a] mΩ	d.c.	200	200	200	IEC 60512-2 Test 2a

[a] Input to output resistance is a separate measurement from the contact resistance measurements required in series IEC 60603-7. Input to output resistance is measured from cable termination to cable termination to determine the connector's ability to transmit direct current and low frequency signals. Contact resistance measurements are used to determine mechanical and environmental performance of individual electrical connections. These requirements are applicable to each conductor and to the screen, when present.

Table 37 – Input to output resistance unbalance

Electrical characteristics	Frequency	Requirement			Test standard
		Connector category			
		5	6	7	
Maximum input to output [a] resistance unbalance mΩ	d.c.	50	50	50	IEC 60512-2 Test 2a

[a] Input to output resistance measurements are made from cable termination to cable termination.

Copyright International Organization for Standardization
Provided by IHS under license with ISO
No reproduction or networking permitted without license from IHS Not for Resale

Table 38 – Current carrying capacity

Electrical characteristics	Frequency	Requirement			Test standard
		Connector category			
		5	6	7	
Minimum current carrying capacity [a, b, c] A	d.c.	0,75	0,75	0,75	IEC 60512-3 Test 5b

[a] Applicable for an ambient temperature of 60 °C.

[b] Sample preparation shall be as specified in IEC 60603-7 (unscreened) or IEC 60603-7-1 (screened).

[c] Applicable to each conductor including the screen, if present.

Table 39 – Propagation delay

Electrical characteristics	Frequency MHz	Requirement			Test standard
		Connector category			
		5	6	7	
Maximum propagation delay ns	1 to 100	2,5	–	–	IEC 60512-25-4
	1 to 250	–	2,5	–	
	1 to 600	–	–	2,5	

Table 40 – Delay skew

Electrical characteristics	Frequency MHz	Requirement			Test standard
		Connector category			
		5	6	7	
Maximum delay skew ns	1 to 100	1,25	–	–	IEC 60512-25-4
	1 to 250	–	1,25	–	
	1 to 600	–	–	1,25	

Table 41 – Transverse conversion loss (TCL) f.f.s.

Electrical characteristics	Frequency MHz	Requirement			Test standard
		Connector category			
		5	6	7	
Minimum transverse conversion loss (*TCL*) [a] dB	1 to 100	66 – 20 lg(*f*)	–	–	IEC 60603-7-7, Annex K
	1 to 250	–	66 – 20 lg(*f*)	–	
	1 to 600	–	–	66 – 20 lg(*f*) [b]	
Minimum *TCL* at key frequencies dB	1	60,0	60,0	60,0	
	100	26,0	26,0	26,0	
	250	N/A	18,0	18,0	
	600	N/A	N/A	f.f.s.	

[a] *TCL* at frequencies that correspond to calculated values of greater than 60,0 dB shall revert to a minimum requirement of 60,0 dB.

[b] The applicability of this equation and test standard at frequencies above 250 MHz is f.f.s.

Copyright International Organization for Standardization
Provided by IHS under license with ISO
No reproduction or networking permitted without license from IHS Not for Resale

Table 42 – Transfer impedance (screened connectors only)

Electrical characteristics	Frequency MHz	Requirement			Test standard
		Connector category			
		5	6	7	
Maximum transfer impedance Ω	1 to 10	$0,1\ f^{0,3}$	$0,1\ f^{0,3}$	$0,05\ f^{0,3}$	IEC 60512-25-5
	10 to 80	$0,02\ f$	$0,02\ f$	$0,01\ f$	
Maximum transfer impedance at key frequencies Ω	1	0,10	0,10	0,05	
	10,0	0,20	0,20	0,10	
	80,0	1,60	1,60	0,80	

Table 43 – Insulation resistance

Electrical characteristics	Frequency	Requirement			Test standard
		Connector category			
		5	6	7	
Minimum insulation resistance MΩ	d.c.	100	100	100	IEC 60512-2 Test 3a, Method C – 500 V d.c.

Table 44 – Voltage proof

Electrical characteristics	Frequency	Requirement			Test standard
		Connector category			
		5	6	7	
Minimum voltage proof V	d.c.				
Conductor to conductor		1 000	1 000	1 000	IEC 60512-2 Test 4a
Conductor to test panel		1 500	1 500	1 500	

10.2.5 Telecommunications outlet requirements

For cabling Classes A through F, each horizontal balanced cable shall be terminated at the telecommunications outlet with an unkeyed socket that meets 10.2.3 and 10.2.4. Pin and pair grouping assignments shall be as shown in Figure 15.

Copyright International Organization for Standardization
Provided by IHS under license with ISO
No reproduction or networking permitted without license from IHS Not for Resale

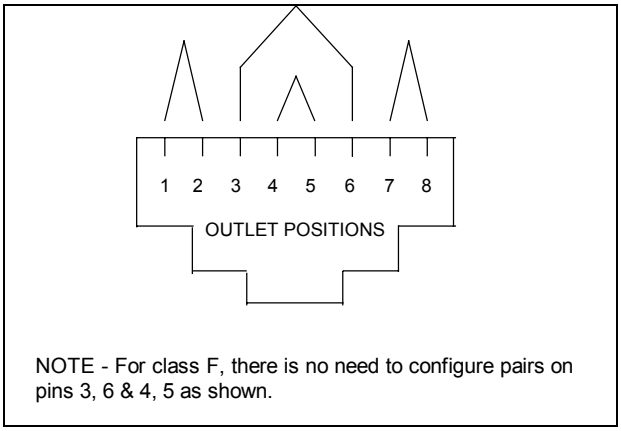

Figure 15 – Eight-position outlet pin and pair grouping assignments (front view of connector)

If different interfaces are used at the distributor, CP or TO in the same link or channel, the cabling connections shall be configured with consistent pin/pair assignments to ensure end-to-end connectivity. Pair rearrangement at the telecommunications outlet should not involve modification of the horizontal cable terminations. If pair rearrangement is used at the telecommunications outlet, the configuration of the outlet terminations shall be clearly identified.

Plugs and sockets that are intermateable shall be backward compatible with those of different performance categories. Backward compatibility means that mated connections with plugs and sockets from different categories shall meet all requirements for the lower category component. See Table 45 for a matrix of mated modular connector performance that is representative of backward compatible connectivity.

Table 45 – Matrix of backward compatible mated modular connector performance

		Category of modular connector (TO) performance		
		Category 5	**Category 6**	**Category 7**
Modular Plug & Cord Performance	**Category 5**	Category 5	Category 5	Category 5
	Category 6	Category 5	Category 6	Category 6
	Category 7	Category 5	Category 6	Category 7

NOTE 1 When two physically similar cabling links are used in the same installation, special precautions are required to ensure that they are properly identified at the telecommunications outlet. Examples of when such identification is necessary would include different performance classes or cables with different nominal impedance. See Clause 12.

NOTE 2 For proper connectivity, care is needed to ensure that pairs are terminated consistently at the telecommunications outlet and floor distributor. If pairs are terminated on different positions at the two ends of a link, although DC continuity may be maintained, through connectivity will be lost. See Clause 12 for cabling system administration.

10.2.6 Design considerations for installation

Connecting hardware should be designed in such a way that the untwisted length in a cable element, resulting from its termination to connecting hardware is as short as possible.

--`,,```,,,,````-`-`,,`,,`,`,,`---

Copyright International Organization for Standardization
Provided by IHS under license with ISO
No reproduction or networking permitted without license from IHS
Not for Resale

Connecting hardware should permit a minimum length of exposed pairs between the end of the cable sheath and the point of termination. In addition, only the length of cable sheath required for termination and trimming should be removed or stripped back. These recommendations are provided to minimise the impact of terminations on transmission performance and are not intended to constrain twist length for cable or jumper construction.

Earthing requirements and screen continuity considerations are specified in Clause 11.

10.3 Optical fibre connecting hardware

10.3.1 General requirements

The requirements of 10.3.2 through 10.3.5 apply to all connecting hardware used to provide connections between optical fibre cables described in Clause 9 with the following exception. The requirements of 10.3.4 and Table 46, item a) apply to the telecommunications outlet only.

NOTE Fibre adapters and connectors should be protected from dust and other contaminants while they are in an unmated state. It is also recommended to clean fibre end-faces prior to connection.

10.3.2 Marking and colour coding

Correct coding of connectors and adapters, for example by colour, should be used to ensure that mating of different optical fibre types does not occur. In addition, keying and the identification of optical fibre positions may be used to ensure that correct polarity is maintained for duplex links.

The connectors and adapters should be coloured to distinguish between single-mode and multimode optical fibres. Additional colours or labels may be required to distinguish between the multimode optical fibre types.

NOTE 1 These markings are in addition to, and do not replace, other markings specified in Clause 12, or those required by local codes or regulations.

NOTE 2 The following colour codes apply to IEC 60874-19-1 SC duplex and IEC 60874-14 SC simplex connectors but may also be used for other connector types:

Multimode 50 µm and 62,5 µm:	Beige or black
Single-mode PC:	Blue
Single-mode APC:	Green

10.3.3 Mechanical and optical characteristics

Optical fibre connecting hardware shall meet the requirements of Table 46. All connections not covered by 10.3.4 shall comply with at least the equivalent optical, mechanical and environmental performance requirements specified in IEC 60874-19-1.

--`,,```,,,,````-`-`,,`,,`,`,,`---

Copyright International Organization for Standardization
Provided by IHS under license with ISO
No reproduction or networking permitted without license from IHS Not for Resale

Table 46 – Mechanical and optical characteristics of optical fibre connecting hardware

Mechanical and optical characteristics			Requirement	Component or test standard
a)	Physical dimensions (only at telecommunications outlet) [a, d]		Mating dimensions and gauging	IEC 60874-19-3 (multimode) or IEC 60874-19-2 (single-mode)
b)	Cable termination compatibility			
	Nominal cladding diameter μm		125	IEC 60793-2, Clause 5 (A1a, A1b) and 32.2 (B1)
	Nominal buffer diameter mm		–	IEC 60794-2, 6.1
	Cable outer diameter mm		–	IEC 60794-2, 6.1
c)	Mechanical endurance (durability) cycles		≥500	IEC 61300-2-2
d)	Mated pair transmission performance			
	Maximum insertion loss [b, c] dB	Other	0,75	IEC 61300-3-34
		Splice	0,3	IEC 61073-1
	Minimum return loss dB	Multimode	20	IEC 61300-3-6
		Single-mode	35	

[a] See 10.3.4

[b] As required in IEC 61753-1-1, Class M1.

[c] Insertion loss values of connectors and splices shall be met with the referenced test method where the optical source produces an overfilled launch condition (for example, an LED source). Measurements with an optical source that produces an underfilled launch condition (for example, a laser source) will always produce lower insertion loss values.

[d] The connectors used with the specified SC duplex adaptors shall meet the IEC 60874-14 (simplex) or IEC 60874-19 (duplex) series of detail specifications.

10.3.4 Telecommunications outlet requirements

The optical fibre cables in the work area shall be connected to the horizontal cabling at the telecommunications outlet with a duplex SC-connector, (SC-D), that complies with IEC 60874-19-1.

The optical fibre connector used at the TO shall meet the requirements of 10.3.3.

10.3.5 Connection schemes for optical fibre cabling

10.3.5.1 General

Consistent polarity of duplex optical fibre connections shall be maintained throughout the cabling system by means of physical keying, administration (i.e., labelling) or both. The following guidelines are provided to ensure that properly installed connectors and adapters provide a functional and maintainable optical fibre cabling system. Consult with equipment manufacturers and system integrators to determine the suitability of these guidelines for specific networking applications. Additionally, all optical ports should comply with IEC 60825.

To ensure maximum flexibility on the cabling side of TOs and distributor panels a simplex connector is recommended for the termination of horizontal and backbone optical cables as illustrated in Figure 16.

Copyright International Organization for Standardization
Provided by IHS under license with ISO
No reproduction or networking permitted without license from IHS Not for Resale

On the work area or patch side of TOs and distributor panels, a duplex presentation maintains the correct polarity of transmit and receive optical fibres in two optical fibre transmission systems while still allowing transmission systems using other optical fibre counts. At the distributor, this presentation is preferably a duplex adapter that maintains the proper spacing and alignment as defined by IEC 60874-19-1 or other applicable IEC interface standards.

Polarity is defined at the TO by either keying, or labelling of the adapters as position A and B. To extend this polarity to the entire cabling system, it is important that the same keying orientation, colour coding, marking, and optical fibre configuration be consistently applied. Once the system is installed and correct polarity is verified, the optical fibre cabling system will maintain the correct polarity of transmit and receive optical fibres.

10.3.5.2 Connectivity options at the TO

The connectors and adapters shall have their keys oriented as shown in Figure 16.

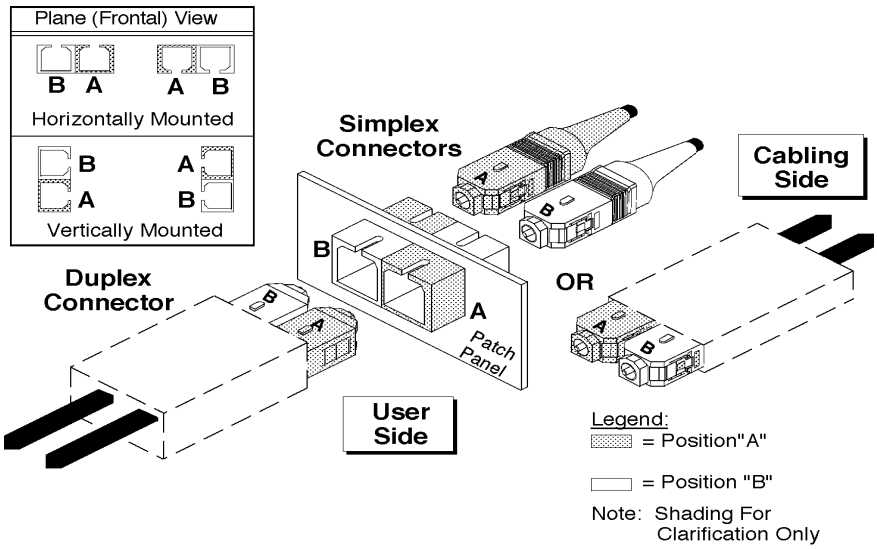

Figure 16 – Duplex SC connectivity configuration

10.3.5.3 Connectivity options at other locations

Polarity at locations other than the TO may be maintained by the strict control of changes to the connectivity at distributors and CPs, or by adopting the configurations detailed in 10.3.5.2. Connectors at locations other than the TO shall meet the optical, mechanical, and environmental requirements stated in IEC 60874-19-1, although they may have other mating interfaces.

10.3.5.4 Other duplex connectors

Alternate connector designs (for example SFF) shall employ similar labelling and identification schemes to the duplex SC. Position A and B on alternate duplex connector designs shall be in the same position as the IEC 60874-19-1 (SC duplex) in Figure 16. For alternate connector designs utilising latches, the latch defines the positioning in the same manner as the key and keyways.

When high density is an important consideration for the building entrance facility, campus distributor, building distributor, floor distributor, or consolidation point, then Small Form Factor (SFF) connector designs are recommended. When used, SFF connectors shall be covered by an approved IEC interface standard and shall satisfy the performance requirements of 10.3.3.

Copyright International Organization for Standardization
Provided by IHS under license with ISO
No reproduction or networking permitted without license from IHS Not for Resale

10.3.5.5 Patch cord termination configuration

It is recommended that connection of patch cords and equipment cords to the duplex adapter be made by means of a duplex connector assembly.

Optical fibre patch cords, whether they are used for cross-connection or interconnection to equipment, shall be of a cross-over orientation such that Position A goes to Position B on one optical fibre, and Position B goes to Position A on the other optical fibre of the optical fibre pair (Figure 17). Each end of the optical fibre patch cord shall be identified to indicate Position A and Position B if the connector can be separated into its simplex components. For alternate connector designs utilising latches, the latch defines the positioning in the same manner as the keys.

For simplex connectors, the connector that plugs into the receiver shall be considered Position A, and the connector that plugs into the transmitter shall be considered Position B.

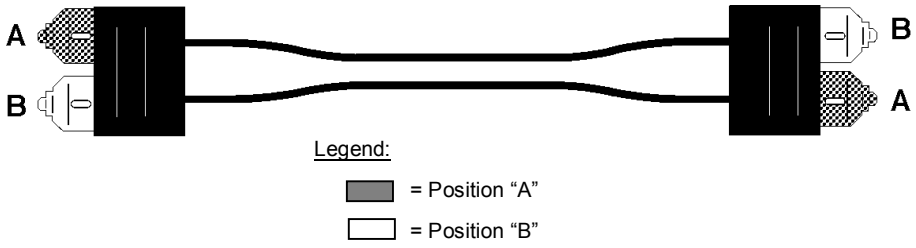

Figure 17 – Optical fibre patch cord

11 Screening practices

11.1 General

This clause applies when screened cables or cables with screened elements or units are used. Only basic guidance is provided. The procedures necessary to provide adequate earthing for both electrical safety and EM performance are subject to national and local regulations, always to proper workmanship in accordance with ISO/IEC TR 14763-2, and in certain cases to installation specific engineering. Some cabling employs components that utilise screening for additional crosstalk performance and is therefore also subject to screening practices. Note that a proper handling of screens in accordance with ISO/IEC TR 14763-2 and suppliers' instructions will increase performance and safety.

11.2 Electromagnetic performance

Cabling screens should be properly bonded to earth for electrical safety and to optimise EM performance. All cabling components which form part of a screened channel should be screened and meet the screening requirements given in Clauses 9 and 10. Screened cabling links shall meet cabling screening requirements given in 6.4. Cable screens shall be terminated to connector screens by low impedance terminations sufficient to maintain screen continuity necessary to meet cabling screening requirements. Suppliers' instructions as how to make low impedance terminations shall be asked for and observed. Work area, equipment cords and the equipment attachment should be screened and if so, shall provide screen continuity.

Copyright International Organization for Standardization
Provided by IHS under license with ISO
No reproduction or networking permitted without license from IHS Not for Resale

11.3 Earthing

Earthing and bonding shall be in accordance with applicable electrical codes or IEC 60364-1. All screens of the cables shall be bonded at each distributor. Normally, the screens are bonded to the equipment racks, which are, in turn, bonded to building earth.

NOTE High working frequencies and/or high frequencies of parasitic currents or fields require earthing with low impedance, which may be realised with a meshed system.

The bond shall be designed to ensure that

a) The path to earth shall be permanent, continuous and of low impedance. It is recommended that each equipment rack is individually bonded, in order to assure the continuity of the earth path.
b) The cable screens provide a continuous earth path to all parts of a cabling system that are interconnected by it.

This bonding ensures that voltages that are induced into cabling (by any disturbances from power lines or any other disturbers) are directed to building earth, and so do not cause interference to the transmitted signals. All earthing electrodes to different systems in the building shall be bonded together to reduce effects of differences in earth potential. The building earthing system should not exceed the earth potential difference limits of 1 V r.m.s. between any two earths on the network.

12 Administration

Administration is an essential aspect of generic cabling. The flexibility of generic cabling can be fully exploited only if the cabling and its use is properly administered. Administration involves accurate identification and record keeping of all the components that comprise the cabling system as well as the pathways, distributors and other spaces in which it is installed. All changes to the cabling should be recorded when they are carried out. Computer based administration of records is strongly recommended for larger installations.

Telecommunications cabling administration shall comply with ISO/IEC 14763-1.

13 Balanced cords

13.1 Introduction

This clause covers balanced cords constructed of two plugs as specified in the IEC 60603-7 series and balanced cables as specified in the document series IEC 61156. The components used in these cords shall meet the requirements of Clauses 9 and 10. Their purpose is to connect to connecting hardware that utilises sockets that are also defined in the IEC 60603-7 series.

NOTE It is assumed that cords that use connectors with interfaces other than the IEC 60603-7 series also meet the requirements of this clause.

Connecting hardware performance is subject to influence by the properties of the plug termination and therefore cords should be tested to determine the quality of the assembly. This clause specifies the minimum requirements for cords. The test methods and mechanical stresses are specified in IEC 61935-2. All requirements of this clause have to be met after first exposing the device under test to the mechanical stress. Cords shall meet the electrical and mechanical requirements of IEC 61935-2.

13.2 Insertion loss

Insertion loss (*IL*) of cords shall not exceed the value stated for the given length. The insertion loss performance is achieved by design.

Copyright International Organization for Standardization
Provided by IHS under license with ISO
No reproduction or networking permitted without license from IHS Not for Resale

13.3 Return loss

Cords shall meet return loss (*RL*) requirements specified in Table 47. The cords shall meet the electrical and mechanical properties of IEC 61935-2.

Table 47 – Minimum return loss for balanced cords

Frequency MHz	**Return loss** dB
	All Categories
$1 \le f < 25$	19,8 + 3 lg(f)
$25 \le f \le 100/250/600$	38,0 – 10 lg(f)

Table 48 – Informative values of return loss at key frequencies for Category 5, 6 and 7 cords

Frequency MHz	**Return Loss** dB		
	Category 5 cord	**Category 6 cord**	**Category 7 cord**
1	19,8	19,8	19,8
16	23,4	23,4	23,4
100	18,0	18,0	18,0
250	N/A	14,0	14,0
600	N/A	N/A	10,2

13.4 NEXT

The cords for Category 5, 6 and 7 shall meet the requirements calculated according to equations (6) to (10) when measured in accordance with IEC 61935-2.

$$NEXT_{\text{cord}} = -10 \lg \left(10^{\frac{-NEXT_{\text{connectors}}}{10}} + 10^{\frac{-NEXT_{\text{cable}} + 2 \cdot IL_{\text{connector}}}{10}} \right) + RSXT \qquad (6)$$

where

$NEXT_{\text{cord}}$ is the NEXT of the entire cord in dB

$NEXT_{\text{connectors}}$ is the NEXT of the connectors in dB

$NEXT_{\text{cable}}$ is the NEXT of the cable itself in dB

$IL_{\text{connector}}$ is the insertion loss of one connector in dB

$RSXT$ is the reflected signal cross talk

NOTE The value for “cord”, “connector” and “cable” is expressed in dB.

with

$RSXT$ = 0 dB for category 5 cords

$RSXT$ = 0,5 dB for category 6 and category 7 cords.

and

--`,,```,,,,````-`-`,,`,,`,`,,`---

Copyright International Organization for Standardization
Provided by IHS under license with ISO
No reproduction or networking permitted without license from IHS Not for Resale

$$NEXT_{\text{connectors}} = -20\ \lg\left(10^{\frac{-NEXT_{\text{local}}}{20}} + 10^{\frac{-NEXT_{\text{remote}} + 2\left(IL_{\text{cable}} + IL_{\text{connector}}\right)}{20}}\right) \quad (7)$$

The frequency dependence of *NEXT*, if the anchor value at 100 MHz is known, is given by:

$$NEXT_{\text{local}} = NEXT_{\text{remote}} = NEXT_{\text{connector}}(100) - 20\lg\left(\frac{f}{100}\right) \quad (8)$$

$$IL_{\text{cable}} \approx \alpha_{\text{cable 100 m}} \times \frac{L}{100} \quad (9)$$

where

$NEXT_{\text{local}}$	is the *NEXT* of the connector at the local end of the cord in dB
$NEXT_{\text{remote}}$	is the *NEXT* of the connector at the remote end of the cord in dB
IL_{cable}	is the insertion loss of the cable in dB
$IL_{\text{connector}}$	is the insertion loss of the connector in dB
$NEXT_{\text{connector}}(100)$	is the *NEXT* of the connector in dB at 100 MHz
$\alpha_{\text{cable 100 m}}$	is the insertion loss of 100 m of the cable used for the cord
L	is the length of the cable in the cord

The length corrected near-end crosstalk of the cable of the cord is given by:

$$NEXT_{\text{cable,L}} = NEXT_{\text{cable, 100 m}} - 10\times\lg\frac{1 - 10^{\frac{L}{100}\frac{\alpha_{\text{cable, 100 m}}}{5}}}{1 - 10^{\frac{\alpha_{\text{cable, 100 m}}}{5}}} \quad (10)$$

Calculations yielding *NEXT* limits in excess of 65 dB shall revert to a limit of 65 dB. Table 49 lists informative values of *NEXT* at key frequencies for different length of the cords.

Copyright International Organization for Standardization
Provided by IHS under license with ISO
No reproduction or networking permitted without license from IHS Not for Resale

Table 49 – Informative values of NEXT at key frequencies for Category 5, 6 and 7 cords

Frequency MHz	NEXT dB								
	Category 5 cord			Category 6 cord			Category 7 cord		
	Length			Length			Length		
	2 m	5 m	10 m	2 m	5 m	10 m	2 m	5 m	10 m
1	65,0	65,0	65,0	65,0	65,0	65,0	65,0	65,0	65,0
16	50,3	49,5	48,7	61,6	60,0	58,5	65,0	65,0	65,0
100	35,0	34,7	34,5	46,2	45,0	44,2	65,0	65,0	65,0
250	N/A			38,6	37,9	37,6	60,7	61,2	61,9
600				N/A			55,4	56,2	57,0

For the commonly available Category 5 test head the anchor value at 100 MHz is:

$$NEXT_{\text{connector}}(100) = 41,0 \qquad (11)$$

--`,,```,,,,````-`-`,,`,,`,`,,`---

Copyright International Organization for Standardization
Provided by IHS under license with ISO
No reproduction or networking permitted without license from IHS Not for Resale

Annex A
(normative)

Balanced permanent link and CP link performance

A.1 General

This Annex contains performance requirement equations for balanced permanent links and CP links as shown in Figure A.1.

The cabling under test in configurations A, B and C is termed the permanent link. The configurations A and B comprise fixed cabling only. Configuration C comprises fixed cabling and a CP cable between the CP and the TO. Measurements made for this configuration shall be repeated if the CP cable is changed. The cabling under test in configuration D contains fixed cabling only and is termed the CP link.

In all configurations the test configuration reference plane of a permanent link or CP link is within the test cord. The test cord connection which mates with the termination point of the permanent link or CP link under test is part of the link under test.

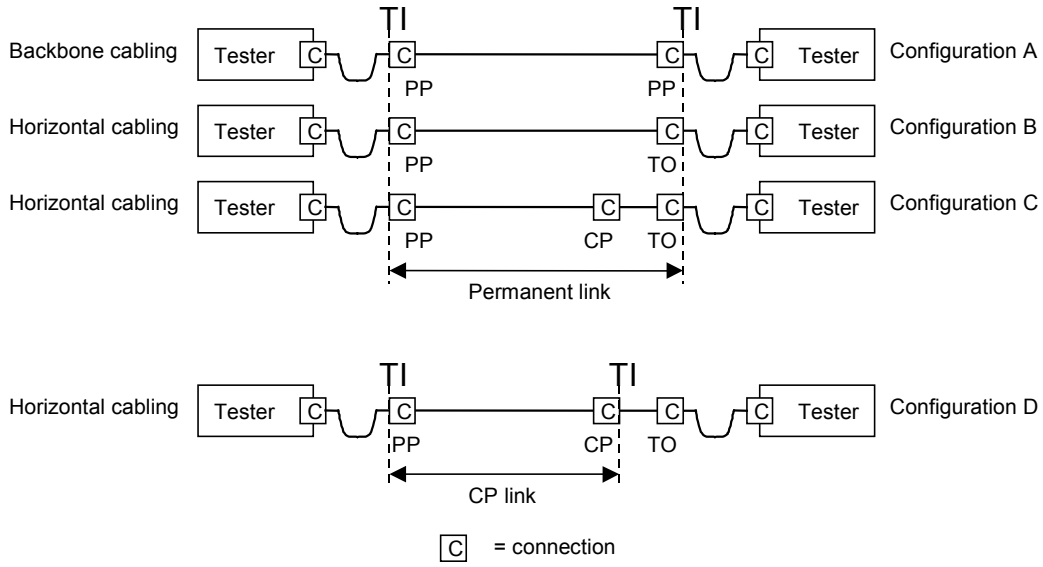

PP = patch panel; C = connection (mated pair); CP = consolidation point;
TO = telecommunications outlet; TI = Test interface

Figure A.1 – Link options

A.2 Performance

A.2.1 General

The parameters specified in this Annex apply to balanced permanent links and CP links with screened or unscreened cable elements, with or without an overall screen, unless explicitly stated otherwise.

The nominal impedance of balanced permanent links and CP links is 100 Ω. This impedance is achieved by suitable design, and an appropriate choice of cabling components (irrespective of their nominal impedance).

Copyright International Organization for Standardization
Provided by IHS under license with ISO
No reproduction or networking permitted without license from IHS Not for Resale

The requirements in this Annex are given by limits computed, to one decimal place, using the equation for a defined frequency range. The limits for the propagation delay and delay skew are computed to three decimal places.

A.2.2 Return loss

The return loss (*RL*) of each pair of a permanent link or CP link shall meet the requirements derived by the equation in Table A.1.

The return loss (*RL*) of each pair of a permanent link with maximum implementation at key frequencies is given in Table A.2.

The return loss (*RL*) requirements shall be met at both ends of the cabling. Return loss (*RL*) values at frequencies where the insertion loss is below 3,0 dB are for information only.

When required, the return loss shall be measured according to IEC 61935-1. Terminations of 100 Ω shall be connected to the cabling elements under test at the remote end of the channel.

Table A.1 – Return loss for permanent link or CP link

Class	Frequency MHz	Minimum return loss dB
C	$1 \le f \le 16$	15,0
D	$1 \le f < 20$	19,0
	$20 \le f \le 100$	32 – 10 lg(*f*)
E	$1 \le f < 10$	21,0
	$10 \le f < 40$	26 – 5 lg(*f*)
	$40 \le f \le 250$	34 – 10 lg(*f*)
F	$1 \le f < 10$	21,0
	$10 \le f < 40$	26 – 5 lg(*f*)
	$40 \le f < 251,2$	34 – 10 lg(*f*)
	$251,2 \le f \le 600$	10,0

Table A.2 – Informative return loss values for permanent link with maximum implementation at key frequencies

Frequency MHz	Minimum return loss dB			
	Class C	Class D	Class E	Class F
1	15,0	19,0	21,0	21,0
16	15,0	19,0	20,0	20,0
100	N/A	12,0	14,0	14,0
250	N/A	N/A	10,0	10,0
600	N/A	N/A	N/A	10,0

Copyright International Organization for Standardization
Provided by IHS under license with ISO
No reproduction or networking permitted without license from IHS Not for Resale

A.2.3 Insertion loss/attenuation

The insertion loss of each pair of a permanent link or CP link shall meet the requirements derived by the equation in Table A.3.

A practical method of establishing conformant link performance is to demonstrate that the margin between the measured value and the channel limits of Table 4 are adequate to accommodate any additional cabling components used to create a channel.

The insertion loss of each pair of a permanent link with maximum implementation is given in Table A.4.

The insertion loss shall be consistent with the cabling components used.

When required, the insertion loss shall be measured according to IEC 61935-1.

Table A.3 – Insertion loss for permanent link or CP link

Class	**Frequency** MHz	**Maximum insertion loss** [a] dB
A	$f = 0{,}1$	16,0
B	$f = 0{,}1$	5,5
	$f = 1$	5,8
C	$1 \le f \le 16$	$0{,}9 \times \left(3{,}23\sqrt{f}\right) + 3 \times 0{,}2$
D	$1 \le f \le 100$	$\left(L/100\right) \times \left(1{,}910\,8\sqrt{f} + 0{,}022\,2 \times f + 0{,}2/\sqrt{f}\right) + n \times 0{,}04 \times \sqrt{f}$
E	$1 \le f \le 250$	$\left(L/100\right) \times \left(1{,}82\sqrt{f} + 0{,}016\,9 \times f + 0{,}25/\sqrt{f}\right) + n \times 0{,}02 \times \sqrt{f}$
F	$1 \le f \le 600$	$\left(L/100\right) \times \left(1{,}8\sqrt{f} + 0{,}01 \times f + 0{,}2/\sqrt{f}\right) + n \times 0{,}02 \times \sqrt{f}$

NOTE:

$L = L_{FC} + L_{CP}$ Y

L_{FC} = length of fixed cable (m)

L_{CP} = length of CP cord (where present) (m)

Y = the ratio of CP cable attenuation (dB/m) to fixed horizontal cable attenuation (dB/m) (see Clause 13)

n = 2 for Configurations A, B and D

n = 3 for Configuration C

[a] Insertion loss (*IL*) at frequencies that correspond to calculated values of less than 4,0 dB shall revert to a maximum requirement of 4,0 dB.

--`,,```,,,,````-`-`,,`,,`,`,,`---

Copyright International Organization for Standardization
Provided by IHS under license with ISO
No reproduction or networking permitted without license from IHS Not for Resale

Table A.4 – Informative insertion loss values for permanent link with maximum implementation at key frequencies

Frequency MHz	Maximum insertion loss dB					
	Class A	**Class B**	**Class C**	**Class D**	**Class E**	**Class F**
0,1	16,0	5,5	N/A	N/A	N/A	N/A
1	N/A	5,8	4,0	4,0	4,0	4,0
16	N/A	N/A	12,2	7,7	7,1	6,9
100	N/A	N/A	N/A	20,4	18,5	17,7
250	N/A	N/A	N/A	N/A	30,7	28,8
600	N/A	N/A	N/A	N/A	N/A	46,6

A.2.4 NEXT

A.2.4.1 Pair-to-pair NEXT

The NEXT between each pair combination of a permanent link or CP link shall meet the requirements derived by the equation in Table A.5.

The *NEXT* between each pair combination of a permanent link with maximum implementation is given in Table A.6.

The *NEXT* requirements shall be met at both ends of the cabling. *NEXT* values at frequencies where the insertion loss (*IL*) is below 4,0 dB are for information only.

The *NEXT* shall be consistent with the cabling components used.

When required the *NEXT* shall be measured according to IEC 61935-1.

Copyright International Organization for Standardization
Provided by IHS under license with ISO
No reproduction or networking permitted without license from IHS Not for Resale

Table A.5 – NEXT for permanent link or CP link

Class	Frequency MHz	Minimum NEXT dB
A	$f = 0{,}1$	27,0
B	$0{,}1 \le f \le 1$	$25 - 15\lg(f)$
C	$1 \le f \le 16$	$40{,}1 - 15{,}8\lg(f)$
D	$1 \le f \le 100$	$-20\lg\left(10^{\frac{65{,}3-15\lg(f)}{-20}} + 10^{\frac{83-20\lg(f)}{-20}}\right)$ [a]
E	$1 \le f \le 250$	$-20\lg\left(10^{\frac{74{,}3-15\lg(f)}{-20}} + 10^{\frac{94-20\lg(f)}{-20}}\right)$ [b]
F	$1 \le f \le 600$	$-20\lg\left(10^{\frac{102{,}4-15\lg(f)}{-20}} + 10^{\frac{102{,}4-15\lg(f)}{-20}}\right)$ [b]

[a] *NEXT* at frequencies that correspond to calculated values of greater than 60,0 dB shall revert to a minimum requirement of 60,0 dB.

[b] *NEXT* at frequencies that correspond to calculated values of greater than 65,0 dB shall revert to a minimum requirement of 65,0 dB.

Table A.6 – Informative NEXT values for permanent link with maximum implementation at key frequencies

Frequency MHz	Minimum NEXT dB					
	Class A	Class B	Class C	Class D	Class E	Class F
0,1	27,0	40,0	N/A	N/A	N/A	N/A
1	N/A	25,0	40,1	60,0	65,0	65,0
16	N/A	N/A	21,1	45,2	54,6	65,0
100	N/A	N/A	N/A	32,3	41,8	65,0
250	N/A	N/A	N/A	N/A	35,3	60,4
600	N/A	N/A	N/A	N/A	N/A	54,7

A.2.4.2 Power sum NEXT (PS NEXT)

The P*S NEXT* requirements are applicable only to classes D, E and F.

The *PS NEXT* of each pair of a permanent link or CP link shall meet the requirements derived by the equation in Table A.7.

The *PS NEXT* of each pair of a permanent link with maximum implementation is given in Table A.8.

The *PS NEXT* requirements shall be met at both ends of the cabling. *PS NEXT* values at frequencies where the insertion loss (*IL*) is below 4,0 dB are for information only.

The *PS NEXT* shall be consistent with the cabling components used.

--`,,```,,,,````-`-`,,`,,`,`,,`---
Copyright International Organization for Standardization
Provided by IHS under license with ISO
No reproduction or networking permitted without license from IHS Not for Resale

PS NEXT$_k$ of pair *k* is computed as follows:

$$PS\,NEXT_k = -10\lg\sum_{i=1,\,i\neq k}^{n} 10^{\frac{-NEXT_{ik}}{10}} \qquad \text{(A.1)}$$

where

i is the number of the disturbing pair;

k is the number of the disturbed pair;

n is the total number of pairs;

NEXT$_{ik}$ is the near end crosstalk loss coupled from pair *i* into pair *k*.

Table A.7 – PS NEXT for permanent link or CP link

Class	**Frequency** MHz	**Minimum PS NEXT** dB
D	$1 \le f \le 100$	$-20\lg\left(10^{\frac{62{,}3-15\lg(f)}{-20}}+10^{\frac{80-20\lg(f)}{-20}}\right)$ [a]
E	$1 \le f \le 250$	$-20\lg\left(10^{\frac{72{,}3-15\lg(f)}{-20}}+10^{\frac{90-20\lg(f)}{-20}}\right)$ [b]
F	$1 \le f \le 600$	$-20\lg\left(10^{\frac{99{,}4-15\lg(f)}{-20}}+10^{\frac{99{,}4-15\lg(f)}{-20}}\right)$ [b]

[a] *PS NEXT* at frequencies that correspond to calculated values of greater than 57,0 dB shall revert to a minimum requirement of 57,0 dB.

[b] *PS NEXT* at frequencies that correspond to calculated values of greater than 62,0 dB shall revert to a minimum requirement of 62,0 dB.

--`,,```,,,,````-`-`,,`,,`,`,,`---

Copyright International Organization for Standardization
Provided by IHS under license with ISO
No reproduction or networking permitted without license from IHS Not for Resale

Table A.8 – Informative PS NEXT values for permanent link with maximum implementation at key frequencies

Frequency MHz	Minimum PS NEXT dB		
	Class D	Class E	Class F
1	57,0	62,0	62,0
16	42,2	52,2	62,0
100	29,3	39,3	62,0
250	N/A	32,7	57,4
600	N/A	N/A	51,7

A.2.5 Attenuation to crosstalk ratio (ACR)

The *ACR* requirements are applicable only to Classes D, E and F.

A.2.5.1 Pair-to-pair ACR

Pair-to-pair *ACR* is the difference between the pair-to-pair *NEXT* and the insertion loss of the cabling in dB.

The *ACR* of each pair combination of a permanent link or CP link shall meet the difference of the *NEXT* requirement of Table A.5 and the insertion loss requirement of Table A.3 of the respective class.

The *ACR* of each pair combination of a permanent link with maximum implementation is given in Table A.9.

The *ACR* requirements shall be met at both ends of the cabling. *ACR* values at frequencies where the insertion loss (*IL*) is below 4,0 dB are for information only.

ACR_{ik} of pairs *i* and *k* is computed as follows:

$$ACR_{ik} = NEXT_{ik} - IL_k \quad \text{(A.2)}$$

where

i is the number of the disturbing pair;

k is the number of the disturbed pair;

$NEXT_{ik}$ is the near end crosstalk loss coupled from pair *i* into pair *k*;

IL_k is the insertion loss of pair *k*. When required, it shall be measured according to IEC 61935-1.

--`,,```,,,,````-`-`,,`,,`,`,,`---
Copyright International Organization for Standardization
Provided by IHS under license with ISO
No reproduction or networking permitted without license from IHS Not for Resale

Table A.9 – Informative ACR values for permanent link with maximum implementation at key frequencies

Frequency MHz	Minimum ACR dB		
	Class D	Class E	Class F
1	56,0	61,0	61,0
16	37,5	47,5	58,1
100	11,9	23,3	47,3
250	N/A	4,7	31,6
600	N/A	N/A	8,1

A.2.5.2 Power sum ACR (PS ACR)

The *PS ACR* of each pair of a permanent link or CP link shall meet the difference of the *PS NEXT* requirement of Table A.7 and the insertion loss requirement of Table A.3 of the respective class.

The *PS ACR* of each pair of a permanent link with maximum implementation is given in Table A.10.

The *PS ACR* requirements shall be met at both ends of the cabling. *PS ACR* values at frequencies where the insertion loss (*IL*) is below 4,0 dB are for information only.

PS ACR$_k$ of pair k is computed as follows:

$$PS\,ACR_k = PS\,NEXT_k - IL_k \qquad \text{(A.3)}$$

where

k is the number of the disturbed pair;

PS NEXT$_k$ is the power sum near end crosstalk loss of pair k;

IL$_k$ is the insertion loss of pair k. When required, it shall be measured according to IEC 61935-1.

Table A.10 – Informative PS ACR values for permanent link with maximum implementation at key frequencies

Frequency MHz	Minimum PS ACR dB		
	Class D	Class E	Class F
1	53,0	58,0	58,0
16	34,5	45,1	55,1
100	8,9	20,8	44,3
250	N/A	2,0	28,6
600	N/A	N/A	5,1

A.2.6 ELFEXT

The *ELFEXT* requirements are applicable only to Classes D, E and F.

Copyright International Organization for Standardization
Provided by IHS under license with ISO
No reproduction or networking permitted without license from IHS Not for Resale

A.2.6.1 Pair-to-pair ELFEXT

The EL*F*EXT of each pair combination of a permanent link or CP link shall meet the requirements derived by the equation Table A.11.

The *ELFEXT* of each pair combination of a permanent link with maximum implementation is given in Table A.12.

The *ELFEXT* shall be consistent with the cabling components used.

$ELFEXT_{ik}$ of pairs *i* and *k* is computed as follows:

$$ELFEXT_{ik} = FEXT_{ik} - IL_k \qquad \text{(A.4)}$$

where

i is the number of the disturbed pair;

k is the number of the disturbing pair;

$FEXT_{ik}$ is the far end crosstalk loss coupled from pair *i* into pair *k*. When required, it shall be measured according to IEC 61935-1:

IL_k is the insertion loss of pair *k*. When required, it shall be measured according to IEC 61935-1.

NOTE The ratio of the insertion loss of the disturbed pair to the input-to-output *FEXT* is relevant for the signal-to-noise-ratio consideration. The results computed according to the formal definition above cover all possible combinations of insertion loss of wire pairs and corresponding input-to-output *FEXT*.

Table A.11 – ELFEXT for permanent link or CP link

Class	Frequency MHz	Minimum ELFEXT [a] dB
D	$1 \le f \le 100$	$-20\lg\left(10^{\frac{63{,}8-20\lg(f)}{-20}}+n\times10^{\frac{75{,}1-20\lg(f)}{-20}}\right)$ [b]
E	$1 \le f \le 250$	$-20\lg\left(10^{\frac{67{,}8-20\lg(f)}{-20}}+n\times10^{\frac{83{,}1-20\lg(f)}{-20}}\right)$ [c]
F	$1 \le f \le 600$	$-20\lg\left(10^{\frac{94-20\lg(f)}{-20}}+n\times10^{\frac{90-15\lg(f)}{-20}}\right)$ [c]
NOTE n = 2 for Configurations A, B and D n = 3 for Configuration C		

[a] *ELFEXT* at frequencies that correspond to measured FEXT values of greater than 70,0 dB are for information only.

[b] *ELFEXT* at frequencies that correspond to calculated values of greater than 60,0 dB shall revert to a minimum requirement of 60,0 dB.

[c] *ELFEXT* at frequencies that correspond to calculated values of greater than 65,0 dB shall revert to a minimum requirement of 65,0 dB.

Copyright International Organization for Standardization
Provided by IHS under license with ISO
No reproduction or networking permitted without license from IHS Not for Resale

Table A.12 – Informative ELFEXT values for permanent link with maximum implementation at key frequencies

Frequency MHz	Minimum ELFEXT dB		
	Class D	Class E	Class F
1	58,6	64,2	65,0
16	34,5	40,1	59,3
100	18,6	24,2	46,0
250	N/A	16,2	39,2
600	N/A	N/A	32,6

A.2.6.2 Power sum ELFEXT (PS ELFEXT)

The *PS ELFEXT* of each pair of a permanent link or CP link shall meet the requirements derived by the equation in Table A.13.

The *PS ELFEXT* of each pair of a permanent link with maximum implementation is given in Table A.14.

The *PS ELFEXT* shall be consistent with the cabling components used.

$PS\ ELFEXT_k$ of pair k is computed as follows:

$$PS\ ELFEXT_k = -10 \lg \sum_{i=1, i \neq k}^{n} 10^{\frac{-ELFEXT_{ik}}{10}} \quad \text{(A.5)}$$

where

i is the number of the disturbing pair;

k is the number of the disturbed pair;

n is the total number of pairs;

$ELFEXT_{ik}$ is the equal level far end crosstalk loss coupled from pair i into pair k.

--`,,```,,,,````-`-`,,`,,`,`,,`---
Copyright International Organization for Standardization
Provided by IHS under license with ISO
No reproduction or networking permitted without license from IHS
Not for Resale

Table A.13 – PS ELFEXT for permanent link or CP link

Class	Frequency MHz	Minimum PS ELFEXT [a] dB
D	$1 \le f \le 100$	$-20\lg\left(10^{\frac{60{,}8-20\lg(f)}{-20}}+n\times10^{\frac{72{,}1-20\lg(f)}{-20}}\right)$ [b]
E	$1 \le f \le 250$	$-20\lg\left(10^{\frac{64{,}8-20\lg(f)}{-20}}+n\times10^{\frac{80{,}1-20\lg(f)}{-20}}\right)$ [c]
F	$1 \le f \le 600$	$-20\lg\left(10^{\frac{91-20\lg(f)}{-20}}+n\times10^{\frac{87-15\lg(f)}{-20}}\right)$ [c]
NOTE n = 2 for configurations A, B and D n = 3 for configuration C		

[a] *PS ELFEXT* at frequencies that correspond to measured FEXT values of greater than 70,0 dB are for information only.

[b] *PS ELFEXT* at frequencies that correspond to calculated values of greater than 57,0 dB shall revert to a minimum requirement of 57,0 dB.

[c] *PS ELFEXT* at frequencies that correspond to calculated values of greater than 62,0 dB shall revert to a minimum requirement of 62,0 dB.

Table A.14 – Informative PS ELFEXT values for permanent link with maximum implementation at key frequencies

Frequency MHz	Minimum PS ELFEXT dB		
	Class D	Class E	Class F
1	55,6	61,2	62,0
16	31,5	37,1	56,3
100	15,6	21,2	43,0
250	N/A	13,2	36,2
600	N/A	N/A	29,6

A.2.7 Direct current (d.c.) loop resistance

The d.c. loop resistance of each pair of a permanent link or CP link shall meet the requirements derived by the equation in Table A.15.

A practical method of establishing conformant link performance is to demonstrate that the margin between the measured value and the channel limits of Table 16 are adequate to accommodate any additional cabling components used to create a channel. This is fulfilled if the insertion loss requirement and the delay skew requirement for the permanent link or CP link are met.

The d.c. loop resistance of each pair of a permanent link with maximum implementation is given in Table A.16.

The d.c. loop resistance shall be consistent with the cabling components used.

Copyright International Organization for Standardization
Provided by IHS under license with ISO
No reproduction or networking permitted without license from IHS Not for Resale

When required, the d.c. loop resistance shall be measured according to IEC 61935-1.

Table A.15 – Direct current (d.c.) loop resistance for permanent link or CP link

Class	Maximum d.c. loop resistance Ω
A	530
B	140
C	34
D	$(L/100) \times 22 + n \times 0,4$
E	$(L/100) \times 22 + n \times 0,4$
F	$(L/100) \times 22 + n \times 0,4$

NOTE

L	$L_{FC} + L_{CP} \times Y$
L_{FC}	length of fixed cable (m)
L_{CP}	length of CP cord (where present) (m)
Y	the ratio of CP cable attenuation (dB/m) to fixed horizontal cable attenuation (dB/m) (see Clause 13)
n	2 for Configurations A, B and D
n	3 for Configuration C

Table A.16 – Informative d.c. loop resistance for permanent link with maximum implementation

Maximum d.c. loop resistance Ω					
Class A	**Class B**	**Class C**	**Class D**	**Class E**	**Class F**
530	140	34	21	21	21

A.2.8 Direct current (d.c.) resistance unbalance

The d.c. resistance unbalance between the two conductors within all pairs of a permanent link or CP link shall not exceed 3 % for all classes. This shall be achieved by design.

A.2.9 Propagation delay

The propagation delay of each pair of a permanent link or CP link shall meet the requirements derived by the equation in Table A.17.

A practical method of establishing conformant link performance is to demonstrate that the margin between the measured value and the channel limits of Table 17 are adequate to accommodate any additional cabling components used to create a channel. This is fulfilled if the insertion loss requirement and the delay skew requirement for the permanent link or CP link are met.

The propagation delay of each pair of a permanent link with maximum implementation is given in Table A.18.

The propagation delay shall be consistent with the cabling components used.

When required, the propagation delay shall be measured according to IEC 61935-1.

Copyright International Organization for Standardization
Provided by IHS under license with ISO
No reproduction or networking permitted without license from IHS Not for Resale

Table A.17 – Propagation delay for permanent link or CP link

Class	Frequency MHz	Maximum propagation delay µs
A	$f = 0{,}1$	19,400
B	$0{,}1 \le f \le 1$	4,400
C	$1 \le f \le 16$	$(L/100) \times (0{,}534 + 0{,}036/\sqrt{f}) + n \times 0{,}002\,5$
D	$1 \le f \le 100$	$(L/100) \times (0{,}534 + 0{,}036/\sqrt{f}) + n \times 0{,}002\,5$
E	$1 \le f \le 250$	$(L/100) \times (0{,}534 + 0{,}036/\sqrt{f}) + n \times 0{,}002\,5$
F	$1 \le f \le 600$	$(L/100) \times (0{,}534 + 0{,}036/\sqrt{f}) + n \times 0{,}002\,5$

NOTE

L $L_{FC} + L_{CP}$

L_{FC} length of fixed cable (m)

L_{CP} length of CP cord (where present) (m)

n 2 for configurations A, B and D

n 3 for configuration C

Table A.18 – Informative propagation delay values for permanent link with maximum implementation at key frequencies

Frequency MHz	Maximum propagation delay µs					
	Class A	Class B	Class C	Class D	Class E	Class F
0,1	19,400	4,400	N/A	N/A	N/A	N/A
1	N/A	4,400	0,521	0,521	0,521	0,521
16	N/A	N/A	0,496	0,496	0,496	0,496
100	N/A	N/A	N/A	0,491	0,491	0,491
250	N/A	N/A	N/A	N/A	0,490	0,490
600	N/A	N/A	N/A	N/A	N/A	0,489

A.2.10 Delay skew

The delay skew between all pairs of a permanent link or CP link shall meet the requirements derived by the equation in Table A.19.

A practical method of establishing a conformant link performance is to demonstrate that the margin between the measured value and the channel limits of Table A.19 are adequate to accommodate any additional cabling components used to create a channel. This is fulfilled if the insertion loss requirement and the delay skew requirement for the permanent link or CP link are met.

The delay skew between all pairs of a permanent link with maximum implementation is given in Table A.20.

The delay skew shall be consistent with the cabling components used.

When required, the delay skew shall be measured according to IEC 61935-1.

Copyright International Organization for Standardization
Provided by IHS under license with ISO
No reproduction or networking permitted without license from IHS Not for Resale

Table A.19 – Delay skew for permanent link or CP link

Class	Frequency MHz	Maximum delay skew µs
A	$f = 0{,}1$	N/A
B	$0{,}1 \le f \le 1$	N/A
C	$1 \le f \le 16$	$(L/100) \times 0{,}045 + n \times 0{,}001\,25$
D	$1 \le f \le 100$	$(L/100) \times 0{,}045 + n \times 0{,}001\,25$
E	$1 \le f \le 250$	$(L/100) \times 0{,}045 + n \times 0{,}001\,25$
F	$1 \le f \le 600$	$(L/100) \times 0{,}025 + n \times 0{,}001\,25$

NOTE

L $L_{FC} + L_{CP}$

L_{FC} length of fixed cable (m)

L_{CP} length of CP cord (where present) (m)

n 2 for configurations A, B and D

n 3 for configuration C

Table A.20 – Informative delay skew for permanent link with maximum implementation

Class	Frequency MHz	Maximum delay skew µs
A	$f = 0{,}1$	N/A
B	$0{,}1 \le f \le 1$	N/A
C	$1 \le f \le 16$	0,044 [a]
D	$1 \le f \le 100$	0,044 [a]
E	$1 \le f \le 250$	0,044 [a]
F	$1 \le f \le 600$	0,026 [b]

[a] This is the result of the calculation 0,9*0,045+3 × 0,001 25.

[b] This is the result of the calculation 0,9*0,025+3 × 0,001 25.

--`,,```,,,,````-`-`,,`,,`,`,,`---

Copyright International Organization for Standardization
Provided by IHS under license with ISO
No reproduction or networking permitted without license from IHS Not for Resale

Annex B
(normative)

Test procedures

B.1 General

This annex on test procedures is divided into four parts. B.1 gives general information. B.2 gives references to test procedures for installed cabling and for cabling in laboratory environment. B.3 gives references to test procedures for prefabricated cords. B.4 gives references to test procedures for individual components.

B.2 Channel and link performance testing

B.2.1 Testing balanced cabling channels, permanent links and CP links

The test procedures for balanced cabling installations are specified in IEC 61935-1

B.2.2 Testing optical fibre cabling channels

The test procedures for optical cabling installations are specified in ISO/IEC TR 14763-3.

NOTE If test methods for some parameters are missing in the referenced standard, they can be found in the optical cable standards IEC 60794-1 or IEC 60793-1-XX.

B.2.3 Channel and link test schedules

Channels and links are normally tested for compliance with the specified requirements after installation. For these tests 'in field' test instruments are available. The channels and permanent links may also be tested in laboratory environments. This is in order to prove compliance for systems made up of specific components. These tests may use laboratory equipment or field test equipment. Tests using laboratory test instruments, which are carried out according to international standards, may be reference tests which can be used to evaluate the accuracy of field test equipment.

NOTE If field testers are not available for testing of certain classes of cabling, laboratory equipment can be used. For testing parameters, which require access to both ends of the installed cabling, laboratory equipment is not practical. It is recommended that this cabling is installed in such a way that only acceptance testing (see the definition below) is required.

The different kinds of testing may be classified as follows:

a) Acceptance testing

   As a means of validating installed cabling, which is known to comply with the implementation requirements of this standard and which is made up of elements complying with the performance requirements for components for the relevant categories.

b) Compliance testing

   As a means of validating installed cabling, comprising known or unknown components.

c) Reference testing

   As a means for testing cabling models in laboratory environment and for comparing the result of measurements performed with laboratory and field test instruments. Reference testing in laboratory on cabling models is also used for verifying compliance for properties, which cannot be tested in field.

--`,,```,,,,````-`-`,,`,,`,`,,`---

Copyright International Organization for Standardization
Provided by IHS under license with ISO
No reproduction or networking permitted without license from IHS Not for Resale

In Table B.1, the type of test to be carried out for each channel or permanent link is indicated by an "I" (informative) or "N" (normative). Parameters, which are computed from the measured parameters, are indicated by a "C". The tests indicated by “I” may be carried out as part of an acceptance test. The tests indicated by “N” shall be carried out as part of an acceptance, reference or compliance test.

Table B.1 – Cabling characteristics of copper and optical fibre cabling for acceptance, compliance and reference testing

Characteristics of copper cabling	Testing for		
	Acceptance	Compliance	Reference
Return loss	I	N	N
Insertion loss	I	N	N
NEXT	I	N	N
PS NEXT	C	C	C
ACR	I	N	N
PS ACR	I	C	C
ELFEXT	I	N	N
PS ELFEXT	C	C	C
DC loop resistance	I	N	N
Propagation delay	I	N	N
Skew	I	N	N
Unbalance attenuation, near end (TCL)			N
Coupling attenuation			f.f.s.
Length [a]	I	I	N
Wiremap	N	N	N
Continuity of conductors, screens (if applicable), short and open circuits	N	N	N
[a] Length is not a pass/fail criterion			

Characteristics of optical fibre cabling	Testing for		
	Acceptance	Compliance	Reference
Optical attenuation	N	N	N
Multimode modal bandwidth			N
Propagation delay	I	N	N
Length	C	C	C
Continuity and maintenance of polarity	N	N	N

Cabling characteristics to be tested for acceptance, compliance and reference shall meet or exceed the requirements outlined in 6.4 for balanced cabling and in Clause 8 for optical cabling.

B.3 Transmission testing of cords for balanced cabling

Testing of cords for balanced cabling shall be performed according to IEC 61935-2.

--`,,```,,,,````-`-`,,`,,`,`,,`---

Copyright International Organization for Standardization
Provided by IHS under license with ISO
No reproduction or networking permitted without license from IHS Not for Resale

B.4 Transmission testing of components for cabling

B.4.1 Transmission testing of copper cables for balanced cabling

Testing of cables for balanced cabling shall be performed according to IEC 61156-1.

B.4.2 Transmission testing of connecting hardware for balanced cabling

Testing of connecting hardware for balanced cabling shall be performed according to the relevant part of IEC 60603-7. If connecting hardware is used that is not covered by the IEC 60603-7 series, it shall be tested according to the relevant specification.

B.4.3 Transmission testing of cables for optical cabling

Testing of cables for optical cabling shall be performed according to the IEC 60794-2 series for indoor cables and the IEC 60794-3 series for outdoor cables.

B.4.4 Transmission testing of connectors for optical cabling

Testing of connectors for optical cabling shall be performed according to IEC 61300-3-34.

--`,,```,,,,````-`-`,,`,,`,`,,`---

Copyright International Organization for Standardization
Provided by IHS under license with ISO
No reproduction or networking permitted without license from IHS Not for Resale

Annex C
(normative)

Mechanical and environmental performance testing of connecting hardware for balanced cabling

C.1 Introduction

The mechanical and environmental performance of connecting hardware is vital to the cabling system. Changes in contact resistance because of operational and environmental stress can negatively affect the transmission characteristics of the cabling system. Product life testing is accomplished by subjecting the product to a number of mechanical and environmental conditions and measuring any resistance deviations at prescribed intervals and after completion of each conditioning sequence. In addition, the product shall not show evidence of degradation with respect to the ease of mechanical termination, safety or other functional attributes at any time during or after environmental conditioning.

To ensure that all connecting hardware for balanced cabling systems will perform reliably under field installation conditions, it shall be capable of maintaining reliable connections throughout the series of environmental conditioning and testing illustrated in Table C.2 to Table C.5. Products under test shall be mounted and connected in accordance with manufacturer's guidelines. Unless otherwise specified, tests should be carried out under standard atmospheric conditions in accordance with 5.3.1 of IEC 60068-1.

NOTE 1 This annex provides mechanical connection performance requirements for connections that are not covered by a specific IEC connector standard. It is intended to replace the specifications in this annex by reference to international standards, as they become available.

NOTE 2 Connection interfaces that conform to the mechanical and environmental performance requirements of IEC 60603-7 (unscreened) or IEC 60603-7-1 (screened) are exempt from this annex. Connection interfaces that are covered by international standards other than the IEC 60603-7 series shall comply with at least the equivalent mechanical and environmental performance requirements specified in this annex.

C.2 Test requirements

C.2.1 General

This test schedule shows all tests and the order in which they shall be carried out, as well as the requirements to be met.

Unless otherwise specified, connecting hardware shall be tested in the mated or terminated state. Care shall be taken to keep a particular combination of connecting hardware together during the complete test sequence. That is, when unmating is necessary for a certain test, the same connecting hardware shall be mated for the subsequent tests.

Hereinafter, mated/terminated connecting hardware is called the "specimen".

For each group, a minimum of 10 product samples shall be used to compile data for supporting a conclusion that pass criteria are satisfied.

C.2.2 Initial test measurements

All specimens shall be subjected to the measurements and sequence shown in Table C.1.

--`,,```,,,,````-`-`,,`,,`,`,,`---

Copyright International Organization for Standardization
Provided by IHS under license with ISO
No reproduction or networking permitted without license from IHS Not for Resale

Table C.1 – Group P

Test phase	Test			Measurement to be performed		
	Title	IEC 60512 Test No.	Severity or condition of test	Title	IEC 60512 Test No.	Requirements
P 1	General examination	1		Visual examination	1a	There shall be no defects that would impair normal operation
				Examination of dimensions and mass	1b	The dimensions shall comply with those specified in the detail specification
P 2	Polarization (if applicable)					
P 3	Contact resistance		All signal contacts and screen/specimens (bulk resistance subtracted)	Millivolt level method	2a	Contact resistance = 20 mΩ maximum
P 4			Test voltage 100 V ± 15 V d.c. Method A Mated or terminated connectors	Insulation resistance	3a	500 MΩ minimum
P 5			Contact/contact Method A Mated or terminated connectors	Voltage proof	4a	1 000 V d.c. or a.c. peak
			All contacts to screen: Method A Mated or terminated connectors			1 500 V d.c. or a.c. peak

C.2.3 Environmental and mechanical performance

The specimens shall be divided into four groups, group A, group B, group C and group D. Connecting hardware in each group shall undergo the tests specified in the relevant group.

--`,,```,,,,````-`-`,,`,,`,`,,`---

Copyright International Organization for Standardization
Provided by IHS under license with ISO
No reproduction or networking permitted without license from IHS Not for Resale

Table C.2 – Group A

Test phase	Test			Measurement to be performed		
	Title	IEC 60512 Test No.	Severity or condition of test	Title	IEC 60512 Test No.	Requirements
AP 1	Insertion and withdrawal forces (two piece connectors)	13b	Connector locking device depressed (if applicable)			As per manufacturer's specifications
AP 2	Effectiveness of connector coupling device (if applicable)	15f	Rate of load application 44,5 N/s max.			As per manufacturer's specifications
AP 3	Rapid change of temperature	60068-2-14	–40 °C to 70 °C Mated or terminated connectors 25 cycles *t* = 30 min Recovery time 2 h			
AP 4			Test voltage 100 V ± 15 V d.c. Method A Mated or terminated connectors	Insulation resistance	3a	500 MΩ min.
AP 5			All signal contacts and screen/specimens (bulk resistance subtracted)	Contact resistance	2a	20 mΩ max change from initial
AP 6			Contact/contact: Method A Mated or terminated connectors	Voltage proof	4a	1 000 V d.c. or a.c. peak
			All contacts to screen: Method A Mated or terminated connectors			1 500 V d.c. or a.c. peak
AP 7			Unmated or unterminated connectors	Visual examination	1a	There shall be no defects that would impair normal operation
AP 8	Cyclic damp heat	60068-2-38	21 cycles low temperature 25 °C high temperature 65 °C cold subcycle –10 °C humidity 93 % Half of the samples in mated or terminated state Half of the samples in unmated or unterminated state			
AP 9			All signal contacts and screen/specimens (bulk resistance subtracted)	Contact resistance	2a	20 mΩ max change from initial
AP 10	Insertion and withdrawal forces (two piece connectors)	13b	Connector locking device depressed (if applicable)			As per manufacturer's specification
AP 11	Effectiveness of connector coupling device (if applicable)	15f	Rate of load application 44,5 N/s (10 lbf/s) max.			As per manufacturer's specification
AP 12			Unmated or unterminated connectors	Visual examination	1a	There shall be no defects that would impair normal operation

--`,,```,,,,````-`-`,,`,,`,`,,`---

Copyright International Organization for Standardization
Provided by IHS under license with ISO
No reproduction or networking permitted without license from IHS Not for Resale

Table C.3 – Group B

Test phase	Test			Measurement to be performed		
	Title	IEC 60512 Test No.	Severity or condition of test	Title	IEC 60512 Test No.	Requirements
BP 1	Locking device mechanical operations (if applicable)		Mechanical operations			As per manufacturer's specification, but equivalent to *N* = 200 insertions and withdrawals
BP 2	Mechanical operations	9a	*N*/2 operations Speed 10 mm/s rest 5 s (two piece connectors). Locking device inoperative			*N* = 200
BP 3	Flowing mixed gas corrosion	11-7	4 days Half of the samples in mated or terminated state Half of the samples in unmated or unterminated state			Mixture of gases: SO_2 = (0,5 ± 0,1) 10^{-6} (vol/vol) H_2S = (0,1 ± 0,02) 10^{-6} (vol/vol) Temperature: (25 ± 2) °C Relative humidity: (75 ± 3) %
BP 4			All signal contacts and screen / specimens (bulk resistance subtracted)	Contact resistance	2a	20 mΩ maximum change from initial
BP 5	Mechanical operations	9a	N/2 operations Speed 10 mm/s. Rest 5 s (two piece connectors). Locking device inoperative			
BP 6			All signal contacts and screen / specimens	Contact resistance	2a	20 mΩ maximum change from initial
BP 7			100 V ± 15 V d.c. Method A Mated or terminated connectors	Insulation resistance	3a	500 MΩ Min.
BP 8			Contact/contact: Method A Mated or terminated connectors	Voltage proof	4a	1 000 V d.c. or a.c. peak
			All contacts to screen: Method A Mated or terminated connectors			1 500 V d.c. or a.c. peak
BP 9				Visual examination	1a	There shall be no defects that would impair normal operation

Copyright International Organization for Standardization
Provided by IHS under license with ISO
No reproduction or networking permitted without license from IHS Not for Resale

Table C.4 – Group C

Test phase	Test			Measurement to be performed		
	Title	IEC 60512 Test No.	Severity or condition of test	Title	IEC 60512 Test No.	Requirements
CP 1	Vibration	11c	Measurement points as per manufacturer's specification	Contact disturbance	2e	10 µs max.
CP 2			Test voltage 100 V d.c. Method A Mated or terminated connectors	Insulation resistance	3a	500 MΩ min.
CP 3			All signal contacts and screen/specimens (bulk resistance subtracted)	Contact resistance	2a	20 mΩ max. change from initial
CP 4			Unmated or unterminated connectors	Visual examination	1a	There shall be no defects that would impair normal operation

Table C.5 – Group D

Test phase	Test			Measurement to be performed		
	Title	IEC 60512 Test No.	Severity or condition of test	Title	IEC 60512 Test No.	Requirements
DP 1	Electrical load and temperature	9b	5 connectors 500 h, 70 °C Recovery period 2 h			0,5A, 5 connectors No current, 5 connectors
DP 2			Test voltage 100 V d.c. Method A Mated or terminated connectors	Insulation resistance	3a	500 MΩ min.
DP 3			Contact/contact: Method A Mated or terminated connectors	Voltage proof	4a	1 000 V d.c. or a.c. peak
			All contacts to screen: Method A Mated or terminated connectors			1 500 V d.c. or a.c. peak
DP 4			Unmated or unterminated connectors	Visual examination	1a	There shall be no defects that would impair normal operation
DP 5			All signal contacts and screen / specimens (bulk resistance subtracted)	Contact resistance	1a	20 mΩ max. change from initial

Copyright International Organization for Standardization
Provided by IHS under license with ISO
No reproduction or networking permitted without license from IHS
Not for Resale

Annex D
(informative)

Electromagnetic characteristics

Cabling consists of passive components and can therefore only be verified for conformance to electromagnetic compliance (CISPR 22 and CISPR 24) when attached to application specific equipment. However, electromagnetic characteristics of a network installation are influenced by parameters, such as the balance and/or screening properties of the cabling.

Balance is characterised by unbalance attenuation, i.e. the ratio between the unwanted common mode signal power and the injected differential mode signal power. This common mode signal which arises from imperfections in the cabling system, such as asymmetry, causes electromagnetic emission and affects noise immunity. Unbalance attenuation is characterised for components, including cables and connecting hardware. Limits for unbalance attenuation are also given for cabling. Unbalance attenuation test methods for components are well established for frequencies up to 100 MHz.

Screening effectiveness is characterised for components including cables, connecting hardware and patch cords. At frequencies up to about 30 MHz, the effectiveness of component screening can be characterised by transfer impedance. Transfer impedance is the ratio of the longitudinal voltage developed on the secondary side of a screen to the current flowing in the screen. This unwanted current causes radiation and affects immunity. At higher frequencies screening effectiveness may be characterised by screening attenuation, i.e. the ratio between the common mode signal in the conductors enclosed in the screen and the radiated signal outside the screen.

Balance and screening effectiveness properties may be combined in one parameter, coupling attenuation, which is the ratio between the wanted signal power and the unwanted radiated power from the cabling. Coupling attenuation is normally measured from 30 MHz to 1 000 MHz.

Coupling attenuation can be applied to screened and unscreened cables, connecting hardware and cabling.

Test methods and requirements for components have been developed. Characterisation of coupling attenuation for cabling is a subject for further study.

Use of components with good electromagnetic characteristics, the use of screened or unscreened components throughout a system, and installation according to manufacturers' instructions, will help to achieve good electromagnetic characteristics of the cabling.

The electromagnetic characteristics of the components referenced in this standard may be used for guidance when application specific electronic equipment is constructed, and tested for compliance with CISPR 22 and CISPR 24. The relationship between the CISPR requirements and these characteristics is a subject for further study.

Copyright International Organization for Standardization
Provided by IHS under license with ISO
No reproduction or networking permitted without license from IHS Not for Resale

Annex E
(informative)

Acronyms for balanced cables

There is a great variety of cable constructions and a number of systems to describe these constructions in a shortened form. These abbreviations have been used to describe the difference in construction as well the difference in impedance. Since such acronyms are used in many commercial documents and have never been clearly specified by a standard, the same term could mean different kinds of constructions in different contexts.

The intention of this annex is to clarify this situation and give guidance on how to use abbreviations for the main constructions used for communication cables. This document uses the words balanced cable, unscreened/screened cable and unscreened/screened cable element for the cable constructions described in this annex.

To reduce confusion, a more systematic naming is specified in Figure E.1. It is understood that cable names based on this schema only describe the types of constructions and not any transmission characteristics such as impedance. All screened cables, whether individually or overall, foiled, braided or both, require matching connecting hardware capable of handling all of the screens involved.

Figure E.2 gives examples of cable constructions and their names based on this schema.

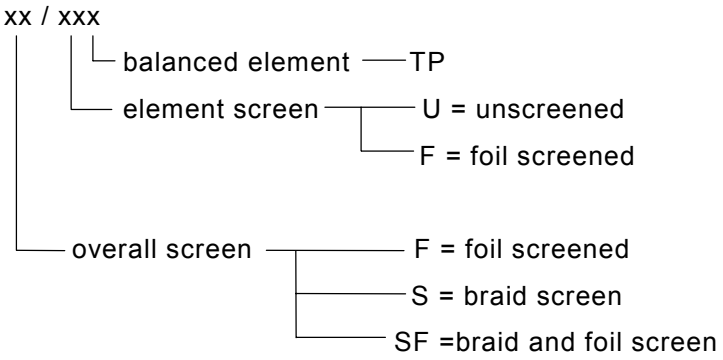

For example:

SF/UTP = overall braid and foil screened cable with unscreened balanced elements

S/FTP = overall braid screened cable with foil screened balanced elements

Figure E.1 – Cable naming schema

Copyright International Organization for Standardization
Provided by IHS under license with ISO
No reproduction or networking permitted without license from IHS
Not for Resale

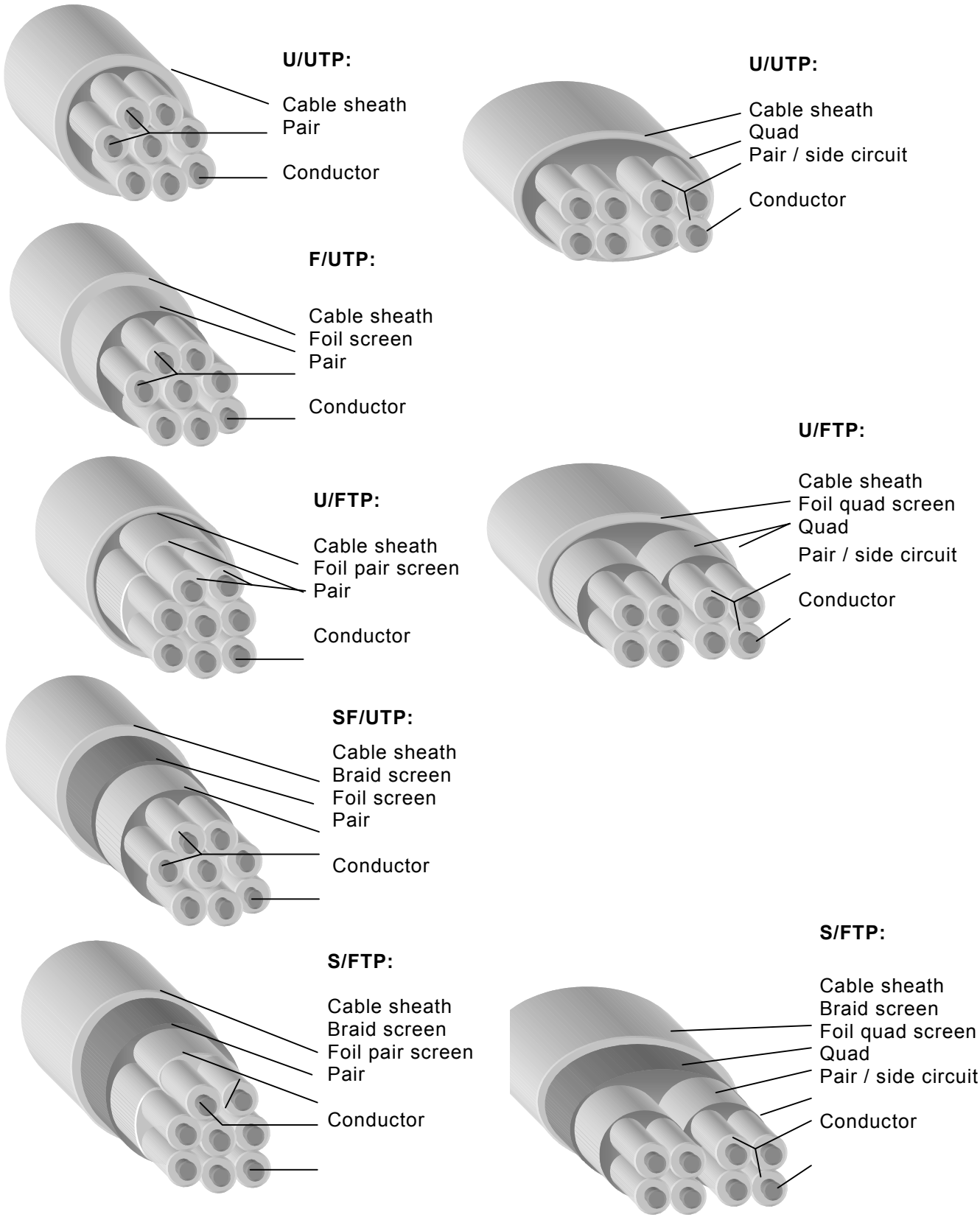

NOTE Sometimes the letter P in the abbreviation is replaced by Q to characterise a quad construction.

Figure E.2 – Cable types

Copyright International Organization for Standardization
Provided by IHS under license with ISO
No reproduction or networking permitted without license from IHS
Not for Resale

Annex F
(informative)

Supported applications

F.1 Supported applications for balanced cabling

Balanced cabling specified in this International Standard is intended to support the applications detailed in this Annex. Other applications, not listed, may be supported too.

Balanced cabling applications are matched to channel performance classes specified in Clause 6 of this standard. Generic cabling has been designed to support optical and electrically balanced transmission. Applications using unbalanced transmission are outside the scope of this standard.

Table F.1 contains applications with mature or technically stable international specifications (for example, published ITU recommendations, ATM Forum specifications or ISO/IEC standards or at least DIS status at ISO/IEC).

--`,,```,,,,````-`-`,,`,,`,`,,`---

Copyright International Organization for Standardization
Provided by IHS under license with ISO
No reproduction or networking permitted without license from IHS Not for Resale

Table F.1 – Applications using balanced cabling

Application	Specification reference	Date	Additional name
Class A (defined up to 100 kHz)			
PBX	National requirements		
X.21	ITU-T Rec. X.21	1994	
V.11	ITU-T Rec. X.21	1994	
Class B (defined up to 1 MHz)			
S0-Bus (extended)	ITU-T Rec. I.430	1993	ISDN Basic Access (Physical Layer)
S0 Point-to-Point	ITU-T Rec. I.430	1993	ISDN Basic Access (Physical Layer)
S1/S2	ITU-T Rec. I.431	1993	ISDN Primary Access (Physical Layer)
CSMA/CD 1BASE5	ISO/IEC 8802-3	2000	Starlan
Class C (defined up to 16 MHz)			
CSMA/CD 10BASE-T	ISO/IEC 8802-3	2000	
CSMA/CD 100BASE-T4	ISO/IEC 8802-3	2000	Fast Ethernet
CSMA/CD 100BASE-T2	ISO/IEC 8802-3	2000	Fast Ethernet
Token Ring 4 Mbit/s	ISO/IEC 8802-5	1998	
ISLAN	ISO/IEC 8802-9	1996	Integrated Services LAN
Demand priority	ISO/IEC 8802-12	1998	VGAnyLAN ™
ATM LAN 25,60 Mbit/s	ATM Forum af-phy-0040.000	1995	ATM-25/Category 3
ATM LAN 51,84 Mbit/s	ATM Forum af-phy-0018.000	1994	ATM-52/Category 3
ATM LAN 155,52 Mbit/s	ATM Forum af-phy-0047.000	1995	ATM-155/Category 3
Class D (defined up to 100 MHz)			
CSMA/CD 100BASE-TX	ISO/IEC 8802-3	2000	Fast Ethernet
CSMA/CD 1000BASE-T	ISO/IEC 8802-3	2000	Gigabit Ethernet
Token Ring 16 Mbit/s	ISO/IEC 8802-5	1998	
Token Ring 100 Mbit/s	ISO/IEC 8802-5	2001	
TP-PMD	ISO/IEC FCD 9314-10	2000	Twisted-Pair Physical Medium Dependent
ATM LAN 155.52 Mbit/s	ATM Forum af-phy-0015.000	1994	ATM-155/Category 5
Class E (defined up to 250 MHz)			
ATM LAN 1.2 Gbit/s	ATM Forum af-phy-0162.000	2001	ATM-1200/Category 6

Applications supported by generic balanced cabling listed in Table F.1 use the pin assignment recorded in Table F.2. This mapping relates the modular connector pinning specified by each application standard to the channel performance classes specified in Clause 6.

Copyright International Organization for Standardization
Provided by IHS under license with ISO
No reproduction or networking permitted without license from IHS Not for Resale

Table F.2 – Modular connector pin assignment for applications

Application	Pins 1 & 2	Pins 3 & 6	Pins 4 & 5	Pins 7 & 8
PBX	Class A [a]	Class A [a]	Class A	Class A [a]
X.21		Class A	Class A	
V.11		Class A	Class A	
S0-Bus (extended)	[b]	Class B	Class B	[b]
S0 Point-to-Point	[b]	Class B	Class B	[b]
S1/S2	Class B	[c]	Class B	[b]
CSMA/CD 1BASE5	Class B	Class B		
CSMA/CD 10BASE-T	Class C	Class C		
Token Ring 4 Mbit/s		Class C	Class C	
ISLAN	Class C	Class C		[b]
Demand Priority	Class C	Class C	Class C	Class C
ATM-25 Category 3	Class C			Class C
ATM-51 Category 3	Class C			Class C
ATM -155 Category 3	Class C			Class C
Token Ring 16 Mbit/s		Class D	Class D	
TP-PMD	Class D			Class D
ATM-155 Category 5	Class D			Class D
CSMA/CD 100BASE-T4	Class C	Class C	Class C	Class C
CSMA/CD 100BASE-T2	Class C	Class C		
CSMA/CD 100BASE-TX	Class D	Class D		
Token Ring 100 Mbit/s		Class D	Class D	
CSMA/CD 1000BASE-T	Class D	Class D	Class D	Class D
ATM-1200 Category 6	Class E	Class E	Class E	Class E

[a] Option dependent on supplier.

[b] Optional power sources.

[c] Option for continuity of cable screen.

F.2 Supported applications for optical fibre cabling

Optical fibre cabling specified in this International Standard is intended to support the applications detailed in this Annex. Other applications, not listed, may also be supported.

Optical fibre cabling applications are correlated to channel performance classes specified in Clause 8. Table F.3 contains applications with mature or technically stable international specifications (for example, published ITU recommendations, ATM Forum specifications or ISO/IEC standards or at least DIS status at ISO/IEC). Table F.3 also contains emerging applications being prepared as future international standards.

Details of application support are provided for each optical fibre type included in Clause 9, and additional information is provided in Table F.4 and Table F.6 concerning maximum channel lengths. Fibre types OM1, OM2, OM3 and OS1 are described in Clause 9.

Maximum channel lengths assume 1,5 dB total connecting hardware attenuation within a channel.

Copyright International Organization for Standardization
Provided by IHS under license with ISO
No reproduction or networking permitted without license from IHS Not for Resale

Copyright International Organization for Standardization
Provided by IHS under license with ISO
No reproduction or networking permitted without license from IHS
Not for Resale

Table F.3 – Supported applications using optical fibre cabling

Network Application	Max. channel insertion loss (dB)			ISO/IEC 11801 Channel supported on							
	Multimode [a]		Single-mode	OM1 optical fibre		OM2 optical fibre		OM3 optical fibre		OS1 optical fibre	
	850 nm	1 300 nm	1 310 nm	850 nm	1 300 nm	850 nm	1 300 nm	850 nm	1 300 nm	1 310 nm	1 550 nm
ISO/IEC 8802-3: 10BASE-FL, FP [b] & FB [f]	12,5(6,8)	–	–	OF-2000		OF-2000		OF-2000			
ISO/IEC TR 11802-4: 4 & 16 Mbit/s Token Ring [f]	13,0(8,0)	–	–	OF-2000		OF-2000		OF-2000			
ATM @ 52 Mbit/s [g]	NA	10,0(5,3)	10,0		OF-2000		OF-2000		OF-2000	OF-2000	
ATM @ 155 Mbit/s [g]	7,2	10,0(5,3)	7,0	OF-500	OF-2000	OF-500	OF-2000	OF-500	OF-2000	OF-2000	
ATM @ 622 Mbit/s [e, f, g]	4,0	6,0(2,0)	7,0	OF-300	OF-500	OF-300	OF-500	OF-300	OF-500	OF-2000	
ISO/IEC 14165-111: Fibre Channel (FC-PH) @ 133 Mbit/s [c, f]	NA	6,0			OF-2000		OF-2000		OF-2000		
ISO/IEC 14165-111: Fibre Channel (FC-PH) @ 266 Mbit/s [c, g]	12,0	6,0(5,5)	6,0	OF-2000	OF-2000	OF-2000	OF-2000	OF-2000	OF-2000	OF-2000	
ISO/IEC 14165-111: Fibre Channel (FC-PH) @ 531 Mbit/s [c, g]	8,0	–	14,0	OF-500		OF-500		OF-500		OF-2000	
ISO/IEC 14165-111: Fibre Channel (FC-PH) @1 062 Mbit/s [e, g]	4,0	–	6,0	OF-300		OF-500		OF-500		OF-2000	
ISO/IEC 8802-3: 1000BASE-SX [e]	2,6(3,56)	–	–	[h]		OF-500		OF-500			
ISO/IEC 8802-3: 1000BASE-LX [e, g]	–	2,35	4,56		OF-500		OF-500		OF-500	OF-2000	
ISO/IEC 9314-9: FDDI LCF-PMD [b, f]	–	7,0(2,0)	–		OF-500		OF-500		OF-500		
ISO/IEC 9314-3: FDDI PMD [f]	–	11,0(6,0)	–		OF-2000		OF-2000		OF-2000		
ISO/IEC 9314-4: FDDI SMF-PMD [g]	–	–	10,0							OF-2000	
ISO/IEC 8802-3: 100BASE-FX [f]		11,0(6,0)	–		OF-2000		OF-2000		OF-2000		
IEEE 802.3: 10GBASE-LX4 [d]		2,00	6,20		OF-300		OF-300		OF-300	OF-2000	
IEEE 802.3: 10GBASE-ER/EW [d]											OF-2000
IEEE 802.3: 10GBASE-SR/SW [d]	1,60 (62,5) 1,80 (OM-2 50) 2,60 (OM-3)	–	–					OF-300			
IEEE 802.3: 10GBASE-LR/LW [d, g]	–	–	6,20							OF-2000	

[a] The values shown are for both 62,5/125 and 50/125 MMF, where the values differ the 50/125 values are shown in parentheses.
[b] An application, while still referenced, is no longer supported by industry.
[c] An application, while still referenced, has been discontinued by the original formulating group.
[d] Application under development.
[e] A bandwidth-limited application at the channel lengths shown. The use of lower attenuation components to produce channels exceeding the values shown cannot be recommended.
[f] The channel length may be limited on 50 μm optical fibre. See the relevant application standard for details.
[g] The channel length on single-mode optical fibre may be longer but lies outside the scope of this standard. See the relevant application standard for details.
[h] See Table F.4.

Table F.4 – Maximum channel lengths supported by optical fibre applications for multimode fibre

Network application	Nominal transmission wavelength nm	Maximum channel length m	
		50 µm fibre [a]	62,5 µm fibre [b]
ISO/IEC 8802-3: FOIRL	850	514	1 000
ISO/IEC 8802-3:10BASE-FL & FB	850	1 514	2 000
ISO/IEC TR 11802-4: 4 & 16 Mbit/s Token Ring	850	1 857	2 000
ATM at 155 Mbit/s	850	1 000 [a]	1 000 [b]
ATM at 622 Mbit/s	850	300 [a]	300 [b]
ISO/IEC 14165-111: Fibre Channel (FC-PH) at 266 Mbit/s	850	2 000	700
ISO/IEC 14165-111: Fibre Channel (FC-PH) at 531 Mbit/s	850	1 000	350
ISO/IEC 14165-111: Fibre Channel (FC-PH) at 1 062 Mbit/s [c]	850	500 [a]	300 [b]
IEEE 802.3: 1000BASE-SX	850	550 [a]	275 [b]
ISO/IEC 9314-9: FDDI LCF-PMD	1 300	500	500
ISO/IEC 9314-3: FDDI PMD	1 300	2 000	2 000
ISO/IEC 8802-3: 100BASE-FX	1 300	2 000	2 000
IEEE 802.5t: 100 Mbit/s Token Ring	1 300	2 000	2 000
ATM at 52 Mbit/s	1 300	2 000	2 000
ATM at 155 Mbit/s	1 300	2 000	2 000
ATM at 622 Mbit/s	1 300	330	500
ISO/IEC 14165-111: Fibre Channel (FC-PH) at 133 Mbit/s	1 300	Not supported	1 500
ISO/IEC 14165-111: Fibre Channel (FC-PH) at 266 Mbit/s	1 300	2 000	1 500
IEEE 802.3: 1000BASE-LX [c]	1 300	550 [a]	550 [b]

[a] Maximum attenuation per km (850 nm / 1 300 nm): 3,5/1,5 dB/km;
minimum modal bandwidth (850 nm / 1 300 nm): 500 MHzkm / 500 MHzkm min,

[b] Maximum attenuation per km (850 nm/1 300 nm): 3,5 / 1,5 dB/km;
minimum modal bandwidth (850 nm / 1 300 nm): 200 MHzkm / 500 MHzkm.

[c] These applications are bandwidth limited at the channel lengths shown. The use of lower attenuation components to produce channels exceeding the values shown cannot be recommended.

Copyright International Organization for Standardization
Provided by IHS under license with ISO
No reproduction or networking permitted without license from IHS
Not for Resale

Table F.5 – Maximum channel length supported by optical fibre applications for single-mode fibres

Network application	Nominal transmission wavelength nm	Maximum channel length m
ISO/IEC 9314-4: FDDI SMF-PMD	1 310	2 000
ATM at 52 Mbit/s	1 310	2 000
ATM at 155 Mbit/s	1 310	2 000
ATM at 622 Mbit/s	1 310	2 000
ISO/IEC 14165-111: Fibre Channel (FC-PH) at 266 Mbit/s	1 310	2 000
ISO/IEC 14165-111: Fibre Channel (FC-PH) at 531 Mbit/s	1 310	2 000
ISO/IEC 14165-111: Fibre Channel (FC-PH) at 1 062 Mbit/s	1 310	2 000
IEEE 802.3: 1000BASE-LX	1 310	2 000

Copyright International Organization for Standardization
Provided by IHS under license with ISO
No reproduction or networking permitted without license from IHS Not for Resale

Annex G
(informative)

Channel and permanent link models for balanced cabling

G.1 General

The pass/fail limits for defined channel and permanent link cabling configurations depend on the performance of the cabling components used. The channel configurations are described in 5.6. The permanent link configurations, which represent the fixed portion of the cabling, have two possible topologies.

– A connection plus a segment of cable plus a connection (2 connector topology).
– A connection plus a segment of cable plus a connection plus another segment of cable plus another connection (3 connector topology).

This annex includes models and assumptions, which support pass/fail limits for the channel and permanent link test configurations in this standard. These are based on the performance requirements of cable and connecting hardware as specified in IEC standards.

The test limits for the permanent link are designed to be tighter than the channel limits in all cases. This provides reasonable assurance that a channel created by adding compliant patch cords to a previously certified permanent link will meet the applicable performance limits.

NOTE This annex specifically does not address possible fixed test configurations of cabling that are portions of the permanent link configuration that is made into a channel by adding a patch cord at each end. The methods shown in this annex may be used to develop appropriate pass/fail limits for these subsections.

G.2 Insertion loss

G.2.1 Insertion loss of the channel configuration

The pass/fail limit for insertion loss (*IL*) of the channel configuration, for all class types, equals:

– the sum total of the insertion loss (*IL*) of 4 connectors, 90 m of horizontal cable and 10 m of patch cable;
– an allowance for insertion loss deviation.

$$IL_{\mathrm{CH}} = IL_{\mathrm{cable\ 90\ m}} + IL_{\mathrm{cord\ 10\ m}} + 4\ IL_{\mathrm{connector}} + IL_{\mathrm{dev}} \qquad \text{(G.1)}$$

where

IL_{CH} is the pass/fail limit for insertion loss of the channel in dB.

$$IL_{\mathrm{cable\ 90\ m}} = 0{,}9\,\alpha_{\mathrm{cable\ 100\ m}\,\vartheta} \qquad \text{(G.2)}$$

is the insertion loss pass/fail limit for 90 m of horizontal cable in dB. This equals 0,9 times the pass/fail limit for 100 m of solid conductor cable at temperature ϑ °C.

$$IL_{\mathrm{cord\ 10\ m}} = 0{,}1 IL_{\mathrm{cord\ 100\ m}\,\vartheta} = 0{,}15\,\alpha_{\mathrm{cable\ 100\ m}\,\vartheta} \qquad \text{(G.3)}$$

Copyright International Organization for Standardization
Provided by IHS under license with ISO
No reproduction or networking permitted without license from IHS Not for Resale

is the pass/fail limit for 10 m of stranded conductor cable in dB, with insertion loss per unit length that is 50 % higher than solid conductor cable.

$IL_{\text{connector}}$ is the insertion loss pass/fail limit for a single connector in dB.

IL_{dev} is the insertion loss deviation in dB.

NOTE Insertion loss deviation is the result of reflections within the link configuration. The actual insertion loss of the link is the sum total of the insertion losses of the cabling components in the link plus the insertion loss deviation.

Table G.1 – Insertion loss deviation

	Significance of ILD for channel configuration	Estimated
Class C	Insignificant	0 dB (1 MHz to 16 MHz)
Class D	Insignificant	0 dB (1 MHz to 100 MHz)
Class E	Significant, accommodated by reduced total cabling length or use of improved components	1,0 dB at 250 MHz
Class F	Significant, accommodated by reduced total cabling length or use of improved components	2,0 dB at 600 MHz

All cable contributions can be combined, resulting in the following equation:

$$IL_{\text{CH}} = 1{,}05\,\alpha_{\text{cable 100 m }\vartheta} + 4\,IL_{\text{connector}} + IL_{\text{dev}} \qquad \text{(G.4)}$$

G.2.2 Insertion loss of the permanent link configurations

The pass/fail limit for insertion loss (*IL*) of all permanent link tests configurations, for all class types, equals the sum total of the insertion loss performance requirements of the cabling components, assuming maximum length of horizontal cabling and patch cabling and three (3) connectors plus an allowance for insertion loss deviation.

The following equation applies:

$$IL_{\text{PL}} = 0{,}9\,\alpha_{\text{cable 100 m }\vartheta} + 3\,IL_{\text{connector}} + IL_{\text{dev}} \qquad \text{(G.5)}$$

G.2.3 Assumptions for insertion loss

G.2.3.1 Temperature dependence of insertion loss of cable

Insertion loss (*IL*) of twisted-pair cable is sensitive to temperature. The performance requirement for cable is specified at 20 °C. The insertion loss per 100 m at a temperature ϑ °C is:

$$\alpha_{\text{cable 100 m}} = \alpha_{\text{cable100 m}}\left(1 + (\vartheta - 20)\,\frac{\vartheta_\text{coeff}}{100}\right) \qquad \text{(G.6)}$$

where

$\alpha_{\text{cable 100 m }\vartheta}$ is the insertion loss in dB of 100 m cable at temperature ϑ °C;

$\alpha_{\text{cable 100 m}}$ is the insertion loss in dB of 100 m cable at 20 °C;

ϑ_coeff is the temperature coefficient in %/°C.

This equation may be used to compute channel and permanent link test limits at operating temperatures other than 20 °C. Refer to Table 21 and Table 22 for information on temperature coefficient values.

Copyright International Organization for Standardization
Provided by IHS under license with ISO
No reproduction or networking permitted without license from IHS Not for Resale

G.2.3.2 Assumptions for insertion loss of permanent links

The following assumptions are applicable to the channel and permanent link models for insertion loss.

The assumption of 3 connectors in the permanent link is a relaxation when testing a permanent link with only 2 connectors. The channel obtained by adding a compliant patch cord at each end will always result in a compliant channel. However, if cabling is added that includes a consolidation point resulting in a 3 connector permanent link, this new permanent link configuration should be tested again. The *ILD* of the permanent link is less than the *ILD* of the channel.

G.3 NEXT

G.3.1 NEXT of the channel configuration

The pass/fail limit for *NEXT* of the channel configuration, for all class types, is computed by adding as a voltage sum the *NEXT* for cable and twice the *NEXT* for connecting hardware as shown in the following formula:

$$NEXT_{\mathrm{CH}} = -20 \lg \left(10^{\frac{-NEXT_{\text{cable 100 m}}}{20}} + 2 \times 10^{\frac{-NEXT_{\text{connector}}}{20}} \right) \quad \text{(dB)} \qquad \text{(G.7)}$$

where

$NEXT_{\mathrm{CH}}$ is the pass/fail limit for *NEXT* of the channel in dB.

$NEXT_{\text{cable 100 m}}$ is the *NEXT* specified for 100 m cable in dB.

$NEXT_{\text{connector}}$ is the *NEXT* pass/fail limit specified for a single connector in dB.

Only two of four possible connectors at the near end significantly influence the channel *NEXT* performance.

G.3.2 NEXT of the permanent link configurations

The pass/fail limit for *NEXT* of all permanent link configurations, for all class types, equals the voltage sum total of the *NEXT* for cable and once the *NEXT* for connecting hardware as shown in the following formula:

$$NEXT_{\mathrm{PL}} = -20 \lg \left(10^{\frac{-NEXT_{\text{cable 100 m}}}{20}} + 10^{\frac{-NEXT_{\text{connector}}}{20}} \right) \quad \text{(dB)} \qquad \text{(G.8)}$$

where

$NEXT_{\mathrm{PL}}$ is the pass/fail limit for *NEXT* of the permanent link in dB.

Although the permanent link may contain an extra connector (CP), the pass/fail limit computation reflects no additional connector. The impact of the CP is accommodated by using the higher precision model as described in G.3.3.1.

Copyright International Organization for Standardization
Provided by IHS under license with ISO
No reproduction or networking permitted without license from IHS Not for Resale

G.3.3 Assumptions for NEXT

G.3.3.1 Modelling of NEXT with higher precision

The method to compute the pass/fail limits for the channel and permanent links is not a very accurate representation of the *NEXT* that may be expected when using the *NEXT* specifications for cable and connecting hardware. Although the more detailed method of channel and permanent link *NEXT* estimation from cabling component performances will result in more accurate predictions, this model contains also accuracy limitations, as further indicated in G.3.3.2.

The principles of this more detailed method are as follows.

1 For each component in the channel or permanent link, determine the impact of *NEXT*, referred back to the input. This means that a component, not directly at the point of observation will have its *NEXT* improved by the round-trip insertion loss of all the components between itself and the point of observation.

2 Add up all contributions from connectors in a voltage sum (worst case) manner, since with appropriate selection of distances and test frequencies, the phase of *NEXT* can add up in phase.

3 Add up all contributions from segments of cable in a power sum manner, since there is no correlation of phase of *NEXT* contributions.

4 Add up the total of *NEXT* from connectors and *NEXT* from cable in a power sum manner, since there is no correlation between the two.

An example of this method is based on a three connector permanent link configuration, measured from the work area location (with a CP and TO in close proximity). See Figure G.1.

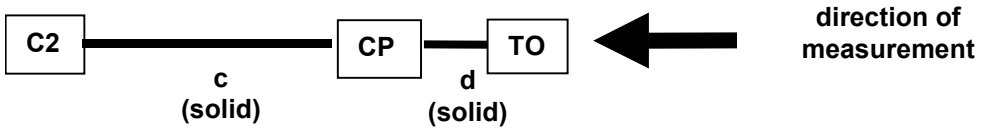

Figure G.1 – Example of computation of NEXT with higher precision

Step 1: Contribution from the TO:

$$NEXT_{\text{connector, TO}} = NEXT_{\text{connector}} \quad \text{(G.9)}$$

where

$NEXT_{\text{connector, TO}}$ is the impact of the NEXT of the TO as seen at the end.

The TO is the component directly connected with the point of observation.

Copyright International Organization for Standardization
Provided by IHS under license with ISO
No reproduction or networking permitted without license from IHS Not for Resale

Step 2: Contribution from cable segment d:

The *NEXT* of a cable segment shorter than 100 m is approximated by (see IEC 61156-1, this equation is used for all lengths):

$$NEXT_{\text{cable, } L} = NEXT_{\text{cable 100 m}} - 10 \lg \left(\frac{1 - 10^{\frac{-IL_{\text{cable, } L}}{5}}}{1 - 10^{\frac{-\alpha_{\text{cable 100 m}}}{5}}} \right) \quad \text{(G.10)}$$

where

$NEXT_{\text{cable, } L}$ is the *NEXT* from a cable segment that is L meters long;

$\alpha_{\text{cable 100 m}}$ is the insertion loss from a cable segment that is 100 m long;

and

$$IL_{\text{cable, } L} = K \frac{L}{100} \alpha_{\text{cable 100 m}}$$

K = 1 for solid conductor cable and K = 1,5 for stranded conductor cable.

Therefore the *NEXT* contribution from cable segment d with length L_d (which is improved by twice the insertion loss of the TO; K = 1) is:

$$NEXT_{\text{cable, d}} = NEXT_{\text{cable 100 m}} - 10 \lg \left(\frac{1 - 10^{\frac{-\frac{L_d}{100}\alpha_{\text{cable 100 m}}}{5}}}{1 - 10^{\frac{-\alpha_{\text{cable 100 m}}}{5}}} \right) + 2IL_{\text{connector}} \text{ (dB)} \quad \text{(G.11)}$$

Step 3: Contribution from the consolidation point connector:

$$NEXT_{\text{connector, CP}} = NEXT_{\text{connector}} + 2\left(IL_{\text{connector}} + \frac{L_d}{100}\alpha_{\text{cable 100 m}} \right) \text{ (dB)} \quad \text{(G.12)}$$

where

$NEXT_{\text{connector, CP}}$ is the impact of the *NEXT* of the CP as seen at the end.

Step 4: Contribution from cable segment c:

$$NEXT_{\text{cable, c}} = NEXT_{\text{cable 100 m}} + 10 \lg \left(\frac{1 - 10^{\frac{-\frac{L_c}{100}\alpha_{\text{cable 100 m}}}{5}}}{1 - 10^{\frac{-\alpha_{\text{cable 100 m}}}{5}}} \right) + 2\left(2\,IL_{\text{connector}} + \frac{L_d}{100}\alpha_{\text{cable 100 m}} \right) \quad \text{(G.13)}$$

--`,,```,,,,````-`-`,,`,,`,`,,`---

Copyright International Organization for Standardization
Provided by IHS under license with ISO
No reproduction or networking permitted without license from IHS
Not for Resale

Step 5: Contribution from the floor distributor connector C2:

$$NEXT_{\text{connector, C2}} = NEXT_{\text{connector}} + 2\left(2\,IL_{\text{connector}} + \frac{\left(L_{\text{d}} + L_{\text{c}}\right)}{100}\,\alpha_{\text{cable 100 m}}\right) \text{ (dB)} \qquad \text{(G.14)}$$

where

$NEXT_{\text{connector, C2}}$ is the impact of the *NEXT* of C2 as seen at the end.

Step 6: Add all NEXT contributions from connectors in a voltage sum manner:

$$NEXT_{\text{connectors, all}} = -20\,\lg\left(10^{\frac{-NEXT_{\text{connector, TO}}}{20}} + 10^{\frac{-NEXT_{\text{connector, CP}}}{20}} + 10^{\frac{-NEXT_{\text{connector, C2}}}{20}}\right) \qquad \text{(G.15)}$$

Step 7: Add all NEXT contributions from cable segments in a power sum manner:

$$NEXT_{\text{cable, all}} = -10\,\lg\left(10^{\frac{-NEXT_{\text{cable, d}}}{10}} + 10^{\frac{-NEXT_{\text{cable, c}}}{10}}\right) \qquad \text{(G.16)}$$

Step 8: Add NEXT contributions from all cable segments and all connectors in a power sum manner:

$$NEXT_{\text{PL, TO}} = -10\,\lg\left(10^{\frac{-NEXT_{\text{cable, all}}}{10}} + 10^{\frac{-NEXT_{\text{connectors, all}}}{10}}\right) \qquad \text{(G.17)}$$

where

$NEXT_{\text{PL, TO}}$ is the *NEXT* of the permanent link, as seen from the TO end.

The same method may be applied for the channel configuration and for all permanent link configurations and from either end.

When the results of this detailed model are compared to the predictions per G.3.2, the simple model is found to be 2 dB to 3 dB pessimistic for Class D and Class E channels and permanent links. This margin is virtually independent of length (for short links the NEXT of the cable is less significant, but the NEXT from far end connectors has more influence; for longer links, these conditions are reversed. In a first approximation, these effects offset each other). For Class F links, the detailed predictions are pessimistic for short channels and permanent links. Therefore, the pass/fail limits for Class F links may not apply when the total insertion loss is below a threshold value as specified in this standard.

Another consequence of the margin in the computed limits is that cabling components may fail their individual requirements, and the installed link using such components may still pass the appropriate link requirements.

Copyright International Organization for Standardization
Provided by IHS under license with ISO
No reproduction or networking permitted without license from IHS Not for Resale

G.3.3.2 Additional assumptions for NEXT

The following assumptions are applicable to the channel and permanent link models for *NEXT*.

– The power sum addition makes assumptions of statistical independence of sources of *NEXT*. There may be some concern that requirements for this assumption are not totally justified.

– Excess NEXT contributions that result from unbalanced signals and differential-to-common and common-to-differential mode coupling are ignored. These can be significant at high frequencies and when balance properties of the cabling are poor.

– Impact from return loss effects along the various signal routes in the link, is ignored. This will likely be a more serious consideration for Class F cabling. There are phenomena that degrade measured performance (excess *NEXT* from *FEXT* combined with return loss effects) and others that improve measured performance (*NEXT* which is reflected back into the cable).

– In cabling with individually screened wire pairs, the NEXT mechanisms are distinctly different. The crosstalk mechanism involves creating a common mode current in the individual screens that surround each wire pair, the transfer impedance of that screen and a common-to-differential model conversion into an adjacent wire pair. Common mode terminations highly affect the resulting crosstalk.

G.4 ELFEXT

G.4.1 ELFEXT of the channel configuration

The pass/fail limit for *ELFEXT* of the channel configuration, for all classes, is computed by adding as a voltage sum the *ELFEXT* for 100 m cable and four times (4) the *FEXT* for connecting hardware as shown in the following formula:

$$ELFEXT_{\mathrm{CH}} = -20 \lg \left(10^{\frac{-ELFEXT_{\mathrm{cable\ 100\,m}}}{20}} + 4 \times 10^{\frac{-FEXT_{\mathrm{connector}}}{20}} \right) \qquad \text{(G.18)}$$

where

$ELFEXT_{\mathrm{CH}}$ is the pass/fail limit for *ELFEXT* of the channel in dB;

$ELFEXT_{\mathrm{cable\,100\,m}}$ is the *ELFEXT* specified for 100 m cable in dB;

$FEXT_{\mathrm{connector}}$ is the *FEXT* pass/fail limit specified for a single connector in dB.

G.4.2 ELFEXT for the permanent link configurations

The pass/fail limit for *ELFEXT* of all permanent link configurations, for all class types, equals the voltage sum total of the *ELFEXT* for 100 m cable and three (3) times the *FEXT* for connecting hardware as shown in the following equation (*FEXT* and insertion loss measurements are significantly affected by all connectors in the permanent link):

$$ELFEXT_{\mathrm{PL}} = -20 \lg \left(10^{\frac{-ELFEXT_{\mathrm{cable\ 100\ m}}}{20}} + 3 \times 10^{\frac{-FEXT_{\mathrm{connector}}}{20}} \right) \text{(dB)} \qquad \text{(G.19)}$$

where $ELFEXT_{\mathrm{PL}}$ is the pass/fail limit for *ELFEXT* of the permanent link in dB.

Copyright International Organization for Standardization
Provided by IHS under license with ISO
No reproduction or networking permitted without license from IHS Not for Resale

G.4.3 Assumptions for ELFEXT

The following assumptions are applicable to the channel and permanent link models for *ELFEXT*:

– *ELFEXT* of a cable segment depends on its length *L* by:

$-10\lg\left(\frac{L}{100}\right)$ (the *ELFEXT* improves as the cable segment is reduced in length).

– This provides a slight measurement margin for a permanent link:

$-10\lg\left(\frac{90}{100}\right) = 0{,}46\ \text{dB}$.

– The method to compute channel and permanent link performance is quite precise as all *FEXT* coupled signals travel approximately the same distance. At high frequencies, delay skew causes phase differences and thereby nulls in the response.

– There is no *ELFEXT* margin present in channels. However, in practice, the *ELFEXT* of cable is generally better than the specified requirements.

– Excess *FEXT* contributions that may be due to unbalanced signals and the resulting cross modal crosstalk coupling are ignored.

– Reflected crosstalk and tertiary crosstalk are ignored.

– The crosstalk mechanism involves cross-modal crosstalk phenomena. Hence, common mode terminations affect the crosstalk coupling substantially.

G.5 Return loss

G.5.1 Return loss of the channel and permanent link configurations

Circuit analysis methods must be used for the most accurate prediction of return loss (*RL*) of channel and permanent link configurations from cable and connecting hardware specifications. The return loss (*RL*) of channels and permanent links is obtained by matrix multiplication of the transmission chain matrices of all components in the channels or permanent links respectively.

$$\begin{bmatrix} \cosh(\gamma L) & Z\sinh(\gamma L) \\ \frac{\sinh(\gamma L)}{Z} & \cosh(\gamma L) \end{bmatrix} \qquad \text{(G.20)}$$

where

$\gamma = \alpha + j\beta$ is the complex propagation constant and *Z* is the complex characteristic impedance;

$\alpha = \frac{IL}{20\lg(e)}$

and where

IL is the insertion loss of the component in dB

and e ≅ 2,718 28 (base of natural logarithms).

Copyright International Organization for Standardization
Provided by IHS under license with ISO
No reproduction or networking permitted without license from IHS Not for Resale

$$\beta = \frac{2\pi f 10^6}{NVP\,\mathrm{c}} \text{ rad/m}$$

where

f is the frequency in MHz;

NVP is the nominal velocity of propagation relative to the speed of light.

c is the speed of light in vacuum 3×10^8 m/s.

L is the length of the component in meters.

The return loss (RL) is computed from the overall transmission matrix $\begin{bmatrix} A & B \\ C & D \end{bmatrix}$ by:

$$Z_{\text{in}} = \frac{A\,Z_{\text{term}} + B}{C\,Z_{\text{term}} + D}, \text{ and } RL = -20 \lg\left(\left|\frac{Z_{\text{in}} - Z_{\text{term}}}{Z_{\text{in}} + Z_{\text{term}}}\right|\right) \quad \text{(G.21)}$$

with the nominal impedance Z_{term} = 100 Ω.

G.5.2 Assumptions for the return loss circuit analysis method

G.5.2.1 Assumptions for the transmission matrix for cable

For cable, the specified insertion loss divided by the 100 m test length is given by:

$$IL = \frac{k_1\sqrt{f} + k_2 f + \frac{k_3}{\sqrt{f}}}{100} \text{ (dB)} \quad \text{(G.22)}$$

where k_1, k_2 and k_3 are the constants in the equation for cable insertion loss.

The properties of the characteristic impedance Z include a fitted (average) characteristic impedance Z_{fit}, which is assumed constant along the length of the cable, and a random variation around the fitted characteristic impedance. The fitted characteristic impedance can be represented by:

$$Z_{\text{fit}} = Z_0\left(1 + 0{,}055\,\frac{1-\mathrm{j}}{\sqrt{f}}\right) \quad \text{(G.23)}$$

where Z_0 is the asymptotic value of the fitted characteristic impedance. For this quantity the value of the mean characteristic impedance as specified in Clause 9 shall be used.

The allowed values for Z_0 can be determined by assuming that contributions to cable return loss from structural variations may be ignored at low frequencies. The value of Z_0 is adjusted so that at the lowest possible frequency the computed return loss using the transmission matrix method matches the return loss specification for cable (the test length is 100 m).

Pair structural variations may be represented by dividing the cable into many interval segments of randomly varying impedance, and performing a Monte-Carlo analysis of the cable return loss. The amplitude of these variations is adjusted so that the overall return loss is approximated. This is rather computation intensive and requires many iterations.

A simpler way is to assume that return loss caused by structural variations is uncorrected with the interface return loss that is the result of reflections at the beginning and end of a cable segment. The distributed return loss (*DRL*, an approximation of structural return loss) is

--`,,```,,,,````-`-`,,`,,`,`,,`---

Copyright International Organization for Standardization
Provided by IHS under license with ISO
No reproduction or networking permitted without license from IHS Not for Resale

obtained by power sum subtracting the interface return loss from the specified return loss in this standard.

$$DRL = -10 \lg \left(10^{\frac{-RL_{\text{cable}}}{10}} - 10^{\frac{-RL_{\text{interface}}}{10}} \right) \quad \text{(G.24)}$$

DRL at frequencies >50 MHz may be approximated by:

$$DRL_{100\text{m}} = \text{DRL}_0 - 10 \lg(f) \quad \text{(G.25)}$$

where DRL_0 is a constant.

The approximate DRL value of DRL_0 is 43,5 dB for Category 5 and Category 6 cable, and 48,3 dB for Category 7 cable.

This approximation may be used to represent the contributions from all distributed sources of return loss in cabling for most lengths of cabling. The contribution from *DRL* over a short length of cable may be approximated using the same equation as that used for scaling NEXT per IEC 61156-1. The *DRL* from all of the cable segments are added together in a power sum manner to obtain the *DRL* for the whole link. Since the *DRL* contributions from all cable segments are uncorrected, the same *DRL* from the previous cable addition can also be obtained directly by assuming the total length in the length dependency equation and computing the correction only once. The changes caused by the length dependency equation are minimal when the total length of cabling exceeds 30 m, and therefore one may use the *DRL* approximation for all practical cabling lengths.

G.5.2.2 Assumptions for the transmission matrix for connectors

For a connector, the product of the propagation delay constant and length *L* is used.

$$\gamma L = \alpha L + \text{j}\beta L \quad \text{(G.26)}$$

For a connector, the propagation constant is calculated according to equation G.26. The magnitude of the propagation constant is obtained from insertion loss of the connector, and the phase constant is calculated from the propagation delay at a certain frequency, and is assumed to be proportional to frequency. See equation G.29.

The electrical length $L_{\text{connector}}$ is obtained from: $L_{\text{connector}} = NVP\,\text{c}\,\dfrac{\varphi_{\text{x}}}{360\,f_x}$ (G.27)

where

φ_x is the measured phase angle in degrees between the output and input of the connector at a high frequency f_x (for example 100 MHz)

The connector is now modelled as a short transmission line of electrical length $L_{\text{connector}}$. The frequency response for connector return loss exhibits a 20 dB/decade slope within the frequency range of interest. The value of the characteristic impedance $Z_{\text{connector}}$ for the connector is adjusted so that the specified return loss at a certain frequency is matched. Practical values of $L_{\text{connector}}$ lie between 50 mm and 100 mm. Values of $Z_{\text{connector}}$ lie between 130 Ω and 150 Ω for a connector with 20 dB @ 100 MHz of return loss.

The insertion loss constant is given by $\alpha L = k_{\text{c}}\sqrt{f}$ (G.28)

where k_{c} is the constant in the connector insertion loss equation.

Copyright International Organization for Standardization
Provided by IHS under license with ISO
No reproduction or networking permitted without license from IHS Not for Resale

The phase constant is given by: $\beta L = \frac{\pi}{180} \varphi_x \frac{f}{f_x}$. (G.29)

G.5.2.3 Typical results

Reflections at the cable interfaces may result from characteristic impedance mismatches between cable segments or from the mismatch between connectors and cable segments. The phase dependencies and potential for in-phase addition of return loss between the different components in the channel are very much dependent on the physical separation of these interfaces from each other. Worst case in-phase addition most likely occurs in the frequency range from 15 MHz to 30 MHz, where physical distances, typical for patch cords, match ¼ wavelengths. By carefully selecting the distances between connectors' multiples of a fixed low value (2 m for example), it is possible to show that the computed return loss exceeds the pass/fail limits for the channel or permanent link. This is an unlikely situation and will manifest itself only when the cabling components perform near their individual performance limits and under the following conditions:

- in channels that use a cross-connect;
- in channels and permanent links which use a consolidation point.

Copyright International Organization for Standardization
Provided by IHS under license with ISO
No reproduction or networking permitted without license from IHS Not for Resale

Annex H
(informative)

Class F channel and permanent link with two connections

Most class F channels and permanent links are implemented with 2 connections only.

The performance limits for balanced cabling channels given in this annex are derived from the component performance limits of Clauses 9 and 10 assuming the channel is composed of 90 m of solid conductor cable, 10 m of cord(s) and two connections (see Figure H.1).

The performance limits for balanced cabling permanent links given in this annex are derived from the component performance limits of Clauses 9 and 10 assuming the permanent link is composed of 90 m of solid conductor cable and two connections (see Figure H.1).

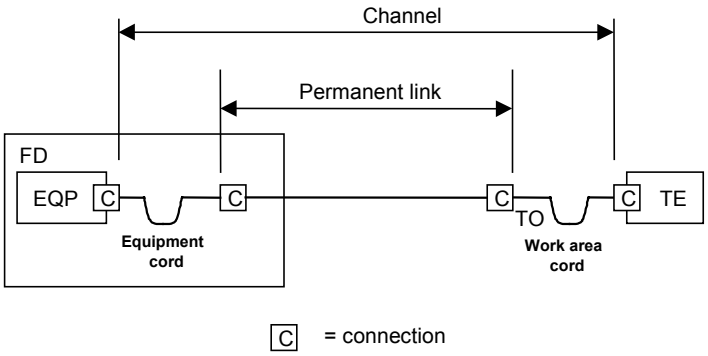

Figure H.1 – Two connection channel and permanent link

The ACR of each pair combination of a channel and of a permanent link are given in Table H.1.

The PS ACR of each pair of a channel and of a permanent link are also given in Table H.1.

Table H.1 – ACR and PS ACR values for 2 connection class F channels and permanent links at key frequencies

Frequency MHz	Channel		Permanent link	
	Minimum ACR dB	**Minimum PS ACR** dB	**Minimum ACR** dB	**Minimum PS ACR** dB
1	61,0	58,0	61,0	58,0
16	57,1	54,1	58,2	55,2
100	44,6	41,6	47,5	44,5
250	27,3	24,3	31,9	28,9
600	1,1	–1,9	8,6	5,6

Copyright International Organization for Standardization
Provided by IHS under license with ISO
No reproduction or networking permitted without license from IHS Not for Resale

Annex I
(informative)

Significant changes to balanced cabling requirements with respect to earlier editions of this International Standard

I.1 General

This standard contains performance requirements for both components and installed cabling. These requirements differ from those of ISO/IEC 11801 Ed.1 published in 1995, and those of the amendments to that edition, consolidated in ISO/IEC 11801 Ed.1.2 (2000).

This informative Annex contains a historical record of these significant technical changes and provides a reference to the requirements of the earlier editions and amendments of this standard.

ISO/IEC 11801 Ed.1 contained requirements for:

– Classes A, B, C and D of installed balanced cabling links and channels.

– 100 Ω (Category 3, 4 and 5) cabling components;

– 120 Ω (Category 3, 4 and 5) cabling components;

– 150 Ω cabling components.

ISO/IEC 11801 Ed.1.2 contained revisions to the requirements for installed cabling (see I.6) but did not include significant changes to the component requirements.

I.2 References

References to this International Standard should specifically differentiate the requirements and classifications of ISO/IEC 11801 Ed.2 from those of ISO/IEC 11801 Ed.1 (1995) and ISO/IEC 11801 Ed.1.2 (2000) (including amendment 1 (1999) and amendment 2 (1999)) by specifically referencing ISO/IEC 11801 Ed. 2 (2002).

I.3 Structural elements

The TP (transition point), which had no effect on the link and channel performance, has been removed and the CP (consolidation point) was introduced. The effects of the CP on the link and channel performance are taken in account.

I.4 Product designation

For the purpose of component marking and system identification, it is appropriate to directly reference the year of publication of the second edition, or to use a specific designation that provides linkage to it.

I.5 Component requirements

This International Standard contains a revision of the cabling components specified with respect to their minimum performance as parts of installed links and channels. Specifically, Category 3 (100 Ω and 120 Ω), Category 4 (100 Ω and 120 Ω) and 150 Ω cabling components have been removed and Category 6 and 7 requirements have been included.

Copyright International Organization for Standardization
Provided by IHS under license with ISO
No reproduction or networking permitted without license from IHS Not for Resale

Specifications for all the cables removed from this standard are included in IEC 61156-2.

Specifications for Category 3 connecting hardware are included in IEC 60603-7 and IEC 60603-7-1 for unscreened and screened components respectively. Specifications for Category 4 (100 Ω and 120 Ω) connecting hardware are expected to be included in IEC 60603-7-2 and IEC 60603-7-3 for unscreened and screened components respectively.

NOTE 1 At the time of publication IEC 60603-7-2 (Connectors for electronic equipment – Part 7-2: Detail specification for 8-way, unshielded, free and fixed connectors, for data transmissions with frequencies up to 100 MHz) was not available. Until this specification is available compliance to requirements that refer to IEC 60603-7-2 in I.5 may be attained by full compliance with 60603-7, combined with all applicable requirements of I.5 of this standard.

NOTE 2 At the time of publication IEC 60603-7-3 (Connectors for electronic equipment – Part 7-3: Detail specification for 8-way, shielded, free and fixed connectors, for data transmissions with frequencies up to 100 MHz) was not available. Until this specification is available compliance to requirements that refer to IEC 60603-7-3 in I.5 may be attained by full compliance with 60603-7-1, combined with all applicable requirements of I.5 of this standard.

Mechanical requirements for 150 Ω connecting hardware are included in IEC 60807-8. The principal transmission performance requirements are included in Table I.1.

Table I.1 - Principal transmission performance requirements of 150 Ω connecting hardware

Parameter	Unit	Frequency MHz	Requirement	Test method
Maximum attenuation	dB	1,0	0,05	ISO/IEC 11801 Ed.1/Ed. 1.2 Annex A, A.2.3.1[a]
		4,0	0,05	
		10,0	0,10	
		16,0	0,15	
		20,0	0,15	
		31,25	0,15	
		62,5	0,20	
		100	0,25	
Minimum NEXT	dB	1,0	>65	ISO/IEC 11801 Ed.1/Ed. 1.2 Annex A, A.2.3.2[a]
		4,0	>65	
		10,0	>65	
		16,0	62,4	
		20,0	60,5	
		31,25	56,6	
		62,5	50,6	
		100	46,5	
Minimum return loss	dB	$1 \le f \le 100$	36 – 20 lg (f/16), 26 dB max.	ISO/IEC 11801 Ed.1/Ed. 1.2 Annex A, A.2.3.2[a]
[a] For details, see I1.				
NOTE "NEXT loss" was used in previous editions, now "NEXT" is used alone.				

I.6 Installed cabling requirements

This International Standard contains modifications to the designations of, and the performance requirements for installed cabling.

Figure I.1 and Figure I.2 show the installed cabling reference points used in ISO/IEC 11801 Ed.1 and ISO/IEC 11801 Ed.1.2 for horizontal and backbone cabling. The link, shown in the figures as "Link (1995)" was defined as the channel excluding the cable within the equipment cords. ISO/IEC 11801 Ed.1.2, i.e. amendments 1 and 2 re-defined the

--`,,```,,,,````-`-`,,`,,`,`,,`---

Copyright International Organization for Standardization
Provided by IHS under license with ISO
No reproduction or networking permitted without license from IHS Not for Resale

reference points as “permanent link” and “channel”. The permanent link was defined as the fixed installation including the connecting hardware at each end.

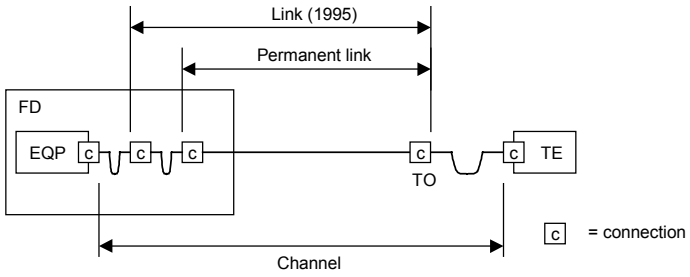

NOTE Previous editions and amendments of this International Standard do not support the concept of the consolidation point.

Figure I.1 – Horizontal cabling model

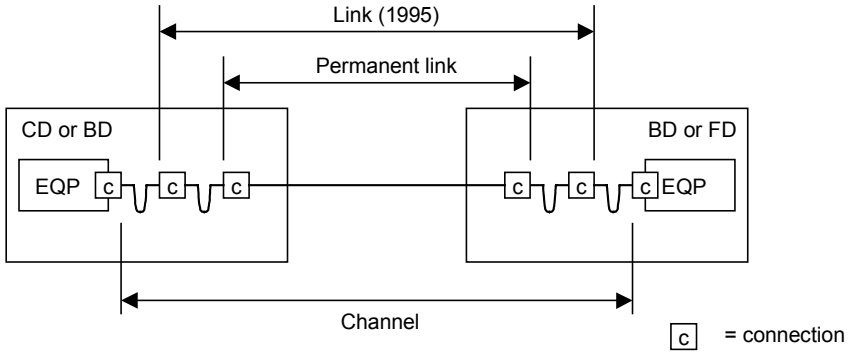

Figure I.2 – Backbone cabling model

In all Tables in this Annex the abbreviations L, PL and C refer to the performance limits for the classes of “links”, “permanent links” and “channels”, respectively.

Table I.2 to Table I.8 show the requirements for parameters included in both ISO/IEC 11801 Ed.1 and ISO/IEC 11801 Ed.1.2. Component performance requirements for these parameters, included in ISO/IEC 11801 Ed.1, were not changed in ISO/IEC 11801 Ed.1.2, i.e. by amendments 1 and 2.

Table I.9 and Table I.10 show the requirements for parameters included only in ISO/IEC 11801 Ed.1.2 (i.e. the amendments). The component performance requirements for these parameters were not specified in ISO/IEC 11801 Ed.1.2.

The use of components of ISO/IEC 11801 Ed.1 does not imply conformance with the requirements of Table I.9 and Table I.10.

Copyright International Organization for Standardization
Provided by IHS under license with ISO
No reproduction or networking permitted without license from IHS
Not for Resale

Table I.2 – Minimum return loss limits for links, permanent links and channels for the different cabling classes

	Minimum return loss dB					
	Class C			Class D		
Frequency MHz	L	PL	C	L	PL	C
$1 \le f < 10$	18,0 (f.f.s.)	15,0	15,0	18,0 (f.f.s.)	17,0	17,0
$10 \le f \le 16$	15,0 (f.f.s.)	15,0	15,0	15,0 (f.f.s.)	17,0	17,0
$16 \le f < 20$	N/A	N/A	N/A	15,0 (f.f.s.)	17,0	17,0
$20 \le f \le 100$	N/A	N/A	N/A	10,0 (f.f.s.)	17-7 lg (*f*/20)	17 – 10 lg (*f*/20)

Table I.3 – Maximum attenuation limits for links, permanent links and channels for the different cabling classes

	Maximum attenuation dB											
Frequency MHz	Class A			Class B			Class C			Class D		
	L	PL	C	L	PL	C	L	PL	C	L	PL	C
0,1	16,0	16,0	16,0	5,5	5,5	5,5	N/A	N/A	N/A	N/A	N/A	N/A
1,0	N/A	N/A	N/A	5,8	5,8	5,8	3,7	3,1	4,2	2,5	2,1	2,5
4,0	N/A	N/A	N/A	N/A	N/A	N/A	6,6	5,8	7,3	4,8	4,1	4,5
10,0	N/A	N/A	N/A	N/A	N/A	N/A	10,7	9,6	11,5	7,5	6,1	7,0
16,0	N/A	N/A	N/A	N/A	N/A	N/A	14	12,6	14,9	9,4	7,8	9,2
20,0	N/A	N/A	N/A	N/A	N/A	N/A	N/A	N/A	N/A	10,5	8,7	10,3
31,25	N/A	N/A	N/A	N/A	N/A	N/A	N/A	N/A	N/A	13,1	11,0	12,8
62,5	N/A	N/A	N/A	N/A	N/A	N/A	N/A	N/A	N/A	18,4	16,0	18,5
100,0	N/A	N/A	N/A	N/A	N/A	N/A	N/A	N/A	N/A	23,2	20,6	24,0
NOTE The maximum *attenuation* for Class D specified in ISO/IEC 11801 Ed.1 could only be exploited within the limits given by the minima specified for *NEXT* and *ACR*.												

--`,,```,,,,````-`-`,,`,,`,`,,`---

Copyright International Organization for Standardization
Provided by IHS under license with ISO
No reproduction or networking permitted without license from IHS Not for Resale

Table I.4 – Minimum NEXT limits for links, permanent links and channels for the different cabling classes

Frequency MHz	Minimum NEXT dB											
	Class A			Class B			Class C			Class D		
	L	PL	C	L	PL	C	L	PL	C	L	PL	C
0,1	27,0	27,0	27,0	40,0	40,0	40,0	N/A	N/A	N/A	N/A	N/A	N/A
1,0	N/A	N/A	N/A	25,0	25,0	25,0	39,0	40,1	39,1	54,0	61,2	60,3
4,0	N/A	N/A	N/A	N/A	N/A	N/A	29,0	30,7	29,3	45,0	51,8	50,6
10,0	N/A	N/A	N/A	N/A	N/A	N/A	23,0	24,3	22,7	39,0	45,5	44,0
16,0	N/A	N/A	N/A	N/A	N/A	N/A	19,0	21,0	19,3	36,0	42,3	40,6
20,0	N/A	N/A	N/A	N/A	N/A	N/A	N/A	N/A	N/A	35,0	40,7	39,0
31,25	N/A	N/A	N/A	N/A	N/A	N/A	N/A	N/A	N/A	32,0	37,6	35,7
62,5	N/A	N/A	N/A	N/A	N/A	N/A	N/A	N/A	N/A	27,0	32,7	30,6
100,0	N/A	N/A	N/A	N/A	N/A	N/A	N/A	N/A	N/A	24,0	29,3	27,1

NOTE The minimum *NEXT* for Class D specified in ISO/IEC 11801 Ed.1 could only be exploited within the limits given by the maxima specified for *attenuation* and *ACR*.

Table I.5 – Minimum ACR limits for links, permanent links and channels for the different cabling classes

Frequency MHz	Minimum ACR dB											
	Class A			Class B			Class C			Class D		
	L	PL	C	L	PL	C	L	PL	C	L	PL	C
0,1	11,0	11,0	11,0	34,5	34,5	34,5	–	–	–	–	–	–
1,0	N/A	N/A	N/A	19,2	19,2	19,2	35,3	37,0	34,9	-	59,1	57,8
4,0	N/A	N/A	N/A	N/A	N/A	N/A	22,4	24,9	22,0	40,0	47,7	46,1
10,0	N/A	N/A	N/A	N/A	N/A	N/A	12,3	14,7	11,2	35,0	39,4	37,0
16,0	N/A	N/A	N/A	N/A	N/A	N/A	5,0	8,4	4,4	30,0	34,5	31,4
20,0	N/A	N/A	N/A	N/A	N/A	N/A	N/A	N/A	N/A	28,0	32,0	28,7
31,25	N/A	N/A	N/A	N/A	N/A	N/A	N/A	N/A	N/A	23,0	26,6	22,9
62,5	N/A	N/A	N/A	N/A	N/A	N/A	N/A	N/A	N/A	13,0	16,7	12,1
100,0	N/A	N/A	N/A	N/A	N/A	N/A	N/A	N/A	N/A	4,0	8,7	3,1

NOTE 1 The return loss requirements of ISO/IEC 11801 Ed.1 and ISO/IEC 11801 Ed.1.2, i.e. the amendments, demand that the links, permanent links and channels under test be terminated with an impedance equal to that of the design impedance of the cabling (100 Ω, 120 Ω or 150 Ω as applicable). The test methods referred to in ISO/IEC 11801 Ed.2 require that cabling be terminated with an impedance of 100 Ω only.

NOTE 2 The *ACR* for Class D specified in ISO/IEC 11801 Ed.1 provided some head room for trade off between *NEXT* and *attenuation.*

Copyright International Organization for Standardization
Provided by IHS under license with ISO
No reproduction or networking permitted without license from IHS Not for Resale

Table I.6 – Maximum propagation delay limits for links, permanent links and channels for the different cabling classes

	L		PL		C	
Class	**Frequency** MHz	**Maximum delay** μs	**Frequency** MHz	**Maximum delay** μs	**Frequency** MHz	**Maximum delay** μs
A	0,01	20,0 [a]	0,1	0,9	0,1	20,0 [a]
B	1,0	5,0 [a]	1,0	0,9	1,0	5,0 [a]
C	10,0	1,0	$1 \le f \le 16$	$0{,}486+0{,}036/\sqrt{f}$	$1 \le f \le 16$	$0{,}544+0{,}036/\sqrt{f}$
D	30,0	1,0	$1 \le f \le 100$	$0{,}486+0{,}036/\sqrt{f}$	$1 \le f \le 100$	$0{,}544+0{,}036/\sqrt{f}$
[a] The maximum delay within horizontal generic links and channels = 1,0 μs.						

Table I.7 – Maximum d.c. loop resistance limits for links, permanent links and channels for the different cabling classes

Maximum d.c. loop resistance Ω											
Class A			**Class B**			**Class C**			**Class D**		
L	**PL**	**C**	**L**	**PL**	**C**	**L**	**PL**	**C**	**L**	**PL**	**C**
560	560	560	170	170	170	40	40	40	40	40	40

The term “unbalance attenuation” was not used in ISO/IEC 11801 Ed.1 and ISO/IEC 11801 Ed.1.2, i.e. the amendments 1 or 2. Instead “longitudinal to differential conversion loss (balance) measured as *LCL* and as *LCTL* according to ITU-T Recommendation G.117” was specified and the requirements are shown in Table I.8.

Table I.8 – Minimum unbalance attenuation (LCL/LCTL) limits for links, permanent links and channels for the different cabling classes

	Minimum LCL/LCTL dB											
Frequency MHz	**Class A**			**Class B**			**Class C**			**Class D**		
	L	**PL**	**C**	**L**	**PL**	**C**	**L**	**PL**	**C**	**L**	**PL**	**C**
0,1	30	30	30	45	45	45	35	45	45	40	45	45
1,0	N/A	N/A	N/A	20	20	20	30	30	30	40	40	40
4,0	N/A	N/A	N/A	N/A	N/A	N/A	f.f.s.	f.f.s.	f.f.s.	f.f.s.	f.f.s.	f.f.s.
10,0	N/A	N/A	N/A	N/A	N/A	N/A	25	25	25	30	30	30
16,0	N/A	N/A	N/A	N/A	N/A	N/A	f.f.s.	f.f.s.	f.f.s.	f.f.s.	f.f.s.	f.f.s.
20,0	N/A	N/A	N/A	N/A	N/A	N/A	f.f.s.	f.f.s.	f.f.s.	f.f.s.	f.f.s.	f.f.s.
100,0	N/A	N/A	N/A	N/A	N/A	N/A	N/A	N/A	N/A	f.f.s.	f.f.s.	f.f.s.

Copyright International Organization for Standardization
Provided by IHS under license with ISO
No reproduction or networking permitted without license from IHS Not for Resale

Table I.9 – Minimum PS NEXT, PS ACR, ELFEXT and PS ELFEXT limits for permanent links and channels for the different cabling classes

	Minimum PS NEXT dB		Minimum PS ACR dB		Minimum ELFEXT dB		Minimum PS ELFEXT dB	
Frequency MHz	Class D		Class D		Class D		Class D	
	PL	C	PL	C	PL	C	PL	C
1,0	58,2	57,3	56,1	54,8	59,6	57,0	57,0	54,4
4,0	48,8	47,6	44,7	43,1	47,6	45,0	45,0	42,6
10,0	42,5	41,0	36,4	34,0	39,6	37,0	37,0	34,4
16,0	39,3	37,6	31,5	28,4	35,5	32,9	32,9	30,3
20,0	37,7	36,0	29,0	25,7	33,6	31,0	31,0	28,4
31,25	34,6	32,7	23,6	19,9	29,7	27,0	27,1	24,5
62,5	29,7	27,6	13,7	9,1	23,7	21,1	21,1	18,5
100,0	26,3	24,1	5,7	0,1	19,6	17,0	17,0	14,4
NOTE Limits for power sum parameters were not included in ISO/IEC 11801 Ed.1.								

Table I.10 – Maximum delay skew limits for permanent links and channels for the different cabling classes

	Maximum delay skew µs							
Frequency MHz	Class A		Class B		Class C		Class D	
	PL	C	PL	C	PL	C	PL	C
$1 \leq f \leq 16$	N/A	N/A	N/A	N/A	0,043	0,050	0,043	0,050
$1 \leq f \leq 100$	N/A	N/A	N/A	N/A	0,043	0,050	0,043	0,050
NOTE Limits for delay skew were not included in ISO/IEC 11801 Ed.1.								

Copyright International Organization for Standardization
Provided by IHS under license with ISO
No reproduction or networking permitted without license from IHS
Not for Resale

Bibliography

CISPR 22, *Information technology equipment – Radio disturbance characteristics – Limits and methods of measurement*

CISPR 24, *Information technology equipment - Immunity characteristics – Limits and methods of measurement*

IEC 60068-2-2, *Basic environmental testing procedures – Part 2: Tests – Tests B: Dry heat*

IEC 60068-2-6, *Environmental testing – Part 2: Tests – Tests Fc: Vibration (sinusoidal)*

IEC 60068-2-60, *Environmental testing – Part 2: Tests – Test Ke: Flowing mixed gas corrosion test*

IEC 60096-1, *Radio-frequency cables – Part 1: General requirements and measuring methods*

IEC 60189-1, *Low-frequency cables and wires with p.v.c. insulation and p.v.c. sheath – Part 1: General test and measuring methods*

IEC 60227-2, *Polyvinyl chloride insulated cables of rated voltages up to and including 450/750 V – Part 2: Test methods*

IEC 60332-3 (all parts), *Tests on electric cables under fire conditions – Part 3: Test for vertical flame spread on vertically-mounted bunched wires or cables*

IEC 60512 (all parts), *Connectors for electronic equipment – Tests and measurements*

IEC 60512-1, *Connectors for electronic equipment – Tests and measurements – Part 1: General*

IEC 60512-3:1976, *Electromechanical components for electronic equipment – Basic testing procedures and measuring methods – Part 3: Current-carrying capacity tests*

IEC 60512-25-3, *Connectors for electronic equipment – Tests and measurements – Part 25-3: Test 25c – Rise time degradation*

IEC 60708-1, *Low-frequency cables with polyolefin insulation and moisture barrier polyolefin sheath – Part 1: General design details and requirements*

IEC 60793-1 (all parts), *Optical fibres – Part 1: Generic specification*

IEC 60793-1-4X (all parts), *Optical fibres – Part 1-4X: Measurement methods and test procedures*

IEC 60794-1 (all parts), *Optical fibre cables – Part 1: Generic specification*

IEC 60794-1-1, *Optical fibre cables – Part 1-1: Generic specification – General*

IEC 60794-1-2, *Optical fibre cables – Part 1-2: Generic specification – Basic optical cable test procedures*

IEC 60807-8, *Rectangular connectors for frequencies below 3 MHz – Part 8: Detail specification for connectors, four-signal contacts and earthing contacts for cable screen*

--`,,```,,,,````-`-`,,`,,`,`,,`---

Copyright International Organization for Standardization
Provided by IHS under license with ISO
No reproduction or networking permitted without license from IHS Not for Resale

IEC 60811-1-1, *Common test methods for insulating and sheathing materials of electric cables – Part 1-1: Methods for general application – Measurement of thickness and overall dimensions – Tests for determining the mechanical properties*

IEC 60825-1, *Safety of laser products – Part 1: Equipment classification, requirements and user's guide*

IEC 60874-10, *Connectors for optical fibres and cables – Part 10: Sectional specification for fibre optic connector – Type BFOC/2,5*

IEC 60874-19-4, *Connectors for optical fibres and cables – Part 19-4: Detail specification for fibre optic connector (duplex) type SC-PC premium for multi-mode fibre type A1a, A1b*
(Under consideration)

IEC 60874-19-5, *Connectors for optical fibres and cables – Part 19-5: Detail specification for fibre optic connector Type SC-PC (Rigid Duplex) Standard for multimode fibre type A1a, A1b*
(Under consideration)

IEC 60950 (all parts), *Information technology equipment – Safety*

IEC 61000-2-2, *Electromagnetic compatibility (EMC) – Part 2-2: Environment – Compatibility levels for low-frequency conducted disturbances and signalling in public low-voltage power supply systems*

IEC/TR3 61000-5-2:1997, *Electromagnetic compatibility (EMC) – Part 5: Installation and mitigation guidelines – Section 2: Earthing and cabling*

IEC 61000-5-2, *Electromagnetic compatibility (EMC) – Part 5-2: Installation and mitigation guidelines – Earthing and bonding* (Under consideration)

IEC 61035-1, *Specification for conduit fittings for electrical installations – Part 1: General requirements*

IEC 61076-3-104, *Connectors for electronic equipment – Part 3-104: Detail specification for 8-way, shielded free and fixed connectors, for data transmissions with frequencies up to 600 MHz* (Under consideration)

IEC 61280 (all parts), *Fibre optic communication subsystem basic test procedures*

IEC 61280-4-1, *Fibre optic communication subsystem basic test procedures – Part 4-1: Test procedures for fibre optic cable plant and links – Multimode fibre optic plant attenuation measurement*

IEC 61280-4-2:1999, *Fibre optic communication subsystem basic test procedure – Part 4-2: Fibre optic cable plant – Single-mode fibre optic plant attenuation measurement*

IEC 61280-4-3, *Fibre optic communication subsystem basic test procedure – Part 4-3: Fibre optic cable plant – Single-mode fibre optic plant optical return loss measurement*

IEC 61300 (all parts), *Fibre optic interconnecting devices and passive components – Basic test and measurement procedures*

IEC 61300-2-1, *Fibre optic interconnecting devices and passive components – Basic test and measurement procedures – Part 2-1: Tests – Vibration (sinusoidal)*

IEC 61300-2-4, *Fibre optic interconnecting devices and passive components – Basic test and measurement procedures – Part 2-4: Tests – Fibre/cable retention*

Copyright International Organization for Standardization
Provided by IHS under license with ISO
No reproduction or networking permitted without license from IHS Not for Resale

IEC 61300-2-5, *Fibre optic interconnecting devices and passive components – Basic test and measurement procedures – Part 2-5: Tests – Torsion/twist*

IEC 61300-2-6, *Fibre optic interconnecting devices and passive components – Basic test and measurement procedures – Part 2-6: Tests – Tensile strength of coupling mechanism*

IEC 61300-2-12, *Fibre optic interconnecting devices and passive components – Basic test and measurement procedures – Part 2-12: Tests – Impact*

IEC 61300-2-17, *Fibre optic interconnecting devices and passive components – Basic test and measurement procedures – Part 2-17: Tests – Cold*

IEC 61300-2-18, *Fibre optic interconnecting devices and passive components – Basic test and measurement procedures – Part 2-18: Tests – Dry heat – High temperature endurance*

IEC 61300-2-19, *Fibre optic interconnecting devices and passive components – Basic test and measurement procedures – Part 2-19: Tests – Damp heat (steady state)*

IEC 61300-2-22, *Fibre optic interconnecting devices and passive components – Basic test and measurement procedures – Part 2-22: Tests – Change of temperature*

IEC 61300-2-42, *Fibre optic interconnecting devices and passive components – Basic test and measurement procedures – Part 2-42: Tests – Static side load for connectors*

ISO/IEC 8802-3, *Information technology – Telecommunications and information exchange between systems – Local and metropolitan area networks – Specific requirements – Part 3: Carrier sense multiple access with collision detection (CSMA/CD) access method and physical layer specifications*

ISO/IEC 8802-4, *Information processing systems – Local area networks – Part 4: Token-passing bus access method and physical layer specifications*

ISO/IEC 8802-5, *Information technology – Telecommunications and information exchange between systems – Local and metropolitan area networks – Specific requirements – Part 5: Token ring access method and physical layer specifications*

ISO/IEC 8802-9, *Information technology – Telecommunications and information exchange between systems – Local and metropolitan area networks – Specific requirements – Part 9: Integrated Services (IS) LAN Interface at the Medium Access Control (MAC) and Physical (PHY) Layers*

ISO/IEC 8802-12, *Information technology – Telecommunications and information exchange between systems – Local and metropolitan area networks – Specific requirements – Part 12: Demand-Priority access method, physical layer and repeater specifications*

Copyright International Organization for Standardization
Provided by IHS under license with ISO
No reproduction or networking permitted without license from IHS Not for Resale

ISO/IEC 8877, *Information technology – Telecommunications and information exchange between systems – Interface connector and contact assignment for ISDN Basic Access Interface located at reference points S and T*

ISO/IEC 9314-3, *Information processing systems – Fibre Distributed Data Interface (FDDI) – Part 3: Physical Layer Medium Dependent (PMD)*

ISO/IEC 9314-4, *Information technology – Fibre Distributed Data Interface (FDDI) – Part 4: Single Mode Fibre Physical Layer Medium Dependent (SMF-PMD)*

ISO/IEC 9314-9, *Information technology – Fibre Distributed Data Interface (FDDI) – Part 9: Low-cost Fibre, Physical Layer Medium Dependent (LCF-PMD)*

ISO/IEC 9314-10, *Information technology – Fibre Distributed Data Interface (FDDI) – Part 10: Twisted pair physical layer medium dependent (TP-PMD)* (Under consideration)

ISO/IEC 11518-1, *Information technology – High-performance Parallel Interface – Part 1: Mechanical, electrical and signalling protocol specification (HIPPI-PH)*

ISO/IEC/TR2 11802-4:1994, *Information technology – Telecommunications and information exchange between systems – Technical reports and guidelines – Part 4: Token ring access method and physical layer specifications – Fibre optic attachment*

ISO/IEC/TR 12075, *Information technology – Customer premises cabling – Planning and installation guide to support ISO/IEC 8802-5 token ring stations*

ISO/IEC 14165-111, *Information technology – Fibre channel – Part 111: Physical and signalling interface* (Under consideration)

ISO/IEC 14165-114, *Information technology – Fibre channel – Part 114: 100 Mbyte/s Twisted pair physical interface* (Under consideration)

ISO/IEC 14709 (all parts), *Information technology – Configuration of Customer Premises Cabling (CPC) for applications*

ISO/IEC 14709-1, *Information technology – Configuration of Customer Premises Cabling (CPC) for applications – Part 1: Integrated Services Digital Network (ISDN) basic access*

ISO/IEC 14709-2, *Information technology – Configuration of Customer Premises Cabling (CPC) for applications – Part 2: Integrated Services Digital Network (ISDN) primary rate*

ISO/IEC 15018, *Information technology – Integrated cabling for residential and SOHO (Small Office Home Office) environments* (Under consideration)

ITU-T Rec. G.117, *Transmission aspects of unbalance about earth*

ITU-T Rec. I.430, *Basic user-network interface; Layer 1 specification*

ITU-T Rec. I.431, *Primary rate user-network interface; Layer 1 specification*

ITU-T Rec. I.432, *B-ISDN user network interface; physical layer specification*

ITU-T Rec. G.650, *Transmission media characteristics – Definition and test methods for the relevant parameters of single-mode fibres*

Copyright International Organization for Standardization
Provided by IHS under license with ISO
No reproduction or networking permitted without license from IHS Not for Resale

ITU-T Rec. G.651, *Characteristics of a 50/125 μm multimode graded index optical fibre cable*

ITU-T Rec O.9, *Measuring arrangements to assess the degree of unbalance about earth*

ITU-T Rec. V.11, *Electrical characteristics for balanced double-current interchange circuits for general use with integrated circuit equipment in the field of data communications*

ITU-T Rec. X.21, *Interface between data terminal equipment (DTE) and data circuit-terminating equipment (DCE) for synchronous operation on public data networks*

Copyright International Organization for Standardization
Provided by IHS under license with ISO
No reproduction or networking permitted without license from IHS Not for Resale

Copyright International Organization for Standardization
Provided by IHS under license with ISO
No reproduction or networking permitted without license from IHS
Not for Resale

ISBN 2-8318-6575-1



ICS 35.200

Typeset and printed by the IEC Central Office
GENEVA, SWITZERLAND

Copyright International Organization for Standardization
Provided by IHS under license with ISO
No reproduction or networking permitted without license from IHS

Not for Resale