INTERNATIONAL STANDARD

ISO/IEC 11695-2

First edition
2008-11-01

Identification cards — Optical memory cards — Holographic recording method —

Part 2: Dimensions and location of accessible optical area

Cartes d'identification — Cartes à mémoire optique — Méthode d'enregistrement holographique —

Partie 2: Dimensions et emplacement de la zone optique accessible

Reference number
ISO/IEC 11695-2:2008(E)

--`,,```,,,,````-`-`,,`,,`,`,,`---

© ISO/IEC 2008

Copyright International Organization for Standardization
Provided by IHS under license with ISO
No reproduction or networking permitted without license from IHS

Not for Resale

PDF disclaimer

This PDF file may contain embedded typefaces. In accordance with Adobe's licensing policy, this file may be printed or viewed but shall not be edited unless the typefaces which are embedded are licensed to and installed on the computer performing the editing. In downloading this file, parties accept therein the responsibility of not infringing Adobe's licensing policy. The ISO Central Secretariat accepts no liability in this area.

Adobe is a trademark of Adobe Systems Incorporated.

Details of the software products used to create this PDF file can be found in the General Info relative to the file; the PDF-creation parameters were optimized for printing. Every care has been taken to ensure that the file is suitable for use by ISO member bodies. In the unlikely event that a problem relating to it is found, please inform the Central Secretariat at the address given below.



COPYRIGHT PROTECTED DOCUMENT

© ISO/IEC 2008

All rights reserved. Unless otherwise specified, no part of this publication may be reproduced or utilized in any form or by any means, electronic or mechanical, including photocopying and microfilm, without permission in writing from either ISO at the address below or ISO's member body in the country of the requester.

ISO copyright office
Case postale 56 • CH-1211 Geneva 20
Tel. + 41 22 749 01 11
Fax + 41 22 749 09 47
E-mail copyright@iso.org
Web www.iso.org

Published in Switzerland

Copyright International Organization for Standardization
Provided by IHS under license with ISO
No reproduction or networking permitted without license from IHS
Not for Resale
© ISO/IEC 2008 – All rights reserved

Contents

Page

Foreword iv

Introduction v

1 Scope 1

2 Normative references 1

3 Terms and definitions 1

4 Dimensions and location 1
4.1 Accessible optical area 2
4.2 Dimensions R, S, T, U, V 2
4.3 Dimensions *X, Y* 4
4.4 Skew 4
4.5 Hologram size 5
4.6 Arrangement of multiple holograms 5

Bibliography 6

© ISO/IEC 2008 – All rights reserved

Copyright International Organization for Standardization
Provided by IHS under license with ISO
No reproduction or networking permitted without license from IHS
Not for Resale

Foreword

ISO (the International Organization for Standardization) and IEC (the International Electrotechnical Commission) form the specialized system for worldwide standardization. National bodies that are members of ISO or IEC participate in the development of International Standards through technical committees established by the respective organization to deal with particular fields of technical activity. ISO and IEC technical committees collaborate in fields of mutual interest. Other international organizations, governmental and non-governmental, in liaison with ISO and IEC, also take part in the work. In the field of information technology, ISO and IEC have established a joint technical committee, ISO/IEC JTC 1.

International Standards are drafted in accordance with the rules given in the ISO/IEC Directives, Part 2.

The main task of the joint technical committee is to prepare International Standards. Draft International Standards adopted by the joint technical committee are circulated to national bodies for voting. Publication as an International Standard requires approval by at least 75 % of the national bodies casting a vote.

ISO/IEC 11695-2 was prepared by Joint Technical Committee ISO/IEC JTC 1, *Information technology*, Subcommittee SC 17, *Cards and personal identification*.

ISO/IEC 11695 consists of the following parts, under the general title *Identification cards — Optical memory cards — Holographic recording method*:

— *Part 1: Physical characteristics*

— *Part 2: Dimensions and location of accessible optical area*

— *Part 3: Optical properties and characteristics*

© ISO/IEC 2008 – All rights reserved
Copyright International Organization for Standardization
Provided by IHS under license with ISO
No reproduction or networking permitted without license from IHS
Not for Resale

Introduction

ISO/IEC 11695 is one of a series of International Standards defining the parameters for optical memory cards and the use of such cards for the storage and interchange of digital data.

These International Standards recognize the existence of different methods for recording and reading information on optical memory cards, the characteristics of which are specific to the recording method employed. In general, these different recording methods will not be compatible with each other. Therefore, these International Standards are structured to accommodate the inclusion of existing and future recording methods in a consistent manner.

ISO/IEC 11695 is specific to optical memory cards using the holographic recording method. Characteristics which apply to other specific recording methods are found in separate International Standards.

This part of ISO/IEC 11695 defines the dimensions and location of the accessible optical area and the extent of compliance with, addition to, and/or deviation from the relevant base document, ISO/IEC 11693.

The International Organization for Standardization (ISO) and International Electrotechnical Commission (IEC) draw attention to the fact that it is claimed that compliance with this document may involve the use of patents.

The ISO and IEC take no position concerning the evidence, validity and scope of these patent rights.

The holders of these patent rights have assured the ISO and IEC that they are willing to negotiate licenses under reasonable and non-discriminatory terms and conditions with applicants throughout the world. In this respect, the Statements of the holders of these patent rights are registered with the ISO and IEC. Information may be obtained from:

Certego GmbH
Lichtenbergstrasse 8
85748 Garching
Germany

Attention is drawn to the possibility that some of the elements of this document may be the subject of patent rights other than those identified above. ISO and IEC shall not be held responsible for identifying any or all such patent rights.

--`,,```,,,,````-`-`,,`,,`,`,,`---
© ISO/IEC 2008 – All rights reserved
Copyright International Organization for Standardization
Provided by IHS under license with ISO
No reproduction or networking permitted without license from IHS
Not for Resale

--`,,```,,,,````-`-`,,`,,`,`,,`---

Copyright International Organization for Standardization
Provided by IHS under license with ISO
No reproduction or networking permitted without license from IHS

Not for Resale

Identification cards — Optical memory cards — Holographic recording method —

Part 2: Dimensions and location of accessible optical area

1 Scope

This part of ISO/IEC 11695 defines the dimensions and location of the accessible optical area of optical memory cards using the holographic recording method.

2 Normative references

The following referenced documents are indispensable for the application of this document. For dated references, only the edition cited applies. For undated references, the latest edition of the referenced document (including any amendments) applies.

ISO/IEC 11695-1, *Identification cards — Optical memory cards — Holographic recording method — Part 1: Physical characteristics*

ISO/IEC 11695-3 *Identification cards — Optical memory cards — Holographic recording method — Part 3: Optical properties and characteristics*

3 Terms and definitions

For the purposes of this document, the terms and definitions given in ISO/IEC 11695-1, ISO/IEC 11695-3 and the following apply.

3.1
reference hologram
hologram located at a defined position on the accessible optical area of the holographic memory card, containing information concerning the location and content of further holograms on the card

3.2
track
line running parallel to the longer reference edge of the card providing orientation for the storage of multiple holograms

3.3
reference track
track containing the reference hologram

4 Dimensions and location

This part of ISO/IEC 11695 applies to cards with a specified accessible optical area.

© ISO/IEC 2008 – All rights reserved

Copyright International Organization for Standardization
Provided by IHS under license with ISO
No reproduction or networking permitted without license from IHS
Not for Resale

4.1 Accessible optical area

The dimensions and location of the specified accessible optical area shall be as shown in Figure 1.

Dimensions in millimetres. Not to scale.

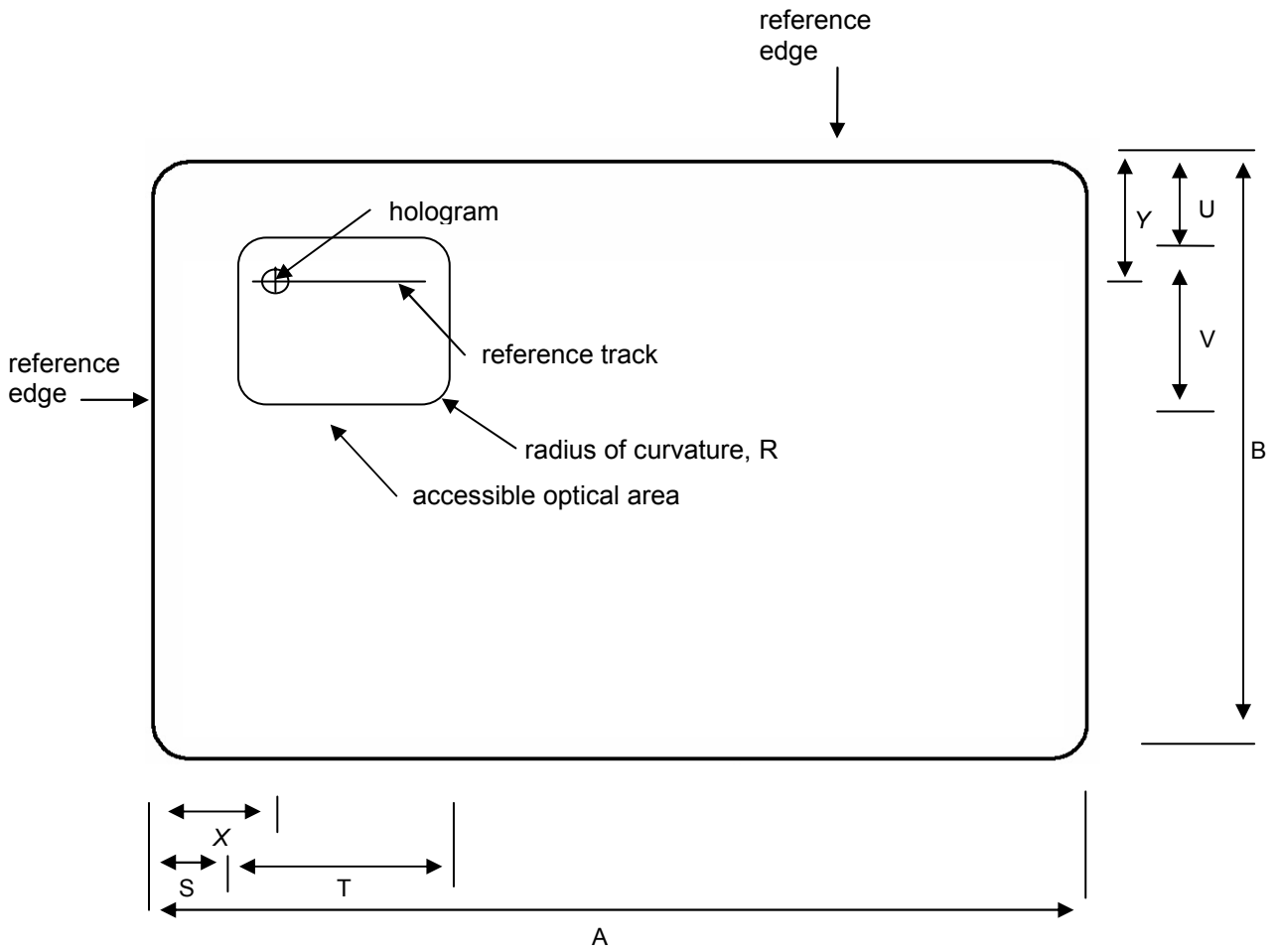

A = 85,47 to 85,72 (ISO/IEC 7810)
B = 53,92 to 54,02 (ISO/IEC 7810)
R, S, T, U, V see 4.2
X, Y see 4.3

Figure 1 — Accessible optical area

4.2 Dimensions R, S, T, U, V

This part of ISO/IEC 11695 defines two types of accessible optical area: one references a contact chip-type location and the other a magnetic-stripe-type location (see Figures 2 and 3).

© ISO/IEC 2008 – All rights reserved
Copyright International Organization for Standardization
Provided by IHS under license with ISO
No reproduction or networking permitted without license from IHS
Not for Resale

Dimensions in millimetres. Not to scale.

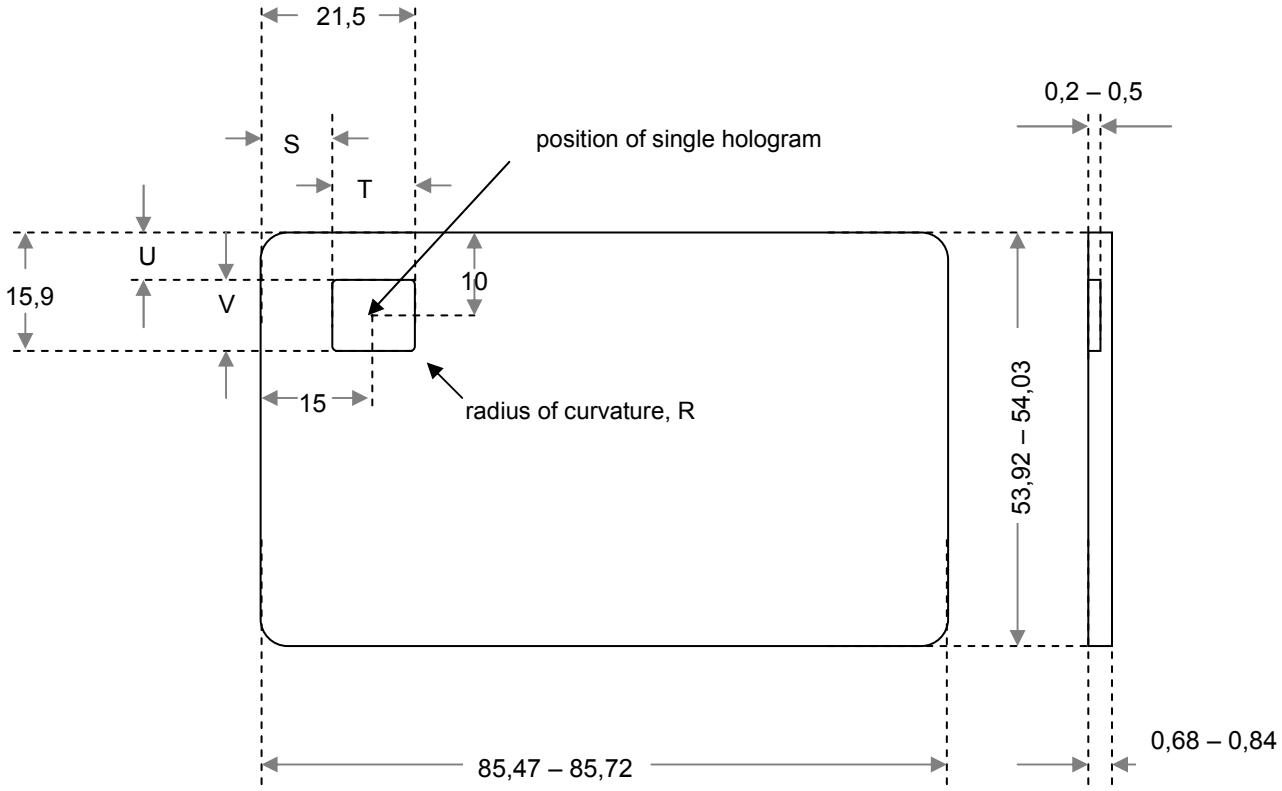

R = 2,2
S = 8,5
T = 13,0
U = 4,1
V = 11,8

Figure 2 — Chip-type accessible optical area

-`,,```,,,,````-`-,,`,,`,`,,`---
© ISO/IEC 2008 – All rights reserved
Copyright International Organization for Standardization
Provided by IHS under license with ISO
No reproduction or networking permitted without license from IHS
Not for Resale

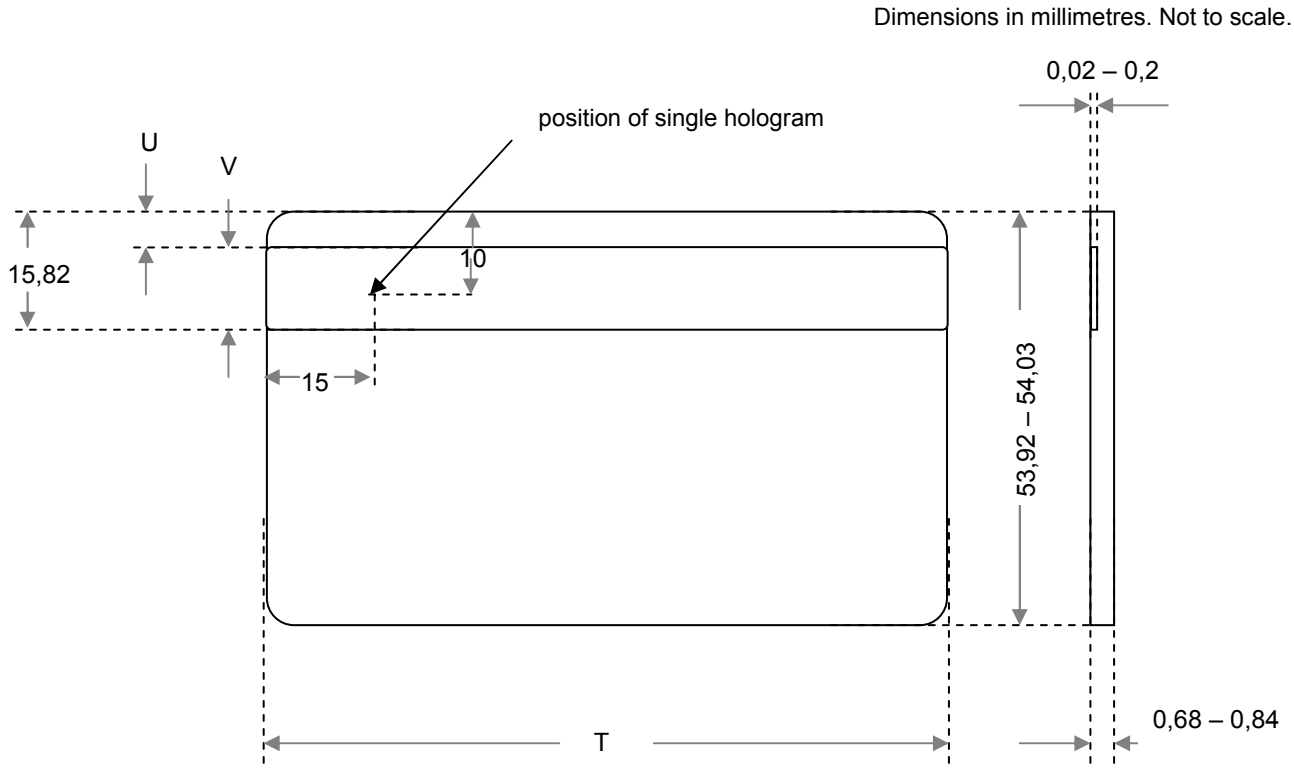

R = not applicable

S = not applicable

T = 85,47 to 85,72

U = 5,54

V = 10,28

Figure 3 — Magnetic-stripe-type accessible optical area

4.3 Dimensions *X, Y*

A reference hologram is placed at location *X,Y* relative to the reference edges (see Figure 1).

According to the accessible optical area as defined in 4.2, this part of ISO/IEC 11695 defines the position for the reference hologram to be *X* = 15 mm, *Y* = 10 mm.

4.4 Skew

The skew of the reference track relative to the horizontal reference edge of the card shall be less than or equal to 0,2°. See Figure 1.

© ISO/IEC 2008 – All rights reserved
Copyright International Organization for Standardization
Provided by IHS under license with ISO
No reproduction or networking permitted without license from IHS
Not for Resale

4.5 Hologram size

The hologram size is not fixed, but shall be left to each industry user group to specify for those applications requiring interchange. Typical values of the size of a hologram ranges between 0,02 mm^2 and 4 mm^2.

This part of ISO/IEC 11695 defines the hologram size to be 4 mm^2, therefore the size of the hologram (h_x, h_y) is defined to be h_x = 2 mm, h_y = 2 mm.

4.6 Arrangement of multiple holograms

The optical area can contain data in form of one or more holograms. The location of the reference hologram is at location *X*,*Y* relative to the reference edges of the card (see Figure 1).

If more than one hologram is located on the optical area of the card, holograms are arranged on the reference track or on tracks parallel to the reference track (see Figures 1 and 4). A minimum distance between the holograms has to be considered to avoid crosstalk from neighboring holograms when reading out one hologram. The distance (d_x, d_y) depends on the size of holograms (see 4.5) and has to be greater equal than the size of the hologram (h_x, h_y).

This part of ISO/IEC 11695 defines the distance between the holograms (d_x, d_y) to be d_x = 2 mm, d_y = 2 mm.

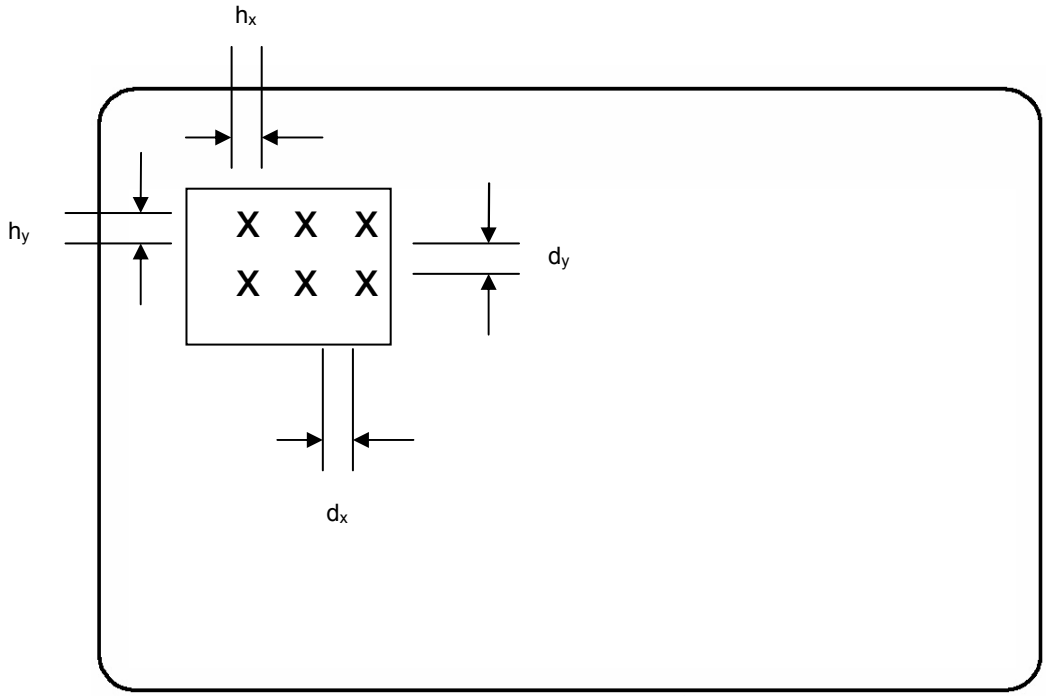

$d_x \geq h_x$

$d_y \geq h_y$

Figure 4 — Arrangement of multiple holograms

© ISO/IEC 2008 – All rights reserved

Copyright International Organization for Standardization
Provided by IHS under license with ISO
No reproduction or networking permitted without license from IHS
Not for Resale

Bibliography

[1] ISO/IEC 7810, *Identification cards — Physical characteristics*

[2] ISO/IEC 7811-2, *Identification cards — Recording technique — Part 2: Magnetic stripe — Low coercivity*

[3] ISO/IEC 7811-6, *Identification cards — Recording technique — Part 6: Magnetic stripe — High coercivity*

[4] ISO/IEC 7816-2, *Identification cards — Integrated circuit cards — Part 2: Cards with contacts — Dimensions and location of the contacts*

[5] ISO/IEC 10373-1, *Identification cards — Test methods — Part 1: General characteristics*

[6] ISO/IEC 10373-5, *Identification cards — Test methods — Part 5: Optical memory cards*

[7] ISO/IEC 11693, *Identification cards — Optical memory cards — General characteristics*

--`,,```,,,,````-`-`,,`,,`,`,,`---

© ISO/IEC 2008 – All rights reserved

Copyright International Organization for Standardization
Provided by IHS under license with ISO
No reproduction or networking permitted without license from IHS

Not for Resale

Copyright International Organization for Standardization
Provided by IHS under license with ISO
No reproduction or networking permitted without license from IHS
Not for Resale

ICS 35.240.15

Price based on 6 pages

© ISO/IEC 2008 – All rights reserved
Copyright International Organization for Standardization
Provided by IHS under license with ISO
No reproduction or networking permitted without license from IHS
Not for Resale