11319 93 ■ 4851903 0543395 7TT ■

INTERNATIONAL STANDARD

ISO/IEC 11319

First edition
1993-07-15

Information technology — 8 mm wide magnetic tape cartridge for information interchange — Helical scan recording

Technologies de l'information — Cartouche pour bande magnétique de 8 mm de large pour l'échange d'information — Enregistrement par balayage hélicoïdal

Reference number
ISO/IEC 11319:1993(E)

Copyright International Electrotechnical Commission
Provided by IHS under license with IEC
No reproduction or networking permitted without license from IHS

Not for Resale

Contents

		Page
Section 1 : General		**1**
1	Scope	**1**
2	Conformance	**1**
3	Normative references	**1**
4	Definitions	**1**
4.1	AC erase	**1**
4.2	Average Signal Amplitude	**1**
4.3	azimuth	**1**
4.4	back surface	**1**
4.5	bit cell	**1**
4.6	byte	**1**
4.7	cartridge	**1**
4.8	Cyclic Redundancy Check (CRC) Character	**1**
4.9	Error Correcting Code (ECC)	**2**
4.10	flux transition position	**2**
4.11	flux transition spacing	**2**
4.12	magnetic tape	**2**
4.13	Master Standard Reference Tape	**2**
4.14	Physical Beginning of Tape (PBOT)	**2**
4.15	Physical End of Tape (PEOT)	**2**
4.16	physical recording density	**2**
4.17	Secondary Reference Amplitude	**2**
4.18	Secondary Reference Field	**2**
4.19	Secondary Standard Reference Tape	**2**
4.20	Standard Reference Current (Ir)	**2**
4.21	Tape Reference Edge	**2**
4.22	Test Recording Current	**2**
4.23	tone	**2**
4.24	track	**2**
4.25	Typical Field	**2**

© ISO/IEC 1993
All rights reserved. No part of this publication may be reproduced or utilized in any form or by any means, electronic or mechanical, including photocopying and microfilm, without permission in writing from the publisher.

ISO/IEC Copyright Office • Case Postale 56 • CH-1211 Genève 20 • Switzerland

Printed in Switzerland

Copyright International Electrotechnical Commission
Provided by IHS under license with IEC
No reproduction or networking permitted without license from IHS

Not for Resale

5	Environment and safety	2
5.1	Testing environment	3
5.2	Operating environment	3
5.3	Storage environment	3
5.4	Transportation	3
5.5	Safety	3
5.6	Flammability	3
Section 2 : Requirements for the case		3
6	Dimensional and mechanical characteristics of the case	3
6.1	General	3
6.2	Overall dimension (figure 3)	4
6.3	Holding areas	4
6.4	Cartridge insertion	5
6.5	Window (figure 1)	5
6.6	Loading grips (figure 3)	6
6.7	Label areas (figure 3)	6
6.8	Datum areas and datum holes (figures 4, 5 and 6)	6
6.9	Support areas	7
6.10	Recognition holes (figures 5, 6 and 7)	7
6.11	Write-inhibit Hole (figures 6 and 7)	8
6.12	Pre-positioning surfaces (figures 3 and 5)	8
6.13	Cartridge lid (figures 3 and 8)	9
6.14	Cartridge reel lock (figure 11)	10
6.15	Reel access holes (figure 5)	11
6.16	Interface between the reels and the drive spindles (figures 17 and 18)	11
6.17	Light path (figures 5, 7, 15 and 16)	12
6.18	Position of the tape in the case (figure 16)	12
6.19	Tape path zone (figures 16 and 17)	13
6.20	Tape access cavity (figure 5)	13
6.21	Tape access cavity clearance requirements (figure 19)	13
Section 3 : Requirements for the unrecorded tape		31
7	Mechanical, physical and dimensional characteristics of the tape	31
7.1	Materials	31
7.2	Tape length	31
7.2.1	Length of magnetic tape	31
7.2.2	Length of leader and trailer tapes	31
7.2.3	Splicing tape	31
7.3	Width	31
7.4	Discontinuities	31
7.5	Thickness	31
7.5.1	Thickness of magnetic tape	31
7.5.2	Thickness of leader and trailer tape	31

Copyright International Electrotechnical Commission
Provided by IHS under license with IEC
No reproduction or networking permitted without license from IHS
Not for Resale

7.6	Longitudinal curvature	**31**
7.7	Cupping	**32**
7.8	Coating adhesion (figure 20)	**32**
7.9	Layer-to-layer adhesion	**32**
7.10	Tensile strength	**33**
7.10.1	Breaking strength	**33**
7.10.2	Yield strength	**33**
7.11	Residual elongation	**33**
7.12	Electrical resistance of the surface	**33**
7.13	Tape winding	**34**
7.14	Light transmittance of tape	**34**
8	Magnetic recording performance	**34**
8.1	Test conditions	**34**
8.2	Typical Field	**35**
8.3	Signal Amplitude	**35**
8.4	Resolution	**35**
8.5	Narrow-band signal-to-noise ratio	**35**
8.5.1	Requirement	**35**
8.5.2	Procedure	**35**
8.6	Ease of erasure	**35**
8.7	Tape quality	**35**
8.7.1	Missing pulses	**35**
8.7.2	Missing pulse zone	**35**
8.8	Inhibitor tape	**36**
Section 4 : Requirements for an interchanged tape		**36**
9	Format	**36**
9.1	General	**36**
9.2	Information matrix	**36**
9.2.1	Loading of the information matrix	**37**
10	Method of recording	**40**
10.1	Physical recording density	**40**
10.1.1	Long-term average bit cell length	**40**
10.1.2	Short-term average bit cell length	**41**
10.1.3	Rate of change	**41**
10.2	Bit shift	**41**
10.3	Read signal amplitudes	**41**

Copyright International Electrotechnical Commission
Provided by IHS under license with IEC
No reproduction or networking permitted without license from IHS
Not for Resale

10.3.1 Amplitude of data signals 41
10.3.2 Amplitude of servo signals 41
10.3.3 Signal amplitude on an analogue tape mark track 41

10.4 Erasure 41

11 Track geometry 42

11.1 Track positions 42

11.2.1 Average track pitch 43
11.2.2 Adjacent track pitch 43

11.3 Track width 43
11.4 Track angle 43
11.5 Linearity of track edges 43
11.6 Azimuth 43

12 Format of an information track 43

12.1 Channel bit 43
12.2 Information Segment 43

12.2.1 Bit Synchronization field 44
12.2.2 Information Segment Number 44
12.2.3 Information Segment field 44

12.3 Information Block 45
12.4 Information Zone 46
12.5 Servo Zone 46
12.6 Information Tracks 46

12.6.1 Format ID Track 47
12.6.2 Data Track 47
12.6.3 Tape Mark Track 47
12.6.4 Splice Track 47

13 Tape Mark 48

13.1 Description 48
13.2 Long Tape Mark 48
13.3 Short Tape Mark 48

13.3.1 Normal Short Tape Mark 48
13.3.2 Alternative Short Tape Mark 48

14 ID Information 49

14.1 Column 00, Row 00 49

14.1.1 Block Type - Data Block 49
14.1.2 Block Type - Data Block 49
14.1.3 Block type - Format ID 49

Copyright International Electrotechnical Commission
Provided by IHS under license with IEC
No reproduction or networking permitted without license from IHS Not for Resale

14.1.4 Block type - Pad Block 49

14.2 Column 00, Row 01 49
14.3 Column 00, Row 02 49
14.4 Column 00, Row 03 49
14.5 Column 00, Row 04 50
14.6 Column 00, Rows 05, 06 50

14.6.1 Row 05 50
14.6.2 Row 06 50

14.7 Column 00, Row 07 50
14.8 Column 00, Rows 08, 09, 10 50

14.8.1 Block type - Data Block 50
14.8.2 Block type - non-Data Block 50

14.9 Column 00, Rows 11, 12, 13 50

15 Rewritten Information Blocks 51

16 Physical tape format 51

16.1 Initial Erased Area 51
16.2 Logical Beginning of Tape Area (LBOT Area) 52
16.3 Usable area of the tape 52
16.4 Post Data erased area 52

Annexes

A Measurement of light transmittance of tape and leaders 53

B Measurement of bit shift 56

C Representation of 8-bit bytes by 10-bit patterns 59

D Recommendations for transportation 62

E Inhibitor tape 63

Copyright International Electrotechnical Commission
Provided by IHS under license with IEC
No reproduction or networking permitted without license from IHS Not for Resale

11319 93 ■ 4851903 0543401 823 ■

Foreword

ISO (the International Organization for Standardization) and IEC (the International Electrotechnical Commission) form the specialized system for worldwide standardization. National bodies that are members of ISO or IEC participate in the development of International Standards through technical committees established by the respective organization to deal with particular fields of technical activity. ISO and IEC technical committees collaborate in fields of mutual interest. Other international organizations, governmental and non-governmental, in liaison with ISO and IEC, also take part in the work.

In the field of information technology, ISO and IEC have established a joint technical committee, ISO/IEC JTC 1. Draft International Standards adopted by the joint technical committee are circulated to national bodies for voting. Publication as an International Standard requires approval by at least 75 % of the national bodies casting a vote.

International Standard ISO/IEC 11319 was prepared by the European Computer Manufacturers Association (as Standard ECMA-145) and was adopted, under a special "fast-track procedure", by Joint Technical Committee ISO/IEC JTC 1, *Information technology,* Sub-Committee 11, *Flexible magnetic media for digital data interchange,* in parallel with its approval by national bodies of ISO and IEC.

Annexes A, B and C form an integral part of this International Standard. Annexes D and E are for information only.

Copyright International Electrotechnical Commission
Provided by IHS under license with IEC
No reproduction or networking permitted without license from IHS
Not for Resale

Information technology - 8 mm wide magnetic tape cartridge for information interchange - Helical scan recording

Section 1 : General

1 Scope

This International Standard specifies the physical and magnetic characteristics of an 8 mm wide magnetic tape cartridge to enable interchangeability of such cartridges. It also provides a format and recording method, thus allowing, together with ISO 1001 for Magnetic Tape Labelling, full data interchange by means of such magnetic tape cartridges.

2 Conformance

A magnetic tape cartridge shall be in conformance with this International Standard if it satisfies all mandatory requirements specified herein. The tape requirements shall be satisfied throughout the extent of the tape.

3 Normative references

The following standards contain provisions which, through reference in this text, constitute provisions of this International Standard. At the time of publication, the editions indicated were valid. All standards are subject to revision, and parties to agreements based on this International Standard are encouraged to investigate the possibility of applying the most recent editions of the standards indicated below. Members of IEC and ISO maintain registers of currently valid International Standards.

ISO/R 527:1966, *Plastics - Determination of tensile properties.*

ISO 1001:1986, *Information processing - File structure and labelling of magnetic tapes for information interchange.*

ISO 1302:1978, *Technical drawings - Method of indicating surface texture on drawings.*

IEC 950:1990, *Safety of Information Technology Equipment, including Electrical Business Equipment.*

4 Definitions

For the purpose of this International Standard, the following definitions apply.

4.1 AC erase: A process of erasure utilizing alternating fields of decaying level.

4.2 Average Signal Amplitude: The average peak-to-peak value of the signal output of the read head measured over a minimum of 1,40 mm, exclusive of missing pulses.

4.3 azimuth: The angular deviation, in degrees of arc, of the recorded flux transitions on a track from the line normal to the track centreline.

4.4 back surface: The surface of the tape opposite to the magnetic coating used to record data.

4.5 bit cell: A distance along the track allocated for the recording of a Channel bit.

4.6 byte: An ordered set of bits acted upon as a unit.

4.7 cartridge: A case containing magnetic tape stored on twin reels.

4.8 Cyclic Redundancy Check (CRC) Character: A character used for error detection.

Copyright International Electrotechnical Commission
Provided by IHS under license with IEC
No reproduction or networking permitted without license from IHS Not for Resale

4.9 Error Correcting Code (ECC): A mathematical procedure yielding bytes used for the detection and correction of errors.

4.10 flux transition position: That point which exhibits the maximum free-space flux density normal to the tape surface.

4.11 flux transition spacing: The distance along a track between successive flux transitions.

4.12 magnetic tape: A tape that accepts and retains magnetic signals intended for input, output, and storage of data for information processing.

4.13 Master Standard Reference Tape: A tape selected as the standard for amplitude, Typical Field and Resolution.

NOTE 1 The Master Standard Reference Tape has been established by the SONY Corporation.

4.14 Physical Beginning of Tape (PBOT): The transition from the tape leader to the opaque area of the splice by which the translucent leader tape is joined to the magnetic tape.

4.15 Physical End of Tape (PEOT): The transition from the opaque area of the splice to the translucent trailer tape.

4.16 physical recording density: The number of recorded flux transitions per unit length of track, expressed in flux transitions per millimetre (ftpmm).

4.17 Secondary Reference Amplitude: The Average Signal Amplitude from the Secondary Standard Reference Tape when it is recorded with the Test Recording Current at 2126 ftpmm.

4.18 Secondary Reference Field: The Typical Field of the Secondary Standard Reference Tape.

4.19 Secondary Standard Reference Tape: A tape the performance of which is known and stated in relation to that of the Master Standard Reference Tape.

NOTE 2 Secondary Standard Reference Tapes can be ordered under the Part Number RSE-5001, until the year 2001, from the Sony Corporation, Magnetic Product Group, Data Media Sales Division, 6-7-35 Kitashinagawa, Shinagawa-ku, TOKYO 141, Japan.

It is intended that these be used for calibrating tertiary reference tapes for use in routine calibration.

4.20 Standard Reference Current (Ir): The current that produces the Secondary Reference Field.

4.21 Tape Reference Edge: The lower edge of the tape when the magnetic coating is facing the observer and the supply reel is to the observer's right.

4.22 Test Recording Current: The current that is 1,5 times the Standard Reference Current.

4.23 tone: A signal recorded at 98 ftpmm.

4.24 track: A diagonally positioned area on the tape along which a series of magnetic transitions may be recorded.

4.25 Typical Field: In the plot of the Average Signal Amplitude against the recording field at the physical recording density of 2 126 ftpmm, the minimum field that causes an Average Signal Amplitude equal to 90% of the maximum Average Signal Amplitude.

5 Environment and safety

The conditions specified below refer to ambient conditions immediately surrounding the cartridge. Cartridges exposed to environments outside these limits may still be able to function usefully; however, such exposure may cause permanent damage.

Copyright International Electrotechnical Commission
Provided by IHS under license with IEC
No reproduction or networking permitted without license from IHS
Not for Resale

5.1 Testing environment

Unless otherwise specified, tests and measurements made on the cartridge to check the requirements of this International Standard shall be carried out under the following conditions

temperature:	23 °C ± 2 °C
relative Humidity:	40 % to 60 %
conditioning period before testing:	24 h

5.2 Operating environment

Cartridges used for data interchange shall be capable of operating under the following conditions

temperature:	5 °C to 45 °C
relative Humidity:	20 % to 80 %
wet Bulb Temperature:	26 °C max.

There shall be no deposit of moisture on or in the cartridge.

Conditioning before operating:

If a cartridge has been exposed during storage and/or transportation to a condition outside the above values, before use the cartridge shall be conditioned in the operating environment for a time at least equal to the period during which it has been out of the operating environment, up to a maximum of 24 h.

NOTE 3 Rapid variations of temperature should be avoided.

5.3 Storage environment

For long-term or archival storage of cartridges the following conditions shall be observed

temperature:	5 °C to 32 °C
relative Humidity:	20 % to 60 %
wet Bulb Temperature:	26 °C max.

The stray magnetic field at any point on the tape shall not exceed 4 000 A/m. There shall be no deposit of moisture on or in the cartridge.

5.4 Transportation

Recommended limits for the environment to which a cartridge may be subjected during transportation, and the precautions to be taken to minimize the possibility of damage, are provided in annex D.

5.5 Safety

The cartridge and its components shall satisfy the requirements of IEC 950.

5.6 Flammability

The cartridge and its components shall be made from materials which, if ignited from a match flame, do not continue to burn in a still carbon dioxide atmosphere.

Section 2 : Requirements for the case

6 Dimensional and mechanical characteristics of the case

6.1 General

The case of the cartridge shall consist of

- an upper half,
- a lower half,
- a lid pivotally mounted on the upper half.

Copyright International Electrotechnical Commission
Provided by IHS under license with IEC
No reproduction or networking permitted without license from IHS
Not for Resale

In the drawings, an embodiment of the cartridge is shown as an example.

Figure 1 is a perspective view of the cartridge seen from the top.

Figure 2 is a perspective view of the cartridge seen from the bottom.

Figure 3 shows the top side with the lid closed using third angle projection.

Figure 4 shows the bottom side, datum and support areas.

Figure 5 shows the bottom side with the lid removed.

Figure 6 shows the enlarged view of the datum and recognition holes.

Figure 7 shows the cross-sections through the light path holes, the recognition holes and the write-inhibit hole.

Figure 8 shows details of the lid when closed, rotating and open.

Figure 9 shows the details of the lid release insertion channel.

Figure 10 shows the lid lock release requirements.

Figure 11 shows the reel lock release requirements.

Figure 12 shows the reel unlock force direction.

Figure 13 shows the lid release force direction.

Figure 14 shows the lid opening force direction.

Figure 15 shows the light path and light window.

Figure 16 shows the internal tape path and light path.

Figure 17 shows the cartridge reel and a cross-section view of the cartridge reel.

Figure 18 shows the cross-section view of the cartridge reel interface with the drive spindle.

Figure 19 shows the tape access cavity clearance requirements.

The dimensions are referred to three orthogonal Reference Planes X, Y and Z.

6.2 Overall dimension (figure 3)

The overall dimensions of the case with the lid in the closed position shall be

L_1 = 62,5 mm ± 0,3 mm

L_2 = 95,0 mm ± 0,2 mm

L_3 = 15,0 mm ± 0,2 mm

The distance from the rear side to plane X shall be

L_4 = 47,35 mm ± 0,15 mm

The distance from the right side to plane Y shall be

L_5 = 13,0 mm ± 0,1 mm

6.3 Holding areas

The holding areas, shown hatched in figure 3, shall be the areas along which the cartridge shall be held down when inserted in the drive. Their position and dimensions shall be

L_6 = 12,0 mm max.

L_7 = 3,0 mm min.

Copyright International Electrotechnical Commission
Provided by IHS under license with IEC
No reproduction or networking permitted without license from IHS Not for Resale

6.4 Cartridge insertion

The cartridge shall have asymmetrical features to prevent insertion in the drive in other than the correct orientation. These consist of a channel, a recess and an incline.

The channel (figures 3 and 9) shall provide for an unobstructed path, when the lid is closed and locked, to unlock the lid. The dimensions shall be

L_8 = 79,7 mm ± 0,2 mm

L_9 = 1,0 mm ± 0,1 mm

L_{10} = 0,7 mm ± 0,1 mm

L_{11} = 1,0 mm min.

L_{12} = 1,2 mm ± 0,1 mm

L_{13} = 0,8 mm ± 0,1 mm

L_{14} = 1,2 mm ± 0,1 mm

L_{15} = 0,5 mm ± 0,1 mm

L_{16} = 1,5 mm ± 0,1 mm

L_{17} = 1,0 mm ± 0,1 mm

L_{18} = 3,8 mm ± 0,1 mm

L_{19} = 0,2 mm ± 0,2 mm

L_{20} = 2,3 mm min.

L_{21} = 2,5 mm ± 0,2 mm

The recess dimensions (figures 3 and 5) shall be

L_{22} = 7,5 mm max.

L_{23} = 11,0 mm ± 0,2 mm

L_{24} = 1,5 mm ± 0,1 mm

L_{25} = 1,5 mm ± 0,1 mm

The incline (figure 8) is part of the lid structure and the dimensions shall be

$$L_{26} = 7{,}7\ \text{mm}\ {}^{+\,0{,}0}_{-\,2{,}5}\ \text{mm}$$

$$L_{27} = 0{,}55\ \text{mm}\ {}^{+\,0{,}05}_{-\,0{,}10}\ \text{mm}$$

A_1 = 17,5° ± 4,0°

6.5 Window (figure 1)

A window may be provided on the top side so that a part of the reel is visible. The window, if provided, shall not extend beyond the height of the cartridge.

Copyright International Electrotechnical Commission
Provided by IHS under license with IEC
No reproduction or networking permitted without license from IHS
Not for Resale

6.6 Loading grips (figure 3)

The cartridge shall have loading grips for automatic loading into a drive.

The dimensions and positions of the loading grips shall be

L_{28} = 39,35 mm ± 0,20 mm

L_{29} = 1,5 mm ± 0,1 mm

L_{30} = 5,0 mm ± 0,3 mm

L_{31} = 2,0 mm ± 0,2 mm

A_2 = 90° ± 5°

6.7 Label areas (figure 3)

A portion of the rear side of the cartridge and a portion of the top side of the cartridge may be used for labels. The rear side area provides for readability of the label when it is stacked or inserted into the drive. The position and the size of the labels shall not interfere with the operation or clearance requirements of the cartridge component parts.

The area used for labels on the top side shall not extend beyond the inner edge of the holding areas defined by L_6 and L_7.

The position and dimensions of the rear side label area shall be

L_{32} = 0,5 mm min.

L_{33} = 1,5 mm min.

L_{34} = 80,0 mm max.

The depth of the label depression shall be 0,3 mm max.

6.8 Datum areas and datum holes (figures 4, 5 and 6)

The annular datum areas A, B and C shall lie in plane Z. They determine the vertical position of the cartridge in the drive. Each shall have a diameter D_1 equal to 6,0 mm ± 0,1 mm and be concentric with the respective datum hole.

The centres of datum holes A and B lie in plane X.

The centre of the circular datum hole A shall be at the intersection of planes X and Y (see figure 5).

The distance from the centre of datum hole B to plane Y (see figure 4) shall be

L_{35} = 68,0 mm ± 0,1 mm

The distance from the centre of the circular datum hole C to plane Y (see figure 6) shall be

L_{36} = 10,20 mm ± 0,05 mm

The distance from the centre of datum hole D to plane Y (see figure 6) shall be

L_{37} = 79,2 mm ± 0,1 mm

The distance from the centres of datum holes C and D to plane X (see figure 5) shall be

L_{38} = 36,35 mm ± 0,08 mm

The diameter of datum hole A and datum hole C shall be $3{,}00\ ^{+\,0{,}05}_{-\,0{,}00}$ mm. The dimensions of datum hole A and datum hole C shall be

Copyright International Electrotechnical Commission
Provided by IHS under license with IEC
No reproduction or networking permitted without license from IHS
Not for Resale

$L_{39} = 1{,}2\ \text{mm}\ ^{+\ 1{,}0}_{-\ 0{,}0}\ \text{mm}$

$L_{40} = 2{,}6$ mm min.

$L_{41} = 1{,}5$ mm min.

$L_{42} = 4{,}0$ mm min.

$L_{43} = 0{,}3$ mm max.

$A_3 = 45° \pm 1°$

The dimensions of datum hole B and datum hole D shall be

$L_{39} = 1{,}2\ \text{mm}\ ^{+\ 1{,}0}_{-\ 0{,}0}\ \text{mm}$

$L_{40} = 2{,}6$ mm min.

$L_{41} = 1{,}5$ mm min.

$L_{42} = 4{,}0$ mm min.

$L_{43} = 0{,}3$ mm max.

$L_{44} = 3{,}00\ \text{mm}\ ^{+\ 0{,}05}_{-\ 0{,}00}\ \text{mm}$

$L_{45} = 3{,}5$ mm $\pm$ 0,1 mm

$L_{46} = 3{,}00$ mm $\pm$ 0,05 mm

$A_3 = 45° \pm 1°$

$R_1 = 1{,}7$ mm min.

6.9 Support areas

The cartridge support areas are shown shaded in figure 4. Support areas A, B and C shall be coplanar with datum areas A, B and C, respectively, within ± 0,1 mm. Support area D shall be coplanar with datum plane Z within ± 0,15 mm.

The areas within L_{49} of the edge of the cartridge shall be recessed from the support areas.

The dimensions and positions of the support areas shall be

$L_{35} = 68{,}0$ mm $\pm$ 0,1 mm

$L_{47} = 10{,}0$ mm $\pm$ 0,1 mm

$L_{48} = 11{,}0$ mm $\pm$ 0,1 mm

$L_{49} = 0{,}5$ mm $\pm$ 0,1 mm

$L_{50} = 7{,}0$ mm $\pm$ 0,1 mm

$L_{51} = 30{,}0$ mm $\pm$ 0,1 mm

$L_{52} = 5{,}5$ mm $\pm$ 0,1 mm

$L_{53} = 64{,}5$ mm $\pm$ 0,2 mm

6.10 Recognition holes (figures 5, 6 and 7)

There shall be 5 recognition holes numbered 1 to 5 as shown in figure 6.

Copyright International Electrotechnical Commission
Provided by IHS under license with IEC
No reproduction or networking permitted without license from IHS
Not for Resale

Their positions shall be defined by

L_{54} = 43,35 mm ± 0,15 mm

L_{55} = 3,7 mm ± 0,1 mm

L_{56} = 2,3 mm ± 0,1 mm

L_{57} = 6,4 mm ± 0,1 mm

L_{58} = 3,7 mm ± 0,1 mm

L_{59} = 2,3 mm ± 0,1 mm

L_{60} = 6,4 mm ± 0,1 mm

L_{61} = 79,0 mm ± 0,2 mm

All recognition holes shall have the cross-section F-F shown in figure 7 and shall have a diameter of 3,0 mm ± 0,1 mm

$L_{62} = 1{,}2\ \text{mm}\ ^{+\,0,3}_{-\,0,1}\ \text{mm}$

L_{63} = 5,0 mm min.

One of the cross-sections shows a recognition hole closed by a plug, the other shows the plug punched out. These plugs shall withstand an applied force of 0,5 N max without being punched out.

This International Standard prescribes the following states of these holes.

- Recognition hole 1 shall be closed.
- Recognition hole 2 shall be closed for tape of 13 µm nominal thickness.
- Recognition hole 2 shall be open for tape of 10 µm nominal thickness.
- Recognition holes 3, 4 and 5 shall be closed.

6.11 Write-inhibit Hole (figures 6 and 7)

The position and dimension of the Write-inhibit Hole shall be defined by

L_{55} = 3,7 mm ± 0,1 mm

$L_{62} = 1{,}2\ \text{mm}\ ^{+\,0,3}_{-\,0,1}\ \text{mm}$

L_{63} = 5,0 mm min.

L_{64} = 10,0 mm ± 0,1 mm

The diameter of the hole shall be 3,0 mm ± 0,1 mm

When the Write-inhibit Hole is open, recording on the tape is inhibited. When it is closed, recording is enabled.

The case may have a movable element allowing the Write-inhibit Hole to be opened or closed. If present, this element shall be such that the state of the Write-inhibit Hole shall be visible (see figure 3 as an example). The Write-inhibit hole closure shall be constructed to withstand a force of 0,5 N. The force required to open or close the Write-inhibit Hole shall be between 1 N and 15 N.

6.12 Pre-positioning surfaces (figures 3 and 5)

These surfaces determine the position of the cartridge in the Y direction when inserted into the drive loading slot.

Copyright International Electrotechnical Commission
Provided by IHS under license with IEC
No reproduction or networking permitted without license from IHS
Not for Resale

The dimensions of the pre-positioning surfaces shall be

L_{25} = 1,5 mm ± 0,1 mm

L_{65} = 2,4 mm $^{+\ 0,0}_{-\ 0,1}$ mm

L_{66} = 2,4 mm $^{+\ 0,0}_{-\ 0,1}$ mm

L_{67} = 1,0 mm ± 0,1 mm

L_{68} = 69,0 mm ± 0,2 mm

L_{69} = 14,65 mm ± 0,10 mm

L_{70} = 13,15 mm ± 0,10 mm

A_4 = 45° ± 1°

6.13 Cartridge lid (figures 3 and 8)

The cartridge shall include a lid for protection of the tape during handling, storage and transportation. The lid consists of two parts, the main part and an auxiliary part.

The main part rotates around axis A (see figure 8) which is fixed relative to the case.

The location of axis A shall be defined by L_{27} and

L_{71} = 7,5 mm ± 0,1 mm

The auxiliary part rotates around axis B which is fixed relative to the main part of the lid and moves with it. When the lid is in the closed position, the location of axis B shall be defined by

L_{72} = 7,0 mm ± 0,1 mm

L_{73} = 10,1 mm ± 0,1 mm

The rotation of the auxiliary part is controlled, by a cam at each end, to give the path indicated in figure 8.

When the lid is completely open, neither part shall extend above a plane located L_{77} above and parallel to plane Z.

L_{74} = 14,8 mm min.

L_{75} = 11,5 mm ± 0,2 mm

L_{76} = 1,2 mm ± 0,1 mm

L_{77} = 22,3 mm max.

A_5 = 85° ± 2°

When the lid is in a partially open position, neither part shall extend above a plane located L_{78} above and parallel to plane Z.

L_{78} = 22,5 mm max.

R_2 = 14,9 mm max.

The main part is shown in figures 3 and 8.

L_{71} = 7,5 mm ± 0,1 mm

L_{79} = 8,4 mm max.

Copyright International Electrotechnical Commission
Provided by IHS under license with IEC
No reproduction or networking permitted without license from IHS
Not for Resale

L_{80} = 15,2 mm $^{+\ 0,0}_{-\ 0,5}$ mm

L_{81} = 15,3 mm $^{+\ 0,0}_{-\ 0,3}$ mm

L_{82} = 13,15 mm ± 0,10 mm

R_3 = 14,7 mm $^{+\ 0,0}_{-\ 0,3}$ mm

The design of the locking mechanism is not specified by this International Standard except that it shall be operated by a release pin in the drive. In the lid closed and locked position, access to the lid lock release shall be unobstructed in the hatched area (see figure 10) defined by

L_{83} = 2,0 mm ± 0,1 mm

L_{84} = 6,3 mm ± 0,2 mm

L_{85} = 1,2 mm ± 0,1 mm

A_6 = 45° ± 1°

A_7 = 15° ± 1°

The lid release mechanism shall be actuated when the drive release pin is in the shaded area (see figure 10) defined by

L_{83} = 2,0 mm ± 0,1 mm

L_{86} = 8,2 mm ± 0,2 mm

L_{87} = 0,7 mm ± 0,2 mm

A_8 = 15° ± 1°

The force needed to unlock the lid lock shall not exceed 0,25 N in the direction shown in figure 13.

The force needed to open the lid shall not exceed 1,0 N in the direction shown in figure 14.

6.14 Cartridge reel lock (figure 11)

The reels shall be locked when the cartridge is removed from the tape drive. The design of the locking mechanism is not specified by this International Standard except that it shall be operated by a release pin in the drive.

The release mechanism shall be accessed through a hole in the case (see figure 5) defined by

L_{88} = 34,5 mm ± 0,1 mm

L_{89} = 35,85 mm ± 0,15 mm

L_{90} = 4,0 mm ± 0,1 mm

L_{91} = 6,5 mm min.

The reels shall be unlocked when the operating face of the release pin is located L_{95} from plane X. In this position there shall be a clearance of L_{96} between the locking mechanism and the inside of the rear wall of the cartridge.

Copyright International Electrotechnical Commission
Provided by IHS under license with IEC
No reproduction or networking permitted without license from IHS
Not for Resale

The dimensions of the release mechanism (see figure 11) shall be

$L_{92} = 3{,}2\ \text{mm}\ ^{+\ 0{,}3}_{-\ 0{,}2}\ \text{mm}$

$L_{93} = 4{,}0\ \text{mm} \pm 0{,}1\ \text{mm}$

$L_{94} = 39{,}0\ \text{mm}\ ^{+\ 2{,}0}_{-\ 0{,}0}\ \text{mm}$

$L_{95} = 41{,}75\ \text{mm}\ ^{+\ 0{,}50}_{-\ 0{,}00}\ \text{mm}$

$L_{96} = 0{,}5\ \text{mm min.}$

$L_{97} = 7{,}8\ \text{mm max.}$

$L_{98} = 4{,}0\ \text{mm} \pm 0{,}1\ \text{mm}$

$A_9 = 60{,}0° \pm 1{,}0°$

$R_4 = 0{,}3\ \text{mm max.}$

The force needed to unlock the reel lock in the direction shown in figure 12 shall not exceed 1,0 N.

6.15 Reel access holes (figure 5)

The case shall have two circular reel access holes which shall allow penetration of the drive spindles.

The dimension and positions of the access holes shall be

$L_{99} = 23{,}00\ \text{mm} \pm 0{,}05\ \text{mm}$

$L_{100} = 11{,}40\ \text{mm} \pm 0{,}05\ \text{mm}$

$L_{101} = 46{,}2\ \text{mm} \pm 0{,}1\ \text{mm}$

$D_2 = 18{,}80\ \text{mm} \pm 0{,}05\ \text{mm}$

6.16 Interface between the reels and the drive spindles (figures 17 and 18)

The drive spindles shall engage the reels in the area defined by

$L_{102} = 5{,}4\ \text{mm} \pm 0{,}1\ \text{mm}$

$L_{103} = 4{,}4\ \text{mm} \pm 0{,}1\ \text{mm}$

$L_{104} = 0{,}6\ \text{mm max.}$

$L_{105} = 2{,}4\ \text{mm} \pm 0{,}1\ \text{mm}$

$L_{106} = 0{,}2\ \text{mm max.}$

$L_{107} = 2{,}4\ \text{mm} \pm 0{,}2\ \text{mm}$

$A_{10} = 45° \pm 1°$

$A_{11} = 15° \pm 1°$

$A_{12} = 60° \pm 1°$

$R_5 = 0{,}2\ \text{mm max.}$

Copyright International Electrotechnical Commission
Provided by IHS under license with IEC
No reproduction or networking permitted without license from IHS
Not for Resale

$D_3 = 6{,}50\ \text{mm}\ ^{+\ 0{,}08}_{-\ 0{,}00}\ \text{mm}$

$D_4 = 10{,}00\ \text{mm}\ ^{+\ 0{,}08}_{-\ 0{,}00}\ \text{mm}$

$D_5 = 16{,}0\ \text{mm max.}$

$D_6 = 18{,}0\ \text{mm}\ ^{+\ 0{,}0}_{-\ 0{,}1}\ \text{mm}$

Depth L_{108} of reel driving hole shall be effective to the diameter D_3 .

$L_{108} = 9{,}4\ \text{mm min.}$

The reel spring force F shall be 0,6 N ± 0,2 N in the direction shown in figure 18 when the cartridge is mounted in the drive and the support area is L_{110} from datum plane Z.

$L_{109} = 7{,}05\ \text{mm} \pm 0{,}10\ \text{mm}$

$L_{110} = 0{,}6\ \text{mm} \pm 0{,}2\ \text{mm}$

$L_{111} = 7{,}5\ \text{mm max.}$

$L_{112} = 8{,}0\ \text{mm max.}$

$A_{13} = 60° \pm 1°$

6.17 Light path (figures 5, 7, 15 and 16)

A light path shall be provided for sensing the leader and trailer tapes. When the lid is open, an unobstructed light path shall exist from the D_7 diameter light path hole to the outside of the cartridge via square holes of side L_{116} (see cross-section D-D in figure 7) and the light window in the cartridge lid.

$L_{88} = 34{,}5\ \text{mm} \pm 0{,}1\ \text{mm}$

$L_{113} = 8{,}35\ \text{mm} \pm 0{,}10\ \text{mm}$

$L_{114} = 0{,}5\ \text{mm max.}$

$L_{115} = 6{,}05\ \text{mm} \pm 0{,}10\ \text{mm}$

$L_{116} = 2{,}5\ \text{mm} \pm 0{,}4\ \text{mm}$

$L_{117} = 12{,}5\ \text{mm min.}$

$L_{118} = 3{,}8\ \text{mm} \pm 0{,}1\ \text{mm}$

$L_{119} = 2{,}5\ \text{mm} \pm 0{,}4\ \text{mm}$

$L_{120} = 6{,}05\ \text{mm} \pm 0{,}10\ \text{mm}$

$A_{14} = 45° \pm 1°$

$A_{15} = 5{,}50° \pm 0{,}25°$

$D_7 = 6{,}5\ \text{mm}\ ^{+\ 0{,}3}_{-\ 0{,}0}\ \text{mm}$

6.18 Position of the tape in the case (figure 16)

The tape shall run between two guide surfaces in a plane parallel to datum plane X and L_{121} from it.

$L_{121} = 12{,}46\ \text{mm} \pm 0{,}10\ \text{mm}$

Copyright International Electrotechnical Commission
Provided by IHS under license with IEC
No reproduction or networking permitted without license from IHS
Not for Resale

The guide surfaces shall have a radius of R_6 and shall be tangential, as shown in figure 16, to lines tangential to the reel hubs that extend to points outside the case . These points shall be defined by

L_{122} = 76,28 mm ± 0,30 mm

L_{123} = 27,15 mm ± 0,20 mm

L_{124} = 31,15 mm ± 0,20 mm

L_{125} = 9,67 mm ± 0,10 mm

R_6 = 1,5 mm min.

6.19 Tape path zone (figures 16 and 17)

When the cartridge is inserted into the drive, the tape is pulled outside the case by tape guides and is no longer in contact with the guide surfaces. The tape path zone of the case is the zone in which the tape shall be able to move freely. This zone shall be maintained for both sides of the case and shall be defined by

L_{122} = 76,28 mm ± 0,30 mm

L_{123} = 27,15 mm ± 0,20 mm

L_{124} = 31,15 mm ± 0,20 mm

L_{125} = 9,67 mm ± 0,10 mm

L_{126} = 23,0 mm ± 0,1 mm

L_{127} = 0,3 mm min.

L_{128} = 46,2 mm ± 0,2 mm

L_{129} = 11,4 mm ± 0,1 mm

L_{130} = 0,3 mm min.

$D_8 = 16{,}05 \text{ mm} \begin{smallmatrix} +\ 0{,}00 \\ -\ 0{,}10 \end{smallmatrix} \text{ mm}$

6.20 Tape access cavity (figure 5)

When the cartridge is inserted into the drive, tape guides in the drive pull out the tape into the drive tape path. The shape and dimensions of the access cavity for these tape guides shall be defined as follows. The two radii R_7 are centred on datum holes A and B.

R_7 = 2,3 mm ± 0,1 mm

The two radii R_8 are centred on the centres of the reel access holes.

R_8 = 24,15 mm ± 0,10 mm

L_{67} = 1,0 mm ± 0,1 mm

L_{68} = 69,0 mm ± 0,2 mm

L_{131} = 3,81 mm ± 0,10 mm

6.21 Tape access cavity clearance requirements (figure 19)

The case design shall provide clearance for drive tape threading mechanisms and shall be

L_{132} = 1,2 mm max.

$L_{133} = 1{,}15 \text{ mm} \begin{smallmatrix} +\ 0{,}20 \\ -\ 0{,}00 \end{smallmatrix} \text{ mm}$

Copyright International Electrotechnical Commission
Provided by IHS under license with IEC
No reproduction or networking permitted without license from IHS
Not for Resale

L_{134} = 14,0 mm $^{+\ 0,0}_{-\ 0,2}$ mm

L_{135} = 66,8 mm min.

L_{136} = 10,0 mm min.

A_{16} = 49° max.

Copyright International Electrotechnical Commission
Provided by IHS under license with IEC
No reproduction or networking permitted without license from IHS
Not for Resale

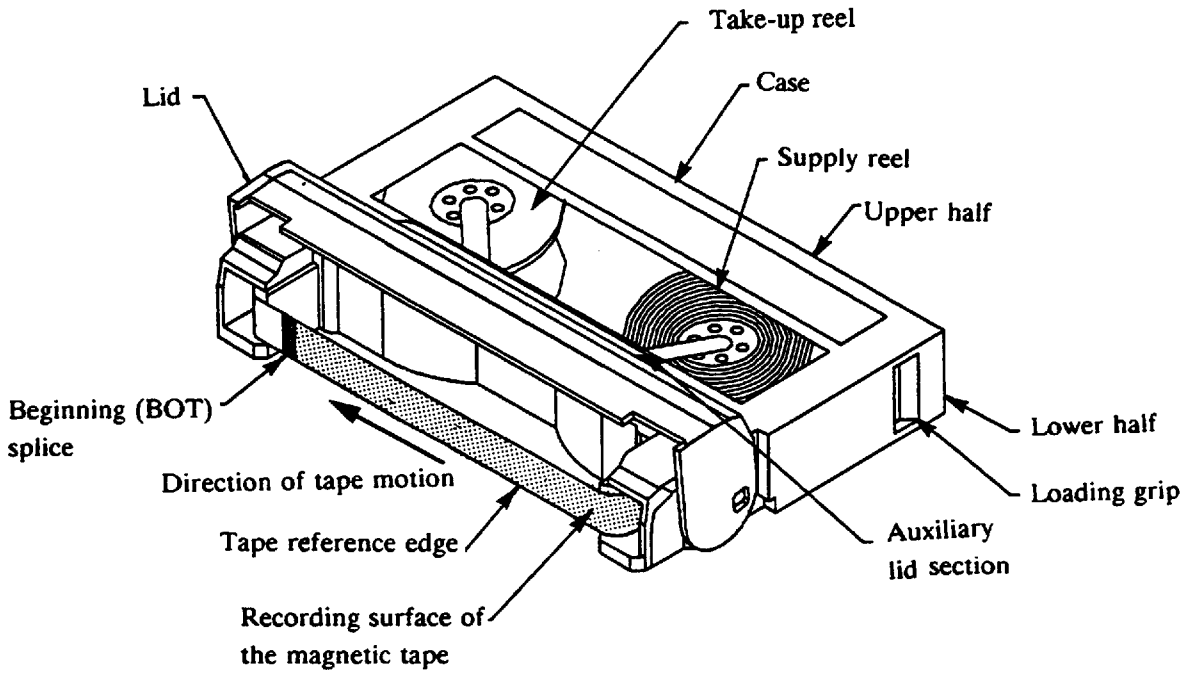

Figure 1 - Tape cartridge assembly bottom view (lid open)

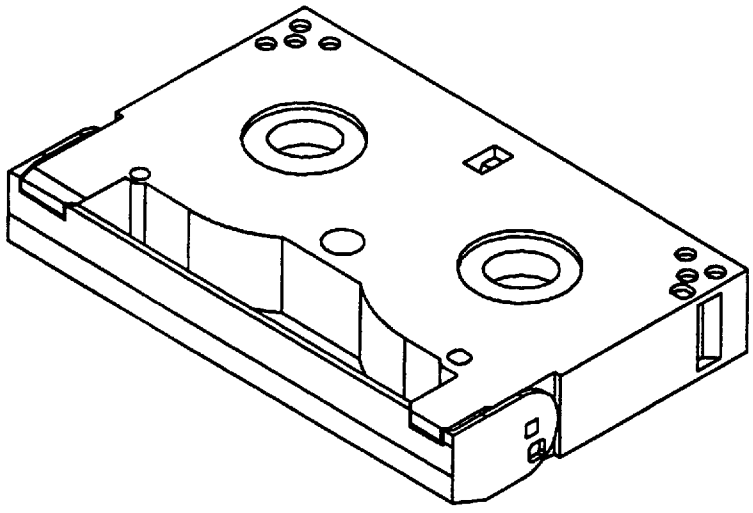

Figure 2 - Tape cartridge assembly bottom view (lid closed)

Copyright International Electrotechnical Commission
Provided by IHS under license with IEC
No reproduction or networking permitted without license from IHS
Not for Resale

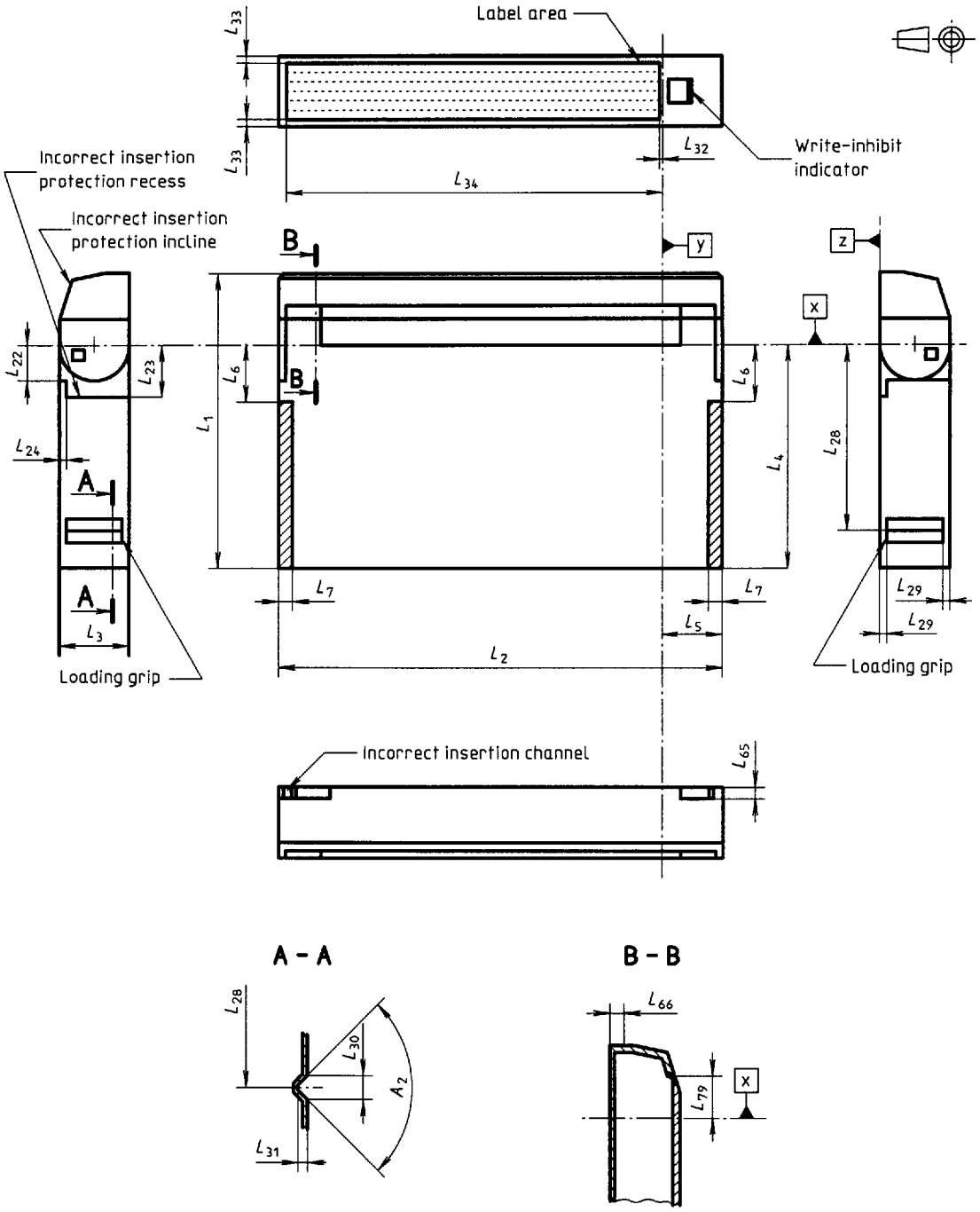

Figure 3 - Top side (lid closed)

Copyright International Electrotechnical Commission
Provided by IHS under license with IEC
No reproduction or networking permitted without license from IHS
Not for Resale

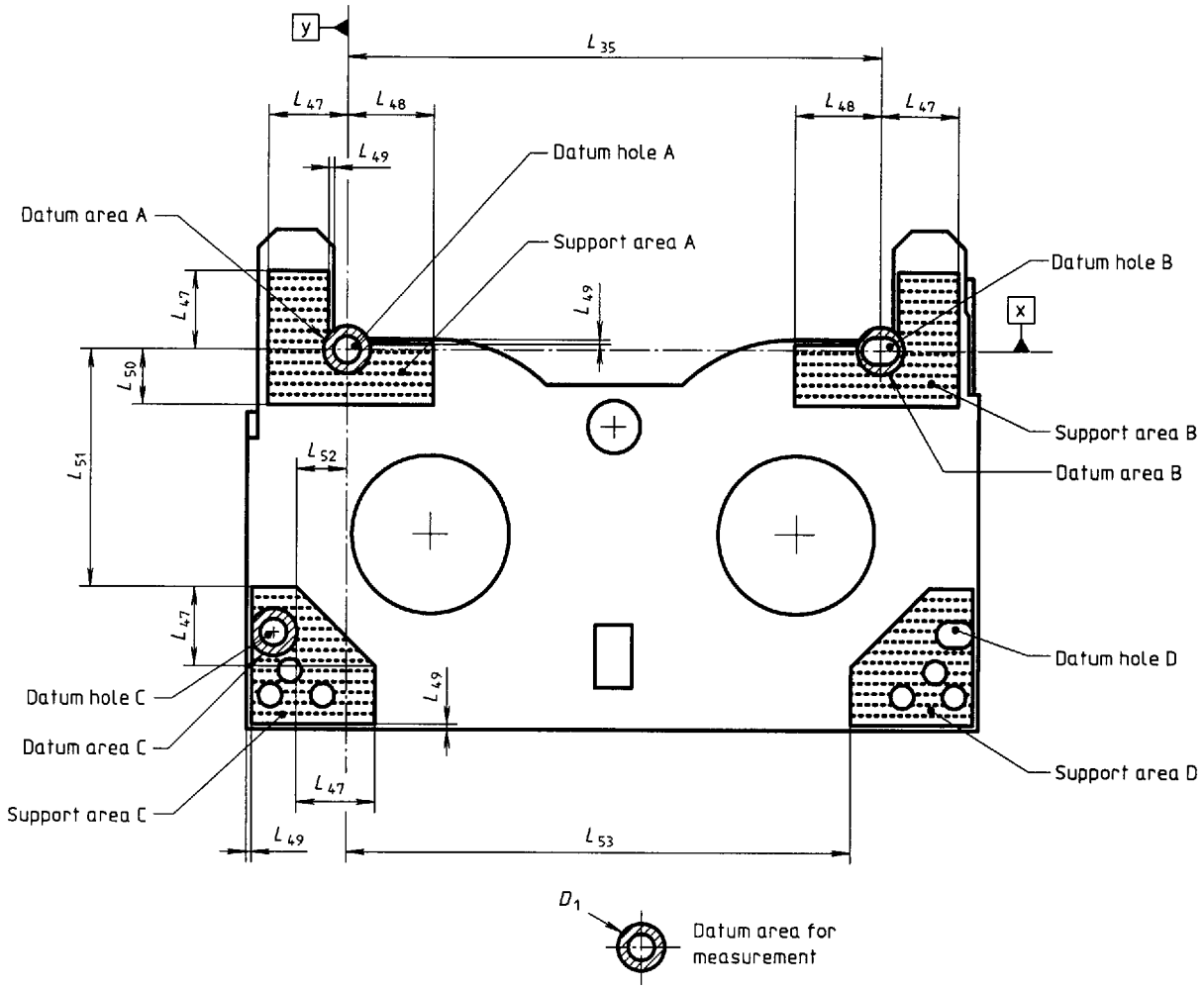

Figure 4 - Bottom side, datum and support areas

Copyright International Electrotechnical Commission
Provided by IHS under license with IEC
No reproduction or networking permitted without license from IHS
Not for Resale

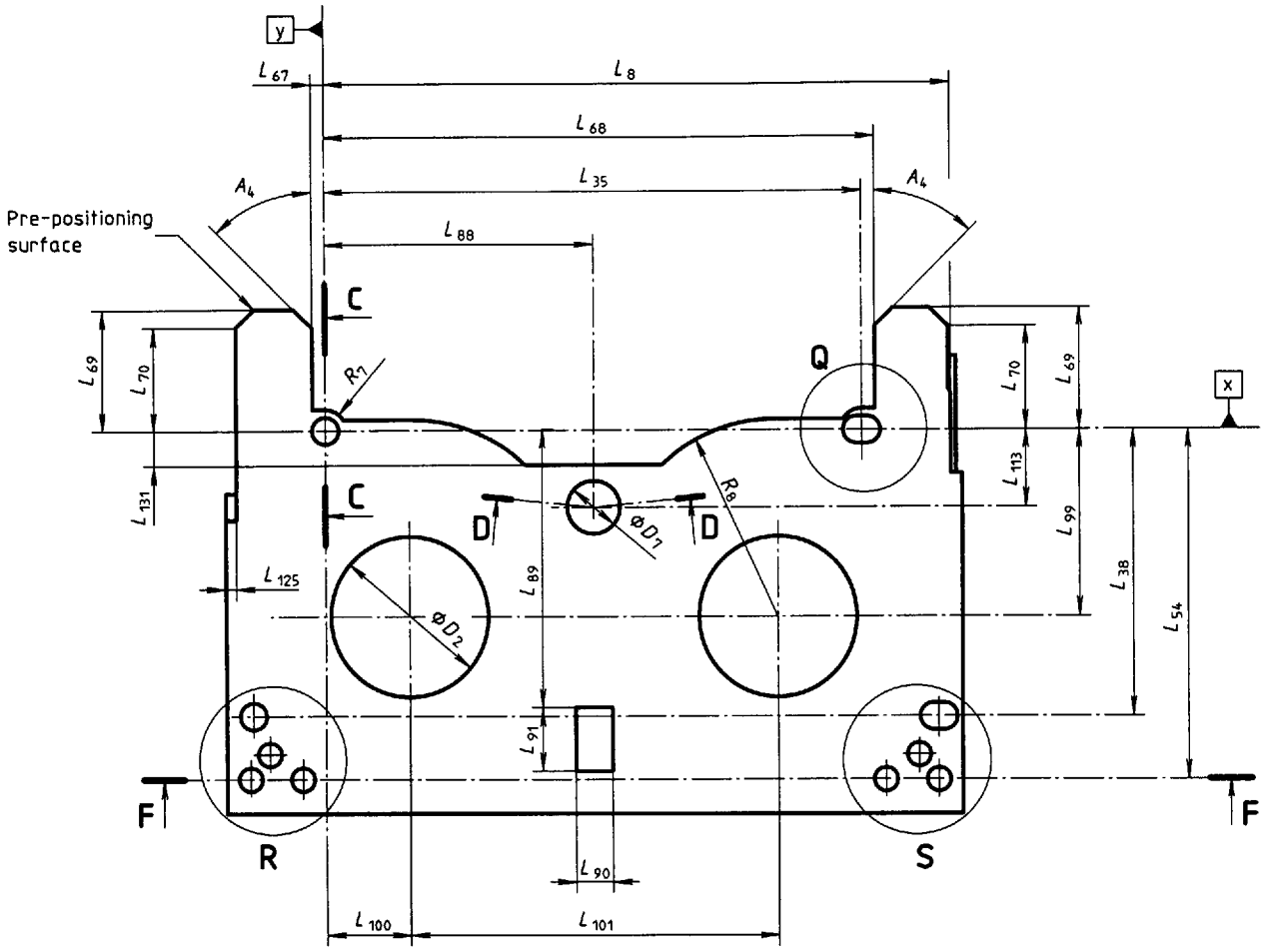

Figure 5 - Bottom side (lid removed)

Copyright International Electrotechnical Commission
Provided by IHS under license with IEC
No reproduction or networking permitted without license from IHS
Not for Resale

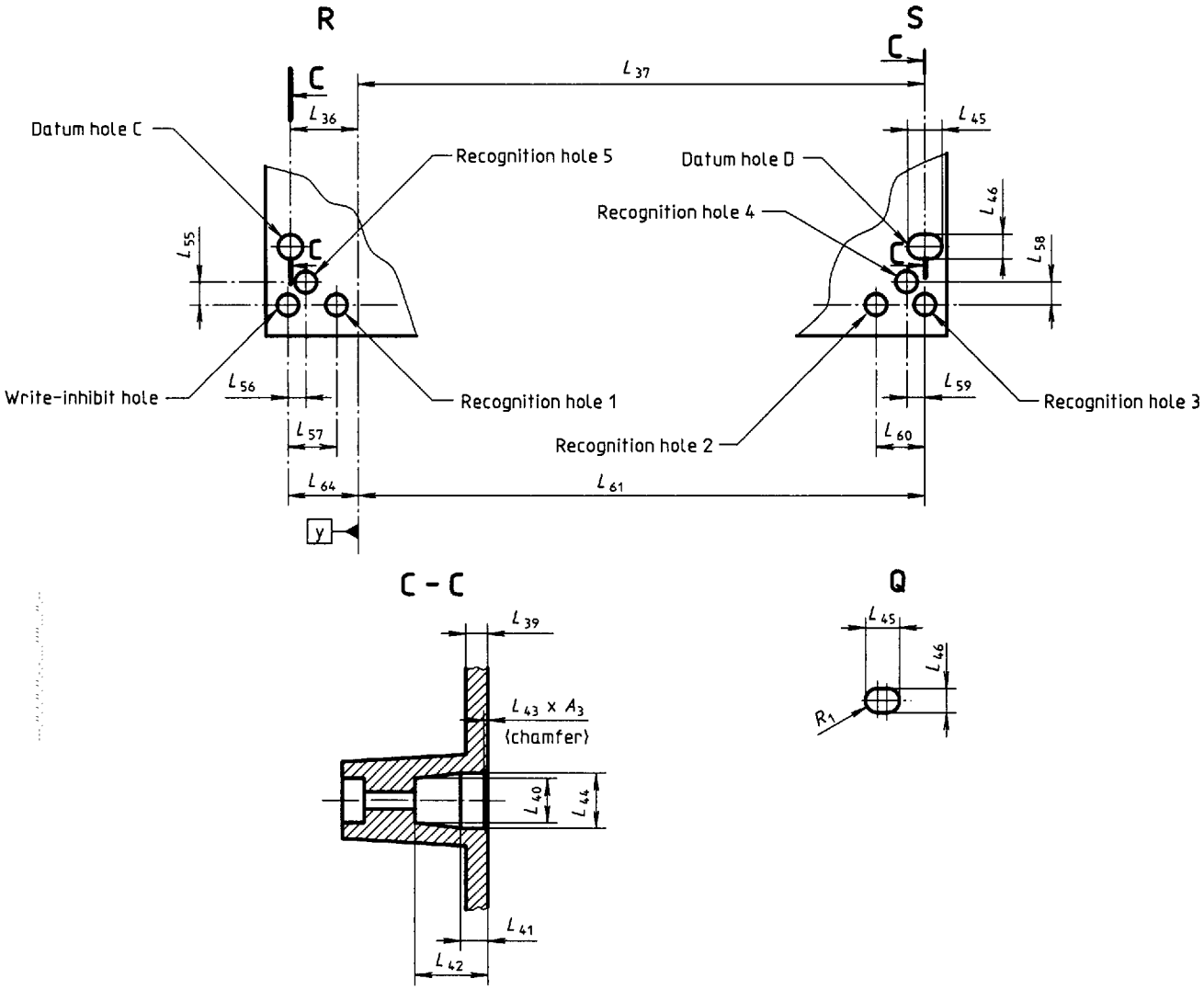

Figure 6 - Details of datum and recognition holes

Copyright International Electrotechnical Commission
Provided by IHS under license with IEC
No reproduction or networking permitted without license from IHS
Not for Resale

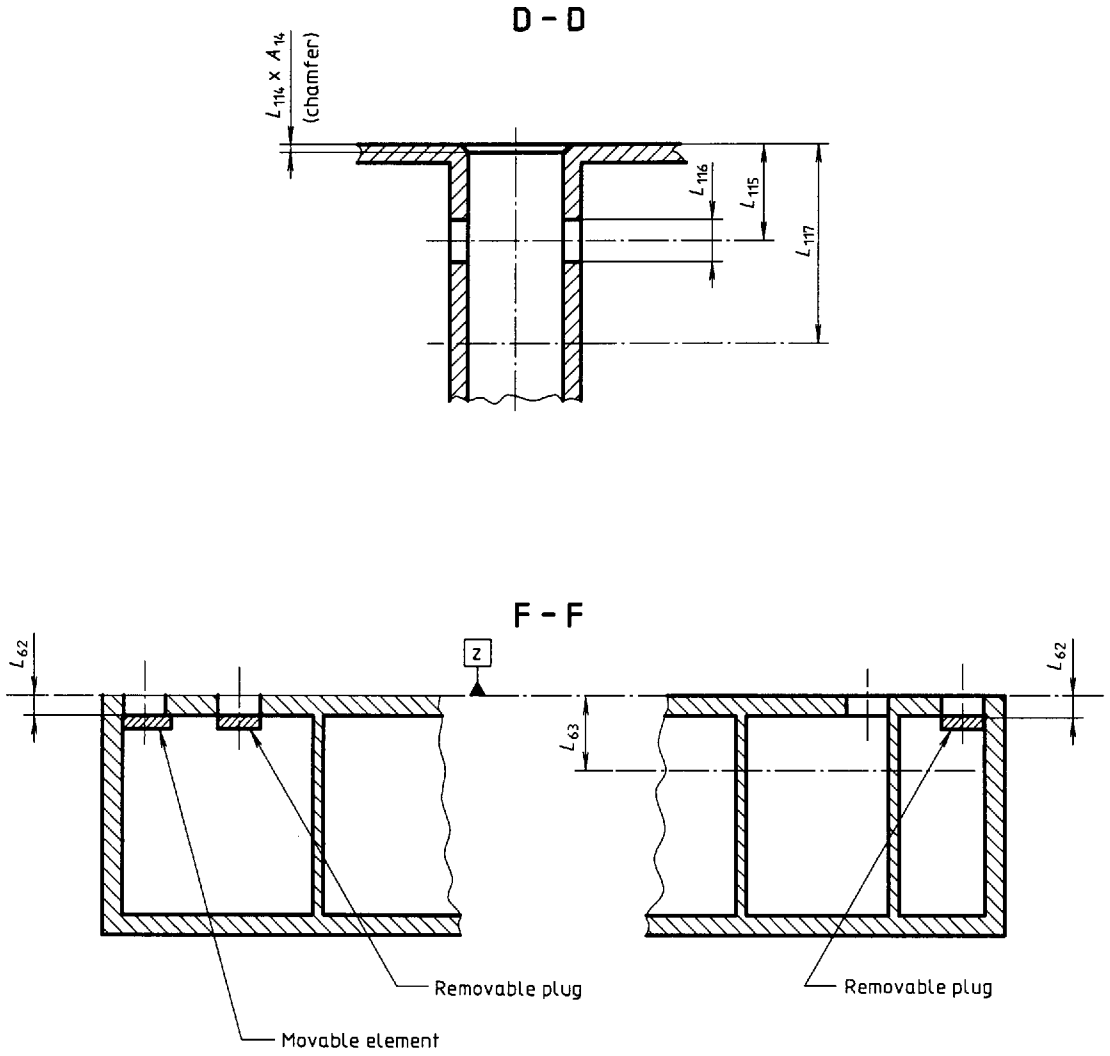

Figure 7 - Cross-sections of light path holes, recognition holes and write-inhibit hole

Copyright International Electrotechnical Commission
Provided by IHS under license with IEC
No reproduction or networking permitted without license from IHS
Not for Resale

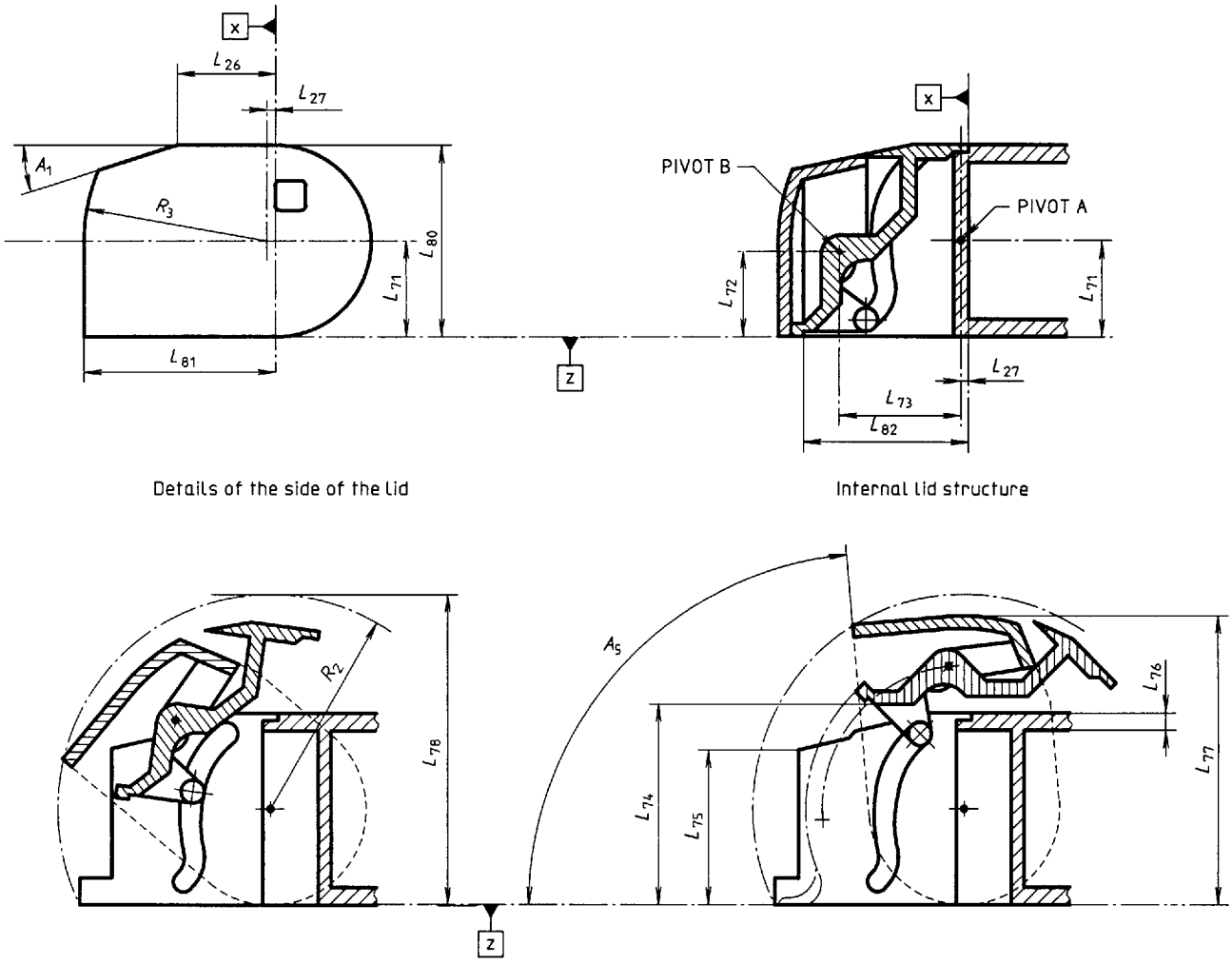

Figure 8 - Lid

Copyright International Electrotechnical Commission
Provided by IHS under license with IEC
No reproduction or networking permitted without license from IHS
Not for Resale

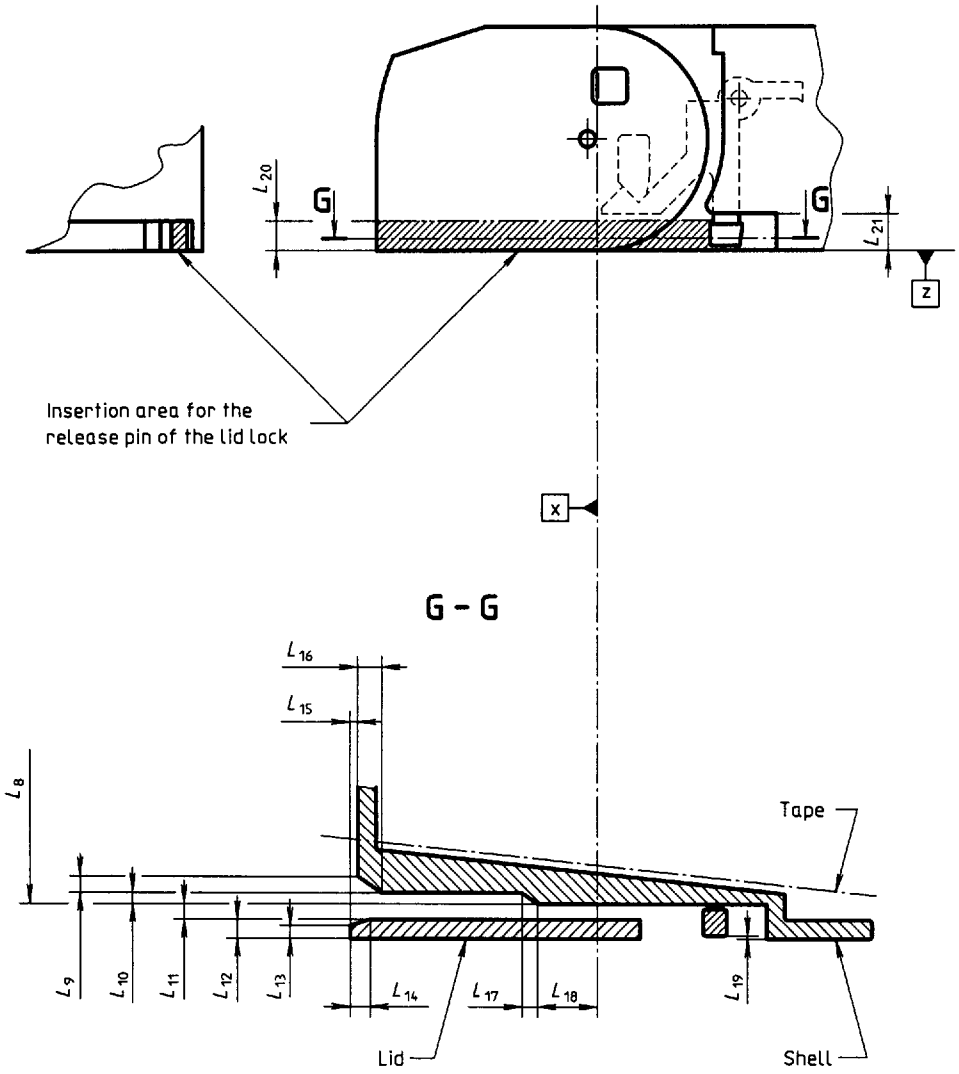

Figure 9 - Lid release insertion channel

Copyright International Electrotechnical Commission
Provided by IHS under license with IEC
No reproduction or networking permitted without license from IHS
Not for Resale

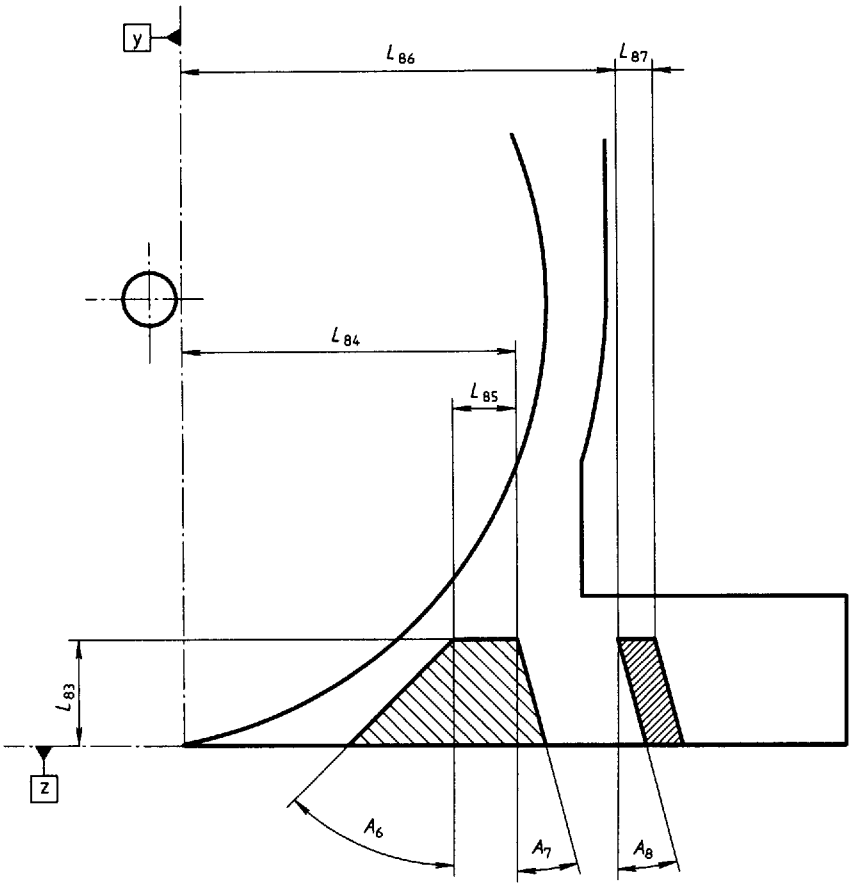

Figure 10 - Lid release requirement

Copyright International Electrotechnical Commission
Provided by IHS under license with IEC
No reproduction or networking permitted without license from IHS
Not for Resale

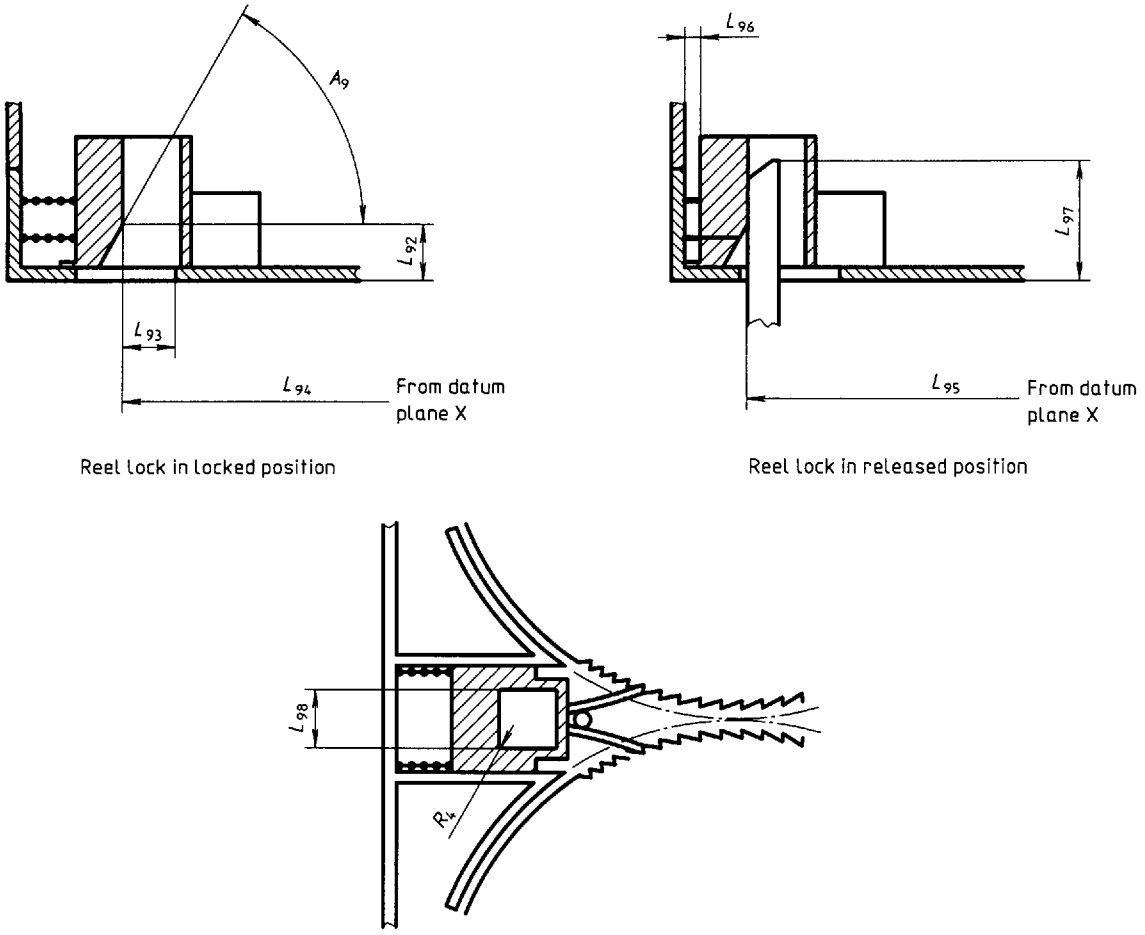

Figure 11 - Reel lock release

Copyright International Electrotechnical Commission
Provided by IHS under license with IEC
No reproduction or networking permitted without license from IHS
Not for Resale

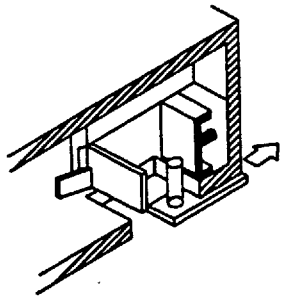

Figure 12 - Direction of force needed to unlock the reel lock

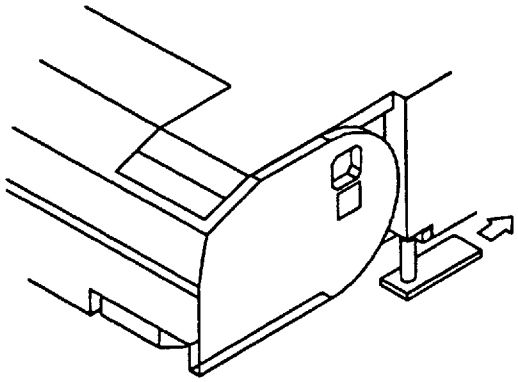

Figure 13 - Direction of force needed to unlock the lid lock

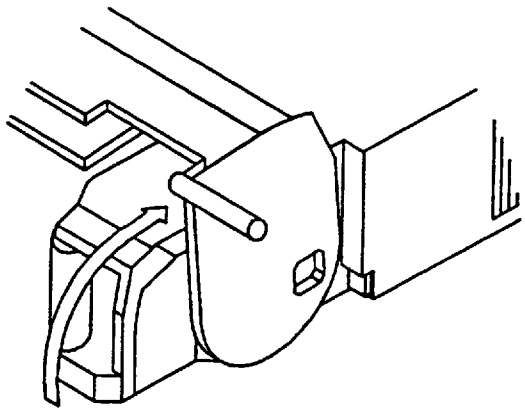

Figure 14 - Direction of force needed to open the lid

Copyright International Electrotechnical Commission
Provided by IHS under license with IEC
No reproduction or networking permitted without license from IHS
Not for Resale

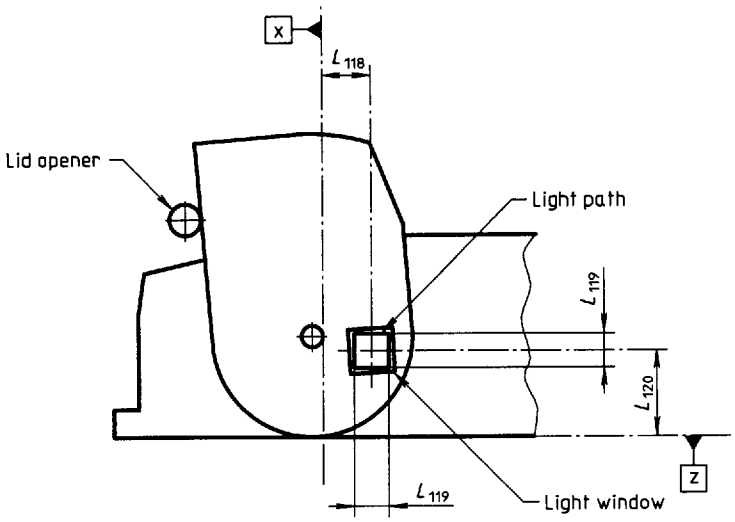

Figure 15 - Light path and light window

Copyright International Electrotechnical Commission
Provided by IHS under license with IEC
No reproduction or networking permitted without license from IHS
Not for Resale

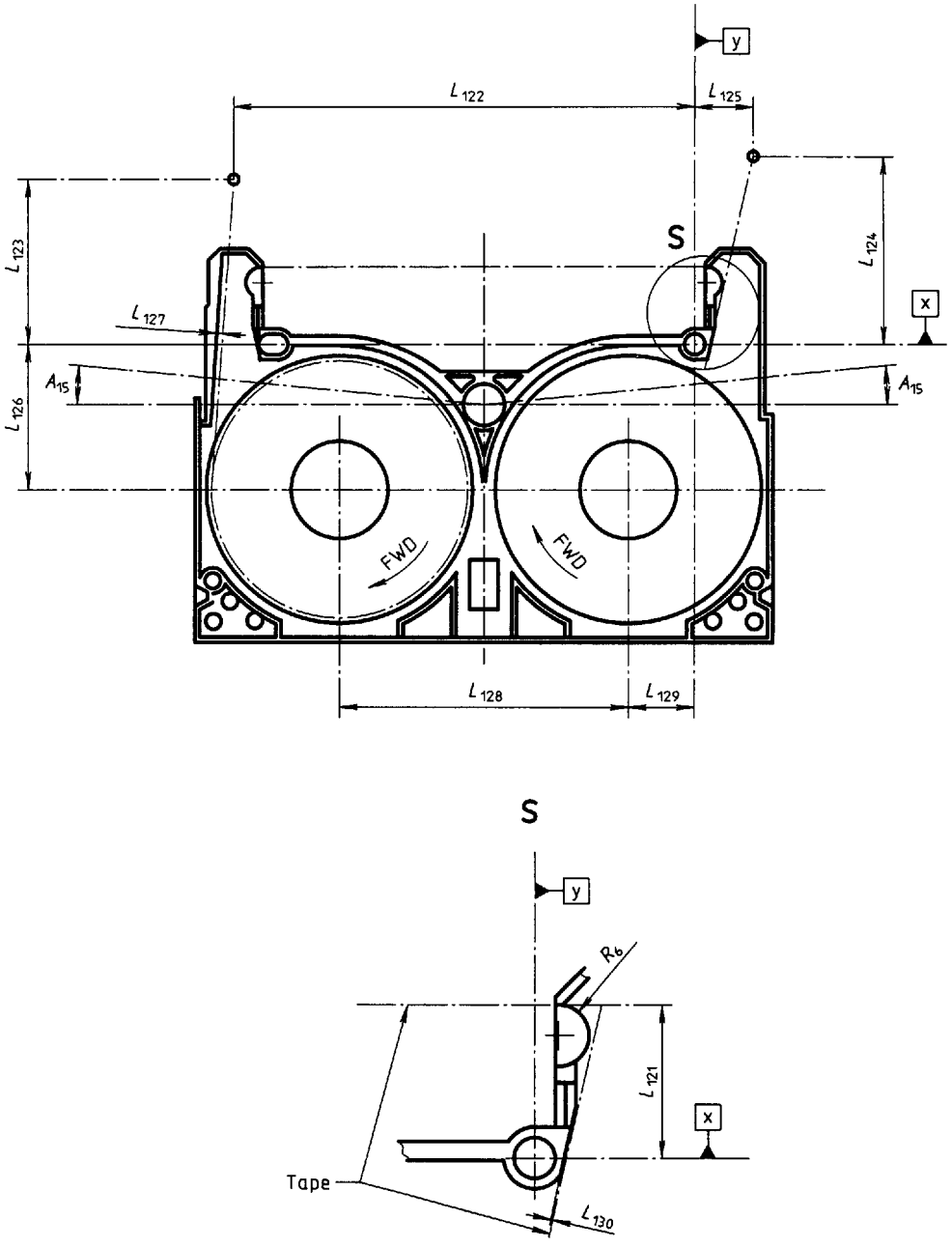

Figure 16 - Internal tape path and light path

Copyright International Electrotechnical Commission
Provided by IHS under license with IEC
No reproduction or networking permitted without license from IHS
Not for Resale

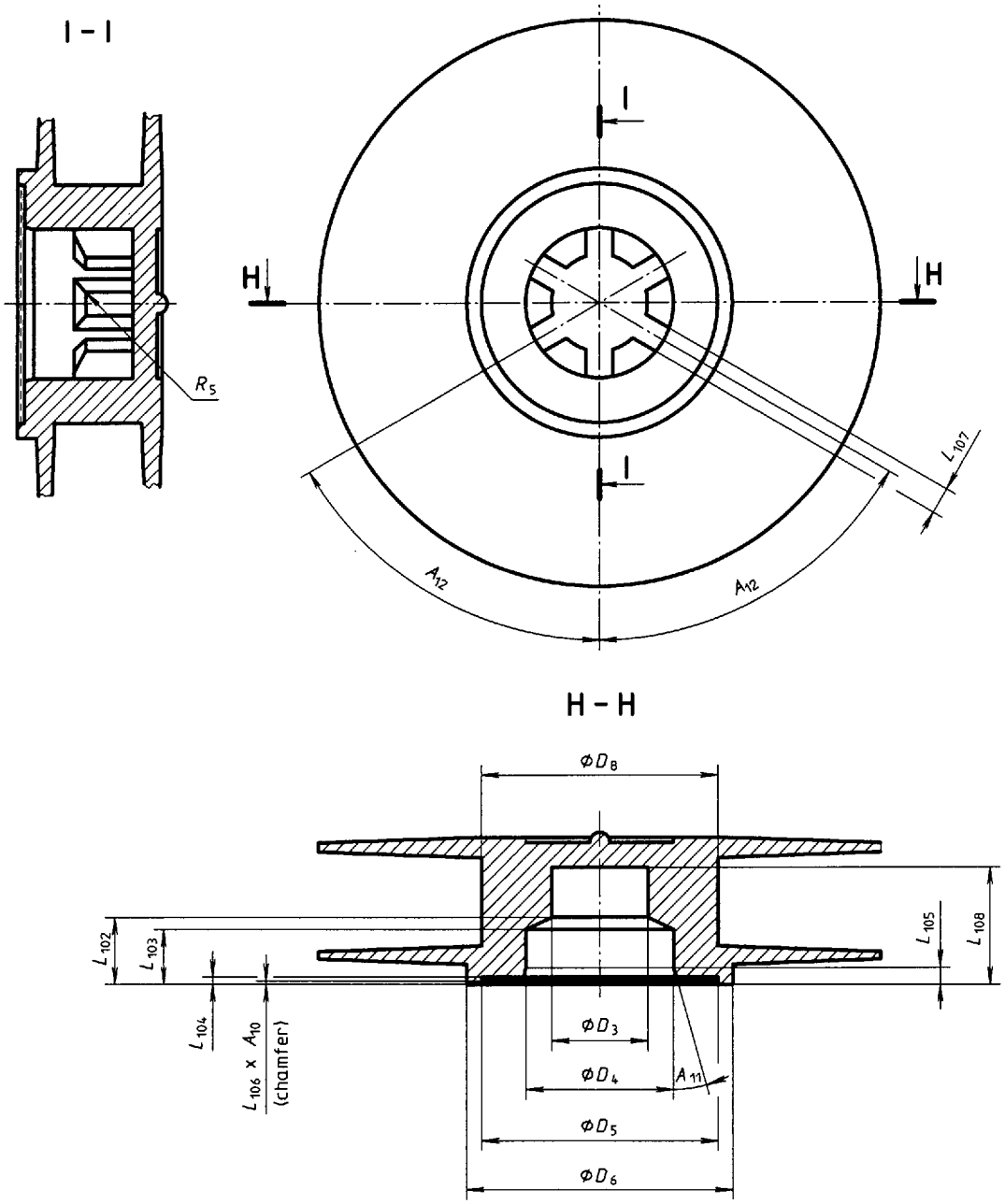

Figure 17 - Cartridge reel

Copyright International Electrotechnical Commission
Provided by IHS under license with IEC
No reproduction or networking permitted without license from IHS
Not for Resale

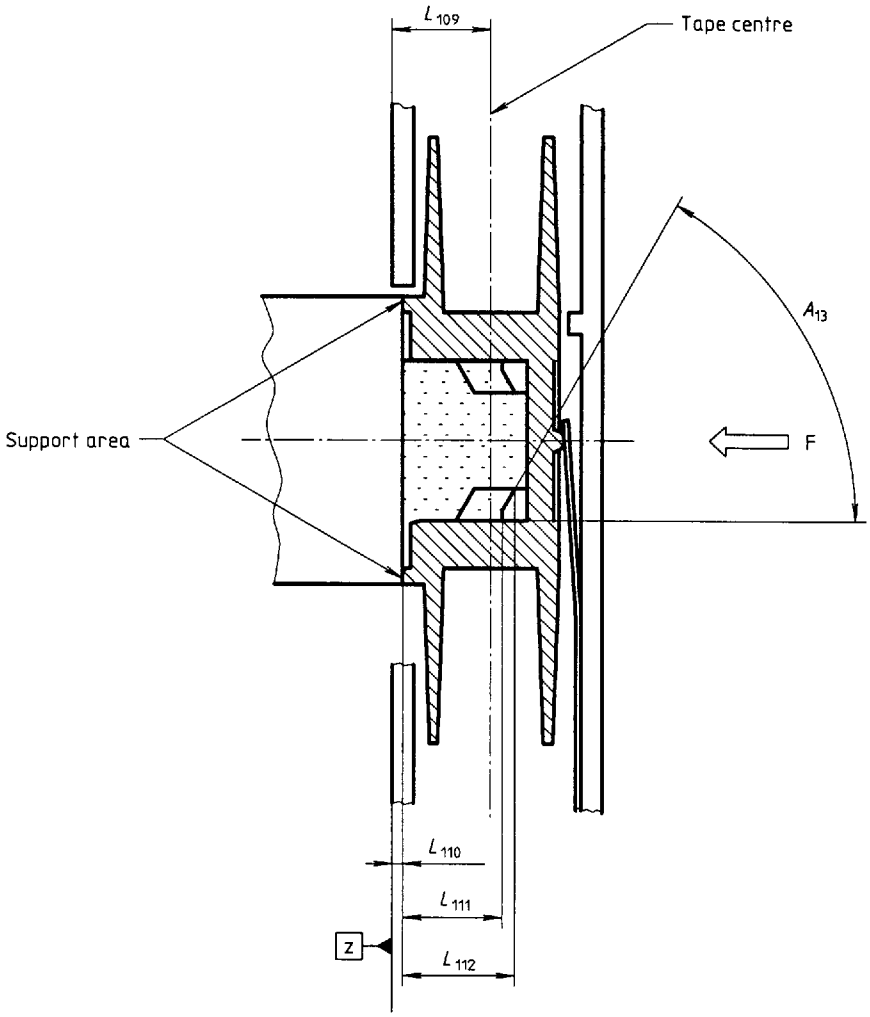

Figure 18 - Interface with drive spindle

Copyright International Electrotechnical Commission
Provided by IHS under license with IEC
No reproduction or networking permitted without license from IHS
Not for Resale

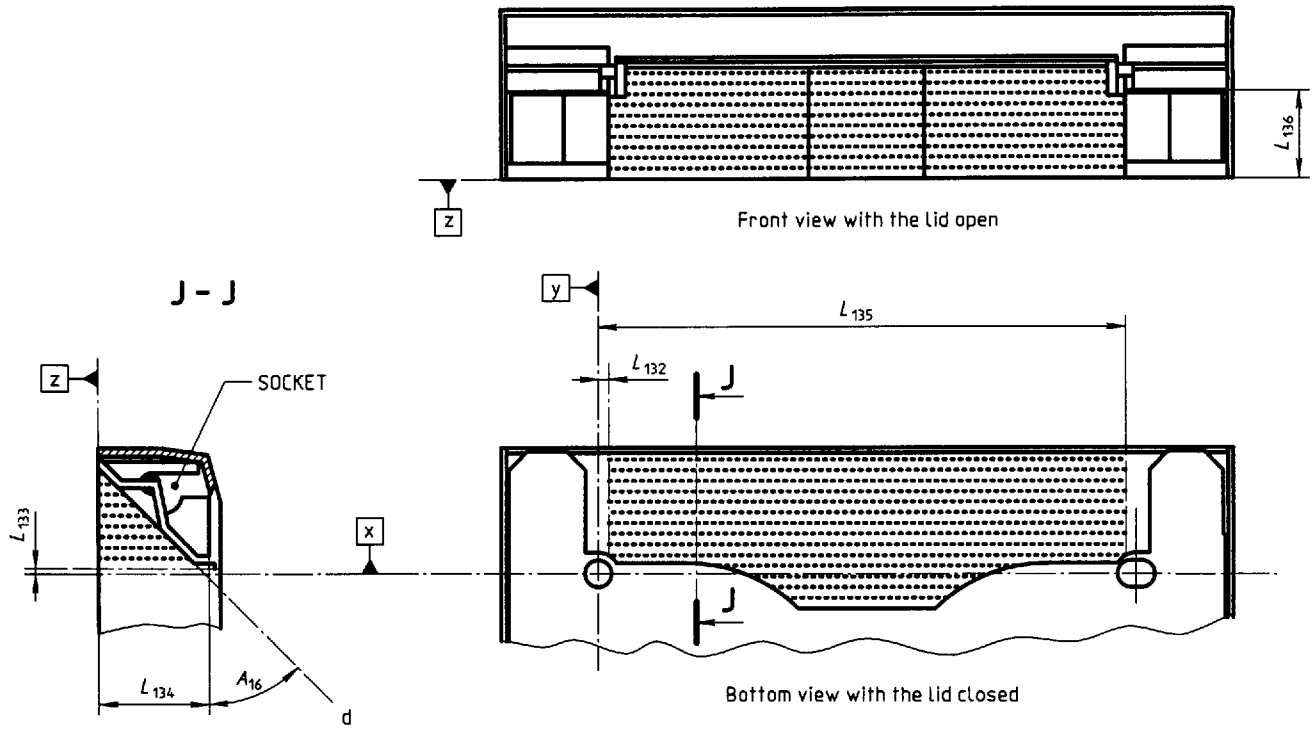

Figure 19 - Tape access cavity clearance

Copyright International Electrotechnical Commission
Provided by IHS under license with IEC
No reproduction or networking permitted without license from IHS
Not for Resale

Section 3 : Requirements for the unrecorded tape

7 Mechanical, physical and dimensional characteristics of the tape

7.1 Materials

The recordable area of the tape shall consist of a base material (oriented polyethylene terephthalate film or its equivalent) coated on one side with a strong yet flexible layer of ferromagnetic material. The back surface of the tape may be coated.

The leader and trailer tapes shall consist of a translucent length of the same or equivalent base material without the ferromagnetic coating or the back coating.

7.2 Tape length

7.2.1 Length of magnetic tape

The length of tape between PBOT and PEOT shall be 14,72 m minimum and 113 m maximum.

7.2.2 Length of leader and trailer tapes

The length of the leader and trailer tapes shall be 70 mm minimum and 90 mm maximum.

7.2.3 Splicing tape

The splicing tape shall have a maximum length of 13 mm.

7.3 Width

The width of the magnetic tape shall be 8,00 mm ± 0,01 mm. The difference between the largest and smallest width shall be no more than 6 µm peak-to-peak.

The width of the leader tape, trailer tape and splice shall be 8,00 mm ± 0,02 mm.

The width shall be measured across the tape from edge to edge.

Procedure : Cover a section of the tape with a glass microscope slide. Measure the width with no tension applied to the tape using a calibrated microscope, profile projector, or equivalent having an accuracy of at least 2,5 µm. Repeat the procedure to obtain tape widths at five or more different positions along a minimum tape length of 1 m. The tape width is the average of the widths measured.

7.4 Discontinuities

There shall be no discontinuities in the tape between PBOT and PEOT, such as those produced by tape splicings or perforations.

7.5 Thickness

7.5.1 Thickness of magnetic tape

This International Standard provides for two types of tape differing in thickness. The total thickness of a tape at any point shall be between 12,0 µm and 14,0 µm, or between 9,2 µm and 10,8 µm.

7.5.2 Thickness of leader and trailer tape

The thickness of the leader and trailer tape shall be between 13 µm and 17 µm.

7.6 Longitudinal curvature

The radius of curvature of the edge of the tape shall not be less than 33 m.

Procedure : Allow a 1 m length of tape to unroll and assume its natural curvature on a flat smooth surface. Measure the deviation from a 1 m chord.

The deviation shall not be greater than 3,8 mm.

Copyright International Electrotechnical Commission
Provided by IHS under license with IEC
No reproduction or networking permitted without license from IHS Not for Resale

This deviation corresponds to the minimum radius of curvature of 33 m if measured over an arc of a circle.

7.7 Cupping

The departure across the width of tape from a flat surface shall not exceed 0,9 mm.

Procedure : Cut a 1,0 m ± 0,1 m length of tape. Condition it for a minimum of 3 h in the test environment by hanging it so that the coated surface is freely exposed to the test environment. From the centre portion of the conditioned tape cut a test piece of length approximately 25 mm. Stand the test piece on its end in a cylinder which is at least 25 mm high with an minimum inside diameter of 8 mm. With the cylinder standing on an optical comparator measure the cupping by aligning the edges of the test piece to the reticle and determining the distance from the aligned edges to the corresponding surface of the test piece at its centre.

7.8 Coating adhesion (figure 20)

The force required to peel any part of the coating from the tape base material shall not be less than 0,96 N.

Procedure : Take a test piece of the tape approximately 380 mm long and scribe a line through the coating across the width of the tape 125 mm from one end. Using a double-sided pressure sensitive tape, attach the test piece to a smooth metal plate, with the coated surface facing the plate. Fold the test piece over 180° adjacent to, and parallel with the scribed line. Attach the metal plate and the free end of the test piece to the jaws of a tensometer such that when the jaws are separated the tape is peeled. Set the jaw separation rate to 254 mm/min. Note the force at which any part of the coating first separates from the base material. If this is less than 0,10 N, the test has failed. If the test piece peels away from the double-sided pressure sensitive tape before the force exceeds 0,10 N, an alternative type of double-sided pressure tape shall be used.If the back surface of the tape is coated, repeat the above procedure for the back coating.

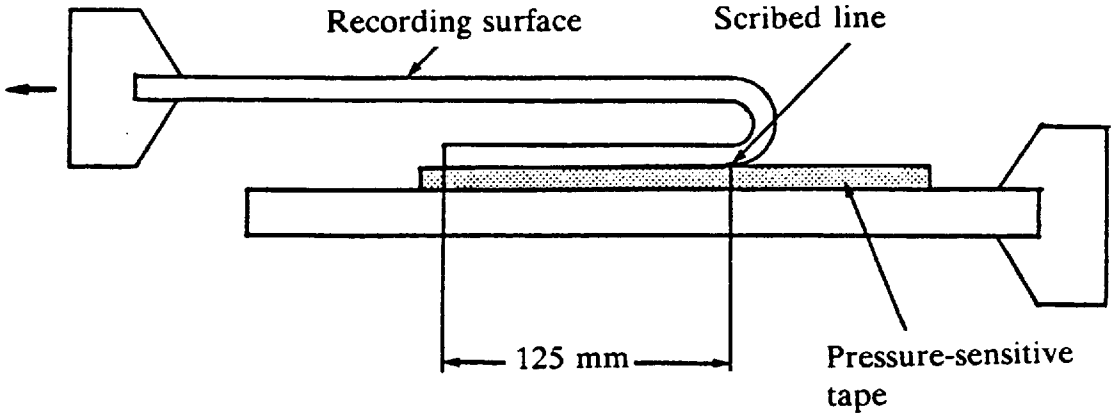

Figure 20 - Setup for measuring coating adhesion

7.9 Layer-to-layer adhesion

There shall be no tendency for the test piece to stick or for the coating to peel.

Copyright International Electrotechnical Commission
Provided by IHS under license with IEC
No reproduction or networking permitted without license from IHS
Not for Resale

Procedure : Attach one end of a test piece of magnetic tape of 1 m in length to the surface of a glass tube of external diameter 36 mm. Wind the tape on to the tube at a tension of 1,1 N. Store the wound test piece in a temperature of 45 °C ± 3 °C and a relative humidity of 80% for 4 h. Store for a further 24 h in the testing environment. Apply a force of 0,1 N to the free end of the test piece and allow it to unwind slowly.

7.10 Tensile strength

The measurements shall be made in accordance with ISO/R 527.

The length of the test piece shall be 200 mm. The rate of elongation for all tensile tests shall be 100 mm/min (ISO/R 527, rate D).

7.10.1 Breaking strength

Load the test piece until the breaking point of the test piece is reached. The force required to reach that point is the breaking strength of the tape.

The breaking strength shall not be less than 17,6 N.

7.10.2 Yield strength

The yield strength is the force necessary to produce a 5% elongation of the tape.

The yield strength shall be greater than 4,9 N.

7.11 Residual elongation

The residual elongation, stated in per cent of the original tape length, shall be less than 0,03 %.

Procedure : Measure the initial length of a test piece of approximately 1 m with a maximum applied force of 0,20 N. Apply an additional force per total cross-sectional area of 20,5 N/mm^2 for a period of 10 min. Remove the additional force and measure the length after 10 min.

7.12 Electrical resistance of the surface

The electrical resistance of any square area of the recording surface shall be within the ranges:

10^5 Ω to 5 x 10^8 Ω for non-back coated tape

10^5 Ω to 5 x 10^{12} Ω for back-coated tape

The electrical resistance of any square area of the back-coating, if present, shall be less than 9 x 10^8 Ω.

Procedure : Condition a test piece of tape in the test environment for 24 h. Position the test piece over two 24-carat gold-plated, semicircular electrodes having a radius r = 10 mm and a finish of at least N4, so that the recording surface is in contact with each electrode. The electrodes shall be placed parallel to the ground and parallel to each other at a distance d = 8 mm between their centres. Apply the force necessary to produce a tension of 5 N/mm^2 to each end of the test piece. Apply a d.c. voltage of 100 V ± 10 V across the electrodes and measure the resulting current flow. From this value, determine the electrical resistance. Repeat for a total of five positions along the test piece and average the five resistance readings. For back-coated tape repeat the procedure with the back-coating in contact with the electrodes. When mounting the test piece ensure that no conducting paths exist between the electrodes except that through the coating under test.

NOTE 4 Particular attention should be given to keeping the surfaces clean.

Copyright International Electrotechnical Commission
Provided by IHS under license with IEC
No reproduction or networking permitted without license from IHS Not for Resale

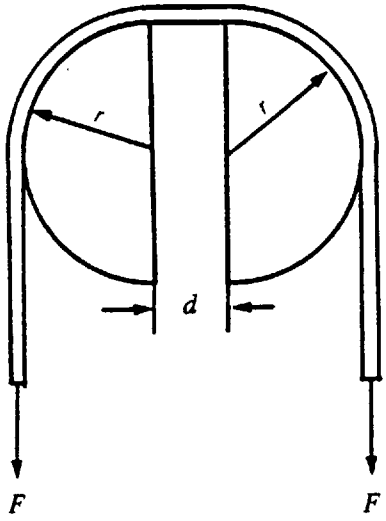

Figure 21 - Setup for measuring electrical resistance

7.13 Tape winding

The magnetic recording surface of the tape shall face outward from the cartridge and reels.

7.14 Light transmittance of tape

The light transmittance of the magnetic tape shall be less than or equal to 5 %.

The light transmittance of the leader and trailer tapes shall not be less than 60 %.

The method for measuring light transmittance is given in annex A.

8 Magnetic recording performance

The magnetic recording performance is defined by the testing requirements given in the following subclauses. When performing these tests, the head output or the resultant amplified signal shall be measured on the same relative pass for both a tape calibrated to the Secondary Reference Tape and the tape under test (read-while-write, or on equipment without read-while-write capability, on the first-forward-read-pass) on the same equipment.

8.1 Test conditions

The following conditions shall apply to all magnetic recording testing requirements, unless otherwise noted:

Tape condition:	AC erased to 2 % or less of the Average Signal Amplitude recorded at 2 126 ftpmm
Tape/head speed:	3,759 m/s ± 0,20 %
Track width:	25 µm ± 1 µm
Azimuth:	-10,000° ± 0,133°
Gap Length:	0,30 µm ± 0,05 µm

Copyright International Electrotechnical Commission
Provided by IHS under license with IEC
No reproduction or networking permitted without license from IHS
Not for Resale

Tape Tension:	0,117 0 N ± 0,009 8 N
Recording Current:	Test Recording Current

8.2 Typical Field

The Typical Field of the tape shall be between 80% and 120% of the Secondary Reference Field.

8.3 Signal Amplitude

The Average Signal Amplitude, exclusive of missing pulses, at the recording density of 2 126 ftpmm shall be between 70% and 130% of the Standard Reference Amplitude.

8.4 Resolution

The resolution of the tape shall be between 80% and 120% of that for the Secondary Standard Reference Tape when measured at the recording densities of 708,67 ftpmm and 2 126 ftpmm.

8.5 Narrow-band signal-to-noise ratio

The narrow-band signal-to-noise ratio (NB-SNR) is the average read signal power divided by the average integrated (side-band) rms noise power, and is expressed in decibels.

8.5.1 Requirement

The NB-SNR shall not be less than 34 dB when normalized to a track width of 25 μm. The normalization factor is $dB(25) = dB(W) + 10 \lg 25/W$, where W is the track width used when measuring $dB(W)$.

8.5.2 Procedure

The NB-SNR shall be measured using a spectrum analyzer. The spectrum analyzer resolution bandwidth (RBW) shall be 3 kHz and the video bandwidth (VBW) shall be 30 Hz.

Measure the read signal amplitude of the 2 126 ftpmm signal using a spectrum analyzer, taking a minimum of 150 samples over a minimum length of tape of 6 m. On the next pass (read only), measure the rms noise power over the same section of tape and integrate the rms noise power (normalizing for the actual resolution bandwidth) over the range from 3,59 MHz to 3,96 MHz.

8.6 Ease of erasure

When a tape has been recorded at 98 ftpmm with a recording current equal to the Test Recording Current for 2 126 ftpmm and passed through a longitudinal steady erasing field of 320 000 A/m any remaining signal shall not exceed 2% of the Standard Reference Amplitude. The erasure field shall be reasonably uniform, for example, the field in the middle of a solenoid. This measurement shall be made with a band pass filter passing, at least, the first three harmonics.

8.7 Tape quality

8.7.1 Missing pulses

A missing pulse is a loss of read signal amplitude. A missing pulse exists when the base-to-peak read signal is 25%, or less, of half the Average Signal Amplitude for the recording density of 2 126 ftpmm on the same tape.

8.7.2 Missing pulse zone

A missing pulse zone commences with seven consecutive missing pulses and ends when 28 consecutive flux transitions are read or when a length of 0,038 mm of track has been measured. Any further missing pulse results in a further missing pulse zone.

A missing pulse zone does not continue from one track to another.

The average missing pulse zone rate is the total number of missing pulse zones divided by the total number of flux transitions recorded on the tape.

Copyright International Electrotechnical Commission
Provided by IHS under license with IEC
No reproduction or networking permitted without license from IHS
Not for Resale

At a density of 2 126 ftpmm, the rate of the average missing pulse zone shall be less than 2×10^{-7}.

8.8 Inhibitor tape

This International Standard does not specify parameters for assessing whether or not a tape is an inhibitor tape. However, annex E gives further information on inhibitor tapes.

Section 4 : Requirements for an interchanged tape

9 Format

9.1 General

Data to be recorded is sent from a host computer to the tape system. The tape system combines this data with additional data into groups before recording onto the tape.

In the following description all operations on the data received from the host computer, including the use of error detecting and correcting codes, are described. Then the method of recording on the tape and the tape layout itself is described. However, because of the inherent characteristics of this format, where required, advance reference to the tape layout will also be made in the course of the description of the operations on the data.

9.2 Information matrix

The data received from the host shall be allocated to a two dimensional group called an Information Matrix.

The Information Matrix shall be a 60-column by 24-row array containing 1 440 cells. Each cell is identified by its column and row numbers and contains a data byte.

When complete an Information Matrix shall contain

ID Information	14 bytes	see clause 14.
User Data bytes		
Pad bytes	1 024 bytes	see 9.2.1.1
CRC bytes	2 bytes	see 9.2.1.2
Horizontal EC bytes	160 bytes	see 9.2.1.3.1
Vertical EC bytes	240 bytes	see 9.2.1.3.2
	1 440 bytes	

Copyright International Electrotechnical Commission
Provided by IHS under license with IEC
No reproduction or networking permitted without license from IHS
Not for Resale

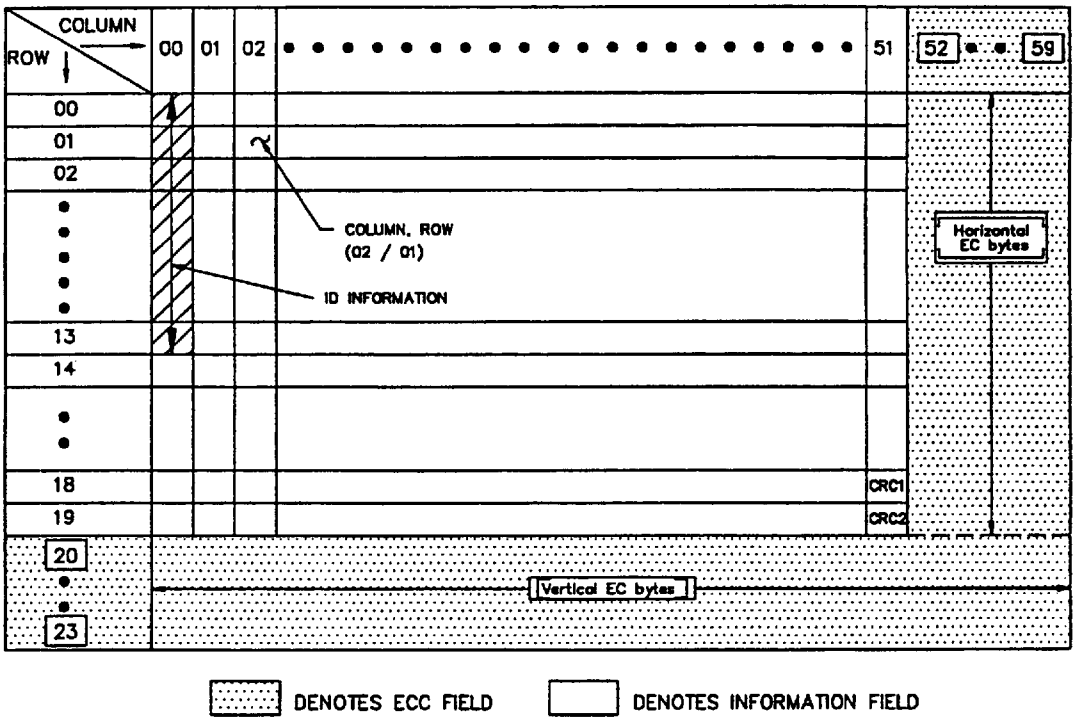

Figure 22 - Information matrix

9.2.1 Loading of the information matrix

Cells are identified by column and row in the following form: 00/00 to 59/23. All additions in the calculations of the CRC bytes and EC bytes are Exclusive OR operations.

9.2.1.1 Group 1 (G1)

A G1 Group shall consist of 1 038 bytes, viz 14 bytes of ID Information and other 1 024 bytes. When the number of available User Data bytes is less than 1 024, the remaining bytes are Pad bytes. These bytes are undefined and shall be ignored for interchange. Some G1 Groups contain no User Data bytes (see 12.3).

ID Information shall be entered into cells 00/00 to 00/13. The content of these bytes are specified in clause 14.

User Data bytes from the host shall be entered sequentially by column starting with 00/14 to 00/19, continuing with 02/00 to 02/19 through the even columns until 50/19, then returning to 01/00 to 01/19 and continuing through the odd columns until 51/17.

9.2.1.2 Group 2 (G2)

A G2 Group shall consist of a G1 Group with the addition of two CRC bytes.

The two CRC bytes shall be computed over the 1 038 bytes of the G1 Group and entered into cells 51/18 and 51/19.

They are generated as follows:

D_k is the byte in column c and row r

Copyright International Electrotechnical Commission
Provided by IHS under license with IEC
No reproduction or networking permitted without license from IHS
Not for Resale

where:

k = 0 to 1037

k = (10c + r), if c is even

k = (10c + r + 510), if c is odd

c = 0 to 51

r = 0 to 19

$D_{k,0}$, $D_{k,1}$,..., $D_{k,7}$ denote the 8 bits of D_k, where $D_{k,7}$ is the high order bit.

$$D_k(X) = \sum_{j=0}^{j=7} D_{kj}\, x^j$$

$$D(X) = \sum_{k=0}^{k=1\,037} D_k(X)\, x^{8(1\,039-k)}$$

$$G_{CRC}(X) = x^{16} + x^{12} + x^5 + 1$$

$$C(X) = D(X) \bmod G_{CRC}(X)$$

$$C(x) + x^{14} + x^{12} + x^{10} + x^8 + x^7 + x^5 + x^3 + x = \sum_{k=0}^{k=7} (CH_k\, x^{k+8} + CL_k\, x^k)$$

where

CH_0, CH_1, ... , CH_7 are the bits of the first CRC byte (CRC1), CH_7 being the most significant bit;

CL_0, CL_1, ... , CL_7 are the bits of the second CRC byte (CRC2), CL_7 being the most significant bit.

9.2.1.3 ECC

For the Error-Correcting Code (ECC) the (30, 26, 5) Reed-Solomon code is used for the horizontal code, and the (24, 20, 5) Reed-Solomon code is used for the vertical code. This yields two types of check bytes:

- Horizontal EC bytes
- Vertical EC bytes

T[A] denotes a linear transformation on the 8-bit byte A.

T^{-1} [B] denotes the inverse transformation and defines the transformation in the following way:

B = T[A] and A = T^{-1} [B]

A_0, A_1, ... , A_7 are the 8 bits of A (A_7 being the most significant bit) and B_0, B_1, ... , B_7 the 8 bits of B (B_7 being the most significant bit.)

These transformations are defined by the following:

Copyright International Electrotechnical Commission
Provided by IHS under license with IEC
No reproduction or networking permitted without license from IHS
Not for Resale

$B_0 = A_0 + A_2 + A_3 + A_5 + A_7$
$B_1 = A_3 + A_4 + A_6 + A_7$
$B_2 = A_0 + A_6 + A_7$
$B_3 = A_0 + A_1 + A_6$
$B_4 = A_1$
$B_5 = A_0$
$B_6 = A_1 + A_2 + A_3 + A_7$
$B_7 = A_0 + A_1 + A_2 + A_6$

$A_0 = B_5$
$A_1 = B_4$
$A_2 = B_3 + B_7$
$A_3 = B_2 + B_6 + B_7$
$A_4 = B_1 + B_5 + B_6 + B_7$
$A_5 = B_0 + B_4 + B_5 + B_6$
$A_6 = B_3 + B_4 + B_5$
$A_7 = B_2 + B_3 + B_4$

The field generator for $GF(2^8)$ is

$$G_\alpha(X) = x^8 + x^4 + x^3 + x^2 + 1$$

B is an element of $GF(2^8)$ such that :

$$B = \sum_{k=0}^{k=7} B_k \alpha^k$$

where B_0, B_1, ... , B_7 are the bits of B, B_7 being the most significant bit.

$$G(X) = \prod_{i=-1}^{i=2} (X + \alpha^i)$$

9.2.1.3.1 Group 3 (G3)

A G3 Group shall consist of a G2 Group with the addition of the Horizontal EC bytes.

$D_{c,r}$ denotes the bytes in the G2 Group, where c is the column number (0 to 51) and r is the row number (0 to 19).

$DHE_r(X)$ denotes the polynomial the coefficients of which are the transforms of the bytes in the even columns of row r. $T[CRE_{k,r}]$ denotes the transforms of the Horizontal EC bytes in the even columns of row r. $CRE_{k,r}$ denotes the Horizontal EC bytes in the even columns of row r.

$$DHE_r(X) = \sum_{k=0}^{k=25} T\left[D_{2k,r}\right] X^{29-k}$$

$r = 0,1,..., 19$

$$DHE_r(X) \bmod G(X) = \sum_{k=1}^{k=4} T\left[CRE_{k,r}\right] X^{4-k}$$

$$CRE_{k,r} = T^{-1}\left[T\left[CRE_{k,r}\right]\right]$$

$k = 1,2,3,4$

$CRE_{k,r}$ shall be the contents of the cell in column c and row r where $c = 50 + 2k$.

Similarly, $DHO_r(X)$ denotes the polynomial the coefficients of which are the transforms of the bytes in the odd columns of row r. $T[CRO_{k,r}]$ denotes the transforms of the Horizontal EC bytes in the odd columns of row r. $CRO_{k,r}$ denotes the Horizontal EC bytes in the odd columns of row r.

Copyright International Electrotechnical Commission
Provided by IHS under license with IEC
No reproduction or networking permitted without license from IHS
Not for Resale

$$DHO_r(X) = \sum_{k=0}^{k=25} T\left[D_{(2k+1),r}\right] X^{29-k}$$

$r = 0,1,..., 19$

$$DHO_r(X) \bmod G(X) = \sum_{k=1}^{k=4} T\left[CRO_{k,r}\right] X^{4-k}$$

$$CRO_{k,r} = T^{-1}\left[T\left[CRO_{k,r}\right]\right]$$

$k = 1,2,3,4$

$CRO_{k,r}$ shall be the contents of the cell in column c and row r where $c = 51 + 2k$.

9.2.1.3.2 Group 4 (G4)

A G4 Group shall consist of a G3 Group with the addition of the Vertical EC bytes.

$D_{c,r}$ denotes each byte in the G3 group consisting of all columns in rows 0 to 19, where c is the column number (0 to 59) and r is the row number (0 to 19).

$DV_c(X)$ denotes the polynomial whose coefficients are the transforms of the bytes in column c. $T[CC_{c,k}]$ denotes the transforms of the Vertical EC bytes in column c. $CC_{c,k}$ denotes the Vertical EC bytes in column c.

$$DV_c(X) = \sum_{k=0}^{k=19} T\left[D_{c,k}\right] X^{23-k}$$

$c = 0,1,..., 59$

$$DV_c(X) \bmod G(X) = \sum_{k=0}^{k=4} T\left[CC_{c,k}\right] X^{4-k}$$

$$CC_{c,k} = T^{-1}\left[T\left[CC_{c,k}\right]\right]$$

$k = 1,2,3,4$

$CC_{c,k}$ shall be the contents of the cell in column c and row r where $r = 19 + k$.

10 Method of recording

The method of recording shall be NRZ1 (non-return to ZERO, change on ONEs).

- A ONE is represented by a flux transition at the centre of a bit cell.
- A ZERO is represented by the absence of flux transitions from the bit cell.

10.1 Physical recording density

The maximum physical recording density shall be 2 126 ftpmm and occurs for a pattern of all ONEs.

The resulting nominal bit cell length is 0,470 µm.

10.1.1 Long-term average bit cell length

The long-term average bit cell length for each track shall be measured over a minimum of 133 060 consecutive bit cells. It shall be within 0,20% of the nominal bit cell length.

Copyright International Electrotechnical Commission
Provided by IHS under license with IEC
No reproduction or networking permitted without license from IHS
Not for Resale

10.1.2 Short-term average bit cell length

The short-term average bit cell length (STA) shall be the average taken over any 16 bit cells. The short-term average bit cell length shall be within 0,35% of the long-term average bit cell length for the preceding track.

10.1.3 Rate of change

The rate of change of the short-term average flux transition cell length, taken over any two consecutive 16-bit cell lengths, shall not exceed 0,05%.

$$\left| \frac{\text{STA}_n}{\text{16 Channel bits}} \right| \left| \frac{\text{STA}_{n+1}}{\text{16 Channel bits}} \right|$$

Rate of Change :

$$\frac{\left| \text{STA}_n - \text{STA}_{n+1} \right|}{\text{STA}_n} \times 100\%$$

10.2 Bit shift

The maximum displacement of any ONEs zero crossing, exclusive of missing pulses, shall not deviate by more than 25% from the expected position as defined by the average bit cell length.

See annex B for the method of measurement.

10.3 Read signal amplitudes

10.3.1 Amplitude of data signals

The signal amplitude averaged over a minimum of 3 000 flux transitions at 2 126 ftpmm shall be between 70% and 130% of the Secondary Reference Amplitude.

10.3.2 Amplitude of servo signals

The servo signal amplitude averaged over any Servo Frame (see 12.5) shall be between 70% and 130% of a 98 ftpmm signal recorded on the Secondary Standard Reference Tape with the Test Recording Current.

10.3.3 Signal amplitude on an analogue tape mark track

The signal amplitude on any Analogue Tape Mark Track (see 13.1) averaged over any recorded track length shall be between 70% and 130% of a 98 ftpmm signal recorded on the Secondary Standard Reference Tape with the Test Recording Current.

10.4 Erasure

In all erased areas the full width of the tape shall be AC erased in the direction of tape motion. After erasure, the read signal amplitude shall be no greater than 2% of the Average Signal Amplitude recorded at the physical recording density of 2 126 ftpmm on the same tape.

Copyright International Electrotechnical Commission
Provided by IHS under license with IEC
No reproduction or networking permitted without license from IHS
Not for Resale

11 Track geometry

11.1 Track positions

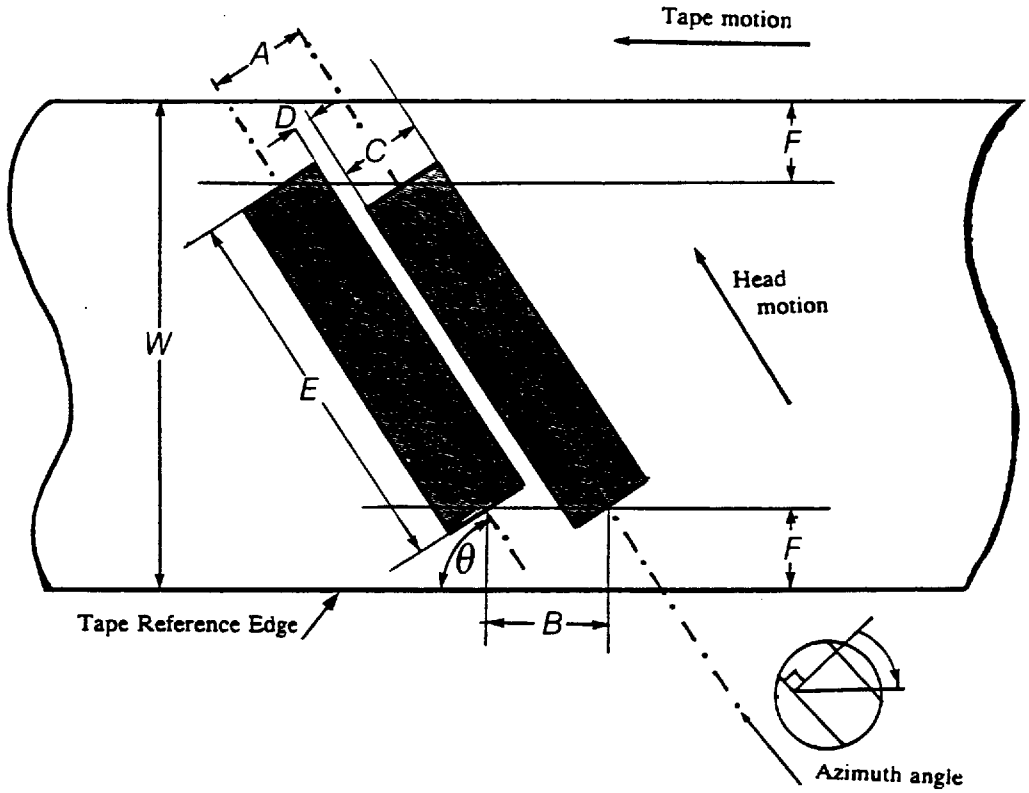

Figure 23 - Track layout and track location

A :	Adjacent Track Pitch
B :	Longitudinal Track Pitch
C :	Track Width
D :	Track Guard Band
E :	Track Length
F :	Guard Band
W :	Tape Width
θ :	Track Angle

Each recorded track shall have a length E = 71,673 mm ± 0,144 mm.

There shall be a Guard Band of width F = 1,014 mm ± 0,018 mm extending from the Tape Reference Edge to the start of the recorded tracks.

There shall be an erased Track Guard Band between adjacent tracks. The width D of this Track Guard Band shall be 6,0 µm ± 2,5 µm.

Copyright International Electrotechnical Commission
Provided by IHS under license with IEC
No reproduction or networking permitted without license from IHS
Not for Resale

11.2 Track pitch

11.2.1 Average track pitch

The distance, averaged over any group of 30 consecutive tracks, between the centreline of any track and the centreline of an adjacent track, measured perpendicular to the track length, shall be between 0,030 8 mm and 0,031 2 mm.

NOTE 5 The corresponding average longitudinal distance B measured parallel to the Reference Edge of the tape is 0,363 mm nominal.

11.2.2 Adjacent track pitch

The distance A between the centrelines of any two adjacent tracks, measured perpendicular to the track length, shall be between 0,029 5 mm and 0,032 5 mm.

11.3 Track width

The width C of a written track shall be 25 µm ± 1 µm.

11.4 Track angle

The angle θ of the centreline of each track in degrees of arc relative to the reference edge shall be 4,899 1° ± 0,001 5°.

11.5 Linearity of track edges

The edges of a recorded track shall each be contained within two parallel straight lines 5 µm apart.

11.6 Azimuth

The azimuth shall be -10,000° ± 0,133°

12 Format of an information track

12.1 Channel bit

A Channel bit occupies a bit cell.

The Bit Synchronization field, Servo Zone, Preamble, Postamble, and Analogue Tape Mark Track are specified in Channel bits.

Each Information Segment Number is represented by a pattern of 10 Channel bits (see 12.2.2).

Each 8-bit byte in the Information Segment field is represented by a pattern of 10 Channel bits as defined in annex C.

12.2 Information Segment

An Information Segment shall be structured as shown in figure 24.

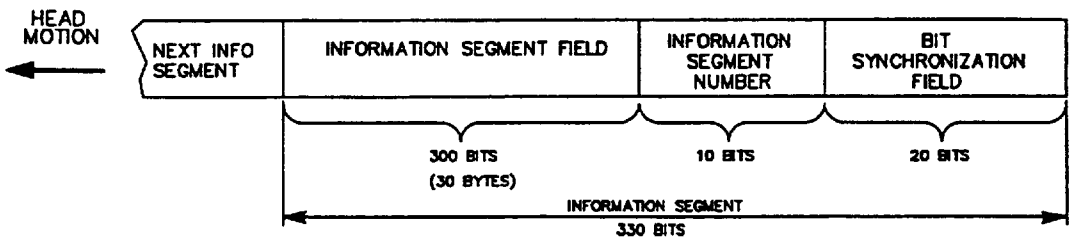

Figure 24 - Information Segment layout

Copyright International Electrotechnical Commission
Provided by IHS under license with IEC
No reproduction or networking permitted without license from IHS
Not for Resale

12.2.1 Bit Synchronization field

The Bit Synchronization field shall be a 20-bit pattern comprising a leading ZERO, eighteen ONEs, and a trailing ZERO.

12.2.2 Information Segment Number

An Information Segment Number in the range of 00 to 47 shall be represented by a 10-bit pattern as defined in table 1. The highest bit position of the Information Segment Number shall be recorded first.

Table 1 - Information Segment Number

INFORMATION SEGMENT NUMBER	RECORDED PATTERN	INFORMATION SEGMENT NUMBER	RECORDED PATTERN
00	1111111011	24	1101111111
01	1111111101	25	1101111101
02	1111110111	26	1101110111
03	1111110101	27	1101110101
04	1110111011	28	1011011111
05	1110111101	29	1011011101
06	1110110111	30	1011010111
07	1110110101	31	1011010101
08	1101011011	32	1110111111
09	1101011101	33	1111101111
10	1101010111	34	1111101101
11	1101010101	35	1111101011
12	1011111011	36	1101011111
13	1011111101	37	1110101111
14	1011110111	38	1110101101
15	1011110101	39	1110101011
16	1010111011	40	1010111111
17	1010111101	41	1011101111
18	1010110111	42	1011101101
19	1010110101	43	1011101011
20	1111011111	44	1011111111
21	1111011101	45	1010101111
22	1111010111	46	1010101011
23	1111010101	47	1101101011
	10 1		10 1
	BIT POSITION		

12.2.3 Information Segment field

The Information Segment field shall consist of 300 Channel bits representing 30 data bytes unloaded from the Information Matrix. Each row (R) of the Information Matrix shall be divided into two Information Segment fields, 00/R to 29/R and 30/R to 59/R. These shall be numbered as shown in figure 25. They shall be unloaded in this sequence.

Copyright International Electrotechnical Commission
Provided by IHS under license with IEC
No reproduction or networking permitted without license from IHS
Not for Resale

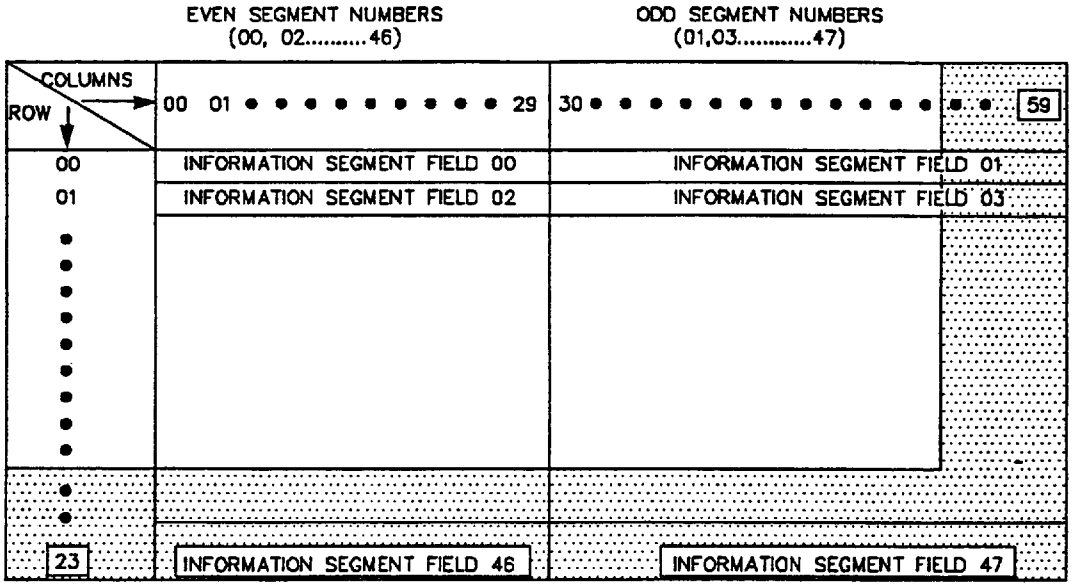

Figure 25 - Segment field partitioning of the Information Matrix

12.3 Information Block

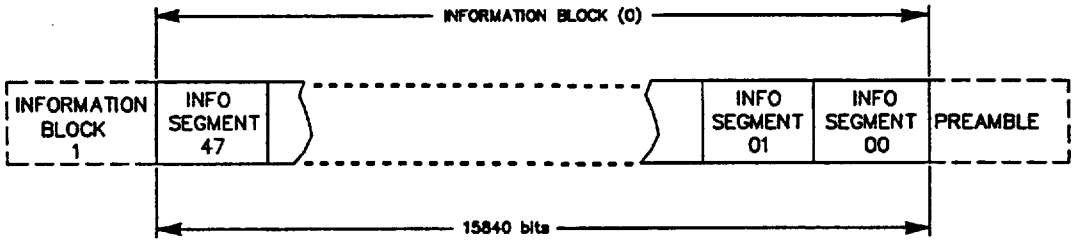

Figure 26 - Information Block layout

An Information Block shall consist of 48 Information Segments numbered sequentially from 00 to 47. Information Segment 00 shall be recorded first.

There are four types of Information block: Data Block, Pad Block, Format ID Block and Tape Mark Block. They are identified in the ID Information (see clause 14.).

The bytes in the G1 Group, exclusive of the ID Information, of the Pad Block, of the Format ID Block and of the Tape Mark Block, are undefined and shall not be used for interchange.

Copyright International Electrotechnical Commission
Provided by IHS under license with IEC
No reproduction or networking permitted without license from IHS
Not for Resale

12.4 Information Zone

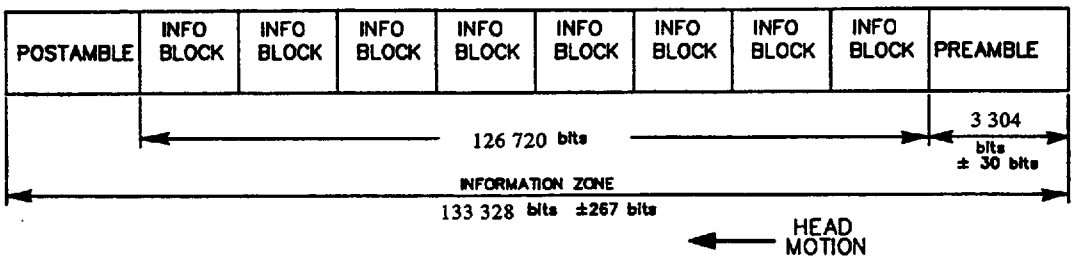

Figure 27 - Information area layout

An Information Zone shall consist of a Preamble, eight Information Blocks and a Postamble, and shall have a length of 133 328 Channel bits ± 267 Channel bits.

The Preamble shall consist of a sequence of 3 304 ± 30 ONE Channel bits.

The Postamble shall consist of a sequence of ONE Channel bits. The number shall be such that the total of 133 328 Channel bits ± 267 Channel bits in the Information Zone is maintained.

12.5 Servo Zone

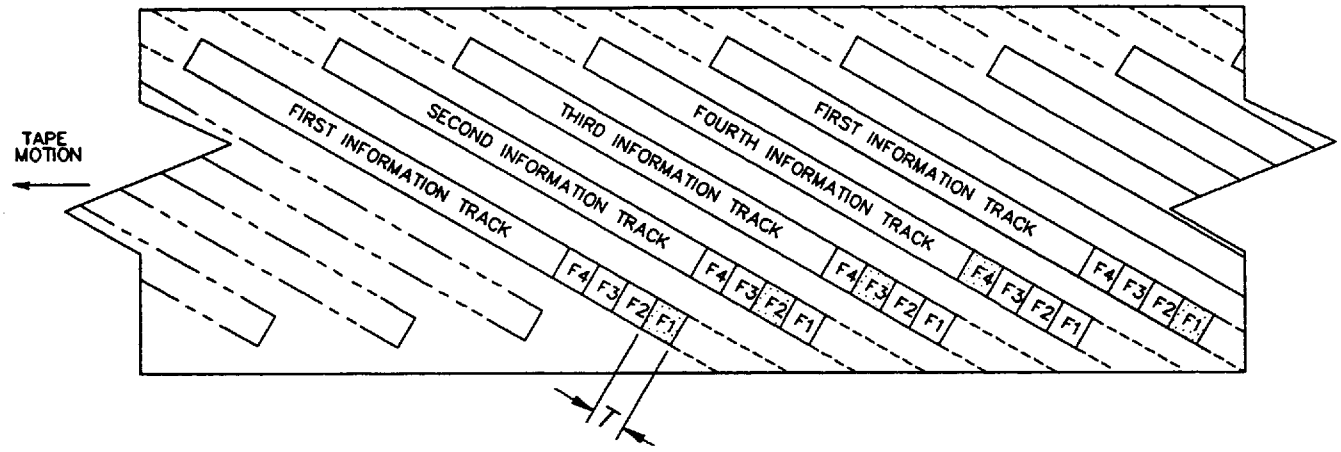

Figure 28 - Servo Zone layout

The Servo Zone is used for the proper positioning of the head relative to the recorded track. It shall consist of four Servo Frames F1 to F4, each of which has a nominal length T of 2,256 mm.

Within a Servo Zone only one of the four Servo Frames shall be recorded; it shall be filled with Tone. The Servo Frame to be recorded in the first track after an erased zone is not defined, but in successive tracks the position of the recorded Servo Frame shall be advanced by one frame in the direction of head motion. When Servo Frame F4 has been recorded in a track, Servo Frame F1 shall be recorded in the next track and the sequence repeated.

12.6 Information Tracks

All Information Tracks shall contain a Servo Zone followed by an Information Zone.

There are four types of Information Tracks.

Copyright International Electrotechnical Commission
Provided by IHS under license with IEC
No reproduction or networking permitted without license from IHS
Not for Resale

- the Format ID Tracks;
- the Data Tracks;
- the Tape Mark Tracks;
- the Splice Tracks.

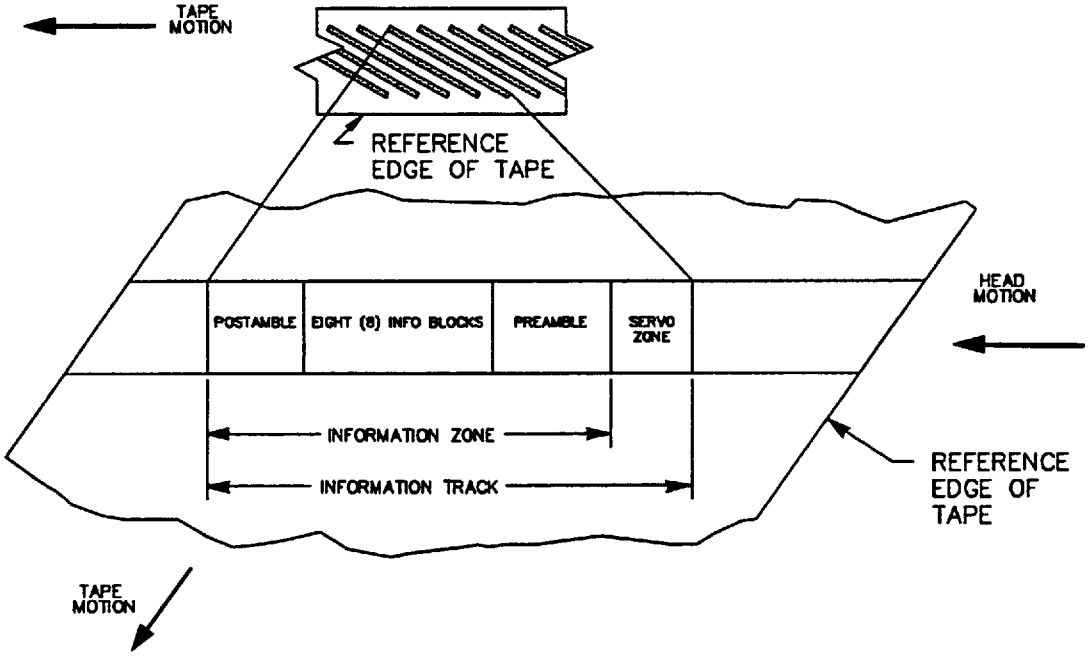

Figure 29 - Information Track

12.6.1 Format ID Track

The Information Zone of a Format ID Track shall consist of Format ID Blocks. Physical Block ID Numbers shall be assigned in ascending order to all blocks in every track, regardless of whether or not the track is recorded (see 14.9). The first Format ID Block of the first Format ID Track shall contain a Physical Block ID Number 0. The end of the LBOT area is at the conclusion of the 160th Format ID Track. The eighth block of the 160th Format ID Track shall contain the Physical Block ID Number [(160 x 8) - 1] = 1 279.

12.6.2 Data Track

The Information Zone of a Data Track shall consist of Data Blocks and/or Pad Blocks.

12.6.3 Tape Mark Track

The Information Zone of a Tape Mark Track shall consist of Tape Mark Blocks.

12.6.4 Splice Track

The Information Zone of a Splice Track shall consist of Pad Blocks. Whenever tape motion is halted during a write operation, a Splice Track shall be the last track recorded. Splice Tracks, when recorded, shall be recorded adjacent to Data Tracks, other Splice Tracks, or following a Tape Mark.

Copyright International Electrotechnical Commission
Provided by IHS under license with IEC
No reproduction or networking permitted without license from IHS
Not for Resale

13 Tape Mark

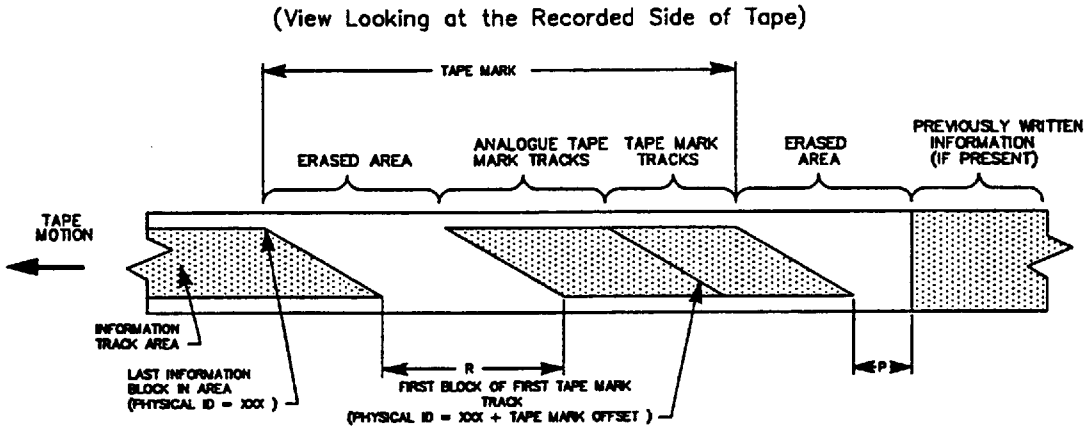

Figure 30 - Tape Mark layout

13.1 Description

Tape Marks may be used to delimit groups of recorded user data. There are two types of Tape Marks.

- A Long Tape Mark - Block Type (FA)
- A Short Tape Mark - Block Type (FB)

Both Tape Marks shall consist of a full width AC-erased area extending from the last written track for a distance dependent upon the type of Tape Mark, followed by 11 Analogue Tape Mark Tracks and 10 to 18 Tape Mark Tracks.

An Analogue Tape Mark Track shall consist of a Servo Zone followed by Tone extending over the entire Information Zone.

The first block of the first Tape Mark Track shall be recorded with the Physical Block ID Number equal to the Physical Block ID Number of the last Information Block plus the Tape Mark offset.

The nominal distance *R* is the distance between the centres of the two tracks bounding the erased area.

13.2 Long Tape Mark

The erased area shall extend for a nominal distance of 90,75 mm. This corresponds to 249 erased tracks. The Offset is [(249 + 11) x 8] + 1 = 2 081.

13.3 Short Tape Mark

There are two types of Short Tape Mark: a Normal Short Tape Mark and an Alternative Short Tape Mark.

13.3.1 Normal Short Tape Mark

The erased area shall extend for a nominal distance of 14,52 mm. This corresponds to 39 erased tracks. The Offset is [(39 + 11) x 8] + 1 = 401 .

13.3.2 Alternative Short Tape Mark

The erased area shall extend for a nominal distance of 1,089 mm. This corresponds to 2 erased tracks. The Offset is [(2+11) x 8] + 1 = 105 .

Copyright International Electrotechnical Commission
Provided by IHS under license with IEC
No reproduction or networking permitted without license from IHS
Not for Resale

14 ID Information

Each of the eight Physical Blocks of an Information Track contains 14 bytes of ID Information. These bytes are supplied and used by the tape sub-system for management of the sub-system. Within the Information Matrix field, Rows 00 to Row 13, all within Column 00 shall contain information pertaining to the Logical and Physical partitioning of User Data Blocks, Block Type, Rewrite Count, Start/End Logical Block Flags, and other subsystem control information.

14.1 Column 00, Row 00

The purpose of this byte is dependent upon the block type. The block type is specified in Column 00 Row 03.

14.1.1 Block Type - Data Block

If the block type is a Data Block then this byte shall have the following bit significance:

bit 7	shall be set to ONE
bit 6	This bit is used in the mapping of Logical Blocks to Physical Blocks. It signifies the start of a Logical Block within this Physical Block. This bit shall be set to ONE if, and only if, the first byte of a Logical Block is contained in this Physical Block, else it shall be set to ZERO.
bit 5	This bit is also used in the mapping of Logical Blocks to Physical Blocks. It signifies the end of a Logical Block within this Physical Block. This bit shall be set to ONE if, and only if, the last byte of a Logical Block is contained in this Physical Block, else it shall be set to ZERO.
bit 4	shall be set to ZERO
bits 3,2,1,0	These bits shall specify in binary notation the number modulo 16 of rewrites for this Logical Block. This number shall be 0 when the block is recorded the first time. For each rewrite this number shall be incremented by 1.

14.1.2 Block type - Tape Mark

If the block type is a Tape Mark then this byte shall specify in binary notation the number modulo 256 of Tape Marks recorded on this tape volume previous to the current Tape Mark.

14.1.3 Block type - Format ID

If the block type is a Format ID Block then the content of this byte shall be set to (00).

14.1.4 Block type - Pad Block

If the block type is a Pad Block, the contents of this byte shall be undefined and shall be ignored for interchange.

14.2 Column 00, Row 01

This byte shall be set to (00) for all block types.

14.3 Column 00, Row 02

This byte shall be set to (00) for all block types.

14.4 Column 00, Row 03

This byte defines the type of block. The Block Type ID shall be as follows:

(00) to (F7) = Data Blocks
(F8) = Reserved for future use
(F9) = Reserved for future use
(FA) = Long Tape Mark
(FB) = Short Tape Mark

Copyright International Electrotechnical Commission
Provided by IHS under license with IEC
No reproduction or networking permitted without license from IHS
Not for Resale

(FC) = Format ID
(FD) = Reserved for future use
(FE) = Pad Block
(FF) = Reserved for future use

The Block Type ID for the first Data Block after LBOT or a Tape Mark shall be (00). The Block Type ID shall increase continuously from (00) to (F7) and shall then restart at (00). The Block Type ID shall be reset after a Tape Mark.

14.5 Column 00, Row 04

This byte shall be set to (00) for all block types.

14.6 Column 00, Rows 05, 06

The purpose of these bytes is dependent upon the block type. The block type is defined in Column 00 Row 03.

If the block type is not a Data Block then the content of these bytes shall be undefined and ignored for interchange.

14.6.1 Row 05

If the block type is a Data Block then this byte shall contain the high order byte of a two-byte count representing the byte count of the User Data contained in this Physical Block. The content of this byte shall be in the range (00) to (03).

14.6.2 Row 06

If the block type is a Data Block then this byte shall contain the low order byte of a two-byte count representing the byte count of the User Data contained in this Physical Block. The content of this byte shall be in the range (00) to (FF). A high order byte content (00) and a low order byte content (00) shall represent a one-byte logical byte count.

14.7 Column 00, Row 07

This byte shall be set to (00) for all block types.

14.8 Column 00, Rows 08, 09, 10

The purpose of these bytes is dependent upon the block type. The block type is defined in Column 00, Row 03.

14.8.1 Block type - Data Block

If the block is a Data Block then these bytes represent the high order, the middle order and the low order bytes, respectively, of a 3-byte count representing the Logical ID number of this Logical Block. The content of each byte shall be in the range (00) to (FF). The Logical Block ID Number begins at 0 for the first Logical Block after LBOT or a Tape Mark and shall be incremented by 1 for each subsequent Logical Block.

As a Logical Block may extend over more than one Data Block, more than one Data Block may contain identical Logical Block ID Numbers.

14.8.2 Block type - non-Data Block

If the block type is not a Data Block then the content of these bytes shall be undefined and ignored for interchange.

14.9 Column 00, Rows 11, 12, 13

For all block types, these bytes represent the high order, the middle order and the low order bytes, respectively, of a 3-byte count representing the Physical ID Number of this block. The content of each byte shall be in the range (00) to (FF). The first block of the first Format ID Track shall contain the Physical Block ID Number 0. The number shall be incremented by 1 for each subsequent Information Block and by 8 for each erased track and each Analogue Tape Mark Track.

Copyright International Electrotechnical Commission
Provided by IHS under license with IEC
No reproduction or networking permitted without license from IHS
Not for Resale

15 Rewritten Information Blocks

When Information Blocks are rewritten, the ID Information of the rewritten block shall be identical with that of the original block, with the exception of the rewrite count and the Physical Block ID Number which represents the actual location of the rewritten block (see 14.1.1 and 14.9). The maximum displacement of a rewritten Information Block from its initial location shall be 121 Information Blocks. To ensure recorded data reliability, the quality of recorded blocks shall be such that no more than two segments of any recorded block contain missing pulse zones.

16 Physical tape format

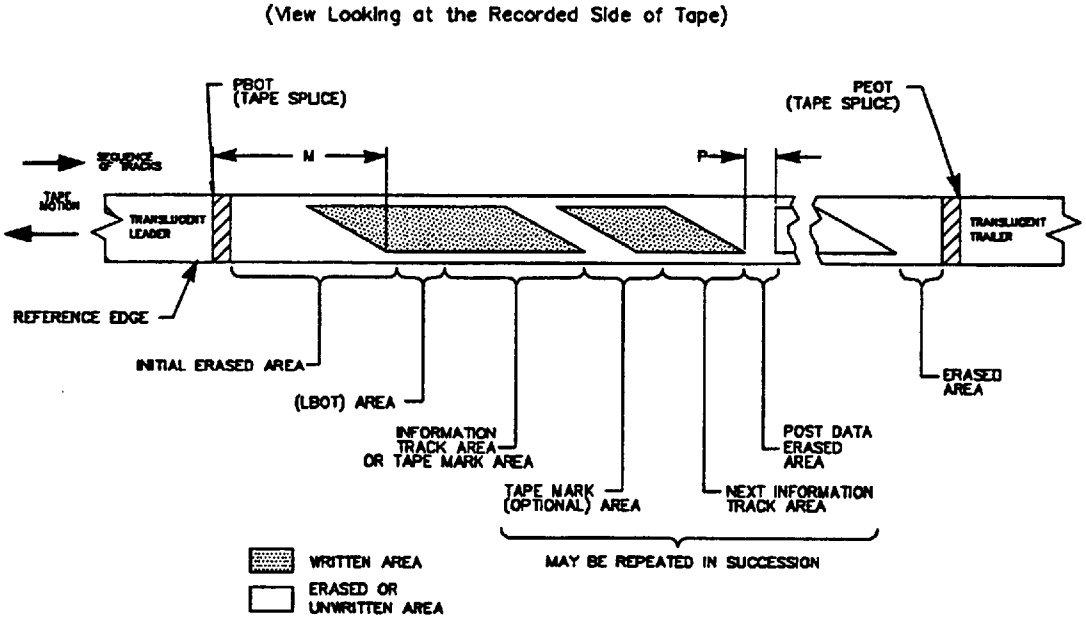

Figure 31 - Tape layout

16.1 Initial Erased Area

The Initial Erased Area shall commence with PBOT and extend for a distance *M* along the tape of 725,0 mm minimum and 745,0 mm maximum. It is terminated by the beginning of the LBOT Area.

Copyright International Electrotechnical Commission
Provided by IHS under license with IEC
No reproduction or networking permitted without license from IHS
Not for Resale

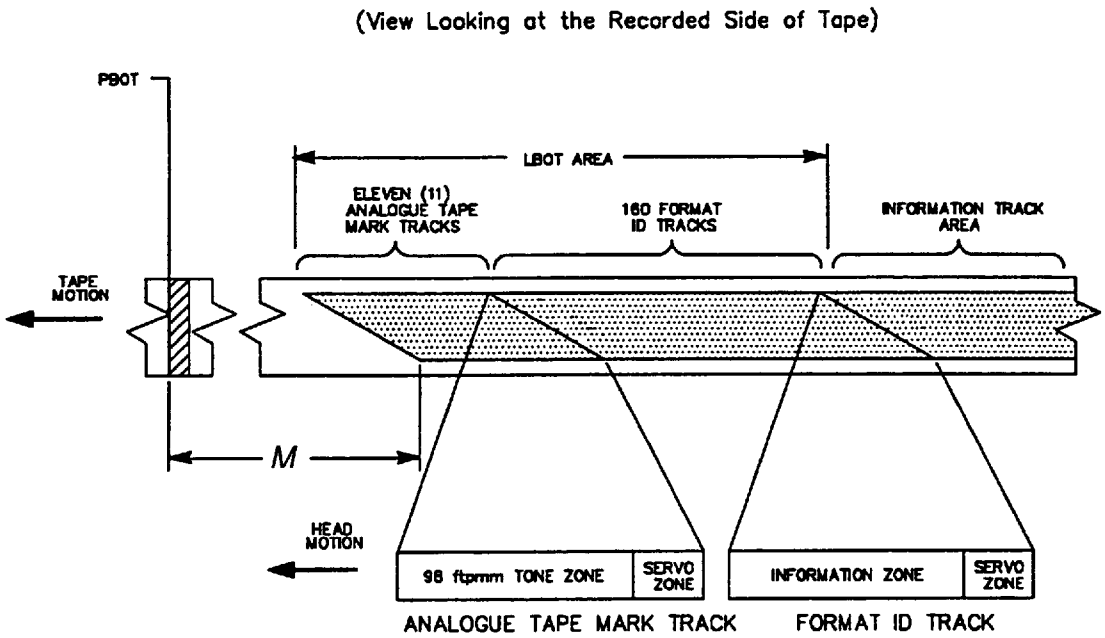

Figure 32 - Beginning of Tape layout

16.2 Logical Beginning of Tape Area (LBOT Area)

The LBOT Area shall consist of 11 Analogue Tape Mark Tracks followed by 160 Format ID Tracks.

16.3 Usable area of the tape

The area of the tape on which data may be recorded commences with the end of the LBOT Area and ends with the detection of PEOT.

16.4 Post Data erased area

The final recorded track shall be followed by an erased area *P* of length 119 mm minimum.

Copyright International Electrotechnical Commission
Provided by IHS under license with IEC
No reproduction or networking permitted without license from IHS
Not for Resale

Annex A
(normative)

Measurement of light transmittance of tape and leaders

A.1 Introduction

The following description outlines the general principle of the measuring equipment and measuring method to be applied when measuring the light transmittance of tape.

For the purpose of this International Standard light transmittance is defined by convention as the relationship between the reading obtained from the measuring equipment with the test piece inserted and the reading obtained when no test piece is present. The transmittance value is expressed as the percentage ratio of the two readings.

A.2 Description of the measuring equipment

The equipment shall comprise

- the radiation source;
- the radiation receiver;
- the measuring mask;
- the optical path;
- the measuring circuitry.

A.2.1 Radiation source

An infra-red light-emitting diode (LED) with the following parameters shall be used:

Wavelength at peak emission : 850 nm ± 50 nm

Half-power bandwidth : ± 50 nm

A.2.2 Radiation receiver

A flat silicon photo diode shall be used. It shall be operated in the short circuit mode.

A.2.3 Measuring mask

The measuring mask shall have a thickness of 2 mm and a circular aperture of diameter d such that the area is 80% to 100% of the active area of the photo diode.

The surface of the mask shall be mat black.

The test piece shall be held firmly against the mask to cover the aperture and to ensure that no ambient light leaks past.

A.2.4 Optical path (figure A.1)

The optical path shall be perpendicular to the mask. The distance, L, in millimetres, from the emitting surface of the LED to the mask shall be

$$L = \frac{d}{2 \tan \alpha}$$

Copyright International Electrotechnical Commission
Provided by IHS under license with IEC
No reproduction or networking permitted without license from IHS
Not for Resale

where α is the angle where the relative intensity of the LED is not less than 95% of the maximum intensity on the optical axis.

A.2.5 Finish

The whole assembly shall be enclosed in a mat black case.

A.2.6 Measuring Circuity (figure A.2)

The components of the measuring circuity are

E	: regulated power supply with variable output voltage
R	: current-limiting resistor
LED	: light-emitting diode
Di	: silicon photodiode
A	: operational amplifier
R_{f0}, R_{f1}	: feedback resistors
S	: gain switch
V	: voltmeter

The forward current of the LED, and consequently its radiation power, can be varied by means of the power supply E.

Di is operating in the short circuit mode.

The output voltage of the operational amplifier is given by

$V_0 = I_k \times R_f$ where I_k is the short-circuit current of Di.

The output voltage is therefore a linear function of the light intensity.

R_{f0} and R_{f1} shall be low temperature-drift resistors with an accuracy of 1%.

The following ratio applies : $\frac{R_{f0}}{R_{f1}} = \frac{1}{20}$

A.3 Measuring Method

Set switch S to position 0.

With no test piece mounted, vary the supply voltage of E until voltmeter V reads full scale (100%).

Mount a leader or trailer tape on the mask. The reading of the voltmeter shall be in the range 60% to 100%.

Mount a test piece of magnetic tape on the mask. Set switch S to position 1. Full deflection of the voltmeter now represents a light transmittance of 5%.

Copyright International Electrotechnical Commission
Provided by IHS under license with IEC
No reproduction or networking permitted without license from IHS
Not for Resale

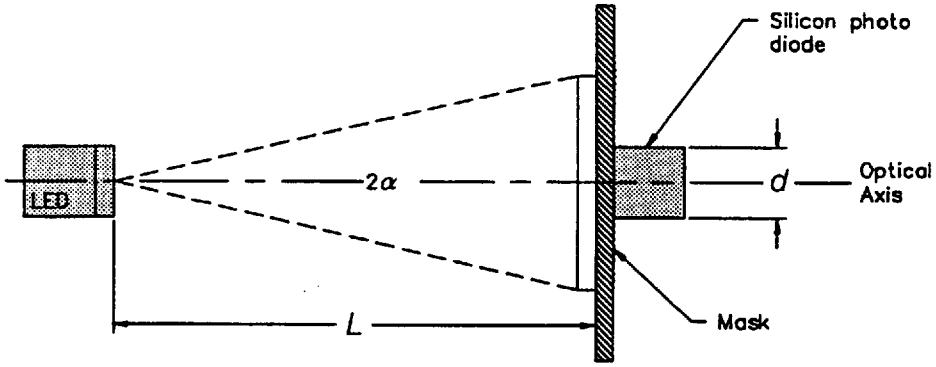

Figure A.1 - Optical arrangement

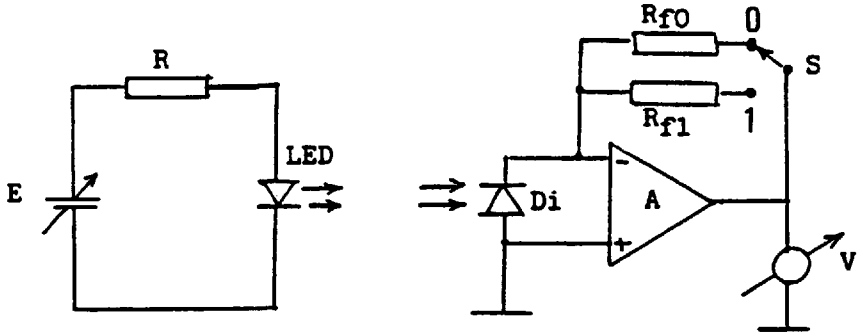

Figure A.2 - Measuring circuitry

Copyright International Electrotechnical Commission
Provided by IHS under license with IEC
No reproduction or networking permitted without license from IHS
Not for Resale

Annex B
(normative)

Measurement of bit shift

The equipment normally used for recording interchange cartridges shall be used for recording the tape under test.

The tape shall be written in any mode compatible with system operation.

B.1 Read equipment

The tape shall be read on any tape transport which supports a linearity of the track edges within 5 μm.

There are no absolute requirements on the output voltage from the read head. However, the head design, the rotary transformer, the pre-amplifier, and the head to tape speed shall be chosen to avoid problems from low signal to noise ratios. The frequency response of the head, transformer, pre-amplifier and associated connections shall only be limited at the low end by the transformer and at the high end by the pre-amplifier.

Read Head	
Gap Length	0,30 μm ± 0,05 μm
Resonant Frequency	≥ 15 times the ONEs frequency
Track Width	25 μm ± 1 μm
Azimuth	-10,000° ± 0,133°
Rotary Transformer	
Bandwidth	f_{high}(-3 dB) ≥ 4 times the ONEs frequency f_{low}(-3 dB) ≤ 1/400 times the ONEs frequency
Pre-amplifier	
Gain	≥ 100
Input Noise	≤ 2 nV/√Hz
Bandwidth	f_{high} (-3 dB) ≥3 times the ONEs frequency f_{low} (-3 dB) ≤ 1/400 times the ONEs frequency
Read Filters	
Low pass filter	The low pass filter shall have at least a third order Butterworth response with a cut-off frequency equal to two times the ONEs frequency.
High pass filter	The high pass filter shall have at least two dominant poles located at 1/40 of the ONEs frequency, with a Q = 0,7 (All other AC coupling poles shall be located at 1/800 of the ONEs frequency).

Copyright International Electrotechnical Commission
Provided by IHS under license with IEC
No reproduction or networking permitted without license from IHS
Not for Resale

Equalizer:

The transfer function of the equalizer shall be:

$$G(S) = \frac{K(S+\omega_z)(S-\omega_z)}{(S+\omega_p)\dfrac{(S^2+S\omega_0)}{(Q+\omega_0^2)}}$$

where:

$K \geq 1$
$\omega_i = 2\pi f_i$
f_z = 1/4 of the ONEs frequency
f_p = 1/40 of the ONEs frequency
f_0 = 2 times the ONEs frequency
Q = 0,7

B.2 Measurement

The average bit cell length L is obtained from any two reference zero crossings (RZC) located on either side of the test zero crossing (TZC). A reference zero crossing is a ONE zero crossing with at least two adjacent ONE zero crossings on each side. The RZCs shall not be more than 40 bit cells apart in order to keep the maximum error due to the rate of change below 2%.

The requirement for bit shift specified in 10.2 shall be met when any user data has been recorded as specified in clauses 9 to 16.

B.3 Data Analysis

Where

RZC is a reference zero crossing
TZC is the test zero crossing
P_n is the position of the nth ONEs zero crossing

If n is the number of bit cells between reference zero crossings, the average bit cell length is

$$L = \frac{P_3 - P_1}{n}$$

If there are m bit intervals between the first reference zero crossing and the test zero crossing, then

$$\text{Bit shift in percent} = \frac{\left|mL - (P_2 - P_1)\right|}{L} \times 100$$

Copyright International Electrotechnical Commission
Provided by IHS under license with IEC
No reproduction or networking permitted without license from IHS
Not for Resale

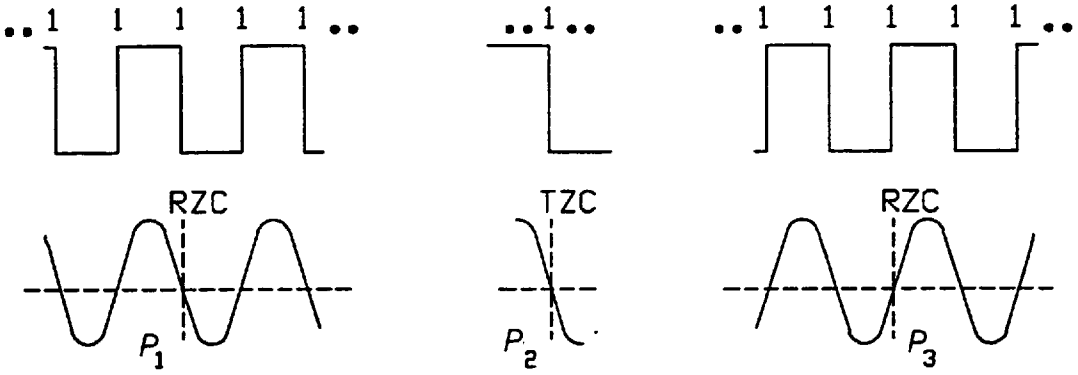

Figure B.1 - Measurement of waveform

Copyright International Electrotechnical Commission
Provided by IHS under license with IEC
No reproduction or networking permitted without license from IHS
Not for Resale

Annex C
(normative)

Representation of 8-bit bytes by 10-bit patterns

The 8-bit bytes are represented with the most-significant bit to the left and the least significant bit to the right. The 10-bit patterns are represented with the bit recorded first to the left and the bit recorded last to the right. The left-hand column indicates the hexadecimal notation of the 8-bit byte for ease of search.

	8-bit BYTES	10-bit PATTERNS		8-bit BYTES	10-bit PATTERNS
(00)	00000000	0100100101	(40)	01000000	1010101001
(01)	00000001	0100100111	(41)	01000001	1010101011
(02)	00000010	0100101010	(42)	01000010	1010101110
(03)	00000011	0100101101	(43)	01000011	1010110010
(04)	00000100	0100101111	(44)	01000100	1010110101
(05)	00000101	0100111001	(45)	01000101	1010110111
(06)	00000110	0100111011	(46)	01000110	1010111010
(07)	00000111	0100111110	(47)	01000111	1010111101
(08)	00001000	0101001001	(48)	01001000	1011100101
(09)	00001001	0101001011	(49)	01001001	1011100111
(0A)	00001010	0101001110	(4A)	01001010	1011101010
(0B)	00001011	0101010010	(4B)	01001011	1011101101
(0C)	00001100	0101010101	(4C)	01001100	1011101111
(0D)	00001101	0101010111	(4D)	01001101	1011111001
(0E)	00001110	0101011010	(4E)	01001110	1011111011
(0F)	00001111	0101011101	(4F)	01001111	1011111110
(10)	00010000	0101101001	(50)	01010000	1100100101
(11)	00010001	0101101011	(51)	01010001	1100100111
(12)	00010010	0101101110	(52)	01010010	1100101010
(13)	00010011	0101110010	(53)	01010011	1100101101
(14)	00010100	0101110101	(54)	01010100	1100101111
(15)	00010101	0101110111	(55)	01010101	1100111001
(16)	00010110	0101111010	(56)	01010110	1100111011
(17)	00010111	0101111101	(57)	01010111	1100111110
(18)	00011000	0110100101	(58)	01011000	1101001001
(19)	00011001	0110100111	(59)	01011001	1101001011
(1A)	00011010	0110101010	(5A)	01011010	1101001110
(1B)	00011011	0110101101	(5B)	01011011	1101010010
(1C)	00011100	0110101111	(5C)	01011100	1101010101
(1D)	00011101	0110111001	(5D)	01011101	1101010111
(1E)	00011110	0110111011	(5E)	01011110	1101011010
(1F)	00011111	0110111110	(5F)	01011111	1101011101
(20)	00100000	0111001001	(60)	01100000	1101101001
(21)	00100001	0111001011	(61)	01100001	1101101011
(22)	00100010	0111001110	(62)	01100010	1101101110
(23)	00100011	0111010010	(63)	01100011	1101110010
(24)	00100100	0111010101	(64)	01100100	1101110101
(25)	00100101	0111010111	(65)	01100101	1101110111

Copyright International Electrotechnical Commission
Provided by IHS under license with IEC
No reproduction or networking permitted without license from IHS
Not for Resale

	8-bit BYTES	10-bit PATTERNS		8-bit BYTES	10-bit PATTERNS
(26)	00100110	0111011010	(66)	01100110	1101111010
(27)	00100111	0111011101	(67)	01100111	1101111101
(28)	00101000	0111101001	(68)	01101000	1110100101
(29)	00101001	0111101011	(69)	01101001	1110100111
(2A)	00101010	0111101110	(6A)	01101010	1110101010
(2B)	00101011	0111110010	(6B)	01101011	1110101101
(2C)	00101100	0111110101	(6C)	01101100	1110101111
(2D)	00101101	0111110111	(6D)	01101101	1110111001
(2E)	00101110	0111111010	(6E)	01101110	1110111011
(2F)	00101111	0111111101	(6F)	01101111	1110111110
(30)	00110000	1001110011	(70)	01110000	1111001001
(31)	00110001	1001110110	(71)	01110001	1111001011
(32)	00110010	1001001010	(72)	01110010	1111001110
(33)	00110011	1001001101	(73)	01110011	1111010010
(34)	00110100	1001001111	(74)	01110100	1111010101
(35)	00110101	1001011001	(75)	01110101	1111010111
(36)	00110110	1001011011	(76)	01110110	1111011010
(37)	00110111	1001011110	(77)	01110111	1111011101
(38)	00111000	0110010011	(78)	01111000	1111101001
(39)	00111001	0110010110	(79)	01111001	1111101011
(3A)	00111010	1010011111	(7A)	01111010	1111101110
(3B)	00111011	1010010010	(7B)	01111011	1111110010
(3C)	00111100	1010010101	(7C)	01111100	1111110101
(3D)	00111101	1010010111	(7D)	01111101	1111110111
(3E)	00111110	1010011010	(7E)	01111110	1111111010
(3F)	00111111	1010011101	(7F)	01111111	1111111101
(80)	10000000	0100101011	(C0)	11000000	0101001101
(81)	10000001	0100101110	(C1)	11000001	1011010011
(82)	10000010	0100110101	(C2)	11000010	1011010110
(83)	10000011	0100111010	(C3)	11000011	0101011001
(84)	10000100	0101101010	(C4)	11000100	0110010101
(85)	10000101	0101101111	(C5)	11000101	1010011001
(86)	10000110	0101111011	(C6)	11000110	0110011010
(87)	10000111	0101111110	(C7)	11000111	0110011111
(88)	10001000	0111001010	(C8)	11001000	0110101001
(89)	10001001	0111001111	(C9)	11001001	0110110010
(8A)	10001010	0111011011	(CA)	11001010	0110110111
(8B)	10001011	0111011110	(CB)	11001011	0110111101
(8C)	10001100	1001001011	(CC)	11001100	0111100111
(8D)	10001101	1001001110	(CD)	11001101	0111101101
(8E)	10001110	1001010101	(CE)	11001110	0111111001
(8F)	10001111	1001011010	(CF)	11001111	0101111111
(90)	10010000	1001101001	(D0)	11010000	1100101001
(91)	10010001	1001110010	(D1)	11010001	1100110010
(92)	10010010	1001110111	(D2)	11010010	1100110111
(93)	10010011	1001111101	(D3)	11010011	1100111101
(94)	10010100	1010101010	(D4)	11010100	1101100111
(95)	10010101	1010101111	(D5)	11010101	1101101101

Copyright International Electrotechnical Commission
Provided by IHS under license with IEC
No reproduction or networking permitted without license from IHS
Not for Resale

	8-bit BYTES	10-bit PATTERNS
(96)	10010110	1010111011
(97)	10010111	1010111110
(98)	10011000	1011001001
(99)	10011001	1011010010
(9A)	10011010	1011010111
(9B)	10011011	1011011101
(9C)	10011100	1011101011
(9D)	10011101	1011101110
(9E)	10011110	1011110101
(9F)	10011111	1011111010
(A0)	10100000	1101001010
(A1)	10100001	1101001111
(A2)	10100010	1101011011
(A3)	10100011	1101011110
(A4)	10100100	1010100101
(A5)	10100101	1110010010
(A6)	10100110	1110010111
(A7)	10100111	1110011101
(A8)	10101000	1110101011
(A9)	10101001	1110101110
(AA)	10101010	1110110101
(AB)	10101011	1110111010
(AC)	10101100	1111100101
(AD)	10101101	1111101010
(AE)	10101110	1111101111
(AF)	10101111	1111111011
(B0)	10110000	0100111111
(B1)	10110001	1001011111
(B2)	10110010	1011111111
(B3)	10110011	1110111111
(B4)	10110100	0101100101
(B5)	10110101	0110100110
(B6)	10110110	1111010011
(B7)	10110111	1111010110
(B8)	10111000	0101010011
(B9)	10111001	0111110011
(BA)	10111010	1010010011
(BB)	10111011	1101110011
(BC)	10111100	0101010110
(BD)	10111101	0111110110
(BE)	10111110	1010010110
(BF)	10111111	1101110110

	8-bit BYTES	10-bit PATTERNS
(D6)	11010110	1101111001
(D7)	11010111	1101111111
(D8)	11011000	1111001101
(D9)	11011001	1110010011
(DA)	11011010	1110010110
(DB)	11011011	1111011001
(DC)	11011100	0101011111
(DD)	11011101	0111011111
(DE)	11011110	1010111111
(DF)	11011111	1101011111
(E0)	11100000	0111101010
(E1)	11100001	0111101111
(E2)	11100010	0111111011
(E3)	11100011	0111111110
(E4)	11100100	1101101010
(E5)	11100101	1101101111
(E6)	11100110	1101111011
(E7)	11100111	1101111110
(E8)	11101000	1111001111
(E9)	11101001	1111011011
(EA)	11101010	1111011110
(EB)	11101011	1100111111
(EC)	11101100	0110101110
(ED)	11101101	1111110011
(EE)	11101110	1111110110
(EF)	11101111	0110111111
(F0)	11110000	1010101101
(F1)	11110001	0111010110
(F2)	11110010	0101011110
(F3)	11110011	1001111111
(F4)	11110100	1011010101
(F5)	11110101	1011110111
(F6)	11110110	1011111101
(F7)	11110111	1011011111
(F8)	11111000	1100100110
(F9)	11111001	1110110111
(FA)	11111010	1110111101
(FB)	11111011	1110011111
(FC)	11111100	1111100111
(FD)	11111101	1111101101
(FE)	11111110	1111111001
(FF)	11111111	1111011111

Copyright International Electrotechnical Commission
Provided by IHS under license with IEC
No reproduction or networking permitted without license from IHS
Not for Resale

Annex D
(informative)

Recommendations for transportation

D.1 Environment

It is recommended that during transportation the cartridges are kept within the following conditions

temperature: - 40 °C to 45 °C
relative humidity: 5% to 80%
maximum wet bulb temperature: 26 °C

There should be no condensation in or on the cartridge.

D.2 Hazards

Transportation of tape cartridges involves three basic potential hazards.

D.2.1 Impact loads and vibrations

The following recommendations should minimize damage to tape cartridges during transportation:

a) Avoid mechanical loads that would distort the cartridge shape.

b) Avoid dropping the cartridge more than 1 m.

c) Cartridges should be fitted into a rigid box containing adequate shock-absorbent material.

d) The final box should have a clean interior and a construction that provides sealing to prevent the ingress of dirt and water.

e) The orientation of the cartridges inside the final box should be such that the axes of the tape reels are horizontal.

f) The final box should be clearly marked to indicate its correct orientation.

D.2.2 Extremes of temperature and humidity

Extreme changes in temperature and humidity should be avoided whenever possible. Whenever a cartridge is received it should be conditioned in the operating environment for a period of at least 24 h.

D.2.3 Effects of stray magnetic fields

A nominal spacing of not less than 80 mm should exist between the cartridge and the outer surface of the shipping container to minimize the risk of corruption.

Copyright International Electrotechnical Commission
Provided by IHS under license with IEC
No reproduction or networking permitted without license from IHS
Not for Resale

Annex E
(informative)

Inhibitor tape

Any tape that degrades the performance of the tape drive or other tapes is called an inhibitor tape. Certain tape characteristics can contribute to poor tape drive performance. Tapes having these characteristics may not give satisfactory performance, can result in excessive errors and can interfere with the subsequent performances of other tapes.

E.1 Inhibitor characteristics

These characteristics include

- high abrasivity;
- high friction to tape path components;
- poor edge conditions;
- electrostatic charge build-up on the tape or tape path components;
- interlayer slippage;
- transfer of recording surface coating to the back of the next tape layer;
- separation of tape constituents causing deposits that may lead to tape sticking or poor performance of other tapes.

Tapes to be used in this cartridge should not be inhibitor tapes.

Copyright International Electrotechnical Commission
Provided by IHS under license with IEC
No reproduction or networking permitted without license from IHS
Not for Resale

UDC 681.327.636

Descriptors: data processing, information interchange, data recording, data recording devices, magnetic tapes, magnetic tape cartridges, specifications, interchangeability.

Price based on 63 pages

Copyright International Electrotechnical Commission
Provided by IHS under license with IEC
No reproduction or networking permitted without license from IHS
Not for Resale