INTERNATIONAL STANDARD

ISO/IEC 10373-6

First edition
2001-05-15

Identification cards — Test methods —

Part 6: Proximity cards

Cartes d'identification — Méthodes d'essai —

Partie 6: Cartes de proximité

Reference number
ISO/IEC 10373-6:2001(E)

© ISO/IEC 2001

--`,,```,,,,````-`-`,,`,,`,`,,`---

Copyright International Organization for Standardization
Provided by IHS under license with ISO
No reproduction or networking permitted without license from IHS

Not for Resale

PDF disclaimer

This PDF file may contain embedded typefaces. In accordance with Adobe's licensing policy, this file may be printed or viewed but shall not be edited unless the typefaces which are embedded are licensed to and installed on the computer performing the editing. In downloading this file, parties accept therein the responsibility of not infringing Adobe's licensing policy. The ISO Central Secretariat accepts no liability in this area.

Adobe is a trademark of Adobe Systems Incorporated.

Details of the software products used to create this PDF file can be found in the General Info relative to the file; the PDF-creation parameters were optimized for printing. Every care has been taken to ensure that the file is suitable for use by ISO member bodies. In the unlikely event that a problem relating to it is found, please inform the Central Secretariat at the address given below.

© ISO/IEC 2001

All rights reserved. Unless otherwise specified, no part of this publication may be reproduced or utilized in any form or by any means, electronic or mechanical, including photocopying and microfilm, without permission in writing from either ISO at the address below or ISO's member body in the country of the requester.

ISO copyright office
Case postale 56 • CH-1211 Geneva 20
Tel. + 41 22 749 01 11
Fax + 41 22 749 09 47
E-mail copyright@iso.ch
Web www.iso.ch

Printed in Switzerland

--`,,```,,,,````-`-`,,`,,`,`,,`---

Copyright International Organization for Standardization
Provided by IHS under license with ISO
No reproduction or networking permitted without license from IHS

Not for Resale

© ISO/IEC 2001 – All rights reserved

Contents

Page

Foreword v

1 Scope 1

2 Normative references 1

3 Terms and definitions, abbreviations and symbols 2
3.1 Terms and definitions 2
3.2 Abbreviations and symbols 2

4 Default items applicable to the test methods 3
4.1 Test environment 3
4.2 Pre-conditioning 3
4.3 Default tolerance 3
4.4 Spurious Inductance 3
4.5 Total measurement uncertainty 3

5 Static electricity test 3
5.1 Apparatus 3
5.2 Procedure 4
5.3 Test report 4

6 Test apparatus and test circuits 5
6.1 Calibration coil 5
6.1.1 Size of the Calibration coil card 5
6.1.2 Thickness and material of the Calibration coil card 5
6.1.3 Coil characteristics 5
6.2 Test PCD assembly 6
6.2.1 Test PCD antenna 6
6.2.2 Sense coils 6
6.2.3 Assembly of Test PCD 7
6.3 Reference PICCs 7
6.3.1 Reference PICC for H_{min}, H_{max} and PCD power 7
6.3.2 Reference PICC for load modulation test 7
6.3.3 Dimensions of the Reference PICCs 8
6.3.4 Thickness of the Reference PICCs board 8
6.3.5 Coil characteristics 8
6.4 Digital sampling oscilloscope 8

7 Functional test - PICC 8
7.1 Purpose 8
7.2 Test procedure 8
7.3 Test report 9

8 Functional test - PCD 9
8.1 PCD field strength 9
8.1.1 Purpose 9
8.1.2 Test procedure 9
8.1.3 Test report 10
8.2 Power transfer PCD to PICC 10
8.2.1 Purpose 10
8.2.2 Test procedure 10
8.2.3 Test report 10
8.3 Modulation index and waveform 10
8.3.1 Purpose 10
8.3.2 Test procedure 10

© ISO/IEC 2001 – All rights reserved

Copyright International Organization for Standardization
Provided by IHS under license with ISO
No reproduction or networking permitted without license from IHS
Not for Resale

8.3.3 Test report **10**
8.4 Load modulation reception (informative only) **11**
8.4.1 Purpose **11**
8.4.2 Test procedure **11**

Annex A (normative) **Test PCD Antenna** **12**
A.1 Test PCD Antenna layout including impedance matching network **12**
A.2 Impedance matching network **14**

Annex B (informative) **Test PCD Antenna tuning** **15**

Annex C (normative) **Sense coil** **17**
C.1 Sense coil layout **17**
C.2 Sense coil assembly **18**

Annex D (normative) **Reference PICC for field and power measurements** **19**

Annex E (informative) **Reference PICC for load modulation test** **20**

Annex F (informative) **Program for the evaluation of the spectrum** **21**

--`,,```,,,,````-`-`,,`,,`,`,,`---

Copyright International Organization for Standardization
Provided by IHS under license with ISO
No reproduction or networking permitted without license from IHS

Not for Resale

© ISO/IEC 2001 – All rights reserved

Foreword

ISO (the International Organization for Standardization) and IEC (the International Electrotechnical Commission) form the specialized system for worldwide standardization. National bodies that are members of ISO or IEC participate in the development of International Standards through technical committees established by the respective organization to deal with particular fields of technical activity. ISO and IEC technical committees collaborate in fields of mutual interest. Other international organizations, governmental and non-governmental, in liaison with ISO and IEC, also take part in the work.

International Standards are drafted in accordance with the rules given in the ISO/IEC Directives, Part 3.

In the field of information technology, ISO and IEC have established a joint technical committee, ISO/IEC JTC 1. Draft International Standards adopted by the joint technical committee are circulated to national bodies for voting. Publication as an International Standard requires approval by at least 75 % of the national bodies casting a vote.

Attention is drawn to the possibility that some of the elements of this part of ISO/IEC 10373 may be the subject of patent rights. ISO and IEC shall not be held responsible for identifying any or all such patent rights.

International Standard ISO/IEC 10373-6 was prepared by Joint Technical Committee ISO/IEC JTC 1, *Information technology*, Subcommittee SC 17, *Identification cards and related devices*.

ISO/IEC 10373 consists of the following parts, under the general title *Identification cards — Test methods*:

— *Part 1: General characteristics tests*

— *Part 2: Cards with magnetic stripes*

— *Part 3: Integrated circuit(s) cards with contacts and related interface devices*

— *Part 4: Close-coupled cards*

— *Part 5: Optical memory cards*

— *Part 6: Proximity cards*

— *Part 7: Vicinity cards*

Annexes A, C and D form a normative part of this part of ISO/IEC 10373. Annexes B, E and F are for information only.

--`,,```,,,,````-`-`,,`,,`,`,,`---

© ISO/IEC 2001 – All rights reserved

Copyright International Organization for Standardization
Provided by IHS under license with ISO
No reproduction or networking permitted without license from IHS
Not for Resale

Copyright International Organization for Standardization
Provided by IHS under license with ISO
No reproduction or networking permitted without license from IHS
Not for Resale

Identification cards — Test methods —

Part 6:
Proximity cards

1 Scope

This International Standard defines test methods for characteristics of identification cards according to the definition given in ISO/IEC 7810. Each test method is cross-referenced to one or more base standards, which may be ISO/IEC 7810 or one or more of the supplementary standards that define the information storage technologies employed in identification cards applications.

NOTE 1 Criteria for acceptability do not form part of this International Standard but will be found in the International Standards mentioned above.

NOTE 2 Test methods described in this International Standard are intended to be performed separately. A given card is not required to pass through all the tests sequentially.

This part of ISO/IEC 10373 deals with test methods which are specific to contactless integrated circuit(s) card technology (Proximity cards). ISO/IEC 10373-1, General characteristics, deals with test methods which are common to one or more ICC technologies and other parts deal with other technology-specific tests.

Unless otherwise specified, the tests in this part of ISO/IEC 10373 shall be applied exclusively to Proximity cards defined in ISO/IEC 14443-1 and ISO/IEC 14443-2.

2 Normative references

The following normative documents contain provisions which, through reference in this text, constitute provisions of this part of ISO 10373. For dated references, subsequent amendments to, or revisions of, any of these publications do not apply. However, parties to agreements based on this part of ISO 10373 are encouraged to investigate the possibility of applying the most recent editions of the normative documents indicated below. For undated references, the latest edition of the normative document referred to applies. Members of ISO and IEC maintain registers of currently valid International Standards.

ISO/IEC 7810:1995, *Identification cards — Physical characteristics.*

ISO/IEC 14443-1, *Identification cards — Contactless integrated circuit(s) cards — Proximity cards — Part 1: Physical characteristics.*

ISO/IEC 14443-2, *Identification cards — Contactless integrated circuit(s) cards — Proximity cards — Part 2: Radio frequency power and signal interface.*

ISO/IEC 14443-3, *Identification cards — Contactless integrated circuit(s) cards — Proximity cards — Part 3: Initialization and anticollision.*

IEC 61000-4-2: 1995, *Electromagnetic compatibility (EMC) — Part 4: Testing and measurement techniques — Section 2: Electrostatic discharge immunity test.*

BIPM, IEC, IFCC, ISO, IUPAC, IUPAP, OIML, 1993, *Guide to the Expression of Uncertainty in Measurement (Gum).*

© ISO/IEC 2001 – All rights reserved

Copyright International Organization for Standardization
Provided by IHS under license with ISO
No reproduction or networking permitted without license from IHS
Not for Resale

3 Terms and definitions, abbreviations and symbols

For the purposes of this part of ISO/IEC 10373, the following terms and definitions and abbreviations apply.

3.1 Terms and definitions

3.1.1
base standard
standard which the test method is used to verify conformance to

3.1.2
testably functional
surviving the action of some potentially destructive influence to the extent that any integrated circuit(s) present in the card continues to show a response[1)] as defined in ISO/IEC 14443-3 which conforms to the base standard

NOTE If other technologies exist on the same card they shall be testably functional in accordance with their respective standard.

3.1.3
test method
method for testing characteristics of identification cards for the purpose of confirming their compliance with International Standards

3.2 Abbreviations and symbols

DUT Device under test

ESD Electrostatic Discharge

fc Frequency of the operating field

fs Frequency of the subcarrier

H_{max} Maximum fieldstrength of the PCD antenna field

H_{min} Minimum fieldstrength of the PCD antenna field

PCD Proximity Coupling Device

PICC Proximity Card

1) This International Standard does not define any test to establish the complete functioning of integrated circuit(s) cards. The test methods require only that the minimum functionality (testably functional) be verified. This may, in appropriate circumstances, be supplemented by further, application specific functionality criteria which are not available in the general case.

© ISO/IEC 2001 – All rights reserved
Copyright International Organization for Standardization
Provided by IHS under license with ISO
No reproduction or networking permitted without license from IHS
Not for Resale

4 Default items applicable to the test methods

4.1 Test environment

Unless otherwise specified, testing shall take place in an environment of temperature 23 °C ± 3 °C (73 °F ± 5 °F) and of relative humidity 40 % to 60 %.

4.2 Pre-conditioning

Where pre-conditioning is required by the test method, the identification cards to be tested shall be conditioned to the test environment for a period of 24 h before testing.

4.3 Default tolerance

Unless otherwise specified, a default tolerance of ± 5 % shall be applied to the quantity values given to specify the characteristics of the test equipment (e.g. linear dimensions) and the test method procedures (e.g. test equipment adjustments).

4.4 Spurious Inductance

Resistors and capacitors should have negligible inductance.

4.5 Total measurement uncertainty

The total measurement uncertainty for each quantity determined by these test methods shall be stated in the test report.

Basic information is given in Gum, 1993.

5 Static electricity test

The purpose of this test is to check the behaviour of the card IC in relation to electrostatic discharge (ESD) exposure in the test sample. The card under test is exposed to a simulated electrostatic discharge (ESD, human body model) and its basic operation checked following the exposure.

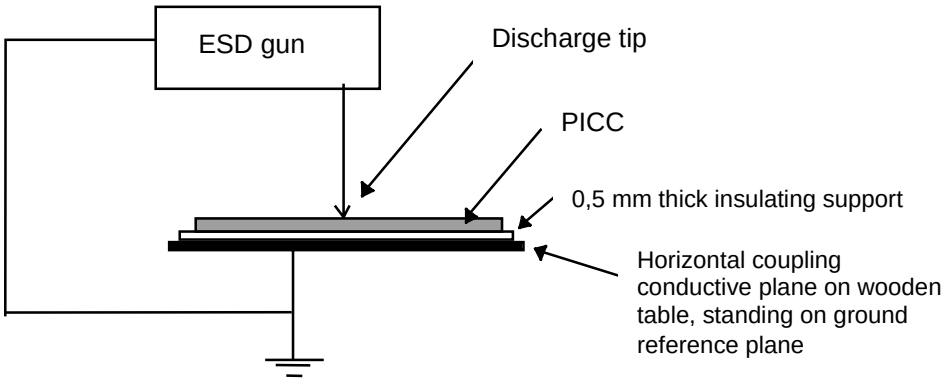

Figure 1 — ESD test circuit

5.1 Apparatus

Refer to IEC 61000-4-2:1995.

© ISO/IEC 2001 – All rights reserved

Copyright International Organization for Standardization
Provided by IHS under license with ISO
No reproduction or networking permitted without license from IHS
Not for Resale

a) Main specifications of the ESD generator

- energy storage capacitance: 150 pF ± 10 %
- discharge resistance: 330 Ohm ± 10 %
- charging resistance: between 50 MOhm and 100 MOhm
- rise time: 0,7 to 1 ns

b) Selected specifications from the optional items

- type of equipment: table top equipment
- discharge method: direct and contact discharge to the equipment under test
- discharge electrodes of the ESD generator: Round tip probe of 8 mm diameter (to avoid breaking the surface label layer of card).

5.2 Procedure

Connect the ground pin of the apparatus to the conductive plate upon which the card is placed.

Apply the discharge successively in normal polarity to each of the 20 test zones shown in figure 2. Then repeat the same procedure with reversed polarity. Allow a cool-down period between successive pulses of at least 10 s.

WARNING — If the card includes contacts, the contacts shall be face up and the zone which includes contacts shall not be exposed to this discharge.

Check that the card remains testably functional (see clause 3) at the end of the test.

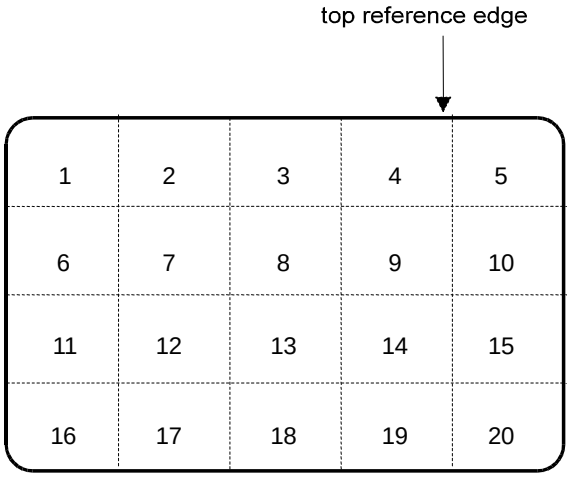

Figure 2 — Test zones on card for ESD test

5.3 Test report

The test report shall state whether or not the card remains testably functional.

© ISO/IEC 2001 – All rights reserved
Copyright International Organization for Standardization
Provided by IHS under license with ISO
No reproduction or networking permitted without license from IHS
Not for Resale

6 Test apparatus and test circuits

This clause defines the test apparatus and test circuits for verifying the operation of a PICC or a PCD according to ISO/IEC 14443-2. The test apparatus includes:

— Calibration coil (see 6.1)

— Test PCD assembly (see 6.2)

— Reference PICCs (see 6.3)

— Digital sampling oscilloscope (see 6.4)

These are described in the following clauses.

6.1 Calibration coil

This clause defines the size, thickness and characteristics of the calibration coil.

6.1.1 Size of the Calibration coil card

The calibration coil card shall consist of an area which has the height and width of an ID-1 type defined in ISO/IEC 7810 containing a single turn coil concentric with the card outline.

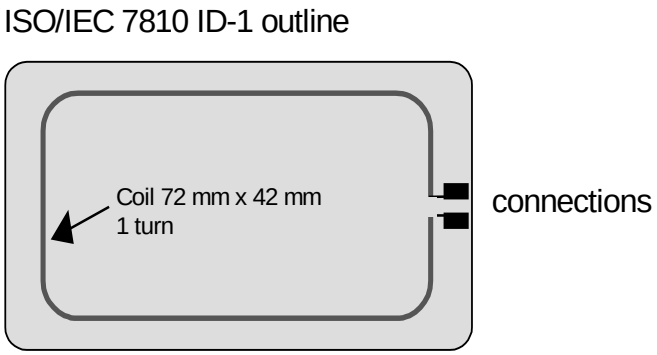

Figure 3 — Calibration coil

6.1.2 Thickness and material of the Calibration coil card

The thickness of the calibration coil card shall be 0,76 mm ± 10 %. It shall be constructed of a suitable insulating material.

6.1.3 Coil characteristics

The coil on the calibration coil card shall have one turn. The outer size of the coil shall be 72 mm × 42 mm with corner radius 5 mm. Relative dimensional tolerance shall be ± 2 %.

NOTE The area over which the field is integrated is approximately 3000 mm^2.

The coil shall be made as a printed coil on PCB plated with 35 µm copper. Track width shall be 500 µm with a relative tolerance of ± 20 %. The size of the connection pads shall be 1,5 mm × 1,5 mm.

NOTE At 13,56 MHz the approximate inductance is 200 nH and the approximate resistance is 0,25 Ohm.

© ISO/IEC 2001 – All rights reserved

Copyright International Organization for Standardization
Provided by IHS under license with ISO
No reproduction or networking permitted without license from IHS
Not for Resale

A high impedance oscilloscope probe (e.g. > 1MOhm, < 14pF) shall be used to measure the (open circuit) voltage induced in the coil. The resonance frequency of the calibration coil and connecting leads shall be above 60 MHz.

NOTE A parasitic capacitance of the probe assembly of less than 35 pF normally ensures a resonant frequency for the whole set of greater than 60 MHz.

The open circuit calibration factor for this coil is 0,32 Volts (rms) per A/m (rms). [Equivalent to 900 mV (peak-to-peak) per A/m (rms)]

6.2 Test PCD assembly

The test PCD assembly shall consist of a 150 mm diameter PCD antenna and two parallel sense coils: sense coil a and sense coil b. The test set-up is shown in figure 4. The sense coils shall be connected such that the signal from one coil is in opposite phase to the other. The 50 Ohm potentiometer P1 serves to fine adjust the balance point when the sense coils are not loaded by a PICC or any magnetically coupled circuit. The capacitive load of the probe including its parasitic capacitance shall be less than 14 pF.

NOTE The capacitance of the connections and of the oscilloscope probe should be kept to a minimum for reproducibility.

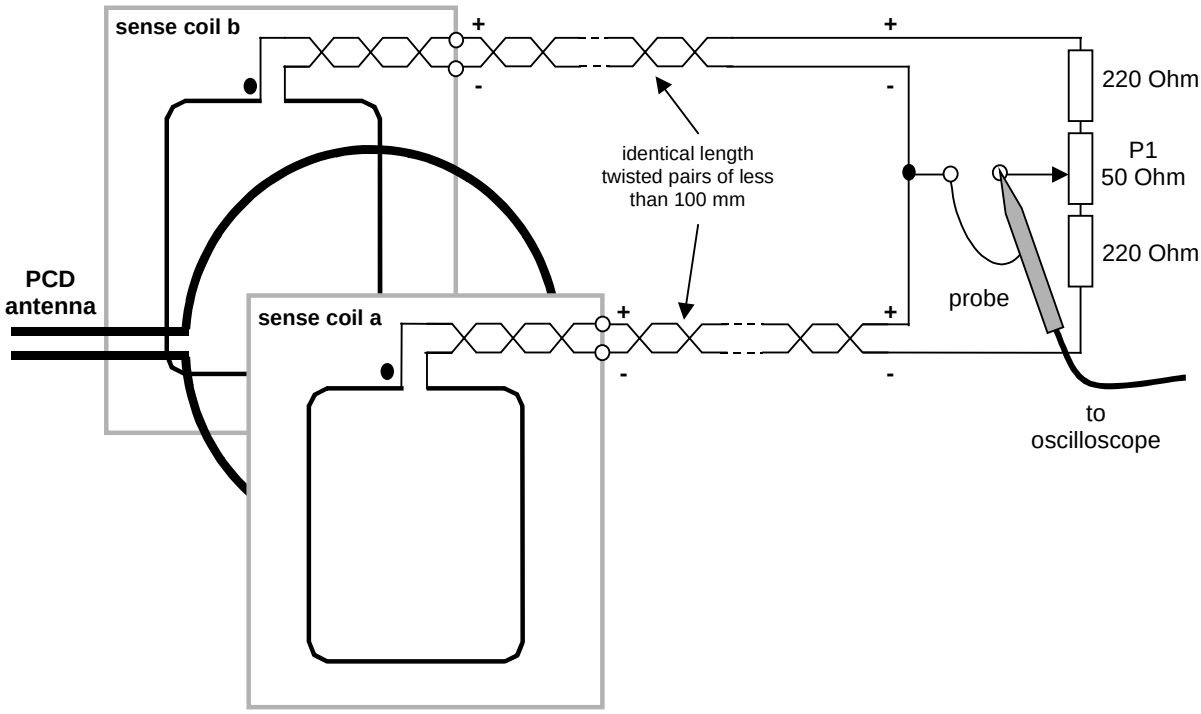

Figure 4 — Test set-up (principle)

6.2.1 Test PCD antenna

The Test PCD antenna shall have a diameter of 150 mm and its construction shall conform to the drawings in Annex A. The tuning of the antenna may be accomplished with the procedure given in Annex B.

6.2.2 Sense coils

The size of the sense coils shall be 100 mm $\times$ 70 mm. The sense coil construction shall conform to the drawings in Annex C.

© ISO/IEC 2001 – All rights reserved
Copyright International Organization for Standardization
Provided by IHS under license with ISO
No reproduction or networking permitted without license from IHS
Not for Resale

6.2.3 Assembly of Test PCD

The sense coils and Test PCD antenna shall be assembled parallel and with the sense and antenna coils coaxial and such that the distance between the active conductors is 37,5 mm as in figure 5. The distance between the coil in the DUT and the calibration coil shall be equal with respect to the coil of the test PCD antenna.

NOTE These distances are chosen to represent the typical operating distance of the PICC.

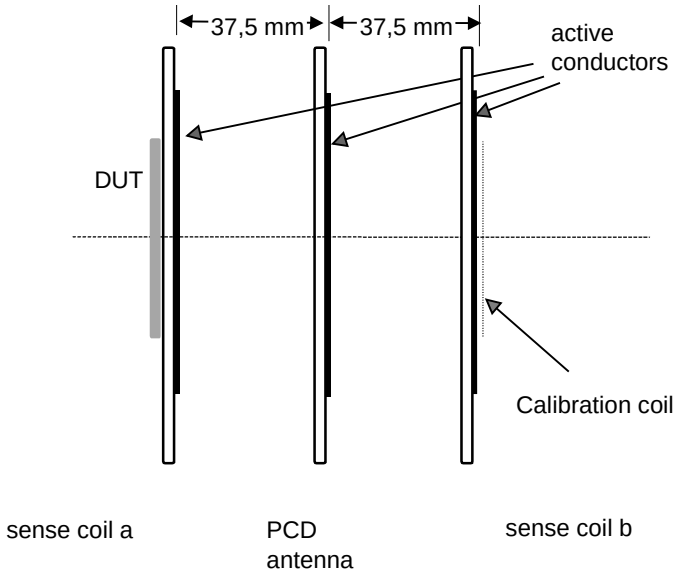

Figure 5 — Test PCD assembly

6.3 Reference PICCs

Reference PICCs are defined:

— to test H_{min} and H_{max} produced by a PCD (under conditions of loading by a PICC)

— to test the ability of a PCD to power a PICC

— to detect the minimum load modulation signal from the PICC.

6.3.1 Reference PICC for H_{min}, H_{max} and PCD power

The schematic is shown in Annex D. Resistor R1 or R2 may be selected by means of jumper J1. Resonant frequency can be adjusted with C2.

6.3.2 Reference PICC for load modulation test

The suggested schematic for the load modulation test is shown in Annex E. The load modulation can be chosen to be resistive or capacitive.

This Reference PICC is calibrated by using the Test PCD assembly as follows:

Place the Reference PICC in the position of the DUT. Measure the load modulation signal amplitude as described in 7.2. This amplitude should correspond to the minimum amplitude at values of field strength required by the base standard.

© ISO/IEC 2001 – All rights reserved

Copyright International Organization for Standardization
Provided by IHS under license with ISO
No reproduction or networking permitted without license from IHS
Not for Resale

6.3.3 Dimensions of the Reference PICCs

The Reference PICCs shall consist of an area containing the coils which has the height and width defined in ISO/IEC 7810 for ID-1 type. An area external to this, containing the circuitry which emulates the required PICC functions, shall be appended in such a way as to allow insertion into the test set-ups described below and so as to cause no interference to the tests. The dimensions shall be as in figure 6.

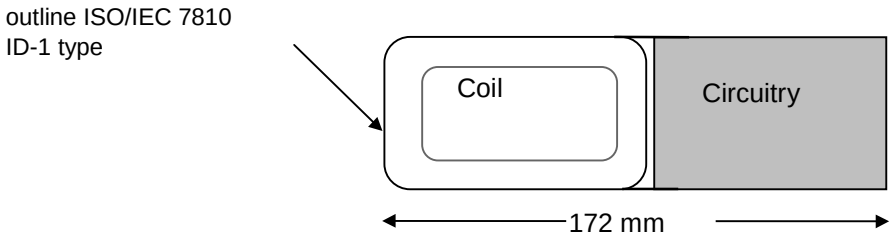

Figure 6 — Reference PICC dimensions

6.3.4 Thickness of the Reference PICCs board

The thickness of the Reference PICCs active area shall be 0,76 mm ± 10 %.

6.3.5 Coil characteristics

The coil in the active area of the Reference PICCs shall have 4 turns and shall be concentric with the area outline.
The outer size of the coils shall be 72 mm × 42 mm with a relative tolerance of ± 2 %.
The coil shall be printed on PCB plated with 35 µm copper.
Track width and spacing shall be 500 µm with a relative tolerance of ± 20 %.

6.4 Digital sampling oscilloscope

The digital sampling oscilloscope shall be capable of sampling at a rate of at least 100 million samples per second with a resolution of at least 8 bits at optimum scaling. The oscilloscope should have the capability to output the sampled data as a text file to facilitate mathematical and other operations such as windowing on the sampled data using external software programmes (see Annex F).

7 Functional test - PICC

7.1 Purpose

The purpose of this test is to determine the amplitude of the PICC load modulation signal within the operating field range [H_{min}, H_{max}] as specified in the base standard. Also the functionality of the PICC for Type A and Type B within their corresponding modulation ranges as defined in the base standard shall be determined.

7.2 Test procedure

Step 1: The load modulation test circuit of figure 4 and the Test PCD assembly of figure 5 are used.

Adjust the RF power delivered by the signal generator to the test PCD antenna to the required field strength as measured by the calibration coil. Connect the output of the load modulation test circuit of figure 4 to a digital sampling oscilloscope. The 50 Ohm potentiometer shall be trimmed to minimise the residual carrier. This signal shall be at least 40 dB lower than the signal obtained by shorting one sense coil.

--`,,```,,,,````-`-`,,`,,`,`,,`---
© ISO/IEC 2001 – All rights reserved
Copyright International Organization for Standardization
Provided by IHS under license with ISO
No reproduction or networking permitted without license from IHS
Not for Resale

Step 2: The PICC under test shall be placed in the DUT position, concentric with sense coil a**.** The RF drive into the test PCD antenna shall be re-adjusted to the required field strength.

Display a segment of at least two cycles of the waveform of the subcarrier load modulation on the digital sampling oscilloscope and store the sampled data in a file for analysis by a computer software programme (see Annex F).

NOTE Care should be taken to apply a proper synchronization method for low amplitude load modulation.

Fourier transform exactly two subcarrier cycles of the sampled modulation waveform using suitable computer software. Use a discrete Fourier transformation with a scaling such that a pure sinusoidal signal results in its peak magnitude. To minimize transient effects, avoid a subcarrier cycle immediately following a non-modulating period.

The resulting peak amplitudes of the upper and lower sidebands at $fc + fs$ and $fc - fs$ shall be above the value defined in the base standard.

A REQA or a REQB command sequence as defined in ISO/IEC 14443-3 shall be sent by the Test PCD to obtain a signal or load modulation response from the PICC.

7.3 Test report

The test report shall give the measured peak amplitudes of the upper and lower sidebands at $fc + fs$ and $fc - fs$ and the applied fields and modulations.

8 Functional test - PCD

8.1 PCD field strength

8.1.1 Purpose

This test measures the field strength produced by a PCD with its specified antenna in its operating volume as defined in accordance with the base standard. The test procedure of 8.1.2 is also used to determine that the PCD generates a field not higher than the value specified in ISO/IEC 14443-1, in any possible PICC position, by setting H to the required value in steps 1 to 3.

NOTE The test takes account of PICC loading of the PCD.

8.1.2 Test procedure

Procedure for H_{max} test:

1. Calibrate the Test PCD assembly to produce the H_{max} operating condition on the calibration coil.

2. Tune the Reference PICC (Annex D) to 19 MHz.

NOTE The resonance frequency of the Reference PICC is measured by using an impedance analyser or a LCR-meter connected to a calibration coil. The coil of the test PICC should be placed on the calibration coil as close as possible, with the axes of the two coils being congruent. The resonance frequency is that frequency at which the reactive part of the measured complex impedance is at maximum.

3. Place the Reference PICC into the DUT position on the Test PCD assembly. Switch the jumper to R2 and adjust R2 to obtain V_{DC} = 3 V (dc) across it measured with a high impedance voltmeter. Verify the operating field condition by monitoring the voltage on the calibration coil.

4. Position the Reference PICC within the defined operating volume of the PCD under test. The voltage V_{DC} measured with a high impedance voltmeter across R2 shall not exceed 3 V (dc).

© ISO/IEC 2001 – All rights reserved

Copyright International Organization for Standardization
Provided by IHS under license with ISO
No reproduction or networking permitted without license from IHS
Not for Resale

Procedure for H_{min} test:

1. Calibrate the Test PCD assembly to produce the H_{min} operating condition on the calibration coil.

2. Tune the Reference PICC (Annex D) to 13,56 MHz.

3. Place the Reference PICC into the DUT position on the Test PCD assembly. Switch the jumper to R2 and adjust R2 to obtain 3 V(dc) across it measured with a high impedance voltmeter. Verify the operating field condition by monitoring the voltage on the calibration coil.

4. Position the Reference PICC within the defined operating volume of the PCD under test. The voltage V_{DC} measured with a high impedance voltmeter across R2 shall exceed 3 V (dc).

8.1.3 Test report

The test report shall give the dc voltage measured across R2 at H_{min} and H_{max} under the conditions applied.

8.2 Power transfer PCD to PICC

8.2.1 Purpose

This test is used to determine that the PCD is able to supply a certain power to a PICC placed anywhere within the defined operating volume.

8.2.2 Test procedure

With the jumper set to R1 place the Reference PICC (Annex D) into the field with the resonance frequency of the PICC tuned to 19 MHz. Measure the voltage across R1 with a high impedance voltmeter and it shall exceed 3V (dc) within the defined operating volume.

8.2.3 Test report

The test report shall give the dc voltage measured across R1 within the defined operating volume under the defined conditions.

8.3 Modulation index and waveform

8.3.1 Purpose

This test is used to determine the index of modulation of the PCD field as well as the rise and fall times and the overshoot values as defined in ISO/IEC 14443-2.

8.3.2 Test procedure

Position the calibration coil at all positions in the defined operating volume, and determine the modulation index and waveform characteristics from the induced voltage on the coil displayed on a suitable oscilloscope.

8.3.3 Test report

The test report shall give the measured modulation index of the PCD field, the rise and fall times and overshoot values, within the defined operating volume.

© ISO/IEC 2001 – All rights reserved
Copyright International Organization for Standardization
Provided by IHS under license with ISO
No reproduction or networking permitted without license from IHS
Not for Resale

8.4 Load modulation reception (informative only)

8.4.1 Purpose

This test may be used to verify that a PCD correctly detects the load modulation of a PICC which conforms to the base standard. It is supposed that the PCD has means to indicate correct reception of the subcarrier produced by a PICC.

8.4.2 Test procedure

Annex E describes a Reference PICC and calibration procedure which allows the sensitivity of a PCD to load modulation to be assessed. This Reference PICC does not emulate the shunt action of all types of PICC, therefore it shall be calibrated at a given field strength *H* in the Test PCD assembly corresponding to the same value of *H* in which it is to be placed in the PCD field. The latter value of *H* may be measured with the calibration coil.

© ISO/IEC 2001 – All rights reserved

Copyright International Organization for Standardization
Provided by IHS under license with ISO
No reproduction or networking permitted without license from IHS
Not for Resale

Annex A
(normative)

Test PCD Antenna

A.1 Test PCD Antenna layout including impedance matching network

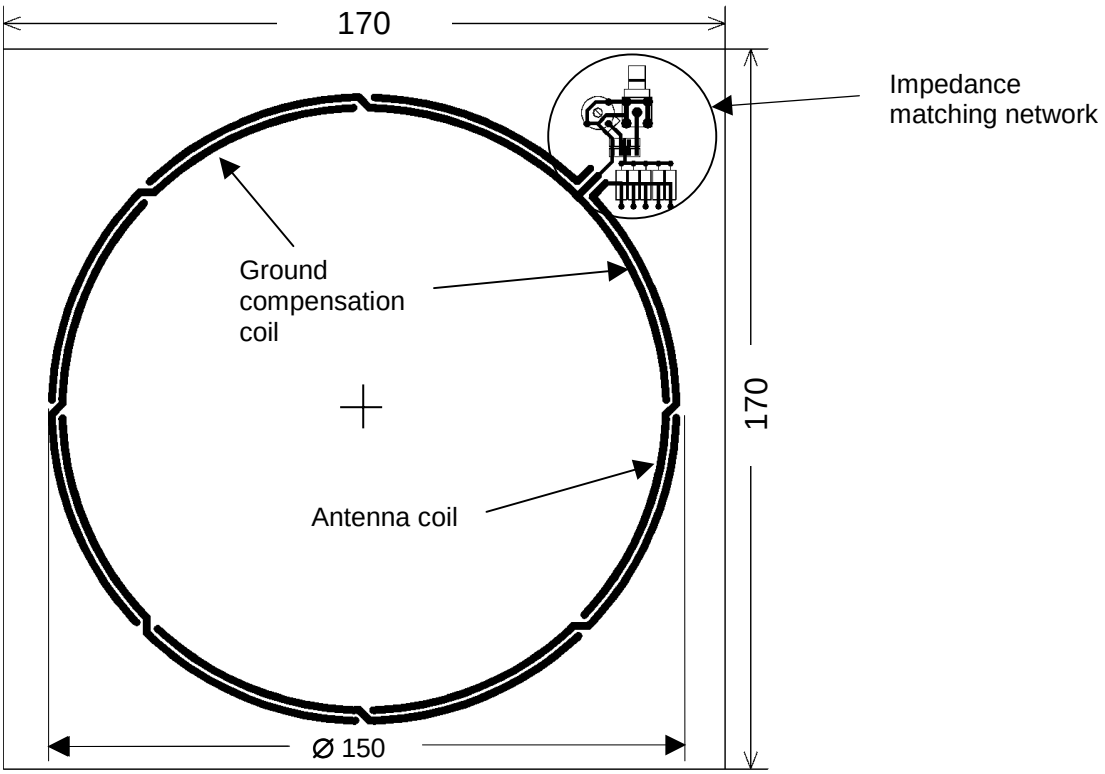

Dimensions in millimetres (Drawings are not to scale).
The antenna coil track width is 1,8 mm (except for through-plated holes).
Starting from the impedance matching network there are crossovers every 45°.
PCB: FR4 material thickness 1,6 mm, double sided with 35 µm copper.

Figure A.1 — Test PCD antenna layout including impedance matching network (View from front)

© ISO/IEC 2001 – All rights reserved
Copyright International Organization for Standardization
Provided by IHS under license with ISO
No reproduction or networking permitted without license from IHS
Not for Resale

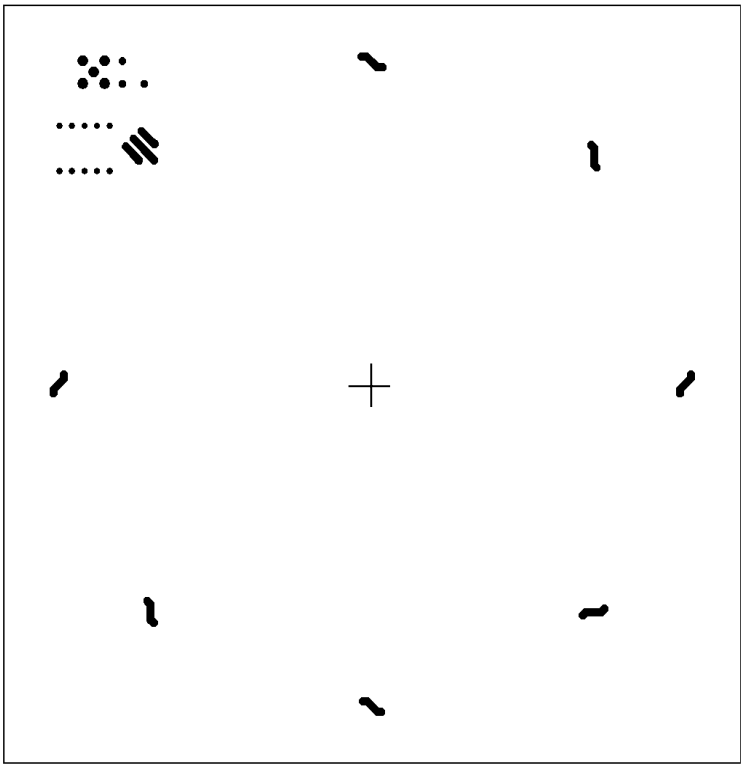

Figure A.2 — PCD Antenna Layout (View from back)

NOTE PCBs and/or Layout may be made available by:

arsenal research
MIFARE® Certification Institute
Faradaygasse 3
A-1030 Vienna
Austria
Phone: +43 50 550-6525
Fax: +43 1 799 19 55
mci@arsenal.ac.at

© ISO/IEC 2001 – All rights reserved

Copyright International Organization for Standardization
Provided by IHS under license with ISO
No reproduction or networking permitted without license from IHS
Not for Resale

A.2 Impedance matching network

The antenna impedance (R_{ant}, L_{ant}) is adapted to the signal generator output impedance (Z=50 Ohm) by a matching circuit (see below). The capacitors C1, C2 and C3 have fixed values. The input impedance phase can be adjusted with the variable capacitor C4.

NOTE 1 Care has to be taken to keep maximum voltages and maximum power dissipation within the specified limits of the individual components.

NOTE 2 The linear low distortion variable output 50 Ohm power driver should be capable of emitting Type A and Type B modulations for transmission of REQA/B. For Type B the modulation index should be adjustable in the range of 8 % - 14 %. The output power should be adjustable to deliver H fields in the range of 1,5 A/m – 12 A/m. Care should be taken with the duration of fields above the upper operating range of 7,5 A/m.

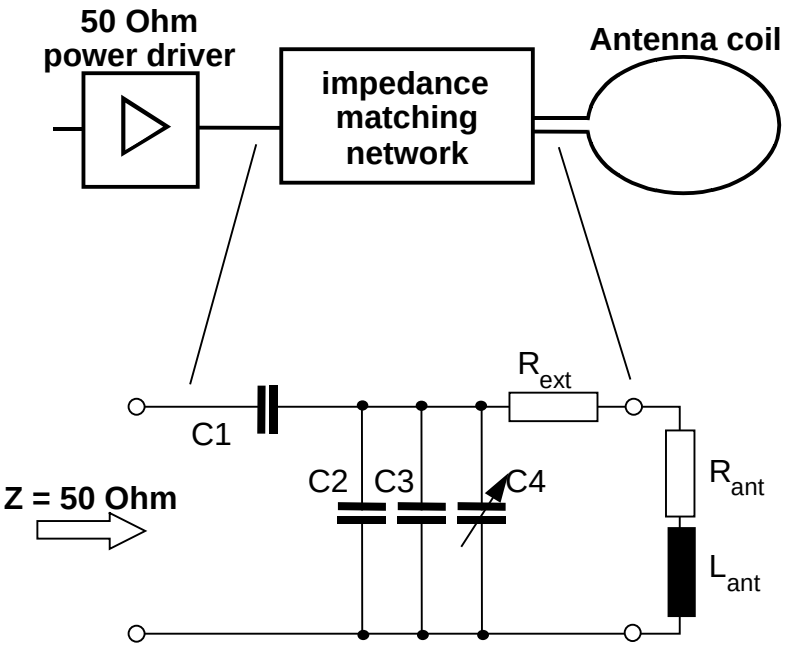

Component Table:

	Value	Unit
C1	47	pF
C2	180	pF
C3	33	pF
C4	2-27	pF
Rext	5x4.7 (parallel)	Ohm

Figure A.3 — Impedance matching network

© ISO/IEC 2001 – All rights reserved
Copyright International Organization for Standardization
Provided by IHS under license with ISO
No reproduction or networking permitted without license from IHS
Not for Resale

Annex B
(informative)

Test PCD Antenna tuning

The figures below show the two steps of a simple phase tuning procedure to match the impedance of the antenna to that of the driving generator. After the two steps of the tuning procedure the signal generator shall be directly connected to the antenna output for the tests.

Step 1:

A high precision resistor of 50 Ohm ± 1 % (e.g. 50 Ohm BNC resistor) is inserted in the signal line between the signal generator output and an antenna connector. The two probes of the oscilloscope are connected to both sides of the serial reference resistor. The oscilloscope displays a Lissajous figure when it is set in Y to X presentation. The signal generator is set to:

— Wave form: Sinusoidal

— Frequency: 13,56 MHz

— Amplitude: 2V (rms) - 5V (rms)

The output is terminated with a second high precision resistor of 50 Ohm ± 1 % (e.g. 50 Ohm BNC terminating resistor). The probe, which is in parallel to the output connector has a small parasitic capacitance C_{probe}. A calibration capacitance C_{cal} in parallel to the reference resistor compensates this probe capacitor if $C_{cal} = C_{probe}$. The probe capacitor is compensated when the Lissajous figure is completely closed.

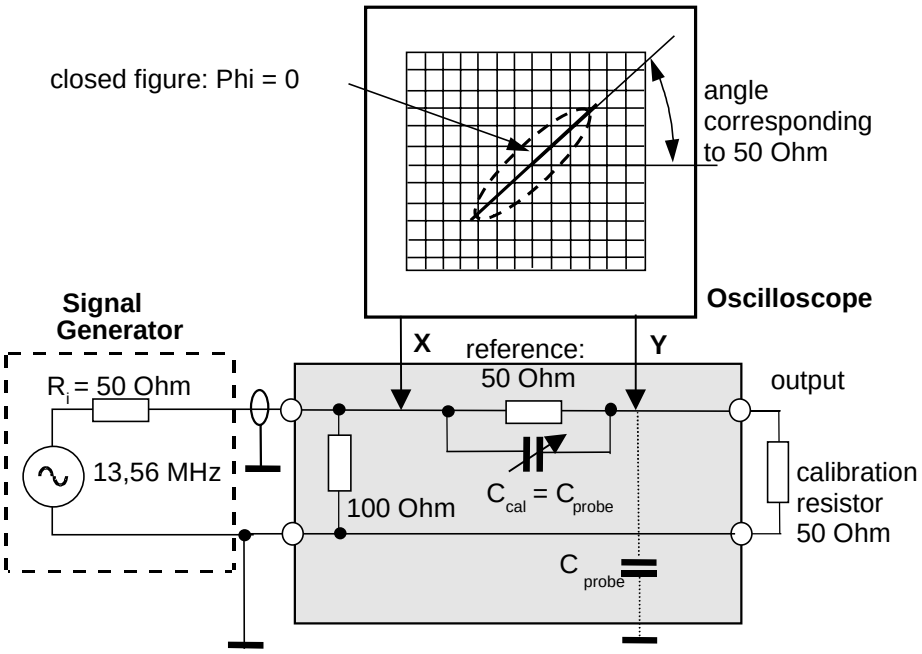

Figure B.1 — Calibration set-up (Step 1)

NOTE The ground cable has to be run close to the probe to avoid induced voltages caused by the magnetic field.

© ISO/IEC 2001 – All rights reserved

Copyright International Organization for Standardization
Provided by IHS under license with ISO
No reproduction or networking permitted without license from IHS
Not for Resale

Step 2:

Using the same values as set for step 1, in the second step the matching circuitry is connected to the antenna output. The capacitor C4 on the antenna board is used to tune the phase to zero.

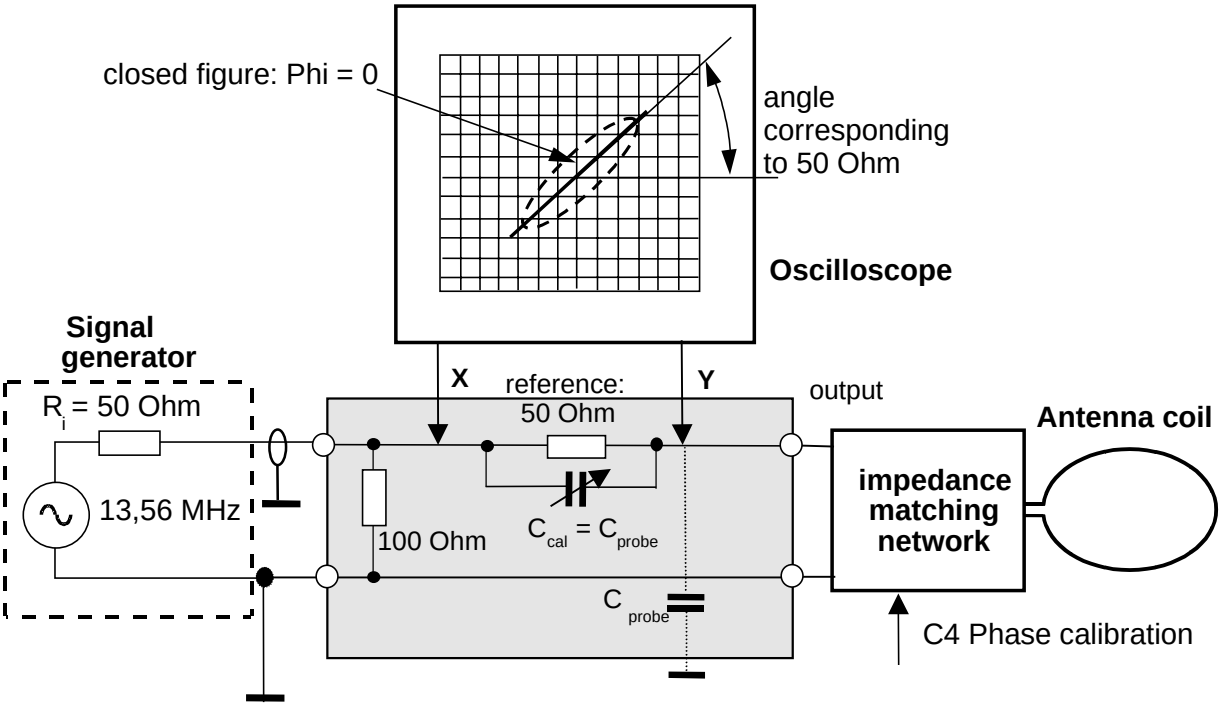

Figure B.2 — Calibration set-up (Step 2)

© ISO/IEC 2001 – All rights reserved
Copyright International Organization for Standardization
Provided by IHS under license with ISO
No reproduction or networking permitted without license from IHS
Not for Resale

Annex C
(normative)

Sense coil

C.1 Sense coil layout

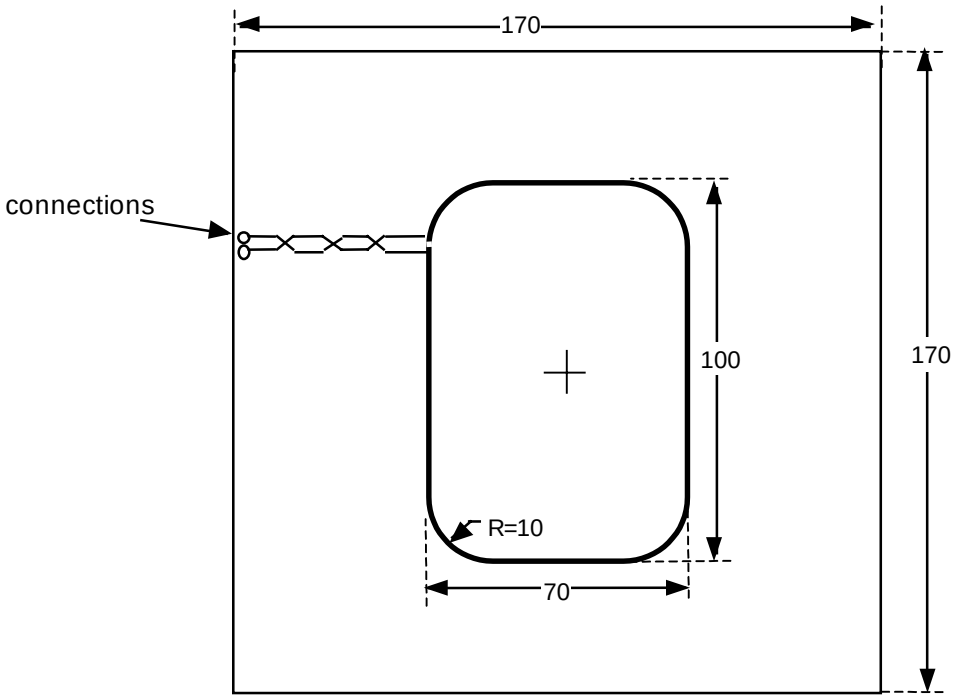

Dimensions in millimetres (Drawings are not to scale).
The sense coil track width is 0,5 mm with relative tolerance ± 20 % (except for through-plated holes). Size of the coils refers to the outer dimensions.
PCB: FR4 material thickness 1,6 mm, double sided with 35 µm copper.

Figure C.1 — Layout for sense coils a and b

NOTE PCBs and/or Layout may be made available by:

arsenal research
MIFARE® Certification Institute
Faradaygasse 3
A-1030 Vienna
Austria
Phone: +43 50 550-6525
Fax: +43 1 799 19 55
mci@arsenal.ac.at

--`,,```,,,,````-`-`,,`,,`,`,,`---

© ISO/IEC 2001 – All rights reserved

Copyright International Organization for Standardization
Provided by IHS under license with ISO
No reproduction or networking permitted without license from IHS
Not for Resale

C.2 Sense coil assembly

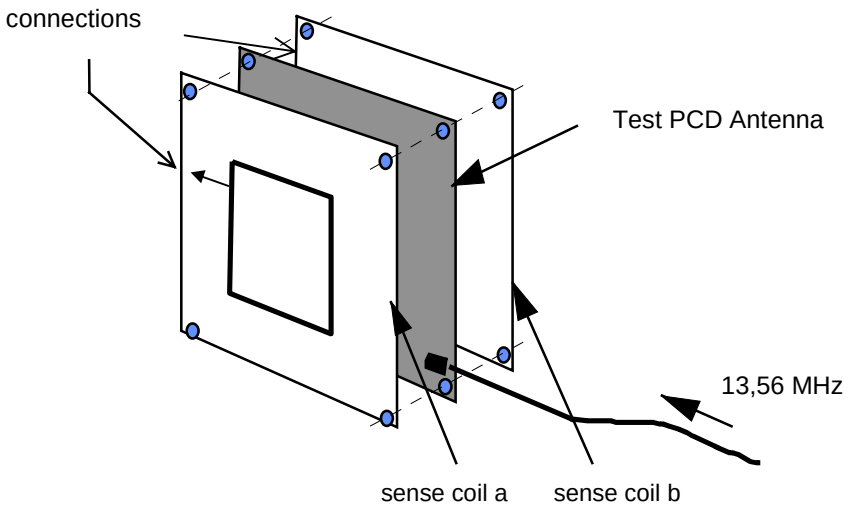

Figure C.2 — Sense coil assembly

© ISO/IEC 2001 – All rights reserved
Copyright International Organization for Standardization
Provided by IHS under license with ISO
No reproduction or networking permitted without license from IHS
Not for Resale

Annex D
(normative)

Reference PICC for field and power measurements

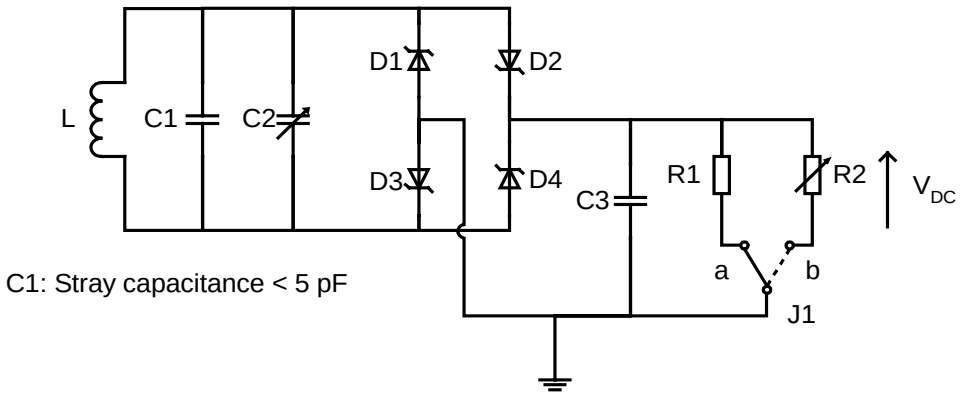

Component	Value
L (coil)	see 6.3.5
C1	Stray capacitance < 5 pF
C2	6-60 pF
C3	10 nF
D1, D2, D3, D4	see characteristics in table D.1 (BAR 43 or equivalent)
R1	1,8 kOhm
R2	0 - 5 kOhm

Figure D.1 — Circuit diagram for Reference PICC

Table D.1 — Specification of basic characteristics of D1, D2, D3, D4

Symbol	Test Condition at Tj = 25 °C	Typ.	Max.	Unit
V_F	I_F = 2 mA		0,33	V
C	V_R = 1 V, F=1 MHz	7		pF
t_{rr}	I_F = 10 mA, I_R = 10 mA, I_{rr} = 1 mA		5	ns

V_F Forward voltage drop
V_R Reverse voltage
I_F Forward current
I_R Reverse current
t_{rr} Reverse recovery time
I_{rr} Reverse recovery current
Tj Junction temperature
F Frequency
C Junction capacitance

--`,,```,,,,````-`-`,,`,,`,`,,`---

© ISO/IEC 2001 – All rights reserved

Copyright International Organization for Standardization
Provided by IHS under license with ISO
No reproduction or networking permitted without license from IHS
Not for Resale

Annex E
(informative)

Reference PICC for load modulation test

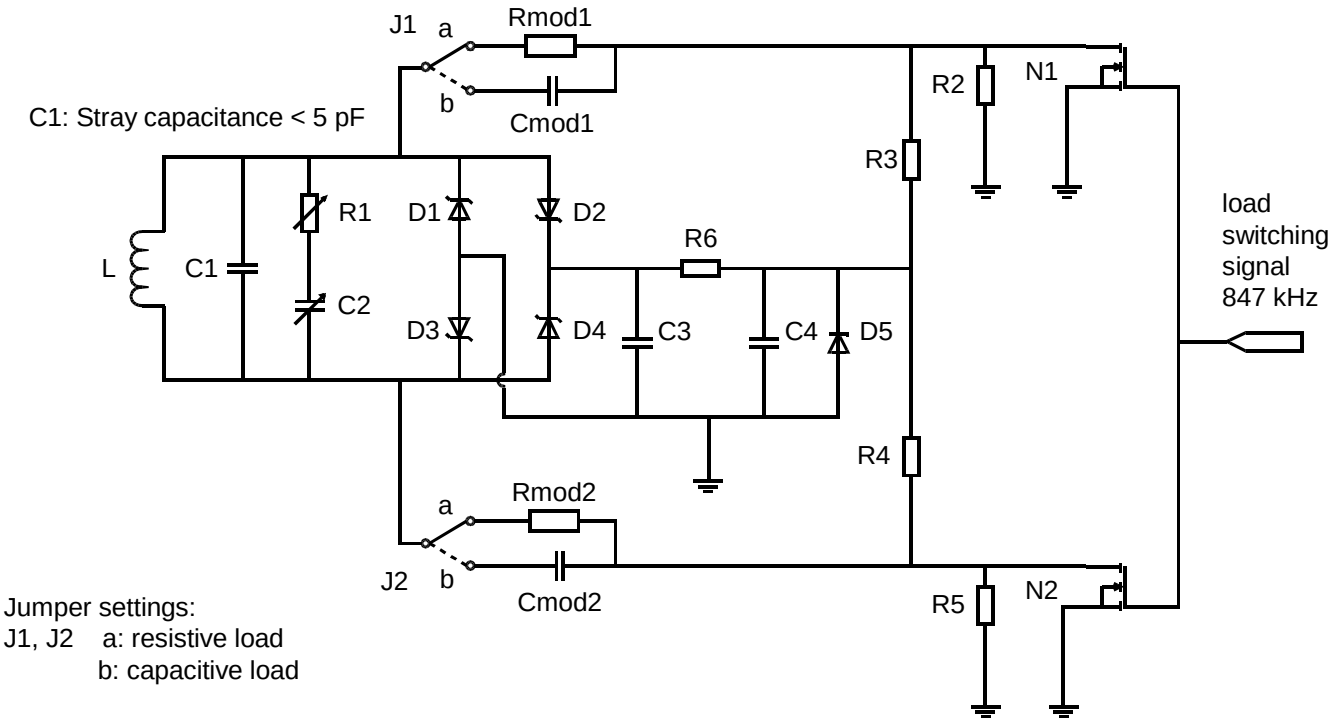

Adjust following components for required emulation:

Component	Function	Value
R1	adjust Q	0 –10 Ohm
C2	adjust resonance	as required
Cmod1, Cmod2	capacitive modulation	between 3,3 pF and 10 pF
Rmod1, Rmod2	resistive modulation	between 400 Ohm and 12 kOhm
R6	shunt current	between 10 Ohm and 5 kOhm
D5	shunt voltage	between 2,7 V and 15 V

Components (fixed) list:

Component	Value
R2, R3, R4, R5	1 MOhm
D1, D2, D3, D4	as defined in Annex D, table D.1
L	see 6.3.5
C1	Stray capacitance < 5 pF
C2	6-60 pF
C3	100 pF
C4	10 nF
N1, N2	N-MOS transistor; 10 pF max output capacitance to ground

Figure E.1 — Circuit diagram for Reference PICC for load modulation test

Copyright International Organization for Standardization
Provided by IHS under license with ISO
No reproduction or networking permitted without license from IHS
Not for Resale
© ISO/IEC 2001 – All rights reserved

Annex F
(informative)

Program for the evaluation of the spectrum

The following program written in C language gives an example for the calculation of the magnitude of the spectrum from the PICC.

```
/*************************************************************/
/***  This program calculates the fourier coefficients       ***/
/***  of load modulated voltage of a PICC according          ***/
/***  the ISO/IEC 10373-6 Test methods                       ***/
/***  The coefficient are calculated for the frequencies:    ***/
/***    Carrier:        13.5600 MHz                          ***/
/***    Upper sideband: 14.4075 MHz                          ***/
/***    Lower sideband: 12.7125 MHz                          ***/
/*************************************************************/
/*** Input:                                                  ***/
/***  File in CSV Format containing a table of two           ***/
/***  columns (time and test PCD output voltage vd, clause 7)***/
/***                                                         ***/
/***  data format of input-file:                             ***/
/***  -------------------------                              ***/
/***  - one data-point per line:                             ***/
/***     {time[seconds], sense-coil-voltage[volts])          ***/
/***  - contents in ASCII, no headers                        ***/
/***  - data-points shall be equidistant time                ***/
/***  - minimum sampling rate: 100 MSamples/second           ***/
/***  - modulation waveform centred                          ***/
/***      (max. tolerance: half of subcarrier cycle)         ***/
/***                                                         ***/
/***    "screen-shot of centred modulation-waveform          ***/
/***     with 4 subcarrier cycles":                          ***/
/***                                                         ***/
/***   XXXXXXXXX    xxxx    xxxx    xxxx    xxxxXXXXXXXXX  ***/
/***   XXXXXXXXX    xxxx    xxxx    xxxx    xxxxXXXXXXXXX  ***/
/***   XXXXXXXXXxxxxxxxxxxxxxxxxxxxxxxxxxxxxxxxXXXXXXXXX  ***/
/***   XXXXXXXXXxxxxxxxxxxxxxxxxxxxxxxxxxxxxxxxXXXXXXXXX  ***/
/***   XXXXXXXXXxxxxxxxxxxxxxxxxxxxxxxxxxxxxxxxXXXXXXXXX  ***/
/***   XXXXXXXXXxxxxxxxxxxxxxxxxxxxxxxxxxxxxxxxXXXXXXXXX  ***/
/***   XXXXXXXXX    xxxx    xxxx    xxxx    xxxxXXXXXXXXX  ***/
/***   XXXXXXXXX    xxxx    xxxx    xxxx    xxxxXXXXXXXXX  ***/
/***   |-----------------------cc-----------------------|  ***/
/***                                                         ***/
/***  example for spreadsheet file (start in next line):     ***/
/***   (time)      (voltage)                                 ***/
/***  3.00000e-06,1.00                                       ***/
/***  3.00200e-06,1.01                                       ***/
/***  .....                                                  ***/
/*************************************************************/
/*** RUN:                                                    ***/
/***  Modtst [filename1[.csv] ... filename[.csv] ]           ***/
/*************************************************************/
#include <stdio.h>
#include <conio.h>
#include <string.h>
#include <math.h>
#define MAX_SAMPLES 5000

float  pi;   /* pi=3.14.... */

/* Array for time and sense coil voltage vd */
float vtime[MAX_SAMPLES]; /* time array                      */
```

© ISO/IEC 2001 – All rights reserved
Copyright International Organization for Standardization
Provided by IHS under license with ISO
No reproduction or networking permitted without license from IHS
Not for Resale

```
float vd[MAX_SAMPLES];    /* Array for different coil voltage */

/*************************************************************/
/***    Read CSV File  Function                            ***/
/***                                                       ***/
/***    Description:                                       ***/
/***    This function reads the table of time and sense coil ***/
/***    voltage from a File in CSV Format                  ***/
/***                                                       ***/
/***    Input: filename                                    ***/
/***                                                       ***/
/***    Return: Number of samples  (sample Count)          ***/
/***            0  if an error occurred                    ***/
/***                                                       ***/
/***    Displays Statistics:                               ***/
/***                                                       ***/
/***    Filename, SampleCount, Sample rate, Max/Min Voltage  ***/
/*************************************************************/

int readcsv(char* fname)
{
   float a,b;
   float max_vd,min_vd;
   int i;
   FILE     *sample_file;

   /************ Open File **********************************/
   if (!strchr(fname, '.'))   strcat(fname, ".csv");

   if ((sample_file = fopen(fname, "r"))== NULL)
      {
            printf("Cannot open input file %s.\n",fname);
            return 0;
      }
   /*************************************************************/
   /* Read CSV File                                             */
   /*************************************************************/
   max_vd=-1e-9F;
   min_vd=-max_vd;
   i=0;

   while (!feof(sample_file))
      {
      if (i>=MAX_SAMPLES)
        {
        printf("Warning: File truncated !!!\n");
        printf("To much samples in file %s\b\n",fname);
        break;
        }
      fscanf(sample_file,"%f,%f\n", &a, &b);
      vtime[i] = a;
      vd[i] = b;
      if (vd[i]>max_vd) max_vd=vd[i];
      if (vd[i]<min_vd) min_vd=vd[i];
      i++;
      }
   fclose(sample_file);

   /************ Displays Statistics  ***********************/
   printf("\n*************************************************\n");

   printf("\nStatistics: \n");
   printf(" Filename    : %s\n",fname);
   printf(" Sample count: %d\n",i);
   printf(" Sample rate : %1.0f MHz\n",1e-6/(vtime[1]-vtime[0]));
   printf(" Max(vd)     : %4.0f mV\n",max_vd*1000);
   printf(" Min(vd)     : %4.0f mV\n",min_vd*1000);
   return i;
}/*************** End ReadCsv **************/
```


--`,,```,,,,````-`-,,`,,`,`,,`---
Copyright International Organization for Standardization
Provided by IHS under license with ISO
No reproduction or networking permitted without license from IHS
© ISO/IEC 2001 – All rights reserved
Not for Resale

```
/*************************************************************/
/***    DFT : Discrete Fourier Transformation              ***/
/*************************************************************/
/***    Description:                                       ***/
/***    This function calculate the Fourier coefficient    ***/
/***                                                       ***/
/***    Input: Number of samples                           ***/
/***    Global Variables:                                  ***/
/***                                                       ***/
/***    Displays Results:                                  ***/
/***                                                       ***/
/***     Carrier coefficient                               ***/
/***     Upper sideband coefficient                        ***/
/***     Lower sideband coefficient                        ***/
/***                                                       ***/
/*************************************************************/
void dft(int count)
{
   float c0_real,c0_imag,c0_abs,c0_phase;
   float c1_real,c1_imag,c1_abs,c1_phase;
   float c2_real,c2_imag,c2_abs,c2_phase;
   int   N_data,center,start,end;
   float w0,wu,wl;

   int i;

   w0=(float)(13.56e6*2.0)*pi;  /* carrier        13.56 MHz */
   wu=(float)(1.0+1.0/16.0)*w0; /* upper sideband 14.41 MHz */
   wl=(float)(1.0-1.0/16.0)*w0; /* lower sideband 12.71 MHz */

   c0_real=0; /* real part of the carrier fourier coefficient */
   c0_imag=0; /* imag part of the carrier fourier coefficient */
   c1_real=0; /* real part of the up. sideband fourier coefficient */
   c1_imag=0; /* imag part of the up. sideband fourier coefficient */
   c2_real=0; /* real part of the lo. sideband fourier coefficient */
   c2_imag=0; /* imag part of the lo. sideband fourier coefficient */

   center=(count+1)/2; /*  center address */

   /********** signal selection  ****************************/

   /*   Number of samples for two subcarrier periods  */

   N_data=(int)(0.5+16.0F/(vtime[2]-vtime[1])/13.56e6F);
          /* Note: (vtime[2]-vtime[1]) are the scope sample rate */

   start=center-N_data;
   end=center+N_data-1;

   /******************    DFT *********************************/
   for( i=start;i<=end;i++)
      {
      c0_real=c0_real+vd[i]*(float)cos(w0*vtime[i]);
      c0_imag=c0_imag+vd[i]*(float)sin(w0*vtime[i]);
      c1_real=c1_real+vd[i]*(float)cos(wu*vtime[i]);
      c1_imag=c1_imag+vd[i]*(float)sin(wu*vtime[i]);
      c2_real=c2_real+vd[i]*(float)cos(wl*vtime[i]);
      c2_imag=c2_imag+vd[i]*(float)sin(wl*vtime[i]);
      }

   /******************    DFT scale ***************************/
   c0_real=2.0F*c0_real/(float)(2*N_data);
   c0_imag=2.0F*c0_imag/(float)(2*N_data);
   c1_real=2.0F*c1_real/(float)(2*N_data);
   c1_imag=2.0F*c1_imag/(float)(2*N_data);
   c2_real=2.0F*c2_real/(float)(2*N_data);
   c2_imag=2.0F*c2_imag/(float)(2*N_data);
```

© ISO/IEC 2001 – All rights reserved
Copyright International Organization for Standardization
Provided by IHS under license with ISO
No reproduction or networking permitted without license from IHS
Not for Resale

```
   /*************** absolute fourier coefficient     **********/
   c0_abs=(float)sqrt(c0_real*c0_real + c0_imag*c0_imag);
   c1_abs=(float)sqrt(c1_real*c1_real + c1_imag*c1_imag);
   c2_abs=(float)sqrt(c2_real*c2_real+c2_imag*c2_imag);

   /**************    Phase of fourier coefficient    **********/
   c0_phase=(float)atan2(c0_imag,c0_real);
   c1_phase=(float)atan2(c1_imag,c1_real);
   c2_phase=(float)atan2(c2_imag,c2_real);

   /**************  Result Display    ************************/
   printf("\n\nResults: \n");

   printf("Carrier        ");
   printf("Abs: %7.3fmV  ",1000*c0_abs);
   printf("Phase: %3.0fdeg\n",c0_phase/pi*180);

   printf("Upper sideband ");
   printf("Abs: %7.3fmV  ",1000*c1_abs);
   printf("Phase: %3.0fdeg\n",c1_phase/pi*180);

   printf("Lower sideband ");
   printf("Abs: %7.3fmV  ",1000*c2_abs);
   printf("Phase: %3.0fdeg\n\n",c2_phase/pi*180);
   printf("\n*********************************************\n");
   return;
}/*************** End DFT **************/


/*************************************************************/
/***    MAIN  Program                                      ***/
/*************************************************************/
int main(unsigned short paramCount,char *paramList[])
{
   char fname[256];
   unsigned int  i,sample_count;
   pi = (float)atan(1)*4; /* calculate pi */

   printf("\n*********************************************\n");
   printf("\n****  ISO/IEC 10373-6 PICC Test-Program    ****\n");
   printf("\n****  Version: 1.1     JUL 2000            ****\n");
   printf("\n*********************************************\n");
   /************* No Input Parameter           ****************/
   if (paramCount==1)
      {
      printf("\nCSV File name :");
      scanf("%s",fname);
      if (!strchr(fname, '.'))   strcat(fname, ".csv");
      if (!(sample_count=readcsv(fname))) return;

      dft(sample_count);
      }
   else
      {
      /************* Input Parameter Loop     ****************/
      for (i=1;i<paramCount;i++)
         {
         strcpy(fname,paramList[i]);

         if (!strchr(fname, '.'))   strcat(fname, ".csv");
         if (!(sample_count=readcsv(fname))) break;
         dft(sample_count);
         }
      }
   return;
}/********************** End Main ***********************/
```


© ISO/IEC 2001 – All rights reserved
Copyright International Organization for Standardization
Provided by IHS under license with ISO
No reproduction or networking permitted without license from IHS
Not for Resale

--`,,```,,,,````-`-`,,`,,`,`,,`---

Copyright International Organization for Standardization
Provided by IHS under license with ISO
No reproduction or networking permitted without license from IHS

Not for Resale

ICS 35.240.15

Price based on 24 pages

© ISO/IEC 2001 – All rights reserved

--`,,```,,,,````-`-`,,`,,`,`,,`---

Copyright International Organization for Standardization
Provided by IHS under license with ISO
No reproduction or networking permitted without license from IHS

Not for Resale