INTERNATIONAL STANDARD

ISO/IEC 10373-3

First edition
2001-02-15

Identification cards — Test methods —

Part 3: Integrated circuit(s) cards with contacts and related interface devices

Cartes d'identification — Méthodes d'essai —

Partie 3: Cartes à circuit(s) intégré(s) à contacts et dispositifs d'interface assimilés

Reference number
ISO/IEC 10373-3:2001(E)

© ISO/IEC 2001

--`,,```,,,,````-`-`,,`,,`,`,,`---

Copyright International Organization for Standardization
Provided by IHS under license with ISO
No reproduction or networking permitted without license from IHS

Not for Resale

PDF disclaimer

This PDF file may contain embedded typefaces. In accordance with Adobe's licensing policy, this file may be printed or viewed but shall not be edited unless the typefaces which are embedded are licensed to and installed on the computer performing the editing. In downloading this file, parties accept therein the responsibility of not infringing Adobe's licensing policy. The ISO Central Secretariat accepts no liability in this area.

Adobe is a trademark of Adobe Systems Incorporated.

Details of the software products used to create this PDF file can be found in the General Info relative to the file; the PDF-creation parameters were optimized for printing. Every care has been taken to ensure that the file is suitable for use by ISO member bodies. In the unlikely event that a problem relating to it is found, please inform the Central Secretariat at the address given below.

© ISO/IEC 2001

All rights reserved. Unless otherwise specified, no part of this publication may be reproduced or utilized in any form or by any means, electronic or mechanical, including photocopying and microfilm, without permission in writing from either ISO at the address below or ISO's member body in the country of the requester.

ISO copyright office
Case postale 56 • CH-1211 Geneva 20
Tel. + 41 22 749 01 11
Fax + 41 22 749 09 47
E-mail copyright@iso.ch
Web www.iso.ch

Printed in Switzerland

Copyright International Organization for Standardization
Provided by IHS under license with ISO
No reproduction or networking permitted without license from IHS

© ISO/IEC 2001 – All rights reserved

Not for Resale

Contents

Foreword vi

1 Scope 1

2 Normative references 1

3 Terms and definitions 2

4 General items applicable to the test methods 3
4.1 Test environment 3
4.2 Pre-conditioning 3
4.3 Default tolerance 3
4.4 Total measurement uncertainty 3
4.5 Conventions for electrical measurements 3
4.6 Apparatus 3
4.6.1 Default ICC-holder, reference axes and default measurement position 3
4.6.2 Apparatus for testing the integrated circuit(s) cards with contacts (ICC-test-apparatus) 5
4.6.3 Apparatus for testing the interface device (IFD-test-apparatus) 11
4.6.4 Test Scenario 17
4.7 Relationship of test methods versus base standard requirements 17

5 Test methods for physical characteristics of ICCs with contacts 21
5.1 Dimension and Location of Contacts 21
5.1.1 Apparatus 21
5.1.2 Procedure 21
5.1.3 Test report 22
5.2 Static electricity 22
5.2.1 Test Report 22
5.3 Electrical surface resistance of contacts 22
5.3.1 Apparatus 22
5.3.2 Procedure 23
5.3.3 Test report 23
5.3.4 Preliminary requirement 23
5.4 Surface profile of contacts 24
5.4.1 Apparatus 24
5.4.2 Procedure 24
5.4.3 Test report 25

6 Test methods for electrical characteristics of ICCs with contacts 25
6.1 VCC contact 25
6.1.1 Apparatus 25
6.1.2 Procedure 25
6.1.3 Test report 26
6.2 I/O contact 27
6.2.1 Apparatus 27
6.2.2 Procedure 27
6.2.3 Test report 29
6.3 CLK contact 29
6.3.1 Apparatus 29
6.3.2 Procedure 29
6.3.3 Test report 31
6.4 RST contact 31
6.4.1 Apparatus 31
6.4.2 Procedure 31
6.4.3 Test report 32

--`,,```,,,,````-`-`,,`,,`,`,,`---
© ISO/IEC 2001 – All rights reserved
Copyright International Organization for Standardization
Provided by IHS under license with ISO
No reproduction or networking permitted without license from IHS
Not for Resale

6.5 VPP contact 32

7 Test methods for logical operations of ICCs with contacts 33
7.1 Answer to Reset (ATR) 33
7.1.1 Cold Reset and Answer-to-Reset (ATR) 33
7.1.2 Warm Reset 33
7.1.3 Selection of the operation class A 34
7.2 T=0 Protocol 35
7.2.1 I/O transmission timing for T=0 protocol 35
7.2.2 I/O character repetition for T=0 protocol 36
7.2.3 I/O reception timing and error signaling for T=0 protocol 37
7.3 T=1 Protocol 38
7.3.1 I/O transmission timing for T=1 protocol 38
7.3.2 I/O reception timing for T=1 protocol 39
7.3.3 ICC Character Waiting Time (CWT) behavior 41
7.3.4 ICC-reaction to IFD exceeding character waiting time (CWT) 41
7.3.5 Block Guardtime (BGT) 42
7.3.6 Block sequencing by the ICC 43
7.3.7 Reactions of the ICC to protocol errors 45
7.3.8 Recovery of a transmission error by the ICC 46
7.3.9 Resynchronization 47
7.3.10 IFSD negotiation 48
7.3.11 Abortion by the IFD 49

8 Test methods for physical and electrical characteristics of the IFD 50
8.1 Activation of contacts 50
8.1.1 Apparatus 50
8.1.2 Procedure 50
8.1.3 Test report 51
8.2 VCC contact 51
8.2.1 Apparatus 51
8.2.2 Procedure 51
8.2.3 Test report 53
8.3 I/O contact 53
8.3.1 Apparatus 53
8.3.2 Procedure 53
8.3.3 Test report 55
8.4 CLK contact 55
8.4.1 Apparatus 56
8.4.2 Procedure 56
8.4.3 Test report 58
8.5 RST contact 58
8.5.1 Apparatus 58
8.5.2 Procedure 58
8.5.3 Test report 59
8.6 VPP contact 59
8.7 Deactivation of the contacts 59
8.7.1 Apparatus 60
8.7.2 Procedure 60
8.7.3 Test report 60

9 Test methods for logical operations of the IFD 60
9.1 Answer to Reset (ATR) 60
9.1.1 ICC Reset (cold reset) 60
9.1.2 ICC Reset (warm reset) 61
9.2 T=0 Protocol 61
9.2.1 I/O transmission timing for T=0 protocol 61
9.2.2 I/O character repetition for T=0 protocol 62
9.2.3 I/O reception timing and error signaling for T=0 protocol 63
9.3 T=1 Protocol 65
9.3.1 I/O transmission timing for T=1 protocol 65

Copyright International Organization for Standardization
Provided by IHS under license with ISO
No reproduction or networking permitted without license from IHS
Not for Resale
© ISO/IEC 2001 – All rights reserved

9.3.2 I/O reception timing for T=1 protocol 66
9.3.3 IFD Character Waiting Time (CWT) behavior 67
9.3.4 IFD-reaction to ICC exceeding CWT 68
9.3.5 Block Guardtime (BGT) 68
9.3.6 Block sequencing by the IFD 69
9.3.7 Recovery of a transmission error by the IFD 73
9.3.8 IFSC negotiation 73
9.3.9 Abortion by the ICC 74

Annex A (informative) **Additional Test Methods 76**
A.1 ICC — Mechanical strength: 3 wheel test 76
A.1.1 Apparatus 76
A.1.2 Method 78
A.1.3 Test Report 79
A.2 IFD — Reaction of the IFD to invalid PCBs 79
A.2.1 Apparatus 79
A.2.2 Procedure 79
A.2.3 Test report 80

© ISO/IEC 2001 – All rights reserved

Copyright International Organization for Standardization
Provided by IHS under license with ISO
No reproduction or networking permitted without license from IHS
Not for Resale

Foreword

ISO (the International Organization for Standardization) and IEC (the International Electrotechnical Commission) form the specialized system for worldwide standardization. National bodies that are members of ISO or IEC participate in the development of International Standards through technical committees established by the respective organization to deal with particular fields of technical activity. ISO and IEC technical committees collaborate in fields of mutual interest. Other international organizations, governmental and non-governmental, in liaison with ISO and IEC, also take part in the work.

International Standards are drafted in accordance with the rules given in the ISO/IEC Directives, Part 3.

In the field of information technology, ISO and IEC have established a joint technical committee, ISO/IEC JTC 1. Draft International Standards adopted by the joint technical committee are circulated to national bodies for voting. Publication as an International Standard requires approval by at least 75 % of the national bodies casting a vote.

Attention is drawn to the possibility that some of the elements of this part of ISO/IEC 10373 may be the subject of patent rights. ISO and IEC shall not be held responsible for identifying any or all such patent rights.

International Standard ISO/IEC 10373-3 was prepared by Joint Technical Committee ISO/IEC JTC 1, *Information technology*, Subcommittee SC 17, *Identification cards and related devices*.

ISO/IEC 10373 consists of the following parts, under the general title *Identification cards — Test methods*:

— *Part 1: General characteristics tests*

— *Part 2: Cards with magnetic stripes*

— *Part 3: Integrated circuit(s) cards with contacts and related interface devices*

— *Part 4: Contactless integrated circuit cards*

— *Part 5: Optical memory cards*

— *Part 6: Proximity cards*

— *Part 7: Vicinity cards*

Annex A of this part of ISO/IEC 10373 is for information only.

--`,,```,,,,````-`-`,,`,,`,`,,`---

Copyright International Organization for Standardization
Provided by IHS under license with ISO
No reproduction or networking permitted without license from IHS

© ISO/IEC 2001 – All rights reserved

Not for Resale

Identification cards — Test methods —

Part 3:
Integrated circuit(s) cards with contacts and related interface devices

1 Scope

This part of ISO/IEC 10373 defines test methods for characteristics of integrated circuit(s) cards with contacts and related interface devices according to the definition given in ISO/IEC 7816. Each test method is cross-referenced to one or more base standards, which may be ISO/IEC 7810 or one or more of the supplementary standards that define the information storage technologies employed in identification card applications.

NOTE 1 Criteria for acceptability do not form part of this International Standard but will be found in the International Standards mentioned above.

This part of ISO/IEC 10373 deals with test methods, which are specific to integrated circuit technology with contacts. ISO/IEC 10373-1 deals with test methods which are common to one or more card technologies and other parts deal with other technology-specific tests.

Test methods described in this part of ISO/IEC 10373 are intended to be performed separately and independently. A given card is not required to pass through all the tests sequentially. The test methods described in this part of ISO/IEC 10373 are based on specifications defined or to be defined in ISO/IEC 7816.

Conformance of ICCs and IFDs determined using the test methods defined in this part of ISO/IEC 10373 do not preclude failures in the field. Reliability testing is outside the scope of this part of ISO/IEC 10373.

2 Normative references

The following normative documents contain provisions which, through reference in this text, constitute provisions of this part of ISO/IEC 10373. For dated references, subsequent amendments to, or revisions of, any of these publications do not apply. However, parties to agreements based on this part of ISO/IEC 10373 are encouraged to investigate the possibility of applying the most recent editions of the normative documents indicated below. For undated references, the latest edition of the normative document referred to applies. Members of ISO and IEC maintain registers of currently valid International Standards.

ISO/IEC 7810:1995, *Identification cards — Physical characteristics*.

ISO/IEC 7816-1:1998, *Identification cards — Integrated circuit(s) cards with contacts — Part 1: Physical characteristics*.

ISO/IEC 7816-2:1999, *Information technology — Identification cards — Integrated circuit(s) cards with contacts — Part 2: Dimensions and location of the contacts*.

ISO/IEC 7816-3:1997, *Information technology — Identification cards — Integrated circuit(s) cards with contacts — Part 3: Electronic signals and transmission protocols*.

ISO/IEC 7816-4:1995, *Information technology — Identification cards — Integrated circuit(s) cards with contacts — Part 4: Interindustry commands for interchange*.

ISO/IEC 10373-1:1998, *Identification cards — Test methods — Part 1: General characteristics tests*.

--`,,```,,,,````-`-`,,`,,`,`,,`---
© ISO/IEC 2001 — All rights reserved
Copyright International Organization for Standardization
Provided by IHS under license with ISO
No reproduction or networking permitted without license from IHS
Not for Resale

United States of America, Department of Defense, Test Method Standard, Microcircuits, MIL-STD-883, Version E, 31 December 1996, Method 3015.7 'Electrostatic discharge sensitivity classification'.

3 Terms and definitions

For the purposes of this part of ISO/IEC 10373, the following terms and definitions apply.

3.1
test method
method for testing characteristics of identification cards and related interface devices for the purpose of confirming their compliance with International Standards

3.2
testably functional
has survived the action of some potentially destructive influence to the extent that:

a) any magnetic stripe present on the card shows a relationship between signal amplitudes before and after exposure that is in accordance with the base standard;

b) any integrated circuit(s) present in the card continues to show an Answer to Reset response[1] which conforms to the base standard;

c) any contacts associated with any integrated circuit(s) present in the card continue to show electrical resistance which conforms to the base standard;

d) any optical memory present in the card continue to show optical characteristics which conform to the base standard

3.3
normal use
use as an Identification card (see clause 4 of ISO/IEC 7810:1995), involving equipment processes appropriate to the card technology and storage as a personal document between equipment processes

3.4
ICC
integrated circuit(s) card with contacts as defined in the ISO/IEC 7816 series of standards

3.5
IFD
interface device related to integrated circuit(s) cards with contacts as defined in the ISO/IEC 7816 series of standards

3.6
DUT
device under test; within the scope of this document the ICC or the IFD subject to testing

[1] This part of ISO/IEC 10373 does not define any test to establish the complete functioning of integrated circuit(s) cards. The test methods require only that the minimum functionality (testably functional) be verified. This may, in appropriate circumstances, be supplemented by further, application specific functionality criteria which are not available in the general case.

© ISO/IEC 2001 – All rights reserved
Copyright International Organization for Standardization
Provided by IHS under license with ISO
No reproduction or networking permitted without license from IHS
Not for Resale

3.7
typical protocol and application specific communication
any communication between a DUT and the corresponding test-apparatus based on protocol and application implemented in the DUT and representing its normal use

3.8
Test Scenario
a defined typical protocol and application specific communication to be used with the test methods defined in this document

4 General items applicable to the test methods

4.1 Test environment

Unless otherwise specified, testing of physical, electrical and logical characteristics shall take place in an environment of temperature 23 °C ± 3 °C, of relative humidity 40 % to 60 %.

4.2 Pre-conditioning

Where pre-conditioning is required by the test method, the identification cards to be tested shall be conditioned to the test environment for a period of 24 h before testing unless otherwise specified.

4.3 Default tolerance

Unless otherwise specified, a default tolerance of ± 5 % shall be applied to the quantity values given to specify the characteristics of the test equipment (e.g. linear dimensions) and the test method procedures (e.g. test equipment adjustments).

4.4 Total measurement uncertainty

The total measurement uncertainty for each quantity determined by these test methods shall be stated in the test report.

4.5 Conventions for electrical measurements

Potential differences are defined with respect to the GND contact of the ICC and currents flowing to the ICC are considered positive.

4.6 Apparatus

4.6.1 Default ICC-holder, reference axes and default measurement position

When required by the test-method, the ICC shall be positioned in the default measurement position as subsequently defined.

The default measurement position requires the ICC to be positioned in an ICC-holder and flattened by a flattening plate. All Measurements using this default measurement position shall be relative to the reference axes defined in Figure 1.

© ISO/IEC 2001 – All rights reserved

Copyright International Organization for Standardization
Provided by IHS under license with ISO
No reproduction or networking permitted without license from IHS
Not for Resale

4.6.1.1 Default ICC-holder and reference axes:

The default ICC holder shall comply with Figure 1:

Dimensions in millimetres
All Tolerances ± 0,01 mm

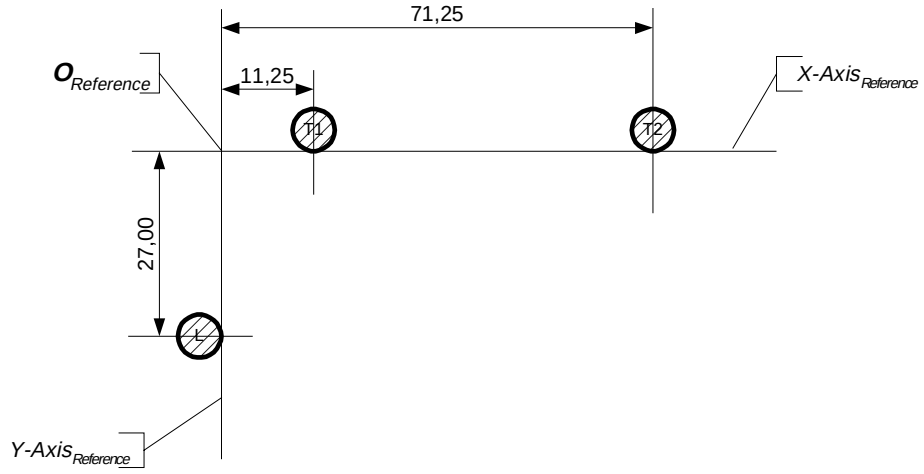

L, T1 and T2 shall be metal cylinders, having a diameter of 5 mm ± 0,1 mm, a surface roughness R_a < 5 µm, mounted on a level rigid plate with a surface roughness R_a < 5 µm.

Figure 1 — ICC-holder

4.6.1.2 Flattening Plate

The flattening plate shall comply with Figure 2:

Dimensions in mm
All Tolerances ± 0,1 mm

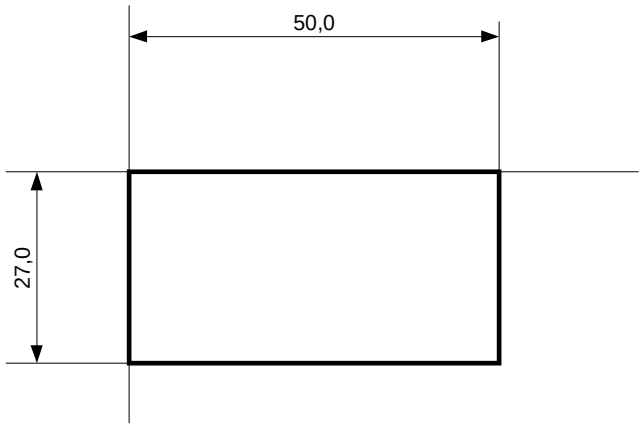

The surface roughness of the flattening plate shall be R_a < 5 µm.

Figure 2 — Flattening plate

Copyright International Organization for Standardization
Provided by IHS under license with ISO
No reproduction or networking permitted without license from IHS
Not for Resale
© ISO/IEC 2001 – All rights reserved

4.6.1.3 Default Measurement Position

The ICC and the flattening plate shall be mounted on the ICC-holder as shown in Figure 3:

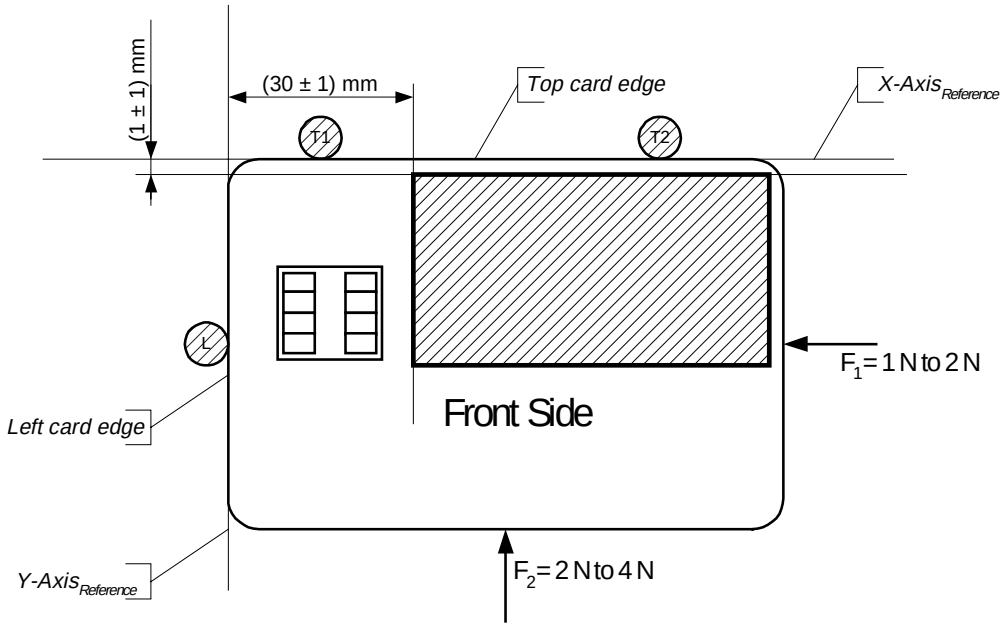

F_1 and F_2 are forces applied to the center of the right and the bottom edge of the card respectively to fix the card in the card-holder.
The flattening plate shall apply a force of 2,2 N ± 0,2 N to the surface of the card

Figure 3 — Position of ICC and flattening plate on ICC-holder

4.6.2 Apparatus for testing the integrated circuit(s) cards with contacts (ICC-test-apparatus)

4.6.2.1 General

All relative voltage definitions (e.g. $0,7 \times V_{CC}$, $0,15 \times V_{CC}$ or V_{CC} + 0,3 V) shall be determined relative to GND and checked against the simultaneously measured value of V_{CC}.

4.6.2.2 Generating the VCC voltage (V_{CC}) and timing

Parameter	ICC class	Range	Accuracy
V_{CC}	Class A	-1 V to 6 V	± 50 mV
	Class B	-1 V to 4 V	± 30 mV
t_R, t_F	Class A, Class B	500 µs	± 100 µs

--`,,```,,,,````-`-`,,`,,`,`,,`---
© ISO/IEC 2001 – All rights reserved
Copyright International Organization for Standardization
Provided by IHS under license with ISO
No reproduction or networking permitted without license from IHS
Not for Resale

4.6.2.3 Measuring the VCC current (I_{CC})

Characteristic	Mode	Range	Accuracy	Resolution
I_{CC}	Spike Measurement	0 mA to 200 mA	± 2 mA	20 ns
	Active mode	0 mA to 100 mA	± 1 mA	Averaged over 1 ms
	Clock stop	0 mA to 1 mA	± 10 µA	Averaged over 1 ms

4.6.2.4 Generating the VPP voltage (V_{PP}) and timing

Parameter	ICC class	Range	Accuracy	Resolution
V_{PP}	Class A	-1 V to 26 V	± 50 mV	20 ns
t_R, t_F	Class A	1 µs to 220 µs	± 1 µs	

NOTE 1 t_R and t_F are measured between 10% and 90% of V_H min and V_L max values.

NOTE 2 Certain functionality may not be implemented into the application in the ICC, hence in such circumstances the ICC-test-apparatus is not required to have the corresponding test-capability (e.g. V_{PP})

4.6.2.5 Measuring the VPP current (I_{PP})

Characteristic	Mode	Range	Accuracy	Resolution
I_{PP}	active (Programming State)	0 mA to 100 mA	±1 mA	100 ns
	inactive (Pause)	0 mA to 100 mA	±1 mA	100 ns

NOTE Certain functionality may not be implemented into the application in the ICC, hence in such circumstances the ICC-test-apparatus is not required to have the corresponding test-capability (e.g. I_{PP}).

Copyright International Organization for Standardization
Provided by IHS under license with ISO
No reproduction or networking permitted without license from IHS
Not for Resale
© ISO/IEC 2001 – All rights reserved

4.6.2.6 Generating the RST voltage and timing

Parameter	ICC class	Range	Accuracy
V_{IH}	Class A	2 V to 6 V	± 50 mV
	Class B	2 V to 4 V	± 30 mV
V_{IL}	Class A	-1 V to 2 V	± 50 mV
	Class B	-1 V to 2 V	± 30 mV
t_R, t_F		0 µs to 2 µs	± 20 ns
NOTE t_R and t_F are generated between 10% and 90% of V_H min and V_L max values.			

4.6.2.7 Measuring the RST current

Characteristic	Mode	Range	Accuracy	Resolution
I_{IH}	Active	-30 µA to 200 µA	± 10 µA	100 ns
I_{IL}	Active	-250 µA to 30 µA	± 10 µA	100 ns

4.6.2.8 Generating the I/O voltage and timing in reception mode

Parameter	Mode	ICC class	Range	Accuracy
V_{IH}	ICC: Reception, Apparatus: Transmission	Class A	2 V to 6 V	± 50 mV
		Class B	2 V to 4 V	± 30 mV
V_{IL}	ICC: Reception, Apparatus: Transmission	Class A	-1 V to 2 V	± 50 mV
		Class B	-1 V to 2 V	± 30 mV
t_R, t_F	ICC: Reception, Apparatus: Transmission		0 µs to 2 µs	± 100 ns
NOTE t_R and t_F are generated between 10% and 90% of V_H min and V_L max values.				

--`,,```,,,,````-`-`,,`,,`,`,,`---
© ISO/IEC 2001 – All rights reserved
Copyright International Organization for Standardization
Provided by IHS under license with ISO
No reproduction or networking permitted without license from IHS
Not for Resale

4.6.2.9 Measuring the I/O current in reception mode

Parameter	Mode	Range	Accuracy	Resolution
I_{IH}	ICC: Reception, Apparatus: Transmission	-350 µA to 30 µA	± 1 µA	100 ns
I_{IL}	ICC: Reception, Apparatus: Transmission	-1,5 mA to 30 µA	± 10 µA	100 ns

4.6.2.10 Generating the I/O current

Parameter	Mode	Range	Accuracy	Stabilization time after level is reached
I_{OH}	ICC: Transmission Apparatus: Reception	20 kΩ pull-up to VCC or equivalent circuit	± 200 Ω	
I_{OL}	ICC: Transmission Apparatus: Reception	0 mA to 1,5 mA	± 10 µA	< 100 ns

4.6.2.11 Measuring the I/O voltage and timing

Characteristic	ICC class	Range	Accuracy	Resolution
V_{IH}, V_{IL}	Class A	-1 V to 6 V	± 50 mV	20 ns
V_{IH}, V_{IL}	Class B	-1 V to 4 V	± 30 mV	20 ns
t_R, t_F		0 µs to 2 µs	± 20 ns	
NOTE t_R and t_F are measured between 10% and 90% of V_H min and V_L max values.				

Copyright International Organization for Standardization
Provided by IHS under license with ISO
No reproduction or networking permitted without license from IHS
Not for Resale
© ISO/IEC 2001 – All rights reserved

4.6.2.12 Generating the CLK-voltage

Parameter	ICC class	Range	Accuracy	Resolution
V_{IH}	Class A	2 V to 6 V	± 50 mV	20 ns
	Class B	2 V to 4 V	± 30 mV	20 ns
V_{IL}	Class A	-1 V to 2 V	± 50 mV	20 ns
	Class B	-1 V to 2 V	± 30 mV	20 ns

4.6.2.13 Generating the CLK-waveforms (single cycle measurement)

Parameter	Range	Accuracy
Duty cycle	35 % to 65 % of period	± 5 ns
Frequency	0,5 MHz to 5,5 MHz	± 5 kHz
Frequency	5 MHz to 20,5 MHz	± 50 kHz
t_R, t_F	1 % to 10 % of period	± 5 ns
NOTE t_R and t_F are generated between 10% and 90% of V_H (100%) min and V_L (0%) max.		

4.6.2.14 Measuring the CLK current

Characteristic	Mode	Range	Accuracy	Resolution
I_{IH}	active	-30 µA to 150 µA	± 10 µA	20 ns
I_{IL}	active	-150 µA to 30 µA	± 10 µA	20 ns

4.6.2.15 Measuring the contact capacitance of RST, CLK and I/O

Characteristic	Range	Accuracy
C	0 pF to 50 pF	± 5 pF
The contact capacitance of a contact shall be measured between the contact and the GND contact.		

© ISO/IEC 2001 – All rights reserved

Copyright International Organization for Standardization
Provided by IHS under license with ISO
No reproduction or networking permitted without license from IHS
Not for Resale

4.6.2.16 Generating the sequence of the activation and deactivation of the contacts

Range of switching the signals	Accuracy
0 s to 1 s	± 200 ns (or 1 clk period, whichever is smaller)

4.6.2.17 Emulating the I/O protocol

The ICC-test-apparatus shall be able to emulate the protocol T=0 and T=1 and IFD applications which are required to run the typical application specific communications corresponding to the ICC applications.

NOTE Certain functionality may not be implemented into the application in the ICC, hence in such circumstances the ICC-test-apparatus is not required to have the corresponding test-capability (e.g. T=1 protocol not implemented in the ICC)

4.6.2.18 Generating the I/O character timing in reception mode

The ICC-test-apparatus shall be able to generate the I/O bit stream according to ISO/IEC 7816-3:1997.

All timing parameters like start bit length, guardtime, error signaling etc. shall be configurable.

Parameter	Accuracy
all timing parameters	± 4 CLK cycles

4.6.2.19 Measuring and monitoring the I/O protocol

The ICC-test-apparatus shall be able to measure and monitor the timing of the logical low and high states of the I/O-line relative to the CLK-frequency.

Characteristic	Accuracy
all timing characteristics	± 2 CLK cycles

4.6.2.20 Protocol Analysis

The ICC-test-apparatus shall be able to analyze the I/O-bit stream in accordance to T=0 and T=1 protocol according to ISO/IEC 7816-3:1997 and extract the logical data flow for further protocol and application verifications.

NOTE Certain functionality may not be implemented into the application in the ICC, hence in such circumstances the ICC-test-apparatus is not required to have the corresponding test-capability (e.g. T=1 protocol not implemented in the ICC). Conversely, an apparatus may need extended capabilities, e.g. being able to generate any case 2 command (see ISO/IEC 7816-4:1995) if an ICC does not support the standard READ BINARY.

© ISO/IEC 2001 – All rights reserved
Copyright International Organization for Standardization
Provided by IHS under license with ISO
No reproduction or networking permitted without license from IHS
Not for Resale

4.6.3 Apparatus for testing the interface device (IFD-test-apparatus)

4.6.3.1 General

All relative voltage definitions (e.g. $0,7 \times V_{CC}$, $0,15 \times V_{CC}$ or V_{CC} + 0,3 V) shall be determined relative to GND and checked against the simultaneously measured value of V_{CC}.

4.6.3.2 Generating the VCC current (I_{CC})

Parameter	Mode	Range	Accuracy	Stabilization time after level is reached
I_{CC}	Spike Generation	0 mA to 120 mA	± 2 mA [b]	< 100 ns
	Active mode	0 mA to 70 mA	± 1 mA	< 100 ns
	Idle mode (clk-Stop)	0 mA to 1,2 mA	± 10 µA	< 100 ns
	Inactive [a]	-1,2 mA to 0 mA	± 10 µA	< 100 ns
t_R, t_F		100 ns	± 50 ns	
pulse length		100 ns to 500 ns	± 50 ns	
pause length frequently		100 ns to 1000 ns	± 50 ns	
pause length randomly		10 µs to 2000 µs	± 1 µs	

[a] The maximum output voltage shall be limited to 5 V.

[b] Dynamic conditions for Spike generation.

4.6.3.3 Measuring the VCC voltage (V_{CC}) and timing

Characteristic	ICC class	Range	Accuracy	Resolution
V_{CC}	Class A	- 1 V to 6 V	± 50 mV	20 ns
	Class B	- 1 V to 4 V	± 30 mV	20 ns

© ISO/IEC 2001 – All rights reserved

Copyright International Organization for Standardization
Provided by IHS under license with ISO
No reproduction or networking permitted without license from IHS
Not for Resale

4.6.3.4 Generating the VPP current (I_{PP})

Parameter	Mode	Range	Accuracy	Stabilization time after level is reached
I_{PP}	active	0 mA to 100 mA	± 1 mA	< 100 ns
	inactive [a]	- 1,2 mA to 0 mA	± 10 µA	< 100 ns
[a] The output voltage shall be limited from - 0,5 V to V_{PP}				

4.6.3.5 Measuring the VPP voltage (V_{PP}) and timing

Characteristic	ICC class	Voltage range	Accuracy	Resolution
V_{PP}	Class A	- 1 V to 25 V	± 50 mV	20 ns
t_R, t_F	Class A	1 µs to 220 µs	± 1 µs	
NOTE t_R and t_F are measured between 10% and 90% of V_H min and V_L max values.				

4.6.3.6 Generating the RST current

Parameter	Mode	Range	Accuracy	Stabilization time after level is reached
I_{IH}	active	- 30 µA to 200 µA	± 10 µA	< 100 ns
I_{IL}	active	- 250 µA to 30 µA	± 10 µA	< 100 ns
I [a]	inactive	- 1,2 mA to 0 mA	± 10 µA	< 100 ns
[a] The output voltage shall be limited from -0,5 V to 5,5 V.				

© ISO/IEC 2001 – All rights reserved
Copyright International Organization for Standardization
Provided by IHS under license with ISO
No reproduction or networking permitted without license from IHS
Not for Resale

4.6.3.7 Measuring RST voltage and timing

Characteristic	ICC class	Range	Accuracy	Resolution
V_{IH}	Class A	2 V to 6 V	± 50 mV	20 ns
	Class B	2 V to 4 V	± 30 mV	20 ns
V_{IL}	Class A	- 1 V to 2 V	± 50 mV	20 ns
	Class B	- 1 V to 2 V	± 30 mV	20 ns
t_R, t_F		0 µs to 2 µs	± 20 ns	
NOTE t_R and t_F are measured between 10% and 90% of V_H min and V_L max values.				

4.6.3.8 Generating the I/O currents

Parameter	Mode	Range	Accuracy	Stabilization time after level is reached
I_{IH}, I_{OH}	Apparatus: Reception and Transmission IFD: Transmission and Reception	-400 µA to 50 µA	± 5 µA	< 100 ns
I_{IL}	Apparatus: Reception IFD: Transmission and Reception	0 mA to 1,5 mA	± 10 µA	< 100 ns
I_{OL}	IFD: Reception	0 µA to 1200 µA	± 10 µA	< 100 ns
I [a]	Inactive	- 1,2 mA to 0 mA	± 10 µA	< 100 ns
[a] The output voltage shall be limited to -0,5 V to 5,5 V.				

© ISO/IEC 2001 – All rights reserved

Copyright International Organization for Standardization
Provided by IHS under license with ISO
No reproduction or networking permitted without license from IHS
Not for Resale

4.6.3.9 Measuring the I/O voltage and timing

Characteristic	ICC class	Range	Accuracy	Resolution
V_{IH}	Class A	2 V to 6 V	± 50 mV	20 ns
	Class B	2 V to 4 V	± 30 mV	20 ns
V_{IL}	Class A	- 1 V to 2 V	± 50 mV	20 ns
	Class B	- 1 V to 2 V	± 30 mV	20 ns
t_R, t_F		0 µs to 2 µs	± 20 ns	
NOTE t_R and t_F are measured between 10% and 90% of V_H min and V_L max values.				

4.6.3.10 Generating the I/O voltage and timing in transmission mode

Parameter	ICC class	Range	Accuracy
V_{OH}	Class A	2 V to 6 V	± 50 mV
	Class B	2 V to 4 V	± 30 mV
V_{OL}	Class A	- 1 V to 2 V	± 50 mV
	Class B	- 1 V to 2 V	± 30 mV
t_R, t_F		0 µs to 2 µs	± 20 ns
NOTE 1 V_{OH} only needs to be generated because of the rising edge generation mechanism and shall be switched off at least 10 µs after the rising edge.			
NOTE 2 t_R and t_F are generated between 10% and 90% of V_H min and V_L max values.			

4.6.3.11 Measuring the I/O current in transmission mode

Parameter	Mode	Range	Accuracy	Resolution
I_{OL}	Transmission	0 µA to 1200 µA	± 10 µA	20 ns
I [a]	Inactive	0 mA to 1,2 mA	± 10 µA	20 ns
[a] The output voltage shall be limited to - 0,5 V to 5,5 V.				

Copyright International Organization for Standardization
Provided by IHS under license with ISO
No reproduction or networking permitted without license from IHS
Not for Resale
© ISO/IEC 2001 – All rights reserved

4.6.3.12 Generating the CLK current

Parameter	Mode	Range	Accuracy	Stabilization time after level is reached
I_{IH}	active	-30 µA to 150 µA	± 10 µA	< 20 ns
I_{IL}	active	-150 µA to 30 µA	± 10 µA	< 20 ns
I [a]	inactive	-1,2 mA to 0 mA	± 10 µA	< 100 ns

[a] The output voltage shall be limited to -0,5 V to 5,5 V.

4.6.3.13 Measuring the CLK-voltage and timing

Characteristic	ICC class	Range	Accuracy	Resolution
V_{IH}	Class A	2 V to 6 V	± 50 mV	20 ns
	Class B	2 V to 4 V	± 30 mV	20 ns
V_{IL}	Class A	-1 V to 2 V	± 50 mV	20 ns
	Class B	-1 V to 2 V	± 30 mV	20 ns

4.6.3.14 Measuring the CLK-waveforms (single cycle measurement)

Characteristic	Range	Accuracy
Duty cycle [a]	35 % to 65 % of period	± 2,5 % of period
Frequency [b]	0,5 MHz to 20,5 MHz	± 2,5 % of period
t_R, t_F [c]	1 % to 10 % of period	± 2,5 % of period

The IFD-test-apparatus shall be able to check every cycle during the measurement.

[a] Duty cycle shall be measured from 50% to 50% of V_H min (100%) and V_L max (0%) rising edge to rising edge.

[b] Frequency shall be measured from 50% to 50% of the leading edges of two adjacent clock-cycles of V_H min (100%) and V_L max (0%) rising edge to rising edge.

[c] t_R and t_F shall be measured between 10% and 90% of V_H (100%) min and V_L (0%) max.

© ISO/IEC 2001 – All rights reserved

Copyright International Organization for Standardization
Provided by IHS under license with ISO
No reproduction or networking permitted without license from IHS
Not for Resale

4.6.3.15 Measuring the contact capacitance between GND and I/O

Characteristic	Range	Accuracy
C	0 pF to 50 pF	± 5 pF

4.6.3.16 Emulating the I/O protocol

The IFD-test-apparatus shall be able to emulate the protocol T=0 and T=1 and ICC applications which are required to run the Test Scenario.

NOTE Certain functionality may not be implemented into the application in the ICC, hence in such circumstances the IFD-test-apparatus is not required to have the corresponding test-capability (e.g. T=1 protocol not implemented in the ICC)

4.6.3.17 Generating the I/O character timing in transmission mode

The Test IFD-test-apparatus shall be able to generate the I/O bit stream according to ISO/IEC 7816-3:1997 relative to the CLK-frequency.

All timing parameters like start bit length, guardtime and error signaling etc. shall be configurable.

Parameter	Accuracy
all timing parameters	± 4 CLK cycles

4.6.3.18 Measuring and monitoring the I/O protocol

The IFD-test-apparatus shall be able to measure and monitor the timing of the logical low and high states of the I/O-line relative to the CLK-frequency.

Characteristic	Accuracy
all timing characteristics	± 2 CLK cycles

4.6.3.19 Protocol Analysis

The Test IFD-test-apparatus shall be able to analyze the I/O-bit stream in accordance to T=0 and T=1 protocol according to ISO/IEC 7816-3:1997 and extract the logical data flow for further protocol and application verifications.

NOTE Certain functionality may not be implemented into the application in the ICC, hence in such circumstances the IFD-test-apparatus is not required to have the corresponding test-capability (e.g. T=1 protocol not implemented in the ICC)

© ISO/IEC 2001 – All rights reserved
Copyright International Organization for Standardization
Provided by IHS under license with ISO
No reproduction or networking permitted without license from IHS
Not for Resale

4.6.3.20 Overall Impedance (current and voltage sources inactive)

Contact	Resistance	Accuracy	Capacity	Accuracy
VCC	10 kΩ	± 1 kΩ	30 pF	± 6 pF
VPP	50 kΩ	± 5 kΩ	30 pF	± 6 pF
I/O	50 kΩ	± 5 kΩ	30 pF	± 6 pF
RST	50 kΩ	± 5 kΩ	30 pF	± 6 pF
CLK	50 kΩ	± 5 kΩ	30 pF	± 6 pF

4.6.4 Test Scenario

Testing of the DUT as defined in clauses 6, 7, 8 and 9 requires a Test Scenario to be executed. This Test Scenario is a 'typical protocol and application specific communication', dependent from the protocol and application specific functionality foreseen for the normal use of and implemented in the DUT.

The Test Scenario shall be defined by the entity carrying out these tests and shall be documented with the test-results. The Test Scenario shall encompass a representative subset or preferably, if practical, the full functionality of the DUT expected to be utilized during normal use. The Test Scenario shall have a duration of at least 1 second.

NOTE The testing entity may require information about the implemented protocol and functionality as well as the intended use of the DUT to enable the testing entity to define a Test Scenario.

4.7 Relationship of test methods versus base standard requirements

Table 1 — Test methods for physical characteristics of ICCs with contacts

Test method from ISO/IEC 10373-3		Corresponding Requirement	
Clause	Name	Base Standard	Clause(s)
5.1	Dimension and Location of Contacts	ISO/IEC 7816-2:1999	3, 4
5.2	Static electricity	ISO/IEC 7816-1:1998	4.2.8
5.3	Electrical surface resistance of contacts		
5.4	Surface profile of contacts	ISO/IEC 7816-1:1998	4.2.3

© ISO/IEC 2001 – All rights reserved

Copyright International Organization for Standardization
Provided by IHS under license with ISO
No reproduction or networking permitted without license from IHS
Not for Resale

Table 2 — Test methods for electrical characteristics of ICCs with contacts

Test method from ISO/IEC 10373-3		Corresponding Requirement	
Clause	Name	Base Standard	Clause(s)
6.1	VCC contact	ISO/IEC 7816-3:1997	4.3.2
6.2	I/O contact	ISO/IEC 7816-3:1997	4.3.3
6.3	CLK contact	ISO/IEC 7816-3:1997	4.3.4
6.4	RST contact	ISO/IEC 7816-3:1997	4.3.5
6.5	VPP contact	ISO/IEC 7816-3:1997	4.3.6

Table 3 — Test methods for logical operations of ICCs with contacts — Answer to Reset (ATR)

Test method from ISO/IEC 10373-3		Corresponding Requirement	
Clause	Name	Base Standard	Clause(s)
7.1.1	Cold Reset and Answer-to-Reset (ATR)	ISO/IEC 7816-3:1997	5.2, 5.3.2, 6.3
7.1.2	Warm Reset	ISO/IEC 7816-3:1997	5.3.3
7.1.3	Selection of the operation class A	ISO/IEC 7816-3:1997	4.2.2

Table 4 — Test methods for logical operations of ICCs with contacts — T=0 Protocol

Test method from ISO/IEC 10373-3		Corresponding Requirement	
Clause	Name	Base Standard	Clause(s)
7.2.1	I/O transmission timing for T=0 protocol	ISO/IEC 7816-3:1997	6.3.1, 6.3.2, 8.2
7.2.2	I/O character repetition for T=0 protocol	ISO/IEC 7816-3:1997	6.3.3, 8.2
7.2.3	I/O reception timing and error signaling for T=0 protocol	ISO/IEC 7816-3:1997	6.3.1, 6.3.2, 6.3.3, 8.2

--`,,```,,,,````-`-`,,`,,`,`,,`---

Copyright International Organization for Standardization
Provided by IHS under license with ISO
No reproduction or networking permitted without license from IHS
Not for Resale
© ISO/IEC 2001 – All rights reserved

Table 5 — Test methods for logical operations of ICCs with contacts — T=1 Protocol

Test method from ISO/IEC 10373-3		Corresponding Requirement	
Clause	Name	Base Standard	Clause(s)
7.3.1	I/O transmission timing for T=1 protocol	ISO/IEC 7816-3:1997	6.3.1, 6.3.2, 6.5.3, 9.3, 9.4, 9.5.2, 9.5.3
7.3.2	I/O reception timing for T=1 protocol	ISO/IEC 7816-3:1997	6.3.1, 6.3.2, 6.5.3, 9.3, 9.4, 9.5.2, 9.5.3
7.3.3	ICC Character Waiting Time (CWT) behavior	ISO/IEC 7816-3:1997	9.5.3.1
7.3.4	ICC-reaction to IFD exceeding character waiting time (CWT)	ISO/IEC 7816-3:1997	9.5.3.1
7.3.5	Block Guardtime (BGT)	ISO/IEC 7816-3:1997	9.5.3.3
7.3.6	Block sequencing by the ICC	ISO/IEC 7816-3:1997	9.7.3
7.3.7	Reactions of the ICC to protocol errors	ISO/IEC 7816-3:1997	9.7.3
7.3.8	Recovery of a transmission error by the ICC	ISO/IEC 7816-3:1997	9.7.3
7.3.9	Resynchronization	ISO/IEC 7816-3:1997	9.7.3
7.3.10	IFSD negotiation	ISO/IEC 7816-3:1997	9.5.2
7.3.11	Abortion by the IFD	ISO/IEC 7816-3:1997	9.7.3

© ISO/IEC 2001 – All rights reserved

Copyright International Organization for Standardization
Provided by IHS under license with ISO
No reproduction or networking permitted without license from IHS
Not for Resale

Table 6 — Test methods for physical and electrical characteristics of the IFD

Test method from ISO/IEC 10373-3		Corresponding Requirement	
Clause	Name	Base Standard	Clause(s)
8.1	Activation of contacts	ISO/IEC 7816-3:1997	5.2, 5.3.1, 5.3.2
8.2	VCC contact	ISO/IEC 7816-3:1997	4.3.2
8.3	I/O contact	ISO/IEC 7816-3:1997	4.3.3
8.4	CLK contact	ISO/IEC 7816-3:1997	4.3.4
8.5	RST contact	ISO/IEC 7816-3:1997	4.3.5
8.6	VPP contact	ISO/IEC 7816-3:1997	4.3.6
8.7	Deactivation of the contacts	ISO/IEC 7816-3:1997	5.4

Table 7 — Test methods for logical operations of the IFD — Answer to Reset (ATR)

Test method from ISO/IEC 10373-3		Corresponding Requirement	
Clause	Name	Base Standard	Clause(s)
9.1.1	ICC Reset (cold reset)	ISO/IEC 7816-3:1997	5.3.2
9.1.2	ICC Reset (warm reset)	ISO/IEC 7816-3:1997	5.3.3

Table 8 — Test methods for logical operations of the IFD — T=0 Protocol

Test method from ISO/IEC 10373-3		Corresponding Requirement	
Clause	Name	Base Standard	Clause(s)
9.2.1	I/O transmission timing for T=0 protocol	ISO/IEC 7816-3:1997	6.3.1, 6.3.2, 8.2
9.2.2	I/O character repetition for T=0 protocol	ISO/IEC 7816-3:1997	6.3.3, 8.2
9.2.3	I/O reception timing and error signaling for T=0 protocol	ISO/IEC 7816-3:1997	6.3.1, 6.3.2, 6.3.3, 8.2

Copyright International Organization for Standardization
Provided by IHS under license with ISO
No reproduction or networking permitted without license from IHS
Not for Resale
© ISO/IEC 2001 – All rights reserved

Table 9 — Test methods for logical operations of the IFD — T=1 Protocol

Test method from ISO/IEC 10373-3		Corresponding Requirement	
Clause	Name	Base Standard	Clause(s)
9.3.1	I/O transmission timing for T=1 protocol	ISO/IEC 7816-3:1997	6.3.1, 6.3.2, 6.5.3, 9.3, 9.4, 9.5.2, 9.5.3
9.3.2	I/O reception timing for T=1 protocol	ISO/IEC 7816-3:1997	6.3.1, 6.3.2, 6.5.3, 9.3, 9.4, 9.5.2, 9.5.3
9.3.3	IFD Character Waiting Time (CWT) behavior	ISO/IEC 7816-3:1997	9.5.3.1
9.3.4	IFD-reaction to ICC exceeding CWT	ISO/IEC 7816-3:1997	9.5.3.1
9.3.5	Block Guardtime (BGT)	ISO/IEC 7816-3:1997	9.5.3.3
9.3.6	Block sequencing by the IFD	ISO/IEC 7816-3:1997	9.7.3
9.3.7	Recovery of a transmission error by the IFD	ISO/IEC 7816-3:1997	9.7.3
9.3.8	IFSC negotiation	ISO/IEC 7816-3:1997	9.5.2
9.3.9	Abortion by the ICC	ISO/IEC 7816-3:1997	9.7.3

5 Test methods for physical characteristics of ICCs with contacts

5.1 Dimension and Location of Contacts

The purpose is to determine the compliance of the dimensions and the location of the ICC's contacts with ISO/IEC 7816-2:1999.

5.1.1 Apparatus

An ICC-Holder and a flattening plate compliant with clause 4.6.1

Any device capable of executing the procedure below with the defined accuracy.

5.1.2 Procedure

a) Mount the ICC in the default measurement position as defined in 4.6.1.

b) Construct two lines parallel to the $X\text{-}Axis_{Reference}$ and two lines parallel to the $Y\text{-}Axis_{Reference}$ on the ICC surface, forming the minimum contact area C1 as defined in ISO/IEC 7816-2:1999 with an accuracy of equal to or better than 0,01 mm.

c) Check, if the rectangular area enclosed by the four lines is completely covered by contact metallization and note the result.

© ISO/IEC 2001 – All rights reserved

Copyright International Organization for Standardization
Provided by IHS under license with ISO
No reproduction or networking permitted without license from IHS
Not for Resale

d) Check, if the metallization within the rectangular area enclosed by the four lines is connected to metallization in any other minimum contact area and note the result.

e) Repeat b) to d) for the minimum contact areas C2 to C8.

5.1.3 Test report

The test report shall state for each observed minimum contact area, whether it is completely covered by contact metallization and if it is connected to metallization in any other minimum contact area.

5.2 Static electricity

To test the compliance with the requirement from the base standard, the following test method shall be used:

United States of America, Department of Defense, Test Method Standard, Microcircuits, MIL-STD-883, Version E, 31 December 1996, Method 3015.7 'Electrostatic discharge sensitivity classification'.

NOTE One way of obtaining this document is to download it from the WWW-site of the Defense Supply Center, Columbus, United States of America using the URL's http://www.dscccols.com or http://www.dscc.dla.mil.

5.2.1 Test Report

The test report shall state the class of ESD failure threshold.

5.3 Electrical surface resistance of contacts

The purpose of this test is to determine the surface resistance of the ICC contact surface.

This test method supersedes the test method defined in ISO/IEC 7816-1:1998, 4.2.5.

5.3.1 Apparatus

Ohmmeter with a range from 10 mΩ to 2 Ω having an accuracy of ± 2 mΩ and test prods as defined in Figure 4. The measurement current shall be less than or equal to 100 mA and the measurement voltage shall be less than or equal to 20 mV.

© ISO/IEC 2001 – All rights reserved
Copyright International Organization for Standardization
Provided by IHS under license with ISO
No reproduction or networking permitted without license from IHS
Not for Resale

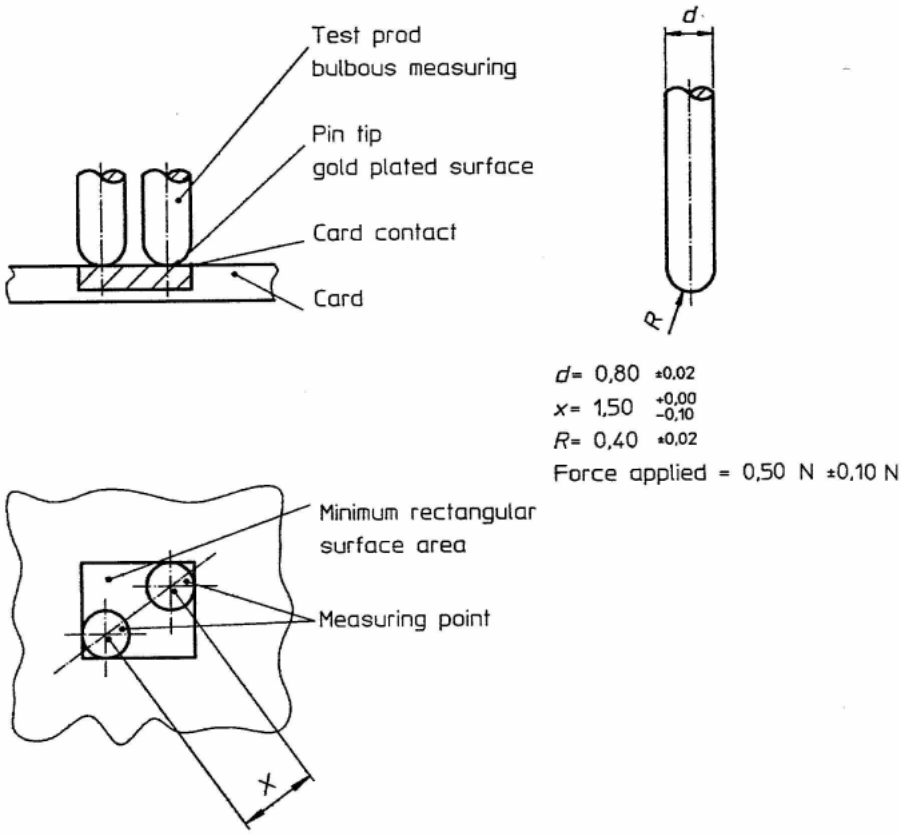

Figure 4 — Test prods

5.3.2 Procedure

Place the ICC on a flat hard surface.

Apply the two test prods to each present minimum contact area as defined in ISO/IEC 7816-2:1999.

Measure the electrical resistance between the two test-prods for each present minimum contact area.

NOTE Start applying measurement current and voltage after making the mechanical contact.

5.3.3 Test report

Report the resistance values for each measured minimum contact area.

5.3.4 Preliminary requirement

The base standard does not specify a value corresponding to this test. Until the base standard is revised, 500 mΩ shall be used as the maximum allowed surface resistance.

© ISO/IEC 2001 – All rights reserved

Copyright International Organization for Standardization
Provided by IHS under license with ISO
No reproduction or networking permitted without license from IHS
Not for Resale

5.4 Surface profile of contacts

The purpose is to determine the difference in thickness between the ICC's contacts and the adjacent ICC surface.

5.4.1 Apparatus

An ICC-Holder and a flattening plate compliant with clause 4.6.1.

A measurement device measuring the distance between the level rigid plate of the ICC-holder and the surface of an ICC placed on the ICC-holder rectangular to the level rigid plate with an accuracy of 0,01 mm. The area of measurement shall be 2,5 mm wider in all directions than the area covered by contact metallization of the ICC to be tested. The measurement tip shall be equivalent to Figure 5:

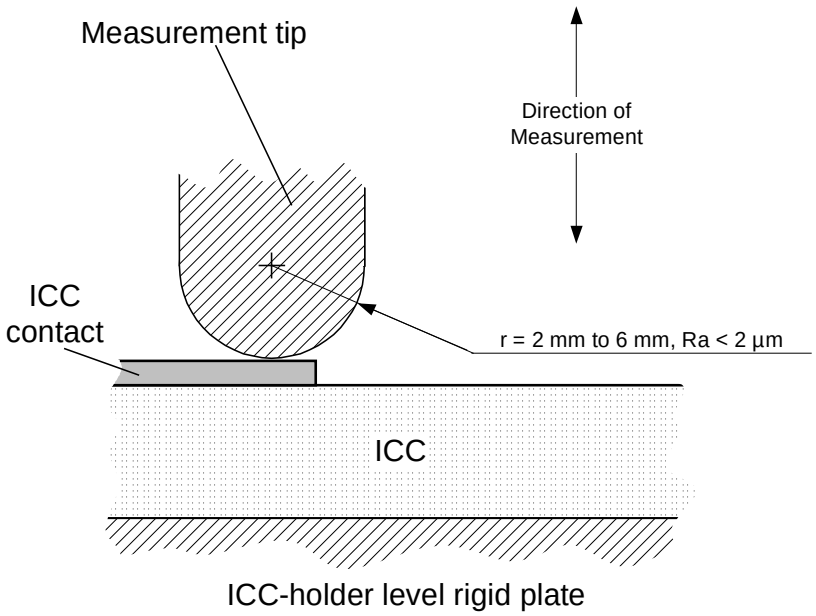

Figure 5 — Measurement tip

5.4.2 Procedure

The positioning tolerance of the measurement tip relative to the measurement line in the procedure below shall not exceed 0,5 mm.

a) Mount the ICC in the default measurement position as defined in 4.6.1.

b) Construct a measurement line on the surface of the ICC along the centerline of the minimum contact areas C1 and C5, beginning and ending at a distance of 2 mm of the metallized contact surface (Figure 6).

c) Measure the distance between the level rigid plate and the start and endpoint of the measurement line and calculate the arithmetic average of the two distances, subsequently called *'base thickness'*.

d) Determine the minimum and maximum distance between the level rigid plate and all points on the surface of the ICC along the measurement line.

© ISO/IEC 2001 – All rights reserved
Copyright International Organization for Standardization
Provided by IHS under license with ISO
No reproduction or networking permitted without license from IHS
Not for Resale

e) Calculate the difference between the base thickness and the maximum and minimum distance determined under d) in such a way that a distance higher than the base thickness results in a positive value and a distance below in a negative.

f) Repeat b) to e) for the centerlines of the contacts C2 and C6, C3 and C7 and, if present, C4 and C8.

g) Determine the minimum and maximum value of all values determined under e).

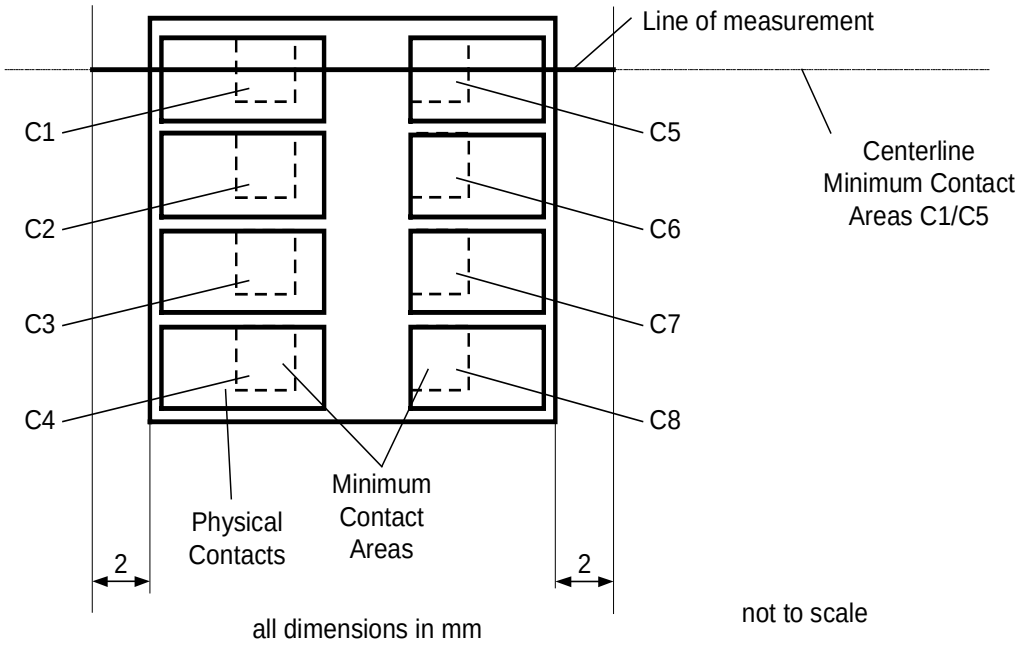

Figure 6 — Measurement line across contacts C1 and C5

5.4.3 Test report

Report the minimum and maximum value determined in the procedure, step g) and the radius of the measurement tip used.

6 Test methods for electrical characteristics of ICCs with contacts

6.1 VCC contact

The purpose of this test is to measure the current consumed by the ICC on the VCC contact and to check if the ICC operates within the specified range of V_{CC} (see ISO/IEC 7816-3:1997, 4.3.2).

6.1.1 Apparatus

See clause 4.6.2

6.1.2 Procedure

Connect the ICC to the ICC-test-apparatus.

© ISO/IEC 2001 – All rights reserved
Copyright International Organization for Standardization
Provided by IHS under license with ISO
No reproduction or networking permitted without license from IHS
Not for Resale

a) Set the following parameters in the ICC-test-apparatus (begin with lowest voltage class supported by the ICC):

Parameter	Setting
V_{CC}	V_{CC} min
f_{CLK}	f_{CLK} max [a]
[a] f_{CLK} max in accordance with ISO/IEC 7816-3:1997, 6.5.2	

b) Reset the ICC.

c) Run the Test Scenario. During this communication the following signals shall be continuously monitored and the following values determined:

Characteristic	Value
I_{CC}	I_{CC} max

d) Perform a clock stop in accordance with ISO/IEC 7816-3:1997, 5.3.4 if supported by the ICC. During the clock stop the following signals shall be continuously monitored and the following values determined:

Characteristic	Value
I_{CC}	I_{CC} max

e) Restart f_{CLK} in accordance with ISO/IEC 7816-3:1997, 5.3.4.

f) Run the Test Scenario. During this communication the following characteristics shall be continuously monitored and the following values determined:

Characteristic	Value
I_{CC}	I_{CC} max

g) Repeat step b) to f) with $V_{CC} = V_{CC}$ max.

h) Repeat test a) to g) for all voltage classes supported by the ICC.

6.1.3 Test report

Report the values determined in the procedure and whether all communications were in conformance with ISO/IEC 7816-3:1997.

© ISO/IEC 2001 – All rights reserved
Copyright International Organization for Standardization
Provided by IHS under license with ISO
No reproduction or networking permitted without license from IHS
Not for Resale

6.2 I/O contact

The purpose of this test is to measure the contact capacitance of the I/O contact, the I/O output voltages (V_{OH} , V_{OL}) under normal operating conditions (I_{OL} max/min and I_{OH} max/min), I/O t_R and t_F during transmission mode of the ICC and the I/O input current (I_{IL}) during reception mode of the ICC.

6.2.1 Apparatus

See clause 4.6.2

6.2.2 Procedure

Connect the ICC to the ICC-test-apparatus.

a) Measure the capacitance C_{IO} of the I/O-contact.

b) Set the following parameters in the ICC-test-apparatus (begin with lowest voltage class supported by the ICC):

Parameter	Setting
V_{CC}	V_{CC} max
V_{IH}	V_{IH} min
V_{IL}	V_{IL} min
I_{OH}	a
I_{OL}	I_{OL} max
t_R	t_R max
t_F	t_F max

a Instead of a current source for I_{OH} a 20 kΩ resistor to VCC or an equivalent circuit shall be used to prevent from overvoltage damages to the ICC.

c) Reset the ICC.

d) Run the Test Scenario. During this communication the following characteristics shall be continuously monitored and the following values determined:

--`,,```,,,,````-`-`,,`,,`,`,,`---
© ISO/IEC 2001 – All rights reserved
Copyright International Organization for Standardization
Provided by IHS under license with ISO
No reproduction or networking permitted without license from IHS
Not for Resale

Characteristic	Value
I_{IH}	I_{IH} max
I_{IL}	I_{IL} max
V_{OH}	V_{OH} min, V_{OH} max
V_{OL}	V_{OL} min, V_{OL} max
t_R	t_R max
t_F	t_F max

e) Power down the ICC.

f) Set the ICC-test-apparatus to the following parameters:

Signal	Setting
V_{CC}	V_{CC} min
V_{IH}	V_{IH} max
V_{IL}	V_{IL} max
I_{OH}	a
I_{OL}	I_{OL} max
t_R	t_R max
t_F	t_F max

a Instead of a current source for I_{OH} a 20 kΩ resistor to VCC or an equivalent circuit shall be used to prevent from overvoltage damages to the ICC.

g) Reset the ICC.

h) Run the Test Scenario. During this communication the following characteristics shall be continuously monitored and the following values determined:

© ISO/IEC 2001 – All rights reserved
Copyright International Organization for Standardization
Provided by IHS under license with ISO
No reproduction or networking permitted without license from IHS
Not for Resale

Characteristic	Value
I_{IH}	I_{IH} max
I_{IL}	I_{IL} max
V_{OH}	V_{OH} min, V_{OH} max
V_{OL}	V_{OL} min, V_{OL} max
t_R	t_R max
t_F	t_F max

i) Power down the ICC.

j) repeat step b) to i) for all supported voltage classes

6.2.3 Test report

Report the capacitance of the I/O-contact, the values determined in the procedure and whether all communications were in conformance with ISO/IEC 7816-3:1997.

6.3 CLK contact

The purpose of this test is to measure the current consumed by the ICC on the CLK contact and to check if the ICC runs with the specified clock frequencies and waveforms (see ISO/IEC 7816-3:1997, 4.3.4 and 6.5.2).

6.3.1 Apparatus

See clause 4.6.2

6.3.2 Procedure

Connect the ICC to the ICC-test-apparatus.

a) Measure the capacitance C_{CLK} of the CLK-contact.

b) Set the following parameters in the ICC-test-apparatus (begin with lowest voltage class supported by the ICC):

© ISO/IEC 2001 – All rights reserved

Copyright International Organization for Standardization
Provided by IHS under license with ISO
No reproduction or networking permitted without license from IHS
Not for Resale

Signal	Setting
V_{CC}	V_{CC} max
V_{IH}	V_{IH} min
V_{IL}	V_{IL} min
f_{CLK}	f_{CLK} min
Duty cycle	40 % high

c) Reset the ICC.

d) Set f_{CLK} to f_{CLK} max in accordance with ISO/IEC 7816-3:1997, 6.5.2.

e) Run the Test Scenario. During this communication the following characteristics shall be continuously monitored and the following values determined:

Characteristic	Value
I_{IH}	I_{IH} max
I_{IL}	I_{IL} max

f) Power down the ICC.

g) Set the ICC-test-apparatus to the following parameters:

Parameter	Setting
V_{CC}	V_{CC} min
V_{IH}	V_{IH} max
V_{IL}	V_{IL} max
f_{CLK}	f_{CLK} max
Duty cycle	40 % high

h) Reset the ICC.

i) Run the Test Scenario. During this communication the following signals shall be continuously monitored and the following values determined:

© ISO/IEC 2001 – All rights reserved
Copyright International Organization for Standardization
Provided by IHS under license with ISO
No reproduction or networking permitted without license from IHS
Not for Resale

Characteristic	Value
I_{IH}	I_{IH} max
I_{IL}	I_{IL} max

j) Power down the ICC.

k) Repeat step b) to j) for all supported voltage classes.

6.3.3 Test report

Report the capacitance of the CLK-contact, the values determined in the procedure and whether all communications were in conformance with ISO/IEC 7816-3:1997.

6.4 RST contact

The purpose of this test is to measure the current consumed by the ICC on the RST contact and to check if the ICC runs with the allowed min and max timing values and voltages of a RST signal (see ISO/IEC 7816-3:1997, 5.3.2).

6.4.1 Apparatus

See clause 4.6.2

6.4.2 Procedure

Connect the ICC to the ICC-test-apparatus.

a) Measure the capacitance C_{RST} of the RST-contact.

b) Set the following parameters in the ICC-test-apparatus (begin with lowest voltage class supported by the ICC):

Parameter	Setting
V_{CC}	V_{CC} max
V_{IH}	V_{IH} min
V_{IL}	V_{IL} min
f_{CLK}	f_{CLK} min

c) Reset the ICC.

d) Run the Test Scenario. During this communication the following signals shall be continuously monitored and the following values determined:

© ISO/IEC 2001 – All rights reserved

Copyright International Organization for Standardization
Provided by IHS under license with ISO
No reproduction or networking permitted without license from IHS
Not for Resale

Characteristic	Value
I_{IH}	I_{IH} max
I_{IL}	I_{IL} max

e) Power down the ICC.

f) Set the ICC-test-apparatus to the following parameters:

Parameter	Setting
V_{CC}	V_{CC} min
V_{IL}	V_{IL} max
V_{IH}	V_{IH} max
f_{CLK}	f_{CLK} max

g) Reset the ICC.

h) Run the Test Scenario. During this communication the following signals shall be continuously monitored and the following values determined:

Characteristic	Value
I_{IH}	I_{IH} max
I_{IL}	I_{IL} max

i) Power down the ICC.

j) Repeat step b) to i) for all supported voltage classes.

6.4.3 Test report

The test report shall state the capacitance of the RST-contact, the values determined in the procedure and whether all communications were in conformance with ISO/IEC 7816-3:1997.

6.5 VPP contact

This test applies if the requirement for V_{PP} is indicated by the ICC in the ATR under class A operating conditions. If V_{PP} is indicated by the ICC, the test-apparatus shall request a write procedure (this is application and protocol dependent) to be initiated by the ICC. When the ICC requests the programming state, the ICC-test-apparatus applies V_{PP} and measures I_{PP}.

© ISO/IEC 2001 – All rights reserved
Copyright International Organization for Standardization
Provided by IHS under license with ISO
No reproduction or networking permitted without license from IHS
Not for Resale

7 Test methods for logical operations of ICCs with contacts

7.1 Answer to Reset (ATR)

7.1.1 Cold Reset and Answer-to-Reset (ATR)

The purpose of this test is to determine the behavior of the ICC during the cold reset procedure according to ISO/IEC 7816-3:1997 5.3.2.

7.1.1.1 Apparatus

See clause 4.6.2

7.1.1.2 Procedure

Connect the ICC to the ICC-test-apparatus.

During the following procedure the following contacts shall be continuously monitored and all signal transitions (level and timing) as well as the logical content of the communication shall be recorded:

Contact
VCC
RST
CLK
I/O

a) Activate the ICC in accordance with 7816-3:1997, 5.2.

b) Set RST to state H 400 clock-cycles after CLK was activated.

c) If the ICC reacts with sending an ATR, signal a transmission error in accordance with ISO/IEC 7816-3:1997, 6.3.3 for at least one character (randomly chosen) of the ATR.

d) Run the Test Scenario with the ICC.

e) Power down the ICC.

7.1.1.3 Test report

Report the signal recordings and the ATR.

7.1.2 Warm Reset

The purpose of this test is to determine the behavior of the ICC during the warm reset procedure according to ISO/IEC 7816-3:1997, 5.3.3.

© ISO/IEC 2001 – All rights reserved

Copyright International Organization for Standardization
Provided by IHS under license with ISO
No reproduction or networking permitted without license from IHS
Not for Resale

7.1.2.1 Apparatus

See clause 4.6.2

7.1.2.2 Procedure

Connect the ICC to the ICC-test-apparatus.

During the following procedure the following contacts shall be continuously monitored and all signal transitions (level and timing) as well as the logical content of the communication shall be recorded:

Contact
VCC
RST
CLK
I/O

a) Activate and reset the ICC in accordance with ISO/IEC 7816-3:1997, 5.2 and 5.3.2.

b) Run the Test Scenario with the ICC.

c) Generate a warm reset with a duration of 400 clock-cycles in accordance with ISO/IEC 7816-3:1997, 5.3.3.

d) If the ICC reacts with sending an ATR, signal a transmission error in accordance with ISO/IEC 7816-3:1997, 6.3.3 for at least one character (randomly chosen) of the ATR.

e) Run the Test Scenario with the ICC.

f) Power down the ICC.

7.1.2.3 Test report

Report the signal recordings and the ATR.

7.1.3 Selection of the operation class A

The purpose of this test is to determine the behavior of class B only ICC under Class A operating conditions according to ISO/IEC 7816-3:1997, 4.2.1 and 4.2.2.

NOTE Only to be performed if ICC is class B only!

7.1.3.1 Apparatus

See clause 4.6.2

© ISO/IEC 2001 – All rights reserved
Copyright International Organization for Standardization
Provided by IHS under license with ISO
No reproduction or networking permitted without license from IHS
Not for Resale

7.1.3.2 Procedure

Connect the ICC to the ICC-test-apparatus.

During the following procedure the following contacts shall be continuously monitored and all signal transitions (level and timing) shall be recorded:

Contact
VCC
RST
CLK
I/O

a) Activate and reset the ICC under class A conditions.

b) Wait for at least 1 s.

NOTE A class B only ICC shall not react to a reset under class A conditions.

c) Deactivate the ICC, wait at least 10 ms and activate and reset the ICC under class B conditions.

d) Run the Test Scenario with the ICC.

7.1.3.3 Test report

Report the signal recordings.

7.2 T=0 Protocol

NOTE The subsequent tests are applicable only, if the ICC supports the T=0 protocol.

7.2.1 I/O transmission timing for T=0 protocol

The purpose of this test is to determine the timing of the data transmitted by the ICC (see ISO/IEC 7816-3:1997, 6.3.1, 6.3.2, 8.2).

7.2.1.1 Apparatus

See clause 4.6.2

7.2.1.2 Procedure

Connect the ICC to the ICC-test-apparatus.

During the following procedure the following contacts shall be continuously monitored and all signal transitions (level and timing) as well as the logical content of the communication shall be recorded:

© ISO/IEC 2001 – All rights reserved

Copyright International Organization for Standardization
Provided by IHS under license with ISO
No reproduction or networking permitted without license from IHS
Not for Resale

Contact
VCC
RST
CLK
I/O

a) Run the Test Scenario with the ICC with nominal bit-timing parameters (see ISO/IEC 7816-3:1997, 8.2).

b) Repeat a) with every provided ETU-factor controlled by PPS as described in ISO/IEC 7816-3:1997, 6.5.2 and 7.

c) Repeat a) and b) for all provided applications.

7.2.1.3 Test report

Report the protocol recordings.

7.2.2 I/O character repetition for T=0 protocol

The purpose of this test is to determine use and timing of the character repetition by the ICC (see ISO/IEC 7816-3:1997, 6.3.3).

7.2.2.1 Apparatus

See clause 4.6.2

7.2.2.2 Procedure

Connect the ICC to the ICC-test-apparatus.

a) Run the Test Scenario with the ICC with nominal bit-timing parameters (see ISO/IEC 7816-3:1997, 8.2).

b) During the following part of the procedure the following contacts shall be continuously monitored and all signal transitions (level and timing) as well as the logical content of the communication shall be recorded:

Contact
VCC
RST
CLK
I/O

Copyright International Organization for Standardization
Provided by IHS under license with ISO
No reproduction or networking permitted without license from IHS
Not for Resale
© ISO/IEC 2001 – All rights reserved

c) On each byte sent by the ICC generate five successive error conditions according to ISO/IEC 7816-3:1997, 6.3.3 with minimum duration (1 etu + ε_t) and minimum time between the leading edge of the start bit and the leading edge of the error signal ((10,5 - 0,2) etu + ε_t).

d) On each byte sent by the ICC generate five successive error conditions according to ISO/IEC 7816-3:1997, 6.3.3 with maximum duration (2 $_{etu}$ - ε_t) and maximum time between the leading edge of the start bit and the leading edge of the error signal ((10,5 + 0,2) etu - ε_t).

e) Repeat c) to d) for all provided ATRs (see mode selection in ISO/IEC 7816-3:1997, 6.6.)

NOTE ε_t is the bit timing generation accuracy of the ICC-test-apparatus.

7.2.2.3 Test report

Report the protocol recordings.

7.2.3 I/O reception timing and error signaling for T=0 protocol

The purpose of this test is to determine the reception timing and error signaling of the ICC (see ISO/IEC 7816-3:1997, 6.3.1, 6.3.2, 6.3.3, 8.2).

7.2.3.1 Apparatus

See clause 4.6.2

7.2.3.2 Procedure

Connect the ICC to the ICC-test-apparatus.

During the following procedure the following contacts shall be continuously monitored and all signal transitions (level and timing) as well as the logical content of the communication shall be recorded:

Contact
VCC
RST
CLK
I/O

a) Set the following bit-timing-parameters at the ICC-test-apparatus:

© ISO/IEC 2001 – All rights reserved

Copyright International Organization for Standardization
Provided by IHS under license with ISO
No reproduction or networking permitted without license from IHS
Not for Resale

Parameter	Value	See
Character frame length	maximum (tn = (n + 0,2) etu -ε_t)	ISO/IEC 7816-3:1997, 6.3
Delay between two consecutive characters	9600 etu	Remark: No maximum value defined for the ICC in ISO/IEC 7816-3:1997

b) Run the Test Scenario with the ICC.

c) Generate five consecutive parity errors for a single byte after which a single valid byte is transmitted, followed by five consecutive parity errors for the next single byte in the transmission.

d) Repeat a) to b) with every provided ETU-factor controlled by PPS as described in ISO/IEC 7816-3:1997, 6.5.2.

e) Set the following bit-timing-parameters at the ICC-test-apparatus:

Parameter	Value	See
Character frame length	Minimum (tn = (n - 0,2) etu + ε_t)	ISO/IEC 7816-3:1997, 6.3
Delay between two consecutive characters	12 etu + Q * N/f + ε_t	ISO/IEC 7816-3:1997, 6.3

f) Repeat b) to d).

g) Repeat a) to f) for all provided applications.

7.2.3.3 Test report

Report the protocol recordings.

7.3 T=1 Protocol

NOTE 1 The subsequent test methods are applicable only, if the ICC supports the T=1 protocol.

NOTE 2 Some of the subsequent descriptions of test methods contain scenarios to illustrate the described procedures. Some of these scenarios are based on the assumption, that the ICC contains a transparent file with a length of 36 bytes and the content '31 32 33 34 …54 ', and understands I(0,0)(INF='00 B0 00 00 02') as READ BINARY 2 BYTES.

7.3.1 I/O transmission timing for T=1 protocol

The purpose of this test is to determine the timing of the data transmitted by the ICC (see ISO/IEC 7816-3:1997, 6.3.1, 6.3.2, 6.5.3, 9.3, 9.4, 9.5.2, 9.5.3).

7.3.1.1 Apparatus

See clause 4.6.2

© ISO/IEC 2001 – All rights reserved
Copyright International Organization for Standardization
Provided by IHS under license with ISO
No reproduction or networking permitted without license from IHS
Not for Resale

7.3.1.2 Procedure

During the following procedure the following contacts shall be continuously monitored and all signal transitions (level and timing) as well as the logical content of the communication shall be recorded:

Contact
VCC
RST
CLK
I/O

a) Run a typical T=1 and application specific communication with the ICC for at least 1 s with nominal bit-timing parameters (see ISO/IEC 7816-3:1997, 9.3) and the minimum delay between two consecutive characters defined by N (see ISO/IEC 7816-3:1997, 6.5.3) in the ATR.

b) Repeat a) with every provided ETU-factor controlled by PPS as described in ISO/IEC 7816-3:1997, 6.5.2 and 7.

c) Repeat a) to b) for each provided application.

7.3.1.3 Test report

Report the protocol recordings.

7.3.2 I/O reception timing for T=1 protocol

The purpose of this test is to determine the reception timing of the ICC using the T=1 Protocol (see ISO/IEC 7816-3:1997, 6.3, 9.3, 9.4, 9.5.2, 9.5.3).

7.3.2.1 Apparatus

See clause 4.6.2

7.3.2.2 Procedure

Connect the ICC to the ICC-test-apparatus.

During the following procedure the following contacts shall be continuously monitored and all signal transitions (level and timing) as well as the logical content of the communication shall be recorded:

© ISO/IEC 2001 – All rights reserved

Copyright International Organization for Standardization
Provided by IHS under license with ISO
No reproduction or networking permitted without license from IHS
Not for Resale

Contact
VCC
RST
CLK
I/O

a) Set the following bit-timing-parameters at the ICC-test-apparatus:

Parameter	Value	See
Character frame length	Maximum (tn = (n + 0,2) etu - ε_t)	ISO/IEC 7816-3:1997, 6.3
Guard time	Maximum	ISO/IEC 7816-3:1997, 6.3, 9.5.3
Delay between two consecutive characters	(11 +2^{CWI}) etu - ε_t	ISO/IEC 7816-3:1997, 9.5.3.1

b) Run a typical T=1 and application specific communication with the ICC for at least 1 s.

c) Repeat a) to b) with every provided ETU-factor controlled by PPS as described in ISO/IEC 7816-3:1997, 6.5.2 and 7.

d) Set the following bit-timing-parameters at the ICC-test-apparatus:

Parameter	Value	See
Character frame length	Minimum (tn = (n - 0,2) etu + ε_t)	ISO/IEC 7816-3:1997, 6.3
Guard time	Minimum	ISO/IEC 7816-3:1997, 6.3, 9.5.3
Delay between two consecutive characters	12 etu + Q * N/f + ε_t	ISO/IEC 7816-3:1997, 6.5.3

e) Run a typical T=1 and application specific communication with the ICC for at least 1 s.

f) Repeat d) to e) with every provided ETU-factor controlled by PPS as described in ISO/IEC 7816-3:1997, 6.5.2 and 7.

7.3.2.3 Test report

Report the protocol recordings.

© ISO/IEC 2001 – All rights reserved
Copyright International Organization for Standardization
Provided by IHS under license with ISO
No reproduction or networking permitted without license from IHS
Not for Resale

7.3.3 ICC Character Waiting Time (CWT) behavior

NOTE the notation used in the description of the procedure below is defined in ISO/IEC 7816-4:1995.

The purpose of this test is to determine the reaction of the ICC regarding CWT (see ISO/IEC 7816-3:1997, 6.3, 9.5.3.1).

7.3.3.1 Apparatus

See clause 4.6.2

7.3.3.2 Procedure

Connect the ICC to the ICC-test-apparatus.

a) Be positioned in a transparent file made of at least 2 bytes.

b) Send a block of n bytes to the ICC with the CWT announced in the ATR.

c) Record presence, content and timing of the ICC-response.

Scenario 1 — ICC Character Waiting Time (CWT) behavior

ICC-test-apparatus		ICC
I(0,0)(INF†='00 B0 00 00 02')	⟶	
	⟵	ICC-Response
† INF FIELD of COMMAND is READ BINARY 2 BYTES		

7.3.3.3 Test report

Report the presence, the content and the timing of the ICC-response.

7.3.4 ICC-reaction to IFD exceeding character waiting time (CWT)

The purpose of this test is to determine the reaction of the ICC on the IFD exceeding CWT (see ISO/IEC 7816-3:1997, 4.3.3, 6.3, 9.3).

7.3.4.1 Apparatus

See clause 4.6.2

7.3.4.2 Procedure

Connect the ICC to the ICC-test-apparatus.

a) Send less than n bytes of a block of n bytes to the ICC.

© ISO/IEC 2001 – All rights reserved

Copyright International Organization for Standardization
Provided by IHS under license with ISO
No reproduction or networking permitted without license from IHS
Not for Resale

b) Record the presence, the content and the timing of the ICC response.

NOTE The reaction of the ICC on possible collisions resulting from the interruption should be investigated.

7.3.4.3 Test report

Report the presence, the content and the timing of the ICC-response.

7.3.5 Block Guardtime (BGT)

The purpose of this test is to measure the time between the leading edges of two consecutive characters (BGT) sent in opposite directions (see ISO/IEC 7816-3:1997, 9.5.3.3).

7.3.5.1 Apparatus

See clause 4.6.2

7.3.5.2 Procedure

Connect the ICC to the ICC-test-apparatus.

7.3.5.2.1 Procedure 1

a) Be positioned in a transparent file made of at least 2 bytes.

b) Build a correct I-block

c) Send the I-block to the ICC.

d) The ICC should respond with a correct I-Block according to Rule 1.

Scenario 2 — Block Guardtime (BGT), Procedure 1

ICC-test-apparatus		ICC
I(0,0)(INF = '00 B0 00 00 02')	⟶	
	⟵	I(0,0)(INF = '31 32 90 00')

e) Record the timing starting with the start bit of the last character from the ICC-test-apparatus up to the start bit of the first character of the ICC response.

7.3.5.2.2 Procedure 2

a) Be positioned in a transparent file made of at least 2 bytes.

b) Build an I-block with a wrong EDC (error detection character).

c) Send the I-block to the ICC.

© ISO/IEC 2001 – All rights reserved
Copyright International Organization for Standardization
Provided by IHS under license with ISO
No reproduction or networking permitted without license from IHS
Not for Resale

d) The ICC should send correctly a negative acknowledgement R-block indicating an EDC error in its protocol control byte (PCB) according to Rule 7.1:

Scenario 3 — Block Guardtime (BGT), Procedure 2

ICC-test-apparatus		ICC
I(0,0)(INF = ’00 B0 00 00 02‘)(EDC = Wrong)	⟶	
	⟵	R(0)(PCB=’81’)

e) Record the timing starting with the start bit of the last character from the ICC-test-apparatus up to the start bit of the first character of the ICC response (see 7816-3:1997, 9.5.3.3).

7.3.5.3 Test report

Report the recorded timings.

7.3.6 Block sequencing by the ICC

The purpose of this test is to determine the reaction of the ICC to a transmission error (see ISO/IEC 7816-3:1997, 9.4, 9.7.3).

Erroneous block: block which suffered a transmission error, i.e. one or more characters of wrong parity, or an error in the epilogue.

7.3.6.1 Apparatus

See clause 4.6.2

7.3.6.2 Procedure

Connect the ICC to the ICC-test-apparatus.

7.3.6.2.1 Procedure 1

a) Reset the ICC.

b) Send an erroneous block to the ICC.

c) If the ICC does not start sending a block within BWT or sends R(0) then send the correct block again.

© ISO/IEC 2001 – All rights reserved
Copyright International Organization for Standardization
Provided by IHS under license with ISO
No reproduction or networking permitted without license from IHS
Not for Resale

Scenario 4 — Block sequencing by the ICC, Procedure 1

ICC-test-apparatus		ICC
I(0,0)(INF = ’00’)(EDC = Wrong)	⟶	
	⟵	R(0)(PCB=’81’)
I(0,0)(INF = ’00 B0 00 00 02’)	⟶	
	⟵	I(0,0)(INF = Response)

d) Record the response of the ICC.

7.3.6.2.2 Procedure 2

a) Reset the ICC.

b) Send block I(0,0) to the ICC, with the INF field containing a command supported by the ICC.

c) Wait for the answer of the ICC, and send an erroneous block to the ICC.

d) If the ICC does not start sending within BWT or sends R(1) with bit b1 of the PCB set to 1 then send the erroneous block again up to 3 times.

Scenario 5 — Block sequencing by the ICC, Procedure 2

ICC-test-apparatus		ICC
I(0,0)(INF = ‘00 B0 00 00 02’)	⟶	
	⟵	I(0,0)(INF = ‘31 32 90 00’)
I(1,0)(INF = ‘00’)(EDC = Wrong)	⟶	
	⟵	R(1)(PCB=‘91’)
I(1,0)(INF = ‘00’)(EDC = Wrong)	⟶	
	⟵	R(1)(PCB=‘91’)
I(1,0)(INF = ‘00’)(EDC = Wrong)	⟶	
	⟵	ICC response

e) Record the response of the ICC including whether the ICC stays mute after receiving the last block or not.

Copyright International Organization for Standardization
Provided by IHS under license with ISO
No reproduction or networking permitted without license from IHS
© ISO/IEC 2001 – All rights reserved
Not for Resale

7.3.6.2.3 Procedure 3 (with chaining)

a) Reset the ICC.

b) Send block I(0,1) to the ICC, with the INF field containing a command needing chaining supported by the ICC.

c) Wait for the answer of the ICC, and send an erroneous block to the ICC.

d) If the ICC does not start in BWT or sends R(1) with bit b1 of the PCB set to 1 then send the erroneous block again.

Scenario 6 — Block sequencing by the ICC, Procedure 3 (with chaining)

ICC-test-apparatus		ICC
I(0,1)(INF = Beginning of the command)	⟶	
	⟵	R(1)(PCB='90')
I(1,0)(INF = End of the command)(EDC = Wrong)	⟶	
	⟵	R(1)(PCB='91')
I(1,0)(INF = End of the command)(EDC = Wrong)	⟶	
	⟵	R(1)(PCB='91')
I(1,0)(INF = End of the command)	⟶	
	⟵	ICC Response

e) Record the reaction of the ICC.

7.3.6.3 Test report

Report the reaction of the ICC for each procedure.

7.3.7 Reactions of the ICC to protocol errors

The purpose of this test is to analyze the reaction of the ICC to a protocol error (see ISO/IEC 7816-3:1997, 9.7.3).

Faulty block: Invalid block with unknown PCB encoding, or known PCB encoding with wrong N(S), N(R) or M, or PCB not matching with the expected block.

7.3.7.1 Apparatus

See clause 4.6.2

© ISO/IEC 2001 – All rights reserved

Copyright International Organization for Standardization
Provided by IHS under license with ISO
No reproduction or networking permitted without license from IHS
Not for Resale

7.3.7.2 Procedure

Connect the ICC to the ICC-test-apparatus.

a) Reset the ICC.

b) Send a faulty block to the ICC.

c) If the ICC does not start sending a block within BWT or sends R(0) with bit b2 of the PCB set to 1 then send the correct block. If the ICC remains mute the test ends at this point.

Scenario 7 — Reactions of the ICC to protocol errors

ICC-test-apparatus		ICC
I(0,0)(INF = '00 B0 00 00 02')(PCB=Wrong)	⟶	
	⟵	R(0)(PCB='82') or mute ICC
I(0,0)(INF = '00 B0 00 00 02')	⟶	
	⟵	ICC Response

This test may be repeated with different types of wrong PCB.

7.3.7.3 Test report

Report the reaction of the ICC.

7.3.8 Recovery of a transmission error by the ICC

The purpose of this test is to analyze the ICC reaction to a negative acknowledgement (see ISO/IEC 7816-3:1997).

Negative acknowledgement: R-Block with N(R) out of sequence.

7.3.8.1 Apparatus

See clause 4.6.2

7.3.8.2 Procedure

Connect the ICC to the ICC-test-apparatus.

a) Reset the ICC.

b) Send block I(0,0) to the ICC, with the INF field containing a command supported by the ICC (Read Binary of two bytes without offset) and wait for the answer contained in block I(0,0) or I(1,0).

c) Send R(0) or R(1) to the ICC. Get the response from the ICC.

© ISO/IEC 2001 – All rights reserved
Copyright International Organization for Standardization
Provided by IHS under license with ISO
No reproduction or networking permitted without license from IHS
Not for Resale

d) The ICC should repeat the I-block.

Scenario 8 — Recovery of a transmission error by the ICC

ICC-test-apparatus		ICC
I(0,0)(INF = '00 B0 00 00 02')	⟶	
	⟵	I(0,0)(INF = '31 32 90 00')
R(0)(PCB='81')	⟶	
	⟵	I(0,0)(INF = '31 32 90 00')
I(1,0)(INF = '00 B0 00 00 02')	⟶	
	⟵	I(1,0)(INF = '31 32 90 00')
R(1)(PCB='91')	⟶	
	⟵	I(1,0)(INF = '31 32 90 00')

7.3.8.3 Test report

Report the reaction of the ICC.

7.3.9 Resynchronization

The purpose of this test is to check the behavior of the ICC after a resynchronization (see ISO/IEC 7816-3:1997, 9.7.3).

7.3.9.1 Apparatus

See clause 4.6.2

7.3.9.2 Procedure

Connect the ICC to the ICC-test-apparatus.

a) Reset the ICC.

b) Exchange two I-blocks in each direction with a command supported by the ICC.

c) Send 2 negative acknowledgement blocks and then an S(RESYNCH request) block to the ICC.

d) Record the response of the ICC

e) If the ICC sends S(RESYNCH response), send I(0,0) block.

--`,,```,,,,````-`-`,,`,,`,`,,`---
© ISO/IEC 2001 – All rights reserved
Copyright International Organization for Standardization
Provided by IHS under license with ISO
No reproduction or networking permitted without license from IHS
Not for Resale

f) Record the response of the ICC

Scenario 9 — Resynchronization

ICC-test-apparatus		ICC
I(0,0)(INF = '00 B0 00 00 02')	→	
	←	I(0,0)(INF = '31 32 90 00')
I(1,0)(INF = '00 B0 00 00 03')	→	
	←	I(1,0)(INF = '31 32 33 90 00')
R(1)(PCB='91')	→	
	←	I(1,0)(INF = '31 32 33 90 00')
R(1)(PCB='91')	→	
	←	I(1,0)(INF = '31 32 33 90 00')
S(RESYNCH request)	→	
	←	S(RESYNCH response)
I(0,0)	→	
	←	ICC response

7.3.9.3 Test report

Report the reaction of the ICC.

7.3.10 IFSD negotiation

The purpose of this test is to check the IFSD negotiation (see ISO/IEC 7816-3:1997, 9.5.2).

7.3.10.1 Apparatus

See clause 4.6.2

7.3.10.2 Procedure

Connect the ICC to the ICC-test-apparatus.

© ISO/IEC 2001 – All rights reserved
Copyright International Organization for Standardization
Provided by IHS under license with ISO
No reproduction or networking permitted without license from IHS
Not for Resale

a) Reset the ICC.

b) Exchange one I-block in each direction with a command supported by the ICC.

c) Send block S(IFS request) to the ICC.

Scenario 10 — IFSD negotiation

ICC-test-apparatus		ICC
I(0,0)(INF = '00 B0 00 00 02')	⟶	
	⟵	I(0,0)(INF = '31 32 90 00')
S(IFS request)	⟶	
	⟵	ICC Response

d) Record the response of the ICC.

7.3.10.3 Test report

Report the response of the ICC.

7.3.11 Abortion by the IFD

The purpose of this test is to check the chaining abortion behavior of the ICC (see ISO/IEC 7816-3:1997, 9.7.3).

7.3.11.1 Apparatus

See clause 4.6.2

7.3.11.2 Procedure

a) Reset the ICC.

b) Exchange one I-block in each direction with a command supported by the ICC.

c) Send block I(1,1) to the ICC, with the INF field containing a command needing chaining supported by the ICC.

d) Wait for the answer of the ICC, and send S(ABORT request).

© ISO/IEC 2001 – All rights reserved

Copyright International Organization for Standardization
Provided by IHS under license with ISO
No reproduction or networking permitted without license from IHS
Not for Resale

Scenario 11 — Abortion by the IFD

ICC-test-apparatus		ICC
I(0,0)(INF = ‘00 B0 00 00 02’)	⟶	
	⟵	I(0,0)(INF = ‘31 32 90 00’)
I(1,1)(INF = "00-B0")	⟶	
	⟵	R(0)(PCB="80")
S(ABORT request)	⟶	
	⟵	ICC response

e) Record the presence and content of a response of the ICC.

7.3.11.3 Test report

Report the presence and content of a response of the ICC.

8 Test methods for physical and electrical characteristics of the IFD

8.1 Activation of contacts

The purpose of this test is to determine the sequence of the activation of contacts during the activation of the ICC activation phase (see ISO/IEC 7816-3:1997, 5.2, 5.3.1, 5.3.2).

8.1.1 Apparatus

See clause 4.6.3

8.1.2 Procedure

Connect the IFD to the IFD-test-apparatus.

a) Measure level and timing of the signals on the IFD contacts for at least 1 s.

b) Activate the IFD.

c) Measure level and timing of the signals on the IFD contacts for at least 1 s.

NOTE The activities necessary to ‘Activate the IFD’ are very dependent on the construction of the IFD. They shall include all activities necessary until the IFD provides the ‘Cold reset of the card’ procedure as defined in ISO/IEC 7816-3:1997, 5.2.

--`,,```,,,,````-`-`,,`,,`,`,,`---

© ISO/IEC 2001 – All rights reserved
Copyright International Organization for Standardization
Provided by IHS under license with ISO
No reproduction or networking permitted without license from IHS
Not for Resale

8.1.3 Test report

Report the recorded levels and timing of the signals on all IFD contacts.

Due to the missing definition of delay timings in ISO/IEC 7816-3:1997 the value of 20 ns shall be used as the minimum delay between two subsequent signal transitions during the activation of contacts until a different value is defined in ISO/IEC 7816-3:1997.

8.2 VCC contact

The purpose of this test is to measure the voltage provided by the IFD on the VCC contact (see ISO/IEC 7816-3:1997, 4.3.2).

8.2.1 Apparatus

See clause 4.6.3

8.2.2 Procedure

Connect the IFD to the IFD-test-apparatus.

a) Set the following parameters in the IFD-test-apparatus (begin with lowest voltage class supported by the IFD):

Signal	Setting
I_{CC}	I_{CC} min

b) Activate the IFD.

c) The IFD resets the IFD-test-apparatus (ISO/IEC 7816-3:1997, 5.3.2).

d) Generate an ATR with the following parameters:

Parameter	Setting	See
FI	lowest available value	ISO/IEC 7816-3:1997, 6.5.2
X	11	ISO/IEC 7816-3:1997, 6.5.5

e) If the IFD generates a PPS then response the requested parameters.

f) Let the IFD run the Test Scenario with the IFD-test-apparatus. During the whole communication generate current spikes randomly from 1 kHz to 100 kHz within the range defined in ISO/IEC 7816-3:1997, 4.3.2. During this communication the following signals shall be continuously monitored and the following values determined:

--`,,```,,,,````-`-`,,`,,`,`,,`---
© ISO/IEC 2001 – All rights reserved
Copyright International Organization for Standardization
Provided by IHS under license with ISO
No reproduction or networking permitted without license from IHS
Not for Resale

Characteristic	Value
V_{CC}	V_{CC} min, V_{CC} max

g) If the IFD generates a clock stop (see ISO/IEC 7816-3:1997, 5.3.4), set parameter I_{CC} at the IFD-test-apparatus to I_{CC} max for the time of the clock stop. During the clock stop the following signals shall be continuously monitored and the following values determined:

Characteristic	Value
V_{CC}	V_{CC} min, V_{CC} max

h) Deactivate the IFD.

i) Set the following parameters in the IFD-test-apparatus (begin with lowest voltage class supported by the IFD):

Parameter	Setting
I_{CC}	I_{CC} max

j) Activate the IFD.

k) The IFD resets the IFD-test-apparatus (ISO/IEC 7816-3:1997, 5.3.2).

l) Generate an ATR with the following parameters:

Parameter	Setting	See
FI	highest available value	ISO/IEC 7816-3:1997, 6.5.2
X	11	ISO/IEC 7816-3:1997, 6.5.5

m) If the IFD generates a PPS then response the requested parameters.

n) Let the IFD run the Test Scenario with the IFD-test-apparatus. During the whole communication generate current spikes randomly from 1 kHz to 100 kHz within the range defined in ISO/IEC 7816-3:1997, 4.3.2. During this communication the following signals shall be continuously monitored and the following values determined:

Characteristic	Value
V_{CC}	V_{CC} min, V_{CC} max

Copyright International Organization for Standardization
Provided by IHS under license with ISO
No reproduction or networking permitted without license from IHS
Not for Resale
© ISO/IEC 2001 – All rights reserved

o) If the IFD generates a clock stop (see ISO/IEC 7816-3:1997, 5.3.4), set parameter I_{CC} at the IFD-test-apparatus to I_{CC} max for the time of the clock stop. During the clock stop the following signals shall be continuously monitored and the following values determined:

Characteristic	Value
V_{CC}	V_{CC} min, V_{CC} max

p) Deactivate the IFD.

q) Repeat step a) to p) for all voltage classes supported by the IFD.

8.2.3 Test report

Report the determined values V_{CC} min, V_{CC} max for all scenarios above together with the measurement conditions (I_{CC} and FI).

8.3 I/O contact

The purpose of this test is to measure the contact capacitance of the I/O contact, the I/O output voltages (V_{OH}, V_{OL}) under normal operating conditions (I_{OL} max/min and I_{OH} max/min), I/O t_R and t_F during transmission mode of the IFD and the I/O input current (I_{IL}) during reception mode of the IFD.

8.3.1 Apparatus

See clause 4.6.3

8.3.2 Procedure

Connect the IFD to the IFD-test-apparatus.

a) Measure the capacitance C_{IO} of the I/O-contact.

b) Set the following parameters in the IFD-test-apparatus (begin with lowest voltage class supported by the IFD):

--`,,```,,,,````-`-`,,`,,`,`,,`---
© ISO/IEC 2001 – All rights reserved
Copyright International Organization for Standardization
Provided by IHS under license with ISO
No reproduction or networking permitted without license from IHS
Not for Resale

Parameter	Setting
I_{CC}	I_{CC} max
I_{IH}	I_{IH} max
I_{IL}	I_{IL} max
V_{OH}	V_{OH} min
V_{OL}	V_{OL} max
t_R	t_R min
t_F	t_F min

c) Activate the IFD.

d) The IFD resets the IFD-test-apparatus (ISO/IEC 7816-3:1997, 5.3.2).

e) Generate an ATR.

f) Let the IFD run the Test Scenario with the IFD-test-apparatus. During this communication the following characteristics shall be continuously monitored and the following values determined:

Characteristic	Value
V_{IH}	V_{IH} min, V_{IH} max
V_{IL}	V_{IL} min, V_{IL} max
I_{OH}	I_{OH} max
I_{OL}	I_{OL} max
t_R	t_R max
t_F	t_F max

g) Deactivate the IFD.

h) Set the following parameters in the IFD-test-apparatus (begin with lowest voltage class supported by the IFD):

© ISO/IEC 2001 – All rights reserved
Copyright International Organization for Standardization
Provided by IHS under license with ISO
No reproduction or networking permitted without license from IHS
Not for Resale

Parameter	Setting
I_{CC}	I_{CC} max
I_{IH}	I_{IH} min
I_{IL}	I_{IL} min
V_{OH}	V_{OH} min
V_{OL}	V_{OL} min
t_R	t_R max
t_F	t_F max

i) Reset the ICC.

j) Run the Test Scenario. During this communication the following characteristics shall be continuously monitored and the following values determined:

Characteristic	Value
V_{IH}	V_{IH} min, V_{IH} max
V_{IL}	V_{IL} min, V_{IL} max
I_{OH}	I_{OH} max
I_{OL}	I_{OL} max
t_R	t_R max
t_F	t_F max

k) Deactivate the IFD.

l) Repeat step b) to k) for all supported voltage classes.

8.3.3 Test report

The test report shall state the capacitance of the I/O-contact, the values determined in the procedure and whether all communications were in conformance with ISO/IEC 7816-3:1997.

8.4 CLK contact

The purpose of this test is to determine the characteristics of the CLK signal (see ISO/IEC 7816-3:1997, 4.3.4)

© ISO/IEC 2001 – All rights reserved

Copyright International Organization for Standardization
Provided by IHS under license with ISO
No reproduction or networking permitted without license from IHS
Not for Resale

8.4.1 Apparatus

See clause 4.6.3

8.4.2 Procedure

Connect the IFD to the IFD-test-apparatus.

a) Set the following parameters in the IFD-test-apparatus (begin with lowest voltage class supported by the IFD):

Parameter	Setting
I_{CC}	I_{CC} max
I_{IH}	I_{IH} max
I_{IL}	I_{IL} max

b) Activate the IFD.

c) The IFD resets the IFD-test-apparatus (ISO/IEC 7816-3:1997, 5.3.2).

d) Generate an ATR with the following parameters:

Parameter	Setting	See
FI	FI max	ISO/IEC 7816-3:1997, 6.5.2
DI	DI min	ISO/IEC 7816-3:1997, 6.5.2

e) If the IFD generates a PPS then response the requested parameters.

f) Let the IFD run the Test Scenario with the IFD-test-apparatus. During this communication the following characteristics shall be continuously monitored and the following values determined:

Characteristic (CLK)	Value
V_{IH}	V_{IH} min, V_{IH} max
V_{IL}	V_{IL} min, V_{IL} max
t_R	t_R max
t_F	t_F max
Duty Cycle	min, max

© ISO/IEC 2001 – All rights reserved
Copyright International Organization for Standardization
Provided by IHS under license with ISO
No reproduction or networking permitted without license from IHS
Not for Resale

g) Deactivate the IFD.

h) Set the following parameters in the IFD-test-apparatus (begin with lowest voltage class supported by the IFD):

Parameter	Setting
I_{CC}	0 mA
I_{IH}	I_{IH} min
I_{IL}	I_{IL} min

i) Activate the IFD.

j) The IFD resets the IFD-test-apparatus (ISO/IEC 7816-3:1997, 5.3.2).

k) Generate an ATR with the following parameters:

Parameter	Setting	See
FI	FI max	ISO/IEC 7816-3:1997, 6.5.2
DI	DI min	ISO/IEC 7816-3:1997, 6.5.2

l) If the IFD generates a PPS then response the requested parameters.

m) Let the IFD run the Test Scenario with the IFD-test-apparatus. During this communication the following characteristics shall be continuously monitored and the following values determined:

Characteristic (CLK)	Value
V_{IH}	V_{IH} min, V_{IH} max
V_{IL}	V_{IL} min, V_{IL} max
t_R	t_R max
t_F	t_F max
Duty Cycle	min, max

n) Deactivate the IFD.

o) Repeat step a) to n) for all supported voltage classes.

--`,,```,,,,````-`-`,,`,,`,`,,`---
© ISO/IEC 2001 – All rights reserved
Copyright International Organization for Standardization
Provided by IHS under license with ISO
No reproduction or networking permitted without license from IHS
Not for Resale

8.4.3 Test report

The test report shall state the values determined in the procedure, the corresponding parameters and whether all communications were in conformance with ISO/IEC 7816-3:1997.

8.5 RST contact

The purpose of this test is to determine the characteristics of the RST signal (see ISO/IEC 7816-3:1997, 4.3.4).

8.5.1 Apparatus

See clause 4.6.3

8.5.2 Procedure

Connect the IFD to the IFD-test-apparatus.

a) Set the following parameters in the IFD-test-apparatus (begin with lowest voltage class supported by the IFD):

Parameter	Setting
I_{CC}	I_{CC} max
I_{IH}	I_{IH} max
I_{IL}	I_{IL} max

b) Activate the IFD.

c) The IFD resets the IFD-test-apparatus (ISO/IEC 7816-3:1997, 5.3.2).

d) Generate an ATR.

e) If the IFD generates a PPS then response the requested parameters.

f) Let the IFD run the Test Scenario with the IFD-test-apparatus. During this communication the following characteristics shall be continuously monitored and the following values determined:

Characteristic (RST)	Value
V_{IH}	V_{IH} min, V_{IH} max
V_{IL}	V_{IL} min, V_{IL} max
t_R	t_R max
t_F	t_F max

g) Deactivate the IFD.

--`,,```,,,,````-`-`,,`,,`,`,,`---

© ISO/IEC 2001 – All rights reserved
Copyright International Organization for Standardization
Provided by IHS under license with ISO
No reproduction or networking permitted without license from IHS
Not for Resale

h) Set the following parameters in the IFD-test-apparatus (begin with lowest voltage class supported by the IFD):

Parameter	Setting
I_{CC}	0 mA
I_{IH}	I_{IH} min
I_{IL}	I_{IL} min

i) Activate the IFD.

j) The IFD resets the IFD-test-apparatus (ISO/IEC 7816-3:1997, 5.3.2).

k) Generate an ATR.

l) If the IFD generates a PPS then response the requested parameters.

m) Let the IFD run the Test Scenario with the IFD-test-apparatus. During this communication the following characteristics shall be continuously monitored and the following values determined:

Characteristic (RST)	Value
V_{IH}	V_{IH} min, V_{IH} max
V_{IL}	V_{IL} min, V_{IL} max
t_R	t_R max
t_F	t_F max

n) Deactivate the IFD.

o) Repeat step a) to n) for all supported voltage classes.

8.5.3 Test report

Report the values determined in the procedure and the corresponding parameters.

8.6 VPP contact

This test applies if the requirement for V_{PP} is required by the IFD application (see ISO/IEC 7816-3:1997, 4.3.6). If the supply of V_{PP} is required by the application, the IFD-test-apparatus shall request programming state during an application and protocol dependent communication, apply I_{PP} max and measure V_{PP}.

8.7 Deactivation of the contacts

The purpose of this test is to determine the deactivation sequence of the contacts by the IFD (see ISO/IEC 7816-3:1997, 5.4)**.**

© ISO/IEC 2001 – All rights reserved

Copyright International Organization for Standardization
Provided by IHS under license with ISO
No reproduction or networking permitted without license from IHS
Not for Resale

8.7.1 Apparatus

See clause 4.6.3

8.7.2 Procedure

Connect the IFD to the IFD-test-apparatus.

a) Activate the IFD.

b) The IFD resets the IFD-test-apparatus (ISO/IEC 7816-3:1997, 5.3.2).

c) Generate an ATR.

d) If the IFD generates a PPS then response the requested parameters.

e) Let the IFD run the Test Scenario with the IFD-test-apparatus. For every deactivation procedure during or at the end of the communication, starting with the falling edge of the RST-signal, continuously monitor the following contacts and record voltage and timing of all signal transitions on these contacts:

Parameter
VCC
VPP
RST
CLK
I/O

8.7.3 Test report

Report the recorded levels and timing of the signals on all IFD contacts.

NOTE Due to the missing definition of delay timings in ISO/IEC 7816-3:1997 the value of 20 ns shall be used as the minimum delay between two subsequent signal transitions during the activation of contacts until a different value is defined in ISO/IEC 7816-3:1997.

9 Test methods for logical operations of the IFD

9.1 Answer to Reset (ATR)

9.1.1 ICC Reset (cold reset)

The purpose of this test is to determine the cold reset provided by the IFD (see ISO/IEC 7816-3:1997, 5.3.2).

--`,,```,,,,````-`-`,,`,,`,`,,`---

© ISO/IEC 2001 – All rights reserved
Copyright International Organization for Standardization
Provided by IHS under license with ISO
No reproduction or networking permitted without license from IHS
Not for Resale

9.1.1.1 Apparatus

See clause 4.6.3

9.1.1.2 Procedure

Connect the IFD to the IFD-test-apparatus.

a) Activate the IFD.

b) Continuously monitor the RST signal and determine the timing (relative to the CLK-signal) and voltage of all transitions on the RST contact for at least 1 s.

9.1.1.3 Test report

Report voltage and timing of all signal transitions on the RST contact.

9.1.2 ICC Reset (warm reset)

The purpose of this test is to determine the warm reset provided by the IFD (see ISO/IEC 7816-3:1997, 5.3.3).

9.1.2.1 Apparatus

See clause 4.6.3

9.1.2.2 Procedure

Connect the IFD to the IFD-test-apparatus.

a) Activate the IFD.

b) The IFD resets the IFD-test-apparatus (ISO/IEC 7816-3:1997, 5.3.2).

c) Generate an ATR.

d) If the IFD generates a PPS then response the requested parameters.

e) Let the IFD run the Test Scenario with the IFD-test-apparatus. During this communication the RST signal shall be continuously monitored and voltage and timing (relative to the CLK-signal) of any signal transition recorded.

9.1.2.3 Test report

Report the voltage and timing of all warm resets provided by the IFD, if any.

9.2 T=0 Protocol

NOTE The subsequent tests are applicable only, if the IFD supports the T=0 protocol.

9.2.1 I/O transmission timing for T=0 protocol

The purpose of this test is to determine the timing of the data transmitted by the IFD

--`,,```,,,,````-`-`,,`,,`,`,,`---

© ISO/IEC 2001 – All rights reserved

Copyright International Organization for Standardization
Provided by IHS under license with ISO
No reproduction or networking permitted without license from IHS
Not for Resale

9.2.1.1 Apparatus

See clause 4.6.3

9.2.1.2 Procedure

Connect the IFD to the IFD-test-apparatus.

During the following procedure the following contacts shall be continuously monitored and all signal transitions (level and timing) as well as the logical content of the communication shall be recorded:

Contact
VCC
RST
CLK
I/O

a) Set the maximum guardtime at the IFD by setting the Parameter N in the ATR to 254 (see ISO/IEC 7816-3:1997, 6.5.3).

b) Let the IFD run the Test Scenario.

c) Repeat a) to b) with every provided ETU-factor controlled by the IFD. Switch the value via mode selection (see ISO/IEC 7816-3:1997, 6.6).

d) Repeat a) and c) for all supported applications. Select the application by changing the ATR and mode selection as described in ISO/IEC 7816-3:1997, 6.6 and 7.

9.2.1.3 Test report

Report the protocol recordings.

9.2.2 I/O character repetition for T=0 protocol

The purpose of this test is to determine use and timing of the character repetition by the IFD (see ISO/IEC 7816-3:1997, 6.3.3).

9.2.2.1 Apparatus

See clause 4.6.3

9.2.2.2 Procedure

Connect the IFD to the IFD-test-apparatus.

a) Let the IFD run the Test Scenario.

© ISO/IEC 2001 – All rights reserved
Copyright International Organization for Standardization
Provided by IHS under license with ISO
No reproduction or networking permitted without license from IHS
Not for Resale

b) During the following part of the procedure the following contacts shall be continuously monitored and all signal transitions (level and timing) as well as the logical content of the communication shall be recorded:

Contact
VCC
RST
CLK
I/O

c) Generate 3 successive times at each byte received from the IFD an error signal in accordance to ISO/IEC 7816-3:1997, 6.3.3 with minimum duration (1 etu + ε_t) and minimum time between the leading edge of the start bit and the leading edge of the error signal ((10,5 - 0,2) etu + ε_t).

d) Generate 3 successive times at each byte received from the IFD an error signal in accordance to ISO/IEC 7816-3:1997, 6.3.3 with maximum duration (2 etu - ε_t) and maximum time between the leading edge of the start bit and the leading edge of the error signal ((10,5 + 0,2) etu - ε_t).

e) Repeat c) to d) for all supported ETU-factors controlled by the IFD via mode selection (see ISO/IEC 7816-3:1997, 6.6

f) Repeat c) to e) but generate the error signal 5 instead of 3 consecutive times.

NOTE ε_t is the bit timing generation accuracy of the IFD-test-apparatus.

9.2.2.3 Test report

Report the protocol recordings.

As an addition to ISO/IEC 7816-3:1997 the IFD shall reject the ICC (IFD-test-apparatus) in step f). It is necessary to define a minimal and maximal repetition value (min. = 3; max. = 5) for the IFD to prevent a lock-up.

9.2.3 I/O reception timing and error signaling for T=0 protocol

The purpose of this test is to determine the reception timing and Error signaling of the IFD (see ISO/IEC 7816-3:1997, 8.2).

9.2.3.1 Apparatus

See clause 4.6.3

9.2.3.2 Procedure

Connect the IFD to the IFD-test-apparatus.

During the following procedure the following contacts shall be continuously monitored and all signal transitions (level and timing) as well as the logical content of the communication shall be recorded:

© ISO/IEC 2001 – All rights reserved

Copyright International Organization for Standardization
Provided by IHS under license with ISO
No reproduction or networking permitted without license from IHS
Not for Resale

Contact
VCC
RST
CLK
I/O

a) Set the following bit-timing-parameters at the IFD-test-apparatus:

Parameter	Value	See
Character frame length	maximum (tn = (n + 0,2) etu -ε_t)	ISO/IEC 7816-3:1997, 6.3
Delay between two consecutive characters	960 $\times$ 255 $\times$ (Fi/f)	ISO/IEC 7816-3:1997, 6.3

b) Let the IFD run the Test Scenario.

c) Generate three consecutive parity errors for every byte.

d) Repeat a) to c) with every provided ETU-factor controlled by IFD. Switch via mode selection (see ISO/IEC 7816-3:1997, 6.6)

e) Set the following bit-timing-parameters at the ICC-test-apparatus:

Parameter	Value	See
Character frame length	Minimum (tn = (n - 0,2) etu + ε_t)	ISO/IEC 7816-3:1997, 6.3, 6.5.3
Delay between two consecutive characters	12 etu + ε_t	ISO/IEC 7816-3:1997, 6.3, 6.5.3

f) Repeat b) to d).

g) Repeat a) to f) but generate five consecutive parity errors for every byte instead of three.

9.2.3.3 Test report:

Report the protocol recordings.

As an addition to ISO/IEC 7816-3:1997(E) the IFD shall reject the ICC (IFD-test-apparatus) in step f). It is necessary to define a minimal and maximal repetition value (min. = 3; max. = 5) for the IFD to prevent a lock-up.

Copyright International Organization for Standardization
Provided by IHS under license with ISO
No reproduction or networking permitted without license from IHS
Not for Resale
© ISO/IEC 2001 – All rights reserved

9.3 T=1 Protocol

NOTE 1 The subsequent tests are applicable only, if the IFD supports the T=1 protocol.

NOTE 2 Some of the subsequent descriptions of test methods contain scenarios to illustrate the described procedures. Some of these scenarios are based on the assumption, that the ICC-test-apparatus contains a transparent file with a length of 36 bytes and the content '31 32 33 34 …54 ', and understands I(0,0)(INF='00 B0 00 00 02') as READ BINARY 2 BYTES.

9.3.1 I/O transmission timing for T=1 protocol

The purpose of this test is to determine the timing of the data transmitted by the IFD (see ISO/IEC 7816-3:1997, 6.3.1, 6.3.2, 6.5.3, 9.5.3).

9.3.1.1 Apparatus

See clause 4.6.3

9.3.1.2 Procedure

Connect the IFD to the IFD-test-apparatus.

During the following procedure the following contacts shall be continuously monitored and all signal transitions (level and timing) as well as the logical content of the communication shall be recorded:

Contact
VCC
RST
CLK
I/O

a) Let the IFD run a typical T=1 and application specific communication with a guardtime defined by setting N in the ATR to 254 (see ISO/IEC 7816-3:1997, 6.5.3).

b) Repeat a) with N set to 0.

c) Repeat a) with N set to 12.

d) Repeat a) to c) with every supported ETU-factor controlled by IFD. Switch the value via mode selection (see ISO/IEC 7816-3:1997, 6.6).

e) Repeat a) and d) with N set to 255.

9.3.1.3 Test report

Report the protocol recordings.

© ISO/IEC 2001 – All rights reserved

Copyright International Organization for Standardization
Provided by IHS under license with ISO
No reproduction or networking permitted without license from IHS
Not for Resale

9.3.2 I/O reception timing for T=1 protocol

The purpose of this test is to determine the reception timing of the IFD using the T=1 Protocol (see ISO/IEC 7816-3:1997, 6.3 and 9.5.3).

9.3.2.1 Apparatus

See clause 4.6.3

9.3.2.2 Procedure

Connect the IFD to the IFD-test-apparatus.

During the following procedure the following contacts shall be continuously monitored and all signal transitions (level and timing) as well as the logical content of the communication shall be recorded:

Contact
VCC
RST
CLK
I/O

a) Set the following bit-timing-parameters at the IFD-test-apparatus:

Parameter	Value	See
Character frame length	Maximum (tn = (n + 0,2) etu - ε_t)	ISO/IEC 7816-3:1997, 6.3
Block response time (BRT)	Maximum	ISO/IEC 7816-3:1997, 9.5.3.3
Delay between two consecutive characters	Maximum ((11 +2^{CWI}) etu - ε_t)	ISO/IEC 7816-3:1997, 9.5.3.1
Delay between two consecutive characters	Maximum (11 etu + $2^{BWI} \times 960 \times 372/f$ s - ε_t)	ISO/IEC 7816-3:1997, 9.5.3.2
NOTE The Block response time is defined as the time between the leading edge of the last character of the block received and the leading edge of the first character of the next block sent.		

b) Let the IFD run a typical T=1 and application specific communication.

c) Repeat a) with every provided ETU-factor controlled by the IFD. Switch the value using mode selection (see ISO/IEC 7816-3:1997, 6.6).

d) Set the following bit-timing-parameters at the ICC-test-apparatus:

Copyright International Organization for Standardization
Provided by IHS under license with ISO
No reproduction or networking permitted without license from IHS
© ISO/IEC 2001 – All rights reserved
Not for Resale

Parameter	Value	See
Character frame length	Minimum (tn = (n - 0,2) etu + ε_t)	ISO/IEC 7816-3:1997, 6.3
Block response time (BRT)	Minimum	ISO/IEC 7816-3:1997, 9.5.3.3
Delay between two consecutive characters	Minimum (11 etu + ε_t)	ISO/IEC ISO/IEC 7816-3:1997:1997, 9.5.3.1
Delay between the leading edges of two consecutive characters	Minimum (22 etu + ε_t)	ISO/IEC ISO/IEC 7816-3:1997:1997, 9.5.3.2
NOTE The Block response time is defined as the time between the leading edge of the last character of the block received and the leading edge of the first character of the next block sent.		

e) Run a typical T=1 and application specific communication with the ICC for at least 1 s.

f) Repeat d) with every provided ETU-factor controlled by the IFD. Switch the value using mode selection (see ISO/IEC 7816-3:1997, 6.6).

9.3.2.3 Test report

Report the protocol recordings.

9.3.3 IFD Character Waiting Time (CWT) behavior

The purpose of this test is to determine the reactions of the IFD towards an ICC reacting within CWT (see ISO/IEC 7816-3:1997).

9.3.3.1 Apparatus

See clause 4.6.3

9.3.3.2 Procedure

Connect the IFD to the IFD-test-apparatus.

a) The IFD sends an I-block.

b) Measure the time between the startbits of each pair of consecutive characters forming the I-block.

Scenario 12 — IFD Character Waiting Time (CWT) behavior

IFD		IFD-test-apparatus
I(0,0)(INF[†]='00 B0 00 00 02')	——————→	
[†] INF FIELD of COMMAND is READ BINARY 2 BYTES		

© ISO/IEC 2001 – All rights reserved

Copyright International Organization for Standardization
Provided by IHS under license with ISO
No reproduction or networking permitted without license from IHS
Not for Resale

9.3.3.3 Test report

Report the timing of the IFD-response obtained in procedure step b).

9.3.4 IFD-reaction to ICC exceeding CWT

The purpose of this test is to determine the reactions of the IFD towards an ICC exceeding CWT (see ISO/IEC 7816-3:1997, 4.3.3, 6.3, 9.3).

9.3.4.1 Apparatus

See clause 4.6.3

9.3.4.2 Procedure

Connect the IFD to the IFD-test-apparatus.

a) The IFD sends an I-block to the IFD-test-apparatus. The IFD-test-apparatus sends less than n bytes of a block of n bytes to the IFD.

b) Record the presence, the content and the timing of the IFD-response.

NOTE The reaction of the IFD on possible collisions resulting from the interruption should be investigated.

Scenario 13 — IFD-reaction to ICC exceeding CWT

IFD		IFD-test-apparatus
I(0,0)(INF†=‘00 B0 00 00 02’)	⟶	
	⟵	I(0,0)(INF=*’incomplete’*)
IFD Response	⟶	
† INF FIELD of COMMAND is READ BINARY 2 BYTES		

9.3.4.3 Test report

Report the presence, the content and the timing of the IFD-response.

9.3.5 Block Guardtime (BGT)

The purpose of this test is to measure the time between the leading edges of two consecutive characters sent in opposite directions (see ISO/IEC 7816-3:1997).

Copyright International Organization for Standardization
Provided by IHS under license with ISO
No reproduction or networking permitted without license from IHS
Not for Resale
© ISO/IEC 2001 – All rights reserved

9.3.5.1 Apparatus

See clause 4.6.3

9.3.5.2 Procedure

Connect the IFD to the IFD-test-apparatus.

a) The IFD sends an I-block.

b) The IFD-test-apparatus sends a negative acknowledgement R-block.

c) The IFD repeats the I-block previously sent.

d) Measure and record the time between the leading edge of the last character of the R-block and the leading edge of the first character of the second I-block.

Scenario 14 — Block Guardtime (BGT)

IFD		IFD-test-apparatus
I(0,0)(INF = '00 B0 00 00 02')	——————→	
	←——————	R(0)(PCB='81')
I(0,0)(INF = '00 B0 00 00 02')	——————→	

9.3.5.3 Test report

Report the timing obtained under procedure step d).

9.3.6 Block sequencing by the IFD

The purpose of this test is to determine the reactions of the IFD to transmission errors (see ISO/IEC 7816-3:1997).

9.3.6.1 Apparatus

See clause 4.6.3

9.3.6.2 Procedure

Connect the IFD to the IFD-test-apparatus.

9.3.6.2.1 Procedure 1 (ISO/IEC 7816-3:1997, 9, rule 7.1, ISO/IEC 7816-3:1997, Annex A, scenario 9)

a) Reset the protocol at the IFD-test-apparatus.

b) The IFD sends block I(0,0) to the IFD-test-apparatus.

c) The IFD-test-apparatus sends an invalid block to the IFD:

© ISO/IEC 2001 – All rights reserved

Copyright International Organization for Standardization
Provided by IHS under license with ISO
No reproduction or networking permitted without license from IHS
Not for Resale

Scenario 15 — Block sequencing by the IFD, Procedure 1 (ISO/IEC 7816-3:1997, 9, rule 7.1, ISO/IEC 7816-3:1997, Annex A, scenario 9)

IFD		IFD-test-apparatus
I(0,0)(INF = '00 B0 00 00 02')	⟶	
	⟵	I(0,0)(EDC = wrong)
IFD Response	⟶	

d) Record the response, if any, of the IFD.

9.3.6.2.2 Procedure 2 (ISO/IEC 7816-3:1997, 9, rule 7.4.2)

a) Reset the protocol at the IFD-test-apparatus.

b) The IFD sends block I(0,0) to the IFD-test-apparatus.

c) The IFD-test-apparatus sends an invalid block to the IFD.

d) The IFD-test-apparatus waits for the IFD to respond then sends a second invalid block to the IFD.

e) Record the response, if any, from the IFD.

f) If the IFD response is an R-block with PCB=81, the IFD-test-apparatus sends a third invalid block to the IFD, otherwise evaluate the response against the test criteria and end the test.

g) Record the response, if any, from the IFD.

--`,,```,,,,````-`-`,,`,,`,`,,`---
© ISO/IEC 2001 – All rights reserved
Copyright International Organization for Standardization
Provided by IHS under license with ISO
No reproduction or networking permitted without license from IHS
Not for Resale

Scenario 16 — Block sequencing by the IFD, Procedure 2 (ISO/IEC 7816-3:1997, 9, rule 7.4.2)

IFD		IFD-test-apparatus
I(0,0)(INF = '00 B0 00 00 02')	⟶	
	⟵	I(0,0)(EDC = Wrong)
R(0)(PCB='81')	⟶	
	⟵	I(0,0)(EDC = Wrong)
R(0)(PCB='81')	⟶	
	⟵	I(0,0)(EDC = Wrong) [a]
IFD Response	⟶	

[a] The IFD may resynchronize or reset the ICC after less than three attempts.

9.3.6.2.3 Procedure 3 (with chaining) (ISO/IEC 7816-3:1997, 9, rules 7.1 and 5)

a) Reset the protocol at the IFD-test-apparatus.

b) The IFD sends block I(0,0) to the IFD-test-apparatus, with the INF field containing a command supported by the IFD-test-apparatus.

c) The IFD-test-apparatus sends the first block of the chain in block I(0,1) and waits for the IFD response.

d) The IFD-test-apparatus sends an invalid block to the IFD.

e) Record the response, if any, from the IFD.

f) Evaluate the response to rule 7.1; if it is does not meet the criteria end the test, otherwise the IFD-test-apparatus sends the second block of the chain without error.

g) Record the response, if any, from the IFD.

© ISO/IEC 2001 – All rights reserved

Copyright International Organization for Standardization
Provided by IHS under license with ISO
No reproduction or networking permitted without license from IHS
Not for Resale

Scenario 17 — Block sequencing by the IFD, Procedure 3 (with chaining) (ISO/IEC 7816-3:1997, 9, rules 7.1 and 5)

IFD		IFD-test-apparatus
I(0,0)(INF = ’00 B0 00 00 24’)	⟶	
	⟵	I(0,1)(INF = ’31 32 .. 50’)
R(1)(PCB=‘90’)	⟶	
	⟵	I(1,0)(EDC = Wrong)
R(1)(PCB=‘91’)	⟶	
	⟵	I(1,0)(INF = ’51 52 53 54 90 00’)
I(1,0)(INF = ’00 B0 00 00 24’)	⟶	

9.3.6.2.4 Procedure 4 (ISO/IEC 7816-3:1997, 9, rule 7.4.2, scenario 34)

a) Maintain the IFD-test-apparatus mute after a valid ATR sequence.

b) The IFD sends an I-block to the IFD-test-apparatus.

c) Record all responses from the IFD during at least three consecutive BWT periods.

Scenario 18 — Block sequencing by the IFD, Procedure 4 (ISO/IEC 7816-3:1997, 9, rule 7.4.2, scenario 34)

IFD		IFD-test-apparatus
I(0,0)(INF = ‘00 B0 00 00 02’)	⟶	
	⟵	MUTE
R(0)(PCB=’81’) or R(0)(PCB=’82’) or Reset	⟶	
	⟵	MUTE
R(0)(PCB=’81’) or R(0)(PCB=’82’) or Reset	⟶	
	⟵	MUTE
IFD response	⟶	

Copyright International Organization for Standardization
Provided by IHS under license with ISO
No reproduction or networking permitted without license from IHS
Not for Resale
© ISO/IEC 2001 – All rights reserved

9.3.6.2.5 Test report

Report the responses, if any, of the IFD to each procedure.

9.3.7 Recovery of a transmission error by the IFD

The purpose of this test is to check that the IFD reacts to a negative acknowledgement according to the standard (see ISO/IEC 7816-3:1997).

9.3.7.1 Apparatus

See clause 4.6.3

9.3.7.2 Procedure

a) Request an I-block from the IFD.

b) Send a negative acknowledgement R-block.

c) Record the reaction of the IFD.

Scenario 19 — Recovery of a transmission error by the IFD

IFD		IFD-test-apparatus
I(0,0)(INF = '00 B0 00 00 02')	——→	
	←——	R(0)(PCB='81')
IFD Response	——→	

9.3.7.3 Test report

Report the reaction of the IFD.

9.3.8 IFSC negotiation

The purpose of this test is to check the IFSC negotiation (see ISO/IEC 7816-3:1997).

9.3.8.1 Apparatus

See clause 4.6.3

9.3.8.2 Procedure

Connect the IFD to the IFD-test-apparatus.

a) Reset the IFD-test-apparatus.

© ISO/IEC 2001 – All rights reserved

Copyright International Organization for Standardization
Provided by IHS under license with ISO
No reproduction or networking permitted without license from IHS
Not for Resale

b) Exchange one I-block in each direction with a command supported by the IFD-test-apparatus, with the INF field containing a command supported by the IFD.

c) Send block S(IFS request) to the IFD.

d) Record the reaction of the IFD.

9.3.8.3 Test report

Report the reaction of the IFD.

9.3.9 Abortion by the ICC

The purpose of this test is to check the chaining abortion (see ISO/IEC 7816-3:1997).

9.3.9.1 Apparatus

See clause 4.6.3

9.3.9.2 Procedure

Connect the IFD to the IFD-test-apparatus.

a) Reset the IFD-test-apparatus.

b) IFD sends I-block to the IFD-test-apparatus, with the INF field containing a command supported by the emulator (Read Binary of 36 bytes without offset, see ISO/IEC 7816-4:1995).

c) IFD-test-apparatus sends the first block of the chain in block I(0,1), to which the IFD shall respond with R(1).

d) Send an ABORT request to the IFD.

Scenario 20 — Abortion by the ICC

IFD		IFD-test-apparatus
I(0,0)(INF = ’00 B0 00 00 24’)	⟶	
	⟵	I(0,1)(INF = ‘31 32 .. 50’)
R(1)(PCB=‘90’)	⟶	
	⟵	S(ABORT request)
IFD response	⟶	

e) Record the presence and the content of the response of the IFD.

Copyright International Organization for Standardization
Provided by IHS under license with ISO
No reproduction or networking permitted without license from IHS
Not for Resale
© ISO/IEC 2001 – All rights reserved

9.3.9.3 Test report

Report the presence and the content of the response of the IFD.

© ISO/IEC 2001 – All rights reserved
Copyright International Organization for Standardization
Provided by IHS under license with ISO
No reproduction or networking permitted without license from IHS
Not for Resale

Annex A
(informative)

Additional Test Methods

A.1 ICC — Mechanical strength: 3 wheel test

The purpose of this test is to determine the mechanical reliability of an ICC by moving the ICC cyclically between three steel wheels rolling over the contact area.

NOTE This test may not found to be relevant for IC with a die area of less than 4 mm^2.

A.1.1 Apparatus

The principle of the apparatus is shown in Figure A.1. It comprises three wheels, one above and two below the ICC. The ICC is moved cyclically between the three wheels, so that the contact area is repeatedly exposed to the forces exerted by the wheels.

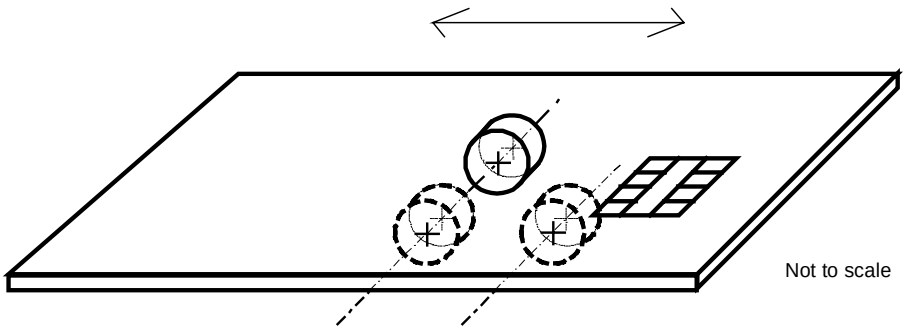

Figure A.1 — 3 wheel test principle

The apparatus shall comprise three wheels mounted as shown in Figure A.2. Wheels W2 and W3 are fixed. Wheel W1 can move in the direction rectangular to the surface of the ICC with a maximum error of ± 5 ° and applies a force F defined in Figure A.2 to the surface of the ICC. The resulting downward movement of wheel W1 shall be limited, so that the distance between axis B in Figure A.2 and the surface of wheel W1 never becomes smaller than 3 mm.

© ISO/IEC 2001 – All rights reserved
Copyright International Organization for Standardization
Provided by IHS under license with ISO
No reproduction or networking permitted without license from IHS
Not for Resale

Dimensions in mm
Default Tolerance ± 0,1 mm

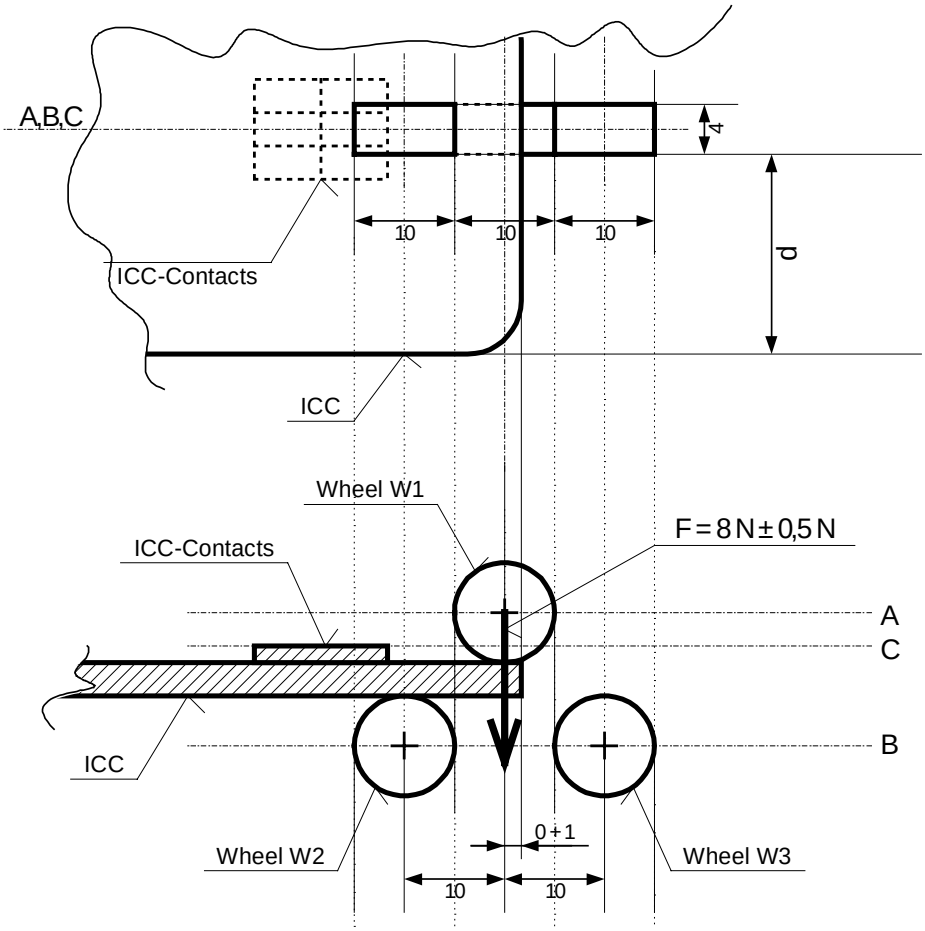

Figure A.2 — location of the wheels and initial position of the ICC

The wheels shall have a standard chamfer and run on low-friction bearings, e.g. ball bearings.

NOTE 1 The following ball bearing definitions define suitable wheels: ISO 623ZZ, e.g. "radiospares" ref=747-721 or NMB=DDR 1030 ZZ RAS or AISI440C.

NOTE 2 The part of the ICC moving over W2 should be free to bend.

Measure d shall be such that the distance between the centerline axis of the present contacts (Axis C in Figure A.2 and Figure A.3) and the plane defined by the centerline axes of the wheel W1 (Axis A in Figure A.2 and Figure A.3), and the wheels W2 and W3 (Axis B in Figure A.2 and Figure A.3) does not exceed 0,5 mm, measured above and below any of the three wheels.

NOTE 3 'above and below' shall be seen rectangular to the ICC surface.

NOTE 4 Based on an ICC having minimum contacts as defined in ISO/IEC 7816-2:1999, Measure d would be:
Contact side facing upwards: 20,62 mm for an ICC with 6 contacts and 21,89 mm for an ICC with 8 contacts.
Contact side facing downwards: 29,36 mm for an ICC with 6 contacts and 28,09 mm for an ICC with 8 contacts.

© ISO/IEC 2001 – All rights reserved

Copyright International Organization for Standardization
Provided by IHS under license with ISO
No reproduction or networking permitted without license from IHS
Not for Resale

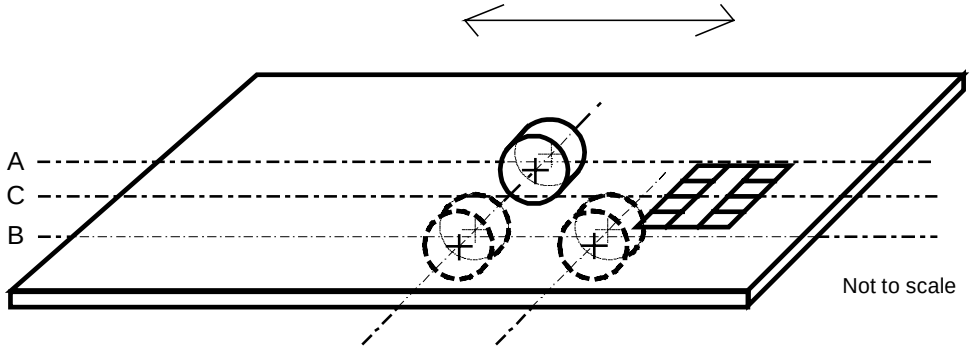

Figure A.3 — Location of Axes A, B and C

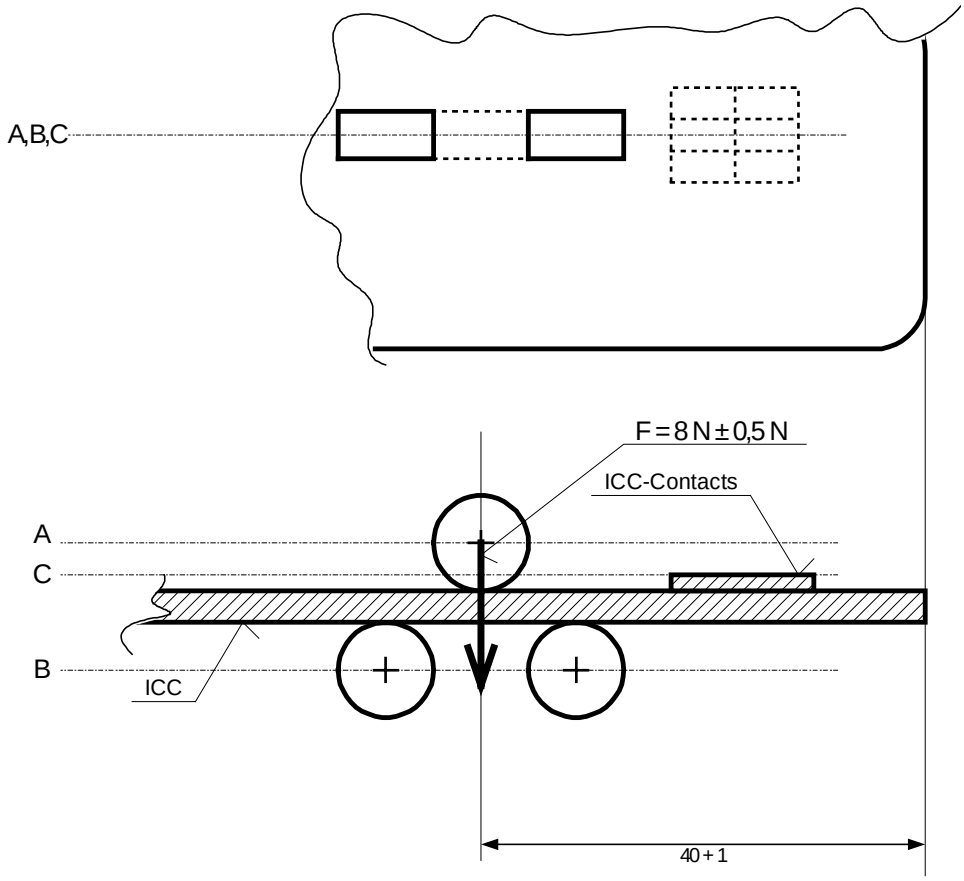

Figure A.4 — Inserted Position of the ICC

A.1.2 Method

During all movements inside the apparatus as described below, the speed of the ICC shall not exceed 100 mm/s.

During all movements the angle between axis C and the plane defined by axis A and axis B shall not exceed 2°.

© ISO/IEC 2001 – All rights reserved
Copyright International Organization for Standardization
Provided by IHS under license with ISO
No reproduction or networking permitted without license from IHS
Not for Resale

a) Pre condition sample.

b) Verify that the ICC shows an Answer to Reset response conforming to the base standard.

c) Insert the ICC into the apparatus in the initial position with the contacts facing upwards as defined in Figure A.2.

d) Move the ICC within the apparatus into the inserted position as defined in Figure A.4.

e) Withdraw the ICC to the initial position.

NOTE Steps c) to e) are defined as one cycle.

f) Repeat c) to e) for a total number of 50 cycles with a frequency of 0,5 Hz.

g) Insert the ICC into the apparatus in the initial position, but with the contacts facing downwards.

h) Move the ICC within the apparatus into the inserted position.

i) Withdraw the ICC to the initial position.

j) Repeat g) to i) for a total number of 50 cycles with a frequency of 0,5 Hz.

k) Check if the ICC shows an Answer to Reset response conforming to the base standard and note the result.

A.1.3 Test Report

The report shall state if the ICC shows an Answer to Reset response, which conforms to the base standard.

NOTE Acceptance Criteria are to be defined by the parties involved.

A.2 IFD — Reaction of the IFD to invalid PCBs

The purpose of this test is to analyze the reaction of the IFD to invalid PCBs (see ISO/IEC 7816-3).

A.2.1 Apparatus

See clause 4.6.3

A.2.2 Procedure

a) Reset the IFD-test-apparatus.

b) The IFD sends block I(0,0) to the IFD-test-apparatus, with the INF field containing a command supported by the IFD-test-apparatus (Read Binary of 2 bytes without offset (see ISO/IEC 7816-4:1995)).

c) Send an erroneous block to the IFD with an invalid PCB (unknown coding). The parity and the EDC of this block shall be correct.

© ISO/IEC 2001 – All rights reserved

Copyright International Organization for Standardization
Provided by IHS under license with ISO
No reproduction or networking permitted without license from IHS
Not for Resale

Scenario 21 — IFD — Reaction of the IFD to invalid PCBs

IFD		IFD-test-apparatus
I(0,0)(INF='00 B0 00 00 02')	⟶	
	⟵	Block with PCB='FF'
IFD response	⟶	

d) Record the presence and the content of the response from the IFD.

A.2.3 Test report

Report the presence and the content of the response from the IFD.

Copyright International Organization for Standardization
Provided by IHS under license with ISO
No reproduction or networking permitted without license from IHS
Not for Resale
© ISO/IEC 2001 – All rights reserved

ICS 35.240.15

Price based on 80 pages

© ISO/IEC 2001 – All rights reserved

Copyright International Organization for Standardization
Provided by IHS under license with ISO
No reproduction or networking permitted without license from IHS

Not for Resale