IEEE STANDARDS ASSOCIATION

IEEE Guide for Direct Lightning Stroke Shielding of Substations

IEEE Power and Energy Society

Sponsored by the
Substations Committee

IEEE
3 Park Avenue
New York, NY 10016-5997
USA

30 April 2013

IEEE Std 998™-2012
(Revision of
IEEE Std 998-1996)

--`,,,,,,,`,```,,`,`,,`,-`-``,```,,,`---

Copyright The Institute of Electrical and Electronics Engineers, Inc.
Provided by IHS under license with IEEE
No reproduction or networking permitted without license from IHS

Order Number: 02120914
Sold to:EGAT [700166108393] - VARRIS.Y@EGAT.CO.TH,
Not for Resale,2016-09-15 03:57:48 UTC

--`,,,,,,`-`-`,,`,,`,`,,`-`-`,,`,,`,`---

Copyright The Institute of Electrical and Electronics Engineers, Inc.
Provided by IHS under license with IEEE
No reproduction or networking permitted without license from IHS

Order Number: 02120914
Sold to:EGAT [700166108393] - VARRIS.Y@EGAT.CO.TH,
Not for Resale,2016-09-15 03:57:48 UTC

IEEE Std 998™-2012
(Revision of
IEEE Std 998-1996)

IEEE Guide for Direct Lightning Stroke Shielding of Substations

Sponsor

Substations Committee
of the
IEEE Power and Energy Society

Approved 5 December 2012

IEEE-SA Standards Board

--`,,,,,,`,```,,``,`,,`,-`-``,```,,,`---

Copyright The Institute of Electrical and Electronics Engineers, Inc.
Provided by IHS under license with IEEE
No reproduction or networking permitted without license from IHS

Order Number: 02120914
Sold to:EGAT [700166108393] - VARRIS.Y@EGAT.CO.TH,
Not for Resale,2016-09-15 03:57:48 UTC

Grateful acknowledgements

Figure 1 and Annex G, Copyright © 2008 IEEE. Reprinted with permission from Orrell, J. T., "Direct Stroke Lightning Protection," paper presented at EEI Electrical System and Equipment Committee Meeting, Washington, D.C., 25 Oct. 1988.

Figure 2 adapted from *Electrical Transmission and Distribution Reference Book,* by Central Station Engineers of the Westinghouse Electric Corporation, 4th ed., East Pittsburgh, PA, 1964.

Figures 6, 8, and 9 from MacGorman, D. R., M. W. Maier, and W. D. Rust, "Lightning Strike Density for the Contiguous United States from Thunderstorm Duration Record," report no. NUREG/CR-3759, National Oceanic and Atmospheric Administration, Norman, OK, May 1984.

Figure 7 from Meteorological Division, Department of Transportation, Canada. Copyright © Environment Canada, used with permission.

The IEEE thanks the Vaisala, Inc. for permission to reproduce the Vaisala image: Graph of USA ground 3 flash density as shown in Figure 10.

Figure 22 Copyright © 1972 IEEE. Reprinted with permission from Sargent, M. A., "The Frequency Distribution of Current Magnitudes of Lightning Strokes to Tall Structures," *IEEE Transactions on Power Apparatus and Systems,* vol. 91, no. 5, pp. 2224–2229, 1972.

Figures 30 and 31 Copyright © 1998 IEEE. Reprinted with permission from Mousa, A. M., "The Applicability of Lightning Elimination Devices to Substations and Power Lines," *IEEE Transactions on Power Delivery,* vol. 13, pp. 1120–1127, 1998.

Figure 32 Copyright © 1987 IEEE. Reprinted with permission from Eriksson, A. J., "An Improved Electrogeometric Model for Transmission Line Shielding Analysis," *IEEE Transactions on Power Delivery,* vol. 2, no. 3, pp. 871–886, July 1987.

Figures 44 and 45 Copyright © 1990 IEEE. Reprinted with permission from Dellera, L. Garbagnati E., "Lightning Stroke Simulation by Means of the Leader Progression Model. Part I. Description of the Model and Evaluation of Exposure of Free-Standing Structures," IEEE Transactions on Power Delivery, vol. 5, pp. 2009–22, 1990.

Figure 46 from CIGRE Task Force 33.01.03, "Lightning Exposure of Structures and Interception Efficiency of Air Terminals," Paris: CIGRE, Technical Brochure 118, Oct. 1997.

Figure 51 from the *Journal of Physics D: Applied Physics,* vol. 39, 2006, Becerra, M. and Cooray, V., "A Self-Consistent Upward Leader Propagation Model," is reproduced by permission of IOP Publishing. All rights reserved.

Figure C.1 reprinted with permission from *Transmission Line Reference Book 345 kV and Above,* Second Edition, Revised. Copyright © 1982, Electric Power Research Institute, Palo Alto, CA.

Abstract: Design information for the methods historically and typically applied by substation designers to reduce direct lightning strokes to equipment and buswork within substations is provided. Two approaches, the classical empirical method and the electrogeometric model, are presented in detail. A third approach, which involves the use of non-conventional lightning terminals and related design methods, is also reviewed.

Keywords: collection volume method (CVM), direct stroke shielding, electro-geometric model (EGM), field intensification factor method (FIFM), fixed angle, IEEE 998™, leader inception theory (LIT), leader progression model (LPM), lightning stroke protection, self-consistent leader inception and propagation model (SLIM), substations empirical curves

The Institute of Electrical and Electronics Engineers, Inc.
3 Park Avenue, New York, NY 10016-5997, USA

Copyright © 2013 by The Institute of Electrical and Electronics Engineers, Inc.
All rights reserved. Published 30 April 2013. Printed in the United States of America.

IEEE is a registered trademark in the U.S. Patent & Trademark Office, owned by The Institute of Electrical and Electronics Engineers, Incorporated.

PDF: ISBN 978-0-7381-8037-3 STD98031
Print: ISBN 978-0-7381-8038-0 STDPD98031

IEEE prohibits discrimination, harassment, and bullying. For more information, visit http://www.ieee.org/web/aboutus/whatis/policies/p9-26.html.

Copyright The Institute of Electrical and Electronics Engineers, Inc.
Provided by IHS under license with IEEE
No reproduction or networking permitted without license from IHS

Order Number: 02120914
Sold to:EGAT [700166108393] - VARRIS.Y@EGAT.CO.TH,
Not for Resale,2016-09-15 03:57:48 UTC

Notice and Disclaimer of Liability Concerning the Use of IEEE Documents: IEEE Standards documents are developed within the IEEE Societies and the Standards Coordinating Committees of the IEEE Standards Association (IEEE-SA) Standards Board. IEEE develops its standards through a consensus development process, approved by the American National Standards Institute, which brings together volunteers representing varied viewpoints and interests to achieve the final product. Volunteers are not necessarily members of the Institute and serve without compensation. While IEEE administers the process and establishes rules to promote fairness in the consensus development process, IEEE does not independently evaluate, test, or verify the accuracy of any of the information or the soundness of any judgments contained in its standards.

Use of an IEEE Standard is wholly voluntary. IEEE disclaims liability for any personal injury, property or other damage, of any nature whatsoever, whether special, indirect, consequential, or compensatory, directly or indirectly resulting from the publication, use of, or reliance upon any IEEE Standard document.

IEEE does not warrant or represent the accuracy or content of the material contained in its standards, and expressly disclaims any express or implied warranty, including any implied warranty of merchantability or fitness for a specific purpose, or that the use of the material contained in its standards is free from patent infringement. IEEE Standards documents are supplied "**AS IS**."

The existence of an IEEE Standard does not imply that there are no other ways to produce, test, measure, purchase, market, or provide other goods and services related to the scope of the IEEE standard. Furthermore, the viewpoint expressed at the time a standard is approved and issued is subject to change brought about through developments in the state of the art and comments received from users of the standard. Every IEEE standard is subjected to review at least every ten years. When a document is more than ten years old and has not undergone a revision process, it is reasonable to conclude that its contents, although still of some value, do not wholly reflect the present state of the art. Users are cautioned to check to determine that they have the latest edition of any IEEE standard.

In publishing and making its standards available, IEEE is not suggesting or rendering professional or other services for, or on behalf of, any person or entity. Nor is IEEE undertaking to perform any duty owed by any other person or entity to another. Any person utilizing any IEEE Standards document, should rely upon his or her own independent judgment in the exercise of reasonable care in any given circumstances or, as appropriate, seek the advice of a competent professional in determining the appropriateness of a given IEEE standard.

Translations: The IEEE consensus development process involves the review of documents in English only. In the event that an IEEE standard is translated, only the English version published by IEEE should be considered the approved IEEE standard.

Official Statements: A statement, written or oral, that is not processed in accordance with the IEEE-SA Standards Board Operations Manual shall not be considered the official position of IEEE or any of its committees and shall not be considered to be, nor be relied upon as, a formal position of IEEE. At lectures, symposia, seminars, or educational courses, an individual presenting information on IEEE standards shall make it clear that his or her views should be considered the personal views of that individual rather than the formal position of IEEE.

Comments on Standards: Comments for revision of IEEE Standards documents are welcome from any interested party, regardless of membership affiliation with IEEE. However, IEEE does not provide consulting information or advice pertaining to IEEE Standards documents. Suggestions for changes in documents should be in the form of a proposed change of text, together with appropriate supporting comments. Since IEEE standards represent a consensus of concerned interests, it is important to ensure that any responses to comments and questions also receive the concurrence of a balance of interests. For this reason, IEEE and the members of its societies and Standards Coordinating Committees are not able to provide an instant response to comments or questions except in those cases where the matter has previously been addressed. Any person who would like to participate in evaluating comments or revisions to an IEEE standard is welcome to join the relevant IEEE working group at http://standards.ieee.org/develop/wg/.

Comments on standards should be submitted to the following address:

Secretary, IEEE-SA Standards Board
445 Hoes Lane
Piscataway, NJ 08854
USA

Photocopies: Authorization to photocopy portions of any individual standard for internal or personal use is granted by The Institute of Electrical and Electronics Engineers, Inc., provided that the appropriate fee is paid to Copyright Clearance Center. To arrange for payment of licensing fee, please contact Copyright Clearance Center, Customer Service, 222 Rosewood Drive, Danvers, MA 01923 USA; +1 978 750 8400. Permission to photocopy portions of any individual standard for educational classroom use can also be obtained through the Copyright Clearance Center.

--`,,,,,,`,```,,``,`,,`,-`-`,,`,,`,`,,`---

Copyright The Institute of Electrical and Electronics Engineers, Inc.
Provided by IHS under license with IEEE
No reproduction or networking permitted without license from IHS

Order Number: 02120914
Sold to:EGAT [700166108393] - VARRIS.Y@EGAT.CO.TH,
Not for Resale,2016-09-15 03:57:48 UTC

Notice to users

Laws and regulations

Users of IEEE Standards documents should consult all applicable laws and regulations. Compliance with the provisions of any IEEE Standards document does not imply compliance to any applicable regulatory requirements. Implementers of the standard are responsible for observing or referring to the applicable regulatory requirements. IEEE does not, by the publication of its standards, intend to urge action that is not in compliance with applicable laws, and these documents may not be construed as doing so.

Copyrights

This document is copyrighted by the IEEE. It is made available for a wide variety of both public and private uses. These include both use, by reference, in laws and regulations, and use in private self-regulation, standardization, and the promotion of engineering practices and methods. By making this document available for use and adoption by public authorities and private users, the IEEE does not waive any rights in copyright to this document.

Updating of IEEE documents

Users of IEEE Standards documents should be aware that these documents may be superseded at any time by the issuance of new editions or may be amended from time to time through the issuance of amendments, corrigenda, or errata. An official IEEE document at any point in time consists of the current edition of the document together with any amendments, corrigenda, or errata then in effect. In order to determine whether a given document is the current edition and whether it has been amended through the issuance of amendments, corrigenda, or errata, visit the IEEE-SA Website at http://standards.ieee.org/index.html or contact the IEEE at the address listed previously. For more information about the IEEE Standards Association or the IEEE standards development process, visit IEEE-SA Website at http://standards.ieee.org/index.html.

Errata

Errata, if any, for this and all other standards can be accessed at the following URL: http://standards.ieee.org/findstds/errata/index.html. Users are encouraged to check this URL for errata periodically.

Patents

Attention is called to the possibility that implementation of this standard may require use of subject matter covered by patent rights. By publication of this standard, no position is taken by the IEEE with respect to the existence or validity of any patent rights in connection therewith. If a patent holder or patent applicant has filed a statement of assurance via an Accepted Letter of Assurance, then the statement is listed on the IEEE-SA Website at http://standards.ieee.org/about/sasb/patcom/patents.html. Letters of Assurance may indicate whether the Submitter is willing or unwilling to grant licenses under patent rights without compensation or under reasonable rates, with reasonable terms and conditions that are demonstrably free of any unfair discrimination to applicants desiring to obtain such licenses.

Copyright The Institute of Electrical and Electronics Engineers, Inc.
Provided by IHS under license with IEEE
No reproduction or networking permitted without license from IHS

Order Number: 02120914
Sold to:EGAT [700166108393] - VARRIS.Y@EGAT.CO.TH,
Not for Resale,2016-09-15 03:57:48 UTC

Essential Patent Claims may exist for which a Letter of Assurance has not been received. The IEEE is not responsible for identifying Essential Patent Claims for which a license may be required, for conducting inquiries into the legal validity or scope of Patents Claims, or determining whether any licensing terms or conditions provided in connection with submission of a Letter of Assurance, if any, or in any licensing agreements are reasonable or non-discriminatory. Users of this standard are expressly advised that determination of the validity of any patent rights, and the risk of infringement of such rights, is entirely their own responsibility. Further information may be obtained from the IEEE Standards Association.

Copyright The Institute of Electrical and Electronics Engineers, Inc.
Provided by IHS under license with IEEE
No reproduction or networking permitted without license from IHS

Order Number: 02120914
Sold to:EGAT [700166108393] - VARRIS.Y@EGAT.CO.TH,
Not for Resale,2016-09-15 03:57:48 UTC

Participants

At the time this IEEE guide was completed, the D5 Working Group had the following membership:

Robert S. Nowell, *Chair*
Sakis Meliopoulos, *Vice Chair*

Radoslav Barac
Thomas Barnes
Hassein Bashirian
Bryan Beske
James Cain
Bill Carman
Kum S. Chan
Koushik Chanda
Randy Clelland
Franco D'Alessandro
Dennis DeCosta
W. Bruce Dietzman
David Lane Garrett
Keith Graham
Joseph Gravelle
Steve Greenfield
Charles Haahr
Thomas Harger
Martin Havelka
Richard Keil
Dave Kelley
Cris Kramschuster
Reginaldo Maniego
Mark Morgan
James T. Orrell
Biren Patel
Thomas Proios
Donald Rogers
Hamid Sharifnia
Boris Shvartsberg
David Stamm
Ryan Stargel
Brian Stephens
Curtis Stidham
Brian Story
Keith Wallace
Don Wengerter
Alexander Wong
Yaowu Zhang

The following members of the individual balloting committee voted on this guide. Balloters may have voted for approval, disapproval, or abstention.

William Ackerman
Michael Adams
Stan Arnot
Thomas Barnes
George Becker
Bryan Beske
Steven Bezner
Wallace Binder
Thomas Blackburn
William Bloethe
Dale Boling
Paul Boman
Dieter Braun
Gustavo Brunello
Mark Bushnell
James Cain
Thomas Callsen
Giuseppe Carbone
Michael Champagne
Kum S. Chan
Suresh Channarasappa
William Chisholm
Robert Christman
Randy Clelland
Richard Cohen
Michael Comber
John Crouse
Chuanyou Dai
Franco D'Alessandro
Dennis DeCosta
W. Bruce Dietzman
Carlo Donati
Gary Donner
Michael Dood
Douglas Dorr
Randall Dotson
Ernest Duckworth
Donald Dunn
Gary R. Engmann
C. Erven
James Fairris
Louis Farquhar
Jorge Fernandez Daher
Michael Foley
David Lane Garrett
James Ghrist
David Giegel
David Gilmer
Waymon Goch
Jalal Gohari
Edwin Goodwin
James Graham
Keith Graham
Joseph Gravelle
Steve Greenfield
Randall Groves
Charles Haahr
Paul Hamer
David Harris
Martin Havelka
Steven Hensley
Lee Herron
Gary Heuston
Raymond Hill
Werner Hoelzl
Robert Hoerauf
Philip Hopkinson
Ronald Hotchkiss
Stephen Humeniuk
Andrew Jones
Lars Juhlin
Laszlo Kadar
Donald Kane
Richard Keil
Dave Kelley
Gael Kennedy
Yuri Khersonsky
Chad Kiger
James Kinney
Robert Kluge
Hermann Koch
Joseph L. Koepfinger
Jim Kulchisky
Saumen Kundu
Donald Laird
Chung-Yiu Lam
Benjamin Lanz
Thomas La Rose
Paul Lindemulder
Debra Longtin
Federico Lopez
Greg Luri
Michael Maytum
Omar Mazzoni
William McBride
John McDaniel
Gary Michel
Daleep Mohla
Mark Morgan

Copyright © 2013 IEEE. All rights reserved.

Copyright The Institute of Electrical and Electronics Engineers, Inc.
Provided by IHS under license with IEEE
No reproduction or networking permitted without license from IHS

Order Number: 02120914
Sold to:EGAT [700166108393] - VARRIS.Y@EGAT.CO.TH,
Not for Resale,2016-09-15 03:57:48 UTC

Abdul Mousa
Jerry Murphy
Arun Narang
Arthur Neubauer
Michael S. Newman
Joe Nims
Gary Nissen
Robert S. Nowell
Hans-Wolf Oertel
Carl Orde
James T. Orrell
Lorraine Padden
Bansi Patel
Biren Patel
Shashi Patel
David Peelo
Emanuel Petrache
Christopher Petrola
Thomas Phipps
Donald Platts
Percy Pool
Alvaro Portillo
Douglas Proctor
Farhad Rachidi
Reynaldo Ramos
John Randolph
Marc Ressler
William Rison
Farouk A. M. Rizk
Michael Roberts
Charles Rogers
Marnie Roussell
Thomas Rozek
Bartien Sayogo
Dennis Schlender
Robert Schlesinger
Hamid Sharifnia
Devki Sharma
Soorya Shrestha
Gil Shultz
Hyeong Sim
Douglas Smith
James Smith
Jerry Smith
Rusty Soderberg
John Spare
David Stamm
Ryan Stargel
Brian Stephens
Gary Stoedter
Brian Story
K. B. Stump
Paul Sullivan
Antony Surtees
Leroy Taylor
David Tepen
William Thompson
John Toth
Harold VanSickle III
Luis Vargas
Raul Velazquez
John Vergis
Keith Wallace
David Wallach
Daniel Ward
Joe Watson
Yingli Wen
Donald Wengerter
Kenneth White
James Wilson
Alexander Wong
Larry Young
Roland Youngberg
Jian Yu
Luis Zambrano

When the IEEE-SA Standards Board approved this guide on 5 December 2012, it had the following membership:

Richard H. Hulett, *Chair*
John Kulick, *Vice Chair*
Robert M. Grow, *Past Chair*
Konstantinos Karachalios, *Secretary*

Satish Aggarwal
Masayuki Ariyoshi
Peter Balma
William Bartley
Ted Burse
Clint Chaplin
Wael William Diab
Jean-Philippe Faure
Alexander Gelman
Paul Houzé
Jim Hughes
Joseph L. Koepfinger*
David J. Law
Thomas Lee
Hung Ling
Oleg Logvinov
Ted Olsen
Gary Robinson
Jon Walter Rosdahl
Sam Sciacca
Mike Seavey
Yatin Trivedi
Phil Winston
Don Wright

*Member Emeritus

Also included are the following nonvoting IEEE-SA Standards Board liaisons:

Richard DeBlasio, *DOE Representative*
Michael Janezic, *NIST Representative*

Don Messina
IEEE Standards Program Manager, Document Development

Erin Spiewak
IEEE Standards Program Manager, Technical Program Development

Copyright © 2013 IEEE. All rights reserved.

Copyright The Institute of Electrical and Electronics Engineers, Inc.
Provided by IHS under license with IEEE
No reproduction or networking permitted without license from IHS

Order Number: 02120914
Sold to:EGAT [700166108393] - VARRIS.Y@EGAT.CO.TH,
Not for Resale,2016-09-15 03:57:48 UTC

Introduction

This introduction is not part of IEEE Std 998™-2012, IEEE Guide for Direct Lightning Stroke Shielding of Substations.

Work on the original guide began in 1973 and many former members made contributions toward its completion.

Working Group D5 of the IEEE PES Substations Committee began updating the guide in 2008. This guide provides information about various shielding methodologies to estimate and design direct lightning stroke shielding for outdoor substations. Calculation details, design estimates, and generally accepted practices for substation shielding designs are provided. This guide can be beneficial for engineers in evaluating direct lightning stroke shielding design for outdoor substations.

Dedication

This revision of IEEE Std 998 is dedicated to the memory of Gary R. Engmann. Gary through his membership in this working group and many others was always in the forefront with his statement "that the purpose of a guide is to disseminate information to practicing engineers." Gary had a long association and leadership with the IEEE Substations Committee, NESC, IEEE-SA, and many other Technical Committees and Working Groups. He did not back away from tasks whether controversial or not. His leadership of the IEEE 998 "Bucket Brigade" was an insightful contribution to the development of this revision. His knowledge, humor, and keen insight into the day-to-day needs of all of us will be sorely missed.

Copyright © 2013 IEEE. All rights reserved.

Copyright The Institute of Electrical and Electronics Engineers, Inc.
Provided by IHS under license with IEEE
No reproduction or networking permitted without license from IHS

Order Number: 02120914
Sold to:EGAT [700166108393] - VARRIS.Y@EGAT.CO.TH,
Not for Resale,2016-09-15 03:57:48 UTC

Contents

1. Overview 1
   1.1 Scope 1
   1.2 Purpose 2

2. Definitions 2

3. Lightning phenomena 4
   3.1 Charge formation in clouds 4
   3.2 Stroke formation 5
   3.3 Striking distance 7
   3.4 First negative return stroke current magnitude 9
   3.5 Keraunic level 11
   3.6 Ground flash density 13
   3.7 Lightning detection networks 15

4. The design problem 15

5. Empirical design methods 16
   5.1 Fixed angles 16
   5.2 Origin of empirical curves 18
   5.3 Application of empirical curves 19
   5.4 Areas protected by lightning masts 24
   5.5 Effect of hillsides 26

6. The electrogeometric model (EGM) 26
   6.1 History 26
   6.2 Mousa's EGM 28
   6.3 Application of the EGM by the rolling sphere method 31
   6.4 Application of Mousa's EGM 38
   6.5 Eriksson's EGM 39
   6.6 Calculation of failure probability 48

7. Alternative models of lightning interception 48
   7.1 Leader propagation models and methods for substation shielding 48
   7.2 Importance of air terminal geometry 67
   7.3 Active lightning terminals 67

Annex A (informative) Empirical shielding curves 69

Annex B (informative) Sample calculations 73
   B.1 Introduction 73
   B.2 Fixed-angle method 76
   B.3 Empirical method 83
   B.4 Electrogeometric model—rolling sphere method 93
   B.5 The Eriksson EGM examples 118
   B.6 Comparison of results of sample calculations and new methods and models 165

Annex C (informative) Calculation of corona radius and surge impedance under corona 167
   C.1 Corona radius 167
   C.2 Equivalent radius for bundle conductor 168
   C.3 Surge impedance under corona 169

Copyright © 2013 IEEE. All rights reserved.

Copyright The Institute of Electrical and Electronics Engineers, Inc.
Provided by IHS under license with IEEE
No reproduction or networking permitted without license from IHS

Order Number: 02120914
Sold to:EGAT [700166108393] - VARRIS.Y@EGAT.CO.TH,
Not for Resale,2016-09-15 03:57:48 UTC

Annex D (informative) Risk evaluation 170
D.1 Introduction 170
D.2 Sample calculation 170

Annex E (informative) IEEE Questionnaire—2007 173

Annex F (informative) The Dainwood method 175

Annex G (informative) Direct stroke lightning protection 176

Annex H (informative) Methodology review 194
H.1 Introduction 194
H.2 Qualitative description of the models 194
H.3 Engineering analysis methods 195
H.4 Assumptions 196
H.5 Description of the methods 196

Annex I (informative) Comparison of IEEE Std 998 to other standards 201
I.1 Comparison of IEEE Std 1243-1997 and IEEE Std 998 201
I.2 Comparison of IEEE Std 1410-2004 and IEEE 998 202
I.3 Comparison of IEC 62305 and IEEE Std 998 204

Annex J (informative) Bibliography 208

Copyright © 2013 IEEE. All rights reserved.

Copyright The Institute of Electrical and Electronics Engineers, Inc.
Provided by IHS under license with IEEE
No reproduction or networking permitted without license from IHS

Order Number: 02120914
Sold to:EGAT [700166108393] - VARRIS.Y@EGAT.CO.TH,
Not for Resale,2016-09-15 03:57:48 UTC

IEEE Guide for Direct Lightning Stroke Shielding of Substations

IMPORTANT NOTICE: IEEE Standards documents are not intended to ensure safety, health, or environmental protection, or ensure against interference with or from other devices or networks. Implementers of IEEE Standards documents are responsible for determining and complying with all appropriate safety, security, environmental, health, and interference protection practices and all applicable laws and regulations.

This IEEE document is made available for use subject to important notices and legal disclaimers. These notices and disclaimers appear in all publications containing this document and may be found under the heading "Important Notice" or "Important Notices and Disclaimers Concerning IEEE Documents." They can also be obtained on request from IEEE or viewed at http://standards.ieee.org/IPR/disclaimers.html.

1. Overview

1.1 Scope

This guide identifies and discusses design procedures to provide direct stroke shielding of outdoor distribution, transmission, and generating plant substations. Known methods of shielding from direct strokes were investigated during the preparation of this guide, and information is provided on two methods found to be widely used:

a) The classical empirical method

b) The electrogeometric model

A third approach, which involves the use of non-conventional lightning terminals and related design methods, is also reviewed.

This guide does not purport to include all shielding methods that may have been developed. The guide also does not address protection from surges entering a substation over power or communication lines or the personnel safety issues.

Users of this guide should thoroughly acquaint themselves with all factors that relate to the design of a particular installation and use good engineering judgment in the application of the methods given here, particularly with respect to the importance and value of the equipment being protected.

Copyright © 2013 IEEE. All rights reserved.

Copyright The Institute of Electrical and Electronics Engineers, Inc.
Provided by IHS under license with IEEE
No reproduction or networking permitted without license from IHS

Order Number: 02120914
Sold to:EGAT [700166108393] - VARRIS.Y@EGAT.CO.TH,
Not for Resale,2016-09-15 03:57:48 UTC

1.2 Purpose

Direct strokes from lightning can damage substation equipment and bus work. To protect equipment, substation engineers can install direct stroke lightning shielding. This guide is intended to provide engineers with information pertaining to the interception of damaging direct lightning strokes to outdoor substations.

This guide includes methods that have been utilized for decades as well as some that have been developed more recently. The general nature of lightning is discussed, and the problems associated with providing shielding from direct strokes are described. Tables, formulas, and examples are provided to calculate whether substation equipment is effectively shielded from direct lightning strokes.

Because of the unpredictability of lightning and the costs associated with damage from direct lightning strokes, research into lightning phenomenon is ongoing. This guide includes descriptions of four non-conventional modeling methods for lightning interception, as well as a review of active lightning terminals. The four non-conventional methods are in various stages of development and are presented as a sample of the continuing research in direct lightning stroke shielding. These methods have potential to be used as design models for substation direct lightning stroke shielding in the future.

A bibliography for further study is included to provide the substation shielding engineer with additional lightning research.

2. Definitions

For the purposes of this document, the following terms and definitions apply. The *IEEE Standards Dictionary Online* should be consulted for terms not defined in this clause.[1]

critical stroke amplitude: The amplitude of the current of the lightning stroke that, upon terminating on the phase conductor, would raise the voltage of the conductor to a level at which flashover is likely. The critical stroke amplitude can flow from the first stroke or any of the subsequent strokes in a lightning flash.

dart leader: The downward leader of a subsequent stroke of a multiple-stroke lightning flash.

effective shielding: That which permits lightning strokes no greater than those of critical amplitude (less design margin) to reach phase conductors. Effective (100% reliable) shielding cannot be achieved in substations because subsequent strokes can flow in the same channel established by the first stroke in a flash, and the models of first-stroke termination of flashes rely on statistical relationships among lightning parameters.

electrogeometric model (EGM): A geometrical representation of a facility, that, together with suitable analytical expressions correlating its dimensions to the current of the lightning stroke, is capable of predicting if the first return stroke of a lightning flash will terminate on the shielding system, the earth, or the element of the facility being protected.

electrogeometric model theory: The theory describing the electrogeometric model together with the related quantitative analyses including the correlation between the striking distance and the electrical parameters, such as charge and peak current, of the prospective first return stroke.

ground flash density (GFD): The average number of lightning flashes per unit area per unit time at a particular location.

isokeraunic lines: Lines on a map connecting points having the same keraunic level.

[1] *IEEE Standards Dictionary Online* subscription is available at: http://www.ieee.org/portal/innovate/products/standard/standards/standards_dictionary.html.

Copyright © 2013 IEEE. All rights reserved.

Copyright The Institute of Electrical and Electronics Engineers, Inc.
Provided by IHS under license with IEEE
No reproduction or networking permitted without license from IHS

Order Number: 02120914
Sold to:EGAT [700166108393] - VARRIS.Y@EGAT.CO.TH,
Not for Resale,2016-09-15 03:57:48 UTC

keraunic level: The average annual number of thunderstorm days or hours for a given locality. A daily keraunic level is called a thunderstorm-day and is the average number of days per year in which thunder is heard during a 24-hour period. An hourly keraunic level is called a thunderstorm-hour and is the average number of hours per year that thunder is heard during a 60-minute period.

lightning flash: The complete lightning discharge, most often composed of leaders from a cloud followed by one or more return strokes.

NOTE— For the purpose of this guide, the terms *lightning flash* and *lightning stroke* are used interchangeably because stroke multiplicity does not alter the design for direct stroke shielding of substations.[2]

lightning mast: A column or narrow-base structure containing a vertical conductor from its tip to earth, or that is itself a suitable conductor to earth. Its purpose is to intercept lightning strokes so that they do not terminate on objects located within its zone of protection.

negative shielding angle: The shielding angle formed when the shield wire is located beyond the area occupied by the outermost conductors. *See also:* **shielding angle**, **positive shielding angle**.

positive shielding angle: The shielding angle formed when the shield wire is located above and inside of the area occupied by the outermost conductors. *See also:* **shielding angle**; **negative shielding angle**.

rolling sphere method: A simplified technique for applying the electrogeometric theory to the shielding of substations. The technique involves rolling an imaginary sphere of prescribed radius over the surface of a substation. The sphere rolls up and over (and is supported by) lightning masts, shield wires, fences, and other grounded metal objects intended for lightning shielding. A piece of equipment is protected from a direct stroke if it remains below the curved surface of the sphere by virtue of the sphere being elevated by shield wires or other devices. Equipment that touches the sphere or penetrates its surface is not protected.

shielding angle: (A) (of shield wires with respect to conductors): The angle formed by the intersection of a vertical line drawn through a shield wire and a line drawn from the shield wire to a protected conductor. The angle is chosen to provide a zone of protection for the conductor so that most lightning strokes will terminate on the shield wire rather than on the conductor. **(B)** (of a lightning mast): The angle formed by the intersection of a vertical line drawn through the tip of the mast and another line drawn through the tip of the mast to earth at some selected angle with the vertical. Rotation of this angle around the structure forms a cone-shaped zone of protection for objects located within the cone. The angle is chosen so that lightning strokes will terminate on the mast rather than on an object contained within the protective zone so formed. *See also:* **positive shielding angle**; **negative shielding angle**.

shield wire (overhead power line or substation): A wire suspended above the phase conductors positioned with the intention of having lightning strike it instead of the phase conductor(s). *Syn:* **overhead ground wire (OHGW)**; **static wire**; **sky wire**.

stepped leader: Static discharge that propagates from a cloud into the air. Current magnitudes that are associated with stepped leaders are small (on the order of 100 A) in comparison with the final stroke current. The stepped leaders progress in a random direction in discrete steps from 10 to 80 m in length. It is not until the stepped leader is within striking distance of the point to be struck that the stepped leader is positively directed toward this point.

striking distance: The length of the final jump between the downward stepped leader and the grounded structure, as the electric field in this gap exceeds the electrical breakdown strength. The length of the final jump is a function of the leader potential, the associated charge, the rate of change of electric field, and the geometry of the gap. The first peak return stroke currents of negative downward lightning flashes are reasonably correlated with the respective impulse charge values.

[2] Notes in text, tables, and figures of a standard are given for information only and do not contain requirements needed to implement this standard.

Copyright © 2013 IEEE. All rights reserved.

Copyright The Institute of Electrical and Electronics Engineers, Inc.
Provided by IHS under license with IEEE
No reproduction or networking permitted without license from IHS

Order Number: 02120914
Sold to:EGAT [700166108393] - VARRIS.Y@EGAT.CO.TH,
Not for Resale,2016-09-15 03:57:48 UTC

surge impedance: The ratio between voltage and current of a wave that travels on a conductor.

thunder: The sound that follows a flash of lightning and is caused by the sudden expansion of the air in the path of electrical discharge.

thunderstorm day: A day on which thunder can be heard, and hence when lightning occurs.

thunderstorm hour: An hour during which thunder can be heard, and hence when lightning occurs.

3. Lightning phenomena

3.1 Charge formation in clouds

Numerous theories have been advanced regarding the formation of charge centers, charge separation within a cloud, and the ultimate development of lightning strokes. One theory attributes charge separation to the existence of both positive and negative ions in the air and the existence of a normal electric field directed toward the earth. Large drops of water in the electric field are polarized, the upper sides acquiring a negative charge and the lower sides a positive charge. As the polarized drops of water fall due to gravity, the undersides (positive sides) attract negative ions, while no such action occurs at the upper surfaces. As a result of this action, the drops accumulate negative charge. Thus, the original charges, which were distributed at random and produced an essentially neutral space charge, become separated. The large drops of water carry the negative charges to the lower portion of the cloud, causing the lower portion to be negatively charged and the upper portion to be positively charged. Another theory is that the interaction of ascending wind currents in the leading head of a cloud breaks up the water droplets causing the resulting droplets to be positively charged and the air to be negatively charged. The positively charged water droplets are unable to fall through the ascending wind currents at the head of the cloud, which causes this portion of the cloud to be positively charged while the remaining larger portion becomes negatively charged. Yet another theory suggests that there are regions of subzero temperature within a cloud and the subsequent formation of ice crystals is an essential factor in the explanation of the charge centers within clouds. (These three theories are presented by Wagner [B142][3].)

It has even been suggested that perhaps all of the physical phenomena postulated in the various theories can occur. At best, the processes occurring within a cloud formation that cause charge separation are complicated. The important fact to the designing engineer is that a charge separation does occur in thunderstorm clouds. Experiments by Wagner, McCann, and Beck, using balloons equipped with electric gradient measuring equipment have been performed to investigate typical charge distribution in thunderclouds, and these experiments have shown that, in general, the main body of a thundercloud is negatively charged and the upper part positively charged [B143]. A concentration of positive charge also frequently exists in the base of the cloud. Such charge distribution in a cloud causes an accumulation of charge of the opposite polarity on the earth's surface and on objects (e.g., trees, buildings, electric power lines, structures, etc.) beneath the cloud. A typical charged cloud and the resulting electric fields are shown in Figure 1 (Note that the plot in Figure 1 is of the electric gradient as the cloud moves over the ground, not the amount of charge below the cloud.) The electric fields shown in Figure 1 have been verified by data obtained by Fink and Beaty from ground gradient measuring equipment during the passage of storm clouds [B51].

[3] The numbers in brackets correspond to those of the bibliography in Annex J.

Copyright © 2013 IEEE. All rights reserved.

Copyright The Institute of Electrical and Electronics Engineers, Inc.
Provided by IHS under license with IEEE
No reproduction or networking permitted without license from IHS

Order Number: 02120914
Sold to:EGAT [700166108393] - VARRIS.Y@EGAT.CO.TH,
Not for Resale,2016-09-15 03:57:48 UTC

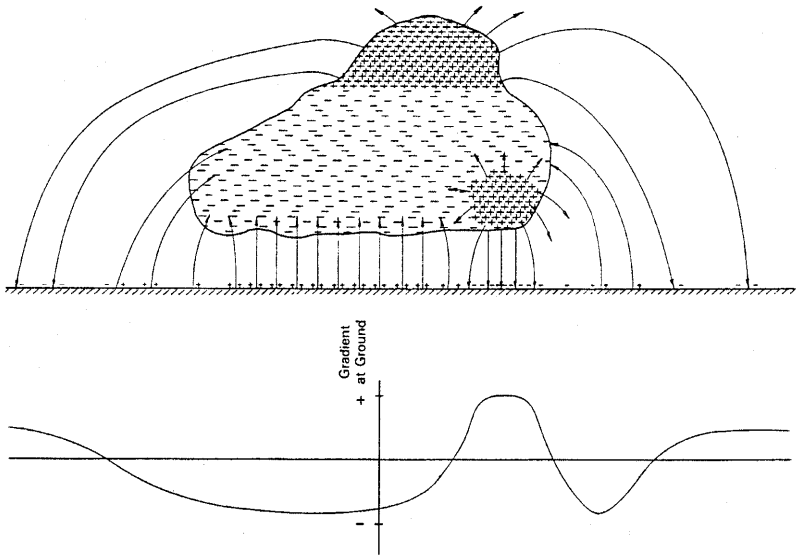

(From Orrell, J. T., "Direct Stroke Lightning Protection," paper presented at EEI Electrical System and Equipment Committee Meeting, Washington, D.C., 25 Oct. 1988 [reproduced in Annex G].)

Figure 1—Charged cloud and resulting electric fields

The electrical charge concentrations within a cloud are constrained to the size of the cloud. The cloud size, in relation to the earth, is small. Therefore, the electrical gradient that exists in the cloud is much greater than at the earth. Because of this, an electrical discharge tends to be initiated at the cloud rather than at the ground.

3.2 Stroke formation

3.2.1 Types of strokes

There are a number of different types of lightning strokes. These include strokes within clouds, strokes between separate clouds, strokes to tall structures, and strokes that terminate on the ground. The positive and negative strokes terminating on the ground are the types of most interest in designing shielding systems and the following discussion will be confined to those types.

3.2.2 Stepped leaders

The actual stroke development occurs in a two-step process. The first step is ionization of the air surrounding the charge center and the development of stepped leaders, which propagate charge from the cloud into the air. Current magnitudes associated with stepped leaders are small (in the order of 100 A) in comparison with the final stroke current (Wagner [B142]). The stepped leaders progress in a random direction in discrete steps from 10 to 80 m in length. Their most frequent velocity of propagation is about 0.05% the speed of light, or approximately 150 000 m/s (Anderson [B7]). This produces electric fields near ground with rise times on the order of 100 to 500 microseconds. Electric fields of 250 microseconds from switching surge overvoltages tend to produce the minimum electrical strength of large air gaps compared to 1.2/50 microsecond lightning overvoltages. It is not until the stepped leader is within striking distance of the point to be struck that the leader is positively diverted toward this point. Striking distance is the length of the last step of leader under the influence of attraction toward the point of opposite polarity to be struck.

Copyright © 2013 IEEE. All rights reserved.

Copyright The Institute of Electrical and Electronics Engineers, Inc.
Provided by IHS under license with IEEE
No reproduction or networking permitted without license from IHS

Order Number: 02120914
Sold to:EGAT [700166108393] - VARRIS.Y@EGAT.CO.TH,
Not for Resale,2016-09-15 03:57:48 UTC

3.2.3 Return stroke

The second step in the development of a lightning stroke is the return stroke. The return stroke is the extremely bright streamer that propagates upward from the earth to the cloud following the same path as the main channel of the downward stepped leader. This return stroke is the actual flow of stroke current that has a median value of about 24 000 A and is actually the flow of charge from earth (flat ground) to cloud to neutralize the charge center (Mousa and Srivastava [B109]). The velocity of the return stroke propagation is lower than the speed of light and varies with atmospheric conditions; an approximate value can be 10% of the speed of light (Rakov and Uman [B126]).

The amount of charge (usually negative) descending to the earth from the cloud is equal to the charge (usually positive) that flows upward from the earth. Since the propagation velocity of the return stroke is so much greater than the propagation velocity of the stepped leader, the return stroke exhibits a much larger current flow (rate of charge movement). The various stages of a stroke development are shown in Figure 2. Approximately 55% of all lightning flashes consist of multiple strokes that traverse the same path formed by the initial stroke. The leaders of subsequent strokes have a propagation velocity much greater than that of the initial stroke (approximately 3% the speed of light) and are referenced as *dart leaders* (Wagner [B142]).

Copyright © 2013 IEEE. All rights reserved.
Copyright The Institute of Electrical and Electronics Engineers, Inc.
Provided by IHS under license with IEEE
No reproduction or networking permitted without license from IHS
Order Number: 02120914
Sold to:EGAT [700166108393] - VARRIS.Y@EGAT.CO.TH,
Not for Resale,2016-09-15 03:57:48 UTC

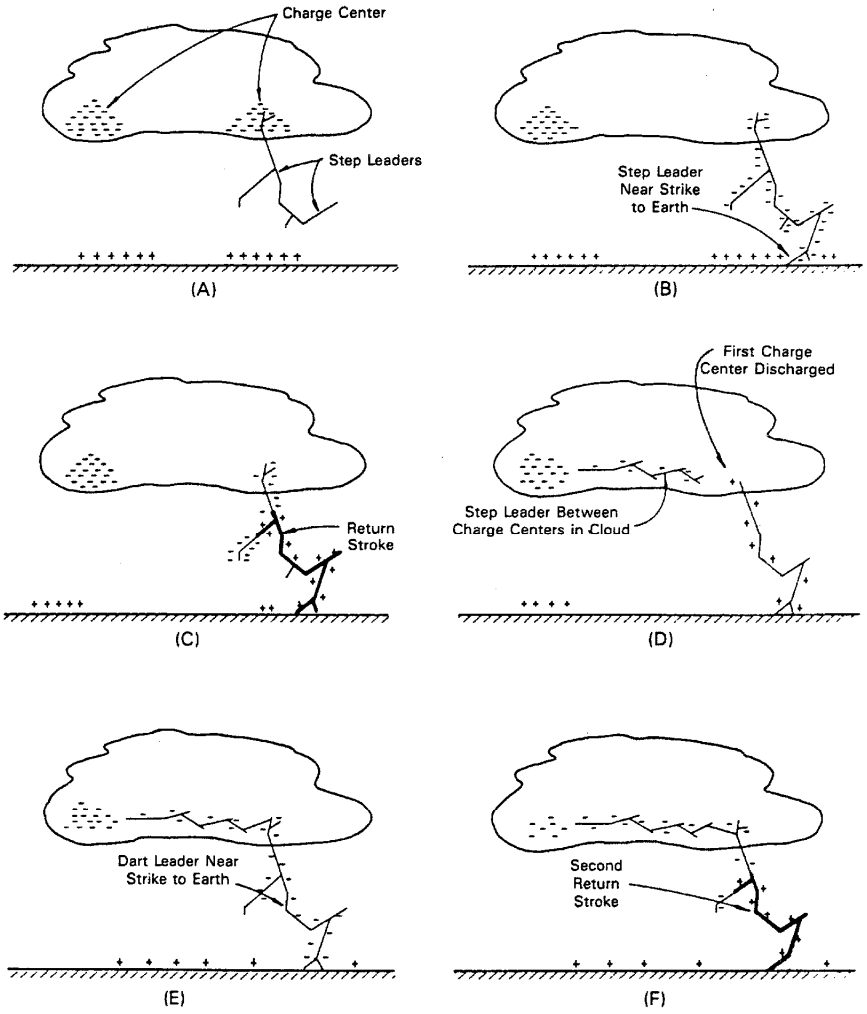

Adapted from: *Electrical Transmission and Distribution Reference Book,* by Central Station Engineers of the Westinghouse Electric Corporation, East Pittsburgh, Pennsylvania, Fourth Edition, 1964.

Figure 2—Charge distribution at various stages of lightning discharge

3.3 Striking distance

The lightning attachment process is a complex process, and one of the least understood parts of lightning discharges. There are many models of the lightning attachment process and they can produce different, often conflicting, values for the protective radius of lightning air terminals. Return stroke current magnitude and striking distance (length of the last stepped leader) are interrelated. A number of equations have been proposed for determining the striking distance. The principal ones are as follows:

$$S = 2I + 30(1 - e^{-I/6.8}) \qquad \text{Darveniza [B44]} \qquad (1)$$

$$S = 10I^{0.65} \qquad \text{Love [B7] [B77]} \qquad (2)$$

Copyright © 2013 IEEE. All rights reserved.
Copyright The Institute of Electrical and Electronics Engineers, Inc.
Provided by IHS under license with IEEE
No reproduction or networking permitted without license from IHS
Order Number: 02120914
Sold to:EGAT [700166108393] - VARRIS.Y@EGAT.CO.TH,
Not for Resale,2016-09-15 03:57:48 UTC

$$S = 9.4I^{2/3}$$ Whitehead [B146] (3)

$$S = 8I^{0.65}$$ IEEE [B77] (4)

$$S = 3.3I^{0.78}$$ Suzuki [B136] (5)

where

S is striking distance in meters
I is the return stroke current in kiloamperes

It can be disconcerting to note that Equation (1), Equation (2), and Equation (3), vary by as much as a factor of 2:1. The Working Group makes use of the shorter striking distances given by Equation (4) throughout this guide. J. G. Anderson adopted Equation (2) in the 1975 edition of the *Transmission Line Reference Book* [B7], and then Equation (4). Mousa [B112] also supports this form of the equation. Scientific research is ongoing and lightning experts can revise their position.

Equation (4) has been adopted for this guide and restated as follows:

$$I = 0.041S^{1.54} \quad (6)$$

This relationship is shown graphically in Figure 3.

Eriksson was the first of several researchers in the late 1980s to refine the calculation of striking distance by introducing height dependence. Height dependence, as well as geometry-specific gap factors, is an important part of switching surge overvoltage coordination, and this has guided development of leader progression models for the final jump. CIGRE Technical Brochure 118 [B34] provides a balanced review of the proposed models using these theories.

The refined Eriksson equations for striking distance including structure height are shown in Equation (7) for shield masts and Equation (8) for shield wires [B46].

$$S = 0.84I^{0.74}H^{0.6} \quad (7)$$

$$S = 0.67I^{0.74}H^{0.6} \quad (8)$$

where

S is striking distance in meters
I is the return stroke current in kiloamperes
H is the structure height in meters

--`,,,,,,`,```,,``,`,,`,-`-``,```,,,`---
Copyright © 2013 IEEE. All rights reserved.
Copyright The Institute of Electrical and Electronics Engineers, Inc.
Provided by IHS under license with IEEE
No reproduction or networking permitted without license from IHS
Order Number: 02120914
Sold to:EGAT [700166108393] - VARRIS.Y@EGAT.CO.TH,
Not for Resale,2016-09-15 03:57:48 UTC

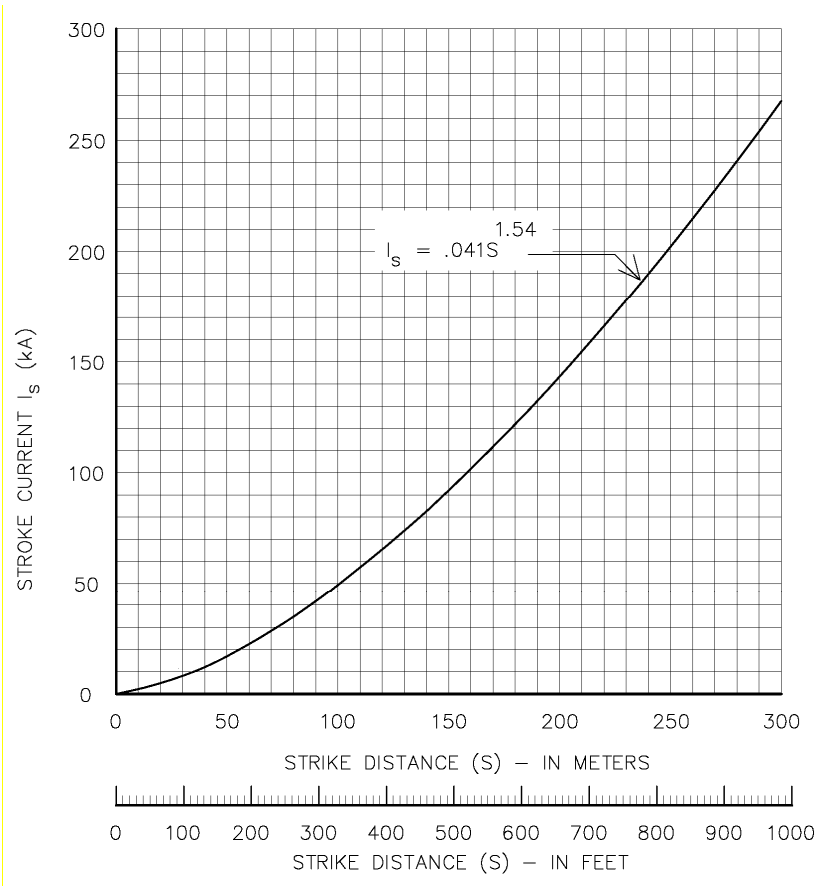

Figure 3—Stroke current versus striking distance

3.4 First negative return stroke current magnitude

The striking distance is correlated to the impulse charge, which in turn has a good correlation coefficient of 0.77 with peak negative first stroke current (Mousa and Srivastava [B19]). Since the stroke current and striking distance are related, it is of interest to know the distribution of stroke current magnitudes. The median value of strokes to overhead ground wire (OHGW), conductors, structures, and masts is often taken to be 31 kA (Anderson [B7]). Anderson [B7] gave the probability that a certain peak current will be exceeded in any stroke as follows:

$$P(I) = \frac{1}{1+\left(\frac{I}{31}\right)^{2.6}} \tag{9}$$

where

$P(I)$ is the probability that the peak current in any stroke will exceed I_s
I is the specified crest current of the stroke in kiloamperes

Mousa [B109] has proposed the use of a median stroke current of 24 kA as shown in Equation (10) for strokes to flat ground as these coorelated with available field observations at the time. This gives a superior

Copyright © 2013 IEEE. All rights reserved.
Copyright The Institute of Electrical and Electronics Engineers, Inc.
Provided by IHS under license with IEEE
No reproduction or networking permitted without license from IHS
Order Number: 02120914
Sold to:EGAT [700166108393] - VARRIS.Y@EGAT.CO.TH,
Not for Resale,2016-09-15 03:57:48 UTC

fit to the recommended CIGRE log-normal curve [B35] than Equation (9) in the shielding failure regime below 12 kA.

$$P(I) = \frac{1}{1 + \left(\frac{I}{24}\right)^{2.6}} \tag{10}$$

where the symbols have the same meaning as above.

Figure 4 is a plot of Equation (10), and Figure 5 is a plot of the probability that a stroke will be within the ranges shown on the abscissa.

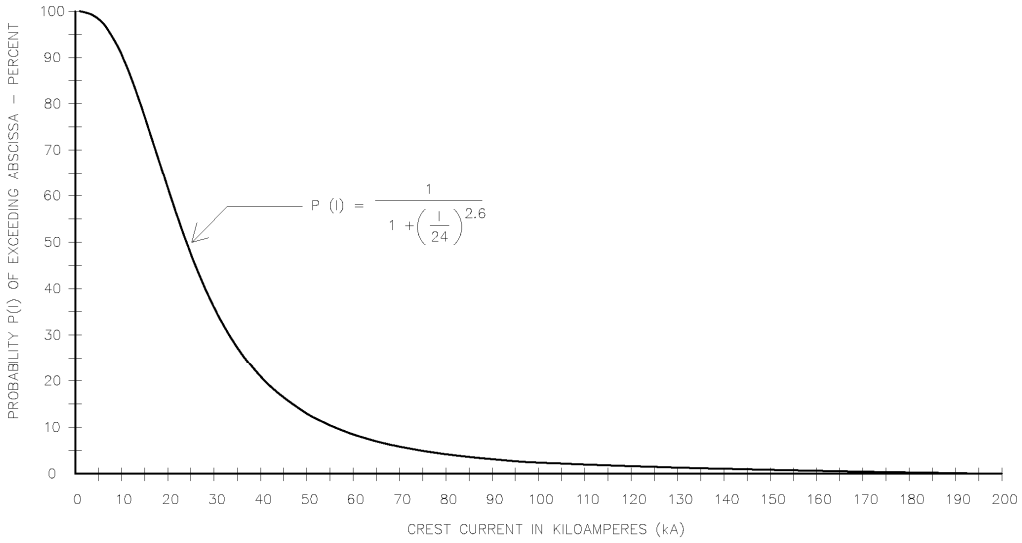

Figure 4—Probability of first negative return stroke peak current exceeding abscissa for strokes to flat ground

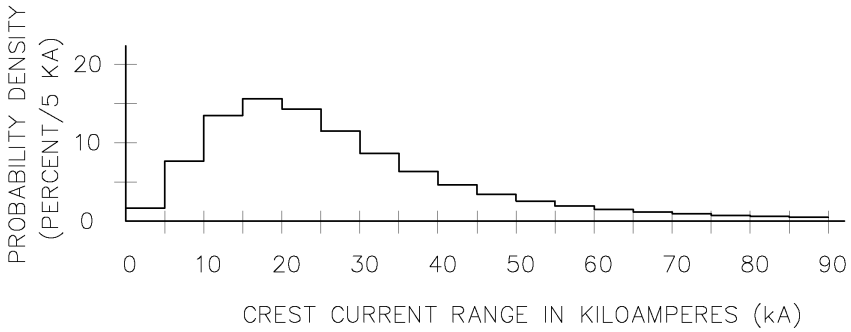

Figure 5—First negative return stroke peak current range probability for strokes to flat ground

Copyright © 2013 IEEE. All rights reserved.

Copyright The Institute of Electrical and Electronics Engineers, Inc.
Provided by IHS under license with IEEE
No reproduction or networking permitted without license from IHS

Order Number: 02120914
Sold to:EGAT [700166108393] - VARRIS.Y@EGAT.CO.TH,
Not for Resale,2016-09-15 03:57:48 UTC

3.5 Keraunic level

Keraunic level is defined as the average annual number of thunderstorm days or hours for a given locality. A *thunderstorm day* is a day (24 hours) during which thunder has been heard at least once. By this definition, it makes no difference how many times thunder is heard during a 24-hour period. In other words, if thunder is heard on any one day more than one time, the day is still classified as one thunder-day (or thunderstorm day). *Isokeraunic level* is the average number of thunderstorm days in a year.

The National Oceanic and Atmospheric Administration (NOAA) now maintains hourly thunderstorm records. An *hourly keraunic level* is the average number of hours per year on which thunder will be heard during a 1-hour rain period. In other words, if thunder is heard on any one hour more than one time, the hour is still classified as one thunder-hour (or thunderstorm hour). This provides a more accurate picture of the lightning density in a given area.

The average annual keraunic level for locations in the United States can be determined by referring to isokeraunic maps on which lines of equal keraunic level are plotted on a map of the country. Figure 6, Figure 7, and Figure 8 give the mean annual thunderstorm days for the United States, Canada, and the world. Figure 9 shows the keraunic level for the United States based on thunderstorm-hours. This latter data was prepared by MacGorman, Maier, and Rust for the Nuclear Regulatory Commission under the auspices of NOAA [B90].

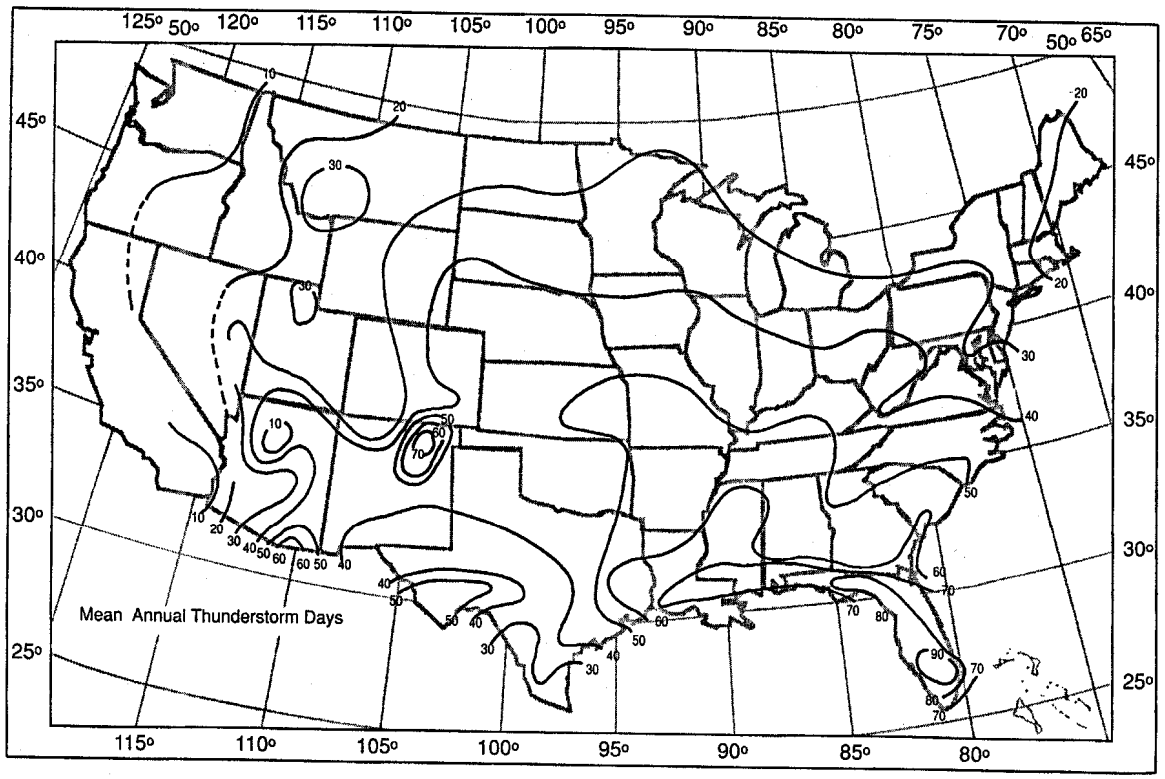

(Source: The National Oceanic and Atmospheric Administration [B90].)

Figure 6—Mean annual thunderstorm days, United States

Copyright © 2013 IEEE. All rights reserved.

Copyright The Institute of Electrical and Electronics Engineers, Inc.
Provided by IHS under license with IEEE
No reproduction or networking permitted without license from IHS

Order Number: 02120914
Sold to:EGAT [700166108393] - VARRIS.Y@EGAT.CO.TH,
Not for Resale,2016-09-15 03:57:48 UTC

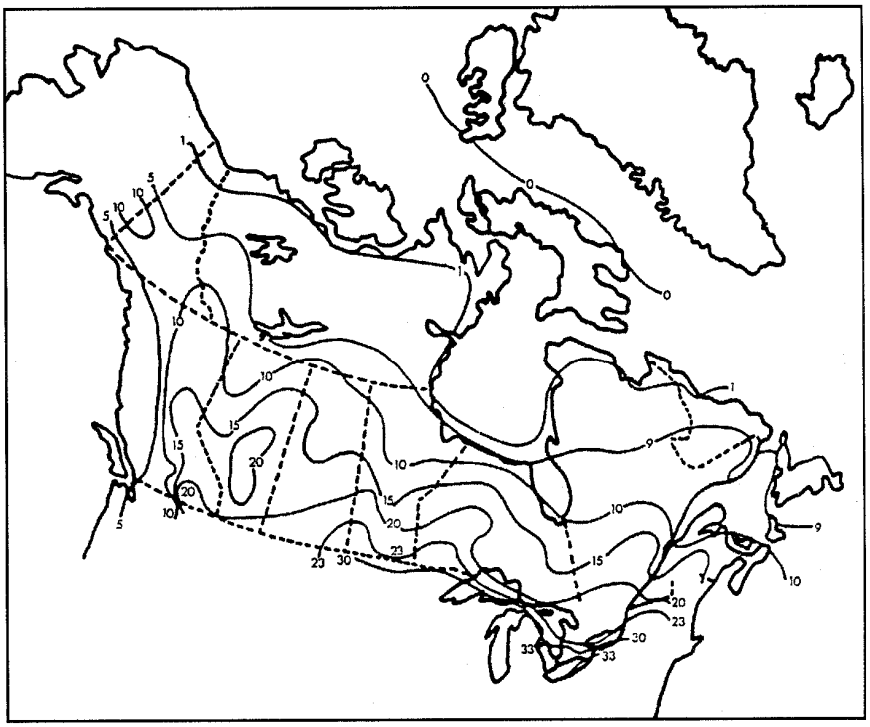

(Data from Meteorological Division, Department of Transportation, Canada. Copyright © Environment Canada, used with permission.)

Figure 7—Mean annual thunderstorm days, Canada

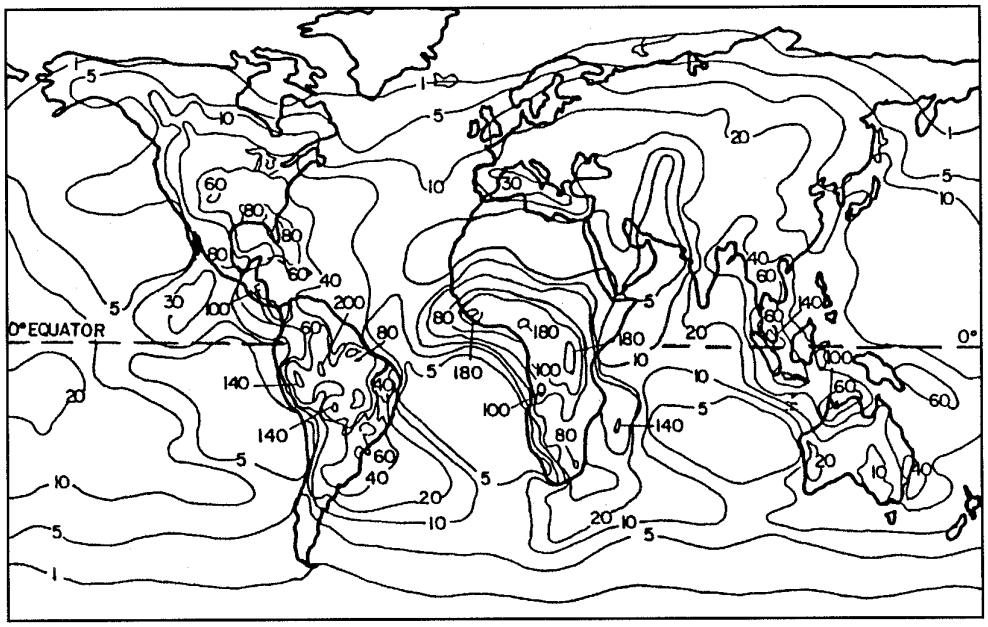

(Source: The National Oceanic and Atmospheric Administration [B90].)

Figure 8—Mean annual thunderstorm days, the world

Copyright © 2013 IEEE. All rights reserved.

Copyright The Institute of Electrical and Electronics Engineers, Inc.
Provided by IHS under license with IEEE
No reproduction or networking permitted without license from IHS

Order Number: 02120914
Sold to:EGAT [700166108393] - VARRIS.Y@EGAT.CO.TH,
Not for Resale,2016-09-15 03:57:48 UTC

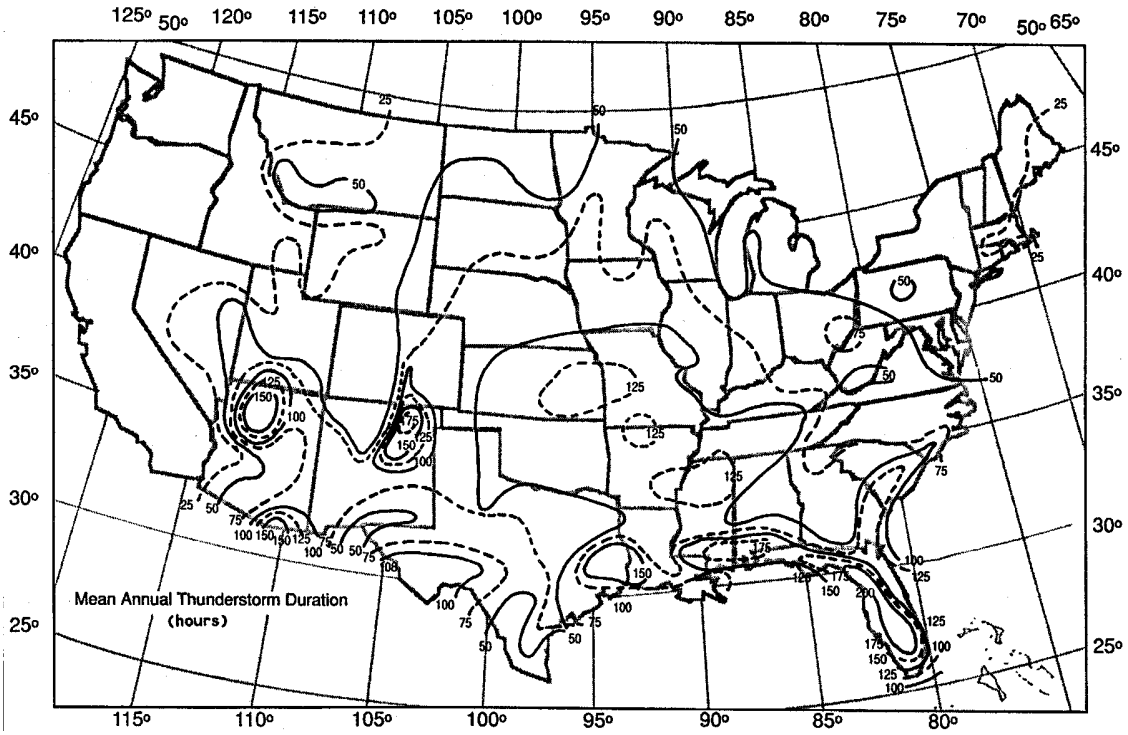

(Source: The National Oceanic and Atmospheric Administration [B90].)

Figure 9—Mean annual thunderstorm duration (hours), United States

3.6 Ground flash density

Ground flash density (GFD) is defined as the average number of lightning strokes per unit area per unit time at a particular location. It is usually assumed that the GFD to earth, a substation, or a transmission or distribution line is roughly proportional to the keraunic level at the locality. Table 1 gives various equations for GFD that have been developed by various researchers around the world. These researchers arrived at a proportional relationship ranging from $0.1\,T$ to $0.19\,T$ ground flashes per square kilometer per year, where T is the average annual keraunic level. If thunderstorm days are to be used as a basis, it is suggested that either Equation (11) or Equation (12) (Anderson [B7]) be used:

$$N_k = 0.12T_d \tag{11}$$

$$N_m = 0.31T_d \tag{12}$$

where

N_k is the number of flashes to earth per square kilometer per year
N_m is the number of flashes to earth per square mile per year
T_d is the average annual keraunic level, thunderstorm days

Copyright © 2013 IEEE. All rights reserved.
Copyright The Institute of Electrical and Electronics Engineers, Inc.
Provided by IHS under license with IEEE
No reproduction or networking permitted without license from IHS
Order Number: 02120914
Sold to:EGAT [700166108393] - VARRIS.Y@EGAT.CO.TH,
Not for Resale,2016-09-15 03:57:48 UTC

If thunderstorm hours are to be used as a basis, Equation (13) or Equation (14) by MacGorman, Maier, and Rust [B90] is suggested.

$$N_k = 0.054 T_h^{1.1} \tag{13}$$

or

$$N_m = 0.14 T_h^{1.1} \tag{14}$$

where

T_h is the average annual keraunic level, thunderstorm hours

Table 1—Empirical relationships between lightning ground flash density and annual thunder-days (T)

Location	Ground Flash Density Ground Flashes/km^2/year	Reference
World (Temperate Areas)	$0.040T^{1.25}$	Anderson [B7], [B8], [B9]
Mexico	$0.024T^{1.12}$	IEEE Std 1410™-2010 [B74]
Brazil	$0.030T^{1.12}$	IEEE Std 1410-2010
Columbia	$0.0017T^{1.56}$	IEEE Std 1410-2010
South Africa	$0.04T^{1.25}$	Eriksson [B50]
Sweden	$0.004T^{2}$ (approx.)	Muller-Hillebrand [B114]
United Kingdom	$.0026T^{1.9}$	Stringfellow [B136]
United States (North)	$0.11T$	Horn and Ramsey [B64]
United States (South)	$0.17T$	Horn and Ramsey [B64]
United States	$0.10T$	Anderson et al. [B10]
United States	$0.15T$	Brown and Whitehead [B25]
Russia	$0.036T^{1.30}$	Kolokolov and Pavlova [B80]
World (Temperate Climate)	$0.15T$	Golde [B57]

Copyright © 2013 IEEE. All rights reserved.

Copyright The Institute of Electrical and Electronics Engineers, Inc.
Provided by IHS under license with IEEE
No reproduction or networking permitted without license from IHS

Order Number: 02120914
Sold to:EGAT [700166108393] - VARRIS.Y@EGAT.CO.TH,
Not for Resale,2016-09-15 03:57:48 UTC

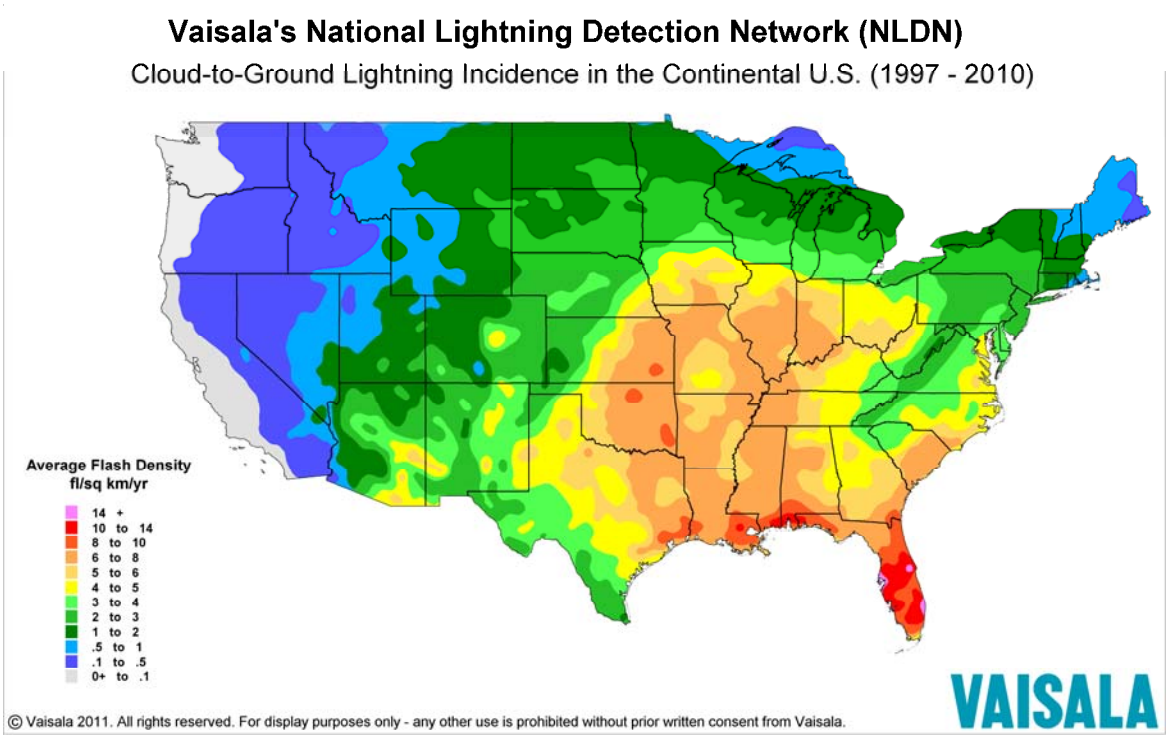

(Reprinted with permission from Vaisala, copyright © 2011.)

Figure 10—Ground flash density map of contiguous United States

3.7 Lightning detection networks

Lightning detection networks have been installed in North America and other parts of the world. These lightning detection networks have improved the accuracy of ground flash density maps as shown in Figure 10.

Vaisala's National Lightning Detection Network contains over 100 ground-based lightning detection systems in the United States. Whenever lightning strikes the earth, the electromagnetic signal is detected and information is relayed to a satellite-based network. Users of the system can receive information such as time, location, amplitude, and polarity of each strike within seconds.

Studies from lightning data captured from this network have provided a wealth of new information about lightning activity. There can be up to 20 return strokes in a flash and these flashes can terminate in multiple locations. Separation of these return flashes can vary up to 7 km.

4. The design problem

The engineer who seeks to design a direct stroke shielding system for a substation or facility must contend with several elusive factors inherent with lightning phenomena, namely:

a) The unpredictable, probabilistic nature of lightning

b) The lack of data due to the infrequency of lightning strokes in substations

c) The complexity and economics involved in analyzing a system in detail

Copyright © 2013 IEEE. All rights reserved.

Copyright The Institute of Electrical and Electronics Engineers, Inc.
Provided by IHS under license with IEEE
No reproduction or networking permitted without license from IHS

Order Number: 02120914
Sold to:EGAT [700166108393] - VARRIS.Y@EGAT.CO.TH,
Not for Resale,2016-09-15 03:57:48 UTC

There is no known method of providing 100% shielding. The uncertainty, complexity, and cost of performing a detailed analysis of a shielding system has historically resulted in simple "rules of thumb" being utilized in the design of lower voltage facilities. Extra-high voltage (EHV) facilities, with their critical and more costly equipment components, usually justify a more sophisticated study to establish the risk versus cost benefit. There is now cost effective, commercially available software to help in the analysis of lightning shielding.

Because of the above factors, it is suggested that an approach including at least the following four steps be utilized in the design of a protection system:

a) Evaluate the importance and value of the facility being protected.

b) Investigate the severity and frequency of thunderstorms in the area of the substation facility and the exposure of the substation.

c) Select an appropriate design method consistent with the above evaluation and then lay out an appropriate system of protection.

d) Evaluate the effectiveness and cost of the resulting design.

The following clauses and the bibliography can assist the engineer in performing these steps.

CAUTION

This guide makes no claim as to the accuracy, applicability, or preference of any of the following design methods in Clause 5, Clause 6, and Clause 7.

5. Empirical design methods

Two classical design methods have historically been employed to protect substations from direct lightning strokes:

a) Fixed angles

b) Empirical curves

These two methods have generally provided acceptable protection.

5.1 Fixed angles

It is not known when the use of fixed angles first began. F. W. Peek, Jr., and other investigators recognized as early as 1924 [B119] that the area protected by a rod was bounded by a curved surface rather than a plane surface. It is likely, therefore, that fixed angles were originally used by designers as a convenient approximation of the boundary of protection against lightning strokes. Wagner, McCann, and MacLane, Jr., formalized the use of fixed angles in 1941 [B145]. The fixed angle continues in use today as a design method.

The fixed-angle design method uses vertical angles to determine the number, position, and height of shielding wires or masts. Figure 11 illustrates the method for shielding wires, and Figure 12 illustrates the method for shielding masts.

Copyright © 2013 IEEE. All rights reserved.
--`,,,,,,`,```,,`,,`,,`,-`-`,,`,,,`,---
Copyright The Institute of Electrical and Electronics Engineers, Inc.
Provided by IHS under license with IEEE
No reproduction or networking permitted without license from IHS
Order Number: 02120914
Sold to:EGAT [700166108393] - VARRIS.Y@EGAT.CO.TH,
Not for Resale,2016-09-15 03:57:48 UTC

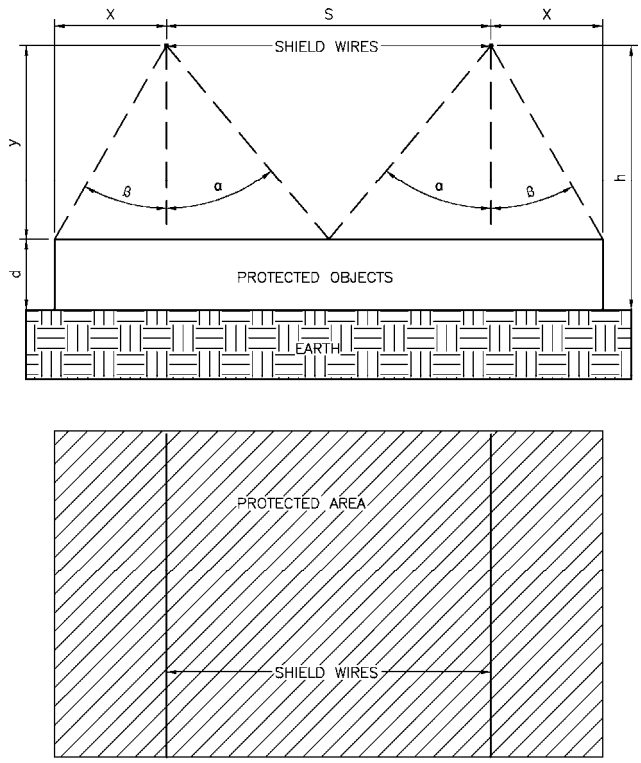

Figure 11—Fixed angles for shielding wires

The angles used are determined by the degree of lightning exposure, the importance of the substation being protected, and the physical area occupied by the substation. Referring to Figure 11 and Figure 12, the value of the angle alpha that is commonly used is 45 degrees. Both 30 degrees and 45 degrees are widely used for angle beta.

Designers using the fixed-angle method can reduce the shielding angles as the height of the structures increases in order to maintain a low failure rate. Horvath [B65], using the electrogeometric model (EGM), calculated shielding failures as a function of the height of the conductor above ground and the protective angle for transmission lines. The protective angle is decreased as the protective wire height is increased.

Copyright © 2013 IEEE. All rights reserved.

Copyright The Institute of Electrical and Electronics Engineers, Inc.
Provided by IHS under license with IEEE
No reproduction or networking permitted without license from IHS

Order Number: 02120914
Sold to:EGAT [700166108393] - VARRIS.Y@EGAT.CO.TH,
Not for Resale,2016-09-15 03:57:48 UTC

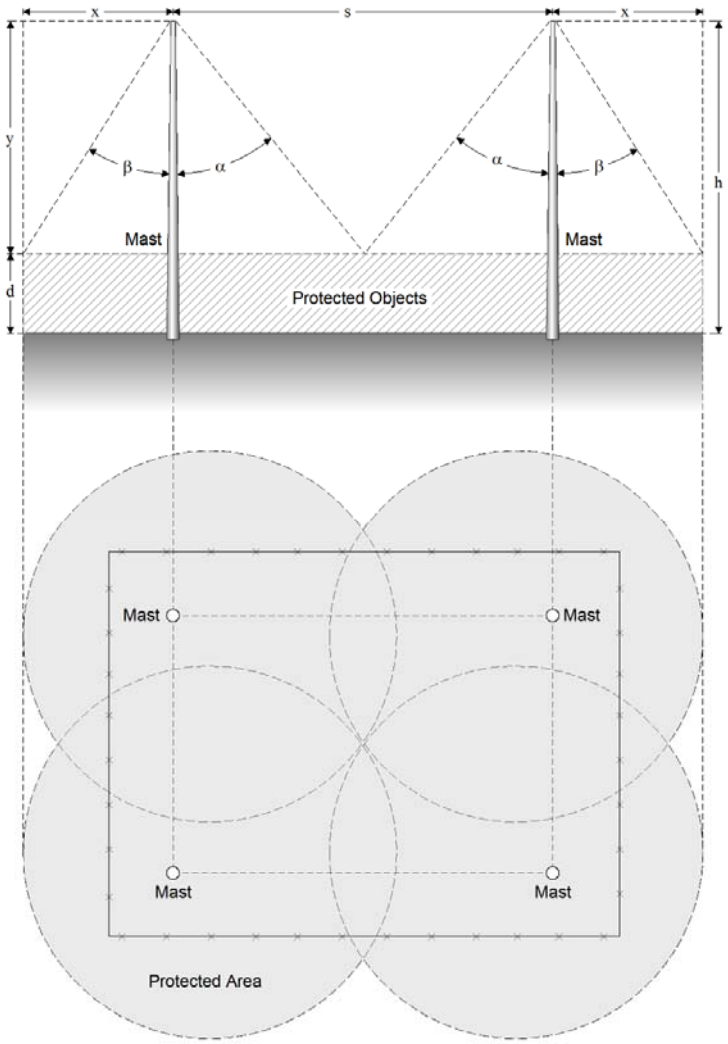

Figure 12—Fixed angles for masts

Horvath suggests a protective angle of 40 degrees to 45 degrees for heights up to 15 m (49 ft), 30 degrees for heights between 15 and 25 m (49 to 82 ft), and less than 20 degrees for heights to 50 m (164 ft). A failure rate of 0.1 to0.2 shielding failures/100 km/year was assumed in these recommendations. (Horvath did not state the ground flash density used in his example.) This approach could also be used for selecting shielding angles for shield wires in substations.

A similar approach could be used for applying lightning masts in substations. Horvath suggested using the rolling sphere method to compile a table of shielding angles versus conductor heights.

5.2 Origin of empirical curves

The use of empirical curves finds its origin in a paper published in 1941 by Wagner, McCann, and MacLane [B145]. Scale model tests were conducted employing a 1.5 × 40 μs positive impulse to initiate a

Copyright © 2013 IEEE. All rights reserved.
Copyright The Institute of Electrical and Electronics Engineers, Inc.
Provided by IHS under license with IEEE
No reproduction or networking permitted without license from IHS
Order Number: 02120914
Sold to:EGAT [700166108393] - VARRIS.Y@EGAT.CO.TH,
Not for Resale,2016-09-15 03:57:48 UTC

discharge from a rod (representing the charged cloud) to a ground plane or a horizontal shield wire and conductor located near the electrode. The relative spacing of the electrode, shield wire, and conductor was varied with each discharge so as to produce an adequate database for analysis. Plots were then made from this database showing the percent of discharges striking the shield wire, conductor, or ground plane. The authors also studied the lightning performance of many existing lines and the shielding system used and correlated the findings with their scale model work. The resulting recommendations have been used for over 60 years and continue to be used.

The following year, 1942, Wagner, McCann, and Lear published a paper on shielding of substations [B144]. These investigations were based on additional scale model tests, and a series of curves were developed relating height and spacing of shield wires and masts to various failure rates. These curves produce a more accurate design than straight-line approximations. This design method also continues to find wide use today.

5.3 Application of empirical curves

From field studies of lightning and laboratory model tests, empirical curves have been developed to determine the number, position, and height of shielding wires and masts (Wagner [B142]), (Wagner, McCann, and Beck [B143]), (Wagner, McCann, and Lear [B144]).

The curves were developed for shielding failure rates of 0.1%, 1.0%, 5.0%, 10%, and 15%. Curves for different configurations of shielding wires and masts are shown in Figure A.1, Figure A.2, Figure A.3, Figure A.4, Figure A.5, and Figure A.6 of Annex A for failure rates of 0.1% and 1.0%. A failure rate of 0.1% is commonly used in design.

Figure A.1, Figure A.2, Figure A.3, Figure A.4, Figure A.5, and Figure A.6 use ratios of *d/h*, *x/h*, and *s/h*, which were used in the original study (Wagner, McCann, and Lear [B144]). Figure 13, Figure 14, Figure 15, Figure 16, Figure 17, and Figure 18 have been developed using Figure A.1, Figure A.2, Figure A.3, Figure A.4, Figure A.5, and Figure A.6 for a variety of protected object heights, *d*, to eliminate the necessity of using ratios. For a given *x/h (s/h)* ratio along the abscissa in Figure A.1, Figure A.2, Figure A.3, Figure A.4, Figure A.5, and Figure A.6, the ordinate value yields a *d/h* ratio for a desired failure rate. For each selected value of *d*, a value of *h* for each discrete value of *x/h* can be calculated as $h = d/(d/h)$. Now, for these discrete values of *h* for a selected *d*, values of the horizontal separation, *x(s)*, can be calculated from $x = x/h \times h$ $(s = s/h \times h)$. The difference between the protected object height, *d*, and the shielding mast, or wire, height, *h*, can be calculated as $y = h - d$. These values of *y* can be plotted as a continuous curve *f(x, y)* for a constant value *d* as shown in Figure 13, Figure 14, Figure 15, Figure 16, Figure 17, and Figure 18. For example, in Figure A.2, data points from the original study appear to be plotted at *x/h* values of 0.25, 0.6, and 1.0. At the value of *x/h* equal to 0.6, *d/h* is estimated to be 0.46 for a 0.1% failure rate.

For $d = 6.1$ m (20 ft):

$h = 6.1/0.46 = 13.26$ m $(20/0.46 = 43.48$ ft)

$x = 0.6 \times 13.26 = 7.96$ m $(0.6 \times 43.48 = 26.09$ ft)

$y = 13.26 - 6.1 = 7.16$ m $(43.48 - 20 = 23.48$ ft)

Similarly, values of *d/h* can be estimated for other values of *x/h* and the resulting *x* and *y* values plotted for each selected value of *d* for each failure rate. These particular values are illustrated in Figure 13.

Copyright © 2013 IEEE. All rights reserved.

Copyright The Institute of Electrical and Electronics Engineers, Inc.
Provided by IHS under license with IEEE
No reproduction or networking permitted without license from IHS

Order Number: 02120914
Sold to:EGAT [700166108393] - VARRIS.Y@EGAT.CO.TH,
Not for Resale,2016-09-15 03:57:48 UTC

CAUTION

The user is warned not to extrapolate the curves of Figure 13, Figure 14, Figure 15, Figure 16, Figure 17, and Figure 18 beyond their limits as plotted. Such extrapolations can result in exposures beyond the listed values.

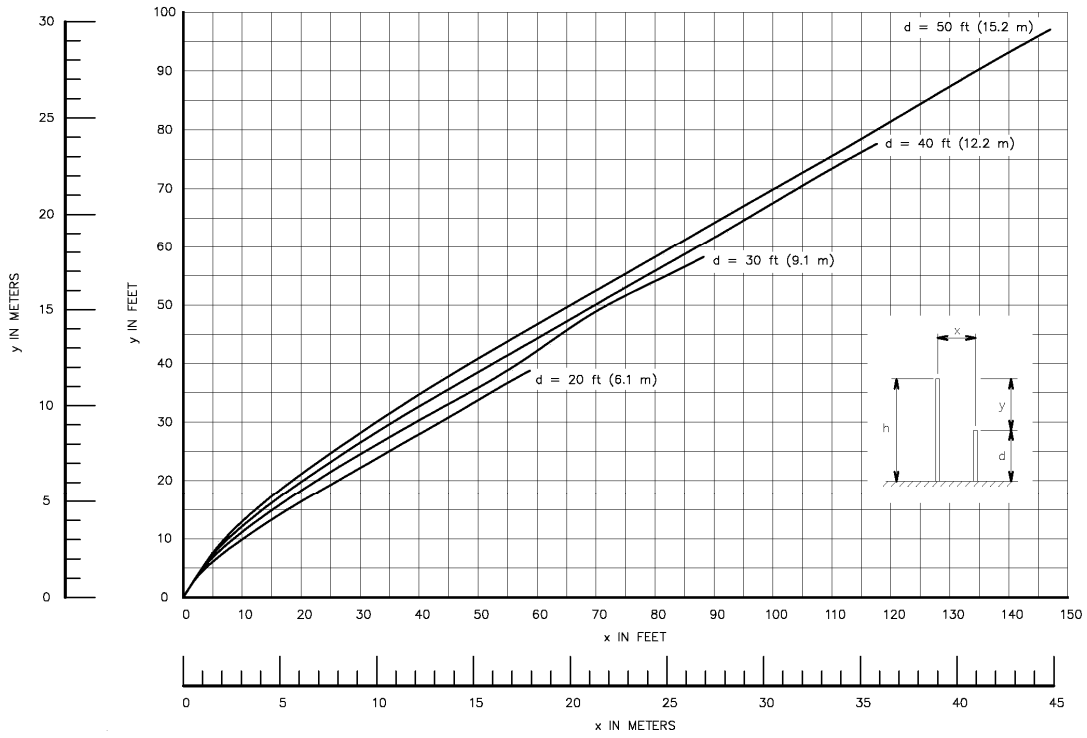

Figure 13—Single lightning mast protecting single object—0.1% exposure. Height of lightning mast above protected object, *y*, as a function of horizontal separation, *x*, and height of protected object, *d*.

Copyright © 2013 IEEE. All rights reserved.

Copyright The Institute of Electrical and Electronics Engineers, Inc.
Provided by IHS under license with IEEE
No reproduction or networking permitted without license from IHS

Order Number: 02120914
Sold to:EGAT [700166108393] - VARRIS.Y@EGAT.CO.TH,
Not for Resale,2016-09-15 03:57:48 UTC

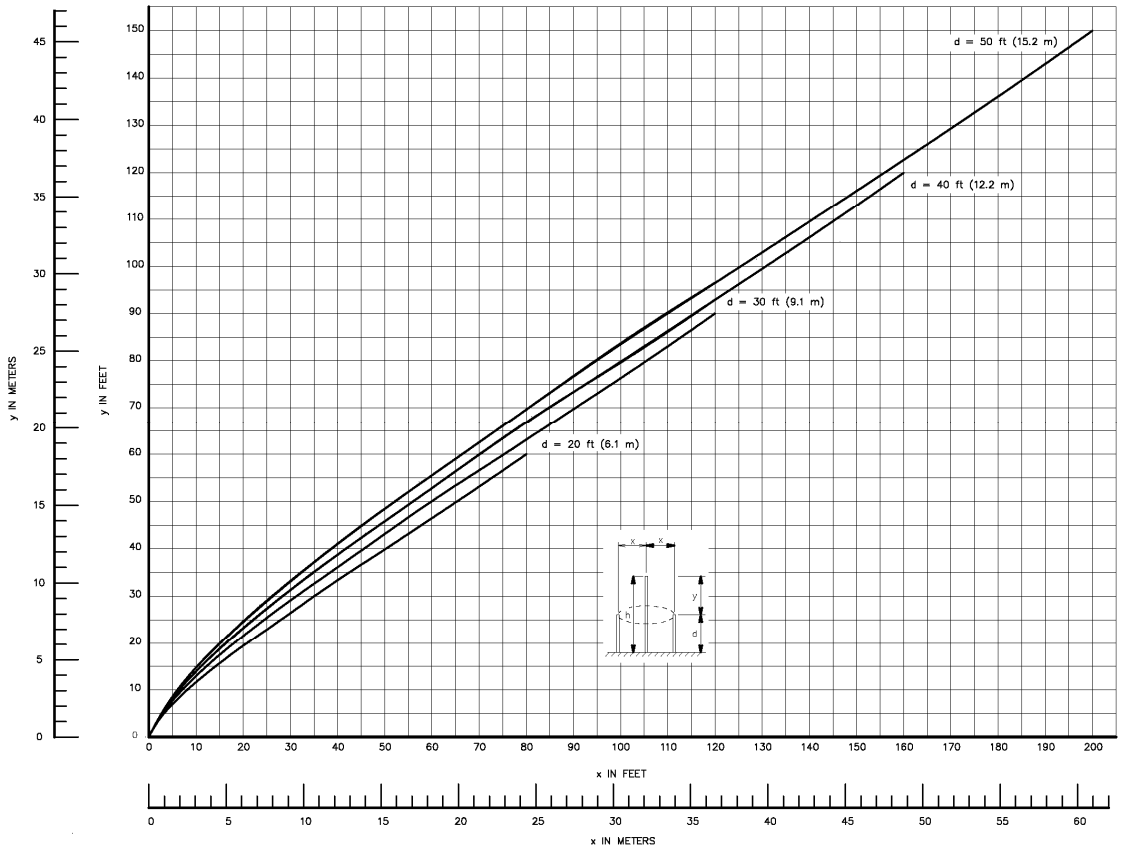

Figure 14—Single lightning mast protecting single ring of objects—0.1% exposure. Height of lightning mast above protected object, *y,* as a function of horizontal separation, *x*, and height of protected object, *d.*

Copyright © 2013 IEEE. All rights reserved.

Copyright The Institute of Electrical and Electronics Engineers, Inc.
Provided by IHS under license with IEEE
No reproduction or networking permitted without license from IHS

Order Number: 02120914
Sold to:EGAT [700166108393] - VARRIS.Y@EGAT.CO.TH,
Not for Resale,2016-09-15 03:57:48 UTC

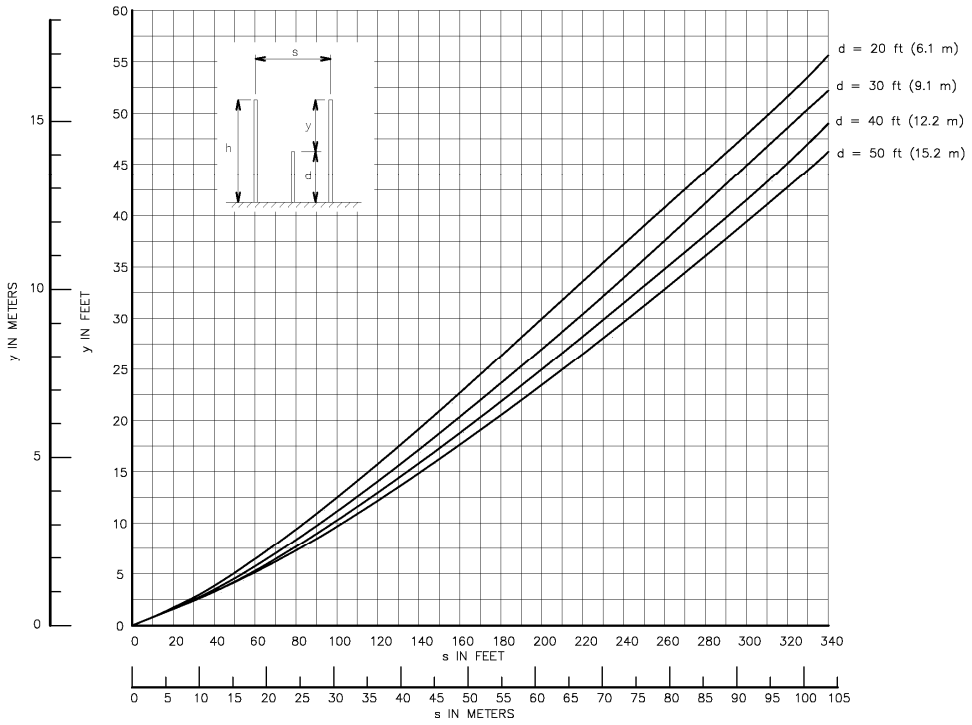

Figure 15—Two lightning masts protecting single object, no overlap—0.1% exposure. Height of mast above protected object, *y*, as a function of horizontal separation, *s*, and height of protected object, *d.*

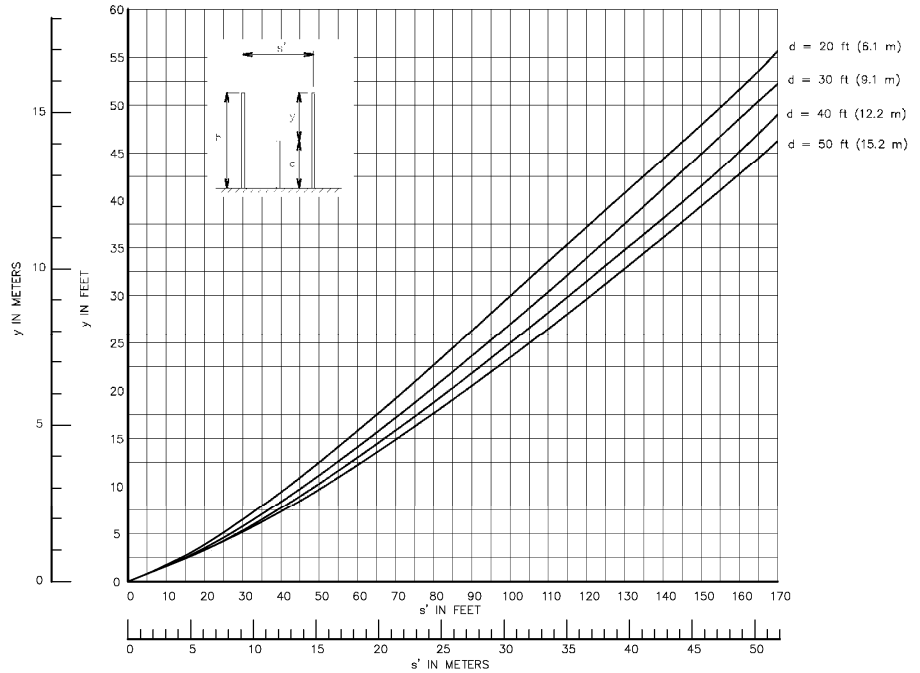

Figure 16—Two lightning masts protecting single object, with overlap 0.1% exposure. Height of mast above protected object, *y*, as a function of horizontal separation, *s*, and height of protected object, *d.*

Copyright © 2013 IEEE. All rights reserved.

Copyright The Institute of Electrical and Electronics Engineers, Inc.
Provided by IHS under license with IEEE
No reproduction or networking permitted without license from IHS

Order Number: 02120914
Sold to:EGAT [700166108393] - VARRIS.Y@EGAT.CO.TH,
Not for Resale,2016-09-15 03:57:48 UTC

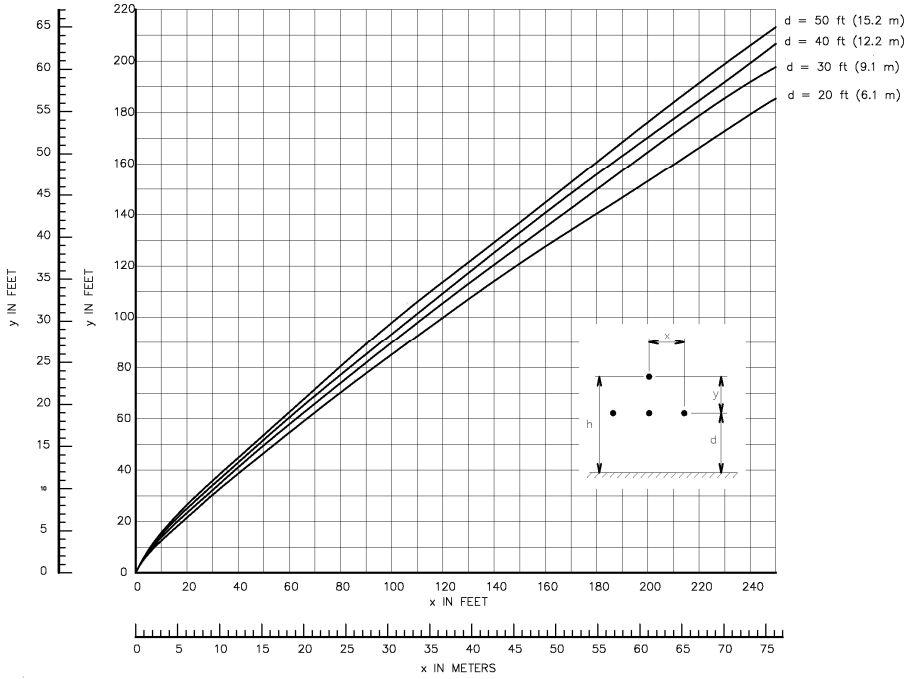

Figure 17—Single shield wire protecting horizontal conductors—0.1% exposure. Height of shield wires above conductors, *y*, as a function of horizontal separation, *x*, and height of protected conductors, *d.*

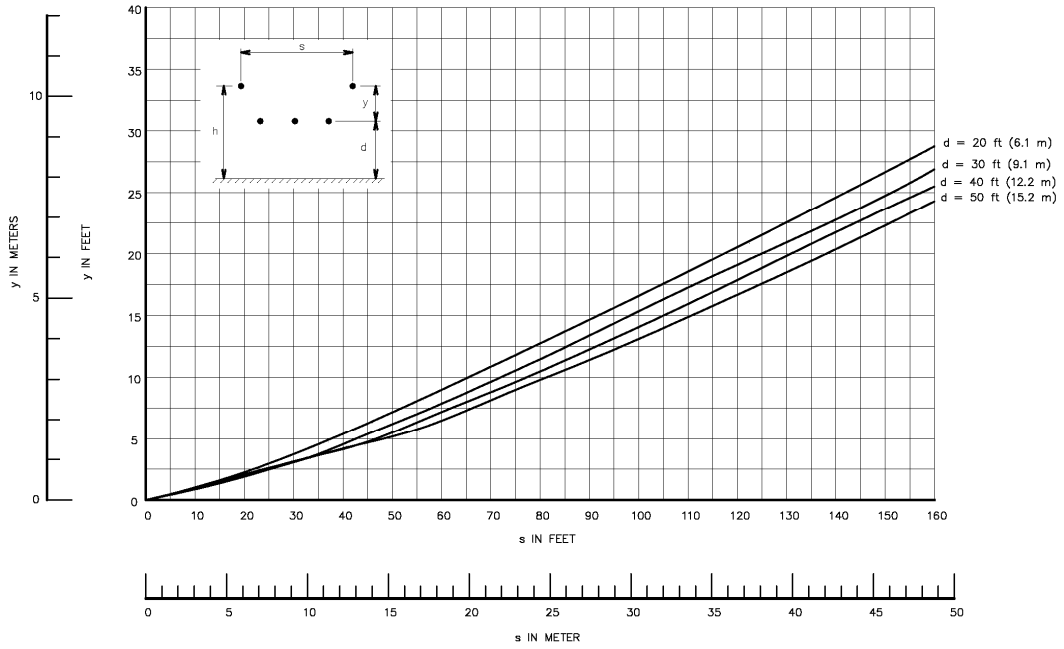

Figure 18—Two shield wires protecting horizontal conductors—0.1% exposure. Height of shield wires above conductors, *y*, as a function of horizontal separation, *s*, and height of protected conductors, *d.*

Copyright © 2013 IEEE. All rights reserved.

Copyright The Institute of Electrical and Electronics Engineers, Inc.
Provided by IHS under license with IEEE
No reproduction or networking permitted without license from IHS

Order Number: 02120914
Sold to:EGAT [700166108393] - VARRIS.Y@EGAT.CO.TH,
Not for Resale,2016-09-15 03:57:48 UTC

To evaluate the expected shielding performance of a substation site, proceed as follows:

a) Determine the ground flash density using Equation (11), Equation (12), Equation (13), or Equation (14).

b) Calculate the number of flashes to the substation area, N_s.

$$N_S = GFD \times A/(1000)^2 \tag{15}$$

where

GFD is the ground flash density in strokes per square kilometer per year
A is the substation area in square meters

c) Calculate number of strokes per year penetrating the shield, *SP*.

$$SP = N_S \times \text{exposure rate} \tag{16}$$

Choose acceptable exposure rate (Example 0.1% or 0.001).

5.4 Areas protected by lightning masts

Figure 19 illustrates the areas that can be protected by two or four shielding masts (Wagner McCann, and Lear [B144]). If two masts are used to protect an area, the data derived from the empirical curves give shielding information only for the point *B*, midway between the two masts, and for points on the semicircles drawn about the masts, with radius *x*, as shown in Figure 19(a). The locus shown in Figure 19(a), drawn by the semicircles with radius *x* around the masts and connecting the point *B*, represents an approximate limit for a selected exposure rate. For given values of *d* and *y*, a value of *s* from Figure 17 and *x* from Figure 15 can be determined for an exposure rate of 0.1%. Any single point falling within the cross-hatched area probably has a < 0.1% exposure. Points outside the cross-hatched area will have > 0.1% exposure. Figure 19(b) illustrates this phenomenon for four masts spaced at the distances as in Figure 19(a).

The protected area can be improved by moving the masts closer together, as illustrated in Figure 20. In Figure 20(a), the protected areas are, at least, as good as the combined areas obtained by superimposing those of Figure 19(a). In Figure 20(a), the distance s' is one-half the distance *s* in Figure 19(a). To estimate the width of the overlap, x', first obtain a value of *y* from Figure 17 corresponding to twice the distance, s', between the masts. Then use Figure 15 to determine x' for this value of *y*. This value of *x* is used as an estimate of the width of overlap x' in Figure 20. As illustrated in Figure 20(b), the size of the areas with an exposure greater than 0.1% has been significantly reduced.

Copyright © 2013 IEEE. All rights reserved.

Copyright The Institute of Electrical and Electronics Engineers, Inc.
Provided by IHS under license with IEEE
No reproduction or networking permitted without license from IHS

Order Number: 02120914
Sold to:EGAT [700166108393] - VARRIS.Y@EGAT.CO.TH,
Not for Resale,2016-09-15 03:57:48 UTC

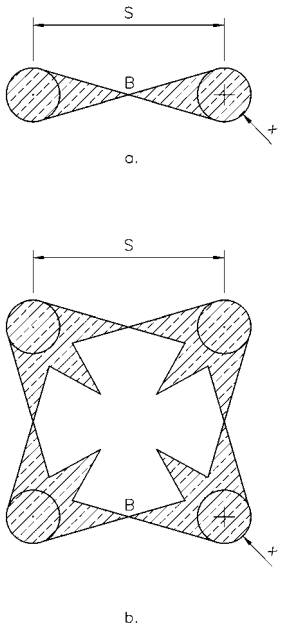

Figure 19—Areas protected by multiple masts for point exposures shown in Figure 14 and Figure 15; (a) with two lightning masts and (b) with four lightning masts

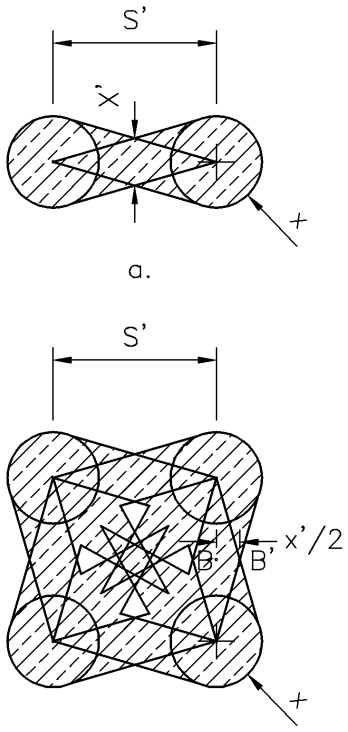

Figure 20—Areas protected by multiple masts for reduced point exposure (a) with two lightning masts and (b) with four lightning masts

Copyright © 2013 IEEE. All rights reserved.
Copyright The Institute of Electrical and Electronics Engineers, Inc.
Provided by IHS under license with IEEE
No reproduction or networking permitted without license from IHS
Order Number: 02120914
Sold to:EGAT [700166108393] - VARRIS.Y@EGAT.CO.TH,
Not for Resale,2016-09-15 03:57:48 UTC

5.5 Effect of hillsides

For the application of the data presented here to stations located on hillsides, the dimensions *h* (the shielding conductor height) and *d* (the height of the protected object) are measured perpendicular to the earth's surface as illustrated in Figure 21 (Wagner, McCann, and Lear, [B144]).

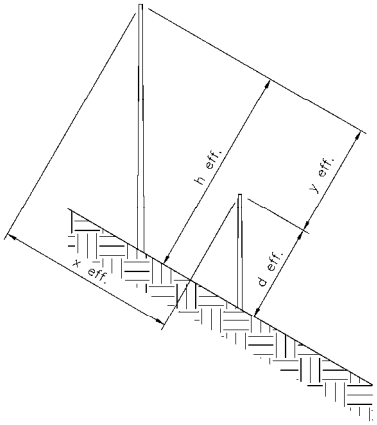

Figure 21—Effect of hillsides

6. The electrogeometric model (EGM)

6.1 History

A rudimentary version of the EGM was developed by Golde in 1945 [B55], but the method was never adapted to shielding systems. In the mid-1950s, the first North American 345 kV transmission lines were placed in service. The shielding design of the lines was based primarily on the methods found in an AIEE Committee Report [B1]. The outage rate from lightning strokes subsequently proved to be much higher than expected and this set in motion a thorough investigation of the problem. The modern EGM emerged as a result of this research.

6.1.1 Whitehead's EGM

In 1960, J. G. Anderson developed a computer program for calculation of transmission line lightning performance that uses the Monte Carlo method [B6]. This method showed good correlation with actual line performance. An early version of the EGM was developed in 1963 by Young, Clayton, and Hileman [B151], but continuing research soon led to improved EGMs.

One extremely significant research project was performed by E. R. Whitehead [B146]. Whitehead's work included a theoretical model of a transmission system subject to direct strokes, development of analytical expressions pertaining to performance of the line, and supporting field data which verified the theoretical model and analyses. The final version of this model was published by Gilman and Whitehead in 1973 [B54].

Copyright © 2013 IEEE. All rights reserved.

Copyright The Institute of Electrical and Electronics Engineers, Inc.
Provided by IHS under license with IEEE
No reproduction or networking permitted without license from IHS

Order Number: 02120914
Sold to:EGAT [700166108393] - VARRIS.Y@EGAT.CO.TH,
Not for Resale,2016-09-15 03:57:48 UTC

6.1.2 Improvements in the EGM

Sargent made an important contribution with the Monte Carlo simulation of lightning performance [B132] and his work on lightning strokes to tall structures [B131]. Sargent showed that the frequency distribution of the amplitudes of strokes collected by a structure depends on the structure height as well as on its type (mast versus wire). Figure 22 shows the effect of the height of the structure, according to Sargent. In 1976, Mousa [B101] extended the application of the EGM (which was developed for transmission lines) to substation facilities.

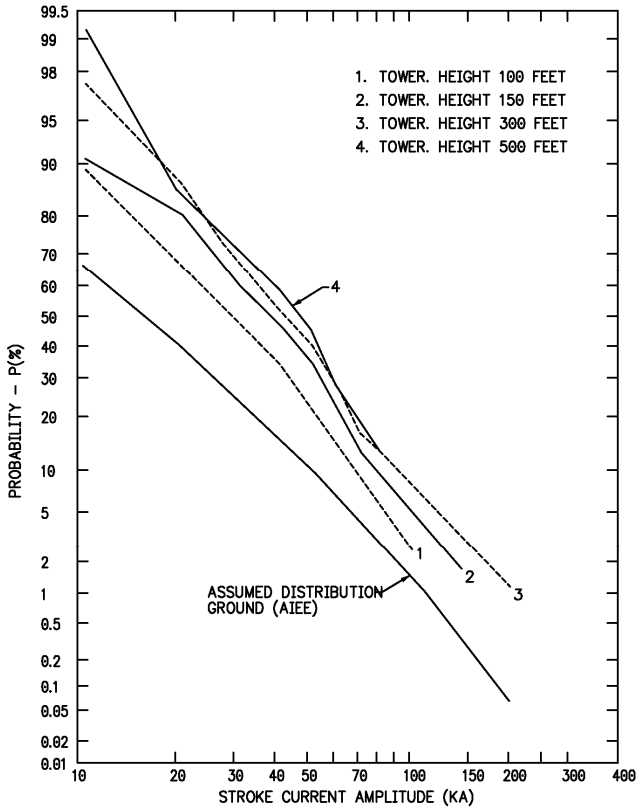

Figure 22—Effect of height of structure on frequency distribution of lightning current amplitudes according to Sargent [B131]

Work by Eriksson reported in 1978 [B50] and later work by Anderson and Eriksson reported in 1980 [B8] revealed a number of discrepancies in Whitehead's EGM. Mousa [B112] addressed some of the discrepancies in his "revised EGM," described in 6.2. One of the significant corrections was the use of empirical *k* factors to make allowance for the differing geometry of lines and masts. Eriksson's EGM, described in 6.5, uses a striking distance relation with a more physical basis to account for differences in geometry and height above ground. Research work continues today. Many investigators and engineers accept the EGM as a valid approach for designing lightning shielding systems.

This guide uses three methods of applying the EGM. One method of applying the EGM is Mousa's EGM version developed initially by Mousa and then updated by Mousa and Srivastava [B102], [B105], [B112], described in 6.2. Another method is the modified version of the rolling sphere method (Lee [B84] and [B85]) (Orrell [B115]) described in 6.3. Finally, a version developed by Eriksson [B46] is described in 6.5.

Copyright © 2013 IEEE. All rights reserved.

Copyright The Institute of Electrical and Electronics Engineers, Inc.
Provided by IHS under license with IEEE
No reproduction or networking permitted without license from IHS

Order Number: 02120914
Sold to:EGAT [700166108393] - VARRIS.Y@EGAT.CO.TH,
Not for Resale,2016-09-15 03:57:48 UTC

6.2 Mousa's EGM

Mousa's EGM differs from Whitehead's model in the following respects:

a) The stroke is assumed to arrive in a vertical direction. (It has been found that Whitehead's assumption of the stroke arriving at random angles is an unnecessary complication [B112] .)

b) The differing striking distances to masts, wires, and the ground plane are taken into consideration.

c) A value of 24 kA is used as the median stroke current (Mousa and Srivastava [B109]). This selection is based on the frequency distribution of the first negative stroke to flat ground. This value best reconciles the EGM with field observations.

d) The model is not tied to a specific form of the striking distance equations of 3.3. Continued research is likely to result in further modification of these equations as it has in the past. The best available estimate of this parameter *S,* striking distance, can be used.

6.2.1 Description of Mousa's EGM

In Clause 3 of this guide the process of stroke formation was discussed. The concept that the final striking distance is related to the magnitude of the stroke current was introduced and Equation (4) was selected as the best approximation of this relationship. A coefficient *k* accounts for the different striking distances to a mast, a shield wire, and to the ground. Equation (4) is repeated here with this modification:

$$S = 8kI_s^{0.65} \tag{17}$$

where

S is the striking distance in meters
I_s is the return stroke current in kiloamperes
k is a coefficient to account for different striking distances to a mast, a shield wire, or the ground plane

Mousa [B112] gives a value of $k = 1$ for strokes to wires or the ground plane, and a value of $k = 1.2$ for strokes to a lightning mast.

Lightning strokes have a wide distribution of current magnitudes, as shown in Figure 4. The EGM theory indicates that the protective area of a shield wire or mast depends on the amplitude of the stroke current. If a shield wire protects a conductor for a stroke current I_s, it might not shield the conductor for a stroke current less than I_s that has a shorter striking distance. Conversely, the same shielding arrangement may provide greater protection against stroke currents greater than I_s that have greater striking distances. This principle is discussed in more detail in 6.2.2, 6.4, and 6.5.

Since strokes less than some critical value I_s can penetrate the shield system and terminate on the protected conductor, the insulation system must be able to withstand the resulting voltages without flashover. Stated another way, the shield system is designed to intercept all strokes of magnitude I_s and greater so that flashover of the insulation will not occur.

Copyright © 2013 IEEE. All rights reserved.

Copyright The Institute of Electrical and Electronics Engineers, Inc.
Provided by IHS under license with IEEE
No reproduction or networking permitted without license from IHS

Order Number: 02120914
Sold to:EGAT [700166108393] - VARRIS.Y@EGAT.CO.TH,
Not for Resale,2016-09-15 03:57:48 UTC

6.2.2 Allowable stroke current

Some additional relationships need to be introduced before showing how the EGM is used to design a zone of protection for substation equipment. Bus insulators are usually selected to withstand a basic impulse level (BIL). Insulators can also be chosen according to other electrical characteristics including negative polarity impulse critical flashover (CFO) voltage. Flashover occurs if the voltage produced by the lightning stroke current flowing through the surge impedance of the station bus exceeds the withstand value. This can be expressed by the Gilman and Whitehead equation [B54]:

$$I_S = \frac{BIL \times 1.1}{(Z_S / 2)} = \frac{BIL \times 2.2}{Z_S} \tag{18}$$

or

$$I_S = \frac{0.94 \times CFO \times 1.1}{(Z_S / 2)} = \frac{2.068 \times CFO}{Z_S} \tag{19}$$

where

I_s is the allowable stroke current in kiloamperes
BIL is the basic impulse level in kilovolts
CFO is the negative polarity critical flashover voltage of the insulation being considered in kilovolts
Z_s is the surge impedance of the conductor through which the surge is passing in ohms
1.1 is the factor to account for the reduction of stroke current terminating on a conductor as compared to zero impedance earth [B54]

A method of computing the surge impedance under corona is given in Annex C. In Equation (19), the CFO has been reduced by 6% to produce a withstand level roughly equivalent to the BIL rating for post insulators.

If any of the first or subsequent peak stroke currents which are not intercepted by the shielding exceeds I_S, a flashover will occur. Since the median negative subsequent stroke current is 12 kA, and there are typically two subsequent strokes for every flash, the probability that at least one of the subsequent strokes causes a bus flashover is nearly unity.

Surge arresters on station equipment may provide a limited degree of protection from direct subsequent strokes that follow the same path as a weak first-stroke shielding failure. The calculation of the arrester protective efficiency makes use of the insulator volt-time curve (6.2.3), the recommended subsequent stroke parameters (50 kA with 200 kA/microsecond rate of current rise) from IEC 62305-1 [B66] and the limit distance calculation in IEEE Std 1313 [B72].

6.2.2.1 Adjustment for end of bus situation

Equation (18) and Equation (19) address the typical situation in which a direct lightning stroke to a conductor would have at least two directions to flow. The equations assume the surge impedances are the same in both directions, and therefore the total surge impedance is the parallel combination of the two, or 1/2 Z_s. Occasionally a designer might be concerned with a situation in which the entire direct stroke current produces a surge voltage across the equipment. An example would be a direct stroke to the end of a radial bus. The surge can only flow in one direction, and the surge voltage impressed across the insulators of the

Copyright © 2013 IEEE. All rights reserved.
Copyright The Institute of Electrical and Electronics Engineers, Inc.
Provided by IHS under license with IEEE
No reproduction or networking permitted without license from IHS
Order Number: 02120914
Sold to:EGAT [700166108393] - VARRIS.Y@EGAT.CO.TH,
Not for Resale,2016-09-15 03:57:48 UTC

bus would be the product of the total direct stroke current multiplied by the bus surge impedance. For such situations, the allowable stroke current I_s can be determined by dividing the results of calculations using Equation (18) and Equation (19) by 2.

6.2.2.2 Adjustment for transformer, open switch, or open breaker

Another situation where a designer might have concern is at open points in the conductor (such as open switches and open breakers), or points along the conductor where the surge impedance changes to a large value such as at transformer windings. At such locations, the voltage wave will reverse its direction of flow and return along the conductor. The voltage stress at these points will be up to two times the incoming value. This is referred to as the *voltage doubling effect*. If the design has incorporated surge arresters at the point of high surge impedance change, such as at the bushings of transformers, the concern for voltage doubling is reduced. The arresters operate and maintain the voltage at the discharge voltage level of the arresters. However, if arresters have not been applied at such points, the designer might determine the allowable stroke currents for these locations considering voltage doubling. The allowable stroke current I_s can again be determined by dividing the results of calculations using Equation (18) and Equation (19) by 2.

The designer is reminded that reduced BIL equipment is not protected by a design based on stroke current I_s. Such equipment should be protected by surge arresters in accordance with the latest revision of IEEE Std C62.22™ [B75].

6.2.3 Withstand voltage of insulator strings

BIL values of station post insulators can be found in vendor catalogs. A method is given below for calculating the withstand voltage of insulator strings. Figure 23 gives the critical flashover voltage of insulator strings. The data of Figure 23 were compiled by Darveniza, Popolansky, and Whitehead, [B44] based on the experimental work of Paris, et al. [B118] and Fujitaka, et al. [B52], and were adopted by Anderson [B7]. The withstand voltage in kV at 2 μs and 6 μs can be obtained from Figure 23 or calculated as follows:

$$V_{I2} = 0.94 \times 820\ w \tag{20}$$

$$V_{I6} = 0.94 \times 585\ w \tag{21}$$

where

- w is the length of insulator string (or air gap) in meters
- 0.94 is the ratio of withstand voltage to CFO voltage
- V_{I2} is the withstand voltage in kilovolts at 2 μs
- V_{I6} is the withstand voltage in kilovolts at 6 μs

Equation (21) is suggested for use with the EGM. The volt-time curves for cap-and-pin apparatus insulators tend to follow Equations (20) and (21), which are special cases of the general relation $V = 0.94 \times (400 + 710\ t^{-0.75})\ w$ in Figure 23 where t is in microseconds, w is in meters, and V is in kV. Figure 23 was produced using test procedures in IEEE Std 4™ [B68].

Note that Figure 23 is based on the application of pure lightning impulses. However, it can also be applied to the case where the stress on the insulators includes a power frequency component (ac or dc) as follows: A combined voltage surge stress consisting of an ac component equal to a (kV) and a lightning surge component equal to b (kV) can be considered equivalent to a pure lightning surge having an amplitude

Copyright © 2013 IEEE. All rights reserved.
Copyright The Institute of Electrical and Electronics Engineers, Inc.
Provided by IHS under license with IEEE
No reproduction or networking permitted without license from IHS
Order Number: 02120914
Sold to:EGAT [700166108393] - VARRIS.Y@EGAT.CO.TH,
Not for Resale,2016-09-15 03:57:48 UTC

equal to *(a + b)*. This is the approach used by Anderson [B7] and by Clayton and Young [B36]. The paper by Hepworth, Klewe, Lobley, and Tozer [B63] and its discussion by Feser support the above approach, while an IEEE Working Group [B79] suggests that a dc bias can have a conditioning effect that would increase the switching surge strength of the gap under the combined stress beyond the value for a pure switching surge. In any case, the values of Figure 23 should be considered as the most likely flashover voltage of a statistical phenomenon with substation spread.

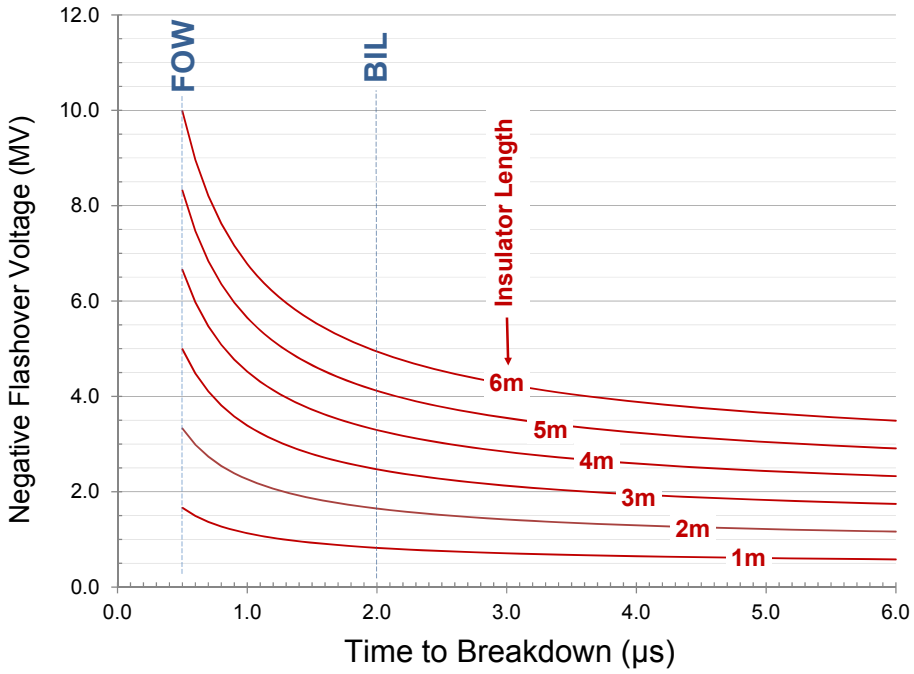

Figure 23—Volt-time curves for insulator strings

6.3 Application of the EGM by the rolling sphere method

The previous subclauses of Clause 6 introduced the concept of the EGM and gave the tools necessary to calculate the unknown parameters. The concept will now be further developed and applied to substation situations.

It was previously stated that shielding is needed for the equipment from all lightning strokes greater than I_s that would result in a flashover of the buswork. The design allows strokes less than I_s to enter the protected zone since the equipment can withstand voltages below its BIL design level.

This will be illustrated by considering three levels of stroke current: I_{s1}, stroke currents greater than I_{s1}, and stroke current less than I_{s1}. First, let us consider the stroke current I_{s1}.

6.3.1 Protection against stroke current I_{s1}

Stroke current I_{s1} is calculated from Equation (18) or Equation (19) as the current producing a voltage the insulation will just withstand. Substituting this result in Equation (17) gives the striking distance S for this stroke current.

Copyright © 2013 IEEE. All rights reserved.

Copyright The Institute of Electrical and Electronics Engineers, Inc.
Provided by IHS under license with IEEE
No reproduction or networking permitted without license from IHS

Order Number: 02120914
Sold to:EGAT [700166108393] - VARRIS.Y@EGAT.CO.TH,
Not for Resale,2016-09-15 03:57:48 UTC

In 1977, Ralph H. Lee developed a simplified technique for applying the electrogeometric theory to the shielding of buildings and industrial plants [B84], [B85], [B86]. J. T. Orrell extended the technique to specifically cover the protection of electric substations [B115]. The technique developed by Lee has come to be known as the *rolling sphere method*. For the following illustration, the rolling sphere method will be used. This method employs the simplifying assumption that the striking distances to the ground, a mast, or a wire are the same. With this exception, the rolling sphere method has been updated in accordance with Mousa's EGM described in Equation (17).

Use of the rolling sphere method involves rolling an imaginary sphere of radius S over the surface of a substation. The sphere rolls up and over (and is supported by) lightning masts, shield wires, substation fences, and other grounded metallic objects that can provide lightning shielding. A piece of equipment is said to be protected from a direct stroke if it remains below the curved surface of the sphere by virtue of the sphere being elevated by shield wires or other devices. Equipment that touches the sphere or penetrates its surface is not protected. The basic concept is illustrated in Figure 24.

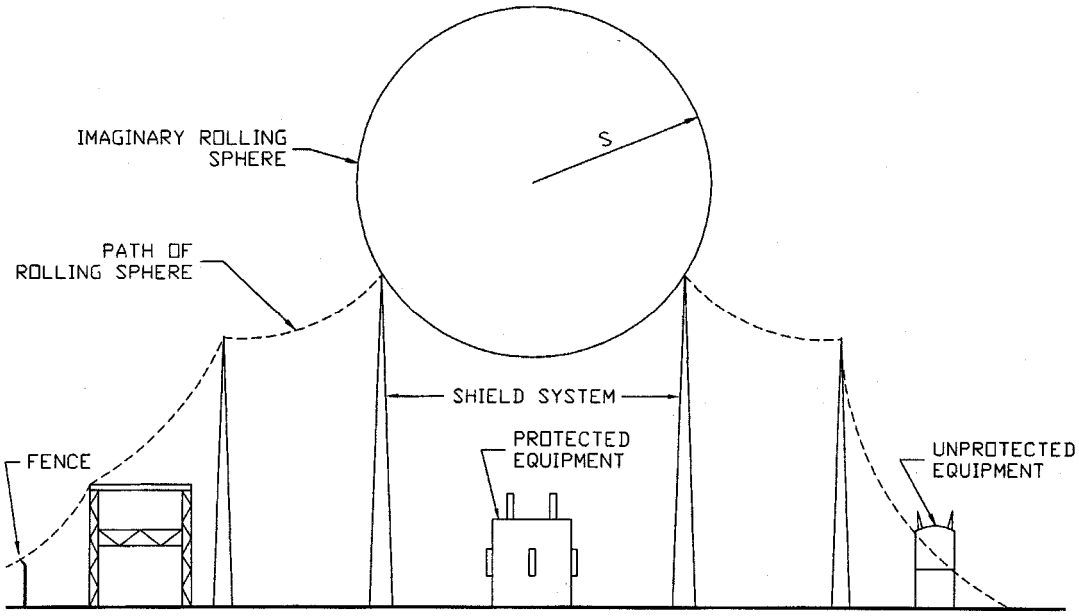

Figure 24—Principle of rolling sphere with multiple shielding electrodes

Continuing the discussion of protection against stroke current I_{s1}, consider first a single mast. The geometrical model of a single substation shield mast, the ground plane, the striking distance, and the zone of protection are shown in Figure 25. An arc of radius S_{R1} that touches the shield mast and the ground plane is shown in Figure 25. In this model, all points below this arc are expected to be protected against the stroke current I_{s1}. This is the protected zone.

Copyright © 2013 IEEE. All rights reserved.
Copyright The Institute of Electrical and Electronics Engineers, Inc.
Provided by IHS under license with IEEE
No reproduction or networking permitted without license from IHS
Order Number: 02120914
Sold to:EGAT [700166108393] - VARRIS.Y@EGAT.CO.TH,
Not for Resale,2016-09-15 03:57:48 UTC

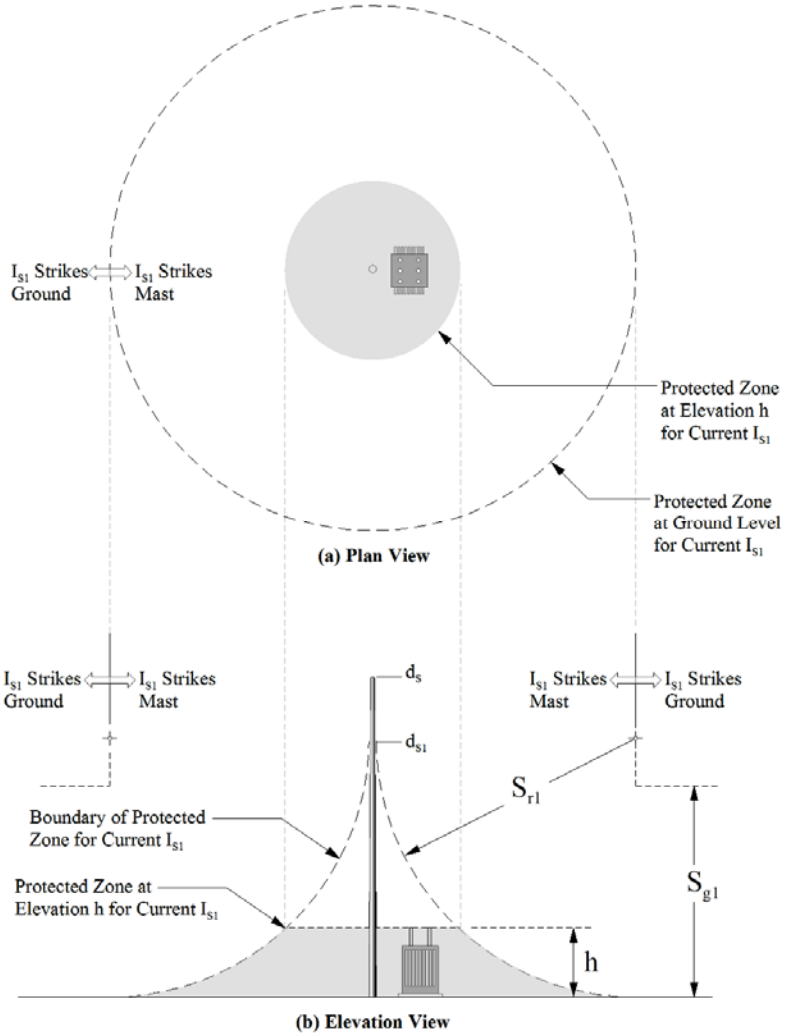

Figure 25—Shield mast protection for stroke current I_{s1}

The arc is constructed as follows in Figure 25. A dashed line is drawn parallel to the ground at a distance S_{g1} (the striking distance) as obtained from Equation (17) above the ground plane. A dashed line is drawn vertically in parallel with the mast at a distance S_{r1} (the striking distance as obtained from Equation (17)). An arc of radius S_{r1}, with its center located on the vertical dashed line, is drawn so the radius of the arc just touches the mast. Stepped leaders that result in stroke current I_{s1} and that descend outside of the vertical dashed line will strike the ground. Stepped leaders that result in stroke current I_{s1} and that descend inside the vertical dashed line will strike the shield mast, provided all other objects are within the protected zone. The height of the shield d_{s1} mast that will provide the minimum zone of protection for stroke currents equal to I_{s1} is S_{r1}. If the mast height is less than S_{r1}, the zone of protection will be reduced. *The EGM suggests that any "excessive height" of the mast above the striking distance adds no additional protection. This is not necessarily true in the case of multiple masts and shield wires.*

The protection zone can be visualized as the surface of a sphere with radius S_{r1} that is rolled toward the mast until touching the mast. As the sphere is rolled around the mast, a three-dimensional surface of protection is defined. It is this concept that has led to the name rolling sphere for simplified applications of the EGM.

Copyright © 2013 IEEE. All rights reserved.

Copyright The Institute of Electrical and Electronics Engineers, Inc.
Provided by IHS under license with IEEE
No reproduction or networking permitted without license from IHS

Order Number: 02120914
Sold to:EGAT [700166108393] - VARRIS.Y@EGAT.CO.TH,
Not for Resale,2016-09-15 03:57:48 UTC

6.3.2 Protection against first negative return strokes greater than I_{s1}

6.3.1 demonstrated the protection provided for a stroke current I_{s1}. However, a lightning stroke current has an infinite number of possible magnitudes and the substation designer will want to know if the system provides protection at other levels of stroke current magnitude.

Consider a stroke current I_{s2} with magnitude greater than I_{s1}. Striking distance, determined from Equation (17) is S_2. The geometrical model for this condition is shown in Figure 26. Arcs of protection for stroke current I_{s2}, and for the previously discussed I_{s1}, are both shown. The figure shows that the zone of protection provided by the mast for stroke current I_{s2} is greater than the zone of protection provided by the mast for stroke current I_{s1}.

In this model, stepped leaders that result in stroke current I_{s2} and that descend outside of the point where the arc is tangent to the ground will likely strike the ground. Stepped leaders that result in stroke current I_{s2} and that descend inside the point where the arc is tangent to the ground will strike the shield mast, provided all other objects are within the S_2 protected zone. Again, the protective zone can be visualized as the surface of a sphere touching the mast. In this case, the sphere has a radius S_2.

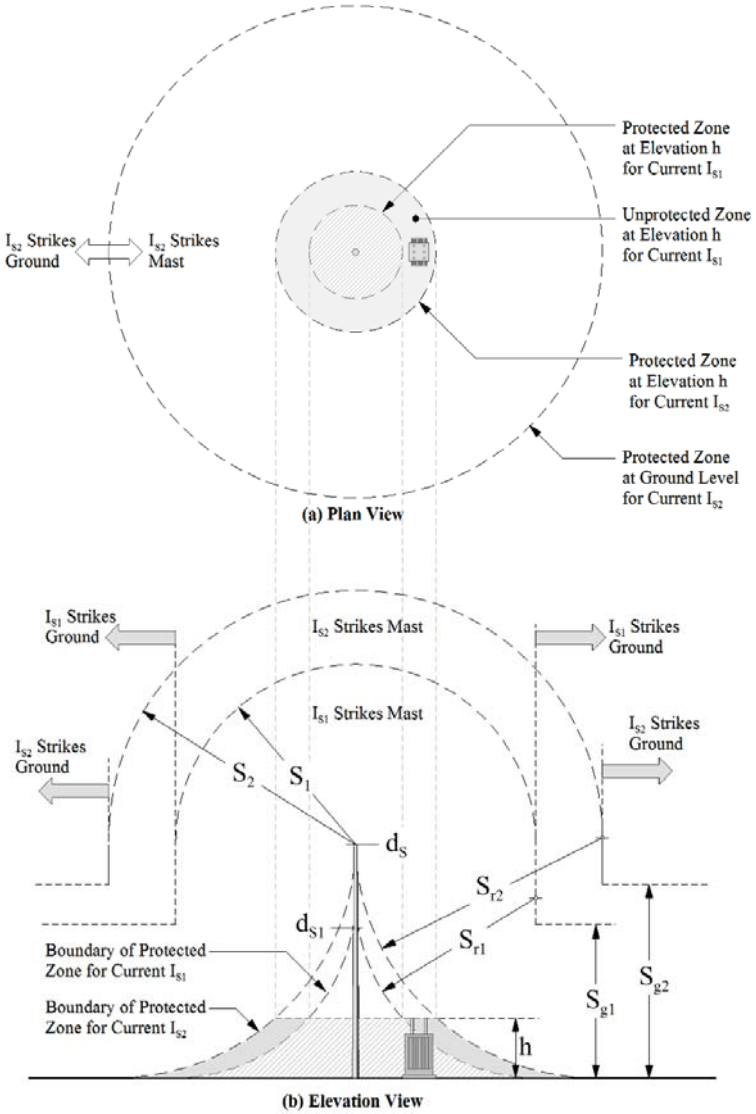

Figure 26—Shield mast protection for stroke current I_{s2}

Copyright © 2013 IEEE. All rights reserved.

Copyright The Institute of Electrical and Electronics Engineers, Inc.
Provided by IHS under license with IEEE
No reproduction or networking permitted without license from IHS

Order Number: 02120914
Sold to:EGAT [700166108393] - VARRIS.Y@EGAT.CO.TH,
Not for Resale,2016-09-15 03:57:48 UTC

6.3.3 Protection against first negative return strokes less than I_{s1}

It has been shown that a shielding system that provides protection at the stroke current level I_{s1} provides even better protection for larger stroke currents. The remaining scenario to examine is the protection afforded when stroke currents are less than I_{s1}.

Consider a stroke current I_{s0}, with magnitude less than I_{s1}. The striking distance, determined from Equation (17), is S_o. The geometrical model for this condition is shown in Figure 27. Arcs of protection for stroke current I_{s0} and I_{s1} are both shown. The figure shows that the zone of protection provided by the mast for stroke current I_{s0} is less than the zone of protection provided by the mast for stroke current I_{s1}. It is noted that a portion of the equipment protrudes above the dashed arc or zone of protection for stroke current I_{s0}. In this model stepped leaders that result in stroke current I_{s0} and that descend outside of the point where the arc is tangent to the ground will likely strike the ground. However, some stepped leaders that result in stroke current I_{s0} and that descend inside the point where the arc is tangent to the ground could strike the equipment. This is best shown by observing the plan view of protective zones shown in Figure 27. In this model, stepped leaders for stroke current I_{s0} that descend inside the inner protective zone will likely strike the mast and protect equipment that is h in height. Stepped leaders for stroke current I_{s0} that descend in the shaded unprotected zone will likely strike equipment of height h in the area. If, however, the value of I_{s1} was selected based on the withstand insulation level of equipment used in the substation, the likelihood of stroke current I_{s0} causing damage to equipment is low.

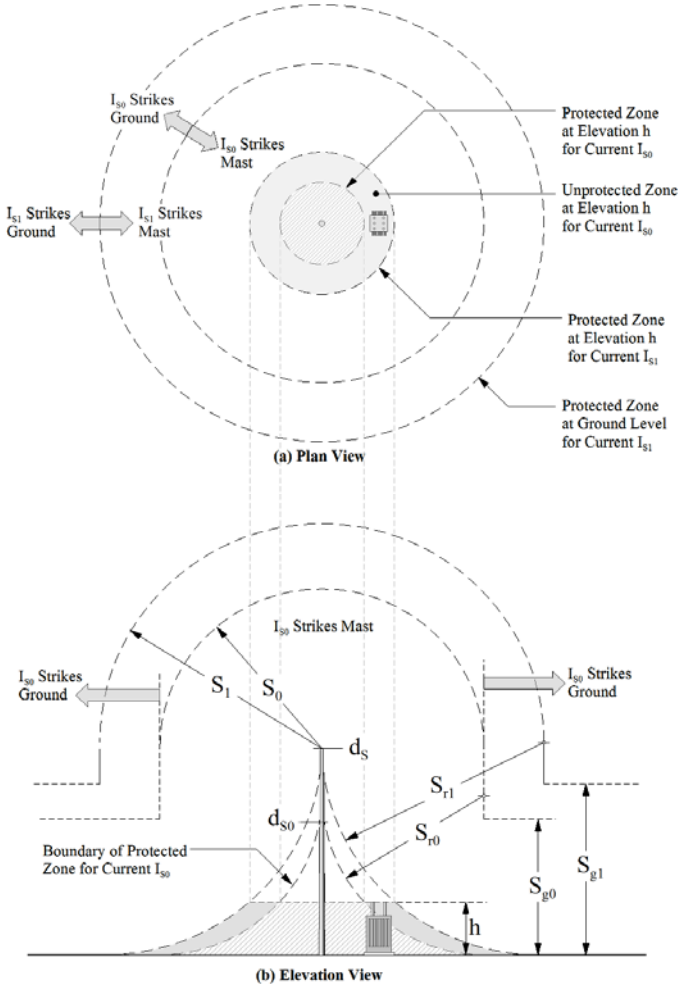

Figure 27—Shield mast protection for stroke current I_{s0}

Copyright © 2013 IEEE. All rights reserved.

Copyright The Institute of Electrical and Electronics Engineers, Inc.
Provided by IHS under license with IEEE
No reproduction or networking permitted without license from IHS

Order Number: 02120914
Sold to:EGAT [700166108393] - VARRIS.Y@EGAT.CO.TH,
Not for Resale,2016-09-15 03:57:48 UTC

6.3.4 Multiple shielding electrodes

The electrogeometric modeling concept of direct stroke protection has been demonstrated for a single shield mast. A typical substation is much more complex. It can contain several voltage levels and might utilize a combination of shield wires and lightning masts in a three-dimensional arrangement.

The above concepts can be applied to multiple shielding masts, horizontal shield wires, or a combination of the two. Figure 28 shows this application considering four shield masts in a multiple shield mast arrangement. The arc of protection for stroke current I_s is shown for each set of masts. The dashed arcs represent those points at which a descending stepped leader for stroke current I_s will be attracted to one of the four masts. The protected zone between the masts is defined by an arc of radius S with the center at the intersection of the two dashed arcs. The protective zone can again be visualized as the surface of a sphere with radius S, which is rolled toward a mast until touching the mast, then rolled up and over the mast such that it would be supported by the masts. The dashed lines would be the locus of the center of the sphere as it is rolled across the substation surface. Using the rolling sphere concept and the proper radius, the protected area of an entire substation can be determined. This can be applied to any group of different height shield masts, shield wires, or a combination of the two. Figure 29 shows an application to a combination of masts and shield wires.

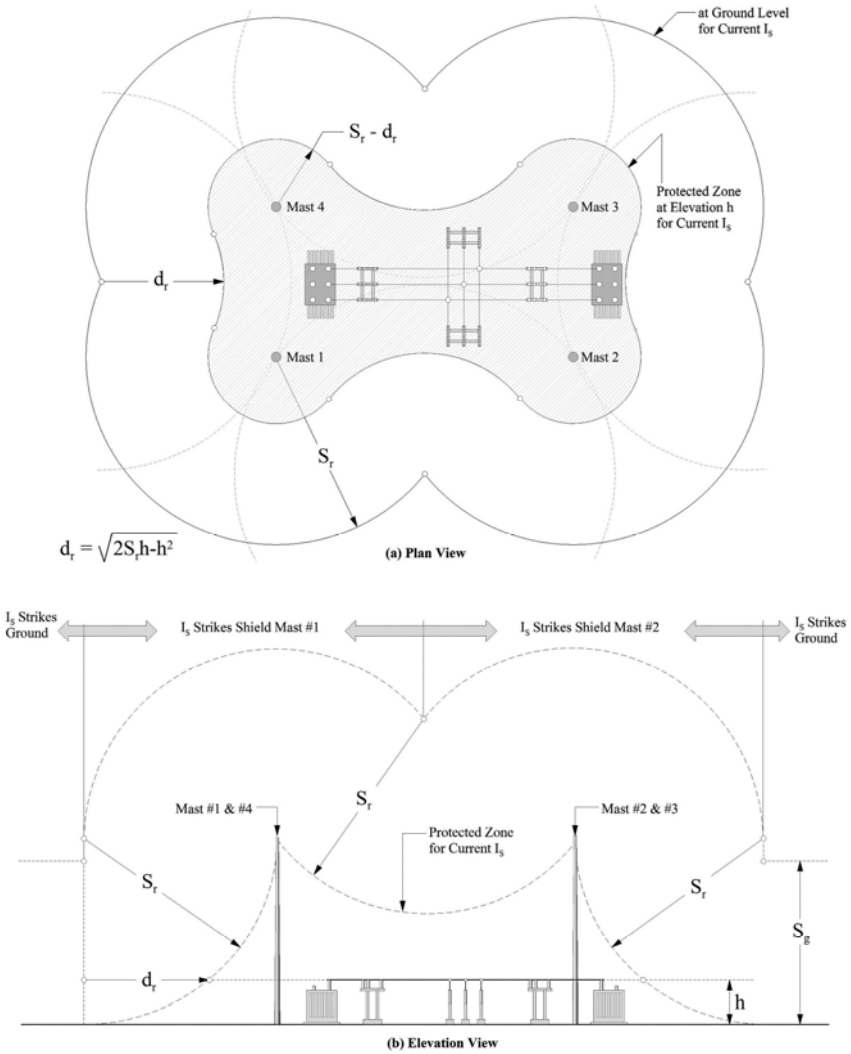

Figure 28—Multiple shield mast protection for stroke current I_s

Copyright © 2013 IEEE. All rights reserved.

Copyright The Institute of Electrical and Electronics Engineers, Inc.
Provided by IHS under license with IEEE
No reproduction or networking permitted without license from IHS

Order Number: 02120914
Sold to:EGAT [700166108393] - VARRIS.Y@EGAT.CO.TH,
Not for Resale,2016-09-15 03:57:48 UTC

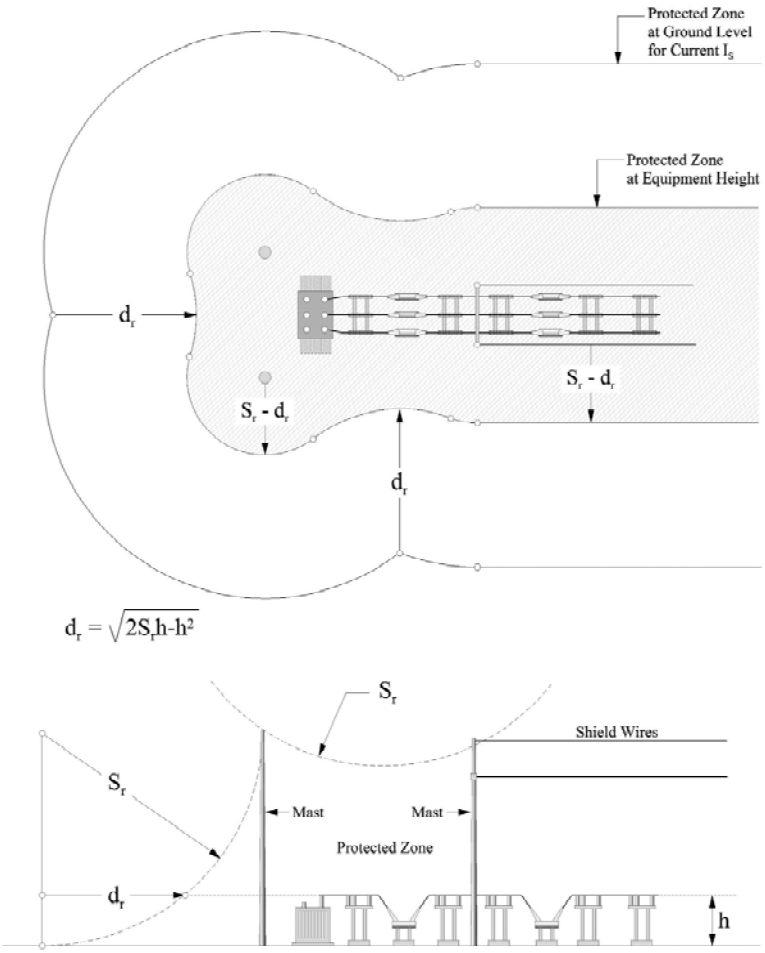

Figure 29—Protection by shield wires and masts

6.3.5 Changes in voltage level

Protection has been illustrated with the assumption of a single voltage level. Substations, however, might have two or more voltage levels. The rolling sphere method is applied in the same manner in such cases, except that the sphere radius would increase or decrease appropriate to the change in voltage at a transformer. (Example calculations for a substation with two voltage levels are given in Annex B.)

6.3.6 Minimum stroke current

The designer will find that shield spacing becomes quite close at voltages of 69 kV and below. It might be appropriate to select some minimum stroke current, perhaps 2 kA for shielding stations below 115 kV. Such an approach is justified within IEC 62305-1 [B66]. An examination of Figure 4 and Figure 5 indicates that 99.5% of all strokes will exceed 3 kA, recommended for the highest class of lightning protective level (LPL). Therefore, this limit will result in reduced exposure while making the shielding system more economical.

Copyright © 2013 IEEE. All rights reserved.

Copyright The Institute of Electrical and Electronics Engineers, Inc.
Provided by IHS under license with IEEE
No reproduction or networking permitted without license from IHS

Order Number: 02120914
Sold to:EGAT [700166108393] - VARRIS.Y@EGAT.CO.TH,
Not for Resale,2016-09-15 03:57:48 UTC

6.4 Application of Mousa's EGM

The rolling sphere method has been used in the preceding subclauses to illustrate application of the EGM. Mousa describes the application of Mousa's EGM [B101]. Figure 30 depicts two shield wires, G1, and G2, providing shielding for three conductors, W1, W2, and W3. S_c is the critical striking distance as determined by Equation (17), but reduced by 10% to allow for the statistical distribution of strokes so as to preclude any failures. Arcs of radius S_c are drawn with centers at G1, G2, and W2 to determine if the shield wires are positioned to properly shield the conductors. The factor ψ is the horizontal separation of the outer conductor and shield wire, and b is the distance of the shield wires above the conductors. Figure 31 illustrates the shielding provided by four masts. The height h_{mid} at the center of the area is the point of minimum shielding height for the arrangement. For further details in the application of the method, see [B101].

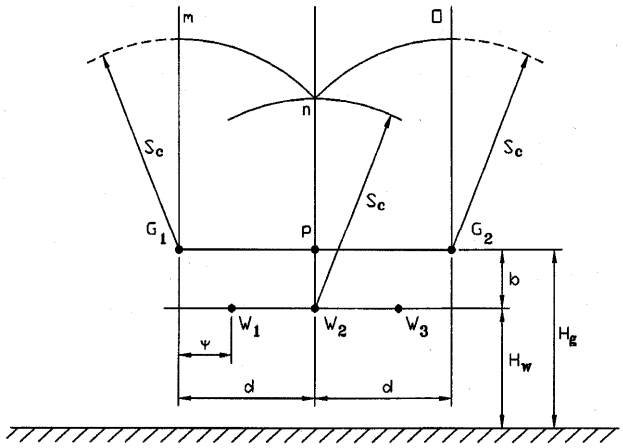

Figure 30—Shielding requirements regarding the strokes arriving between two shield wires (Mousa [B101])

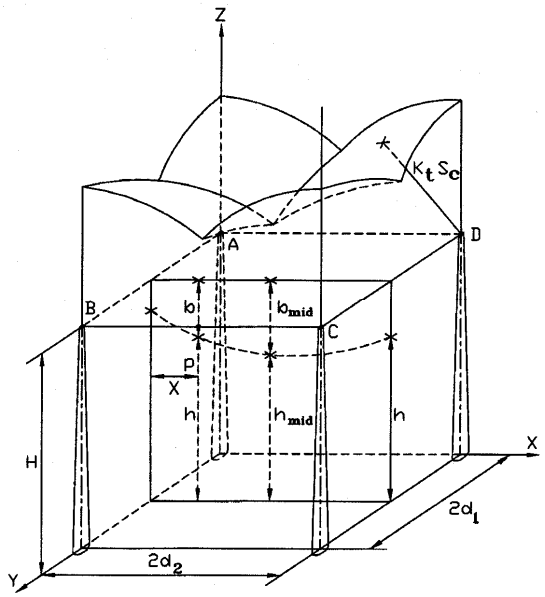

Figure 31—Shielding of an area bounded by four masts (Mousa [B101])

Copyright © 2013 IEEE. All rights reserved.

Copyright The Institute of Electrical and Electronics Engineers, Inc.
Provided by IHS under license with IEEE
No reproduction or networking permitted without license from IHS

Order Number: 02120914
Sold to:EGAT [700166108393] - VARRIS.Y@EGAT.CO.TH,
Not for Resale,2016-09-15 03:57:48 UTC

6.5 Eriksson's EGM

Since the striking distance quantifies the range of capture of a lightning strike, Equation (17) simplifies this in that it does not consider the varying field enhancement effects of structure height or geometry, the streamer-leader inception criteria and, thereafter, the leader propagation effects of naturally occurring lightning strikes. Eriksson, in 1987 [B46], proposed and based on field data, a striking distance model that also took into account the dependence on structure height, namely:

$$S = f(I_P, H) \tag{22}$$

where

I_P is the prospective peak stroke current

H is structure height

6.5.1 Development of the Eriksson EGM

Eriksson found that the attraction of lightning to a structure is not only determined by the striking distance but also the successful interception of the downward leader by the upward leader. The interception process was found to be dependent on the structure height, the relative positions of the two leaders and their relative velocities of approach. The Eriksson EGM is the model developed from this research carried out on the lightning attachment process.

Using this physical model, Eriksson defined the capture distance as the *attractive radius,* R_a. This concept is illustrated in Figure 32. Note that the magnitude of the attractive radius is, in general, less than the magnitude of the striking distance; therefore the attractive radius concept generally provides a more conservative result.

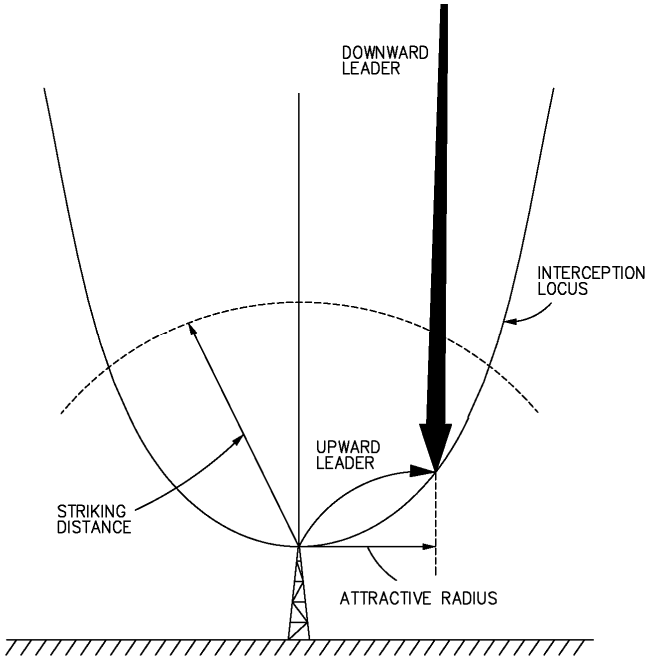

Figure 32—The Eriksson EGM [B46]

Copyright © 2013 IEEE. All rights reserved.

Copyright The Institute of Electrical and Electronics Engineers, Inc.
Provided by IHS under license with IEEE
No reproduction or networking permitted without license from IHS

Order Number: 02120914
Sold to:EGAT [700166108393] - VARRIS.Y@EGAT.CO.TH,
Not for Resale,2016-09-15 03:57:48 UTC

For vertical structures up to 60 m (~200 ft) in height, Eriksson defined the attractive radius as:

$$R_a = 0.84 H_m^{0.6} I_S^{0.74} \quad (23)$$

where

R_a is the attractive radius in meters
I_s is the return stroke current in kiloamperes from Equation (18)
H_m is the structure height in meters

For horizontal static wire conductors and lines up to 60 m (~200 ft) in height, the attractive radius is given by:

$$R_a = 0.67 H_{SW}^{0.6} I_S^{0.74} \quad (24)$$

where

R_a is the attractive radius in meters
I_s is the return stroke current in kiloamperes from Equation (18)
H_{SW} is the structure height in meters

Using the attractive radius, the *collection area* of the structure can be computed. This is useful for applying the concept of *competing features* of the shielding system versus the substation structures. It is well known that all structures within a substation are capable of initiating upward leaders and hence intercepting a lightning stroke. The "attractive radius" R_a should be computed for each part of the facility to be protected by the shielding system in addition to the protective air terminations, lines, and masts. As long as the collection areas of the protective elements encompass those of the elements to be protected, the facility is said to be protected at the pre-determined level. Equation (22), Equation (23), and Equation (24) are used for equipment and buswork planned to be protected by the shielding system. This concept is illustrated in Figure 33.

Copyright © 2013 IEEE. All rights reserved.

Copyright The Institute of Electrical and Electronics Engineers, Inc.
Provided by IHS under license with IEEE
No reproduction or networking permitted without license from IHS

Order Number: 02120914
Sold to:EGAT [700166108393] - VARRIS.Y@EGAT.CO.TH,
Not for Resale,2016-09-15 03:57:48 UTC

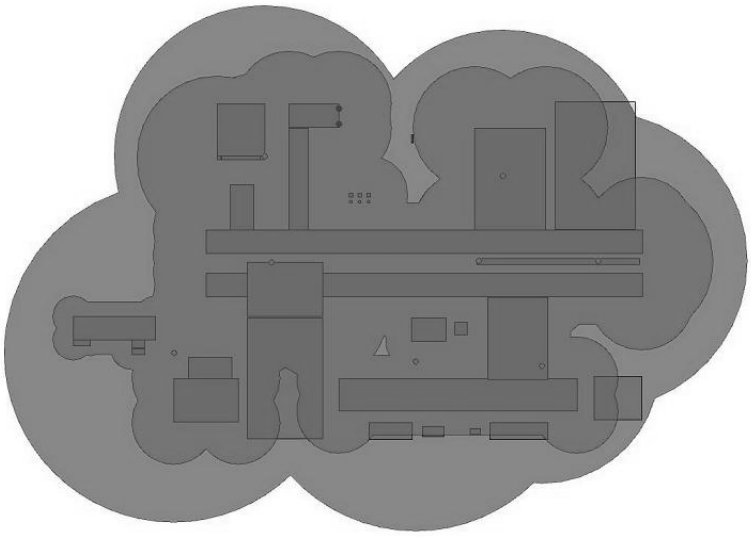

Figure 33—Example application of competing features and collection areas of elements to be protected (dark gray) and protective elements (light grey) to a substation using the Eriksson EGM

6.5.1.1 The physical criteria of the Eriksson EGM

Even though the Eriksson EGM was developed in the 1980s, research since that time has supported the fact that the striking distance is not only a function of the prospective stroke current but also the structure height.

The Eriksson EGM designs can be made based on the height of the masts and conductors used for the shielding of substations against lightning. Furthermore, traditional methods—such as Whitehead's and Mousa's EGMs—are based on a "final jump" scenario (strike point is determined, more or less, only by physical distance). On the other hand, the Eriksson EGM takes into account the well-known "leader propagation" characteristics of the lightning attachment process. These concepts are illustrated in Figure 34.

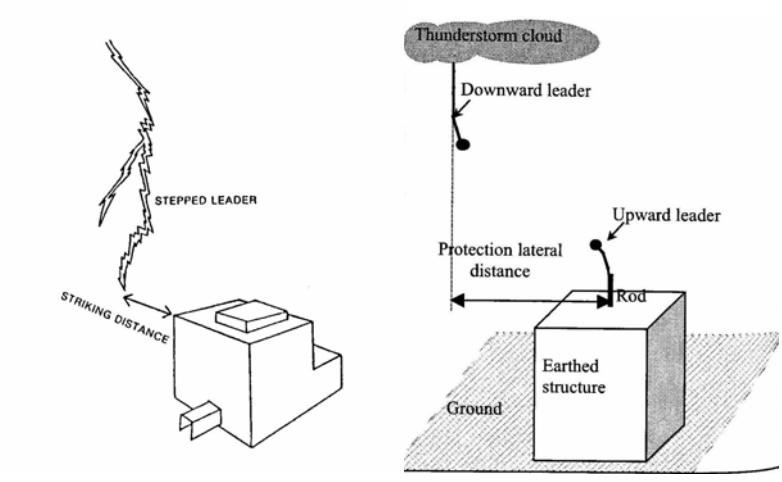

Figure 34—Illustration of the fundamental difference between the traditional methods, such as Whitehead's and Mousa's EGMs, and the Eriksson EGM

Copyright © 2013 IEEE. All rights reserved.
Copyright The Institute of Electrical and Electronics Engineers, Inc.
Provided by IHS under license with IEEE
No reproduction or networking permitted without license from IHS
Order Number: 02120914
Sold to:EGAT [700166108393] - VARRIS.Y@EGAT.CO.TH,
Not for Resale,2016-09-15 03:57:48 UTC

6.5.2 Application of Eriksson's EGM

Substation shielding systems are typically designed to shield equipment for all lightning stroke currents greater than the flashover BIL of the buswork. The assumption is that stroke currents less than the equipment insulation level that penetrates the shielding system will not cause damage to the equipment. An application of the Eriksson EGM will be illustrated by considering two levels of stroke current: I_S and stroke currents greater than I_S.

6.5.2.1 Protection against stroke current I_s

Effective shielding implies that all stroke currents greater than the allowable stroke current I_S will approach to within striking distance of the shield wire before attaining striking distance to the conductor being protected (Eriksson [B46]).

$I_{S,}$, allowable stroke current, is calculated from Equation (18) as the current producing a voltage the insulation will likely withstand to prevent flashover of the line insulation. Shield failure occurs for stroke currents above the critical current to I_m corresponding to a maximum penetration current as seen in Figure 35. Complete shielding is the point where I is set to I_S and the R_g intersect R_c on the horizontal plane of C, the conductor or equipment being protected.

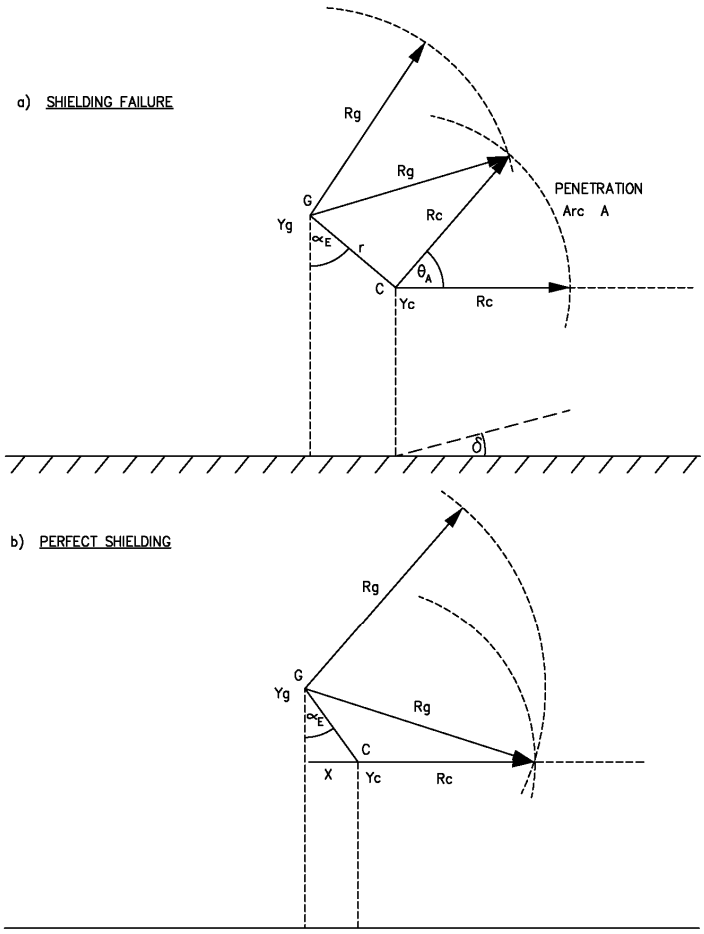

Figure 35—Illustration of Eriksson's EGM

Copyright © 2013 IEEE. All rights reserved.
Copyright The Institute of Electrical and Electronics Engineers, Inc.
Provided by IHS under license with IEEE
No reproduction or networking permitted without license from IHS
Order Number: 02120914
Sold to:EGAT [700166108393] - VARRIS.Y@EGAT.CO.TH,
Not for Resale,2016-09-15 03:57:48 UTC

6.5.2.2 Placement of shielding structures for stroke current I_S

As discussed in Clause 6, lightning strokes are assumed vertical in a substation that generally meets one of the following criteria:

- Is located in valleys
- Is surrounded by tall buildings or trees
- Is a loop system
- Serves general loads
- Is a small site areas for one or two transformers

The designer might need to adjust the shielding design for a side lightning stroke that is horizontal to the buswork and equipment when one of the following criteria are met:

- Is located on the top of a hill
- Is in a large, open plain
- Is a part of a radial system
- Serves a critical load
- Covers a large site area
- Serves a power plant

When designing a lightning protection system, consideration must be given to providing coverage for future low BIL equipment and accessibility for possible replacement due to equipment failures. To aid in shielding equipment placement, marking off all areas where shielding systems cannot be placed can be helpful. Figure 36 illustrates the typical shielding structure placements for substation applications.

Copyright © 2013 IEEE. All rights reserved.

Copyright The Institute of Electrical and Electronics Engineers, Inc.
Provided by IHS under license with IEEE
No reproduction or networking permitted without license from IHS

Order Number: 02120914
Sold to:EGAT [700166108393] - VARRIS.Y@EGAT.CO.TH,
Not for Resale,2016-09-15 03:57:48 UTC

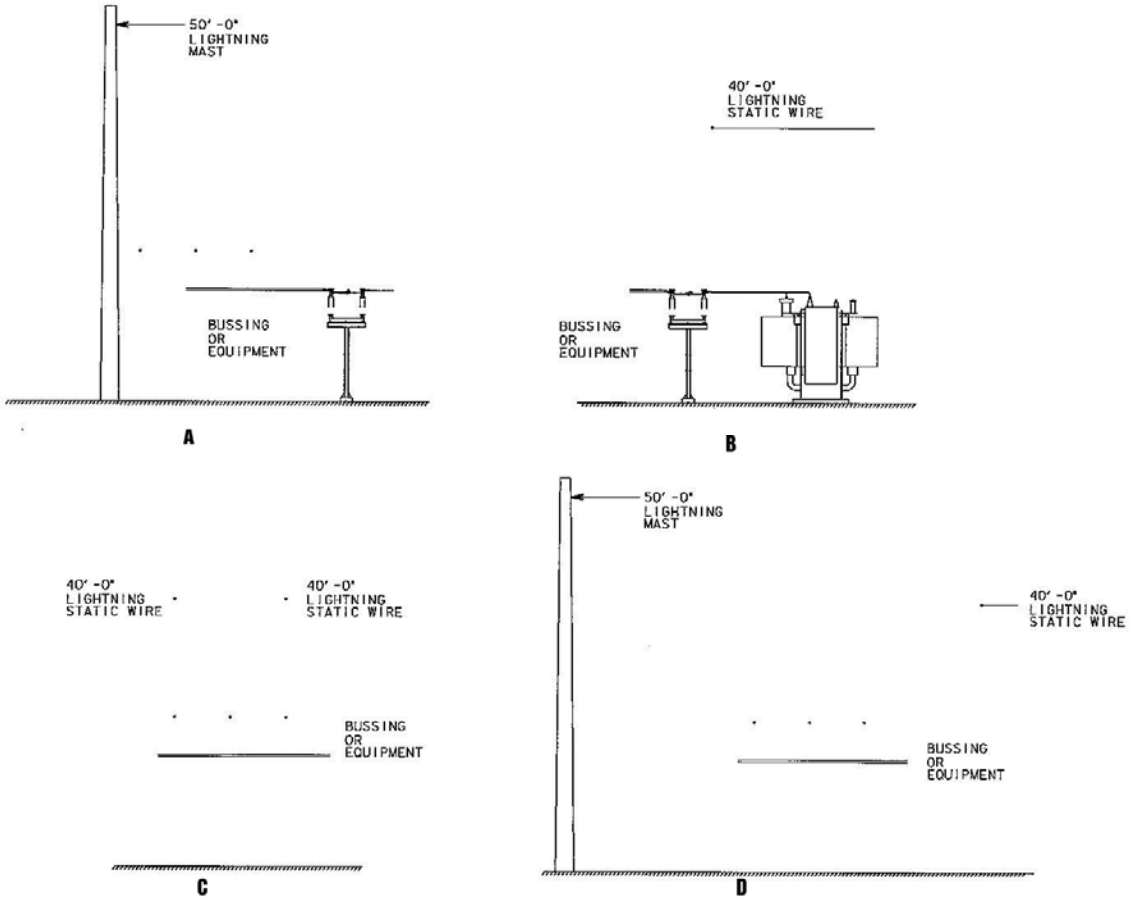

Figure 36—Illustration of the Eriksson EGM shielding placements: (a) shielding by a single mast; (b) shielding by a static wire over equipment; (c) shielding by static wires along equipment; (d) shielding by combination of masts and static wires.

When side lightning stroke protection is required, the concept of Figure 35 can be applied to Figure 36. Equation (25) shows how to calculate the critical angle. To provide better lightning protection, use an angle of 45 degrees or less when side lightning stroke protection is required. Typical critical angles αc for substations are from 30 degrees to 60 degrees. The radii of attraction need R_g to be greater than the difference of the shielding height and the conductor height being protected. Equation (26) gives the suggested maximum horizontal distance a shielding structure can be placed from the equipment being protected where R_g is given by Equation (23) and Equation (24) respectively.

$$\alpha c = \tan^{-1} \frac{X}{Y_g - Y_c} \tag{25}$$

where

αc is the critical angle in degrees
X is the horizontal distance between the grounding system and conductor in meters
Y_g is the vertical height to the shielding system in meters
Y_c is the vertical height to the conductor in meters

Copyright © 2013 IEEE. All rights reserved.

Copyright The Institute of Electrical and Electronics Engineers, Inc.
Provided by IHS under license with IEEE
No reproduction or networking permitted without license from IHS

Order Number: 02120914
Sold to:EGAT [700166108393] - VARRIS.Y@EGAT.CO.TH,
Not for Resale,2016-09-15 03:57:48 UTC

$$X = \sqrt{R_g^2 - (Y_g - Y_c - R_c)^2} \tag{26}$$

where

X is the maximum horizontal distance the shield can be placed from the conductor being protected
R_g is length of the radii of attraction arc for the shielding structure
R_c is length of the radii of attraction arc for the electrical component being protected
Y_g is vertical height of the shielding device
Y_c is the vertical height to the electrical component being protected

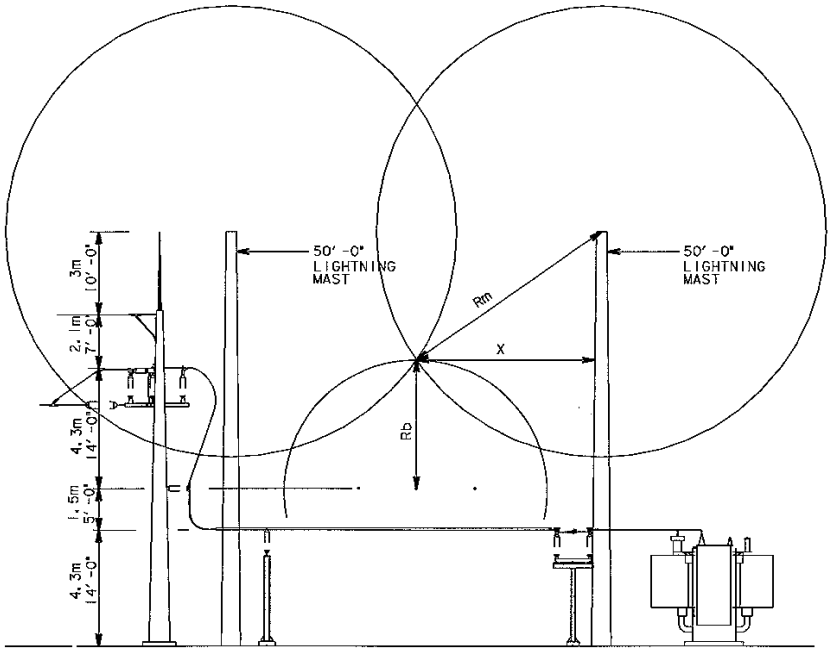

Figure 37—Illustration of the Eriksson EGM shielding placements proving domed canopy protection with shielding masts

The height of the static wire for Equation (25) might need to be reduced for snow, ice, wind swing, or sag from the designed attachment height. This reduced static wire height will reduce the R_g value as utilized in Equation (26) above. Reduce the horizontal protective distance X by this value for the design. After the poles are placed, measure the static wire spans to check the sag effects. For substations, lightning is assumed vertical. Most shielding designs will produce a domed protection canopy over the substation as seen in Figure 37. See the examples in Annex B for critical side lightning protection.

6.5.2.3 Protection against stroke current greater than I_s

Figure 32 shows the geometry for the Eriksson EGM and shielding analysis (Eriksson [B46]). Depending on the allowable stroke current I_s, the shielding protection would allow lightning strikes to penetrate the system for all values of I from the maximum design current I_m down to I_c where I_S is the critical stroke current from Equation (18). The protected equipment will likely withstand all stroke currents less than I_S. The designer should begin with the stroke current I set equal to I_S from Equation (18). The designer will need to determine the allowable probability of the shielding system failure.

Copyright © 2013 IEEE. All rights reserved.

Copyright The Institute of Electrical and Electronics Engineers, Inc.
Provided by IHS under license with IEEE
No reproduction or networking permitted without license from IHS

Order Number: 02120914
Sold to:EGAT [700166108393] - VARRIS.Y@EGAT.CO.TH,
Not for Resale,2016-09-15 03:57:48 UTC

Protection levels are determined from a standard cumulative frequency distribution of lightning stroke currents, such as the one shown in Figure 4. In 6.2, insulator BILs can be equated to the minimum stroke currents that will be intercepted. Table 2 presents the relevant information.

As an example, for an insulator BIL of 750 kV, Table 2 implies that 97% of all lightning flashes have a peak stroke current exceeding 5.5 kA and will be intercepted within R_a for a mast height of 50.9 meters. The remaining 3% of low-energy strikes can bypass the lightning protection system. This is part of the risk management process that is implemented when designing any lightning protection system.

Table 2—Examples of protection level correspondence to BILs for masts of height 50.9 m

BIL (kV)	I_s (kA)	Protection level	R_a (m)	R_a (ft)
110	0.81		7.6	25.1
150	1.10		9.5	30.7
200	1.47		11.3	37.0
250	1.83		13.1	42.8
350	2.57		16.2	53.3
395	2.90	99%	17.7	57.7
550	4.03		21.6	71.5
650	4.77		24.4	79.7
750	5.50	97%	26.5	87.5
818	6.00		28.3	92.5
900	6.60		29.9	98.5
1050	7.70		33.2	109
1300	9.53		38.1	125
1364	10.00	91%	39.7	129

6.5.3 Protection comparison for EGM against stroke current I_s

Figure 38 and Figure 39 show a comparison of Equation (1), Equation (17), Equation (23), and Equation (24). For the Eriksson EGM, the R_a from Equation (23) and Equation (24) typically converges for shielding heights from 20 to 45 meters (65.6 to 147.6 ft) and for I_S from 4 kA to 30 kA. As discussed in 6.2.2 and 6.3.6, for substation designs below 69 kV, I_S can be 2 kA. The Eriksson EGM is more conservative below 20 m (65.6 ft) and less conservative above 45 m (147.6 ft) for I_S from 2 kA to 30 kA than Mousa's EGM of Equation (17) as is seen by Figure 38 and Figure 39.

Copyright © 2013 IEEE. All rights reserved.

Copyright The Institute of Electrical and Electronics Engineers, Inc.
Provided by IHS under license with IEEE
No reproduction or networking permitted without license from IHS

Order Number: 02120914
Sold to:EGAT [700166108393] - VARRIS.Y@EGAT.CO.TH,
Not for Resale,2016-09-15 03:57:48 UTC

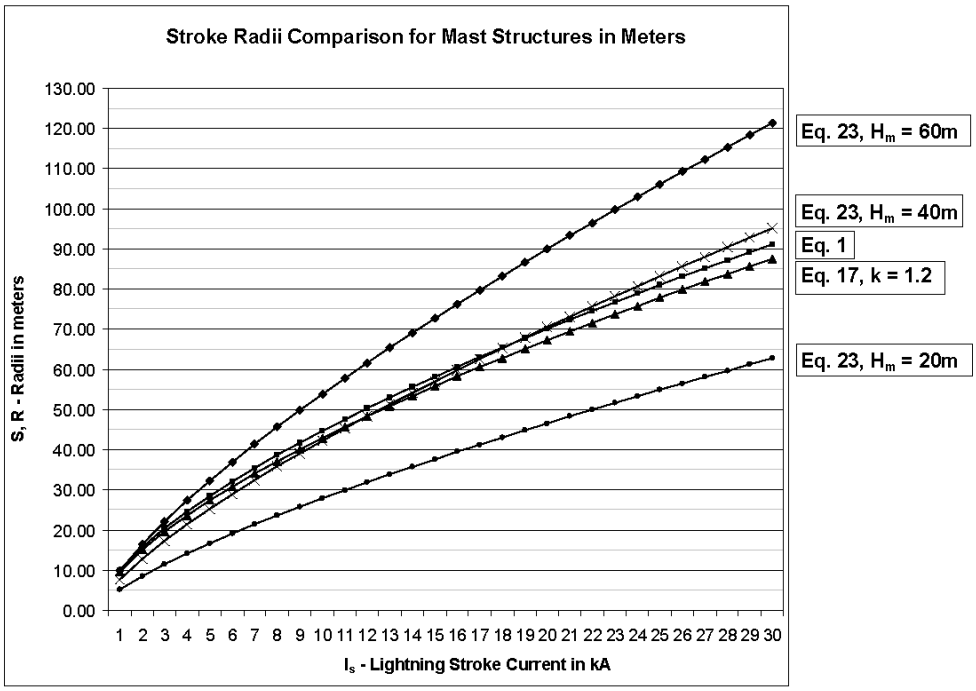

Figure 38—Comparison of striking distance to strike currents for shielding mast structures

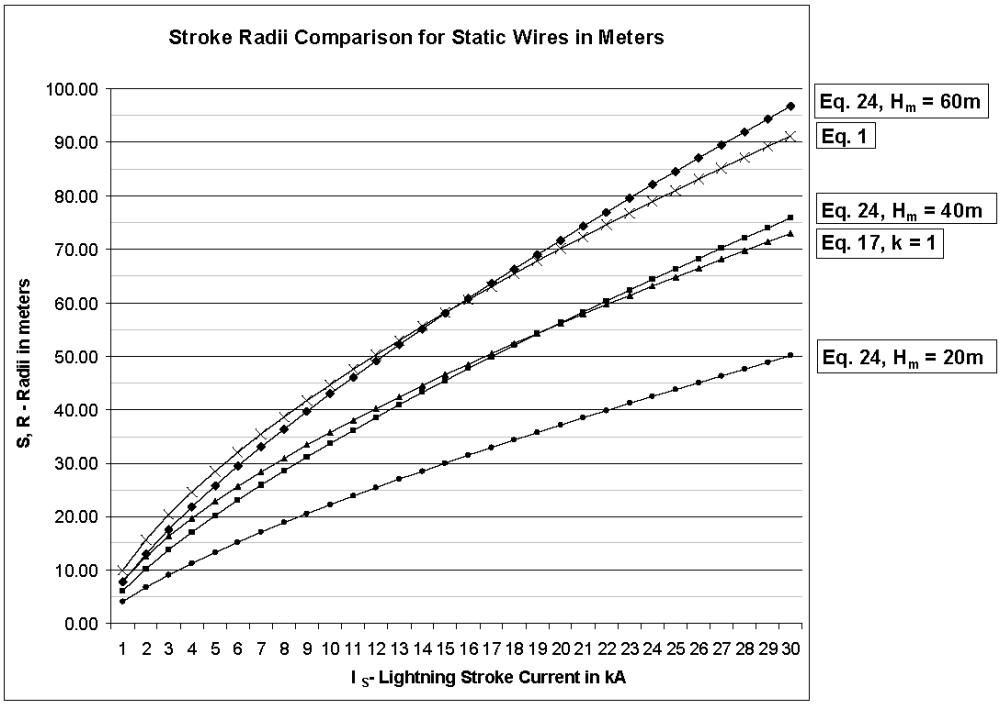

Figure 39—Comparison of striking distance as a function of strike current for shielding static wire structures

Copyright © 2013 IEEE. All rights reserved.

Copyright The Institute of Electrical and Electronics Engineers, Inc.
Provided by IHS under license with IEEE
No reproduction or networking permitted without license from IHS

Order Number: 02120914
Sold to:EGAT [700166108393] - VARRIS.Y@EGAT.CO.TH,
Not for Resale,2016-09-15 03:57:48 UTC

6.5.4 Other considerations for Eriksson's EGM

For most substation shielding designs, shielding protection can best be completed by a combination of masts and static wires. Access to shielding structures can hinder and limit shielding structure placement. There might be physical constraint to the shielding design. The designer might make the shielding masts taller to protect a larger area, install static wiring over equipment and buswork, place masts in congested buswork areas or within fire zones, or even leave a small area unprotected for small I_s values.

Static shielding wires can be placed lower on masts to provide side lightning protection, while masts can be raised within the same design area. By combining the properties of both masts and static wiring shielding design layouts can be used to reduce or eliminate static wiring over energized bus. An arc or domed shielding design with staggered structure heights and placement can be used to provide additional shielding protection options for unusual terrain and circumstances.

6.6 Calculation of failure probability

In Mousa's EGM as presented, striking distance is reduced by a factor of 10% so as to exclude all strokes from the protected area that could cause damage. In the empirical design approach of Clause 5, a small failure rate is permitted. Linck [B88] also developed a method to provide partial shielding using statistical methods.

For the statistical approach to be valid, the size of the sample needs to be large. For power lines that extend over large distances, the total exposure area is large and the above criterion is met. It is questionable, therefore, whether the statistical approach is as meaningful for substations that have very small exposure areas by comparison.

Engineers do, however, design substation shielding that permits a small statistical failure rate. Orrell [B115] has developed a method of calculating failure rates for the electrogeometric rolling sphere method.

With Eriksson EGM, the radius of attraction calculated from Equation (23), Equation (24), Equation (25), and Equation (26) will likely provide complete coverage for I_s equal to I_c. The probability of shielding failure for the Eriksson EGM is given by the area of protected coverage times the average annual ground flash density. Where I_{sl} of the design is set above I_c critical, there will be a probability of failure. For the application ranges of substations, Orrell [B115] can be used.

7. Alternative models of lightning interception

In this clause the guide reviews some non-conventional lightning attachment models and design methods. There is considerable controversy about the validity of some of these alternative models. The lightning shielding requirements of these alternative models as they compare to the historical models and the EGM of the two sample substations in this guide can be reviewed in Table B.22 and Table B.23. Scientific investigation to demonstrate the effectiveness of these methods for substation shielding is ongoing.

NOTE—IEEE does not recommend or endorse commercial offerings. It is important that the design engineer determines the validity of the claimed performance of any such systems.

7.1 Leader propagation models and methods for substation shielding

Over the last two decades, many models for lightning attachment to ground structures have been developed by various research groups around the world. Many of these efforts have remained as viable scientific

Copyright © 2013 IEEE. All rights reserved.

Copyright The Institute of Electrical and Electronics Engineers, Inc.
Provided by IHS under license with IEEE
No reproduction or networking permitted without license from IHS

Order Number: 02120914
Sold to:EGAT [700166108393] - VARRIS.Y@EGAT.CO.TH,
Not for Resale,2016-09-15 03:57:48 UTC

models. A small number of models have been developed further, into practical engineering methods, for positioning air terminations in order to reduce the probability of losses due to lightning. A smaller number of models can be applied to the task of shielding a substation against direct lightning strokes.

Despite the differences that can be seen in terms of scientific aspects and engineering practicalities, a common theme among the majority of the new models is the claim that leader propagation (both downward and upward) plays a very important role in the lightning attachment process. These theories recognize that the initiation of upward leaders not only depends on the charge of the downward leader but also on the geometry and position of the point of initiation. One of the mathematical outcomes of this consideration is that the striking distance is a function of the height of the lightning mast, shield wire, structure, etc., as well as the charge on the downward leader. This position differs considerably from the previously discussed EGMs which assume lightning attachment scenarios follow the "final jump." These contrasting theories are depicted in Figure 34.

In this clause, four recent models and/or methods are summarized, namely the collection volume/field intensification factor method, leader progression model, leader inception theory, and the self-consistent leader inception model.

7.1.1 Collection volume method (CVM)/field intensification factor method (FIFM)

Eriksson [B46], [B49], [B50] was the first to propose the improved electrogeometric model, which took into account the dependence of striking distance on the structure height in addition to the known dependence on peak stroke current I_s (or downward leader charge). In considering height as an important variable, the model allowed for the electric field intensification created by the structure. The degree of field intensification is defined by the field intensification factor, K_i.

Hereafter, the extension of the Eriksson EGM into a practical, three-dimensional air terminal placement method will be referred to as the *collection volume method* (CVM) or *field intensification factor method* (FIFM). Detailed descriptions of the CVM can be found in Eriksson [B46], D'Alessandro and Gumley [B42], and D'Alessandro [B41]. Following is a summary of the main concepts.

For substation buswork, equipment, and structures, the K_i is determined to a large extent by the height and width, but the shape and radius of curvature of the features are also important. In the case of vertical air terminations, such as free-standing masts, the K_i depends on the height and tip radius of curvature, as the authors have claimed in numerous papers (D'Alessandro [B41], Moore, Aulich, and Rison [B97], [B98]). For horizontal air terminations, such as shield wires, similar concepts are applied. In addition, when air terminations are elevated, e.g., positioned on structures, the K_is are multiplied by a factor that depends on the structure dimensions and the location of the air termination on the structure (D'Alessandro [B41]).

This design concept assumes all points on a structure are able to launch an intercepting upward leader. Those points are differentiated based on the spatial electric field and degree of field enhancement. This value, at any point in space, $K_i(x,y,z)$, is computed using numerical techniques such as the finite element method (FEM). Figure 40 shows examples of such an analysis.

Copyright © 2013 IEEE. All rights reserved.

Copyright The Institute of Electrical and Electronics Engineers, Inc.
Provided by IHS under license with IEEE
No reproduction or networking permitted without license from IHS

Order Number: 02120914
Sold to:EGAT [700166108393] - VARRIS.Y@EGAT.CO.TH,
Not for Resale,2016-09-15 03:57:48 UTC

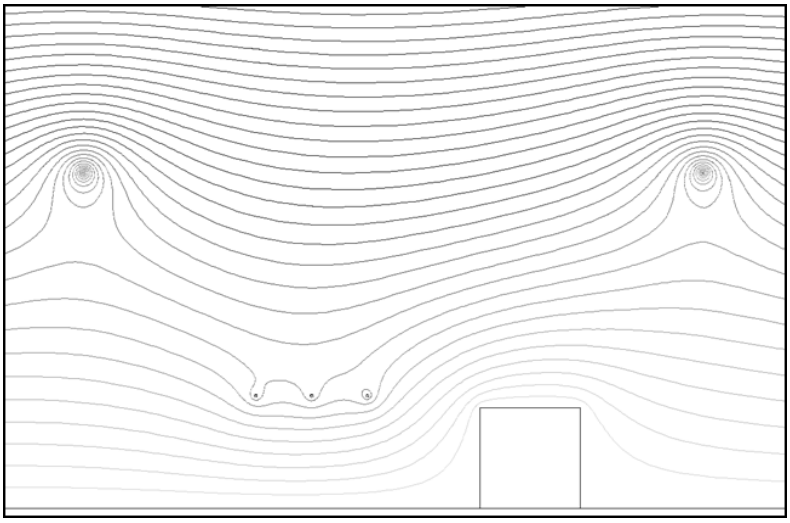

a.

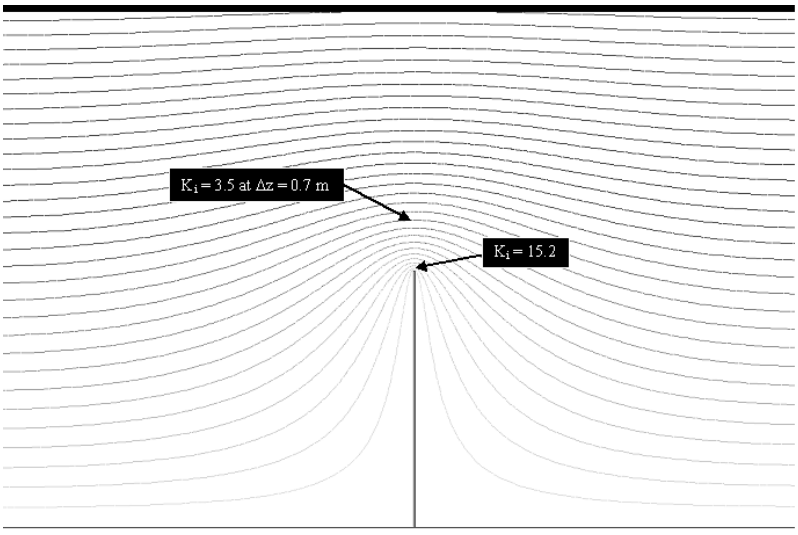

b.

Figure 40—Examples of electric field analysis (in this case, using the FEM): (a) equipotential distribution around shield wires in part of a substation; (b) K_i values around a lightning mast in a substation (mast height is 15.5 m).

The CVM considers the approach of the lightning downward leader to a structure and, using the $K_i(x,y,z)$ of the air terminations and the all of the "competing features"—such as structure perimeter, equipment, buswork, etc.—determines the point at which an upward leader will be launched from each location. Eriksson's original model used the critical radius concept (Carrara and Thione [B28]) to determine leader inception, but any other valid leader inception criterion can be used (e.g., Carrara and Thione [B28], Lalande, et al. [B82], [B83], Petrov, Petrova, and Waters [B120], Petrov and Waters [B121], Rizk [B127], or Rizk [B128]). In other words, the CVM is not tied to any one particular leader inception criterion.

Furthermore, the CVM stipulates that interception will only occur if an adjacent competing feature does not "win the race" to interception with the downward leader. This criterion introduces a "time" variable which is taken into account by the ratio of downward and upward leader velocities, K_v. The median value for this ratio, in this model, is assumed to be of the order of unity (Miyake [B96], Yokoyama, Miyake, and Suzuki [B150]).

Copyright © 2013 IEEE. All rights reserved.

Copyright The Institute of Electrical and Electronics Engineers, Inc.
Provided by IHS under license with IEEE
No reproduction or networking permitted without license from IHS

Order Number: 02120914
Sold to:EGAT [700166108393] - VARRIS.Y@EGAT.CO.TH,
Not for Resale,2016-09-15 03:57:48 UTC

The above analysis produces a parabolic-like volume above the prospective strike point, as illustrated in Figure 41a. This volume represents the three dimensional "capture" or "collection volume" of that point. For a particular downward leader charge and ratio of propagating leader speeds, the authors claim that a downward leader will only terminate at the nominated point if the striking distance is attained and the leader path is contained within the velocity or propagation related boundary of the collection volume. Collection volumes are calculated for all points of interest around the substation, i.e., air terminations, structure corners and edges, equipment, buswork, conductors, etc. A simple example is shown in Figure 41b.

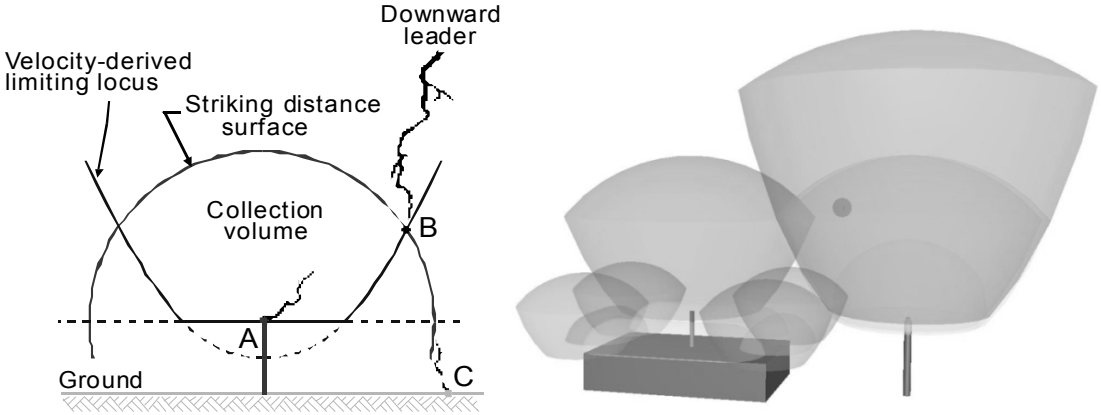

Figure 41—(a) Definition of parabolic-like collection volume for a prospective strike point. (b) A three-dimensional view showing collection volumes computed for various critical points (air terminations and competing features) around a site.

Like all EGMs, an important user-defined parameter in the CVM is the *lightning protection level* (LPL), sometimes called the *interception efficiency*. The LPL is derived from a standard cumulative frequency distribution of lightning stroke currents, such as the one shown in Figure 4. For substations, bus/equipment/insulator CFO/BIL can be equated to the minimum stroke currents that need to be intercepted, as shown in Table 2. For example, for an insulator BIL of 395 kV, Table 2 implies that 99% of all lightning flashes have a peak stroke current exceeding 2.9 kA and are likely to be intercepted. The remaining 1% of (low-energy) strikes might bypass the masts or shield wires. Such "risk management" is an accepted part of the process when designing any lightning protection system for any substation application.

The collection volume information is summarized in the form of an *attractive radius,* R_a, which is the sectional radius of the collection volume, i.e., radius at the intersection point of the striking distance surface and velocity-limited boundary. The authors claim that the attractive radius is an important output parameter of a collection volume analysis as it is used to compute the attractive or capture area of each point of interest around the substation, regardless of whether it is a lightning mast/wire or a competing feature. Figure 42 presents example plots of the attractive radius for masts and shield wires as determined by the CVM.

When the collection volumes of all points have been computed, the attractive areas are compared to determine whether the pre-specified interception efficiency has been achieved. This concept is illustrated in Figure 43 for part of a substation site. Five lightning masts 20 m high were positioned around the site. Their combined attractive areas are shown by the solid line. The competing features (i.e., structures, equipment, buswork, etc.) have a combined attractive area shown by the dashed lines.

Copyright © 2013 IEEE. All rights reserved.

Copyright The Institute of Electrical and Electronics Engineers, Inc.
Provided by IHS under license with IEEE
No reproduction or networking permitted without license from IHS

Order Number: 02120914
Sold to:EGAT [700166108393] - VARRIS.Y@EGAT.CO.TH,
Not for Resale,2016-09-15 03:57:48 UTC

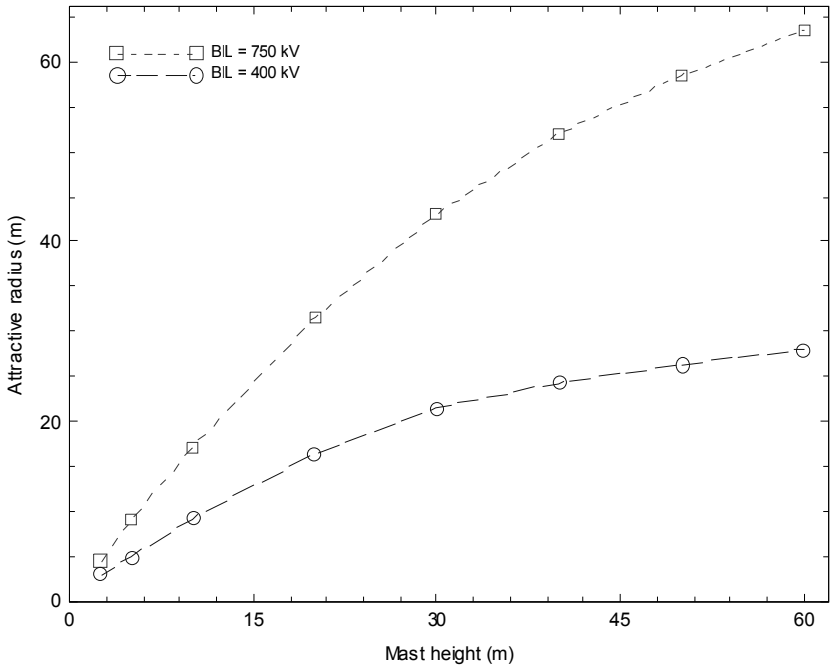

a.

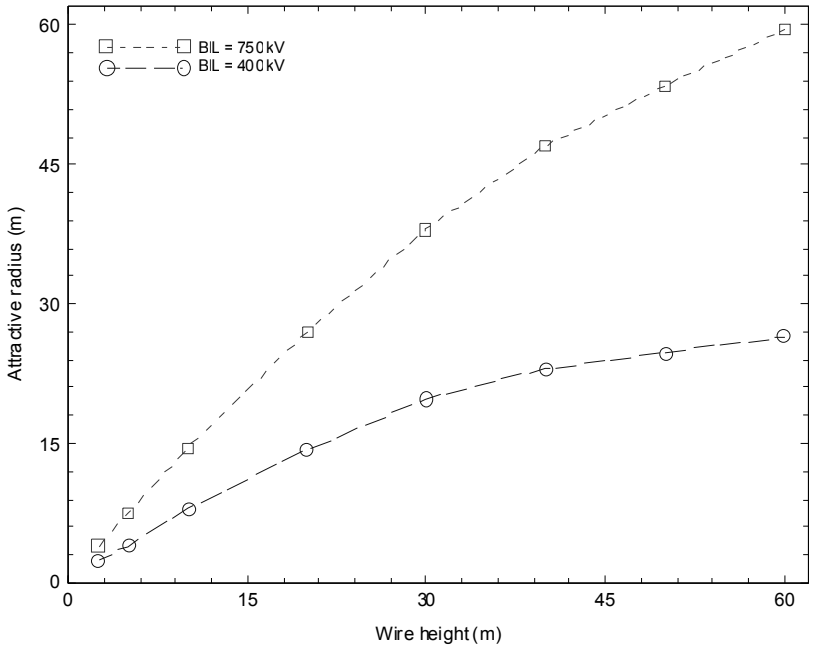

b.

Figure 42—Example of the attractive radius determined with the CVM for (a) lightning masts and (b) shield wires, for a BIL of 400 kV and 750 kV (LPL of 99% and 97% respectively). Calculations were performed for a cloud charge height of 5000 m and velocity ratio of 1.1 for a substation site at sea level.

Copyright © 2013 IEEE. All rights reserved.

Copyright The Institute of Electrical and Electronics Engineers, Inc.
Provided by IHS under license with IEEE
No reproduction or networking permitted without license from IHS

Order Number: 02120914
Sold to:EGAT [700166108393] - VARRIS.Y@EGAT.CO.TH,
Not for Resale,2016-09-15 03:57:48 UTC

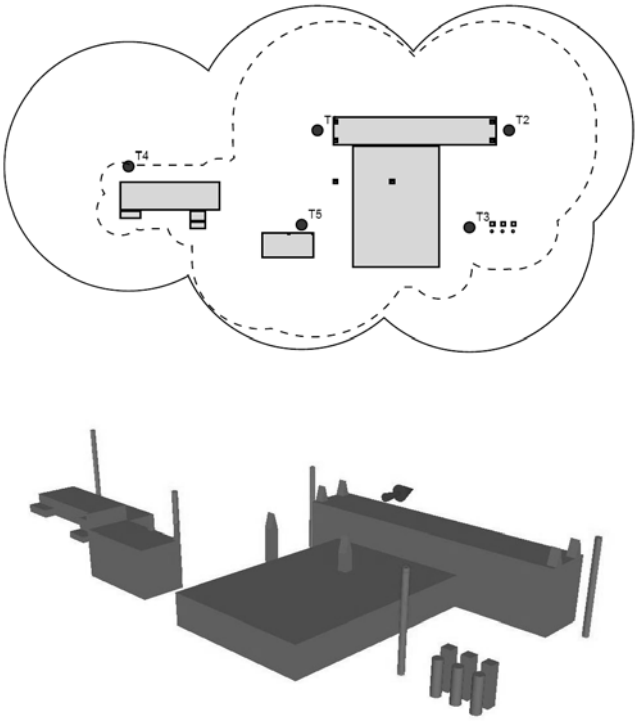

Figure 43—Example of the result of a CVM design for a part of a substation site

There are two key features that distinguish the CVM from previously discussed EGMs. The CVM:

a) Depends on computations of three-dimensional electric fields, where
   1) Attractive radius increases as the air termination and competing feature heights increase
   2) All feature dimensions (e.g., height, width, shape, etc.) are taken into account, and
   3) Physical criteria for upward leader inception must be met
b) Enforces the concept of "competing features," where all points around a substation are considered capable of launching upward leaders

Finally, two further aspects of the CVM need to be described in order to provide a complete picture of the concepts required to implement the method, namely:

a) Quantitative corrections for the atmospheric conditions affecting ionization processes in air and hence upward leader inception
b) Allowance for tall structures (> 60 m) that might be subjected to so-called "side strikes" and lightning protection system shielding failures due to the large vertical separation between the protection system and lower competing points

Quantitative corrections will be described briefly here but the allowance for tall structures will not be reviewed because substation protection rarely deals with heights greater than 60 m. For more information on this topic, the reader is referred to D'Alessandro and Gumley [B42].

The electric field strength required for air breakdown varies directly with air pressure (or density) and humidity. The dependence on humidity is relatively small and can generally be ignored. However, the dependence on air pressure is significant. For a decrease in air pressure, there is a decrease in the critical

Copyright © 2013 IEEE. All rights reserved.

Copyright The Institute of Electrical and Electronics Engineers, Inc.
Provided by IHS under license with IEEE
No reproduction or networking permitted without license from IHS

Order Number: 02120914
Sold to:EGAT [700166108393] - VARRIS.Y@EGAT.CO.TH,
Not for Resale,2016-09-15 03:57:48 UTC

breakdown field. This affects the value used in the calculations dealing with upward leader inception upon the approach of the downward leader when considering substations at higher altitudes.

A number of methods are available for making the air breakdown correction as a function of height above sea level. A first order approximation was given in D'Alessandro and Gumley [B42]. If more precision is required, it is obtained from the value of E_o for dry air, defined from $E/N = 1.2\times10^{-19}\ Vm^2$. This is the value for which the rate of ionization of electrons equals the rate of electron attachment to form negative ions (Lowke [B89]). Here, E is the electric field in V/m and N is the number gas density in m^{-3}. The value of N can be obtained for any temperature and pressure from the gas law, $N = P/kT$.

In summary, the procedure for implementing the CVM for protecting substations against lightning strokes is as follows:

a) Specify all elevated object heights, widths, and shapes.

b) Identify the "most probable" competing features (structure perimeters, sharper/more pointed features of substation equipment, buswork, etc.).

c) Select the type (lightning mast or shield wire), height, number, and location of the air terminations (using a rough estimate of the attractive area of each—Equation (23) and Equation (24) of the Eriksson EGM can be used for this purpose).

d) Specify the basic physical parameters:

   1) BIL or CFO (translate to downward leader charge/prospective peak current/LPL, as per Table 2 or similar);

   2) Cloud base height (typically 3 to 5 km);

   3) Site elevation or altitude above sea level, applying the appropriate correction factor to the air breakdown field if applicable;

   4) Leader velocity ratio.

e) Compute the electric field intensification factors for all air terminations and nominated competing features.

f) For all air terminations and nominated competing features, compute the:

   1) Collection volume (striking distance surface and the velocity/leader propagation-based boundary);

   2) Attractive radius from the intersection point of the striking distance surface (for the given leader charge/BIL/CFO) and the propagation-based boundary.

g) Apply the attractive radii or capture areas to their respective air terminations and competing features.

h) Check to see if the air termination capture areas completely overlap the capture areas of all competing features (a plan view is useful here).

i) If there is not complete overlap, relocate some of the existing air terminations or increase their height, or use more air terminations. Repeat the above steps until complete overlap is achieved.

7.1.2 Leader progression model (LPM)

Based on work carried out during the 1980s, in 1990, Dellera and Garbagnati [B45] published their leader progression model to describe the lightning attachment process. The work was refined several years later by Bernardi et al. [B20]. In the LPM, the progression of the downward leader in time and space was taken into account, based on the temporal evolution of the electric field. The LPM also takes into account the main physical mechanisms defined from studies of discharges in long air gaps as well as studies of

Copyright © 2013 IEEE. All rights reserved.
Copyright The Institute of Electrical and Electronics Engineers, Inc.
Provided by IHS under license with IEEE
No reproduction or networking permitted without license from IHS
Order Number: 02120914
Sold to:EGAT [700166108393] - VARRIS.Y@EGAT.CO.TH,
Not for Resale,2016-09-15 03:57:48 UTC

lightning channels. The main emphasis of the LPM is on modeling the progress of a negative downward leader and the initiation and propagation of the positive upward leader from ground object.

In terms of a computational procedure, the LPM requires an iterative calculation of the resultant electric field in order to simulate the charge in the cloud and the actual charge displaced by the leader channels as they propagate toward one another. The authors state that one of the useful features of the model is the ability to simulate strikes to structures located in various geographic conditions, e.g., flat country, valleys, ridges of hills, mountain sides, etc.

Figure 44 shows a sketch of the step-by-step nature of the simulations made in the LPM to model the lightning attachment process.

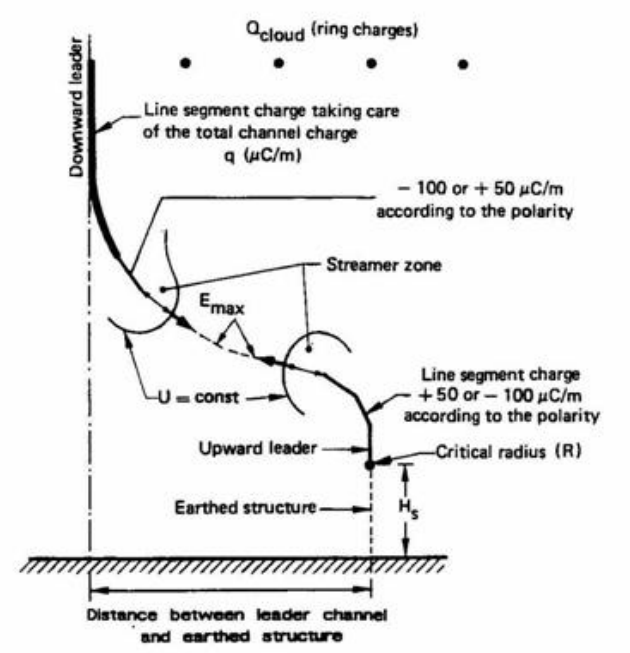

(Reprinted with permission from Dellera, L. Garbagnati E., "Lightning Stroke Simulation by Means of the Leader Progression Model. Part I. Description of the Model and Evaluation of Exposure of Free-Standing Structures," *IEEE Transactions on Power Delivery,* vol. 5, pp. 2009–22, 1990.)

Figure 44—Sketch of the step-by-step progression of the lightning attachment process, as simulated in the LPM calculations

Following are the key elements and assumptions of the LPM:

a) Cloud charges are simulated to allow calculation of the quasi-stationary ground field.

b) The electric field due to the descending negative leader is also calculated based on a relationship between leader charge per unit length and prospective return stroke current.

c) It is assumed that the downward leader follows electric field lines which means that the leader path is influenced by the ground structure from the instant it leaves the cloud base.

d) The criterion for upward leader inception is based on the concept of critical radius and the dependence of such radius on height above ground for both masts and conductors.

Copyright © 2013 IEEE. All rights reserved.
--`,,,,,,`-`-`,,`,,`,`,,`---
Copyright The Institute of Electrical and Electronics Engineers, Inc.
Provided by IHS under license with IEEE
No reproduction or networking permitted without license from IHS
Order Number: 02120914
Sold to:EGAT [700166108393] - VARRIS.Y@EGAT.CO.TH,
Not for Resale,2016-09-15 03:57:48 UTC

e) The upward leader speed is assumed to be a function of the mean voltage gradient between the upward and descending leader tips at any instant.

f) The model requires extensive field calculations during negative leader and upward leader propagation.

g) Interception occurs when the "final jump" conditions are met between the two leaders.

Details on the application of the LPM can be found in Berger and Vogelsanger [B20] and Dellera and Garbagnati [B45], but the most up-to-date case studies and applications are found in CIGRE monographs [B34]. The LPM was applied to a range of protection scenarios, the key parameter determination being the lateral distance (LD) between the downward leader channel and the potential strike point (e.g., a structure) for a given prospective stroke current (or, more fundamentally, downward leader charge). By increasing the horizontal distance between the downward leader and the earthed structure, Dellera and Garbagnati evaluated the maximum LD at which the structure is still struck and the maximum protective distance (PD) at ground level.

Of all the many case studies considered by Dellera and Garbagnati, the two most relevant to substation protection are the "slender, free-standing structure" (i.e., a mast) and horizontal conductors (for shielding of transmission lines), both in flat territory. Figure 45 shows the LD results for masts or slender structures. According to CIGRE Task Force 33.01.03 [B34], PD is approximately equal to LD for slender structures. Figure 46 shows the LD and PD results for horizontal conductors.

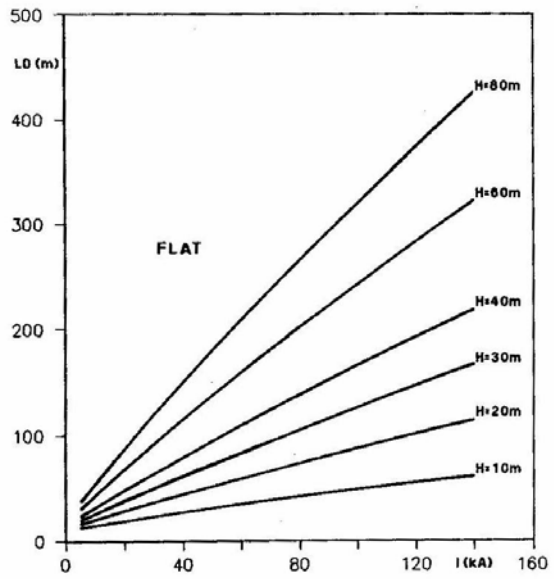

(From Dellera, L. Garbagnati E., "Lightning Stroke Simulation by Means of the Leader Progression Model. Part I. Description of the Model and Evaluation of Exposure of Free-Standing Structures," *IEEE Transactions on Power Delivery,* vol. 5, pp. 2009–22, 1990.)

Figure 45—The lateral distance (LD) for masts, obtained with the LPM, as a function of lightning current and mast height

Copyright © 2013 IEEE. All rights reserved.

Copyright The Institute of Electrical and Electronics Engineers, Inc.
Provided by IHS under license with IEEE
No reproduction or networking permitted without license from IHS

Order Number: 02120914
Sold to:EGAT [700166108393] - VARRIS.Y@EGAT.CO.TH,
Not for Resale,2016-09-15 03:57:48 UTC

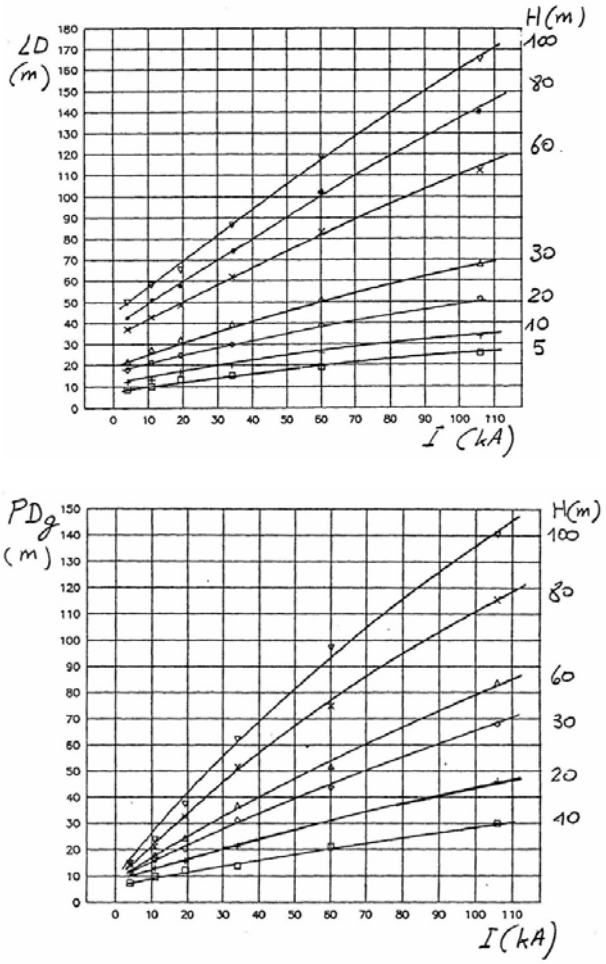

(From CIGRE Task Force 33.01.03, "Lightning Exposure of Structures and Interception Efficiency of Air Terminals," Paris: CIGRE, Technical Brochure 118, Oct. 1997.)

Figure 46—The lateral distance (LD) and protective distance (PD) for horizontal conductors, obtained with the LPM, as a function of lightning current and conductor height

7.1.3 Leader inception theory (LIT)

The leader inception theory and model was developed by Rizk [B127], [B128], [B130] during the 1990s. The theory was further refined for substation calculations in a 2010 paper by Rizk [B129] and is the basis for the remainder of this clause. The basis for this model is that an object struck by lightning is an active participant in the attachment process. Under critical conditions, the author assumes this participation is manifested by the formation and propagation of an upward connecting leader, which seeks to encounter the downward stepped leader in a so-called "final jump."

A fundamental quantity used in the model is the space potential created by the cloud and downward leader charges. For a given ambient ground field due to cloud charges and a prospective return stroke current, the space potential is determined at the height above ground of the tip of a lightning rod or a ground wire, but in the absence of these objects which otherwise are maintained at ground potential.

Copyright © 2013 IEEE. All rights reserved.

Copyright The Institute of Electrical and Electronics Engineers, Inc.
Provided by IHS under license with IEEE
No reproduction or networking permitted without license from IHS

Order Number: 02120914
Sold to:EGAT [700166108393] - VARRIS.Y@EGAT.CO.TH,
Not for Resale,2016-09-15 03:57:48 UTC

In the case of a sensibly uniform total ground field E_g, the space potential U_{sp} of an object of height h above ground is assumed to be:

$$U_{sp} = E_g h \tag{27}$$

In the more general case:

$$U_{sp} = \int_0^k E_g(z)dz \tag{28}$$

In the above equations, E_g is function of the cloud and/or downward leader charge, the latter being in turn a function of the prospective return stroke current. The model shows that for the basic configuration of a vertical slender rod or mast ($h/r >> 1$, where r is the rod radius), the critical, continuous upward leader inception space potential U_{lc} is assumed to be:

$$U_{lc} = \frac{1556}{1+\frac{3.89}{h}} \text{(kV,m)} \tag{29}$$

For the other basic configuration of a ground wire of radius r_o and height h, U_{lc} is assumed to be:

$$U_{lc} = \frac{2247}{1+\frac{5.15-5.59\ln r_o}{h\ln\frac{2h}{r_o}}} \text{(kV,m)} \tag{30}$$

Initially, it was assumed that, during the later stages of the attachment process, a constant ratio exists between positive and negative leader speeds. In a revised version of the Rizk model, both speeds are computed continuously along the leader trajectories. However, for structure heights and return stroke currents most relevant to substations, it is assumed by the author that the difference in outcomes between the two versions of the model is relatively insignificant.

Through extensive numerical analysis of structures of different heights and within the relevant return stroke current (I) range, Rizk assumes an attractive radius R_a for a rod and a lateral attractive distance D_a for a ground wire. For a rod or mast, it was assumed that:

$$R_a(h,I) = A\ h^{\beta_m}\ I^{\alpha_m} \tag{31}$$

where, in the range $10 \le h \le 50$ m and $5 \le I \le 31$ kA,

$A = 2.57$
$\beta_m = 0.422$
$\alpha_m = 0.615$

and the units applied in (31) for h and R is m and for I is kA.

Copyright © 2013 IEEE. All rights reserved.

Copyright The Institute of Electrical and Electronics Engineers, Inc.
Provided by IHS under license with IEEE
No reproduction or networking permitted without license from IHS

Order Number: 02120914
Sold to:EGAT [700166108393] - VARRIS.Y@EGAT.CO.TH,
Not for Resale,2016-09-15 03:57:48 UTC

Similarly, for a ground wire, it was assumed that:

$$D_a(h, I) = B\ h^{\beta_c}\ I^{\alpha_c} \tag{32}$$

where, in the range $10 \le h \le 50$ m and $5 \le I \le 31$ kA,

$B = 1.57$
$\beta_c = 0.445$
$\alpha_c = 0.694$

with the units h and R is m and for I is kA.

In terms of the EGM, the notion of an attractive radius, R_a, around a vertical rod in which any descending leader of prospective return stroke current, I, will be intercepted by the mast corresponds to the quantity:

$$R_{EGM} = \sqrt{S_r^2 - (S_g - h)^2)} \tag{33}$$

where

S_r = the so-called striking distance of the rod
S_g = the striking distance to ground

both being functions of I. For the simple case of assuming $S_r = S_g = S$, Equation (33) simplifies to:

$$R_{EGM} = \sqrt{2\,S\,h - h^2} \tag{34}$$

which is valid for $S > h$.

In general, S is assumed to take the form:

$$S = D\ I^{\alpha} \tag{35}$$

Different values have been adopted for D and α. Typical values are $D = 8$ or 10 and $\alpha = 0.65$. If $D = 8$ and $\alpha = 0.65$ are substituted into Equation (34), the attractive radius of the EGM becomes:

$$R_{EGM} = \sqrt{16\,h\,I^{0.65} - h^2} \text{ } (h \text{ and } R \text{ is m and for } I \text{ is kA}) \tag{36}$$

which, as in Equation (31), is function of both h and I although the sensitivity to both h and I is not the same in both models. Detailed comparison of numerical evaluation of Equation (31) and Equation (35), in the range of interest of h and I, shows that Rizk's expression of the attractive radius is more sensitive to the mast height than the EGM.

For taller masts with $h > S$, the EGM assumes that:

$$R_{EGM} = S(I) \tag{37}$$

Copyright © 2013 IEEE. All rights reserved.

Copyright The Institute of Electrical and Electronics Engineers, Inc.
Provided by IHS under license with IEEE
No reproduction or networking permitted without license from IHS

Order Number: 02120914
Sold to:EGAT [700166108393] - VARRIS.Y@EGAT.CO.TH,
Not for Resale,2016-09-15 03:57:48 UTC

This assumes that the attractive radius becomes completely independent of the mast height, in contradiction to Equation (31) of the Rizk model.

Rizk provides basic expressions defining the assumed protection zone of masts and ground wires. As these are important for substation protection, they are now described in more detail.

For a single mast of height *h,* the protection zone in *(r, z)* coordinates is assumed:

$$\frac{z}{h} = \left[1 - \frac{r}{R_a(h, I)}\right]^{1/\beta m} \tag{38}$$

with R_a *(h, I)* from Equation (31), which defines a parabolic cone. This is in contrast to Whitehead's EGM, which defines a hemispherical surface. Furthermore, in contrast to the EGM, there is no "useless height" as the author assumes any increase in the mast height will result in a favorable effect on the protection zone.

In fact, the author's numerical evaluation assumes that, for each mast height *h* and return stroke current *I*, the protection zone according to the Rizk model can be approximated by a circular arc. However, the radius of such a circle will be not only a function of the return stroke current, as is the case for the rolling sphere method, but also of the mast height.

For two masts of height *h* and spacing *d,* the author assumes maximum permissible height z_m of a protected rod-type object (spherical field in the object vicinity) placed at mid-point is assumed:

$$\frac{z_m}{h} = \left[1 - \left(\frac{d}{2R_a(h, I)}\right)^2\right]^{\frac{1}{2\beta_m}} \tag{39}$$

The quantity [2 R_a*(h, I) / d*] is termed the *protective ratio, K*, where $K > 1$.

In the (x, z) plane, the protection zone for a conductor-type object (cylindrical field in the object vicinity) is limited by the curve:

$$\frac{z_m}{h} = \left[1 - \left(\frac{x}{D_a(h, I)}\right)\right]^{\frac{1}{\beta_c}} \tag{40}$$

with D_a*(h, I)* from Equation (32), which defines a parabolic wedge.

With two ground wires of height *h* and spacing *d*, the protective ratio *K* is defined as

$$K = 2\, D_a(h, I) / d \tag{41}$$

and the criterion $K > 1$ indicates full coverage of the zone between the two ground wires.

Copyright © 2013 IEEE. All rights reserved.

Copyright The Institute of Electrical and Electronics Engineers, Inc.
Provided by IHS under license with IEEE
No reproduction or networking permitted without license from IHS

Order Number: 02120914
Sold to:EGAT [700166108393] - VARRIS.Y@EGAT.CO.TH,
Not for Resale,2016-09-15 03:57:48 UTC

Another criterion assumed by Rizk is that upward leader inception occurs on the ground wires before conditions for leader inception are satisfied at the protected object of maximum permissible height z_m for a rod-type or z_c for a conductor-type object. A safety factor $K_s < 1$, e.g., $K_s = 0.9$, can be applied to the maximum value z_c. The minimum horizontal separation x_o between an object protected by two ground wires and any such wire is assumed to be:

$$x_o = R_a(z_m, I) - D_a(h, I) \tag{42}$$

for a rod-type protected object, and

$$x_o = D_a(z_c, I) - D_a(h, I) \tag{43}$$

for a conductor-type object.

This effect of the nature of the protected object is another characteristic of the Rizk model and can only be accounted for in the EGM through the introduction of arbitrary factors in the striking distance relation.

To complete this subclause, some practical examples of Rizk's LIT will be provided. Figure 47 shows a comparison of the protection zone (at 99.5% level) around a 20 m mast according to both the Rizk model and the EGM with $D = 8$ and $D = 10$. The agreement is good but, as mentioned above, the discrepancy depends on both the mast height and return stroke current.

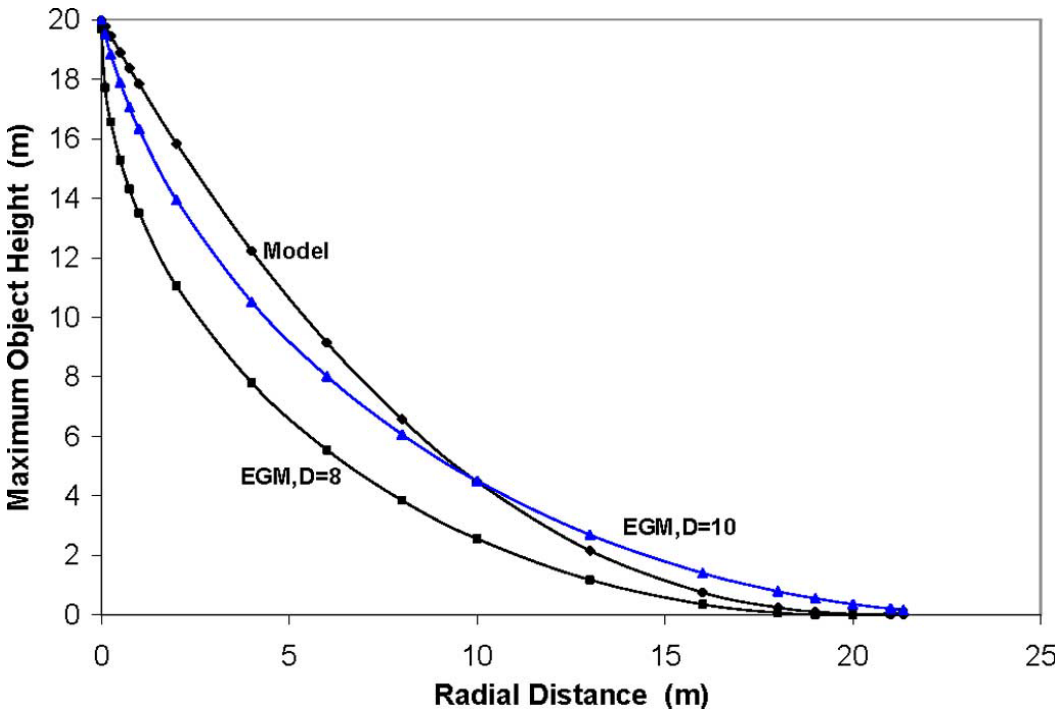

Figure 47—Comparison of the protection zones (at 99.5% level I = 4 kA) around a 20 m mast for the Rizk model and EGM

Copyright © 2013 IEEE. All rights reserved.
Copyright The Institute of Electrical and Electronics Engineers, Inc.
Provided by IHS under license with IEEE
No reproduction or networking permitted without license from IHS
Order Number: 02120914
Sold to:EGAT [700166108393] - VARRIS.Y@EGAT.CO.TH,
Not for Resale,2016-09-15 03:57:48 UTC

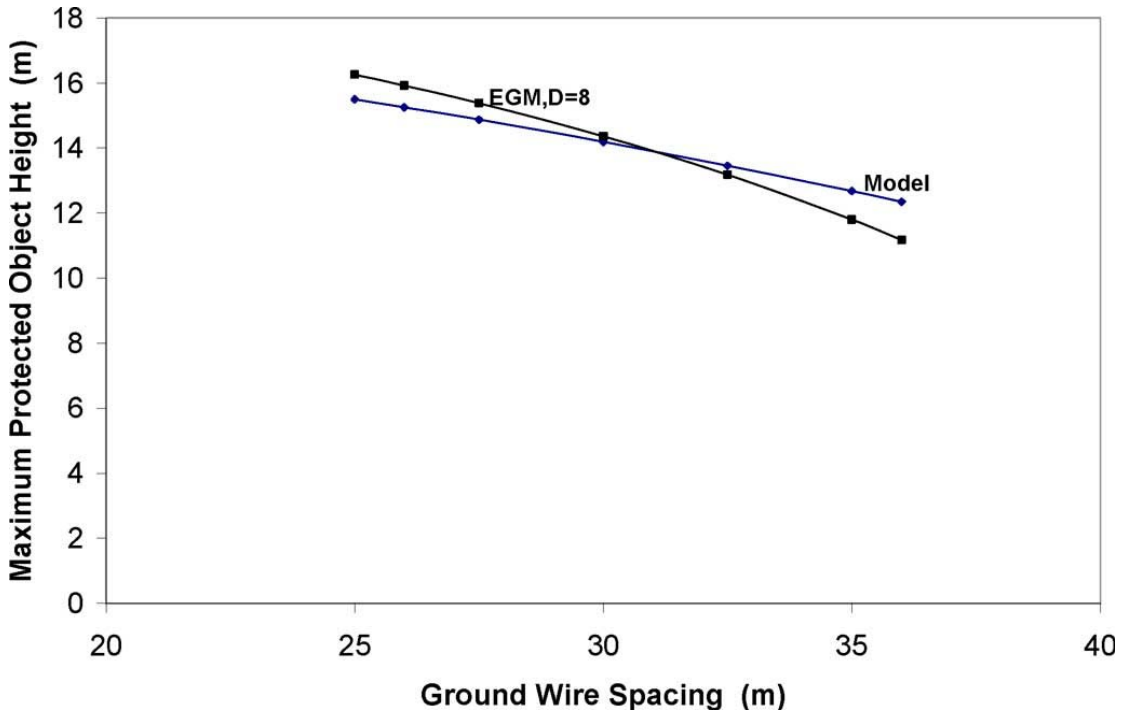

Figure 48—Variation of maximum height of rod-type protected object with shield wire spacing, for a shield wire height of 20 m and return stroke current of 5 kA

Figure 48 shows the variation of the maximum height of an object protected by double shield wire as function of the spacing for a constant shield wire height of 20 m and return stroke current of 5 kA, obtained with the Rizk model and the EGM with D = 8. At greater heights, the Rizk model allows for higher protected objects compared with EGM.

Figure 49 shows the Rizk model results for the dependence of the minimum height needed for four masts placed in the corners of a rectangle of sides d_1, d_2 (with $d_1 > d_2$), on the effective distance d_e defined by:

$$d_e = \sqrt{\left(\frac{d_1}{2}\right)^2 + \left(\frac{d_2}{2}\right)^2} \tag{44}$$

for return stroke currents of 10 kA and 5 kA.

Copyright © 2013 IEEE. All rights reserved.
Copyright The Institute of Electrical and Electronics Engineers, Inc.
Provided by IHS under license with IEEE
No reproduction or networking permitted without license from IHS
Order Number: 02120914
Sold to:EGAT [700166108393] - VARRIS.Y@EGAT.CO.TH,
Not for Resale,2016-09-15 03:57:48 UTC

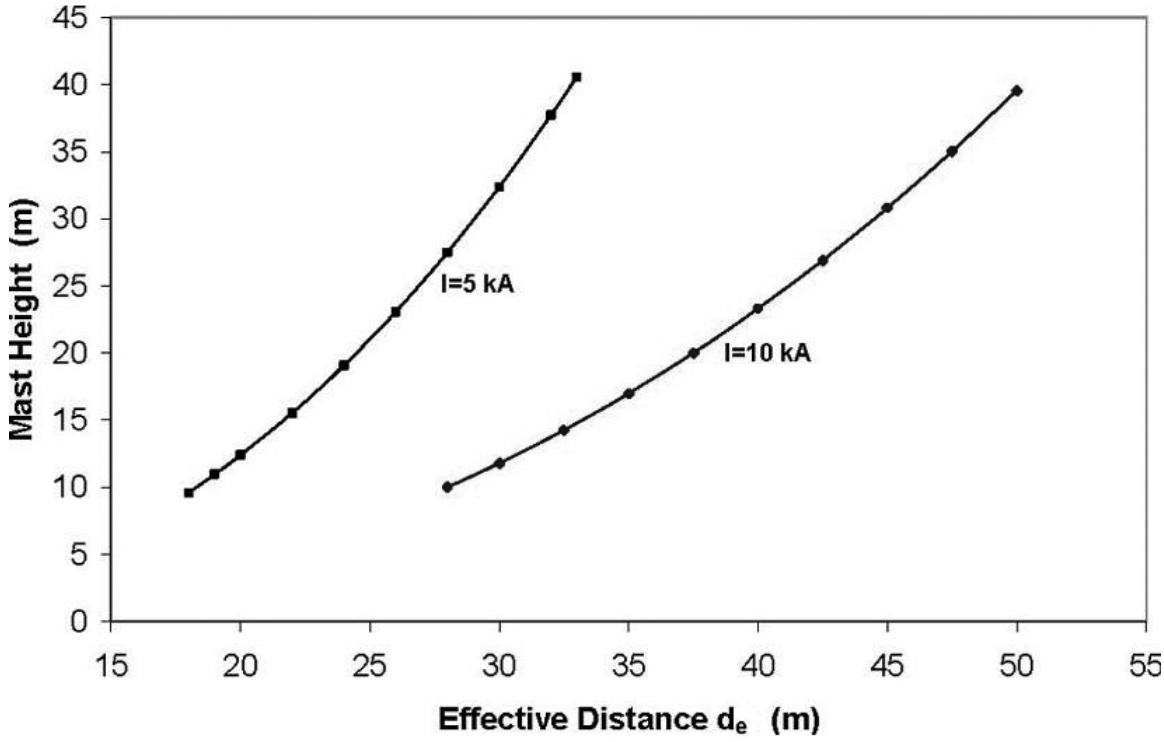

Figure 49—Dependence of the required mast height on the effective distance, d_e, in four-mast protection for a return stroke current of 10 kA and 5 kA

Finally, Figure 50 shows the variation of the bus bar-to-shield wire height ratio as function of the protective ratio for different values of the ratio of shield wire spacing to height, for a return stroke current of 10 kA.

Copyright © 2013 IEEE. All rights reserved.

Copyright The Institute of Electrical and Electronics Engineers, Inc.
Provided by IHS under license with IEEE
No reproduction or networking permitted without license from IHS

Order Number: 02120914
Sold to:EGAT [700166108393] - VARRIS.Y@EGAT.CO.TH,
Not for Resale,2016-09-15 03:57:48 UTC

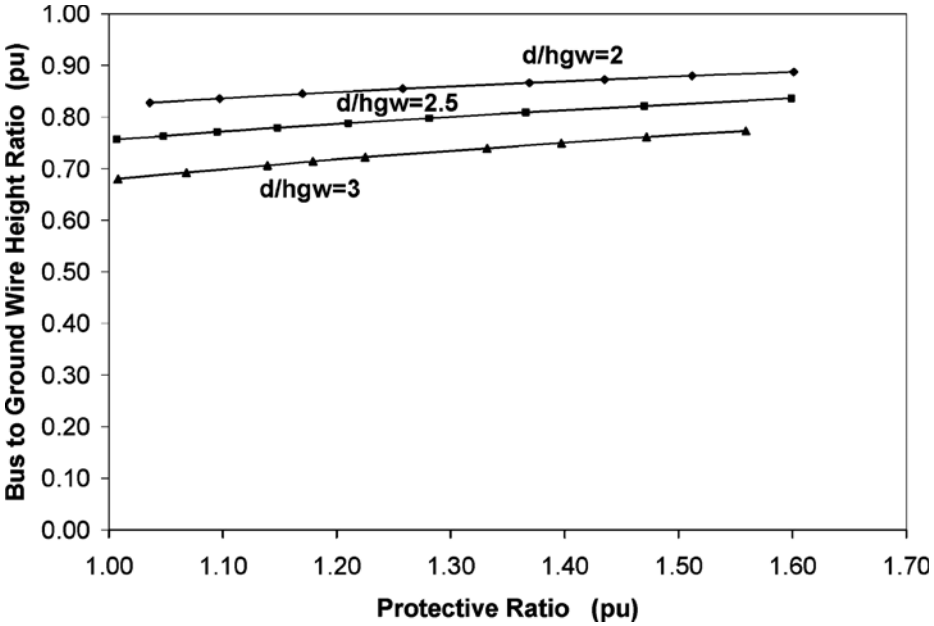

Figure 50—Variation of the maximum bus bar-to-shield wire height on the protective ratio for double shield wires with variable spacing, for *I* = 10 kA

7.1.4 Self-consistent leader inception and propagation model (SLIM)

The SLIM is a very recent model developed by researchers at Uppsala University in Sweden. The model is described in various conference papers and journal publications. The main journal papers of relevance to this review are Becerra and Cooray [B11], [B12], and Becerra Cooray, and Roman [B13].

As a result of the worldwide recognition of the importance of the upward leader in the lightning attachment process, the SLIM focuses on a generalized leader inception and propagation model. It is based on an iterative geometrical analysis of the background potential distribution of an earthed structure to simulate the first initiation and propagation of an upward connecting leader. By assuming a static field approach, the leader stabilization fields and the striking distances can be computed for lightning rods and structures. The authors state the SLIM has several advantages over existing leader inception criteria, one of them being that it can be used to analyze the effect of the space charge on the upward leader inception taking into account also the time-varying electric field produced by the descending leader.

Knowledge of the initiation and propagation of an upward moving connecting leader in the presence of a downward moving lightning stepped leader is an important step in the determination of the lateral attraction distance of a lightning flash by any grounded structure. The SLIM simulates the advancement of positive upward leaders by utilizing the presently understood physics of the process. The model uses the charge simulation method (CSM) or the finite element method (FEM) to simulate the upward continuous progression of a positive connecting leader, from its initiation to the final connection with the downward stepped leader (final jump). Thus, the main physical properties of upward leaders, namely the charge per unit length, the injected current, the channel gradient, and the leader velocity are self-consistently computed based on the analysis of the corona charge required to create a new leader segment. The authors have found that the charge per unit length of an upward leader cannot be assumed to be constant (typically taken to be ~ 50 μCm^{-1}). It depends upon the energy available at the tip of the upward leader, i.e., the electrostatic conditions imposed by the descent of the downward leader. Hence, the upward leader velocity can also vary for different prospective return stroke peak currents of the downward leader.

Copyright © 2013 IEEE. All rights reserved.

Copyright The Institute of Electrical and Electronics Engineers, Inc.
Provided by IHS under license with IEEE
No reproduction or networking permitted without license from IHS

Order Number: 02120914
Sold to:EGAT [700166108393] - VARRIS.Y@EGAT.CO.TH,
Not for Resale,2016-09-15 03:57:48 UTC

The SLIM has been used to evaluate the striking distance from corners and air terminals on buildings. The striking distance to the corners of two example structures was computed using the physical leader inception model. The results showed that striking distance not only depends upon the prospective return stroke current, as is assumed by the rolling sphere method (RSM), but also upon the geometry of the building and the lateral position of the downward leader with respect to the strike point. The authors also found that the computed leader inception zones and the lightning attraction zones of corners on buildings define asymmetric regions.

The following paragraphs describe the SLIM in more detail:

The downward leader is modeled as a distributed negative line charge. It results in a more detailed charge distribution and therefore a more detailed electric field due to the downward leader. The downward leader charge and position of the tip changes with time and lengthens vertically downward.

Electrostatic (space potential) calculations are used for calculating the streamer charge from a grounded structure. It is assumed that streamers occupy a uniform space defined by a 60º semi-angle cone and that when the streamer charge reaches 1 μC its stem is thermalized into the first leader segment (or unstable leader inception). With repeated computation of streamer charge during extension of the leader channel, it is assumed that leader propagation will continue as long as streamer charge provides enough energy to keep an increasing leader velocity. The minimum ambient field for continuous leader propagation is found to be a function of both structure geometry (building) and height above ground. Figure 51 illustrates the process.

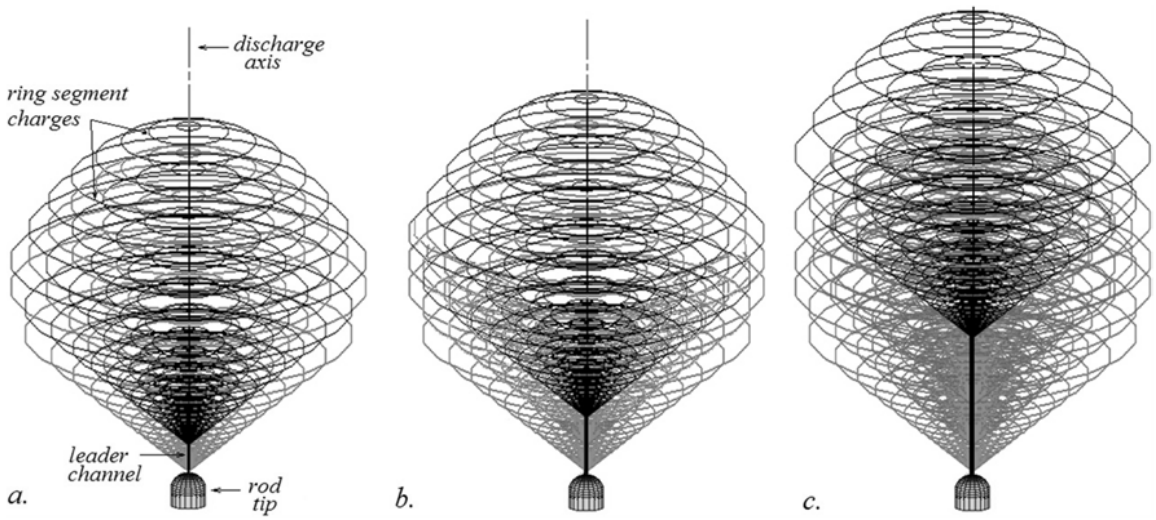

(From Becerra, M. and Cooray, V., "A Self-Consistent Upward Leader Propagation Model," *Journal of Physics D: Applied Physics,* vol. 39, pp. 3708–15, 2006. © IOP Publishing. Reproduced by permission of IOP Publishing. All rights reserved.)

Figure 51—CSM modeling of the upward leader propagation: (a), (b), and (c) show the corona zone charges in front of the leader channel as the leader propagates in the presence of the previous space charge around the discharge axis

The approximations include the following.

a) There is a known empirical relationship between the magnitude of the lightning stroke current and the charge in the downward leader.

b) The electric field is caused by the charge in the downward leader according to the charge distribution based on an evaluation by Cooray, Rakov, and Theethayi of the Berger data [B39].

Copyright © 2013 IEEE. All rights reserved.
Copyright The Institute of Electrical and Electronics Engineers, Inc.
Provided by IHS under license with IEEE
No reproduction or networking permitted without license from IHS
Order Number: 02120914
Sold to:EGAT [700166108393] - VARRIS.Y@EGAT.CO.TH,
Not for Resale,2016-09-15 03:57:48 UTC

c) The first corona formation on the study object is due to the downward leader charge and has a constant electric field across the streamer zone.

d) Any subsequent corona formation leads to unstable upward leader inception when the streamer charge is equal to or larger than 1 μC.

e) The leader channel is a symmetrical plasma cylinder with sections of different radius with a streamer corona region at its tip.

f) The electric field of each leader segment changes according to the streamer. The length of advancement of the upward propagating leader is directly proportional to the total charge in front of the tip of the leader and the charge per unit length required to thermalize a leader segment.

g) The total charge in the corona zone in front of the upward propagating tip is modeled (with the CSM) using discrete point charges, finite line charges, and uniform ring charges, or is estimated with a simplified procedure based on the geometrical analysis of the potential distribution before and after the streamer formation.

h) The proportionality factor used for the simplified streamer charge calculation is approximately the same for various types of structures and a single value can be used.

i) The volume of the corona zone charge is defined by a 60 degree angle from the axis of the corona zone and a zone length can be determined by using the streamer propagation field.

j) The objects to be studied are modeled taking into account the uniform background thundercloud electric field and the time-varying electric field produced by the descending leader. All surfaces of the structure to be analyzed, and all "competing features" are at the ground potential.

k) The charge per unit length required to thermalize each upward leader segment is derived from a more detailed CSM analysis and is estimated as a function of the upward leader velocity.

l) The downward leader approaches the study object in a vertical (or inclined) path.

The following steps are required to apply the method:

a) For a study object, construct a numerical model (with CSM, FEM, or any other technique) to perform iterative electrostatic calculations considering the object together with the propagating descending and upward leaders.

b) Select a stroke current magnitude from the probability distribution for stroke currents and convert the stroke current to a leader charge based on Cooray's re-evaluation of the Berger data.

c) For different lateral displacements of the downward leader axis (relative to the study object), perform the transient simulation of the initiation and propagation of the upward leader according to SLIM. For each case, the analysis should be performed by updating at each time step the electrostatic calculation as the downward leader approaches to ground from the cloud base. From the obtained results, determine whether there was connection between the upward connecting leader and the descending leader or not.

d) The attraction distance is the maximum lateral distance from the downward leader to the study object at which the upward connecting leader reaches the downward leader.

e) Based on the calculated attraction distances for various study objects, locate the objects and analyze the design.

In summary, the authors of the SLIM state it is a straightforward numerical procedure for simulating leader development involving an iterative, geometrical analysis of the background potential distribution. This simplified procedure can be used for engineering purposes since it has been successfully implemented to simulate lightning attachment to complex structures (windmills and buildings). At the time of writing, the model has not yet been implemented to analyze shielding of substations against lightning strokes. However, research on further improvements to the model still continues.

Copyright © 2013 IEEE. All rights reserved.

Copyright The Institute of Electrical and Electronics Engineers, Inc.
Provided by IHS under license with IEEE
No reproduction or networking permitted without license from IHS

Order Number: 02120914
Sold to:EGAT [700166108393] - VARRIS.Y@EGAT.CO.TH,
Not for Resale,2016-09-15 03:57:48 UTC

7.2 Importance of air terminal geometry

The following comments relate to the use of vertical rod air terminations and slender masts for the shielding of substations against lightning strokes.

Research carried out over the last decade has shown that air terminal geometry is an important factor in the interception of a lightning stroke. As noted in A.4.6.2 of NFPA 780-2004, the field experiments of Moore, et al. [B97] suggest that the optimum tip radius of curvature of a vertical rod air terminal used for interception of lightning strikes is between 4.8 and 12.7 mm.

The rods used in the above study were mounted at a fixed height of about 6 m above the ground. In a numerical modeling study carried out using the results and concepts described in Moore, et al., D'Alessandro [B40] has shown that it is possible to compute the optimum tip radius of any lightning rod installed as a free-standing mast or on a structure of any given dimensions. The results of the study show that the optimum tip radius has a significant dependence on the rod length (height above ground) and, if installed on a structure, the dimensions of the structure. In general, the author claims that the additional electric field intensification created by mounting rods on masts and other structures, particularly when they are positioned near edges and corners of extended structures, means that the tip radii required for optimum effectiveness are larger than their counterparts on the ground surface.

7.3 Active lightning terminals

In the preceding methods described in Clauses 5 and 6, the lightning terminal is considered to be a passive element that intercepts the stroke merely by virtue of its position with respect to the energized bus or equipment. Suggestions have been made that lightning protection can be improved by using "active" lightning terminals. Three types of such devices have been proposed over the years:

a) Lightning rods with radioactive tips (Golde [B56]). These devices are said to extend the attractive range of the tip through ionization of the air.

b) Early streamer emission (ESE) lightning rods (Berger and Floret [B14]). These devices contain a triggering mechanism that sends high-voltage pulses to the tip of the rod whenever charged clouds appear over the site. This process is said to generate an upward streamer that extends the attractive range of the rod.

c) Lightning prevention devices. These devices enhance the point discharge phenomenon by using an array of needles instead of the single tip of the standard lightning rod. It is said that the space charge generated by the many needles of the array neutralize part of the charge in an approaching cloud and prevent a return stroke to the device, effectively extending the protected area (Carpenter [B27]).

Despite the use of the above three types of air terminals around the world, to date no scientific evidence has been provided that proves these systems are superior to conventional masts and wires or that they function as claimed by the manufacturers. For example:

— Radioactive lightning rods were banned in Europe many years ago because the resulting nuclear pollution was found to be unjustifiable by their minimal benefit. Also, they failed in field installations as was shown by Golde [B56].

— ESE lightning rods and the associated design method in NFC 17-102 have been criticized by the scientific community for more than a decade for a number of fundamental and technical flaws in their claimed mode of operation and use for shielding against lightning (Mackerras, Darveniza, and Liew [B92]).

Copyright © 2013 IEEE. All rights reserved.

Copyright The Institute of Electrical and Electronics Engineers, Inc.
Provided by IHS under license with IEEE
No reproduction or networking permitted without license from IHS

Order Number: 02120914
Sold to:EGAT [700166108393] - VARRIS.Y@EGAT.CO.TH,
Not for Resale,2016-09-15 03:57:48 UTC

— The worldwide scientific community has been unanimous in showing that it is not possible to prevent lightning strikes, despite claims by the proponents of such systems to the contrary (Mousa [B101]). The scientific consensus on lightning protection is that one needs to capture a lightning flash to a known point and then discharge the strokes into the ground safely. While state-of-the-art modeling is encouraging, the worldwide scientific community has not accepted that enhanced passive geometries demonstrate increases in striking distance by factors larger than the 20% ratio between masts and conductor striking distance suggested in this document.

Copyright © 2013 IEEE. All rights reserved.

Copyright The Institute of Electrical and Electronics Engineers, Inc.
Provided by IHS under license with IEEE
No reproduction or networking permitted without license from IHS

Order Number: 02120914
Sold to:EGAT [700166108393] - VARRIS.Y@EGAT.CO.TH,
Not for Resale,2016-09-15 03:57:48 UTC

Annex A

(informative)

Empirical shielding curves

The following pages contain empirical shielding curves referenced in the guide.

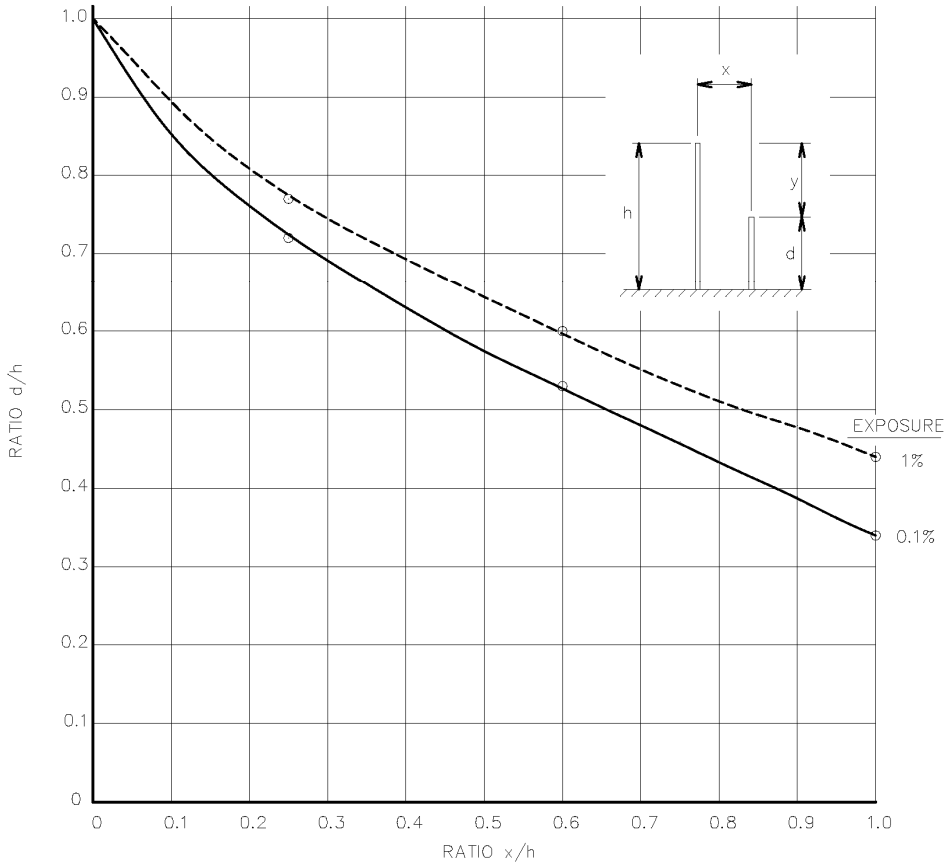

Figure A.1—Protection of an exposed object by a single lightning mast

Copyright © 2013 IEEE. All rights reserved.

Copyright The Institute of Electrical and Electronics Engineers, Inc.
Provided by IHS under license with IEEE
No reproduction or networking permitted without license from IHS

Order Number: 02120914
Sold to:EGAT [700166108393] - VARRIS.Y@EGAT.CO.TH,
Not for Resale,2016-09-15 03:57:48 UTC

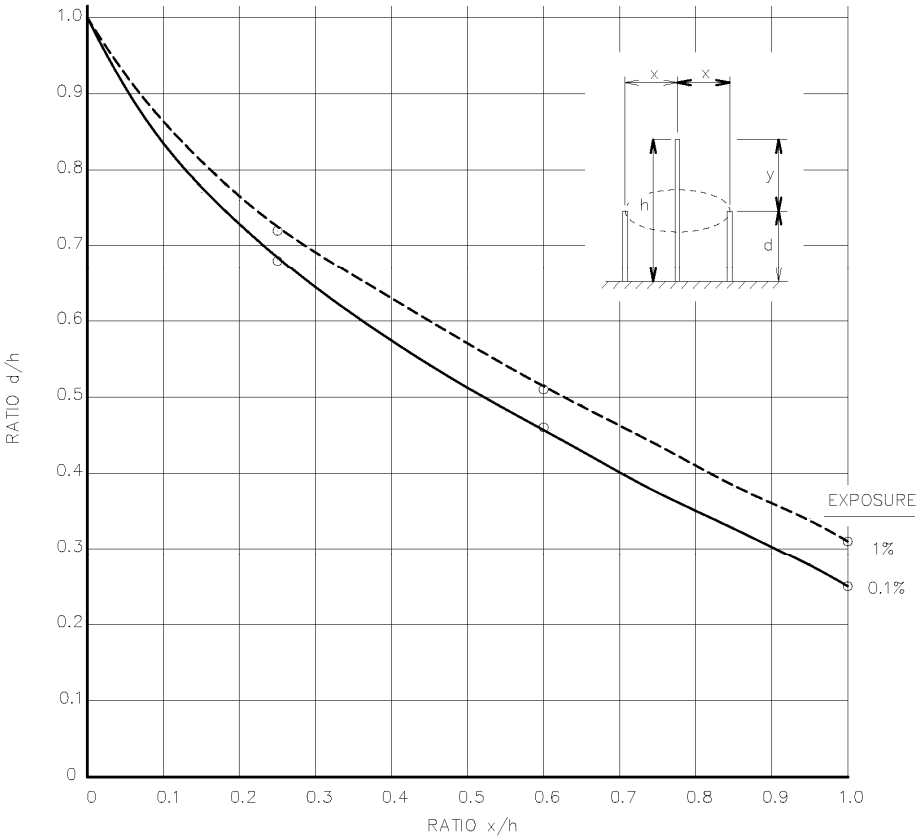

Figure A.2—Protection of a ring of exposed objects by a single lightning mast

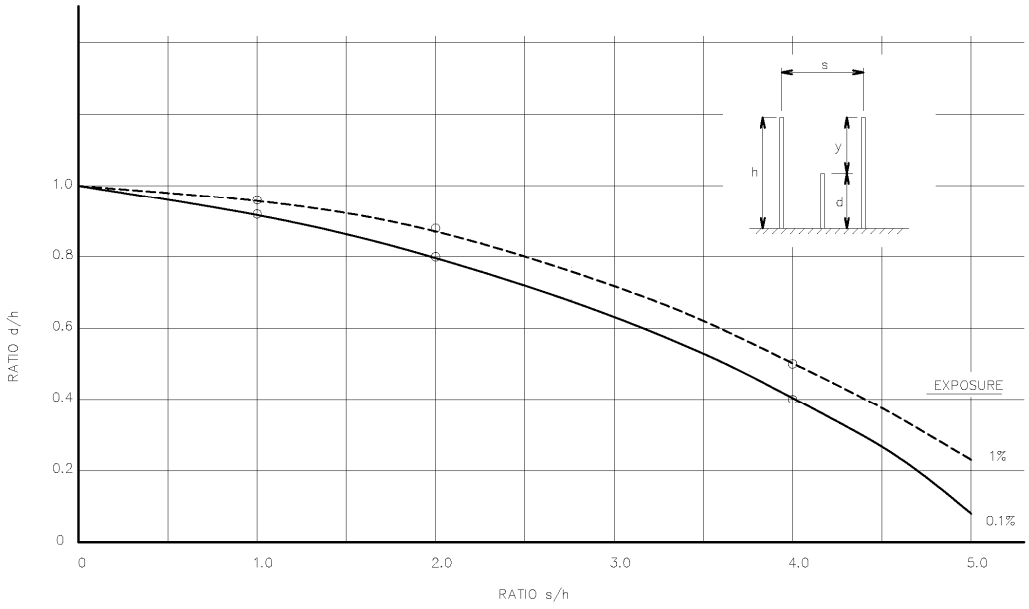

Figure A.3—Protection of an exposed object by two lightning masts. (Refer to Figure 19 for area of protection.)

Copyright © 2013 IEEE. All rights reserved.

Copyright The Institute of Electrical and Electronics Engineers, Inc.
Provided by IHS under license with IEEE
No reproduction or networking permitted without license from IHS

Order Number: 02120914
Sold to:EGAT [700166108393] - VARRIS.Y@EGAT.CO.TH,
Not for Resale,2016-09-15 03:57:48 UTC

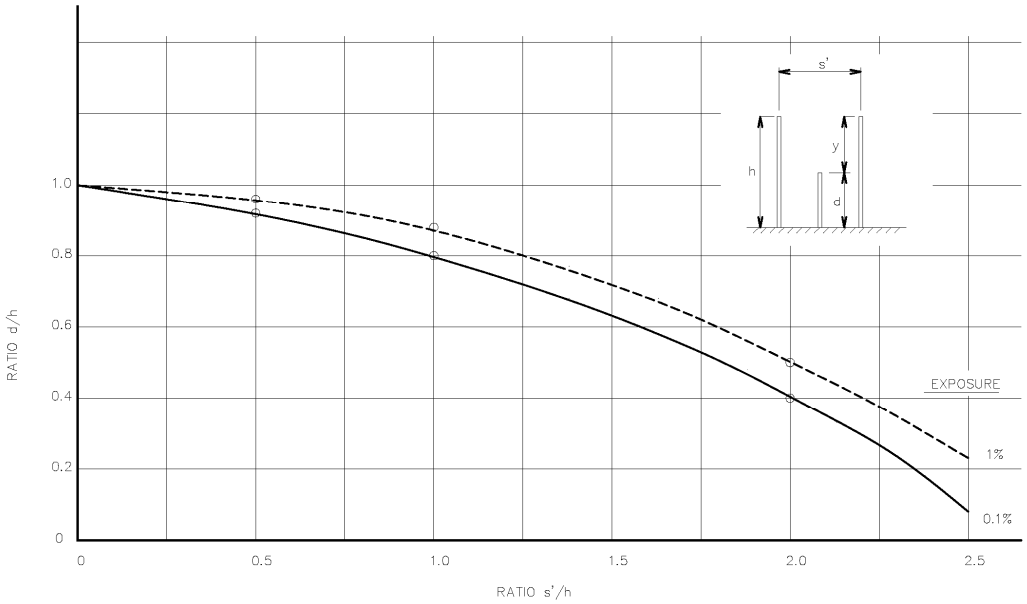

Figure A.4—Protection of an exposed object by two lightning masts. (Refer to Figure 20 for area of protection.)

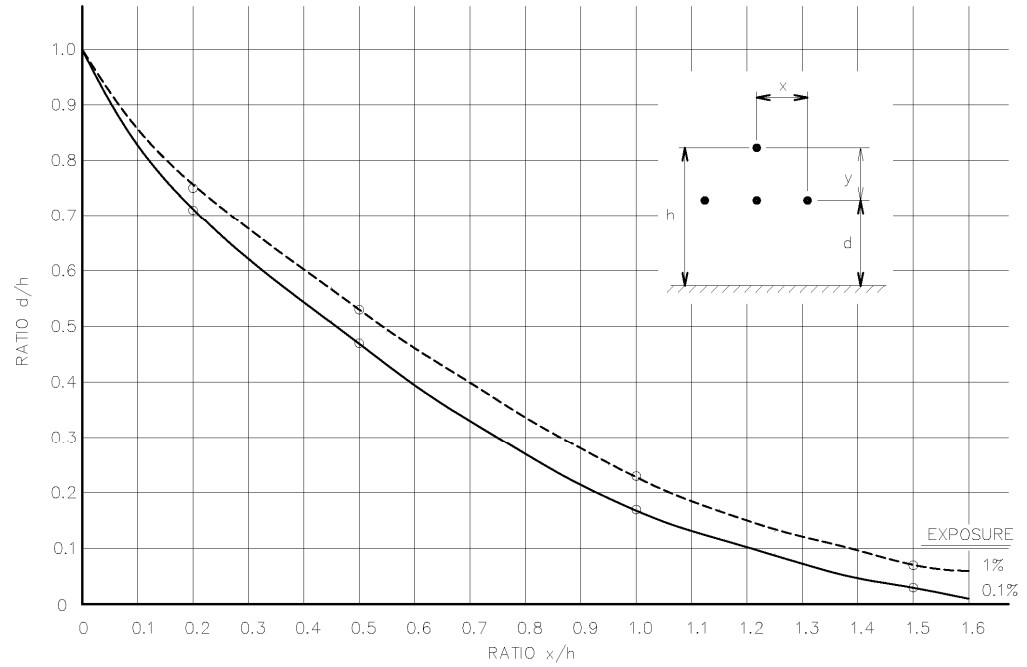

Figure A.5—Protection of exposed horizontal conductors by a single shield wire

Copyright © 2013 IEEE. All rights reserved.

Copyright The Institute of Electrical and Electronics Engineers, Inc.
Provided by IHS under license with IEEE
No reproduction or networking permitted without license from IHS

Order Number: 02120914
Sold to:EGAT [700166108393] - VARRIS.Y@EGAT.CO.TH,
Not for Resale,2016-09-15 03:57:48 UTC

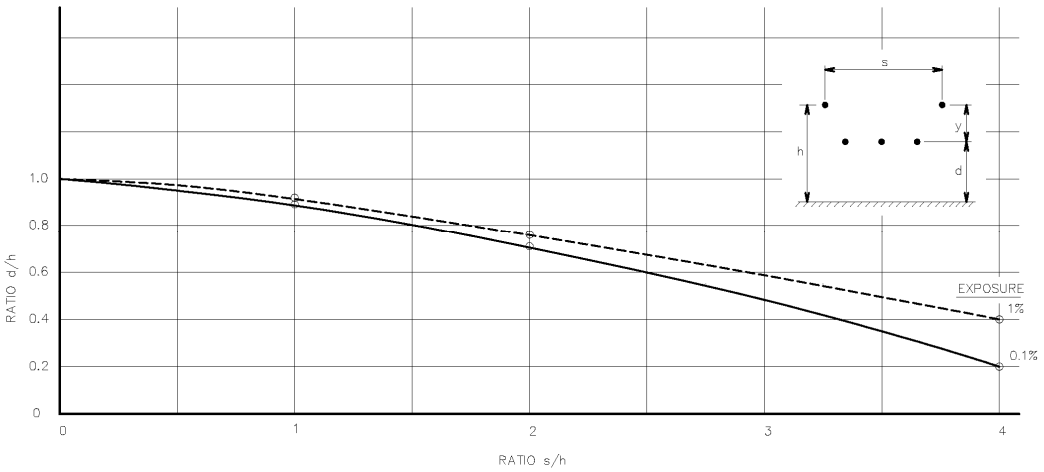

Figure A.6—Protection of exposed horizontal conductors by two shield wires

Copyright © 2013 IEEE. All rights reserved.

Copyright The Institute of Electrical and Electronics Engineers, Inc.
Provided by IHS under license with IEEE
No reproduction or networking permitted without license from IHS

Order Number: 02120914
Sold to:EGAT [700166108393] - VARRIS.Y@EGAT.CO.TH,
Not for Resale,2016-09-15 03:57:48 UTC

Annex B

(informative)

Sample calculations

B.1 Introduction

Annex B provides calculations, equations, figures, and computations based on common designer evaluations of the methods and models discussed in this guide. These are provided for reference use only. Users of Annex B are responsible for determining and complying with appropriate safety, security, environmental, health and welfare laws, regulatory requirements, and practices applicable to their location, systems, equipment, and operations.

This annex will illustrate the application of lightning shielding to actual substations. The methods presented in the guide will be illustrated for two substations, a 69 kV substation and a 500 kV to 230 kV step-down station. The 69 kV substation will be assumed to be single voltage station with the secondary bus in a protected enclosure. The 500/230 kV station will illustrate how to handle multiple voltage levels when using the electrogeometric model.

B.2 illustrates the use of the fixed angle for the two stations. B.3 illustrates the use of empirical curves (Wagner's method). B.4 illustrates the application of the electrogeometric theory by a computer program, and B.5 illustrates the application of the electrogeometric theory by the rolling sphere method. Data on bus heights, diameters, and basic impulse design levels are given in Table B.1 and Table B.2 in order to allow the user to follow the calculations. The layouts of the substations to be protected are given in Figure B.1 and Figure B.2. Following the sample calculations is a discussion comparing the results of the methods.

Table B.1—Data for 69 kV substation

Electrical data	Bus data	Height, m (ft)	Diameter mm (in)
Nom. volt., 69 kV	Bus A	4.27 (14)	114.30 (4.5)
Bus BIL, 350 kV	Bus B	5.79 (19)	114.30 (4.5)
Equip. BIL, 350 kV	Bus C	10.06 (33)	25.40 (1.0)

Copyright © 2013 IEEE. All rights reserved.

Copyright The Institute of Electrical and Electronics Engineers, Inc.
Provided by IHS under license with IEEE
No reproduction or networking permitted without license from IHS

Order Number: 02120914
Sold to:EGAT [700166108393] - VARRIS.Y@EGAT.CO.TH,
Not for Resale,2016-09-15 03:57:48 UTC

Table B.2—Data for 500/230 kV substation

Electrical data					
500 kV section			**230 kV section**		
Nom. volt.: 500 kV			Nom. volt.: 230 kV		
Bus BIL: 1800 kV			Bus BIL: 900 kV		
Equip. BIL: 1800 kV			Equip. BIL: 900 kV		
Ph-Gnd C1: 4572 mm (15 ft)			Ph-Gnd Cl.: 1803 mm (5.92 ft)		
Bus data					
500 kV section			**230 kV section**		
Bus	**Height, m (ft)**	**Dia., mm (in)**	**Bus**	**Height, m (ft)**	**Dia., mm (in)**
A	16.76 (55)	114.30 (4.5)	A	8.53 (28)	135.00 (5.5)
B	9.14 (30)	114.30 (4.5)	B	6.10 (20)	135.00 (5.5)
			C	11.89 (39)	135.00 (5.5)

To help provide for comparability of the results of the different shielding design methods, the following criteria were adopted:

a) Maximum height of mast or shield wire support point = 30.48 m (100 ft)

b) Maximum span of shield wires = 182.9 m (600 ft)

c) No more than four shield wires are to be connected to a support structure

Copyright © 2013 IEEE. All rights reserved.

Copyright The Institute of Electrical and Electronics Engineers, Inc.
Provided by IHS under license with IEEE
No reproduction or networking permitted without license from IHS

Order Number: 02120914
Sold to:EGAT [700166108393] - VARRIS.Y@EGAT.CO.TH,
Not for Resale,2016-09-15 03:57:48 UTC

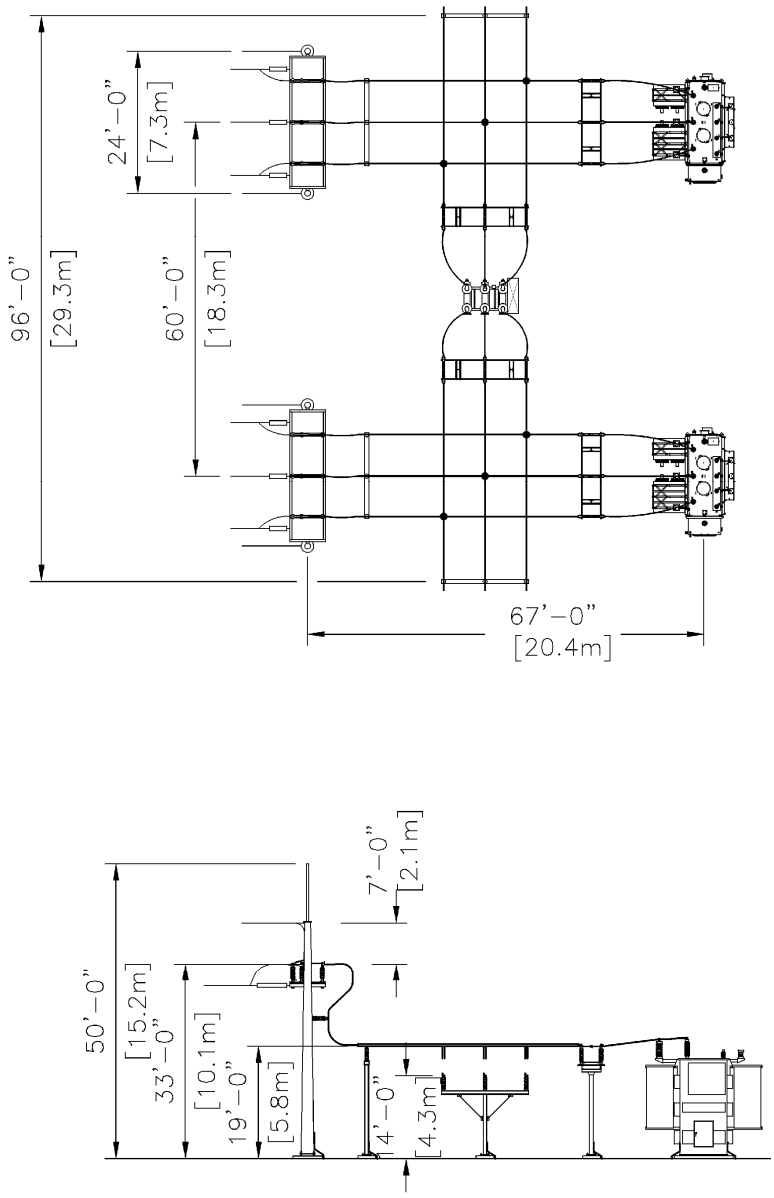

Figure B.1—Typical 69 kV substation layout for sample calculations

Copyright © 2013 IEEE. All rights reserved.

--`,,,,,,`,```,,`,`,,,`,-`-`,,`,,`,`,,`---

Copyright The Institute of Electrical and Electronics Engineers, Inc.
Provided by IHS under license with IEEE
No reproduction or networking permitted without license from IHS

Order Number: 02120914
Sold to:EGAT [700166108393] - VARRIS.Y@EGAT.CO.TH,
Not for Resale,2016-09-15 03:57:48 UTC

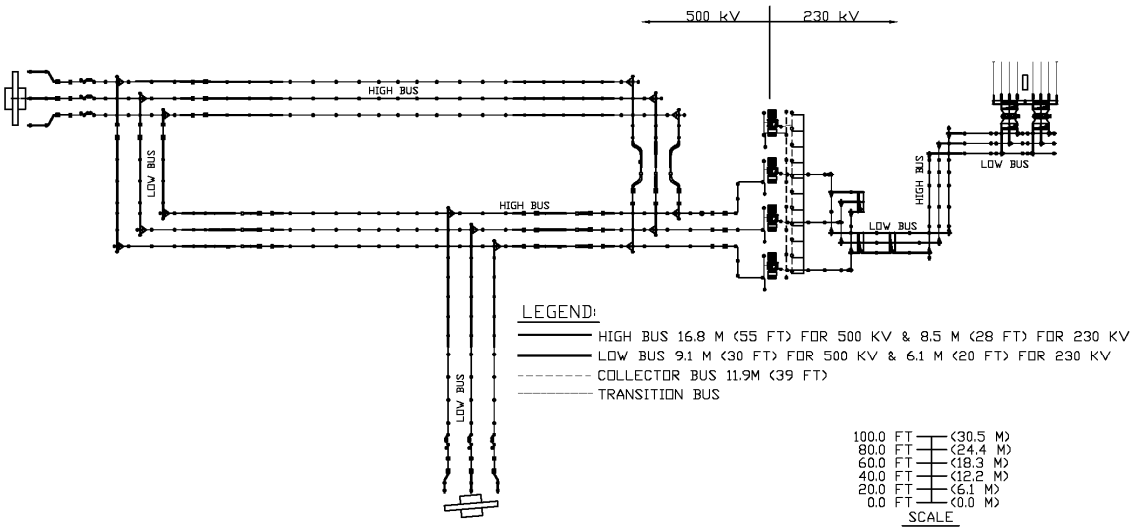

Figure B.2—Typical 500/230 kV substation layout for sample calculations

B.2 Fixed-angle method

B.2.1 Application to 69 kV substation

B.2.1.1 Static mast(s) only

The fixed-angle method of lightning shielding is a combination of analytical and geometric analysis. The first step is to determine the protective level required. For this substation, a 45 degree protective angle is desired and will be used for both α and β. The maximum mast height allowed is 21.34 m (70 ft).

Once the design criteria are established, the next step is to determine the areas of protection. Since the terminal structures are 15.24 m (50 ft) tall with masts at the top, we determine the area of protection provided by the terminal structures before adding any additional masts. Referring to Figure 12 and Table B.3 we calculate the area of protection (X) using the following equation:

$$X = (h\text{-}d)\ \mathrm{TAN}\beta \qquad \text{(B.1)}$$

Table B.3—Radii of protection (X) in m (ft)

Variable	Description		Radius of protection X	Radius of protection X	Radius of protection X
h	Height of the mast		15.24 m (50 ft)	18.29 m (60 ft)	21.34 m (70 ft)
α	Protective angle	45 degrees			
d	Height of bus or equipment	4.27 m (14 ft)	10.97 m (36 ft)	14.02 m (46 ft)	17.07 m (56 ft)
d	Height of bus or equipment	5.79 m (19 ft)	9.45 m (31 ft)	12.50 m (41 ft)	15.54 m (51 ft)
d	Height of bus or equipment	10.06 m (33 ft)	5.18 m (17 ft)	8.23 m (27 ft)	11.28 m (37 ft)

Copyright © 2013 IEEE. All rights reserved.
Copyright The Institute of Electrical and Electronics Engineers, Inc.
Provided by IHS under license with IEEE
No reproduction or networking permitted without license from IHS
Order Number: 02120914
Sold to:EGAT [700166108393] - VARRIS.Y@EGAT.CO.TH,
Not for Resale,2016-09-15 03:57:48 UTC

Referring to Figure B.1, since the terminal legs are spaced 7.32 m (24 ft) apart, and the area of protection for the 10.06 m (33 ft) bus is 5.18 m (17 ft), the 10.06 m (33 ft) bus is protected with the masts on the terminal structure. The terminal structure masts provide a ring of protection of 9.45 m (31 ft) for the 5.79 m (19 ft) bus height which has been sketched in Figure B.3. This ring of protection provides protection for part of the 69 kV bus.

The next step is to evaluate what is not protected. The transformers and 69 kV high bus remain unshielded. Next, install a single mast in the center of the substation. A mast tall enough to protect the area of 5.79 m (19 ft) high bus approximately 11.28 m (37 ft) from the centerline of the new mast is required. Referring to Table B.3, to protect this area, we would need to install a 21.34 m (70 ft) tall mast.

Finally, optimize the mast location to provide bus protection and overlap with the existing terminal tower masts. Referring to Figure B.3, locating the lightning mast 8.54 m (28 ft) east of the main bus completes the design.

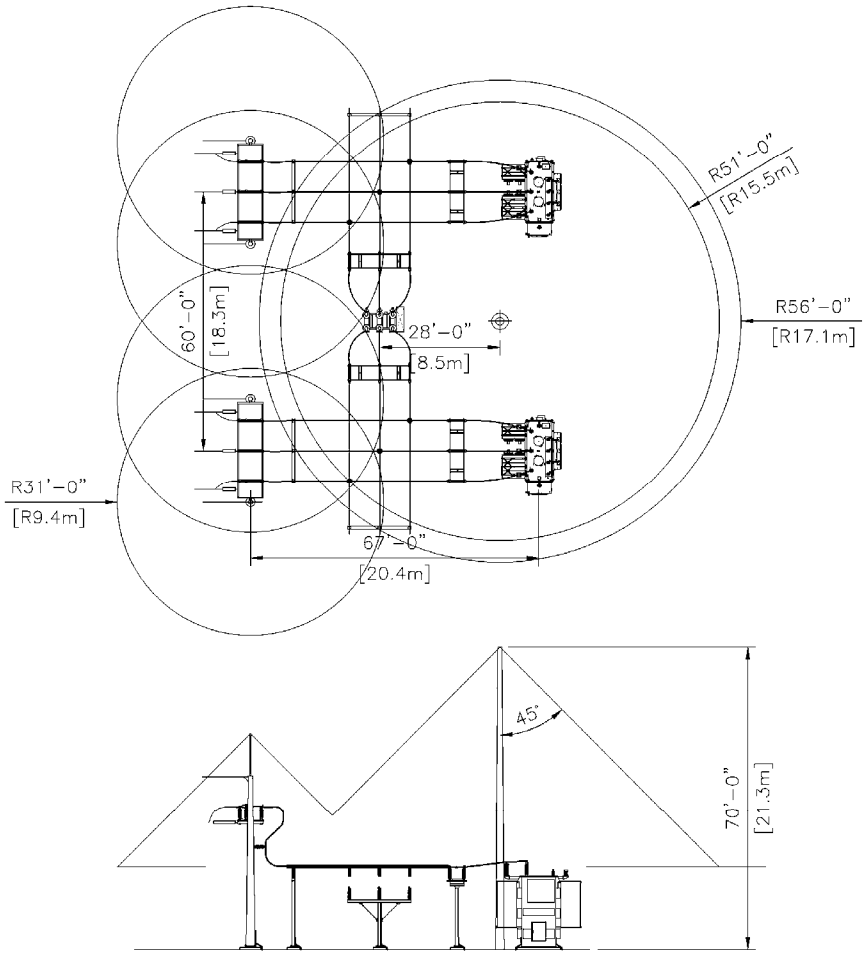

Figure B.3—Shielding a 69 kV substation with masts using fixed-angle method

Copyright © 2013 IEEE. All rights reserved.

Copyright The Institute of Electrical and Electronics Engineers, Inc.
Provided by IHS under license with IEEE
No reproduction or networking permitted without license from IHS

Order Number: 02120914
Sold to:EGAT [700166108393] - VARRIS.Y@EGAT.CO.TH,
Not for Resale,2016-09-15 03:57:48 UTC

B.2.1.2 Masts and wire

In B.2.1.1, the substation was protected with the 15.24 m (50 ft) terminal tower masts plus one additional 21.34 m (70 ft) lightning mast. The shielding design was based on a 45 degree protection angle. If the user wanted to reduce the protection angle, but not add any additional lightning masts, this could be accomplished by adding shield wires and relocating the mast to maximize the shielding protection.

Utilizing a protection angle of 30 degrees, we can calculate the areas of protection zone for protection heights of masts or wires for 15.24 m (50 ft), 18.29 m (60 ft), and 21.34 m (70 ft) (refer to Table B.4) utilizing Equation B.1. An 18.29 m (60 ft) mast is chosen.

Table B.4—Area of protection (X)

Variable	Description		Area of protection *X*	Area of protection *X*	Area of protection *X*
h	Height of mast/ shield wire		15.24 m (50 ft)	18.29 m (60 ft)	21.34 m (70 ft)
α	Protective angle	30 degrees			
d	Height of bus or equipment	4.27 m (14 ft)	6.34 m (20 ft 9 in)	8.09 m (26 ft 7 in)	9.85 m (32 ft 4 in)
d	Height of bus or equipment	5.79 m (19 ft)	5.46 m (17 ft 11 in)	7.21 m (23 ft 8 in)	8.97 m (29 ft 5 in)
d	Height of bus or equipment	10.06 m (33 ft)	2.99 m (9 ft 10 in)	4.75 m (15 ft 7 in)	6.51 m (21 ft 4 in)

Next, draw in the protection circles for the masts and draw in a shield wire between the masts (refer to Figure B.4. It is noted that the shield wire will have some sag that is dependent on the tension of the wire. Considering that this is an approximation method, the sag is ignored for the figure's protection zone.

As you will note from Figure B.4, a portion of the 4.27 m (14 ft) bus height including the circuit breaker is not in the protected area. The solution would be to add another static mast, or increase the angle of protection, α. Increasing the angle of protection would be an acceptable option since the area in question is between two static wires and typical design practices allow for a larger shield angle.

Using the same equation as before, solve for α knowing that X = 9.15 m (30 ft), h = 16.77 m (55 ft), and d = 4.27 m (14 ft). Using 16.77 m (55 ft) as the approximate shield wire height at the midpoint, the angle α is calculated to be 36 degrees. While this exceeds the desired protective angle of 30 degrees, it is an improvement from Figure B.3 protective angle of 45 degrees. Also, since this breaker is located between two shield wires and several masts, it might be appropriate to consider a larger protective angle as explained previously in the text.

Copyright © 2013 IEEE. All rights reserved.

Copyright The Institute of Electrical and Electronics Engineers, Inc.
Provided by IHS under license with IEEE
No reproduction or networking permitted without license from IHS

Order Number: 02120914
Sold to:EGAT [700166108393] - VARRIS.Y@EGAT.CO.TH,
Not for Resale,2016-09-15 03:57:48 UTC

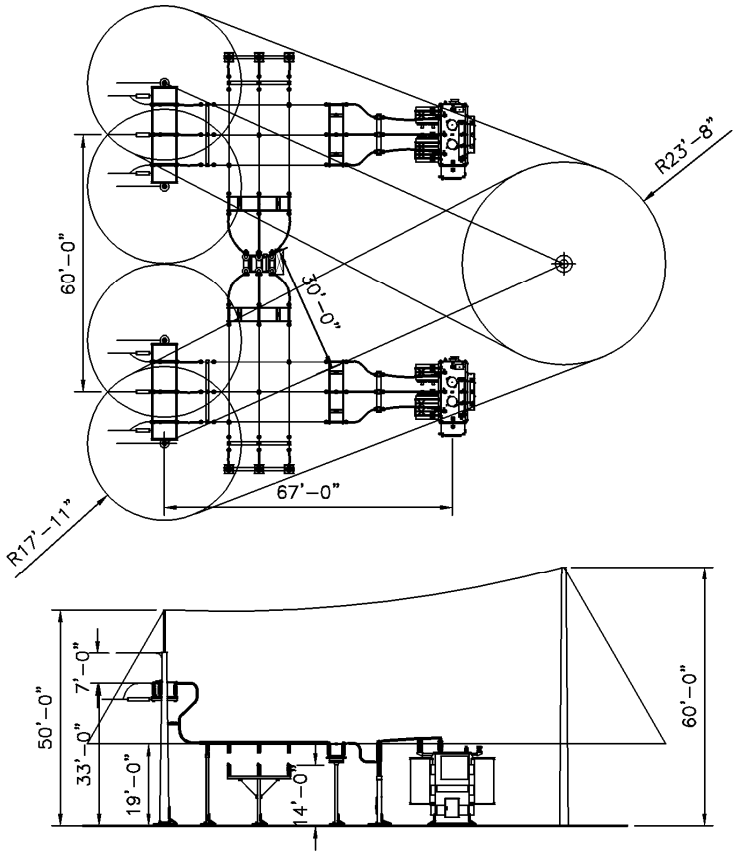

Figure B.4—Shielding a 69 kV substation with static wires using fixed-angle method

B.2.2 Fixed-angle method for a 500/230 kV substation

Applying the same method as used in the previous clause for the 69 kV substation produces the results shown in Figure B.5, Figure B.6, Figure B.7, and Figure B.8 for a 500/230 kV substation. A shield angle of 60 degrees for alpha and 45 degrees for beta was used for the 230 kV section. An angle of 45 degrees was used for both alpha and beta for the 500 kV section.

Copyright © 2013 IEEE. All rights reserved.

Copyright The Institute of Electrical and Electronics Engineers, Inc.
Provided by IHS under license with IEEE
No reproduction or networking permitted without license from IHS

Order Number: 02120914
Sold to:EGAT [700166108393] - VARRIS.Y@EGAT.CO.TH,
Not for Resale,2016-09-15 03:57:48 UTC

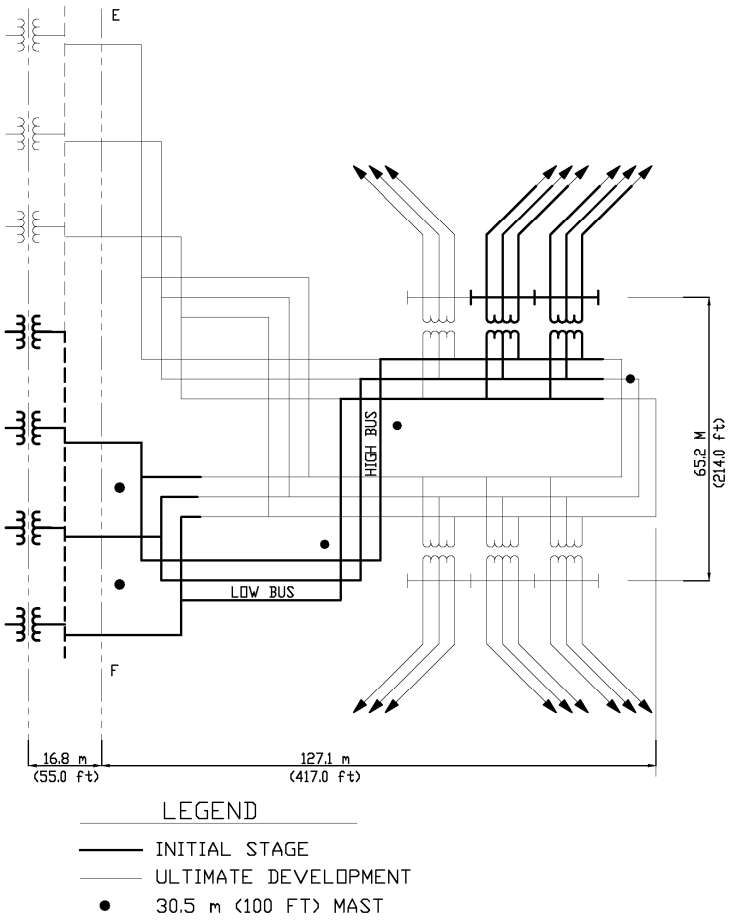

Figure B.5—Shielding a 230 kV substation with masts using fixed-angle method

Copyright © 2013 IEEE. All rights reserved.

Copyright The Institute of Electrical and Electronics Engineers, Inc.
Provided by IHS under license with IEEE
No reproduction or networking permitted without license from IHS

Order Number: 02120914
Sold to:EGAT [700166108393] - VARRIS.Y@EGAT.CO.TH,
Not for Resale,2016-09-15 03:57:48 UTC

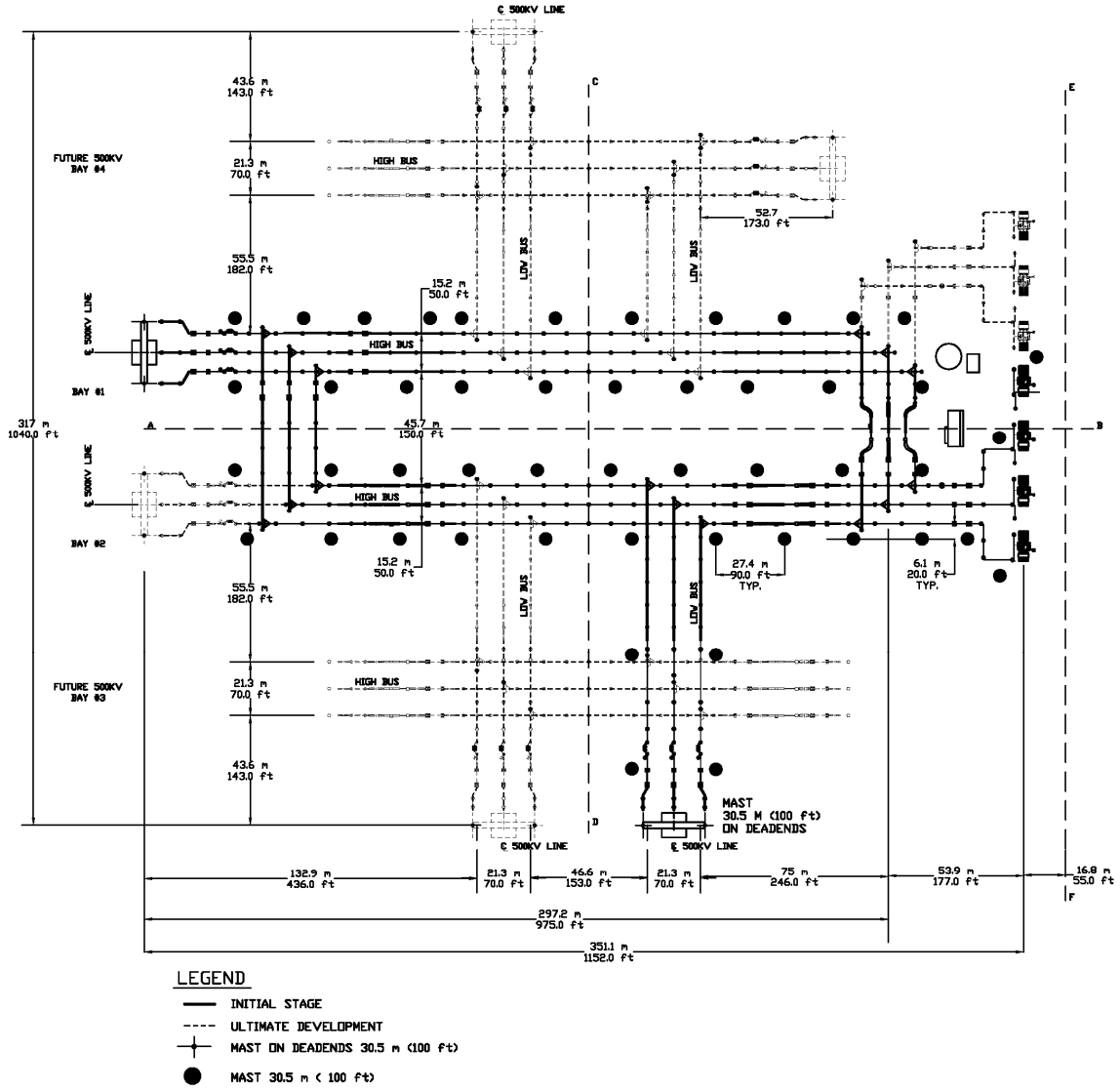

Figure B.6—Shielding a 500 kV substation with masts using fixed-angle method

Copyright © 2013 IEEE. All rights reserved.

Copyright The Institute of Electrical and Electronics Engineers, Inc.
Provided by IHS under license with IEEE
No reproduction or networking permitted without license from IHS

Order Number: 02120914
Sold to:EGAT [700166108393] - VARRIS.Y@EGAT.CO.TH,
Not for Resale,2016-09-15 03:57:48 UTC

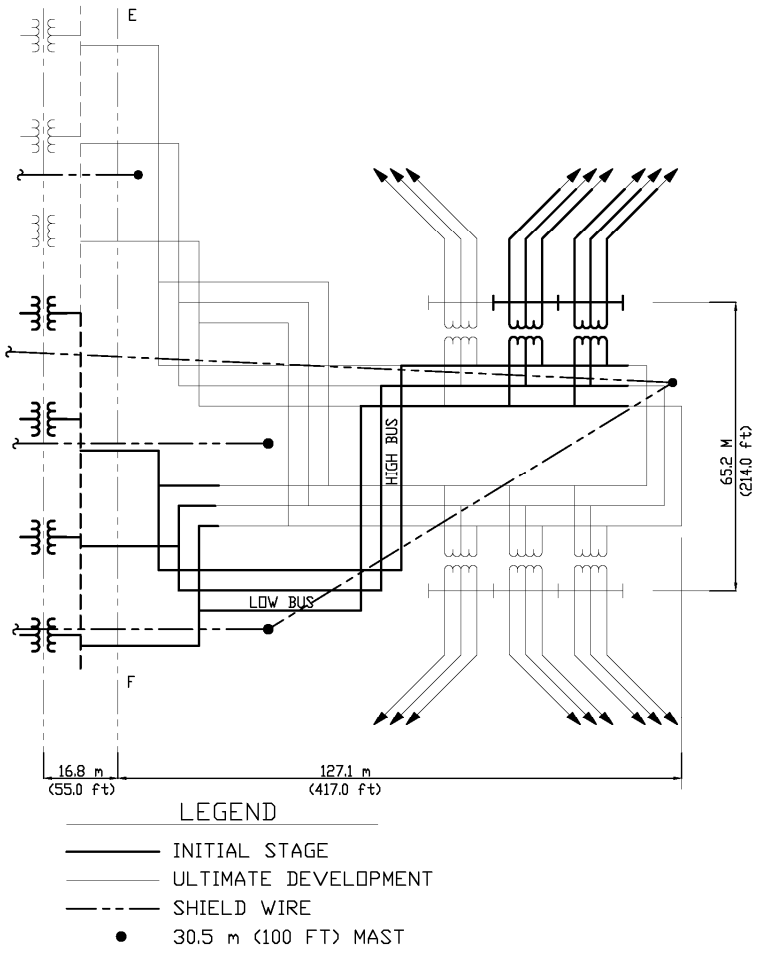

Figure B.7—Shielding a 230 kV substation with shield wires using fixed-angle method

Copyright © 2013 IEEE. All rights reserved.

Copyright The Institute of Electrical and Electronics Engineers, Inc.
Provided by IHS under license with IEEE
No reproduction or networking permitted without license from IHS

Order Number: 02120914
Sold to:EGAT [700166108393] - VARRIS.Y@EGAT.CO.TH,
Not for Resale,2016-09-15 03:57:48 UTC

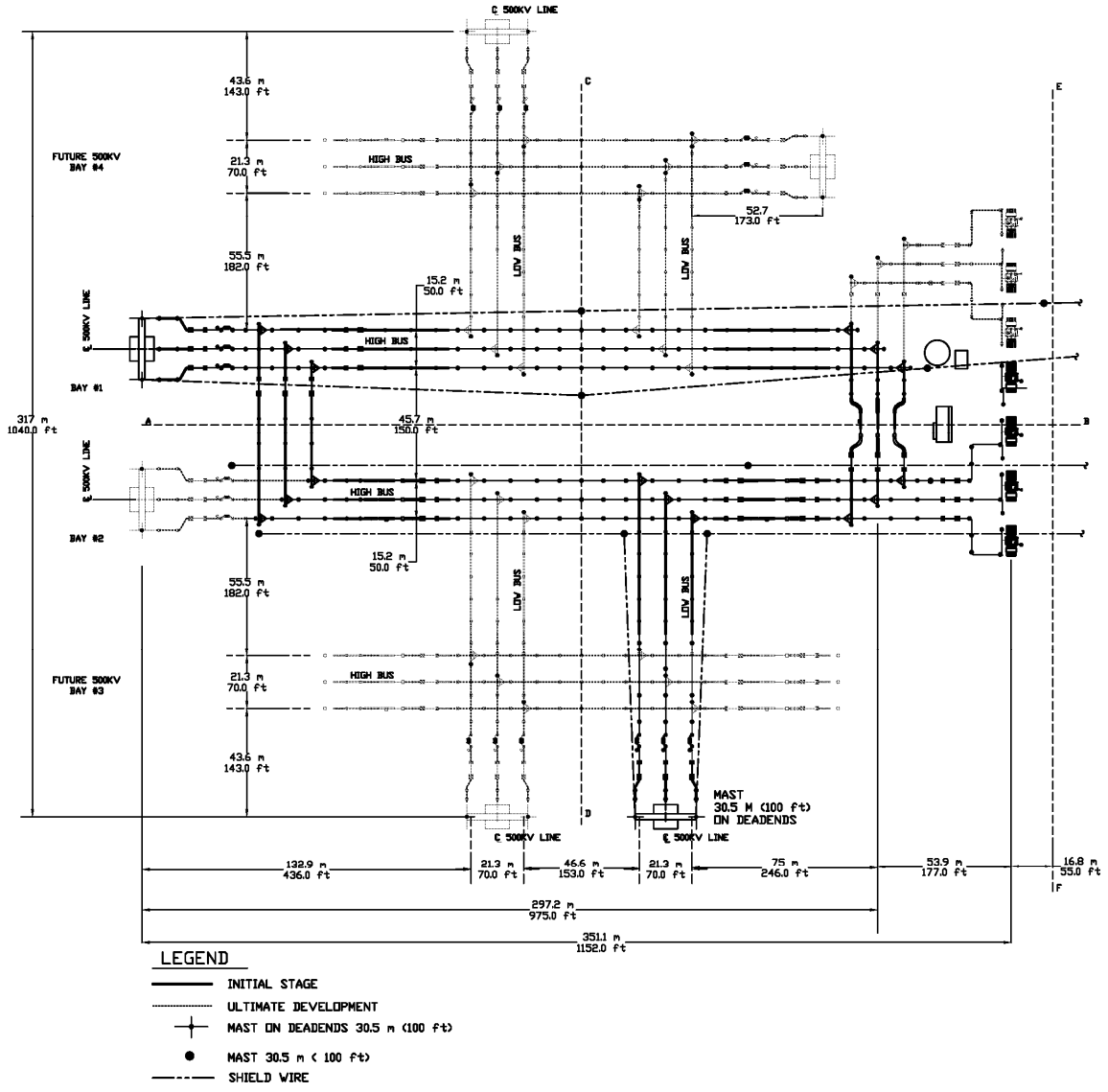

Figure B.8—Shielding a 500 kV substation with shield wires using fixed-angle method

B.3 Empirical method

B.3.1 Empirical method for a 69 kV substation, masts only

The first step is to determine the exposure criteria. In this example, an exposure level of 0.1% is selected (see Figure B.9). Note, for simplicity, this example determines the area of protection for the 5.8 m (19 ft) bus only. Similar use of the empirical curves could be completed for the 4.3 m (14 ft) and 10.1 m (33 ft) bus heights.

Once the exposure level is selected, the next step is to determine the areas of protection. Since the terminal structures have a 15.2 m (50 ft) mast, determine the area of protection provided by the masts before adding any additional masts. To shield the 5.8 m (19 ft) bus height use a *d* value of 6.1 m (20 ft) with a 15.2 m

Copyright © 2013 IEEE. All rights reserved.

Copyright The Institute of Electrical and Electronics Engineers, Inc.
Provided by IHS under license with IEEE
No reproduction or networking permitted without license from IHS

Order Number: 02120914
Sold to:EGAT [700166108393] - VARRIS.Y@EGAT.CO.TH,
Not for Resale,2016-09-15 03:57:48 UTC

(50 ft) tall mast (or masts) (refer to Figure B.9 derived from Figure 14). With a mast height h = 15.2 m (50 ft), y = 9.1 m (30 ft). Using the y value of 9.1 m (30 ft), move horizontally to a value of d = 6.1 m (20 ft). Project vertically downward to determine the maximum protective radius x = 10.67 m (35 ft).

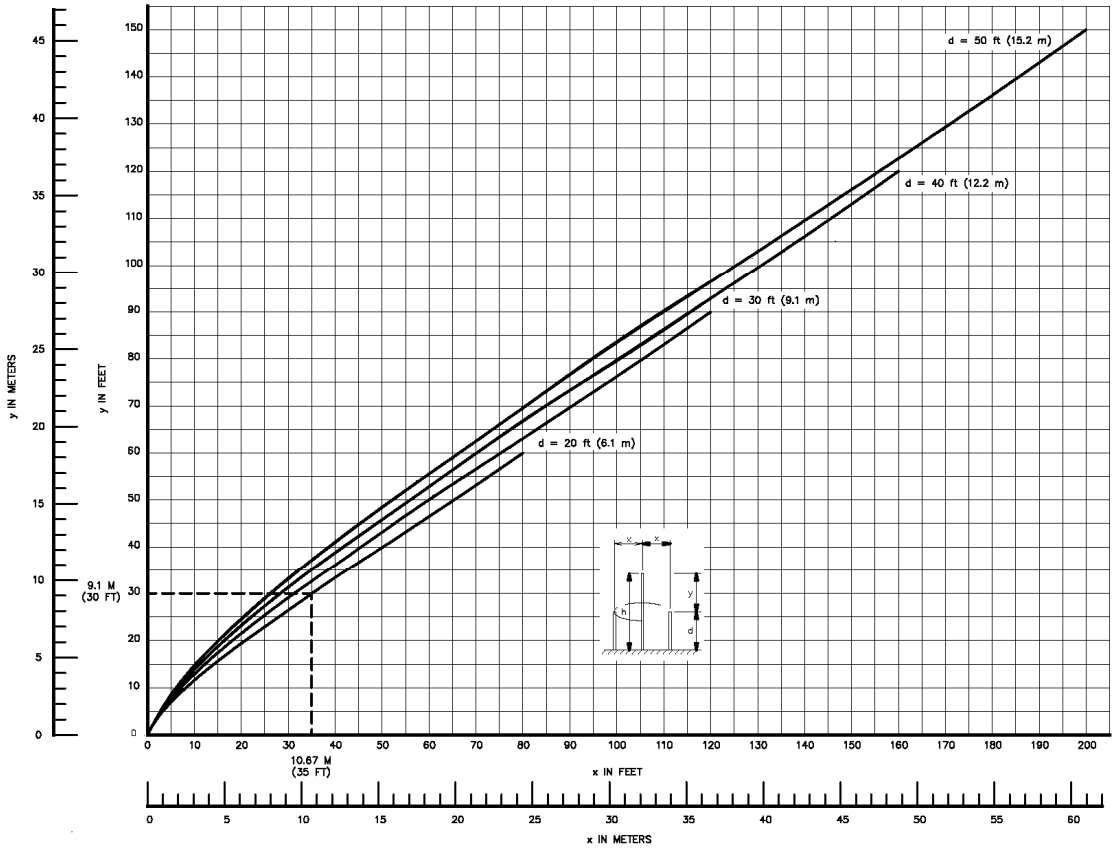

Figure B.9—Single lightning mast protecting single ring of objects—0.1% exposure. Height of lightning mast above protected object, *y*, as a function of horizontal separation, *x*, and height of protected object, *d*.

NOTE—A mast protecting a single object can protect an object 13.42 m (44 ft) away (see Figure 13), while that same mast protecting a ring of objects can protect a ring of 10.67 m (35 ft) radius. This apparent contradiction can be attributed to the original paper's hypothesis that the probability of a stroke to any one object in the ring of objects is higher than the probability of a stroke to one protected point. The conservative approach would be to shield a ring of protective objects.

Next, draw the 10.67 m (35 ft) protection circles for the terminal structures on the drawing (refer to Figure B.10).

The next step is to evaluate what is not protected. The transformers and 69 kV high bus remain unshielded. Install a single mast in the center of the substation. From the fixed-angle method, we know that the outside of the high bus is 11.3 m (37 ft) from the centerline of the substation. Using Figure B.9 with d = 6.1 m (20 ft), and x = 11.3 m (37 ft), we determine that y = 9.8 m (32 ft)—which results in a mast height of h = 15.9 m (52 ft). Considering that this mast height only provides the desired protection if the bus is perpendicular to the mast, round up the mast height to 18.3 m (60 ft). Using the same figure with an h = 18.3 m (60 ft), d = 6.1 m (20 ft), and y = 12.2 m (40 ft), the distance of coverage is determined to be

Copyright © 2013 IEEE. All rights reserved.

Copyright The Institute of Electrical and Electronics Engineers, Inc.
Provided by IHS under license with IEEE
No reproduction or networking permitted without license from IHS

Order Number: 02120914
Sold to:EGAT [700166108393] - VARRIS.Y@EGAT.CO.TH,
Not for Resale,2016-09-15 03:57:48 UTC

x = 15.2 m (50 ft). Draw the 15.2 m (50 ft) protection circle around the mast and locate the mast to optimize bus protection. The protection area can be seen in Figure B.10.

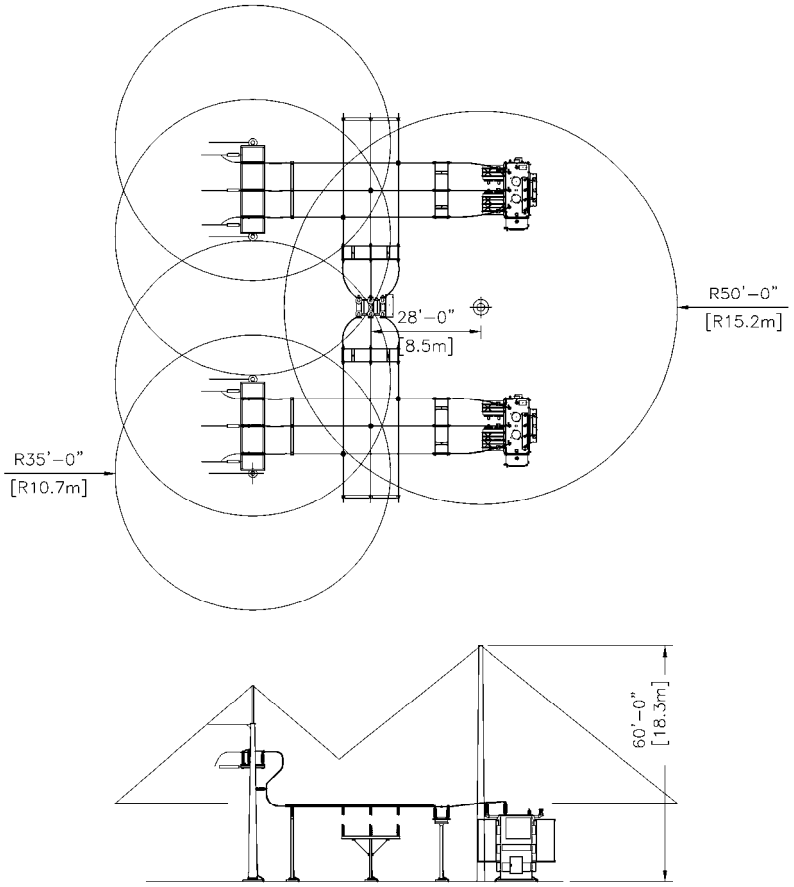

Figure B.10—Shielding a 69 kV substation with masts using empirical method

B.3.2 Empirical method for a 500/230 kV substation

The steps that need to be taken are similar to the previous example:

a) Determine bus and/or equipment heights to be shielded.

b) Determine existing mast and/or shield wire heights.

c) Using the empirical data, determine the coverage provided by the masts and/or shield wires for the specified heights.

B.3.2.1 Example of protection by mast

To shield the 16.8 m (55 ft) high bus with 30.5 m (100 ft) masts, enter Figure B.11 (using a y value of 13.7 m (45 ft) from $h - d$ = 30.5 m – 16.8 m (100 ft − 55 ft). Move horizontally to a value for d = 16.8 m (55 ft) by interpolating. Project vertically to determine the maximum value for s = 103 m (338 ft). Next enter Figure B.12 with value of y = 13.7 m (45 ft) from $h - d$ = 30.5 m – 16.8 m (100 ft − 55 ft). Move horizontally to a value for d = 30.5 m (55 ft) by interpolating. Project vertically to determine the maximum

Copyright © 2013 IEEE. All rights reserved.

Copyright The Institute of Electrical and Electronics Engineers, Inc.
Provided by IHS under license with IEEE
No reproduction or networking permitted without license from IHS

Order Number: 02120914
Sold to:EGAT [700166108393] - VARRIS.Y@EGAT.CO.TH,
Not for Resale,2016-09-15 03:57:48 UTC

radius x = 16.5 m (54 ft). Thus two 30.5 m (100 ft) masts separated by no more than 103 m (338 ft) will provide protection for an area as described in Figure B.10, and a single mast will protect an area about the mast with a 16.5 m (54 ft) radius at a 16.8 m (55 ft) bus height.

To shield the 8.5 (28 ft) high bus with 18.3 m (60 ft) masts, enter Figure B.11 using a y value of 9.8 m (32 ft) from ($h - d$ = 18.3 m – 8.5 m (60 ft − 28 ft). Move horizontally to a value for d = 8.5 m (28 ft) by interpolating. Project vertically to determine the maximum value for s = 68.6 m (225 ft). Next enter figure Figure B.12 with value of y = 9.8 m (32 ft) from $h - d$ = 18.3 m – 8.5 m (60 ft − 28 ft). Move horizontally to a value for d = 8.5 m (28 ft) by interpolating. Project vertically to determine the maximum radius x = 13.4 m (44 ft).

As described in 5.4 and shown in Figure 19, the maximum values for mast separation, *s,* is reduced to provide constant exposure design (0.1%) to the area between the masts. For this example, reduce the maximum s by half. The value of s for the 16.8 m (55 ft) bus would be approximately 51.8 m (170 ft), and for the 8.5 m (28 ft) bus s would be approximately 34.4 m (113 ft). The resulting layout using these mast separations for shielding is shown in Figure B.13 and Figure B.14.

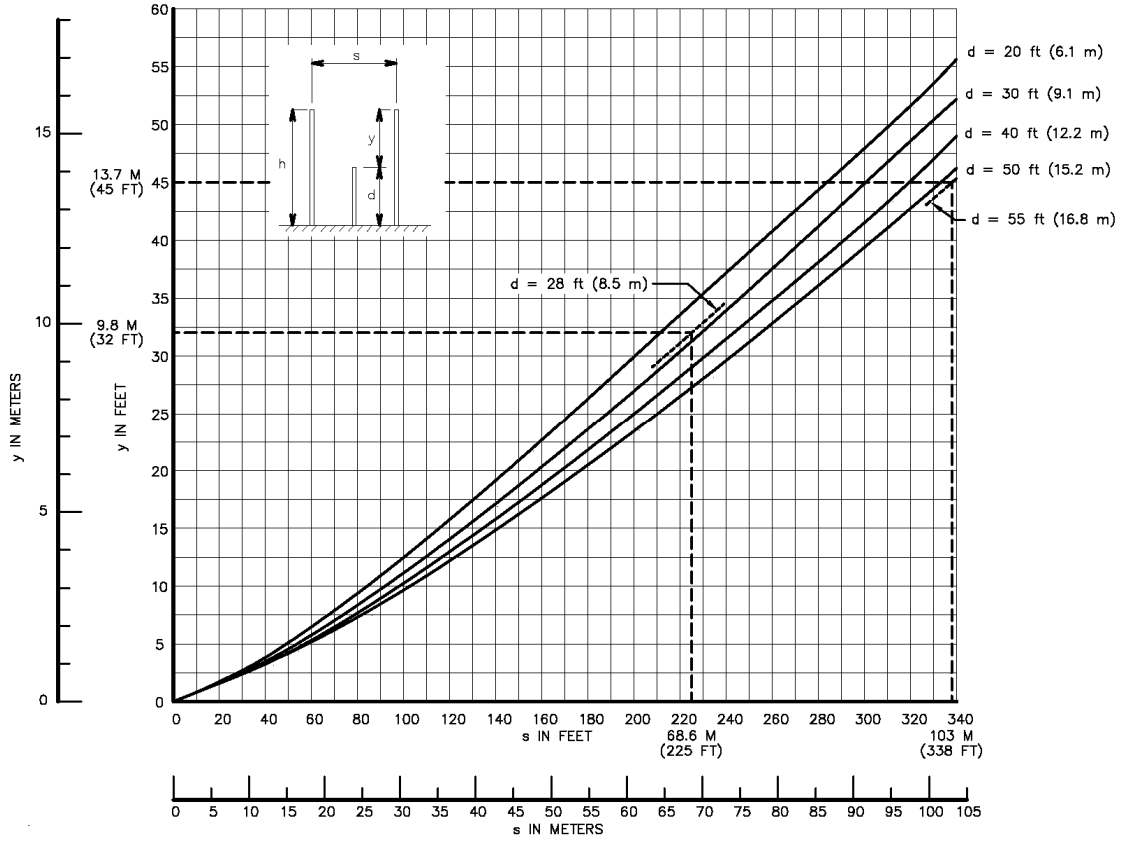

Figure B.11—Two lightning masts protecting single object, no overlap—0.1% exposure. Height of mast above protected object, *y*, as a function of horizontal separation, *s*, and height of protected object, *d*.

Copyright © 2013 IEEE. All rights reserved.

Copyright The Institute of Electrical and Electronics Engineers, Inc.
Provided by IHS under license with IEEE
No reproduction or networking permitted without license from IHS

Order Number: 02120914
Sold to:EGAT [700166108393] - VARRIS.Y@EGAT.CO.TH,
Not for Resale,2016-09-15 03:57:48 UTC

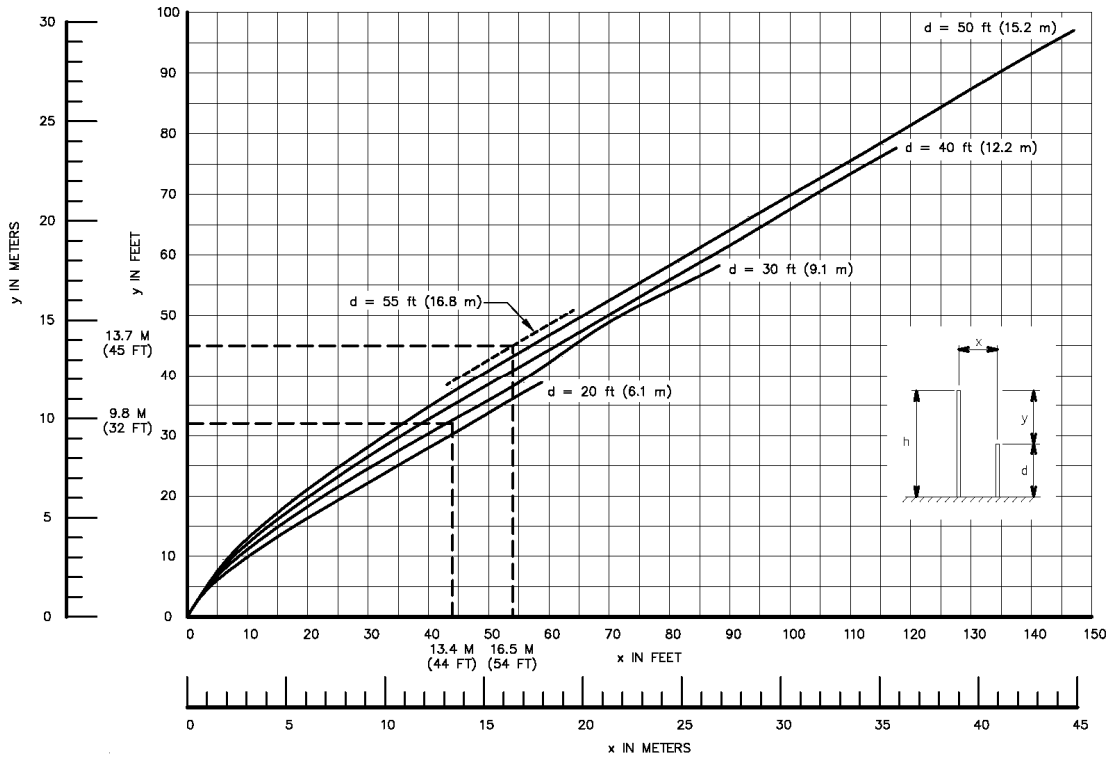

Figure B.12—Single lightning mast protecting single object—0.1% exposure. Height of mast above protected object, *y*, as a function of horizontal separation, *x*, and height of protected object, *d*.

Copyright © 2013 IEEE. All rights reserved.

Copyright The Institute of Electrical and Electronics Engineers, Inc.
Provided by IHS under license with IEEE
No reproduction or networking permitted without license from IHS

Order Number: 02120914
Sold to:EGAT [700166108393] - VARRIS.Y@EGAT.CO.TH,
Not for Resale,2016-09-15 03:57:48 UTC

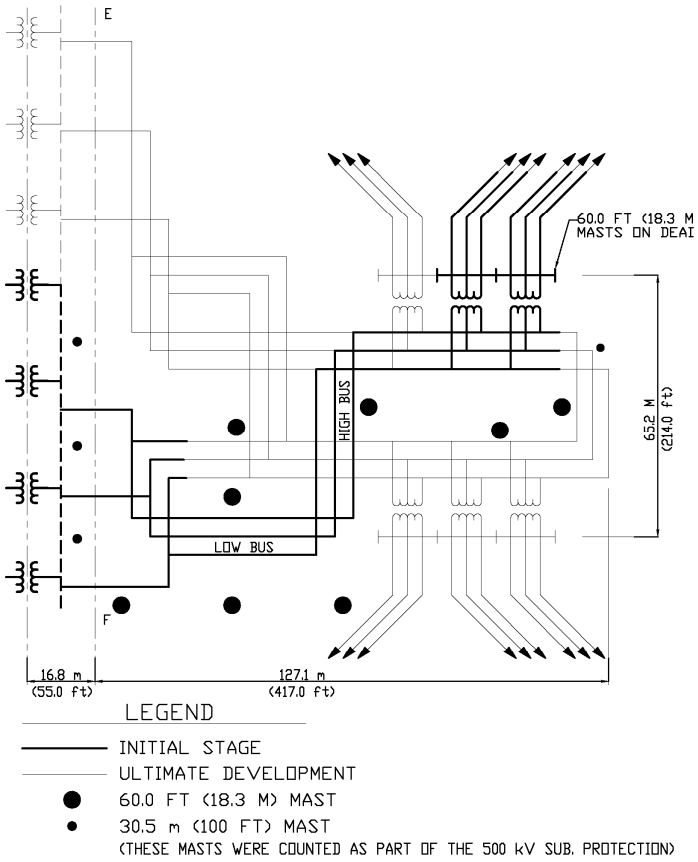

Figure B.13—Shielding a 230 kV substation with masts using empirical method

Copyright © 2013 IEEE. All rights reserved.

Copyright The Institute of Electrical and Electronics Engineers, Inc.
Provided by IHS under license with IEEE
No reproduction or networking permitted without license from IHS

Order Number: 02120914
Sold to:EGAT [700166108393] - VARRIS.Y@EGAT.CO.TH,
Not for Resale,2016-09-15 03:57:48 UTC

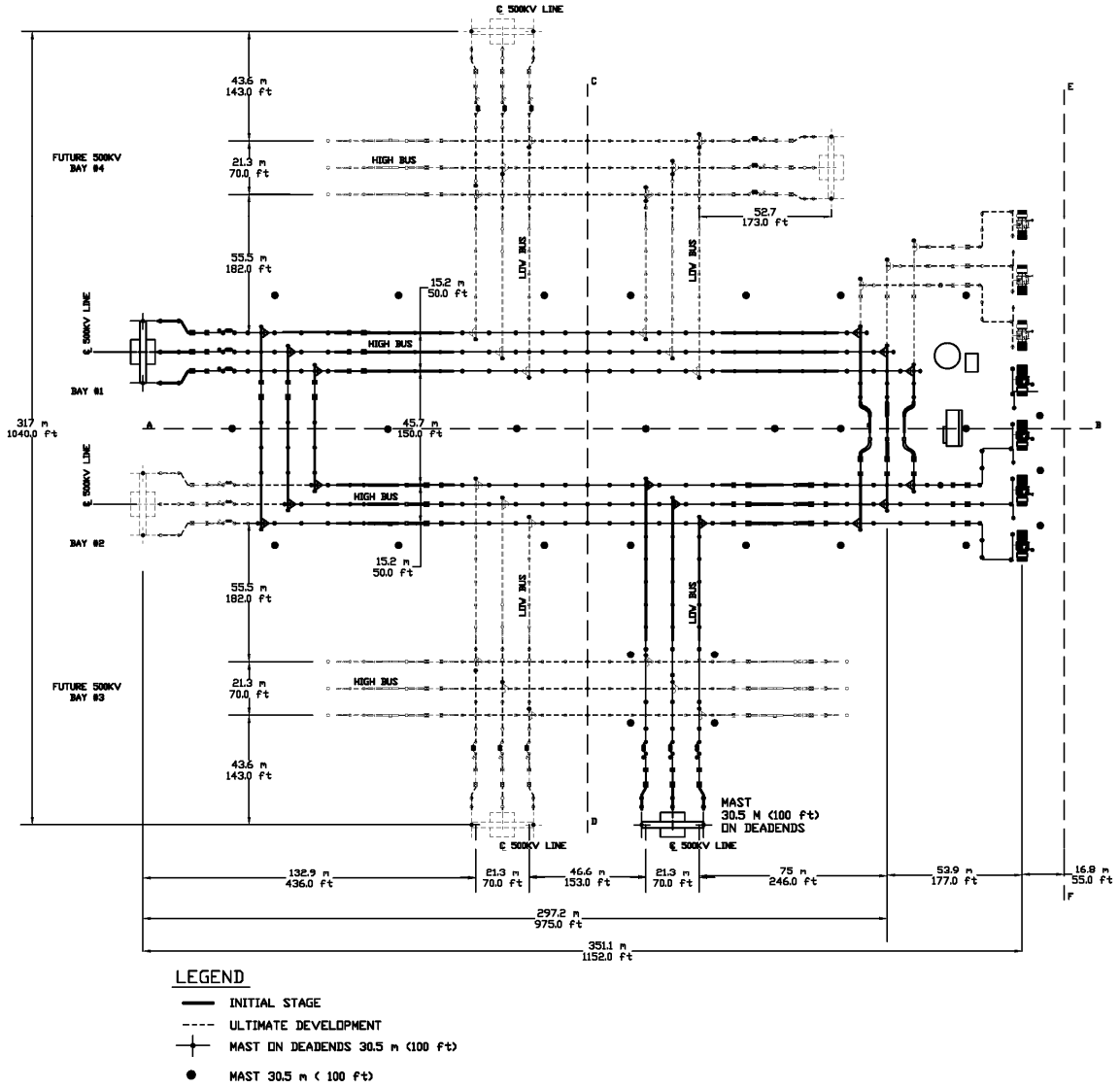

Figure B.14—Shielding a 500 kV substation with masts using empirical method (imperial units)

B.3.2.2 Example of protection by masts and shield wires

First, determine the maximum effective shield wire height. In Figure B.15, sketch in (by interpolation) a line to represent a 16.8 m (55 ft) bus height. Select the highest integer value of y on this line without leaving the right-hand boundary of the figure (y = 7 m [23 ft]). Therefore, the maximum effective height of the shield wires is 16.8 m + 7 m = 23.8 m (55 ft + 23 ft = 78 ft). A higher shield wire height is not selected because the designer would be extrapolating beyond the available data in Figure B.15.

To shield the 16.8 m (55 ft) high bus with 23.8 m (78 ft) high shield wire, enter Figure B.15 using a y value of 7 m (23 ft) from $h - d$ = 23.8 m – 16.8 m (78 ft − 55 ft). Move horizontally to a value for d = 16.8 m (55 ft) by interpolating. Project vertically to determine the maximum value for s = 47.9 m (157 ft). Next enter Figure B.16 with value of y = 7 m (23 ft) from $h - d$ = 23.8 m – 16.8 m (78 ft − 55 ft). Move horizontally to a value for d = 16.8 m (55 ft) by interpolating. Project vertically to determine the maximum

Copyright © 2013 IEEE. All rights reserved.

Copyright The Institute of Electrical and Electronics Engineers, Inc.
Provided by IHS under license with IEEE
No reproduction or networking permitted without license from IHS

Order Number: 02120914
Sold to:EGAT [700166108393] - VARRIS.Y@EGAT.CO.TH,
Not for Resale,2016-09-15 03:57:48 UTC

x = 4.6 m (15 ft). Thus, two shield wires elevated 7 m (23 ft) above the bus can be separated by no more than 47.9 m (157 ft) to provide protection for the 16.8 m (55 ft) bus. A single wire at the same elevation can be offset horizontally by no more than 4.6 m (15 ft) from the outer conductors.

To shield the 8.5 m (28 ft) high bus with 23.8 m (78 ft) high shield wire, enter Figure B.16 with value of y = 15.2 m (50 ft) from $h - d$ = 23.8 m – 8.5 m (78 ft − 28 ft). Move horizontally to a value for d = 8.5 m (28 ft) by interpolating. Project vertically to determine the maximum x = 15.8 m (52 ft). An inspection of Figure B.15 reveals that an attempt to enter the curve at y = 15.2 m (50 ft) falls off the curve, but it is evident that the shield wires can be separated by at least 48.8 m (160 ft). Place masts and shield wires to obtain complete coverage. The resulting layout using shield wires for shielding is shown in Figure B.17 and Figure B.18.

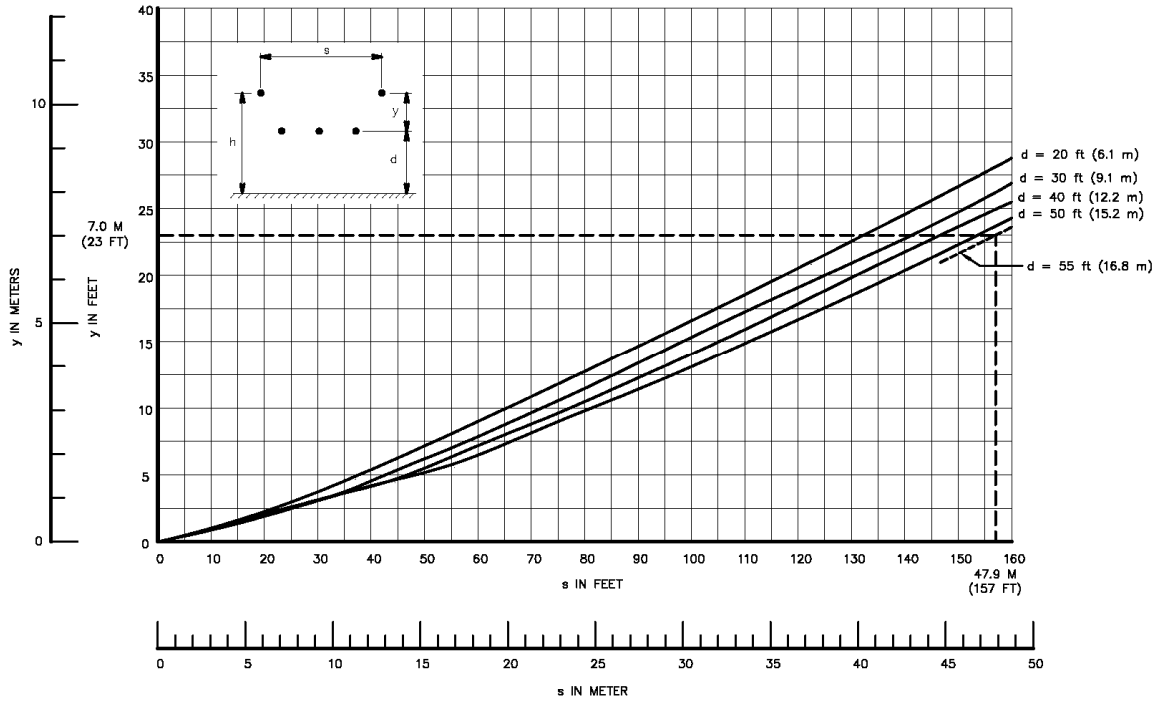

Figure B.15—Two shield wires protecting horizontal conductors—0.1% exposure. Height of shield wires above conductors, *y*, as a function of horizontal separation, *s*, and height of protected conductors, *d*.

Copyright © 2013 IEEE. All rights reserved.

Copyright The Institute of Electrical and Electronics Engineers, Inc.
Provided by IHS under license with IEEE
No reproduction or networking permitted without license from IHS

Order Number: 02120914
Sold to:EGAT [700166108393] - VARRIS.Y@EGAT.CO.TH,
Not for Resale,2016-09-15 03:57:48 UTC

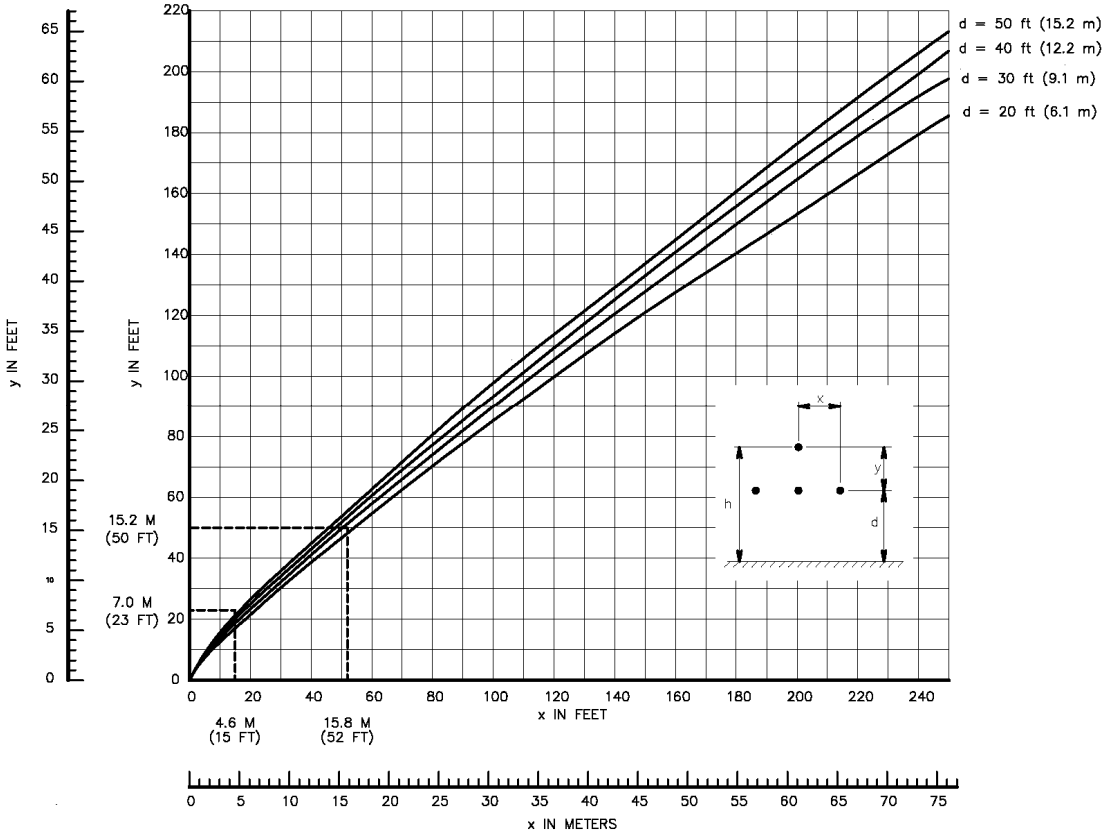

Figure B.16—Single shield wire protecting horizontal conductors—0.1% exposure. Height of shield wires above conductors, *y*, as a function of horizontal separation, *x*, and height of protected conductors, *d.*

Copyright © 2013 IEEE. All rights reserved.

Copyright The Institute of Electrical and Electronics Engineers, Inc.
Provided by IHS under license with IEEE
No reproduction or networking permitted without license from IHS

Order Number: 02120914
Sold to:EGAT [700166108393] - VARRIS.Y@EGAT.CO.TH,
Not for Resale,2016-09-15 03:57:48 UTC

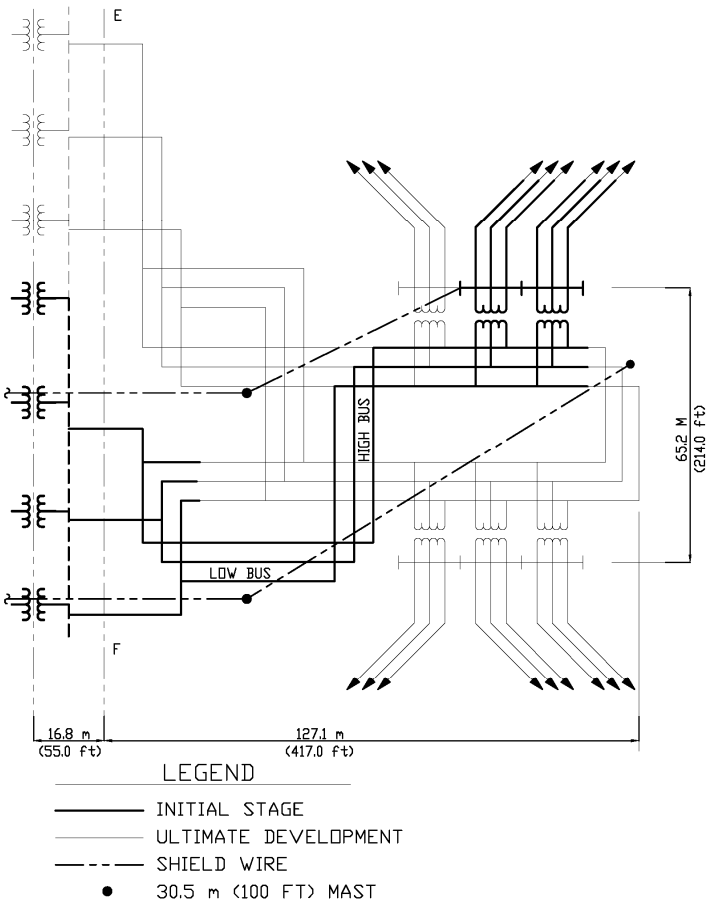

Figure B.17—Shielding a 230 kV substation with shield wires using empirical method

Copyright © 2013 IEEE. All rights reserved.

Copyright The Institute of Electrical and Electronics Engineers, Inc.
Provided by IHS under license with IEEE
No reproduction or networking permitted without license from IHS

Order Number: 02120914
Sold to:EGAT [700166108393] - VARRIS.Y@EGAT.CO.TH,
Not for Resale,2016-09-15 03:57:48 UTC

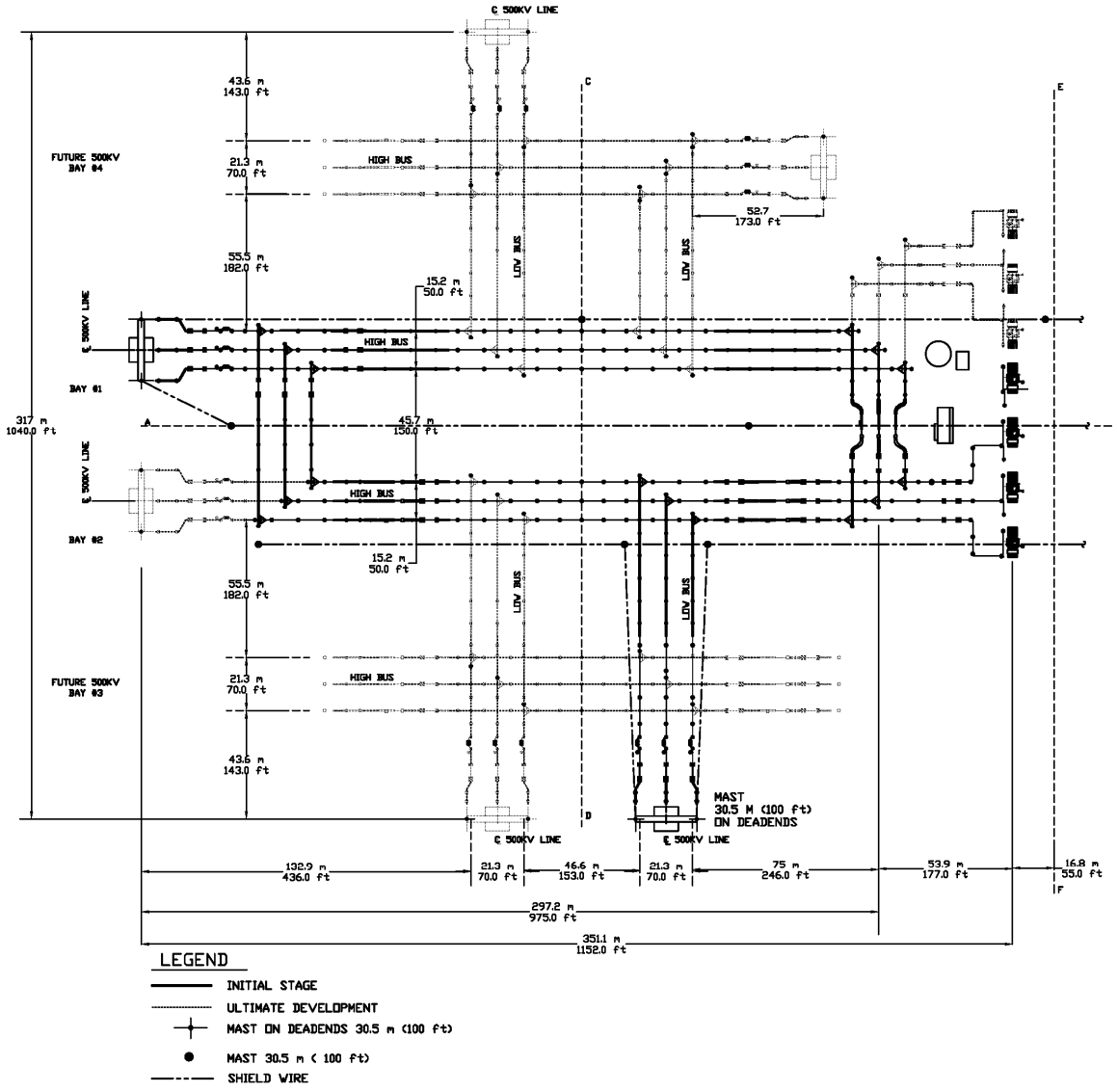

Figure B.18—Shielding a 500 kV substation with shield wires using empirical method

B.4 Electrogeometric model—rolling sphere method

B.4.1 Application design procedure for masts

Application of the electrogeometric theory by the rolling sphere method involves rolling an imaginary sphere of radius S over substation lightning terminals such as lightning masts, shield wires, and metal support structures as described in 6.3. Therefore, to apply the method to the example substations requires the computation of the radius S, and this will first require the calculation of Z_s, the surge impedance, and I_s, the allowable stroke current for the various buses within the substation.

Annex C gives a method of calculating surge impedance under corona. Corona radius can be taken from Figure C.1 or calculated from Equation (C.1) or Equation (C.2). The engineer who designs protection

Copyright © 2013 IEEE. All rights reserved.

Copyright The Institute of Electrical and Electronics Engineers, Inc.
Provided by IHS under license with IEEE
No reproduction or networking permitted without license from IHS

Order Number: 02120914
Sold to:EGAT [700166108393] - VARRIS.Y@EGAT.CO.TH,
Not for Resale,2016-09-15 03:57:48 UTC

systems on a regular basis could write a simple computer program to perform these calculations. Once the corona radius is determined, it is an easy matter to calculate the surge impedance. The surge impedance will be required for each bus of a different height and conductor type.

Next, the designer will calculate the allowable stroke current from Equation (18) using the above values. The striking distance then can be calculated from Equation (17). In the examples, $k = 1.2$ has been used for the mast example, and $k = 1$ has been used for the shield wire example. For a combination of masts and wires, the designer can use $k = 1$, which will give a conservative result. 6.3.1 states that the usual practice is to assume that the striking distance to a mast, a shield wire, or the ground is the same. This suggests the use of only one k value. The example calculations demonstrate that a different k can be used for masts resulting in a more economical design.

The designer is now ready to roll the imaginary sphere over the example substation. If the sphere remains above the equipment and busses to be protected as seen in the center of Figure 24, the design is satisfactory. If the equipment touches or enters the sphere as seen in the right side of Figure 24, the equipment is not protected and the design must be revised.

The designer can determine if some areas of the station are protected by simply striking arcs on a scale drawing of the substation. Further calculation is necessary, however, to determine the maximum separation of wires and masts to prevent the sphere from sinking between them and touching the equipment to be protected. The following examples illustrate how to calculate these quantities.

B.4.2 Nomenclature used in the calculations

The nomenclature listed below are used in the following calculations: For calculations when using masts:

- *S* Sphere radius
- *H* Mast height (calculations use an assumed height; designers typically pick a mast height suitable for the design)
- *A* Bus height
- *W&C* Horizontal distance from origin of sphere (OOS) to bus
- *T* Maximum separation from mast to bus for protection
- *Y* Minimum phase to steel clearance
- *Z* Horizontal distance between OOS and line drawn between two masts
- *L* Half the separation between two masts
- *X* Maximum separation between two masts
- *D* Elevation difference between mast and bus
- *E* Elevation difference between mast and OOS
- *J* Horizontal distance between OOS and mast
- *K* Diagonal distance between masts when four masts support the sphere
- *P* Distance between masts when four masts support the sphere
- *Q* Distance between masts when three masts support the sphere

For calculations using shield wires:

- *S* Sphere radius
- *H* Wire height (calculations use assumed heights; designers typically pick mast height suitable for his/her design)
- *A* Bus height
- *L* Half the separation between two wires

Copyright © 2013 IEEE. All rights reserved.

Copyright The Institute of Electrical and Electronics Engineers, Inc.
Provided by IHS under license with IEEE
No reproduction or networking permitted without license from IHS

Order Number: 02120914
Sold to:EGAT [700166108393] - VARRIS.Y@EGAT.CO.TH,
Not for Resale,2016-09-15 03:57:48 UTC

X Maximum separation between two wires
D Elevation difference between wire and bus
E Elevation difference between wire and OOS
R Horizontal distance between OOS and wire
T Horizontal distance between OOS and bus
C Horizontal distance between shield wire and bus

The resulting lay out is found in Figure B.19 and Figure B.20.

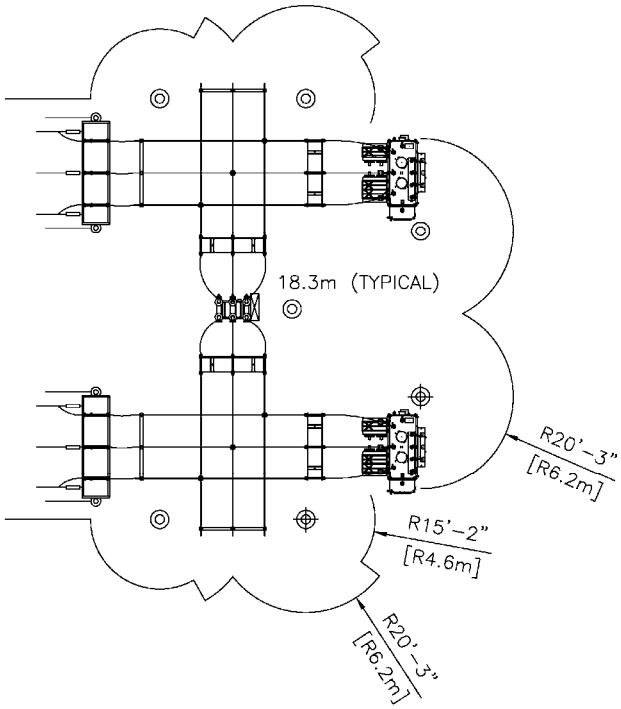

Figure B.19—Mast protection for a 69 kV substation

Copyright © 2013 IEEE. All rights reserved.

Copyright The Institute of Electrical and Electronics Engineers, Inc.
Provided by IHS under license with IEEE
No reproduction or networking permitted without license from IHS

Order Number: 02120914
Sold to:EGAT [700166108393] - VARRIS.Y@EGAT.CO.TH,
Not for Resale,2016-09-15 03:57:48 UTC

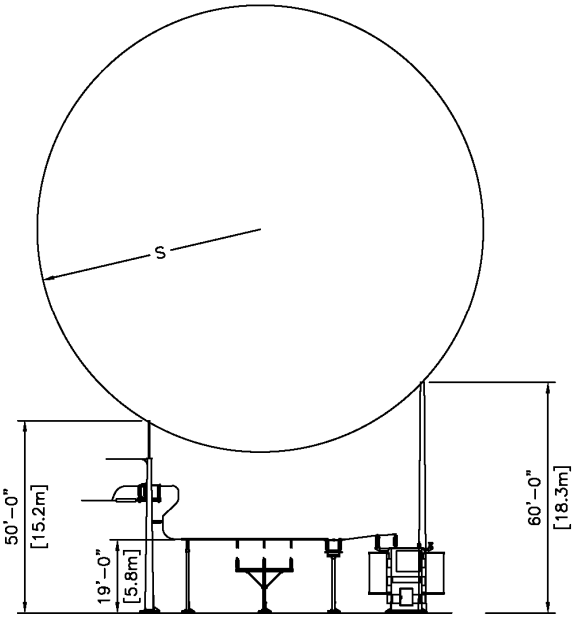

Figure B.20—Mast protection for a 69 kV substation

B.4.3 Calculations for mast protection of 69 kV substation

69 kV Substation example—protection by mast

$Z_s = 300\Omega$ BIL = 350 kV

$$I_s = \frac{BIL \times 2.2}{Z_s}$$ Equation (18)

$I_s = 2.567kA$

$k = 1.2$

$$S = 8kI_s^{0.65}$$ Equation (17)

$S = 17.72m$

$H = 18.29m$ Assumed mast height

Height of 69 kV bus #1:

$A_1 = 5.79m$

$C_1 = \sqrt{S^2 - (S - A_1)^2}$

Height of 69 kV bus #2:

$A_2 = 4.27m$

$C_2 = \sqrt{S^2 - (S - A_2)^2}$

Copyright © 2013 IEEE. All rights reserved.

Copyright The Institute of Electrical and Electronics Engineers, Inc.
Provided by IHS under license with IEEE
No reproduction or networking permitted without license from IHS

Order Number: 02120914
Sold to:EGAT [700166108393] - VARRIS.Y@EGAT.CO.TH,
Not for Resale,2016-09-15 03:57:48 UTC

$C_1 = 13.10m$ $C_2 = 11.54m$

Also, $C = S - T$

$T_1 = S - C_1$ $T_2 = S - C_2$

$T_1 = 4.62m$ $T_2 = 6.18m$

These values are the maximum separation between the mast and protected bus for the two bus heights *A*.

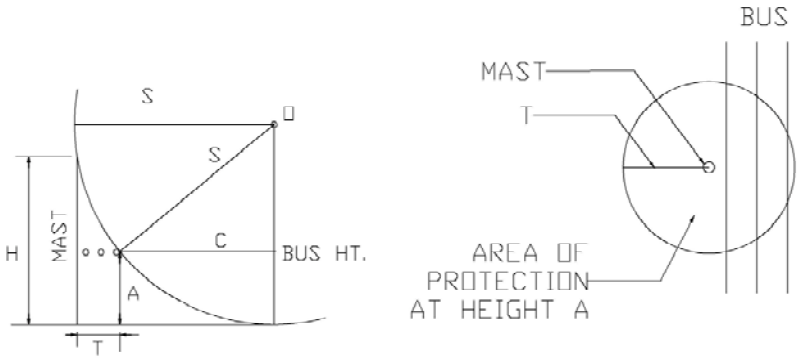

Maximum distance between two masts for side stroke

$W_1 = \sqrt{S^2 - (S - A_1)^2}$ $W_2 = \sqrt{S^2 - (S - A_2)^2}$

$W_1 = 13.10m$ $W_2 = 11.54m$

$Y = 1m$

$Z_1 = W_1 - Y$ $Z_2 = W_2 - Y$

$Z_1 = 12.10m$ $Z_2 = 10.54m$

$L_1 = \sqrt{S^2 - Z_1^{\,2}}$ $L_2 = \sqrt{S^2 - Z_2^{\,2}}$

$L_1 = 12.95m$ $L_2 = 14.24m$

$X_1 = 2L_1$ $X_2 = 2L_2$

$X_1 = 25.90m$ $X_2 = 28.48m$

These values are the maximum separation of two masts for protection of bus at the two heights *A*.

Copyright © 2013 IEEE. All rights reserved.

Copyright The Institute of Electrical and Electronics Engineers, Inc.
Provided by IHS under license with IEEE
No reproduction or networking permitted without license from IHS

Order Number: 02120914
Sold to:EGAT [700166108393] - VARRIS.Y@EGAT.CO.TH,
Not for Resale,2016-09-15 03:57:48 UTC

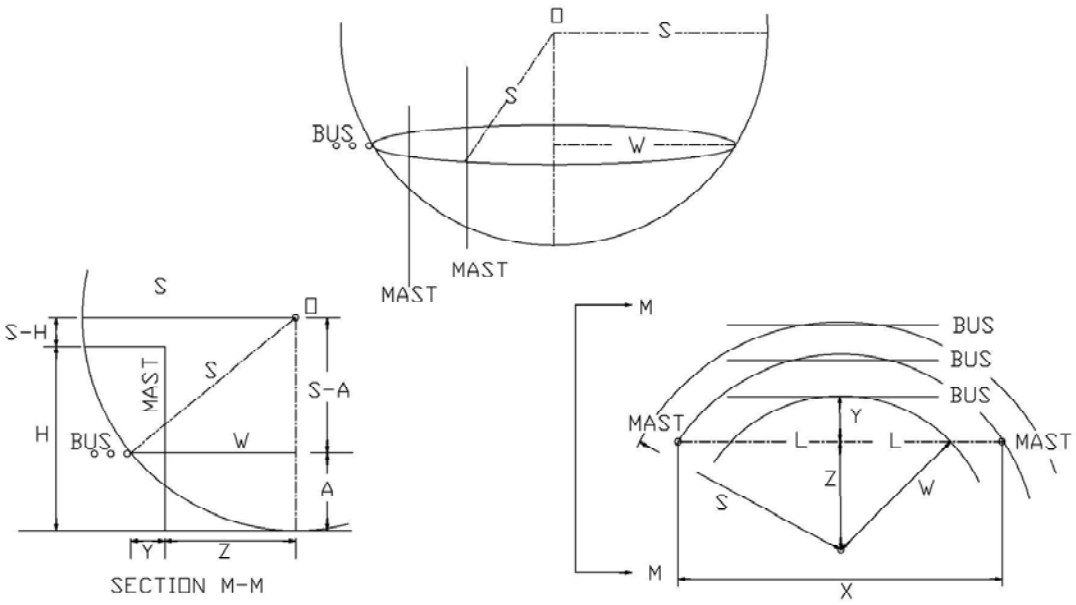

Maximum distance between masts for vertical stroke sphere supported by four masts

D must be less than or equal to $H - A$ for protection of height A.

$$D_1 = H - A_1 \qquad D_2 = H - A_2$$

$$D_1 = 12.50m \qquad D_2 = 14.02m$$

$$E_1 = S - D_1 \qquad E_2 = S - D_2$$

$$E_1 = 5.22m \qquad E_2 = 3.70m$$

$$J_1 = \sqrt{S^2 - E_1^2} \qquad J_2 = \sqrt{S^2 - E_2^2}$$

$$J_1 = 16.93m \qquad J_2 = 17.33m$$

$$K_1 = 2J_1 \qquad K_2 = 2J_2$$

$$K_1 = 33.86m \qquad K_2 = 34.66m$$

$$P_1 = \frac{K_1}{\sqrt{2}} \qquad P_2 = \frac{K_2}{\sqrt{2}}$$

$$P_1 = 23.94m \qquad P_2 = 24.51m$$

These values are the maximum spacing of four masts for protection of bus at the two heights A.

Copyright © 2013 IEEE. All rights reserved.

Copyright The Institute of Electrical and Electronics Engineers, Inc.
Provided by IHS under license with IEEE
No reproduction or networking permitted without license from IHS

Order Number: 02120914
Sold to:EGAT [700166108393] - VARRIS.Y@EGAT.CO.TH,
Not for Resale,2016-09-15 03:57:48 UTC

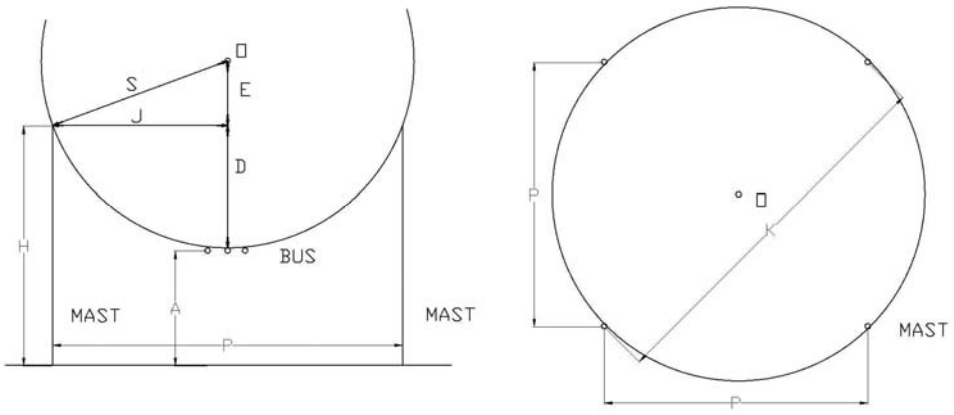

Maximum distance between masts for vertical stroke sphere supported by three masts

$$Q_1 = 2\cos\left(\frac{30\pi}{180}\right)J_1 \qquad Q_2 = 2\cos\left(\frac{30\pi}{180}\right)J_2$$

$$Q_1 = 29.32m \qquad Q_2 = 30.02m$$

These values are the maximum spacing of three masts for protection of bus at the two heights *A*.

However, *Q* shall not be greater than *X* (the maximum separation of two masts).

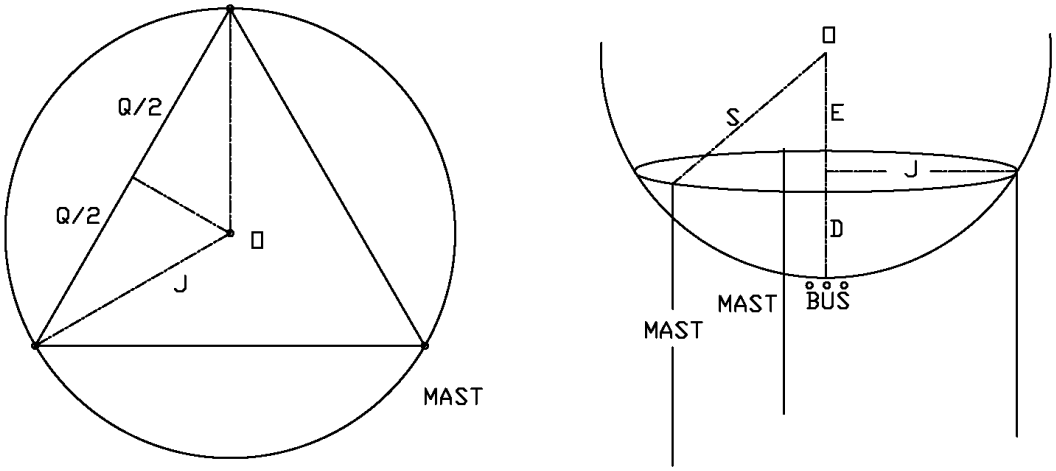

Copyright © 2013 IEEE. All rights reserved.
Copyright The Institute of Electrical and Electronics Engineers, Inc.
Provided by IHS under license with IEEE
No reproduction or networking permitted without license from IHS
Order Number: 02120914
Sold to:EGAT [700166108393] - VARRIS.Y@EGAT.CO.TH,
Not for Resale,2016-09-15 03:57:48 UTC

B.4.4 Calculations for shield wire protection of a 69 kV substation

The procedure for designing a shield wire system follows a similar routine. For parallel wires, only two calculations are required: the horizontal distance *C,* to prevent side strokes and the distance *X*, the maximum separation to prevent vertical strokes.

The 14 ft bus (or the transformer that is at the same height) can extend 13 ft beyond the shield wire and still be protected from side strokes. Since the transformer does not extend beyond the shield wire it is protected. The high bus can extend 9 ft beyond the shield wire and be protected. Since it extends only 6 ft beyond, it is protected.

Calculations are also included for a 60 ft shield wire height. Notice that the values for *C* are slightly less than for a 40 ft wire height. This illustrates that a 60 ft wire height would give less protection from side stroke. A study of Figure B.23 will show why this is true.

The calculations for maximum shield wire separation for the 14 ft bus yield a value of 86 ft. Since the actual separation is 84 ft, the bus is protected. A maximum separation of 80 ft is permitted for the 19 ft bus and it is protected since the separation is 79 ft. The set of shield wires actually protects the low bus as well, and the other set is needed only for side stroke protection. The incoming line conductors are fully shielded by the existing shield wires. This completes the protection of the substation. The resulting layout is found in Figure B.21, Figure B.22, and Figure B.23.

69 kV substation example—protection by shield wire (height = 18.25 m)

$Z_s = 300\Omega$ $BIL = 350kV$

$$I_s = \frac{BIL \times 2.2}{Z_s}$$ Equation (18)

$I_s = 2.567kA$

$k = 1.0$

$$S = 8kI_s^{0.65}$$ Equation (17)

$S = 14.76m$

Assumed wire height:

$H = 18.29m$

Height of 69 kV bus #1: Height of 69 kV bus #2:

$A_1 = 5.79m$ $A_2 = 4.27m$

$R = \sqrt{S^2 - (H - S)^2}$

$R = 14.33m$

$T_1 = \sqrt{S^2 - (S - A_1)^2}$ $T_2 = \sqrt{S^2 - (S - A_2)^2}$

Copyright © 2013 IEEE. All rights reserved.

Copyright The Institute of Electrical and Electronics Engineers, Inc.
Provided by IHS under license with IEEE
No reproduction or networking permitted without license from IHS

Order Number: 02120914
Sold to:EGAT [700166108393] - VARRIS.Y@EGAT.CO.TH,
Not for Resale,2016-09-15 03:57:48 UTC

$T_1 = 11.72m$ $T_2 = 10.38m$

$C_1 = R - T_1$ $C_2 = R - T_2$

$C_1 = 2.61m$ $C_2 = 3.95m$

These values are the maximum horizontal separation of shield wire and bus for protection at bus height A.

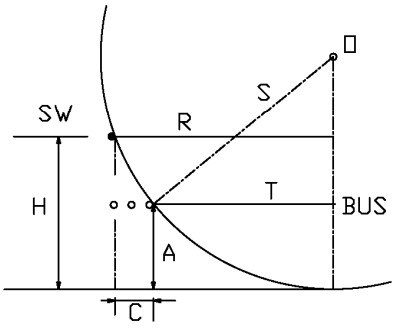

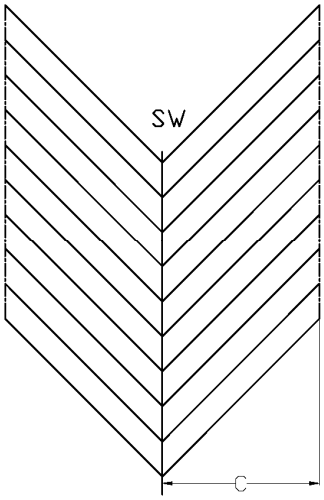

Maximum distance between two wires for vertical stroke (*D* must be less than or equal *H – A* for protection at height *A*).

$D_1 = H - A_1$ $D_2 = H - A_2$

$D_1 = 12.50m$ $D_2 = 14.01m$

$E_1 = S - D_1$ $E_2 = S - D_2$

$E_1 = 2.26m$ $E_2 = 0.75m$

$L_1 = \sqrt{S^2 - E_1^2}$ $L_2 = \sqrt{S^2 - E_2^2}$

$L_1 = 14.59m$ $L_2 = 14.74m$

$X_1 = 2L_1$ $X_2 = 2L_2$

$X_1 = 29.18m$ $X_2 = 29.48m$

These values are the maximum separation of shield wires for protection of bus at height A.

Copyright © 2013 IEEE. All rights reserved.

Copyright The Institute of Electrical and Electronics Engineers, Inc.
Provided by IHS under license with IEEE
No reproduction or networking permitted without license from IHS

Order Number: 02120914
Sold to:EGAT [700166108393] - VARRIS.Y@EGAT.CO.TH,
Not for Resale,2016-09-15 03:57:48 UTC

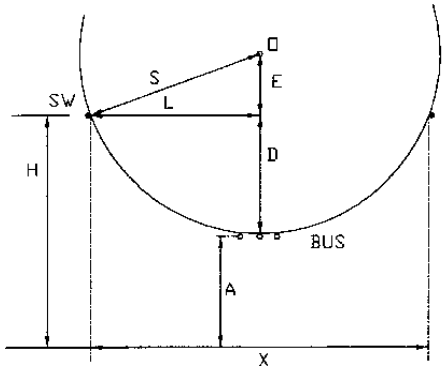

69 kV substation example—protection by shield wires (height = 19.19 m)

$Z_s = 300\Omega$ $BIL = 350kV$

$$I_s = \frac{BIL \times 2.2}{Z_s}$$ Equation (18)

$I_s = 2.567kA$

$k = 1.0$

$$S = 8kI_s^{0.65}$$ Equation (17)

$S = 14.76m$

Assumed wire height: $H = 12.19m$

Height bus 69 kV bus #1: Height of 69 kV bus #2:

$A_1 = 5.79m$ $A_2 = 4.27m$

$R = \sqrt{S^2 - (H - S)^2}$

$R = 14.53m$

$T_1 = \sqrt{S^2 - (S - A_1)^2}$ $T_2 = \sqrt{S^2 - (S - A_2)^2}$

$T_1 = 11.72m$ $T_2 = 10.38m$

$C_1 = R - T_1$ $C_2 = R - T_2$

$C_1 = 2.81m$ $C_2 = 4.15m$

These values are the maximum horizontal separation of shield wire and bus for protection at bus height *A*.

Copyright © 2013 IEEE. All rights reserved.
Copyright The Institute of Electrical and Electronics Engineers, Inc.
Provided by IHS under license with IEEE
No reproduction or networking permitted without license from IHS
Order Number: 02120914
Sold to:EGAT [700166108393] - VARRIS.Y@EGAT.CO.TH,
Not for Resale,2016-09-15 03:57:48 UTC

Maximum distance between two wires for vertical stroke (*D* must be less than or equal *H – A* for protection at height *A*).

$D_1 = H - A_1$ $D_2 = H - A_2$

$D_1 = 6.4m$ $D_2 = 7.92m$

$E_1 = S - D_1$ $E_2 = S - D_2$

$E_1 = 8.36m$ $E_2 = 6.84m$

$L_1 = \sqrt{S^2 - E_1^2}$ $L_2 = \sqrt{S^2 - E_2^2}$

$L_1 = 12.16m$ $L_2 = 13.08m$

$X_1 = 2L_1$ $X_2 = 2L_2$

$X_1 = 24.32m$ $X_2 = 26.16m$

These values are the maximum separation of shield wires for protection at bus height *A*.

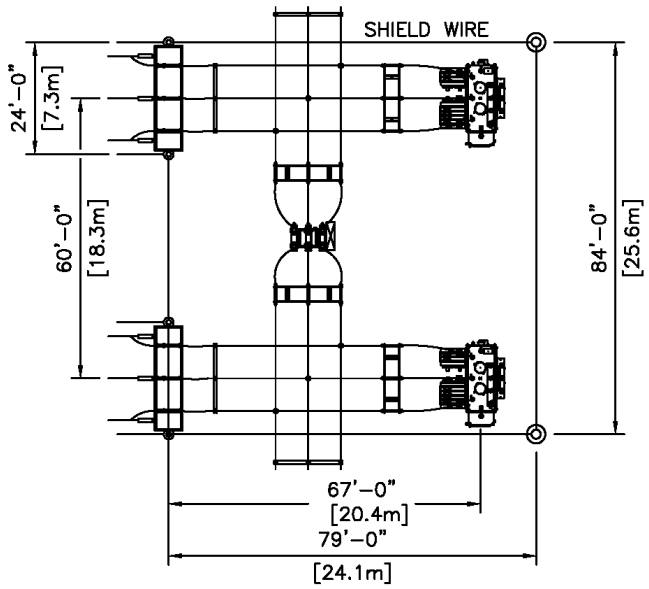

Figure B.21—Shield wire protection for 69 kV substation

Copyright © 2013 IEEE. All rights reserved.
Copyright The Institute of Electrical and Electronics Engineers, Inc.
Provided by IHS under license with IEEE
No reproduction or networking permitted without license from IHS
Order Number: 02120914
Sold to:EGAT [700166108393] - VARRIS.Y@EGAT.CO.TH,
Not for Resale,2016-09-15 03:57:48 UTC

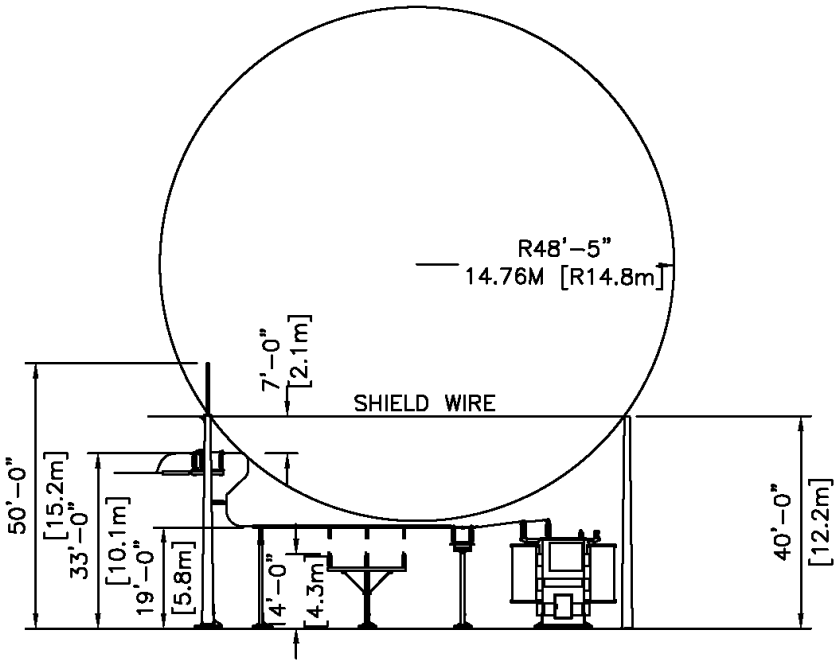

Figure B.22—Shield wire protection for 69 kV section AA

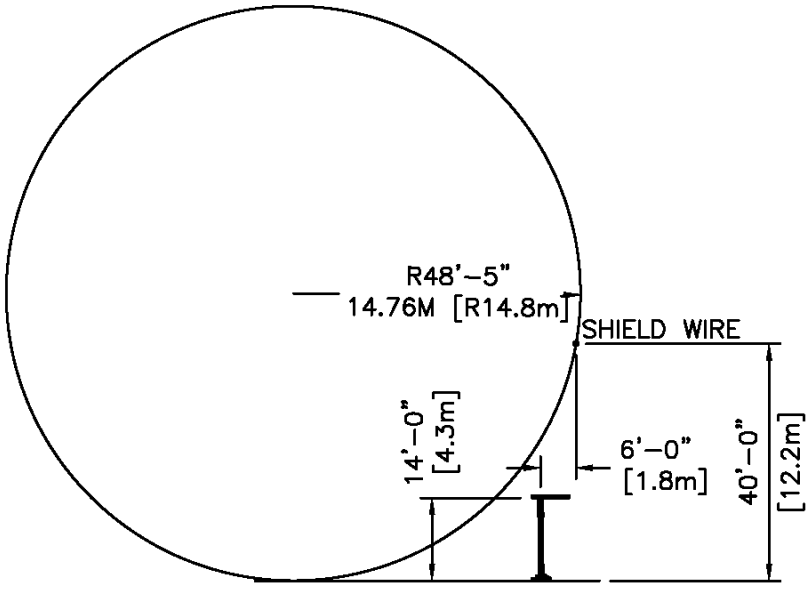

Figure B.23—Shield wire protection for 69 kV section BB

Copyright © 2013 IEEE. All rights reserved.

Copyright The Institute of Electrical and Electronics Engineers, Inc.
Provided by IHS under license with IEEE
No reproduction or networking permitted without license from IHS

Order Number: 02120914
Sold to:EGAT [700166108393] - VARRIS.Y@EGAT.CO.TH,
Not for Resale,2016-09-15 03:57:48 UTC

B.4.5 The 500/230 kV switchyard—dealing with multiple voltages

The procedure of applying the rolling sphere method when there are multiple voltages in a substation is quite simple, as illustrated by the sample substation. The designer simply makes a separate calculation for each voltage level in the station using the appropriate BIL and surge impedance. At the voltage interface (usually the transformer) the designer should determine whether the lower voltage equipment is protected by using the appropriate lower striking distance. If low voltage busses are present, it might be appropriate to use a minimum stoke current of 2 kA for the design calculations in these areas see 6.3.6.

The procedure for the 500 kV portion of the switchyard and for the 230 kV portion taken separately follow the same routine as has been previously discussed for the 69 kV example. Calculations for mast placement in the 500 kV portion of the station are in B.4.5.1. The 230 kV calculations are in B.4.5.2. The resulting layout is shown in Figure B.24. 500 kV shield wire calculations are in B.4.5.3 with the 230 kV shield wire calculations in B.4.5.4. The resulting layout from those calculations is shown in Figure B.25.

A summary of the rolling sphere method results can be found in Table B.5 and Table B.6.

B.4.5.1 Calculations for 500 kV substation with masts

$Z_s = 336\Omega$ $BIL = 1800kV$

$$I_s = \frac{BIL \times 2.2}{Z_s}$$ Equation (18)

$I_s = 11.786kA$

$k = 1.2$

$$S = 8kI_s^{0.65}$$ Equation (17)

$S = 47.72m$

Assumed mast height: $H = 30.48m$

Height bus 500 kV bus #1:

$A_1 = 16.76m$

$C_1 = \sqrt{S^2 - (S - A_1)^2}$

$C_1 = 36.31m$

Height of 500 kV bus #2:

$A_2 = 9.14m$

$C_2 = \sqrt{S^2 - (S - A_2)^2}$

$C_2 = 28.09m$

$R = \sqrt{S^2 - (S - H)^2}$

$R = 44.50m$

Copyright © 2013 IEEE. All rights reserved.

Copyright The Institute of Electrical and Electronics Engineers, Inc.
Provided by IHS under license with IEEE
No reproduction or networking permitted without license from IHS

Order Number: 02120914
Sold to:EGAT [700166108393] - VARRIS.Y@EGAT.CO.TH,
Not for Resale,2016-09-15 03:57:48 UTC

$T_1 = R - C_1$ $T_2 = R - C_2$

$T_1 = 8.19m$ $T_2 = 16.41m$

These values are the maximum separation between the mast and protected bus for the two bus heights *A*.

Maximum distance between two masts for side stroke

$W_1 = \sqrt{S^2 - (S - A_1)^2}$ $W_2 = \sqrt{S^2 - (S - A_2)^2}$

$W_1 = 36.31m$ $W_2 = 28.09m$

$Y = 1.80m$

$Z_1 = W_1 - Y$ $Z_2 = W_2 - Y$

$Z_1 = 34.51m$ $Z_2 = 26.29m$

$L_1 = \sqrt{R^2 - Z_1^2}$ $L_2 = \sqrt{R^2 - Z_2^2}$

$L_1 = 28.10m$ $L_2 = 35.90m$

$X_1 = 2L_1$ $X_2 = 2L_2$

$X_1 = 56.20m$ $X_2 = 71.8m$

These values are the maximum separation of two masts for protection of bus at the two bus heights *A*.

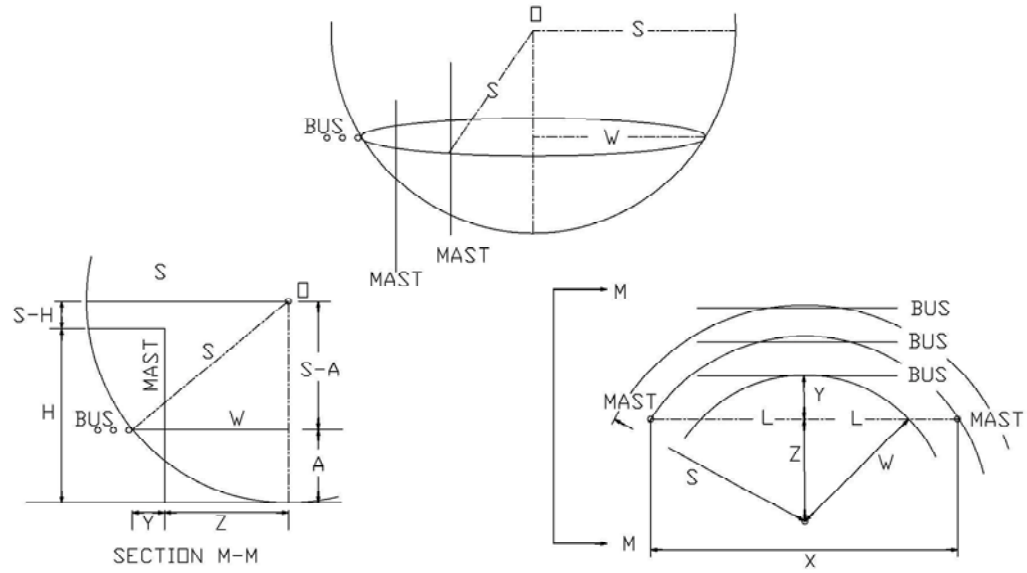

Copyright © 2013 IEEE. All rights reserved.

Copyright The Institute of Electrical and Electronics Engineers, Inc.
Provided by IHS under license with IEEE
No reproduction or networking permitted without license from IHS

Order Number: 02120914
Sold to:EGAT [700166108393] - VARRIS.Y@EGAT.CO.TH,
Not for Resale,2016-09-15 03:57:48 UTC

Maximum distance between two masts for vertical stroke sphere supported by four masts

D must be less than or equal to *H* – *A* for protection at height *A*.

$D_1 = H - A_1$ $\qquad$ $D_2 = H - A_2$

$D_1 = 13.72m$ $\qquad$ $D_2 = 21.34m$

$E_1 = S - D_1$ $\qquad$ $E_2 = S - D_2$

$E_1 = 34m$ $\qquad$ $E_2 = 26.38m$

$J_1 = \sqrt{S^2 - E_1^2}$ $\qquad$ $J_2 = \sqrt{S^2 - E_2^2}$

$J_1 = 33.48m$ $\qquad$ $J_2 = 39.77m$

$K_1 = 2J_1$ $\qquad$ $K_2 = 2J_2$

$K_1 = 66.96m$ $\qquad$ $K_2 = 79.54m$

$P_1 = \frac{K_1}{\sqrt{2}}$ $\qquad$ $P_2 = \frac{K_2}{\sqrt{2}}$

$P_1 = 47.35m$ $\qquad$ $P_2 = 56.24m$

These values are the maximum spacing of four masts for protection of bus at the two heights *A*.

Maximum distance between two masts for vertical stroke sphere supported by three masts

$Q_1 = 2\cos\left(\frac{30\pi}{180}\right)J_1$ $\qquad$ $Q_2 = 2\cos\left(\frac{30\pi}{180}\right)J_2$

$Q_1 = 57.99m$ $\qquad$ $Q_2 = 68.88m$

These values are the maximum spacing of three masts for protection at the two bus heights *A*.

However, *Q* shall not be greater than *X*.

Copyright © 2013 IEEE. All rights reserved.

Copyright The Institute of Electrical and Electronics Engineers, Inc.
Provided by IHS under license with IEEE
No reproduction or networking permitted without license from IHS

Order Number: 02120914
Sold to:EGAT [700166108393] - VARRIS.Y@EGAT.CO.TH,
Not for Resale,2016-09-15 03:57:48 UTC

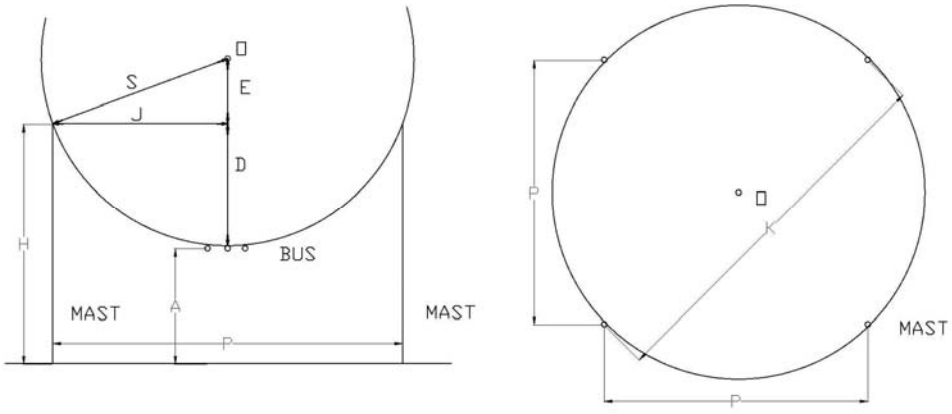

B.4.5.2 Calculations for 230 kV substation with masts

230 kV substation example—protection by masts

$Z_s = 336\Omega$ $BIL = 900kV$

$$I_s = \frac{BIL \times 2.2}{Z_s}$$ Equation (18)

$I_s = 5.893kA$

$k = 1.2$

$$S = 8kI_s^{0.65}$$ Equation (17)

$S = 30.41m$

Assumed wire height: $H = 30.48m$

Height bus 230 kV bus #1: Height of 230 kV bus #2: Height of 230 kV bus #3:

$A_1 = 8.53m$ $A_2 = 6.07m$ $A_3 = 11.89m$

$C_1 = \sqrt{S^2 - (S - A_1)^2}$ $C_2 = \sqrt{S^2 - (S - A_2)^2}$ $C_3 = \sqrt{S^2 - (S - A_3)^2}$

$C_1 = 21.12m$ $C_2 = 18.23m$ $C_3 = 24.12m$

Also, $C = S - T$

Copyright © 2013 IEEE. All rights reserved.
Copyright The Institute of Electrical and Electronics Engineers, Inc.
Provided by IHS under license with IEEE
No reproduction or networking permitted without license from IHS
Order Number: 02120914
Sold to:EGAT [700166108393] - VARRIS.Y@EGAT.CO.TH,
Not for Resale,2016-09-15 03:57:48 UTC

$T_1 = S - C_1$ $T_2 = S - C_2$ $T_3 = S - C_3$

$T_1 = 9.29m$ $T_2 = 12.18m$ $T_3 = 6.29m$

These values are the maximum separation between the mast and protected bus for the two bus heights *A*.

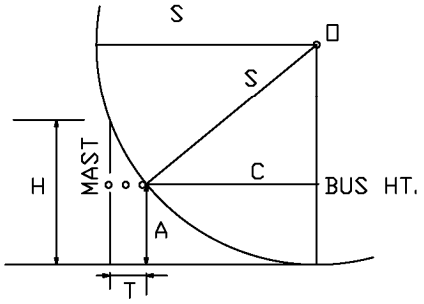

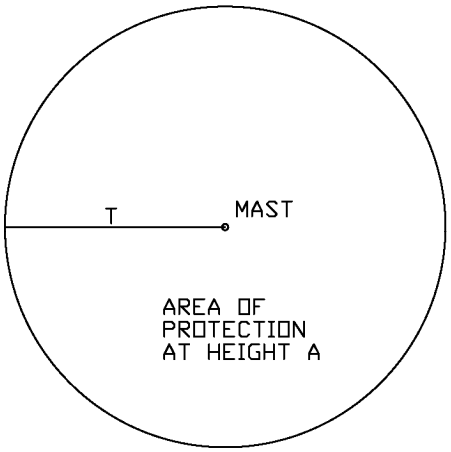

Maximum distance between two masts for side stroke

$W_1 = \sqrt{S^2 - (S - A_1)^2}$ $W_2 = \sqrt{S^2 - (S - A_2)^2}$ $W_3 = \sqrt{S^2 - (S - A_3)^2}$

$W_1 = 21.12m$ $W_2 = 18.23m$ $W_3 = 24.12m$

$Y = 1.80m$

$Z_1 = W_1 - Y$ $Z_2 = W_2 - Y$ $Z_3 = W_3 - Y$

$Z_1 = 19.32m$ $Z_2 = 16.43m$ $Z_3 = 22.32m$

$L_1 = \sqrt{S^2 - Z_1^2}$ $L_2 = \sqrt{S^2 - Z_2^2}$ $L_2 = \sqrt{S^2 - Z_3^2}$

$L_1 = 23.48m$ $L_2 = 25.60m$ $L_3 = 20.65m$

$X_1 = 2L_1$ $X_2 = 2L_2$ $X_3 = 2L_3$

$X_1 = 46.96m$ $X_1 = 51.2m$ $X_3 = 41.30m$

These values are the maximum separation of two masts for protection of bus at the three heights *A*.

Copyright © 2013 IEEE. All rights reserved.

Copyright The Institute of Electrical and Electronics Engineers, Inc.
Provided by IHS under license with IEEE
No reproduction or networking permitted without license from IHS

Order Number: 02120914
Sold to:EGAT [700166108393] - VARRIS.Y@EGAT.CO.TH,
Not for Resale,2016-09-15 03:57:48 UTC

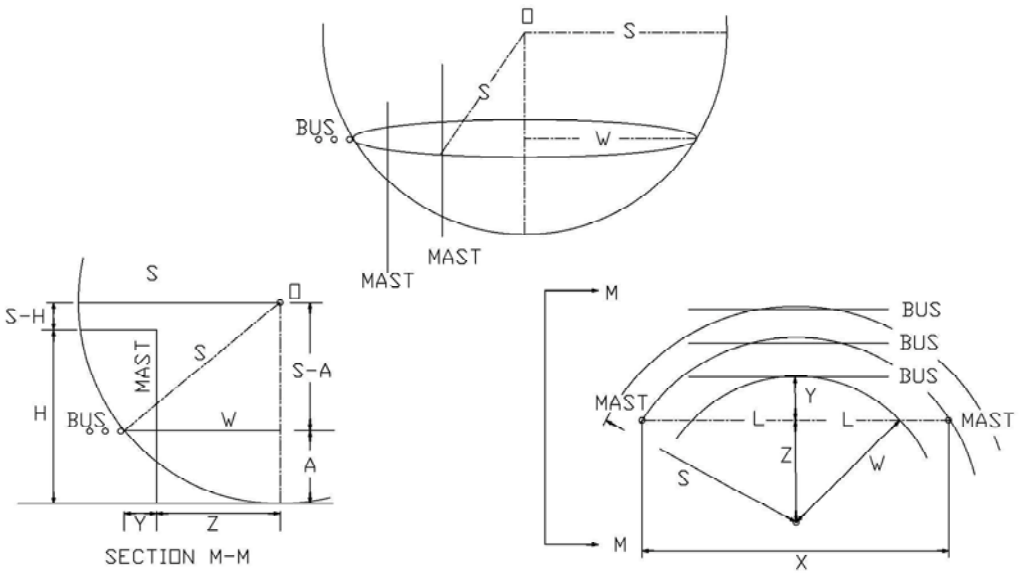

Maximum distance between masts for vertical stroke sphere supported by four masts

D must be less than or equal to *H* – *A* for protection at height *A*.

$D_1 = H - A_1$ $D_2 = H - A_2$ $D_3 = H - A_3$

$D_1 = 21.95m$ $D_2 = 24.41m$ $D_3 = 18.59m$

$E_1 = S - D_1$ $E_2 = S - D_2$ $E_3 = S - D_3$

$E_1 = 8.46m$ $E_2 = 6m$ $E_3 = 11.82m$

$J_1 = \sqrt{S^2 - E_1^2}$ $J_2 = \sqrt{S^2 - E_2^2}$ $J_3 = \sqrt{S^2 - E_3^2}$

$J_1 = 29.21m$ $J_2 = 29.81m$ $J_3 = 28.02m$

$K_1 = 2J_1$ $K_2 = 2J_2$ $K_3 = 2J_3$

$K_1 = 58.42m$ $K_2 = 57.62m$ $K_3 = 56.04m$

$P_1 = \frac{K_1}{\sqrt{2}}$ $P_2 = \frac{K_2}{\sqrt{2}}$ $P_3 = \frac{K_3}{\sqrt{2}}$

$P_1 = 41.31m$ $P_2 = 40.74m$ $P_2 = 39.63m$

These values are the maximum spacing of four masts for protection at the three bus heights *A*.

Copyright © 2013 IEEE. All rights reserved.

Copyright The Institute of Electrical and Electronics Engineers, Inc.
Provided by IHS under license with IEEE
No reproduction or networking permitted without license from IHS

Order Number: 02120914
Sold to:EGAT [700166108393] - VARRIS.Y@EGAT.CO.TH,
Not for Resale,2016-09-15 03:57:48 UTC

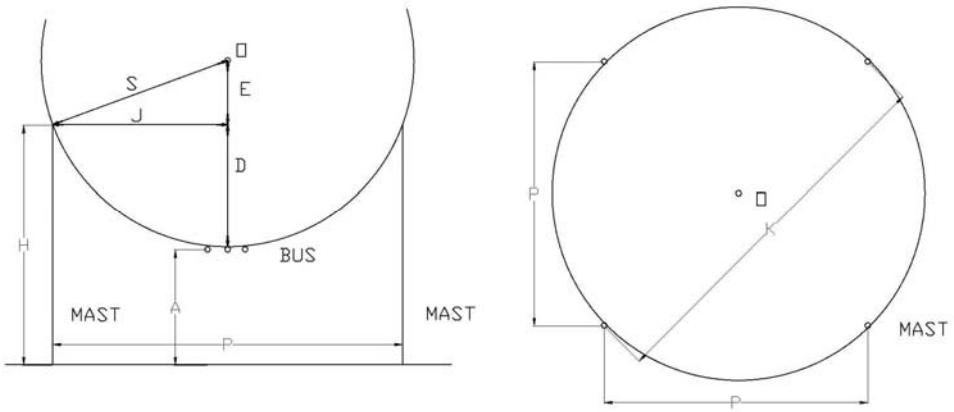

Maximum distance between masts for vertical strike sphere supported by three masts

$$Q_1 = 2\cos\left(\frac{30\pi}{180}\right)J_1 \qquad Q_2 = 2\cos\left(\frac{30\pi}{180}\right)J_2 \qquad Q_3 = 2\cos\left(\frac{30\pi}{180}\right)J_3$$

$$Q_1 = 50.59m \qquad Q_2 = 51.63m \qquad Q_3 = 48.53m$$

However, *Q* shall not be greater than *X*.

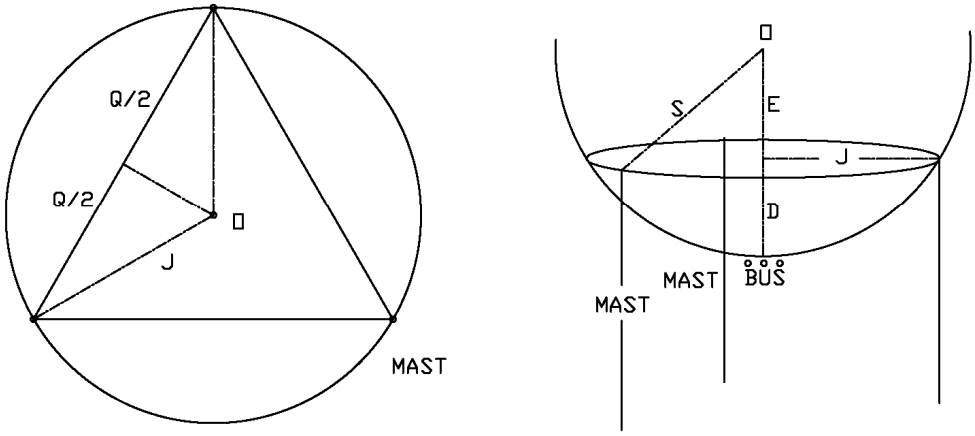

Copyright © 2013 IEEE. All rights reserved.
Copyright The Institute of Electrical and Electronics Engineers, Inc.
Provided by IHS under license with IEEE
No reproduction or networking permitted without license from IHS
Order Number: 02120914
Sold to:EGAT [700166108393] - VARRIS.Y@EGAT.CO.TH,
Not for Resale,2016-09-15 03:57:48 UTC

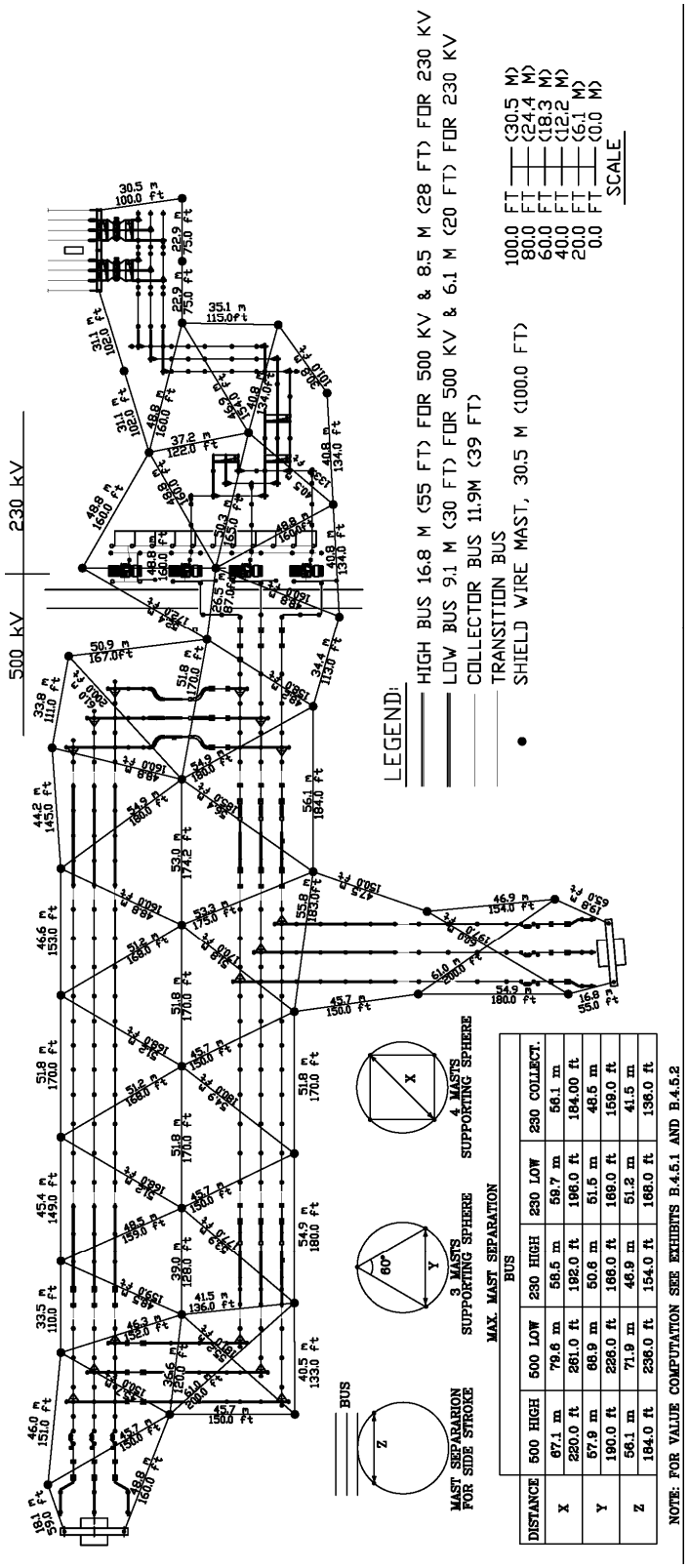

MAX. MAST SEPARATION BUS

DISTANCE	500 HIGH	500 LOW	230 HIGH	230 LOW	230 COLLECT.
X	67.1 m	79.6 m	58.5 m	59.7 m	56.1 m
	220.0 ft	261.0 ft	192.0 ft	196.0 ft	184.00 ft
Y	67.9 m	88.9 m	50.6 m	51.5 m	48.6 m
	190.0 ft	226.0 ft	166.0 ft	169.0 ft	159.0 ft
Z	56.1 m	71.9 m	46.9 m	51.2 m	41.5 m
	184.0 ft	236.0 ft	154.0 ft	168.0 ft	136.0 ft

NOTE: FOR VALUE COMPUTATION SEE EXHIBITS B.4.5.1 AND B.4.5.2

Figure B.24—Shielding a 500/230 kV substation using the rolling sphere method

Copyright © 2013 IEEE. All rights reserved.

Copyright The Institute of Electrical and Electronics Engineers, Inc.
Provided by IHS under license with IEEE
No reproduction or networking permitted without license from IHS

Order Number: 02120914
Sold to:EGAT [700166108393] - VARRIS.Y@EGAT.CO.TH,
Not for Resale,2016-09-15 03:57:48 UTC

B.4.5.3 Calculations for a 500 kV substation with shield wires

500 kV substation example—protection by shield wires (30.48 m)

$Z_s = 336\Omega$ $BIL = 1800kV$

$$I_s = \frac{BIL \times 2.2}{Z_s}$$ Equation (18)

$I_s = 11.786kA$

$k = 1.0$

$$S = 8kI_s^{0.65}$$ Equation (17)

$S = 39.76m$

Assumed wire height: $H = 30.48m$

$A_1 = 16.76m$ $A_2 = 9.14m$

$R = \sqrt{S^2 - (S-H)^2}$

$R = 38.66m$

$T_1 = \sqrt{S^2 - (S-A_1)^2}$ $T_2 = \sqrt{S^2 - (S-A_2)^2}$

$T_1 = 32.43m$ $T_2 = 25.36m$

$C_1 = R - T_1$ $C_2 = R - T_2$

$C_1 = 6.36m$ $C_2 = 13.3m$

These values are the maximum horizontal separation of shield wire and bus for protection at bus height A.

Copyright © 2013 IEEE. All rights reserved.

Copyright The Institute of Electrical and Electronics Engineers, Inc.
Provided by IHS under license with IEEE
No reproduction or networking permitted without license from IHS

Order Number: 02120914
Sold to:EGAT [700166108393] - VARRIS.Y@EGAT.CO.TH,
Not for Resale,2016-09-15 03:57:48 UTC

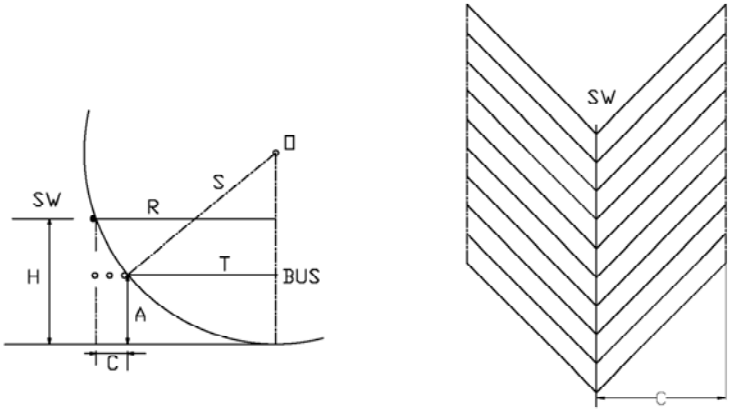

Maximum distance between two wires for vertical stroke

D must be less than or equal to *H* – *A* for protection at height *A*.

$D_1 = H - A_1$ $D_2 = H - A_2$

$D_1 = 13.72m$ $D_2 = 21.31m$

$E_1 = S - D_1$ $E_2 = S - D_2$

$E_1 = 26.04m$ $E_2 = 18.45m$

$L_1 = \sqrt{S^2 - E_1^2}$ $L_2 = \sqrt{S^2 - E_2^2}$

$L_1 = 30.05m$ $L_2 = 35.22m$

$X_1 = 2L_1$ $X_2 = 2L_2$

$X_1 = 60.1m$ $X_2 = 70.44m$

These values are the maximum separation of shield wires for protection at bus height *A*.

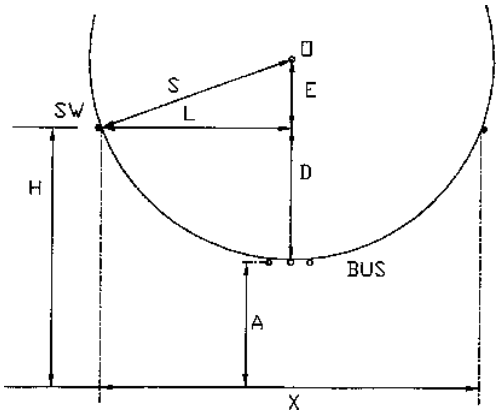

Copyright © 2013 IEEE. All rights reserved.

Copyright The Institute of Electrical and Electronics Engineers, Inc.
Provided by IHS under license with IEEE
No reproduction or networking permitted without license from IHS

Order Number: 02120914
Sold to:EGAT [700166108393] - VARRIS.Y@EGAT.CO.TH,
Not for Resale,2016-09-15 03:57:48 UTC

B.4.5.4 Calculations for a 230 kV substation with shield wires

230 kV substation example—protection by shield wires (30.48 m)

$Z_s = 336\Omega$ $BIL = 900kV$

$$I_s = \frac{BIL \times 2.2}{Z_s}$$ Equation (18)

$I_s = 5.893kA$

$k = 1.0$

$$S = 8kI_s^{0.65}$$ Equation (17)

$S = 25.34m$

Assumed wire height: $H = 30.48m$

Height bus 230 kV bus #1: Height of 230 kV bus #2: Height of 230 kV bus #3:

$A_1 = 8.53m$ $A_2 = 6.07m$ $A_3 = 11.89m$

$R = \sqrt{S^2 - (S-H)^2}$

$R = 24.81m$

$T_1 = \sqrt{S^2 - (S-A_1)^2}$ $T_2 = \sqrt{S^2 - (S-A_2)^2}$ $T_3 = \sqrt{S^2 - (S-A_3)^2}$

$T_1 = 18.96m$ $T_2 = 16.46m$ $T_3 = 21.48m$

$C_1 = R - T_1$ $C_2 = R - T_2$ $C_3 = R - T_3$

$C_1 = 5.85m$ $C_2 = 8.35m$ $C_3 = 3.33m$

These values are the maximum horizontal separation of shield wire and bus for protection at bus height *A*.

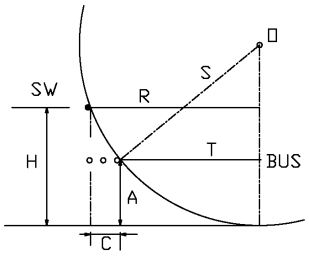

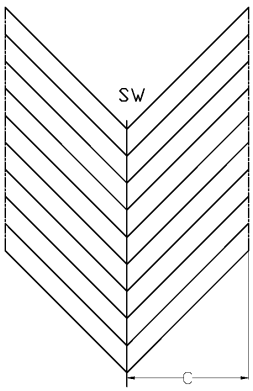

Copyright © 2013 IEEE. All rights reserved.

Copyright The Institute of Electrical and Electronics Engineers, Inc.
Provided by IHS under license with IEEE
No reproduction or networking permitted without license from IHS

Order Number: 02120914
Sold to:EGAT [700166108393] - VARRIS.Y@EGAT.CO.TH,
Not for Resale,2016-09-15 03:57:48 UTC

Maximum distance between two wires for vertical stroke

D must be less than or equal to *H* – *A* for protection at height *A*.

$D_1 = H - A_1$ $D_2 = H - A_2$ $D_3 = H - A_3$

$D_1 = 21.95m$ $D_2 = 24.41m$ $D_3 = 18.59m$

$E_1 = S - D_1$ $E_2 = S - D_2$ $E_3 = S - D_3$

$E_1 = 3.39m$ $E_2 = 0.93m$ $E_3 = 6.75m$

$L_1 = \sqrt{S^2 - E_1^2}$ $L_2 = \sqrt{S^2 - E_2^2}$ $L_3 = \sqrt{S^2 - E_3^2}$

$L_1 = 25.11m$ $L_2 = 25.32m$ $L_3 = 24.42m$

$X_1 = 2L_1$ $X_2 = 2L_2$ $X_3 = 2L_3$

$X_1 = 50.22m$ $X_2 = 50.64m$ $X_3 = 48.84m$

These values are the maximum separation of shield wires for protection at bus height *A*.

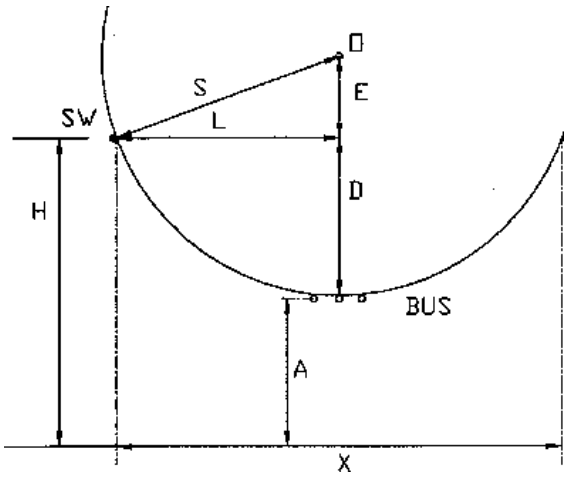

Copyright © 2013 IEEE. All rights reserved.
Copyright The Institute of Electrical and Electronics Engineers, Inc.
Provided by IHS under license with IEEE
No reproduction or networking permitted without license from IHS
Order Number: 02120914
Sold to:EGAT [700166108393] - VARRIS.Y@EGAT.CO.TH,
Not for Resale,2016-09-15 03:57:48 UTC

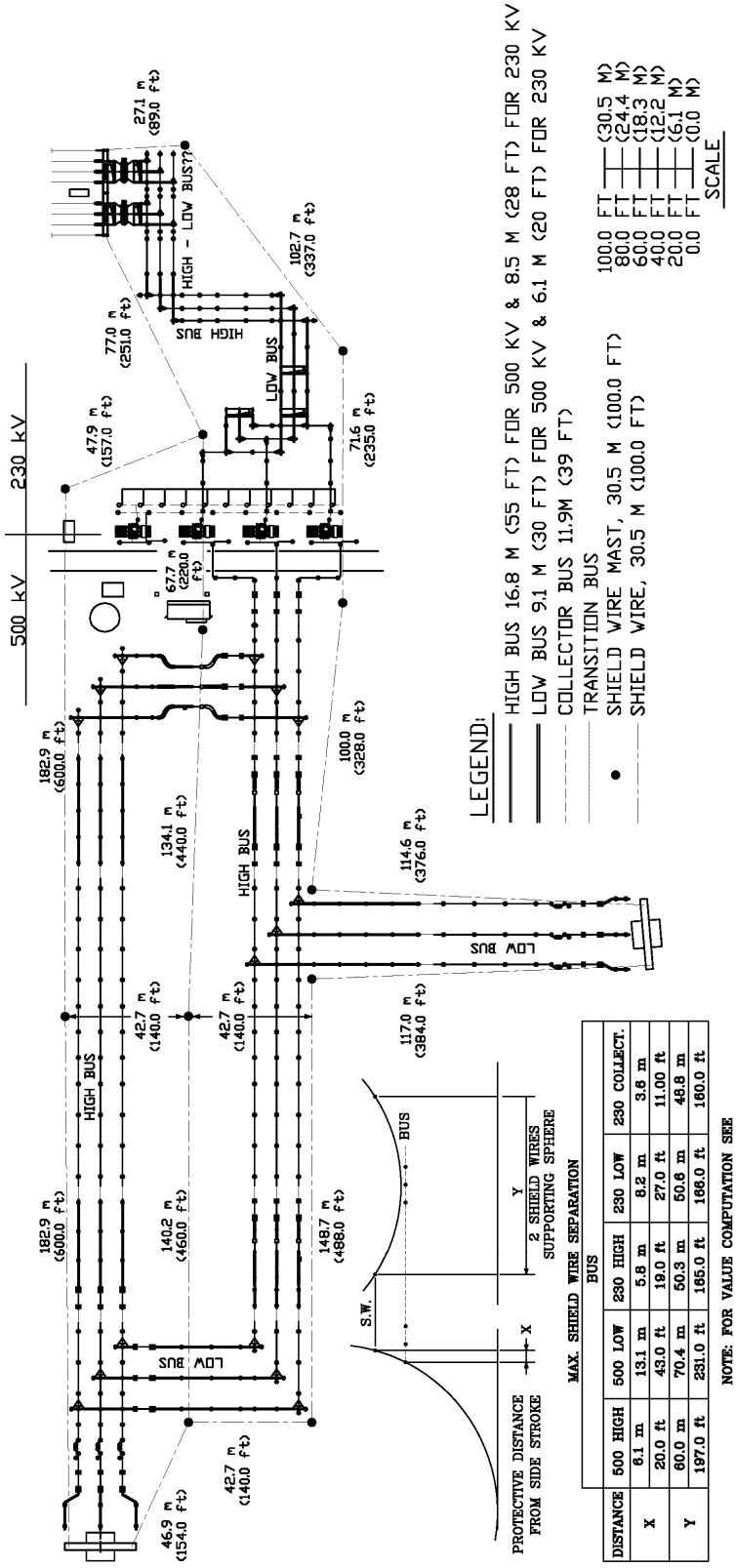

DISTANCE		BUS 500 HIGH	500 LOW	230 HIGH	230 LOW	230 COLLECT.
X		6.1 m	13.1 m	5.8 m	8.2 m	3.6 m
		20.0 ft	43.0 ft	19.0 ft	27.0 ft	11.00 ft
Y		60.0 m	70.4 m	50.3 m	50.6 m	48.8 m
		197.0 ft	231.0 ft	165.0 ft	166.0 ft	160.0 ft

Figure B.25—Shielding a 500/230 kV substation with shield wires using the rolling sphere method

Copyright © 2013 IEEE. All rights reserved.

Copyright The Institute of Electrical and Electronics Engineers, Inc.
Provided by IHS under license with IEEE
No reproduction or networking permitted without license from IHS

Order Number: 02120914
Sold to:EGAT [700166108393] - VARRIS.Y@EGAT.CO.TH,
Not for Resale,2016-09-15 03:57:48 UTC

Table B.5—Summary of lightning protection calculations by the rolling sphere method shield wires—30.48 m (100 ft) high wire: separation of wires for protection against vertical strikes

Calculations	Shield wire height (m/ft)	Collector (m/ft)	Wire separation for high bus (m/ft)	Wire eparation for low bus (m/ft)	Type of stroke
B.4.5.3	30.48/100	-	60.05/197	70.41/231	Vertical
B.4.5.3	30.48/100	-	6.10/20	13.41/44	Side
B.4.5.3	30.48/100	48.77/160	50.29/165	50.60/166	Vertical
B.4.5.3	30.48/100	3.35/11	5.79/19	8.23/27	Side
B.4.5.4	18.29/60	-	29.26/96	29.57/97	Vertical
B.4.5.4	18.29/60	-	2.74/9	3.96/13	Side
B.4.5.4	12.19/40	-	24.38/80	26.21/86	Vertical
B.4.5.4	12.1940	-	2.74/9	2.27/14	Side

Table B.6—Summary of lightning protection calculations by the rolling sphere method masts. Separation of masts for protection against vertical strikes.

Calculations	Mast height (m/ft)	Collector (m/ft)	Mast separation for high bus (m/ft)	Mast separation for low bus (m/ft)	Type of stroke
B.4.5.1	30.48/100	-	56.08/184	71.93/236	Side
B.4.5.1	30.48/100	-	67.10/220	79.55/261	Vertical (4 masts)
B.4.5.1	30.48/100	-	57.91/190	68.88/226	Vertical (3 masts)
B.4.5.2	30.48/100	41.45/136	46.94/154	51.21/168	Side
B.4.5.2	30.48/100	56.08/184	58.52/192	59.74/196	Vertical (4 masts)
B.4.5.2	30.48/100	48.46/159	50.60/166	51.51/169	Vertical (3 masts)
B.4.3	18.29/60	-	25.60/84	28.35/93	Side
B.4.3	18.29/60	-	33.83/111	34.75/114	Vertical (4 masts)
B.4.3	18.29/60		29.26/96	29.87/98	Vertical (3 masts)

B.5 The Eriksson EGM examples

B.5.1 69 kV distribution substation model utilizing the Eriksson EGM with mast structures

Determine the substation design criteria. Is the substation a standard layout, or does it have critical parameters? Determine if side stroke protection is warranted. This example will assume a standard distribution layout for a domed shielding design. Figure B.26 shows the layout and dimensions. The following is the R_a calculations for a mast in meters. I_s is set equal to I_c which is from Equation (18) in kA which is 2.567 kA for the 69 kV substation with the values below.

$$Z_s = 300\ \Omega \qquad BIL = 350\ \text{kV}$$

$$I_s = \frac{BILx1.1}{(Z_s/2)} = \frac{2.2(BIL)}{Z_s}$$

Copyright © 2013 IEEE. All rights reserved.

Copyright The Institute of Electrical and Electronics Engineers, Inc.
Provided by IHS under license with IEEE
No reproduction or networking permitted without license from IHS

Order Number: 02120914
Sold to:EGAT [700166108393] - VARRIS.Y@EGAT.CO.TH,
Not for Resale,2016-09-15 03:57:48 UTC

$$I_s = \frac{2.2(350\ \text{kV})}{300\ \Omega} = 2.567\ \text{kA}$$

Utilize Equation (23) in meters to solve for the R_a for all critical equipment structures within the substation to be protected. Continue this process for all the equipment in question. The perimeter fencing is assumed to be 10 ft tall chain link as a reference. Table B.7 is the product of the tabulation for the design layout from Figure B.26.

$$R_{a,m} = 0.84\, H^{0.6}\, I^{0.74}$$

$$R_{a,m} = 0.84(10.1\ \text{m})^{0.6}(2.567)^{0.74} = 6.8\ \text{m}$$

Table B.7—69 kV distribution substation (Eriksson EGM) R_a and R_g for structures of equipment to be protected

Equipment	Y_c in meters	Y_c in feet	R_a in meters	R_g in feet
Switch	10.1	33.0	6.8	22.1
High bus and equipment	5.8	19.0	4.8	15.9
Low bus	4.3	14.0	4.0	13.2

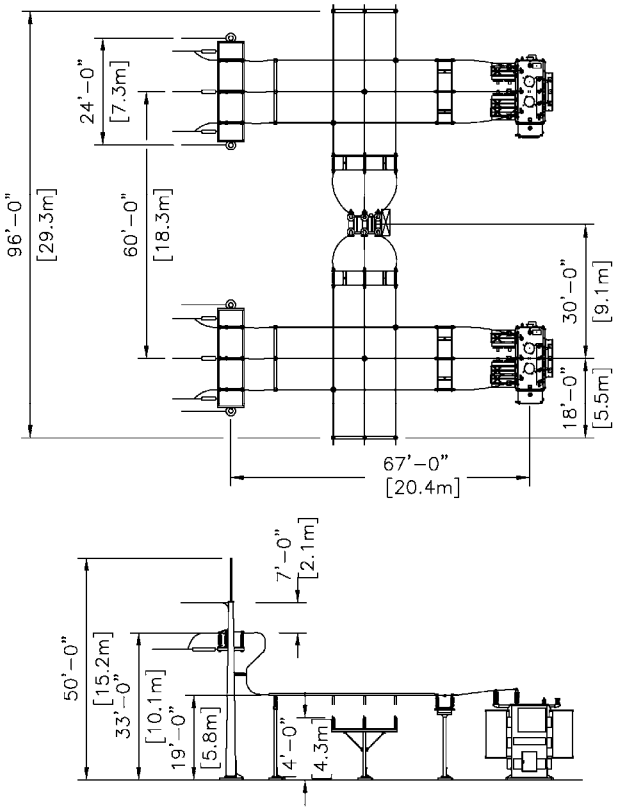

Figure B.26—Distribution substation base layout with dimensions for the Eriksson EGM examples

Copyright © 2013 IEEE. All rights reserved.

Copyright The Institute of Electrical and Electronics Engineers, Inc.
Provided by IHS under license with IEEE
No reproduction or networking permitted without license from IHS

Order Number: 02120914
Sold to:EGAT [700166108393] - VARRIS.Y@EGAT.CO.TH,
Not for Resale,2016-09-15 03:57:48 UTC

B.5.1.1 69 kV distribution substation model utilizing the Eriksson EGM with 15.2 m (50 ft) and 18.3 m (60 ft) mast structures for a domed shielding design

Determine by company policy, standards, or customer criteria if static shield wiring can be placed over energized equipment or bus. Determine the type of shielding to be used for the substation: masts, static wires, or both. Place the R_a for the equipment on the plan and elevation section views from Table B.7. Place the bus R_a for the center phase and end of bus structures. Mark all areas of conflict where shielding cannot be placed, such as future bays, transmission drops, roads, limited truck or crane access, within fire zones, complex buswork arrangements, etc. Calculate the R_a for the shielding mast structures from Equation (23). In this example we will be using an 18.3 m (60 ft) and 15.2 m (50 ft) mast for shielding protection, see Table B.8 below. An arc or domed shielding design with staggered structure heights and placement can be used to provide additional shielding protection options for unusual terrain and circumstances. Place the mast to maintain access and avoid conflicts with buswork. Maintain minimum spacing for the voltage class for bus to grounded structures. Generally, place the masts between the property line and the equipment to be protected first, then add additional shielding masts between equipment to cover the site. See Figure B.27 for the pole placement and design layout. Adjust the masts until the R_a for all equipment is covered.

$$R_{a,m} = 0.84\, H^{0.6}\, I^{0.74}$$

$$R_{a,m} = 0.84(18.3\text{ m})^{0.6}(2.567)^{0.74} = 9.7\text{ m}$$

Table B.8—69 kV distribution substation (Eriksson EGM) R_a for shielding structures and masts to protect equipment

Equipment	Y_g in meters	Y_g in feet	R_a in meters	R_a in feet
Tall interior mast	18.3	60.0	9.7	31.7
Short exterior mast	15.2	50.0	8.6	28.4
Incoming tower	12.2	40.0	7.6	24.8
Tower with mast	15.2	50.0	8.6	28.4

Copyright © 2013 IEEE. All rights reserved.
Copyright The Institute of Electrical and Electronics Engineers, Inc.
Provided by IHS under license with IEEE
No reproduction or networking permitted without license from IHS
Order Number: 02120914
Sold to:EGAT [700166108393] - VARRIS.Y@EGAT.CO.TH,
Not for Resale,2016-09-15 03:57:48 UTC

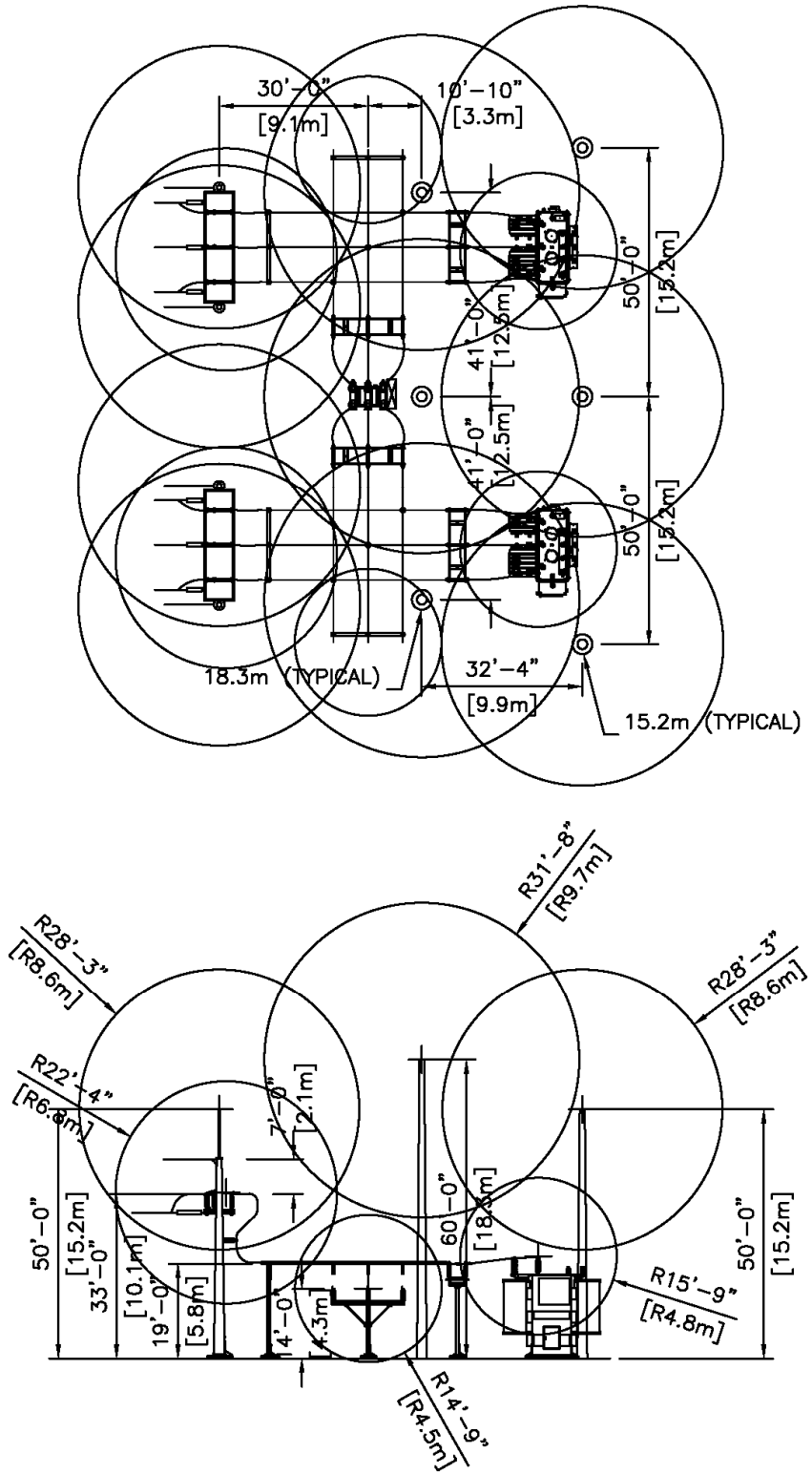

Figure B.27—69 kV distribution substation design layout with dimensions for the Eriksson EGM example with a domed mast structures

Copyright © 2013 IEEE. All rights reserved.

Copyright The Institute of Electrical and Electronics Engineers, Inc.
Provided by IHS under license with IEEE
No reproduction or networking permitted without license from IHS

Order Number: 02120914
Sold to:EGAT [700166108393] - VARRIS.Y@EGAT.CO.TH,
Not for Resale,2016-09-15 03:57:48 UTC

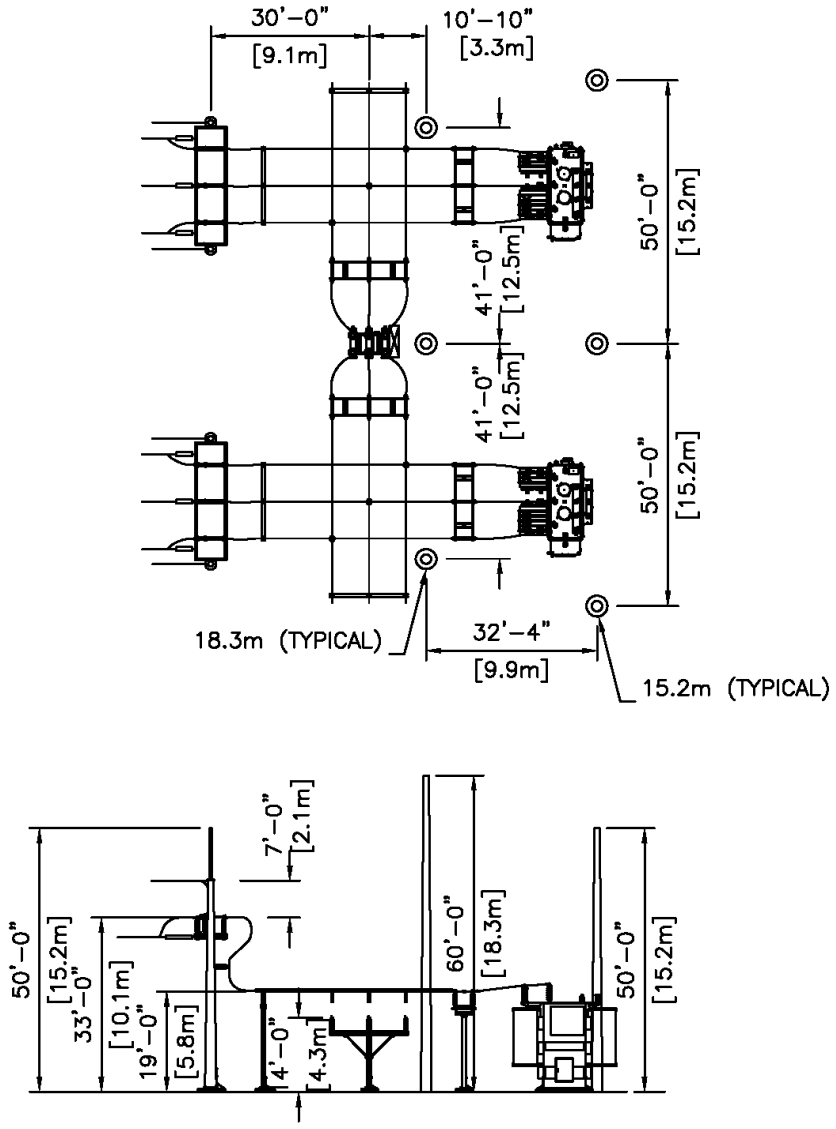

Figure B.28—69 kV distribution substation design layout for the Eriksson EGM example with a domed mast structures

B.5.2 69 kV distribution substation model utilizing the Eriksson EGM with static wire structures

Determine the substation design criteria. Is the substation a standard layout, or does it have critical parameters? Determine if side stroke protection is warranted. This example will assume a standard distribution layout for shielding design. Figure B.26 shows the layout and dimensions. The following is the R_a calculations for a static wire conductors in meters. I_s is set equal to I_c which is from Equation (18) in kA which is 2.567 kA for the 69 kV substation with the values below.

$Z_S = 300\ \Omega \qquad BIL = 350\ \text{kV}$

Copyright © 2013 IEEE. All rights reserved.

Copyright The Institute of Electrical and Electronics Engineers, Inc.
Provided by IHS under license with IEEE
No reproduction or networking permitted without license from IHS

Order Number: 02120914
Sold to:EGAT [700166108393] - VARRIS.Y@EGAT.CO.TH,
Not for Resale,2016-09-15 03:57:48 UTC

$$I_s = \frac{BILx1.1}{(Z_s/2)} = \frac{2.2(BIL)}{Z_s}$$

$$I_s = \frac{2.2(350\text{ kV})}{300\ \Omega} = 2.567\text{ kA}$$

Utilize Equation (23) to solve for the R_a for all critical equipment structures within the substation to be protected. Continue this process for all the equipment in question. The perimeter fencing is assumed to be 10 ft tall chain link as a reference. Table B.9 is the product of the tabulation for the design layout from Figure B.26.

$$R_{a,m} = 0.84\,H^{0.6}\,I^{0.74}$$

$$R_{a,m} = 0.84(10.1\text{ m})^{0.6}(2.567)^{0.74} = 6.8\text{ m}$$

Table B.9—69 kV distribution substation (Eriksson EGM) R_a for structures of equipment to be protected

Equipment	Y_c in meters	Y_c in feet	R_a in meters	R_a in feet
Switch	10.1	33.0	6.8	22.1
High bus and equipment	5.8	19.0	4.8	15.9
Low bus	4.3	14.0	4.0	13.2

B.5.2.1 69 kV distribution substation model utilizing the Eriksson EGM with static wire structures for shielding design

Determine by company policy, standards, or customer criteria if static shield wiring can be placed over energized equipment or bus. Determine the type of shielding to be used for the substation: masts, static wires, or both. Place the R_a for the equipment on the plan and elevation section views from Table B.9. Place the bus R_a for the center phase and end of bus structures. Mark all areas of conflict where shielding cannot be placed, such as future bays, transmission drops, roads, limited truck or crane access, within fire zones, complex buswork arrangements, etc. Calculate the R_a for the shielding wire conductor structures from Equation (24). In this example we will be using a 21.3 m (70 ft) mast pole to support the static shielding wiring, and shielding wiring is to be placed for the equipment to be protected, see Table B.10 below.

Substation equipment can be protected by one or more shielding structures. For distribution and transmission substation, the electrical equipment is generally protected by up to four shielding structures due to the geometry of the site. A single shielding structure can provide a canopy cover design, but might provide only marginal critical design coverage for I_s less than 4 kA.

Place the mast to maintain access and avoid conflicts with bus. Maintain minimum spacing for the voltage class for bus to grounded structures. Generally, place the masts between the property line and the equipment to be protected first, then add additional shielding masts between equipment to cover the site. Adjust the masts until the R_a for all equipment is covered. Check that all area is covered by the shield wires

Copyright © 2013 IEEE. All rights reserved.
Copyright The Institute of Electrical and Electronics Engineers, Inc.
Provided by IHS under license with IEEE
No reproduction or networking permitted without license from IHS
Order Number: 02120914
Sold to:EGAT [700166108393] - VARRIS.Y@EGAT.CO.TH,
Not for Resale,2016-09-15 03:57:48 UTC

by copying parallel from the shorted wire attachment point. See Figure B.29 and Figure B.30 for the pole placement and design layout.

$$R_{a,m} = 0.67\, H^{0.6}\, I^{0.74}$$

$$R_{a,m} = 0.67\,(21.3\ \text{m})^{0.6}\,(2.567)^{0.74} = 8.4\ \text{m}$$

Table B.10—69 kV distribution substation (Eriksson EGM) R_a for shielding structures and masts to protect equipment

Equipment	Y_g in meters	Y_g in feet	R_a in meters	R_a in feet
Tall interior mast	21.3	70.0	8.4	27.7
Incoming tower	12.2	40.0	6.0	19.8
Tower with mast	15.2	50.0	6.9	22.6

Copyright © 2013 IEEE. All rights reserved.

Copyright The Institute of Electrical and Electronics Engineers, Inc.
Provided by IHS under license with IEEE
No reproduction or networking permitted without license from IHS

Order Number: 02120914
Sold to:EGAT [700166108393] - VARRIS.Y@EGAT.CO.TH,
Not for Resale,2016-09-15 03:57:48 UTC

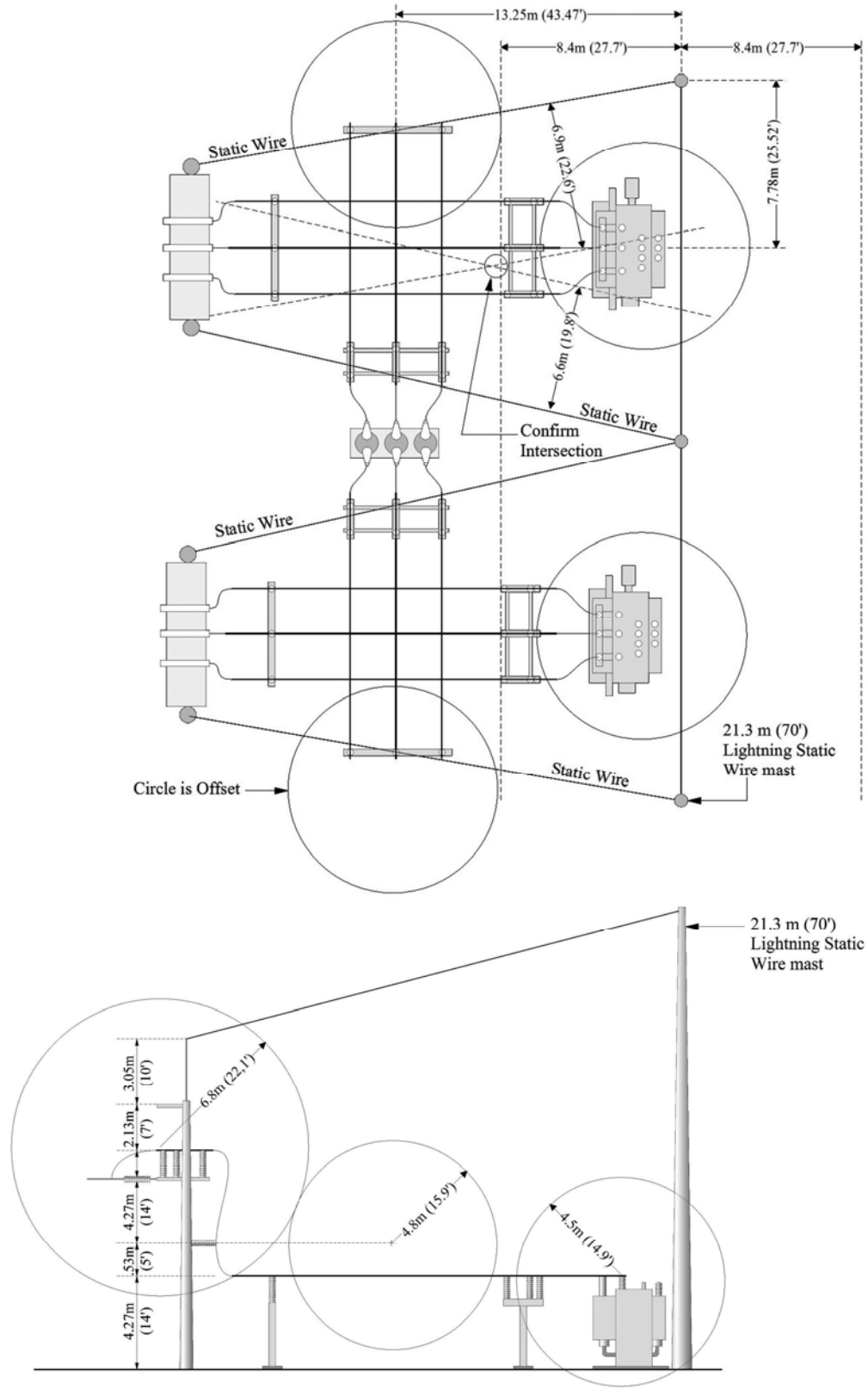

Figure B.29—69 kV distribution substation design layout with dimensions for the Eriksson EGM example with a domed static wire structures

Copyright © 2013 IEEE. All rights reserved.

Copyright The Institute of Electrical and Electronics Engineers, Inc.
Provided by IHS under license with IEEE
No reproduction or networking permitted without license from IHS

Order Number: 02120914
Sold to:EGAT [700166108393] - VARRIS.Y@EGAT.CO.TH,
Not for Resale,2016-09-15 03:57:48 UTC

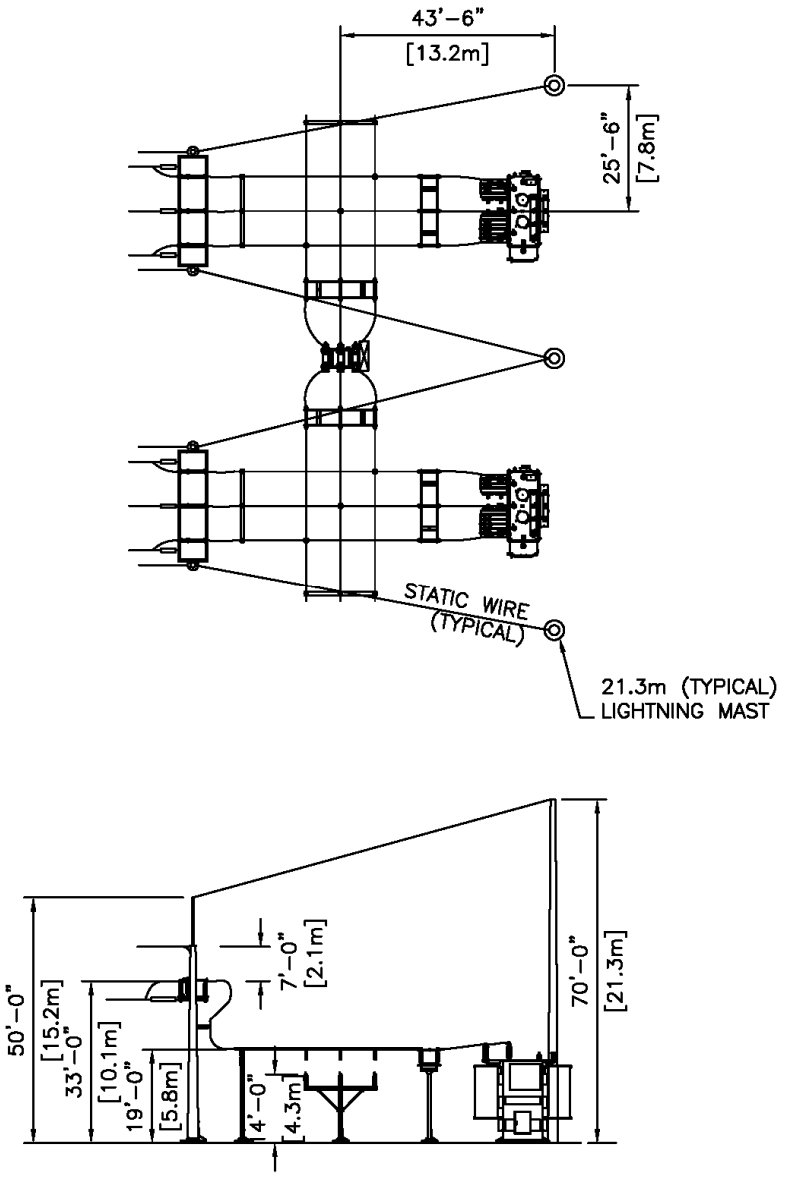

Figure B.30—69 kV distribution substation design layout for the Eriksson EGM example with a domed static wire structures

B.5.3 69 kV distribution substation model utilizing the Eriksson EGM with the combination of masts and static wire structures

By combining the properties of both masts and static wiring shielding, design layouts can be used to eliminate static wiring over energized buss. Static shielding wires can be placed lower on masts to provide side lightning protects while masts might be raised within the same design area. An arc or domed shielding design with staggered structure heights and placement can be used to provide additional shielding protection options for unusual terrain and circumstances. If the radii of attraction R_a are greater than the mast height, in theory all lightning strikes will likely hit the ground or the shielding structure. Additional side lightning protection is not required but might be desired by the design criteria. Determine the substation design criteria. Is the substation a standard layout, or does it have critical parameters? Determine if side stroke protection is warranted. This example will assume a standard distribution layout for shielding

Copyright © 2013 IEEE. All rights reserved.

Copyright The Institute of Electrical and Electronics Engineers, Inc.
Provided by IHS under license with IEEE
No reproduction or networking permitted without license from IHS

Order Number: 02120914
Sold to:EGAT [700166108393] - VARRIS.Y@EGAT.CO.TH,
Not for Resale,2016-09-15 03:57:48 UTC

design. Figure B.26 shows the layout and dimensions. The following is the R_a calculations for a static wire conductors in meters and masts in meters. I_s is set equal to I_c which is from Equation (18) in kA which is 2.567 kA for the 69 kV substation with the values below.

$$Z_s = 300\ \Omega \qquad BIL = 350\ \text{kV}$$

$$I_s = \frac{BILx1.1}{(Z_s/2)} = \frac{2.2(BIL)}{Z_s}$$

$$I_s = \frac{2.2(350\ kV)}{300\ \Omega} = 2.567\ kA$$

Utilize Equation (23) in meters to solve for the R_a for all critical equipment structures within the substation to be protected. Continue this process for all the equipment in question. The perimeter fencing is assumed to be 10 ft tall chain link. Table B.11 is the product of the tabulation for the design layout from Figure B.26.

$$R_{a,m} = 0.84\,H^{0.6}\,I^{0.74}$$

$$R_{a,m} = 0.84\left(10.1\ \text{m}\right)^{0.6}\left(2.567\right)^{0.74} = 6.7\ \text{m}$$

B.5.3.1 69 kV distribution substation model utilizing the Eriksson EGM with the combination of masts and static wire structures for shielding design

Determine by company policy, standards, or customer criteria if static shield wiring can be placed over energized equipment or bus. Determine the type of shielding to be used for the substation: masts, static wires, or both. Place the R_a for the equipment on the plan and elevation section views from Table B.11. Place the bus R_a for the center phase and end of bus structures. Mark all areas of conflict where shielding cannot be placed, such as future bays, transmission drops, roads, limited truck or crane access, within fire zones, complex buswork arrangements, etc. Calculate the R_a for the shielding masts and shielding wire conductor structures from Equation (23). In this example we will be using a 21.3 m (70 ft) mast pole to support the static shielding wiring, shielding wiring is to be placed for the equipment to be protected, and an 18.3 m (60 ft) mast placed for interior buswork protection see Table B.12 below. This is to eliminate static wires from crossing bus and equipment.

See previous examples for more specific detailed calculations. Place the mast to maintain access and avoid conflicts with bus. Maintain minimum spacing for the voltage class for bus to grounded structures.

Table B.11—69 kV distribution substation (Eriksson EGM) R_a for structures of equipment to be protected

Equipment	Y_c in meters	Y_c in feet	R_a in meters	R_a in feet
Switch	10.1	33.0	6.8	22.1
High bus and equipment	5.8	19.0	4.8	15.9
Low bus	4.3	14.0	4.0	13.2

Generally, place the masts between the property line and the equipment to be protected first, and then add additional shielding masts between equipment to cover the site. Adjust the masts until the R_a for all

Copyright © 2013 IEEE. All rights reserved.
Copyright The Institute of Electrical and Electronics Engineers, Inc.
Provided by IHS under license with IEEE
No reproduction or networking permitted without license from IHS
Order Number: 02120914
Sold to:EGAT [700166108393] - VARRIS.Y@EGAT.CO.TH,
Not for Resale,2016-09-15 03:57:48 UTC

equipment is covered. Check that all area is covered by the shield wires by copying parallel from the shorted wire attachment point. See Figure B.31 to Figure B.33 for the pole placement and design layout.

$$R_{a,m} = 0.84\, H^{0.6}\, I^{0.74}$$

Table B.12—69 kV distribution substation (Eriksson EGM) R_a for mast and static wire structures used in combination to protected equipment

Equipment	*Yg* in meters	Y_g in feet	R_a in meters	R_a in feet
Mast structures (Equation (23))				
Tall exterior mast	21.3	70.0	10.6	34.7
Short interior mast	18.3	60.0	9.7	31.7
Incoming tower	12.2	40.0	7.6	24.8
Tower with mast	15.2	50.0	8.6	28.4
Static wire structures (Equation (24))				
Tall interior mast	21.3	70.0	8.4	27.7
Tower with mast	15.2	50.0	6.9	22.6

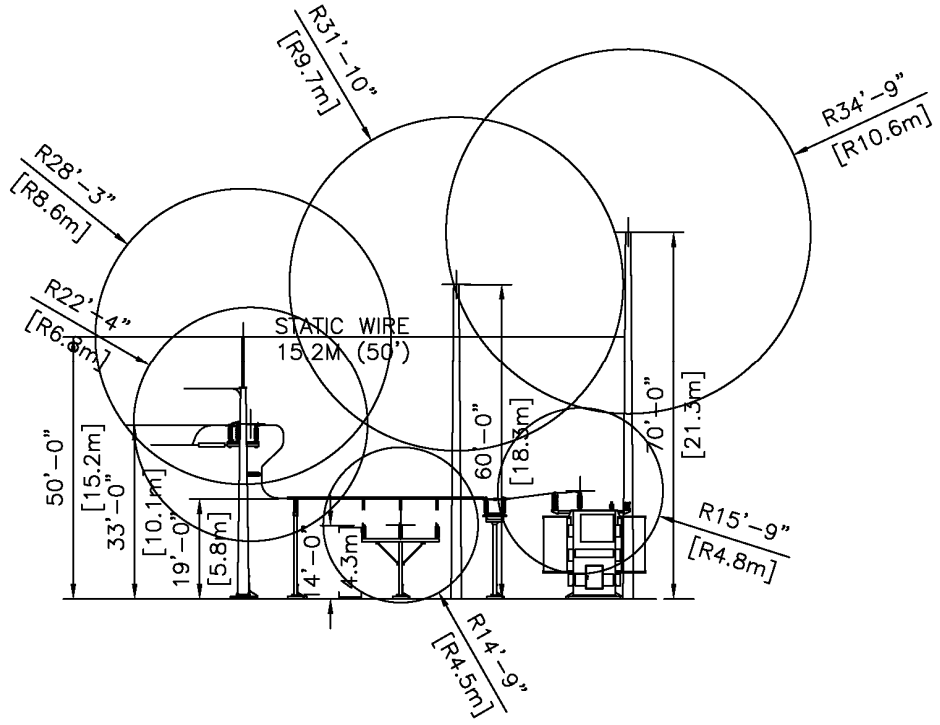

Figure B.31—69 kV distribution substation design elevation layout for the Eriksson EGM example with a combination of static wires and mast structures

Copyright © 2013 IEEE. All rights reserved.

Copyright The Institute of Electrical and Electronics Engineers, Inc.
Provided by IHS under license with IEEE
No reproduction or networking permitted without license from IHS

Order Number: 02120914
Sold to:EGAT [700166108393] - VARRIS.Y@EGAT.CO.TH,
Not for Resale,2016-09-15 03:57:48 UTC

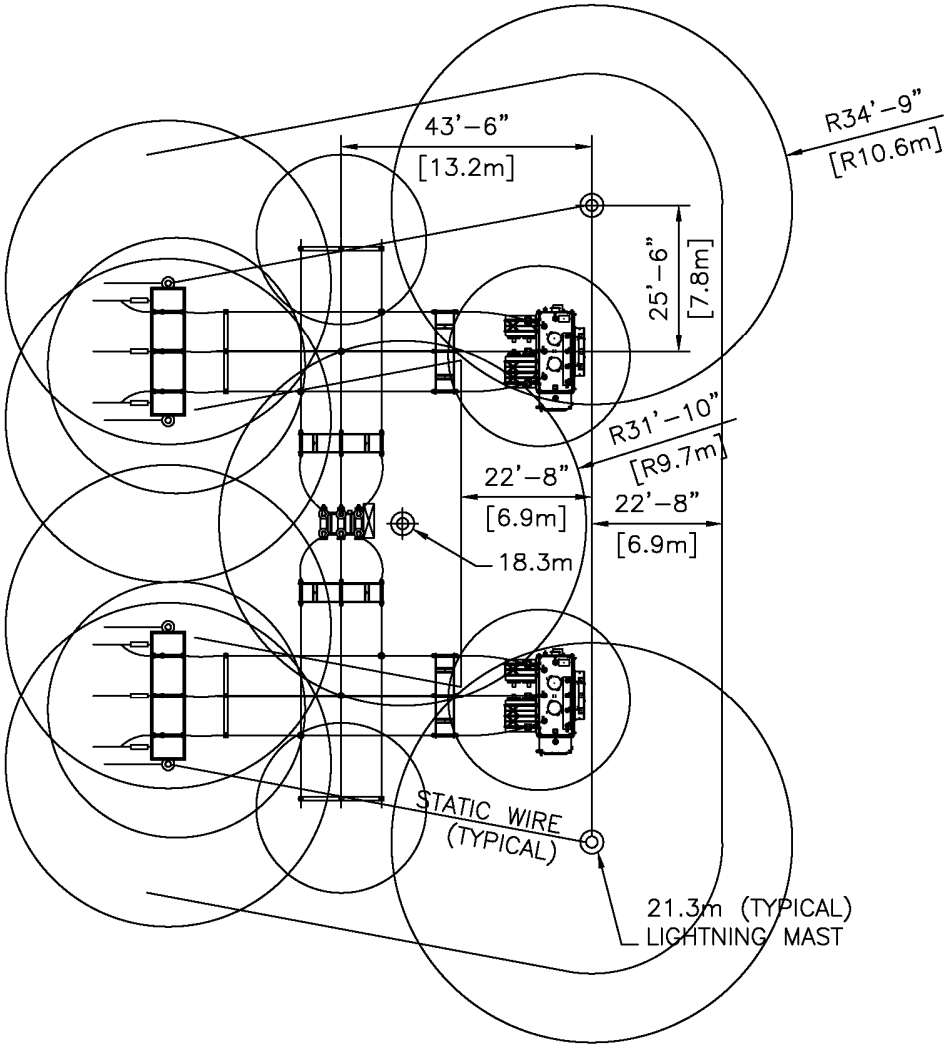

Figure B.32—69 kV distribution substation design plan layout for the Eriksson EGM example with a combination of static wires and mast structures

Copyright © 2013 IEEE. All rights reserved.

Copyright The Institute of Electrical and Electronics Engineers, Inc.
Provided by IHS under license with IEEE
No reproduction or networking permitted without license from IHS

Order Number: 02120914
Sold to:EGAT [700166108393] - VARRIS.Y@EGAT.CO.TH,
Not for Resale,2016-09-15 03:57:48 UTC

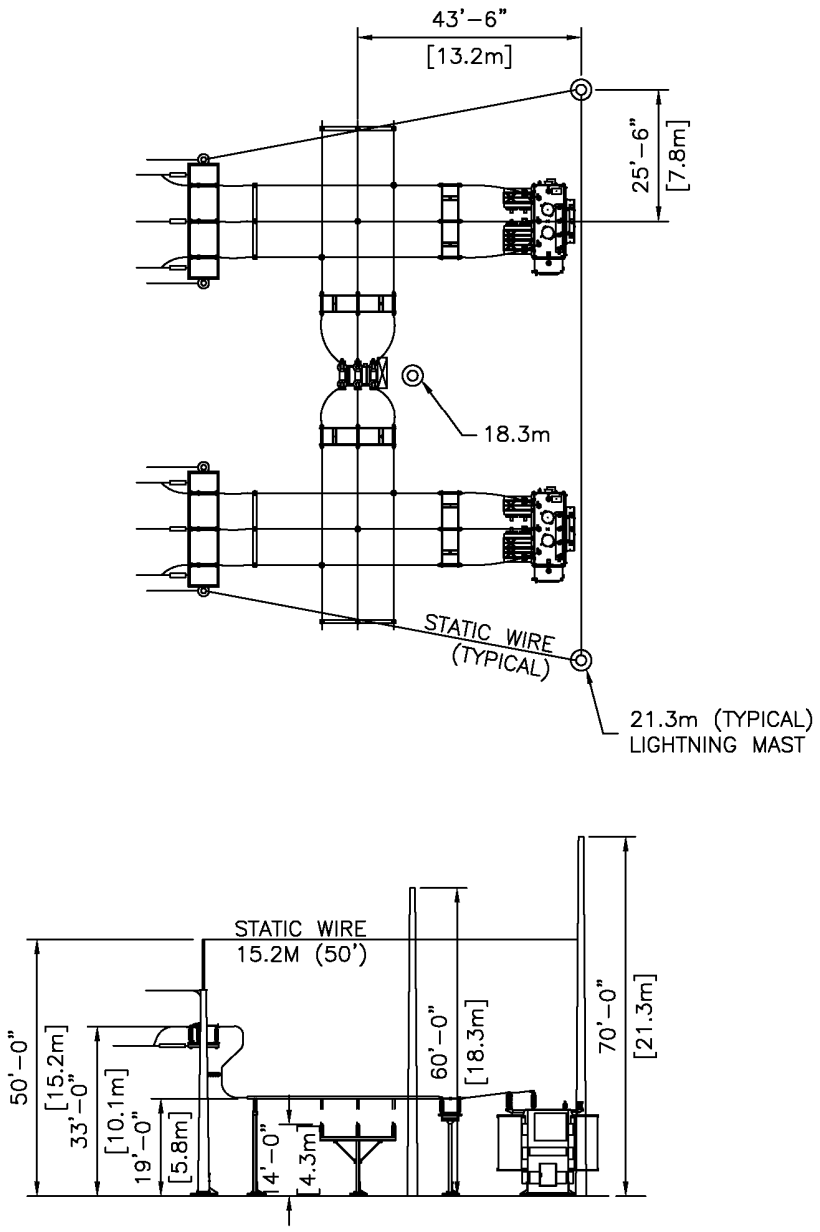

Figure B.33—69 kV distribution substation design final design layout for the Eriksson EGM example with a combination of static wires and mast structures

B.5.4 69 kV distribution substation model utilizing the Eriksson EGM with mast structures with side lightning strokes as a criteria

The following is an example for providing a shielding design where side lightning stroke protection is a criteria. This example will utilize mast structures only, but can be extended for static wire shielding and combination designs as well. For a distribution substation with a BIL below 550 kV and I_s less than 4 kA where side lightning stroke protection is critical, starting design mast or static wire height is generally twice the high bus height as is demonstrated in the following example. Figure B.26 shows the layout and dimensions for the substation. I_s is set equal to I_c which is from Equation (18) in kA which is 2.567 kA for the 69 kV substation with the values below.

Copyright © 2013 IEEE. All rights reserved.

Copyright The Institute of Electrical and Electronics Engineers, Inc.
Provided by IHS under license with IEEE
No reproduction or networking permitted without license from IHS

Order Number: 02120914
Sold to:EGAT [700166108393] - VARRIS.Y@EGAT.CO.TH,
Not for Resale,2016-09-15 03:57:48 UTC

$$Z_s = 300\ \Omega \qquad BIL = 350\ kV$$

$$I_s = \frac{BILx1.1}{(Z_s/2)} = \frac{2.2(BIL)}{Z_s}$$

$$I_s = \frac{2.2(350\ \text{kV})}{300\ \Omega} = 2.567\ \text{kA}$$

Utilize Equation (23) to solve for the R_a for all critical equipment structures within the substation to be protected. Continue this process for all the equipment in question. The perimeter fencing is assumed to be 10 ft high chain link as a reference. Table B.13 is the product of the tabulation for the design layout from Figure B.26.

$$R_{a,m} = 0.84\,H^{0.6}\,I^{0.74}$$

$$R_{a,m} = 0.84\left(10.1\ \text{m}\right)^{0.6}\left(2.567\right)^{0.74} = 6.8\ \text{m}$$

Table B.13—69 kV distribution substation (Eriksson EGM) R_a for structures of equipment to be protected

Equipment	Y_c in meters	Y_c in feet	R_a in meters	R_a in feet
Switch	10.1	33.0	6.8	22.1
High bus and equipment	5.8	19.0	4.8	15.9
Low bus	4.3	14.0	4.0	13.2

Copyright © 2013 IEEE. All rights reserved.
Copyright The Institute of Electrical and Electronics Engineers, Inc.
Provided by IHS under license with IEEE
No reproduction or networking permitted without license from IHS
Order Number: 02120914
Sold to:EGAT [700166108393] - VARRIS.Y@EGAT.CO.TH,
Not for Resale,2016-09-15 03:57:48 UTC

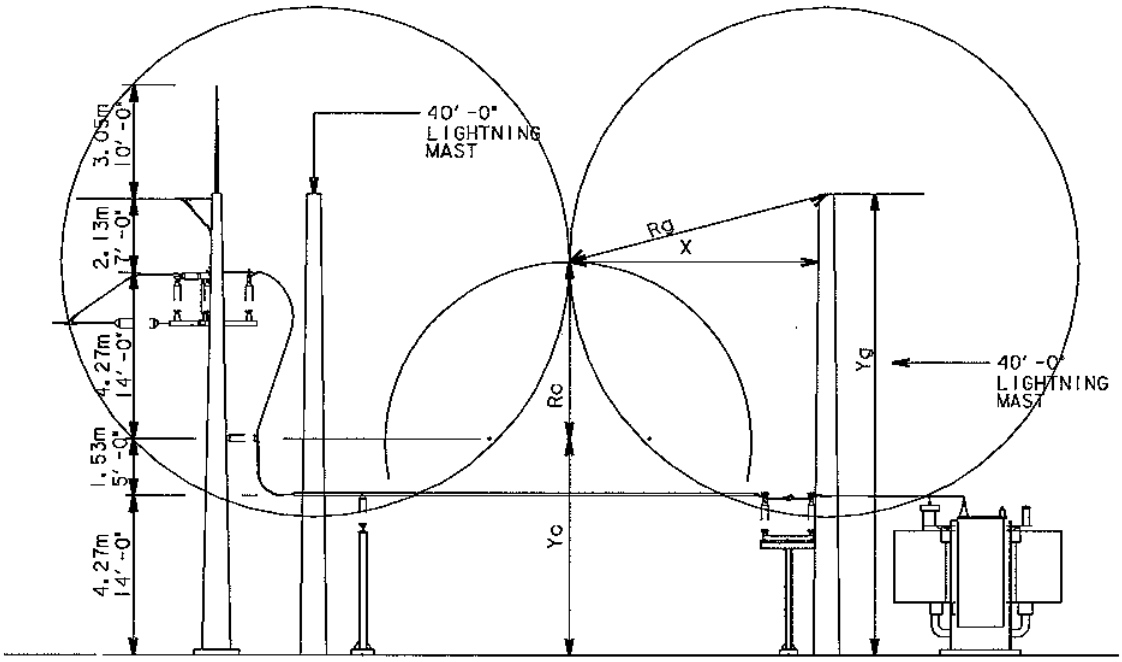

Figure B.34—69 kV distribution substation design elevation plan layout for the Eriksson EGM example with two shielding structures intersecting one point

B.5.4.1 69 kV distribution substation model utilizing the Eriksson EGM with mast structures solved for two mast intersection shielding design

The designer needs to begin by selecting a point on the plans where in mast shielding R_a will intersect. For this example the intersection of the center phase of the low and high bus is utilized. Figure 30 and Figure 36 describe the process to locate two masts or static wires alongside equipment to be protected. Equation (26) is used to solve for the maximum horizontal distance the shielding structure can be placed from the equipment being protected to provide horizontal side lightning protection for a single mast or static wire structure. In this example with short low-to-the-ground shielding structures, wind swing or sag of the shielding masts is assumed negligible. Solve for R_a for the masts. Equation (23) and Equation (24) can be solved for a given mast height with a desired R_a as shown below. Figure B.35 shows the triangular geometry to solve for X with two masts.

$$H_M = \sqrt[0.6]{\frac{R_{a-m}}{0.84\,I^{0.74}}}$$

Masts of height 12.2 meters (40 ft) are used for this example for twice-high bus height. The designer will need to evaluate the need for more masts or static shielding wires as H decreases. The designer will need to evaluate the side lightning protection and lower the mast height to provide the desired design. The Eriksson EGM for substation designs typically are for shielding structures above 20 meters. Solve for R_a for the 12.2 m (40 ft) masts.

$$R_{a-m} = 0.84 H^{0.6} I^{0.74}$$

Copyright © 2013 IEEE. All rights reserved.

Copyright The Institute of Electrical and Electronics Engineers, Inc.
Provided by IHS under license with IEEE
No reproduction or networking permitted without license from IHS

Order Number: 02120914
Sold to:EGAT [700166108393] - VARRIS.Y@EGAT.CO.TH,
Not for Resale,2016-09-15 03:57:48 UTC

$$R_{a-m} = 0.84(12.2\text{ m})^{0.6}(2.567)^{0.74} = 7.6\text{ m}$$

Utilize Equation (26) and solve the right angle triangle for X with R_{a-m} as given above as seen in Figure B.34 and Figure B.35. R_c was given by Table B.13 for the high bus. The maximum spacing between two masts is:

$$X_{2-m} = \sqrt{R_g^2 - \left(Y_g - \left(Y_C + R_C\right)\right)^2}$$

$$X_{2-m} = \sqrt{7.6^2 - \left(12.2 - \left(5.8 + 4.8\right)\right)^2}$$

$$X_{2-m} = 7.4\text{ m}$$

where

X_{2-m} is the maximum horizontal distance the shield can be placed from the conductor being protected
R_g is length of the radii of attraction arc for the shielding structure
R_c is length of the radii of attraction arc for the electrical component being protected
Y_g is vertical height of the shielding device
Y_c is the vertical height of the electrical component being protected

To provide side stroke lightning protection the following needs to be true for the shielding design.

$$R_g \geq Y_g - Y_c$$

To get four mast structures to intersect at one point and at a height of $R_C + Y_C$ to protect the equipment, the X horizontal distance is further reduced by the square root of 2. The isosceles triangle is seen in Figure B.35. The maximum spacing between four masts to intersect at one point for height $R_c + Y_c$ is:

$$X_{4-m} = \frac{X}{\sqrt{2}} = \frac{7.4}{\sqrt{2}} = 5.2\text{ m}$$

This can be simplified as seen in Figure B.35 for a domed design layout when Y_g is greater than $Y_c + R_c$. For this simplified method, the maximum spacing for four masts to intersect at one point is:

$$X_{4-m} = \frac{R_g}{\sqrt{2}} = \frac{7.6}{\sqrt{2}} = 5.4\text{ m}$$

Continue this process for both bays. Extend an additional four mast system to surround the transformer. Figure B.36 shows the final design layout with 12 mast structures covering the substation site. For the pole placement 10.7 m (35 ft) is used.

Copyright © 2013 IEEE. All rights reserved.

Copyright The Institute of Electrical and Electronics Engineers, Inc.
Provided by IHS under license with IEEE
No reproduction or networking permitted without license from IHS

Order Number: 02120914
Sold to:EGAT [700166108393] - VARRIS.Y@EGAT.CO.TH,
Not for Resale,2016-09-15 03:57:48 UTC

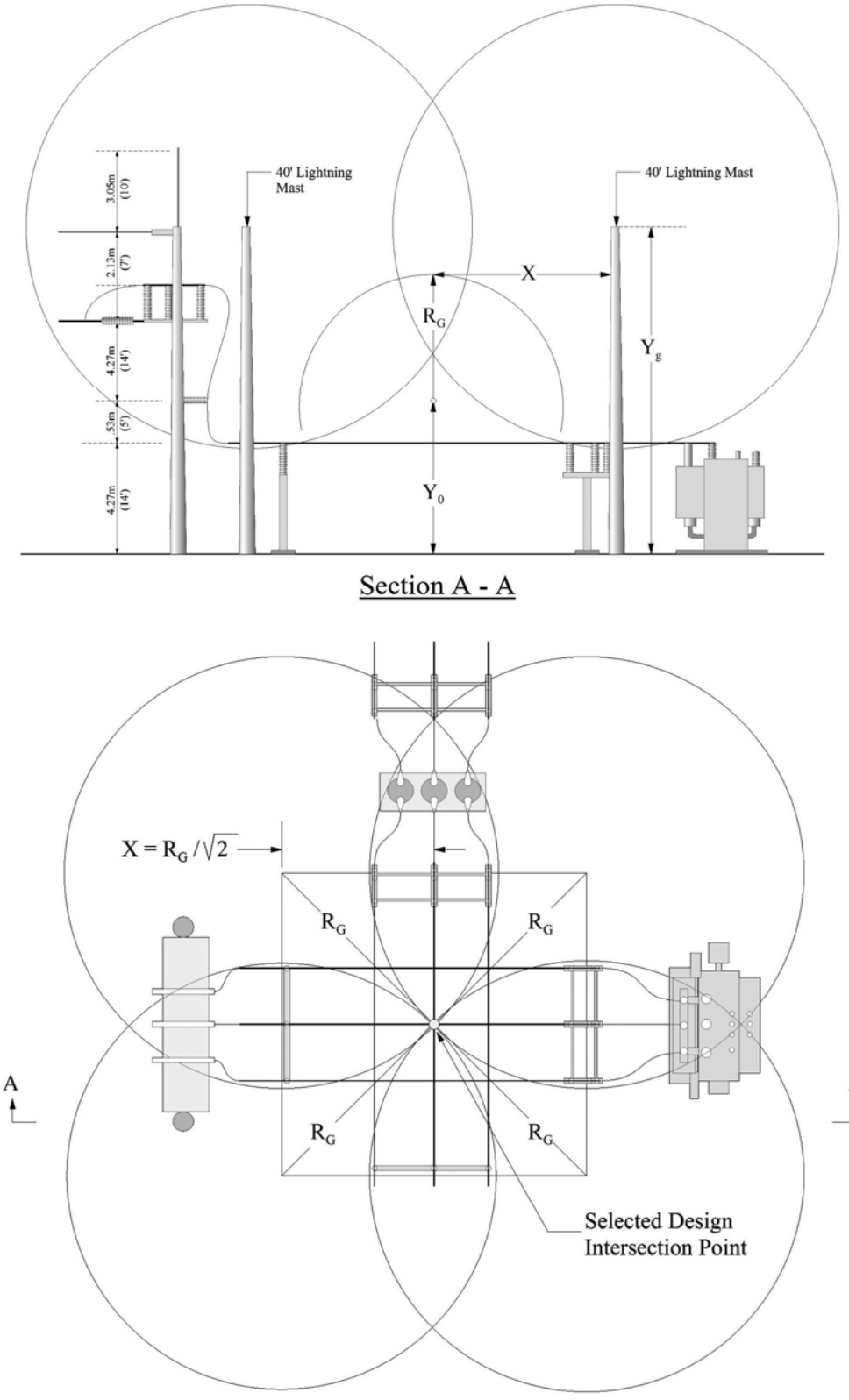

Figure B.35—69 kV distribution substation design elevation and plan layout for the Eriksson EGM example with four mast structures intersecting at one point

Copyright © 2013 IEEE. All rights reserved.

Copyright The Institute of Electrical and Electronics Engineers, Inc.
Provided by IHS under license with IEEE
No reproduction or networking permitted without license from IHS

Order Number: 02120914
Sold to:EGAT [700166108393] - VARRIS.Y@EGAT.CO.TH,
Not for Resale,2016-09-15 03:57:48 UTC

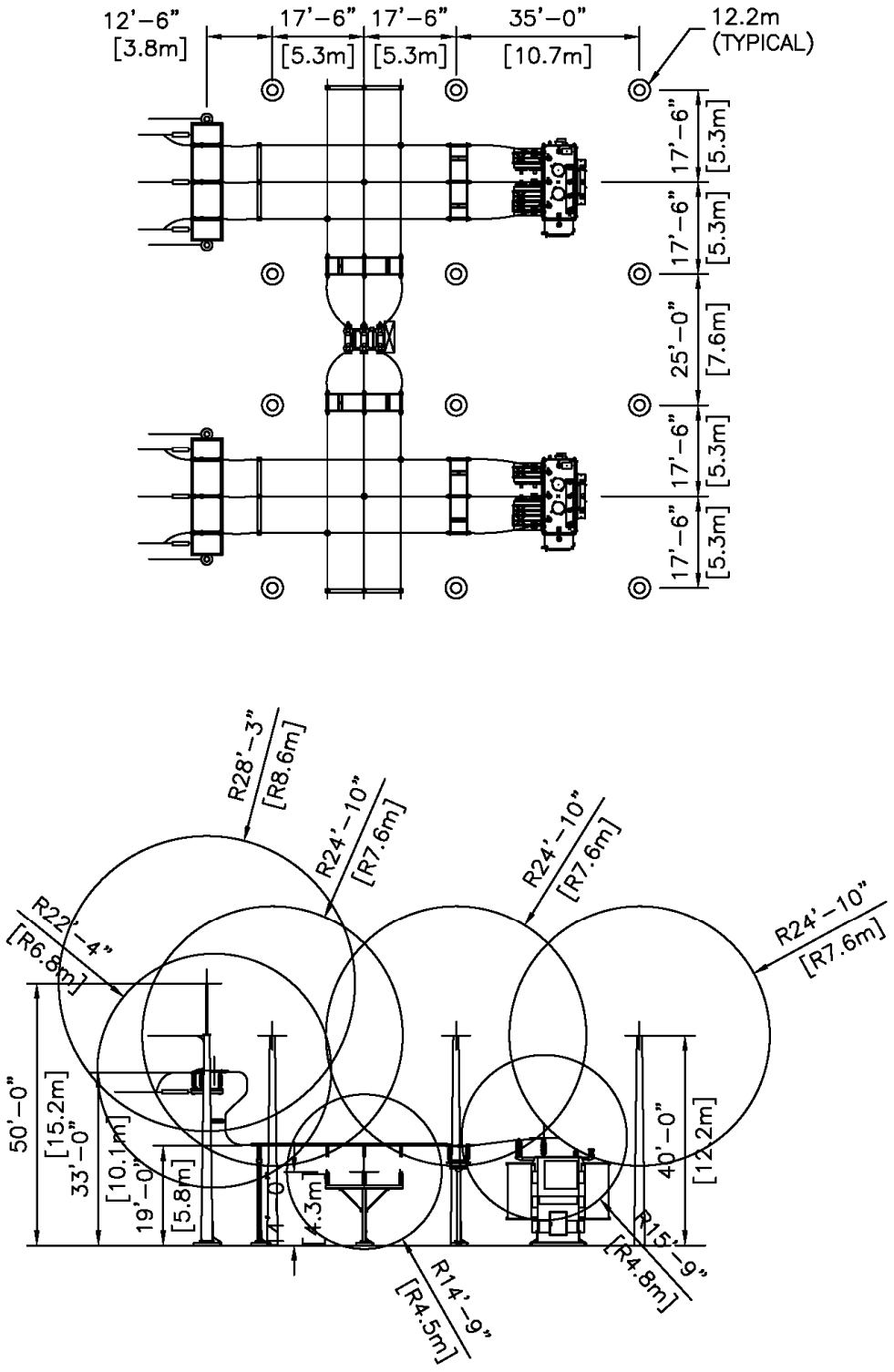

Figure B.36—69 kV distribution substation design final design layout for the Eriksson EGM example with 12.2 m (40 ft) mast placement for side stroke protection

Copyright © 2013 IEEE. All rights reserved.

Copyright The Institute of Electrical and Electronics Engineers, Inc.
Provided by IHS under license with IEEE
No reproduction or networking permitted without license from IHS

Order Number: 02120914
Sold to:EGAT [700166108393] - VARRIS.Y@EGAT.CO.TH,
Not for Resale,2016-09-15 03:57:48 UTC

B.5.5 69 kV distribution substation model utilizing the Eriksson EGM with mast structures with I_s greater than I_c

Generally, to minimize electrical equipment damage, the lightning strike current I_s is set equal to I_c which is the withstand voltage of the equipment being protected given by Equation (18). In certain instances this design criteria cannot be met. The following is an example of Figure B.26 with two masts placed between the property line and transformers to demonstrate this design process. This example will assume a standard distribution layout for a domed shielding design. Figure B.38 shows the layout and dimensions. The following is the R_a calculations for a mast in meters. I_s is set equal to twice I_c which is from Equation (18) in kA which is 2.567 kA for the 69 kV substation with the values below.

$$Z_s = 300\Omega \quad BIL = 350 \text{ kV}$$

$$I_s = \frac{BILx1.1}{(Z_s/2)} = \frac{2.2(BIL)}{Z_s}$$

$$I_s = \frac{2.2(350 \text{ kV})}{(300\ \Omega)} = 2.567 \text{ kA}$$

$$I_p = 2 \times I_s = 2 \times \frac{2.2(350 \text{ kV})}{300\ \Omega} = 2 \times 2.567 \text{ kA}$$

$$I_p = 2 \times I_s = 5.134 \text{ kA}$$

Utilize Equation (23) to solve for the R_a for all critical equipment structures within the substation to be protected. Continue this process for all the equipment in question. The perimeter fencing is assumed to be 10 ft high chain link as a reference. Table B.14 is the product of the tabulation for the design layout from Figure B.26.

$$R_{a,m} = 0.84\, H^{0.6}\, I^{0.74}$$

$$R_{a,m} = 0.84\,(10.1 \text{ m})^{0.6}\,(2.567)^{0.74} = 6.7 \text{ m}$$

Table B.14—69 kV distribution substation (Eriksson EGM) R_a for structures of equipment to be protected

Equipment	Y_c in meters	Y_c in feet	R_a in meters	R_a in feet
Switch	10.1	33.0	6.8	22.1
High bus and equipment	5.8	19.0	4.8	15.9
Low bus	4.3	14.0	4.0	13.2

Copyright © 2013 IEEE. All rights reserved.

Copyright The Institute of Electrical and Electronics Engineers, Inc.
Provided by IHS under license with IEEE
No reproduction or networking permitted without license from IHS

Order Number: 02120914
Sold to:EGAT [700166108393] - VARRIS.Y@EGAT.CO.TH,
Not for Resale,2016-09-15 03:57:48 UTC

B.5.5.1 69 kV distribution substation model utilizing the Eriksson EGM with two 18.3 m (60 ft) mast structure shielding design

Place the R_a for the equipment on the plan and elevation section views from Table B.14. Place the bus R_a for the center phase and end of bus structures. Mark all areas of conflict where shielding cannot be placed, such as future bays, transmission drops, roads, limited truck or crane access, within fire zones, complex buswork arrangements, etc. Calculate the R_a for the shielding mast structures from Equation (23). In this example we will be using an 18.3 m (60 ft) mast for shielding protection, see Table B.15 below. Calculate the R_a for the critical and design strike current values. Place the mast to maintain access and avoid conflicts with bus. Maintain minimum spacing for the voltage class for bus to grounded structures. Generally, place the masts between the property line and the equipment to be protected. See Figure B.37 for the pole placement and design layout. Adjust the masts until the R_a for all equipment is covered.

$$R_{a,m} = 0.84\, H^{0.6}\, I^{0.74}$$

$$R_{a,m} = 0.84\,(18.3\ \text{m})^{0.6}\,(2.567)^{0.74} = 9.7\ \text{m}$$

Table B.15—69 kV distribution substation (Eriksson EGM) R_a for shielding structures and masts to protect equipment for the design I_s

Equipment	Y_g in meters	Y_g in feet	R_a in meters	R_a in feet
Mast structures, Equation (23), I = 2.567 kA				
Tall exterior mast	18.3	60.0	9.7	31.7
Incoming tower	12.2	40.0	7.6	24.8
Tower with mast	15.2	50.0	8.6	28.4
Mast structures, Equation (23), I = 5.134 kA				
Tall exterior mast	18.3	60.0	16.1	52.9
Incoming tower	12.2	40.0	12.6	41.5
Tower with mast	15.2	50.0	14.4	47.4

Copyright © 2013 IEEE. All rights reserved.
Copyright The Institute of Electrical and Electronics Engineers, Inc.
Provided by IHS under license with IEEE
No reproduction or networking permitted without license from IHS
Order Number: 02120914
Sold to:EGAT [700166108393] - VARRIS.Y@EGAT.CO.TH,
Not for Resale,2016-09-15 03:57:48 UTC

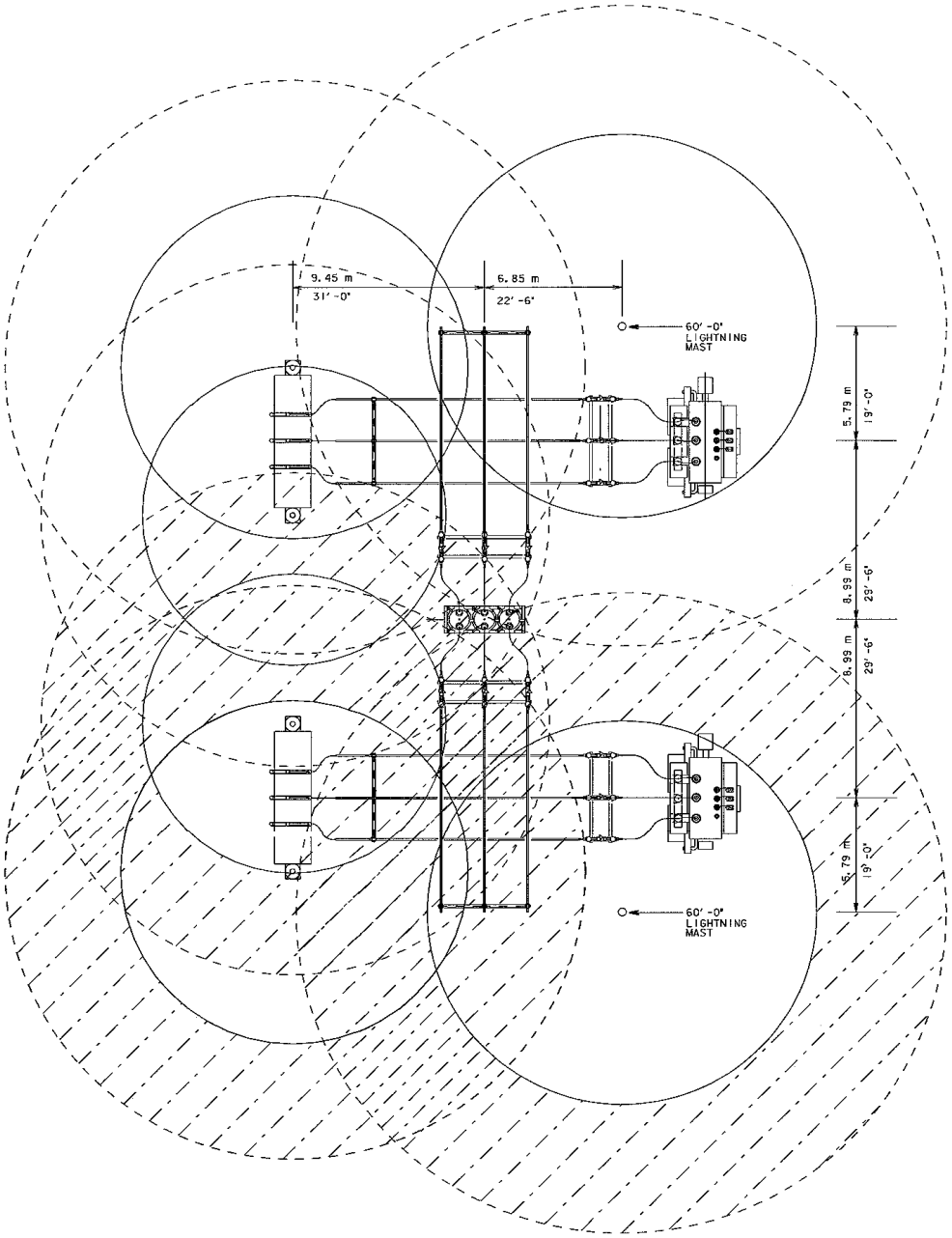

Figure B.37—69 kV distribution substation design plan layout for the Eriksson EGM example with two 18.3 m (60 ft) mast placement for I_s greater than I_c stroke current protection

B.5.5.2 69 kV distribution substation model utilizing the Eriksson EGM with two 18.3 m (60 ft) mast structure shielding design

Place the R_a for the equipment on the plan and elevation section views from Table B.9. Figure B.37 shows both radii of attraction, R_a, for both strike current values. The hatched area indicates the equipment that might be struck by lightning.

Copyright © 2013 IEEE. All rights reserved.

Copyright The Institute of Electrical and Electronics Engineers, Inc.
Provided by IHS under license with IEEE
No reproduction or networking permitted without license from IHS

Order Number: 02120914
Sold to:EGAT [700166108393] - VARRIS.Y@EGAT.CO.TH,
Not for Resale,2016-09-15 03:57:48 UTC

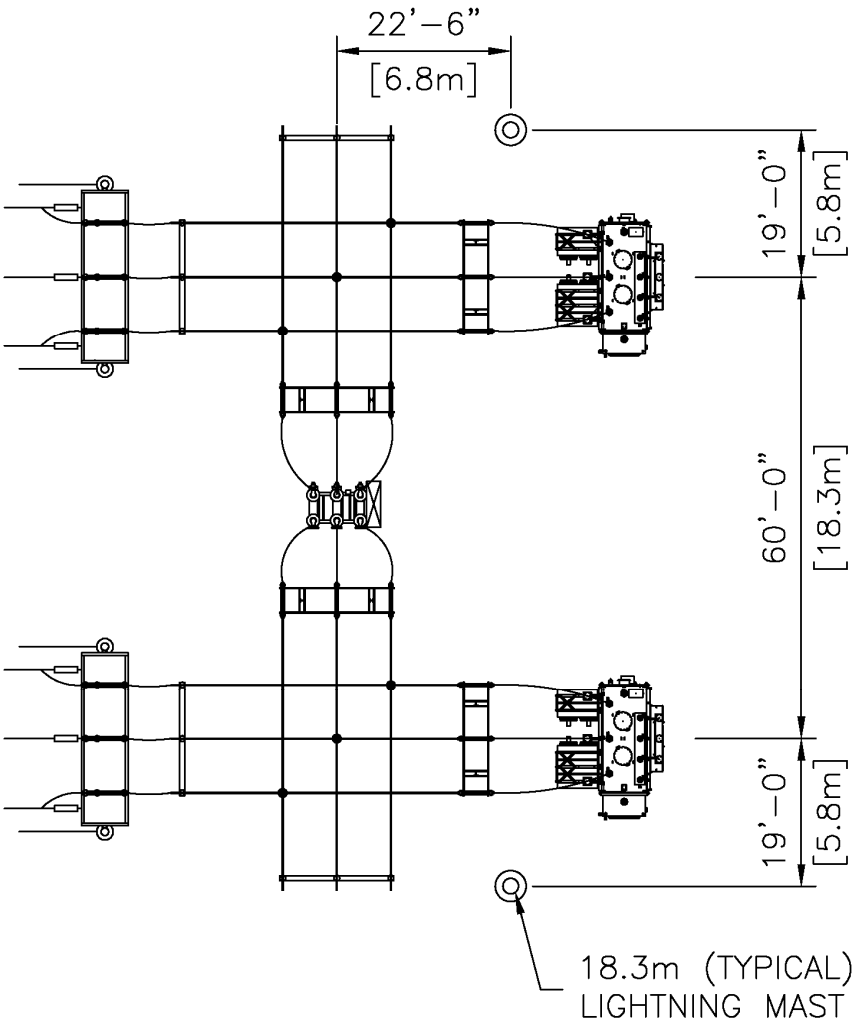

Figure B.38—69 kV distribution substation design final plan layout for the Eriksson EGM example with two 18.3 m (60 ft) mast placement for I_s greater than I_c stroke current protection

B.5.6 500/230 kV transmission substation model utilizing the Eriksson EGM with mast structures

The procedure for applying the Eriksson EGM method when there are multiple voltages in a substation is simple. The designer simply makes separate calculations for each voltage level utilizing the appropriate BIL and surge impedance.

Determine the substation design criteria. Is the substation a standard layout, or does it have critical parameters? Determine if side stroke protection is warranted. This example will assume a standard distribution layout for a domed shielding design. Figure B.39 shows the layout and dimensions for the 500/230 kV substation. Figure B.40 shows the typical elevations and dimensions for the 500 kV and 230 kV yards as well as the transformer and buswork. I_s is set equal to I_c which is from Equation (18) in kA for the substation yards with the values below as 11.786 kA for the 500 kV yard and 5.893 kA for the 230 kV yard. The 13.8 kV equipment is ignored for this example since the buswork is located below the 230 kV bus. This procedure would be repeated if the 13.8 kV bus was exposed.

Copyright © 2013 IEEE. All rights reserved.

Copyright The Institute of Electrical and Electronics Engineers, Inc.
Provided by IHS under license with IEEE
No reproduction or networking permitted without license from IHS

Order Number: 02120914
Sold to:EGAT [700166108393] - VARRIS.Y@EGAT.CO.TH,
Not for Resale,2016-09-15 03:57:48 UTC

500 kV yard

$$Z_s = 336\ \Omega \qquad BIL = 1800 \quad \text{kV}$$

$$I_s = \frac{BILx1.1}{(Z_s/2)} = \frac{2.2(BIL)}{Z_s}$$

$$I_s = \frac{2.2(1800\ \text{kV})}{336\ \Omega} = 11.786\ \text{kA}$$

230 kV yard

$$Z_s = 336\ \Omega \qquad BIL = 900\ \text{kV}$$

$$I_s = \frac{BILx1.1}{(Z_s/2)} = \frac{2.2(BIL)}{Z_s}$$

$$I_s = \frac{2.2(900\ kV)}{336\ \Omega} = 5.893\ \text{kA}$$

Utilize Equation (23) to solve for the R_a for all critical equipment structures within the substation to be protected. Continue this process for all the equipment in question for all voltage levels. The perimeter fencing is assumed to be 10 ft high chain link as a reference. Table B.16 is the product of the tabulation for the design layout from Figure B.39 and Figure B.40.

$$R_{a,m} = 0.84\,H^{0.6}\,I^{0.74}$$

$$R_{a,m} = 0.84\,(16.8\ \text{m})^{0.6}\,(11.786)^{0.74} = 28.3\ \text{m}$$

Table B.16—500/230 kV transmission substation (Eriksson EGM) R_a for structures of equipment to be protected

Equipment	Y_c in meters	Y_c in feet	R_a in meters	R_a in feet
500 kV yard and equipment				
Switch and breaker	7.9	26.0	18.0	59.2
High bus and equipment	16.8	55.0	28.3	92.8
Low bus	9.1	30.0	19.6	64.5
Transformer equipment	10.4	34.0	21.2	69.6
230 kV yard and equipment				
Switch and breaker	6.4	21.0	9.5	31.2
High bus	8.6	28.0	11.3	37.1
Low bus	6.1	20.0	9.2	30.3
Collector bus	11.9	39.0	13.8	45.2
Spare bus	9.4	30.9	12.0	39.3

Copyright © 2013 IEEE. All rights reserved.
Copyright The Institute of Electrical and Electronics Engineers, Inc.
Provided by IHS under license with IEEE
No reproduction or networking permitted without license from IHS
Order Number: 02120914
Sold to:EGAT [700166108393] - VARRIS.Y@EGAT.CO.TH,
Not for Resale,2016-09-15 03:57:48 UTC

B.5.6.1 500/230 kV transmission substation model utilizing the Eriksson EGM with 30.48 m (100 ft) mast structures for a shielding design

This example will utilize 30.48 m (100 ft) mast structures on both the 500 kV and 230 kV yards to be consistent with the other examples provided within this annex. Determine by company policy, standards, or customer criteria if static shield wiring can be placed over energized equipment or buswork. Determine the type of shielding to be used for the substation: masts, static wires, or both. Place the R_a for the equipment on the plan and elevation section views from Table B.17. Place the bus R_a for the center phase and end of bus structures. Mark all areas of conflict where shielding cannot be placed, such as future bays, transmission drops, roads, limited truck or crane access, within fire zones, complex buswork arrangements, etc. Calculate the R_a for the shielding mast structures from Equation (23). An arc or domed shielding design with staggered structure heights and placement might be used to provide additional shielding protection options for unusual terrain and circumstances. Place the mast to maintain access and avoid conflicts with buswork. Maintain minimum spacing for the voltage class for bus to grounded structures. Generally, place the masts between the property line and the equipment to be protected, and then add additional shielding masts between equipment to cover the site. See Figure B.39, Figure B.40, and Figure B.41 for the pole placement and design layout. Adjust the mast until the R_a for all equipment is covered. The following is the R_a calculations for a mast in meters, I_S is set equal to I_c which is from Equation (18) in kA.

$$R_{a,m} = 0.84\, H^{0.6}\, I^{0.74}$$

$$R_{a,m} = 0.84(30.5\ \text{m})^{0.6}(11.786)^{0.74} = 40.5\ \text{m}$$

Table B.17—500/230 kV transmission substation (Eriksson EGM) R_a for shielding structures and masts to protect equipment

Equipment	Y_g in meters	Y_g in feet	R_a in meters	R_a in feet
500 kV yard and equipment				
Incoming tower with mast	30.5	100.0	40.5	132.9
Mast structure	30.5	100.0	40.5	132.9
230 kV yard and equipment				
Incoming tower with mast	21.34	70	19.6	64.2
Mast structure	30.48	100	24.3	79.6

Similar to the 69 kV substation example in B.5.4.1, a four mast system can be placed to cover the center phase of the cross bus structures as shown in Figure B.42. Utilize Equation (26) and solve the right angle triangle for X with R_a as seen in Figure B.41. R_a is given by Table B.16 for the high bus. The maximum spacing between two masts is:

Copyright © 2013 IEEE. All rights reserved.

Copyright The Institute of Electrical and Electronics Engineers, Inc.
Provided by IHS under license with IEEE
No reproduction or networking permitted without license from IHS

Order Number: 02120914
Sold to:EGAT [700166108393] - VARRIS.Y@EGAT.CO.TH,
Not for Resale,2016-09-15 03:57:48 UTC

500 kV yard

$$X = \sqrt{R_g^2 - \left(\left(Y_C + R_C\right) - Y_g\right)^2}$$

$$X = \sqrt{40.5^2 - ((16.8 + 28.3) - 30.5)^2} = 37.8 \text{ m}$$

where

X is the maximum horizontal distance the shield can be placed from the conductor being protected
R_g is length of the radii of attraction arc for the shielding structure
R_C is length of the radii of attraction arc for the electrical component being protected
Y_g is vertical height of the shielding device
Y_C is the vertical height to the electrical component being protected

230 kV yard

$$X = \sqrt{R_g^2 - \left(\left(Y_C + R_C\right) - Y_g\right)^2}$$

$$X = \sqrt{24.3^2 - ((30.5 - (8.5 + 11.3))^2} = 21.8 \text{ m}$$

To get four mast structures to intersect at one point and at a height of $R_c + Y_c$ to protect the equipment, the X horizontal distance from above is reduced by the square root of 2 (1.414). The isosceles triangle is seen in Figure B.42. Since this transmission substation is more critical, no domed design will be considered for the 230 kV bus. The maximum spacing between four masts to intersectat a point and a height of $R_c + Y_c$ is:

$$X_{4-m} = R_g\sqrt{2}$$

500 kV yard

$$X_{4-m} = \frac{X}{\sqrt{2}} = \frac{37.8}{\sqrt{2}} = 26.7 \text{ m}$$

230 kV yard

$$X_{4-m} = \frac{X}{\sqrt{2}} = \frac{21.8}{\sqrt{2}} = 15.4 \text{ m}$$

Copyright © 2013 IEEE. All rights reserved.

Copyright The Institute of Electrical and Electronics Engineers, Inc.
Provided by IHS under license with IEEE
No reproduction or networking permitted without license from IHS

Order Number: 02120914
Sold to:EGAT [700166108393] - VARRIS.Y@EGAT.CO.TH,
Not for Resale,2016-09-15 03:57:48 UTC

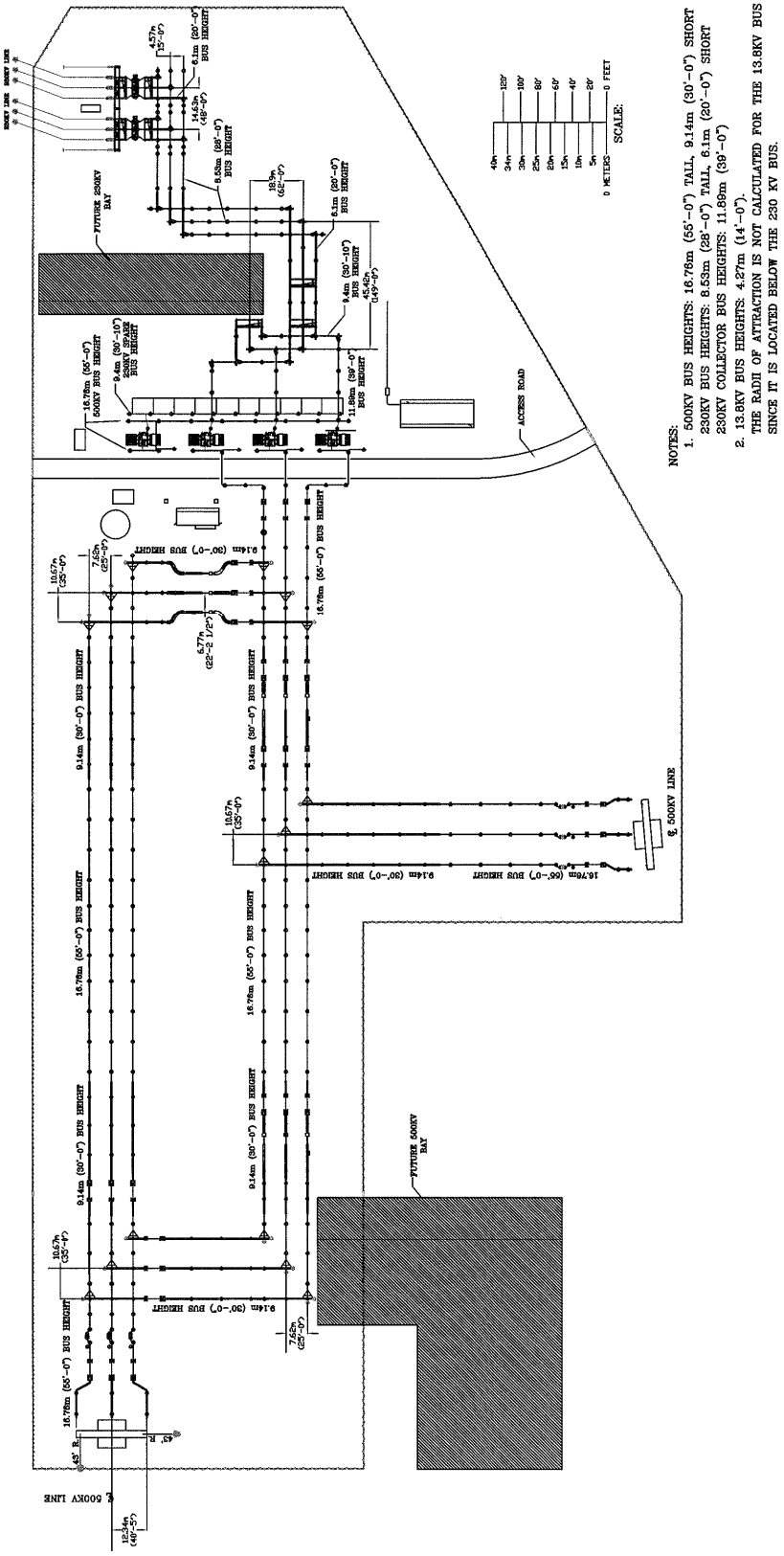

Figure B.39—500/230 kV transmission substation design plan layout with dimensions for the Eriksson EGM example

Copyright © 2013 IEEE. All rights reserved.

Copyright The Institute of Electrical and Electronics Engineers, Inc.
Provided by IHS under license with IEEE
No reproduction or networking permitted without license from IHS

Order Number: 02120914
Sold to:EGAT [700166108393] - VARRIS.Y@EGAT.CO.TH,
Not for Resale,2016-09-15 03:57:48 UTC

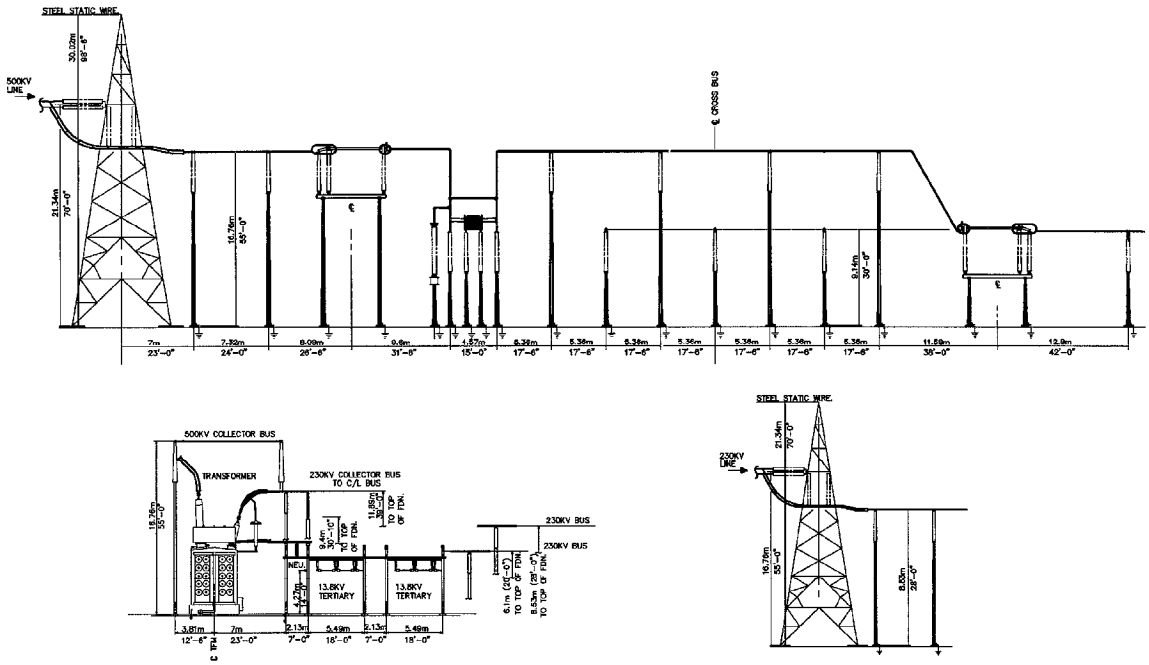

Figure B.40—500/230 kV transmission substation design elevation view layouts with dimensions for the Eriksson EGM example

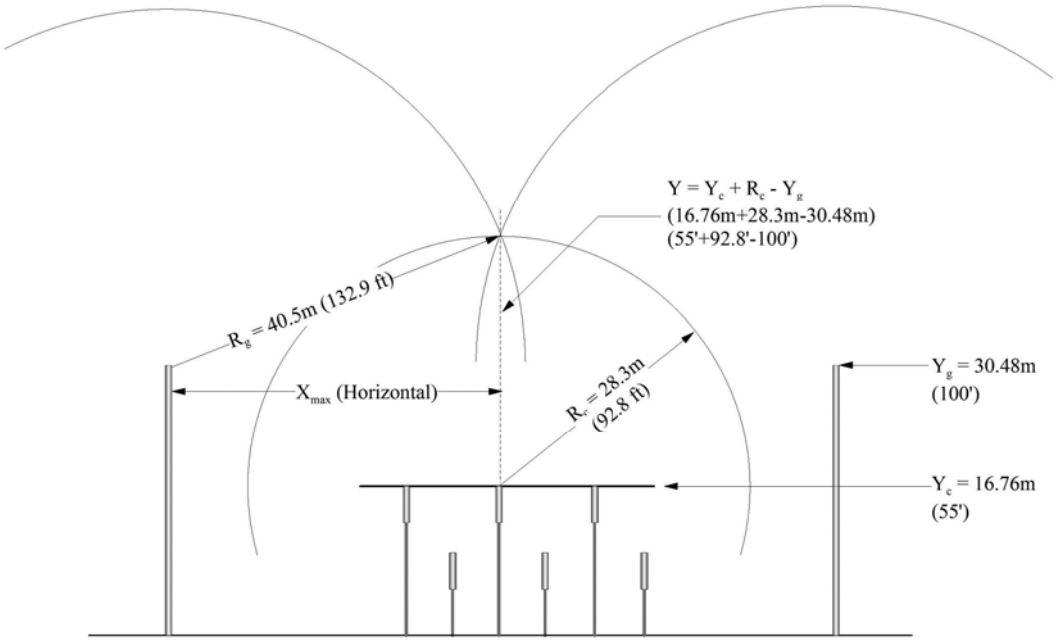

Figure B.41—500 kV transmission substation design bus elevation view layouts with dimensions for the Eriksson EGM mast structure example for the center bus triangle intersection calculations

Copyright © 2013 IEEE. All rights reserved.

Copyright The Institute of Electrical and Electronics Engineers, Inc.
Provided by IHS under license with IEEE
No reproduction or networking permitted without license from IHS

Order Number: 02120914
Sold to:EGAT [700166108393] - VARRIS.Y@EGAT.CO.TH,
Not for Resale,2016-09-15 03:57:48 UTC

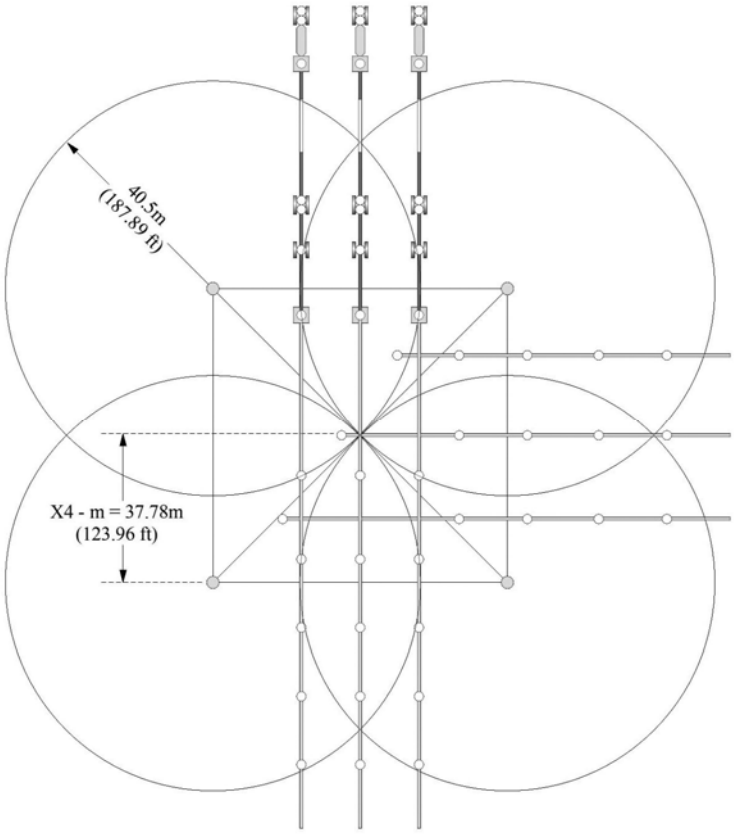

Figure B.42—500 kV transmission substation design bus plan view layouts with dimensions for the Eriksson EGM mast structure example for the center bus four mast intersection calculations

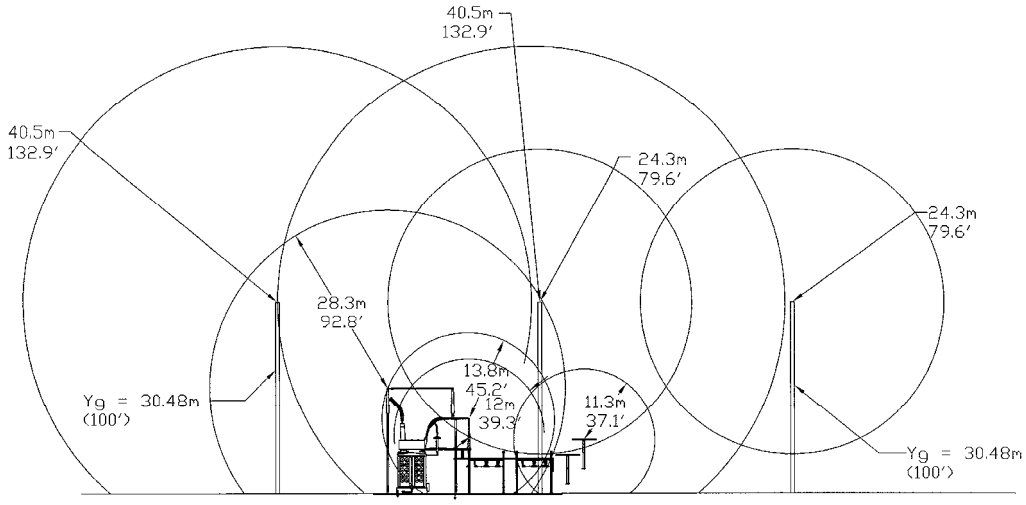

Figure B.43—500/230 kV transformer transmission substation design bus elevation view layouts with dimensions for the Eriksson EGM mast structure example for the mast intersection calculations. Notice the two R_a for the transformer secondary mast.

Copyright © 2013 IEEE. All rights reserved.

Copyright The Institute of Electrical and Electronics Engineers, Inc.
Provided by IHS under license with IEEE
No reproduction or networking permitted without license from IHS

Order Number: 02120914
Sold to:EGAT [700166108393] - VARRIS.Y@EGAT.CO.TH,
Not for Resale,2016-09-15 03:57:48 UTC

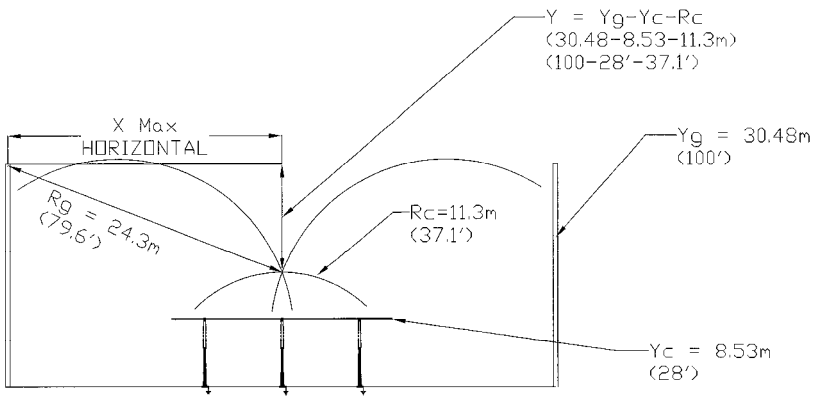

Figure B.44—230 kV transmission substation design bus elevation view layouts with dimensions for the Eriksson EGM mast structure example for the center bus triangle intersection calculations

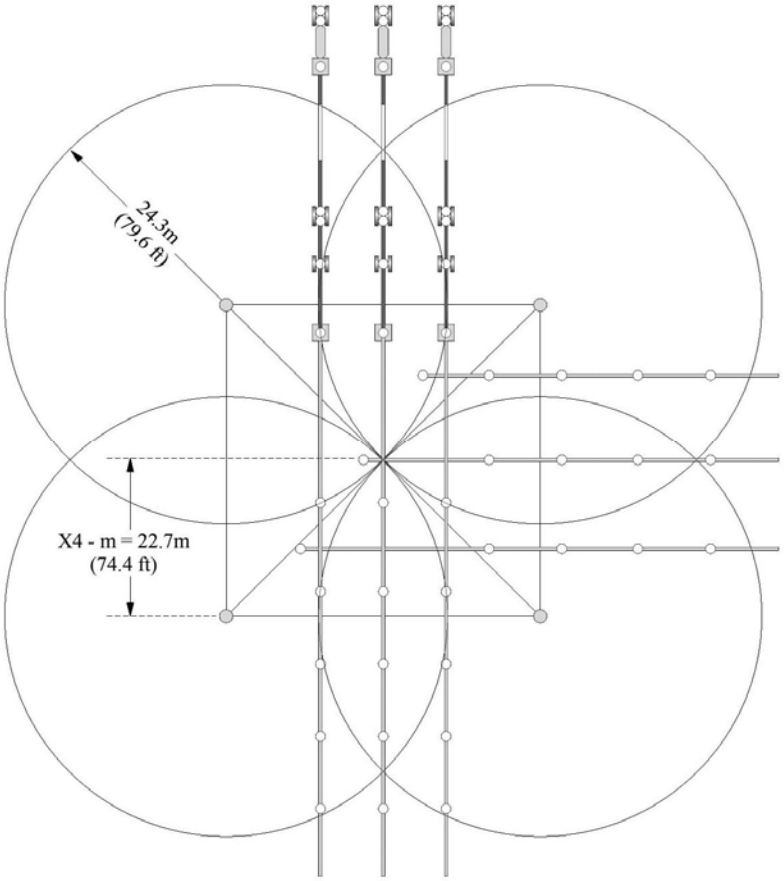

Figure B.45—230 kV transmission substation design bus plan view layouts with dimensions for the Eriksson EGM mast structure example for the center bus four mast intersection calculations

Copyright © 2013 IEEE. All rights reserved.

Copyright The Institute of Electrical and Electronics Engineers, Inc.
Provided by IHS under license with IEEE
No reproduction or networking permitted without license from IHS

Order Number: 02120914
Sold to:EGAT [700166108393] - VARRIS.Y@EGAT.CO.TH,
Not for Resale,2016-09-15 03:57:48 UTC

B.5.6.2 500/230 kV transmission substation model utilizing the Eriksson EGM with 30.48 m (100 ft) mast structure placement shielding design plan

The maximum separation of the mast poles shown for the above calculations places the poles outside of the fence structure. To allow for one row of mast structures between the two 500 kV bus structures, the poles will be shifted 1.86 m (6.1 ft). This example is for a standard canopy layout. The objective is to cover all equipment R_a radii of attraction by the mast structure protection. Start by placing the mast structures at critical bus intersections and proceeding outward. Figure B.43 shows the elevation for the secondary of the transformer. This area has two R_a to protect both the 500 kV and open 230 kV bus. Overlap the R_a on the mast structure and adjust the pole locations to cover and protect all electrical equipment. Figure B.46 shows the shielding protection layout and Figure B.47 shows the final pole placements.

Copyright © 2013 IEEE. All rights reserved.
Copyright The Institute of Electrical and Electronics Engineers, Inc.
Provided by IHS:under license with IEEE
No reproduction or networking permitted without license from IHS
Order Number: 02120914
Sold to:EGAT [700166108393] - VARRIS.Y@EGAT.CO.TH,
Not for Resale,2016-09-15 03:57:48 UTC

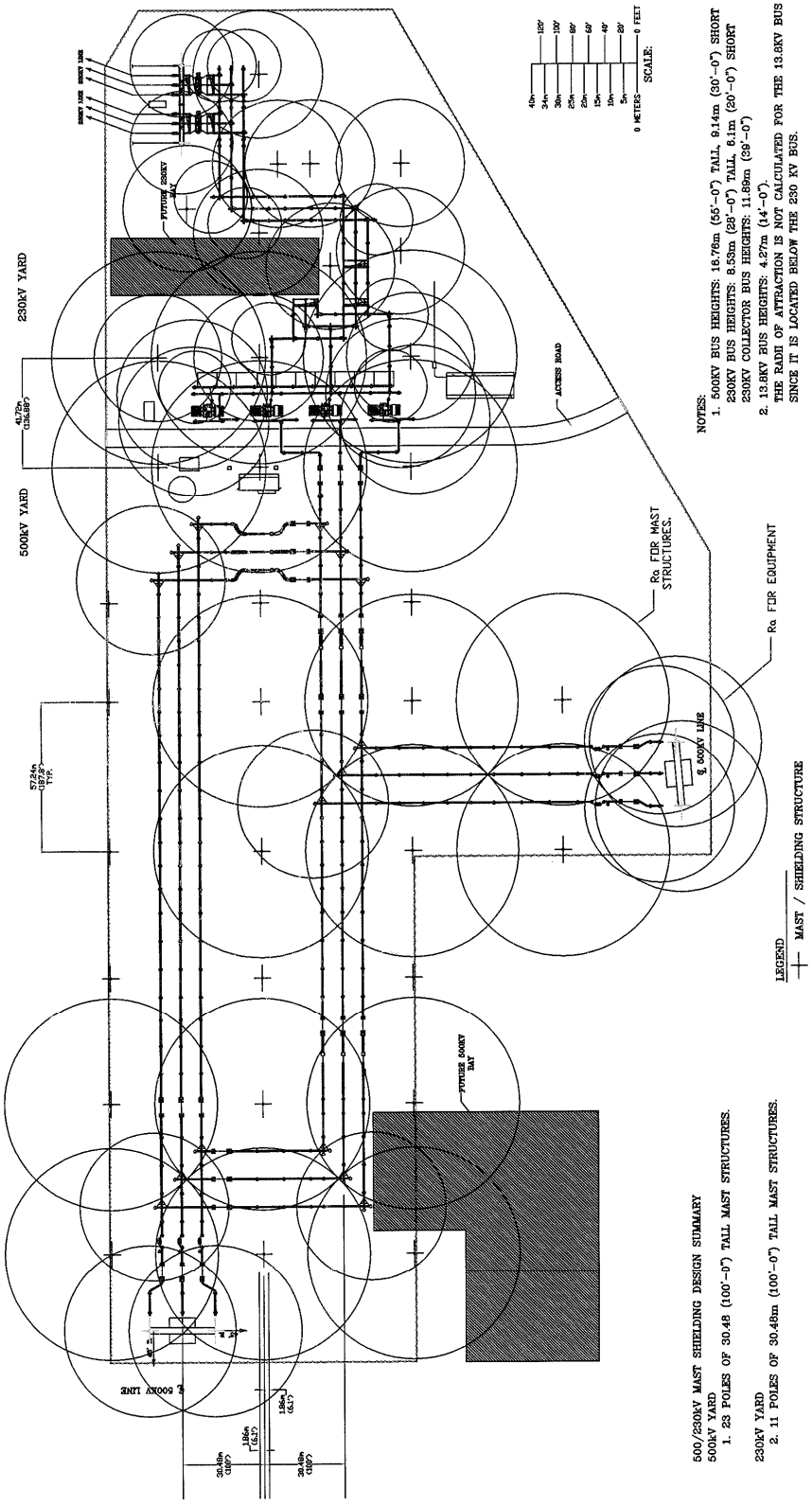

Figure B.46—500/230 kV transmission substation shielding design plan layouts with dimensions for the Eriksson EGM mast structure example

Copyright © 2013 IEEE. All rights reserved.

Copyright The Institute of Electrical and Electronics Engineers, Inc.
Provided by IHS under license with IEEE
No reproduction or networking permitted without license from IHS

Order Number: 02120914
Sold to:EGAT [700166108393] - VARRIS.Y@EGAT.CO.TH,
Not for Resale,2016-09-15 03:57:48 UTC

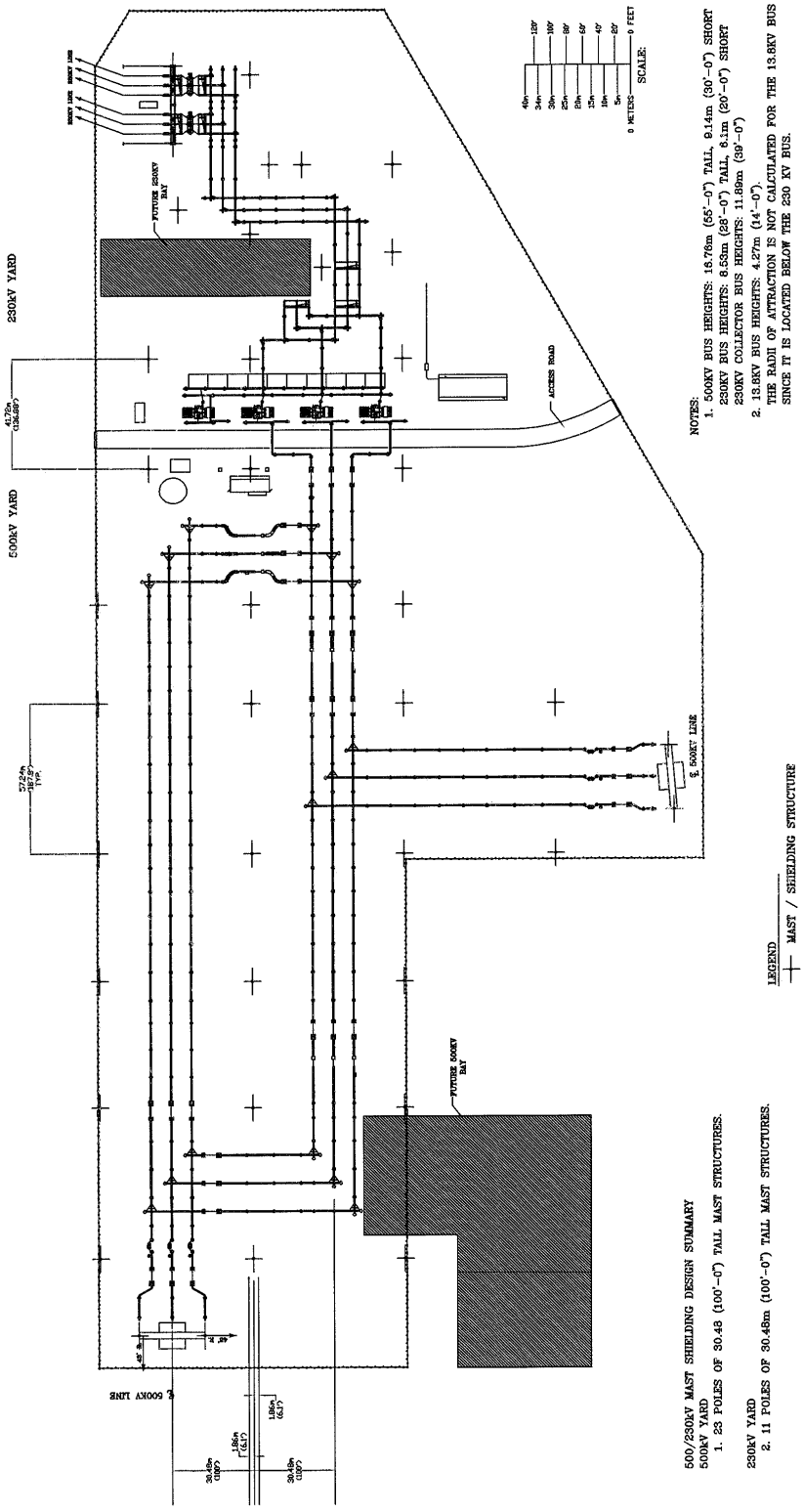

Figure B.47—500/230 kV transmission substation shielding design final plan view layout with dimensions for the Eriksson EGM mast structure example

Copyright © 2013 IEEE. All rights reserved.

Copyright The Institute of Electrical and Electronics Engineers, Inc.
Provided by IHS under license with IEEE
No reproduction or networking permitted without license from IHS

Order Number: 02120914
Sold to:EGAT [700166108393] - VARRIS.Y@EGAT.CO.TH,
Not for Resale,2016-09-15 03:57:48 UTC

B.5.7 500/230 kV transmission substation model utilizing the Eriksson EGM with static wire structures

To apply the Eriksson EGM method when there are multiple voltages in a substation, the designer must make separate calculations for each voltage level utilizing the appropriate BIL and surge impedance.

Determine the substation design criteria. Is the substation a standard layout, or does it have critical parameters? Determine if side stroke protection is warranted. This example will assume a standard distribution layout for a domed shielding design. Figure B.39 and Figure B.40 shows the typical elevations and dimensions for the 500 kV and 230 kV yards as well as the transformer and bus. I_s is set equal to I_c which is from Equation (19) in kA for the substation yards with the values below as 11.786 kA for the 500 kV yard and 5.893 kA for the 230 kV yard. The 13.8 kV equipment is ignored for this example since the buswork is located below the 230 kV bus. This procedure would be repeated if the 13.8 kV bus was exposed.

500 kV yard

$$Z_s = 336\ \Omega$$

$$BIL = 1800\ \text{kV}$$

$$I_s = \frac{BILx1.1}{(Z_s/2)} = \frac{2.2(BIL)}{Z_s}$$

$$I_s = \frac{2.2(1800\ \text{kV})}{336\ \Omega} = 11.786\ \text{kA}$$

230 kV yard

$$Z_s = 336\ \Omega$$

$$BIL = 900\ \text{kV}$$

$$I_s = \frac{BILx1.1}{(Z_s/2)} = \frac{2.2(BIL)}{Z_s}$$

$$I_s = \frac{2.2(900\ \text{kV})}{336\ \Omega} = 5.893\ \text{kA}$$

Utilize Equation (23) in meters to solve for the R_a for all critical equipment structures within the substation to be protected. Continue this process for all the equipment in question for all voltage levels. The perimeter fencing is assumed to be 10 ft high chain link as a reference.

Table B.18 is the product of the tabulation for the design layout from Figure B.39 and Figure B.40.

Copyright © 2013 IEEE. All rights reserved.

Copyright The Institute of Electrical and Electronics Engineers, Inc.
Provided by IHS under license with IEEE
No reproduction or networking permitted without license from IHS

Order Number: 02120914
Sold to:EGAT [700166108393] - VARRIS.Y@EGAT.CO.TH,
Not for Resale,2016-09-15 03:57:48 UTC

$$R_{a,m} = 0.84\, H^{0.6}\, I^{0.74}$$

$$R_{a,m} = 0.84(16.8\text{ m})^{0.6}(11.786)^{0.74} = 28.3\text{ m}$$

Table B.18—500/230 kV transmission substation (Eriksson EGM) R_a for structures of equipment to be protected

Equipment	Y_c in meters	Y_c in feet	R_a in meters	R_a in feet
500 KV yard and equipment				
Switch and breaker	7.9	26.0	18.0	59.2
High bus	16.8	55.0	28.3	92.8
Low bus	9.1	30.0	19.6	64.5
Transformer equipment	10.4	34.0	21.2	69.6
230 KV yard and equipment				
Switch and breaker	6.4	21.0	9.5	31.2
High bus	8.5	28.0	11.3	37.1
Low bus	6.1	20.0	9.2	30.3
Collector bus	11.9	39.0	13.8	45.2
Spare bus	9.4	30.9	12.0	39.3

B.5.7.1 500/230 kV transmission substation model utilizing the Eriksson EGM with 30.48 m (100 ft) static wire structures for a shielding design

This example will utilize 30.48 m (100 ft) static wire structures on both the 500 kV and 230 kV yards to be consistent with the other examples provided within this annex. Determine by company policy, standards, or customer criteria if static shield wiring can be placed over energized equipment or bus. Determine the type of shielding to be used for the substation: masts, static wires, or both. Place the R_a for the equipment on the plan and elevation section views from Table B.18. Place the bus R_a for the center phase and end of bus structures. Mark all areas of conflict where shielding cannot be placed, such as future bays, transmission drops, roads, limited truck or crane access, within fire zones, complex bus arrangements, etc. Calculate the R_a for the shielding static wire structures from Equation (23) in meters. An arc or domed shielding design with staggered structure heights and placement might be used to provide additional shielding protection options for unusual terrain and circumstances. Place the mast to maintain access and avoid conflicts with bus. Maintain minimum spacing for the voltage class for bus to grounded structures. Generally, place the static wires between the property line and the equipment to be protected first, then add additional shielding wires between equipment to cover the site. See Figure B.48, Figure B.49, and Figure B.50 for the pole placement and design layout. Adjust the static wires until the R_a for all equipment is covered. The following is the R_a calculations for a mast in meters. I_s is set equal to I_c which is from Equation (18) in kA.

Copyright © 2013 IEEE. All rights reserved.

Copyright The Institute of Electrical and Electronics Engineers, Inc.
Provided by IHS under license with IEEE
No reproduction or networking permitted without license from IHS

Order Number: 02120914
Sold to:EGAT [700166108393] - VARRIS.Y@EGAT.CO.TH,
Not for Resale,2016-09-15 03:57:48 UTC

$$R_{a,m} = 0.67\, H^{0.6}\, I^{0.74}$$

$$R_{a,m} = 0.67(30.5\text{ m})^{0.6}(11.786)^{0.74} = 32.3\text{ m}$$

Table B.19—500/230 kV transmission substation (Eriksson EGM) R_a and R_g for shielding static wires and structures to protect equipment

Equipment	Y_g in meters	Y_g in feet	R_a in meters	R_a in feet
500 kV yard and equipment				
Incoming tower with mast	30.5	100.0	32.3	106.0
Static wire structure	30.5	100.0	32.3	106.0
230 kV yard and equipment				
Incoming tower with mast	21.3	70.0	15.6	51.2
Static wire structure	30.5	100.0	19.3	63.5

Similar to the 69 kV substation example B.5.4.1, a static wire system can be placed on each side of equipment to cover the center phase of the cross bus structures as shown in Figure B.40. Utilize Equation (26) and solve the right angle triangle for X with R_a as given by Table B.18 for the high bus. The maximum spacing between two static wires is:

500 kV yard

$$X = \sqrt{R_g^2 - \left(\left(Y_C + R_C\right) - Y_g\right)^2}$$

$$X = \sqrt{32.3^2 - ((16.8 + 28.3) - 30.5))^2} = 28.8\text{ m}$$

where

X is the maximum horizontal distance the shield can be placed from the conductor being protected
R_g is length of the radii of attraction arc for the shielding structure
R_c is length of the radii of attraction arc for the electrical component being protected
Y_g is vertical height of the shielding device
Y_C is the vertical height to the electrical component being protected

230 kV yard

$$X = \sqrt{R_g^2 - \left(\left(Y_C + R_C\right) - Y_g\right)^2}$$

$$X = \sqrt{19.3 - ((30.5 - (8.5 + 11.3))^2} = 16.1\text{ m}$$

The radii of attraction R_a is greater than the mast height, in theory all lightning strikes will likely hit the ground or the shielding structure. Additional side lightning protection is not required but might be desired

Copyright © 2013 IEEE. All rights reserved.
Copyright The Institute of Electrical and Electronics Engineers, Inc.
Provided by IHS under license with IEEE
No reproduction or networking permitted without license from IHS
Order Number: 02120914
Sold to:EGAT [700166108393] - VARRIS.Y@EGAT.CO.TH,
Not for Resale,2016-09-15 03:57:48 UTC

by the design criteria. To provide side stroke lightning protection the following needs to be true for the shielding design. For transmission substations, the maximum horizontal distance *X* needs to be reduced for sag and wind swing of the static wires for installation spans longer than 60 m (200 ft).

$$R_g \geq Y_g - Y_c$$

$$R_a \sqrt{2} \leq X - X_{sag\,/\,swing}$$

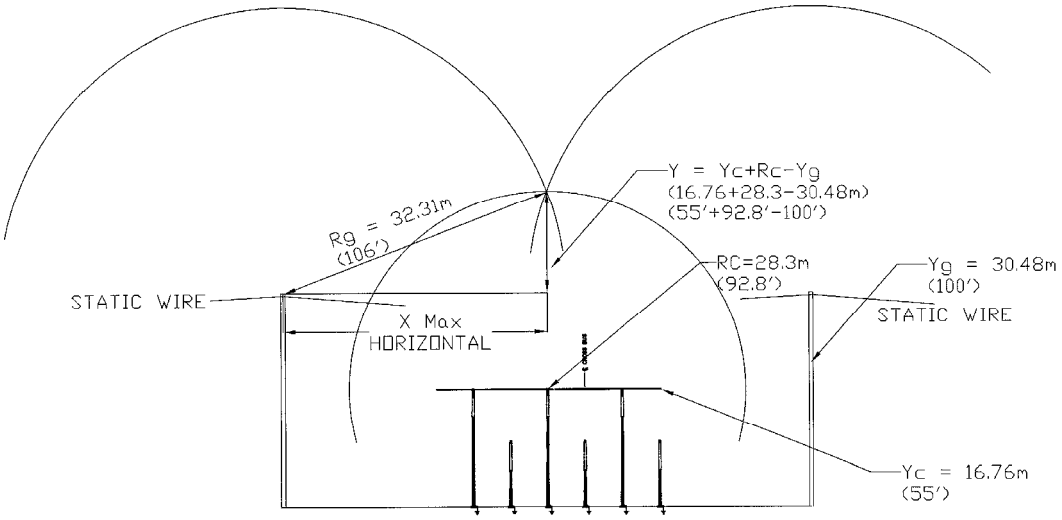

Figure B.48—500 kV transmission substation design bus elevation view layouts with dimensions for the Eriksson EGM static wire example for the center bus triangle intersection calculations

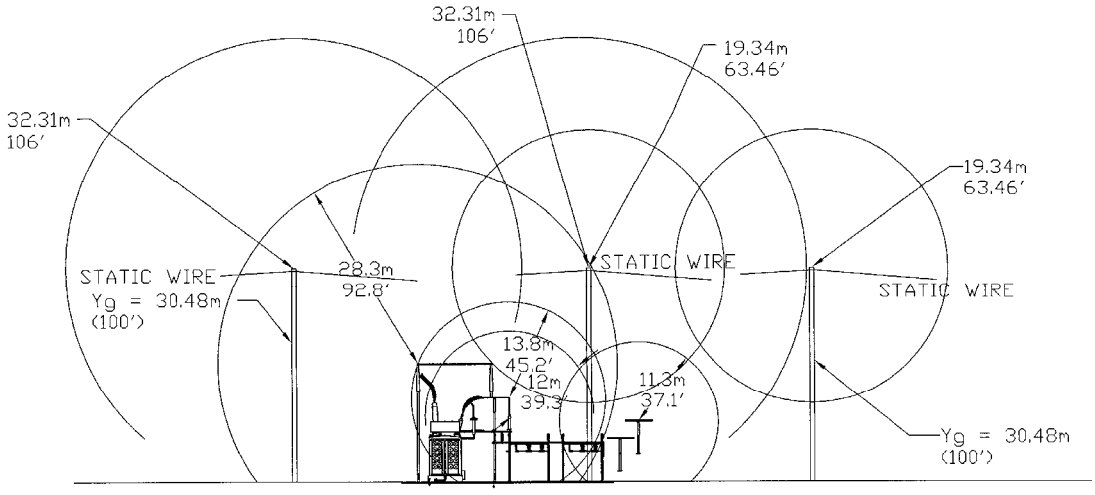

Figure B.49—500/230 kV transformer transmission substation design bus elevation view layouts with dimensions for the Eriksson EGM static wire example for the structure intersection calculations. Notice the two R_a for the transformer secondary structures.

Copyright © 2013 IEEE. All rights reserved.

Copyright The Institute of Electrical and Electronics Engineers, Inc.
Provided by IHS under license with IEEE
No reproduction or networking permitted without license from IHS

Order Number: 02120914
Sold to:EGAT [700166108393] - VARRIS.Y@EGAT.CO.TH,
Not for Resale,2016-09-15 03:57:48 UTC

B.5.7.2 500/230 kV transmission substation model utilizing the Eriksson EGM with static wires mounted at 30.48 m (100 ft) structure placement shielding design plan

The maximum separation of the mast poles shown for the above calculations places the poles near the fence structure. The outer static wires have been moved inward to 9.14 m (30 ft) and 12.2 m (40 ft) of the bus within the 500 kV yard. To allow for one row of static wires and structures between the two 500 kV bus structures, the poles will be shifted to have 50.3 m (165 ft) horizontal separation between the static wires. This example is for a standard canopy layout. The objective is to cover all equipment R_a radii of attraction by the mast structure protection. Figure B.50 shows the elevation for the secondary of the transformer. This area has two R_a to protect both the 500 kV and open 230 kV bus. Overlap the R_a on the mast structure and adjust the pole locations to cover and protect all electrical equipment. Figure B.51 shows the shielding protection layout and Figure B.52 shows the final pole and static wire placements.

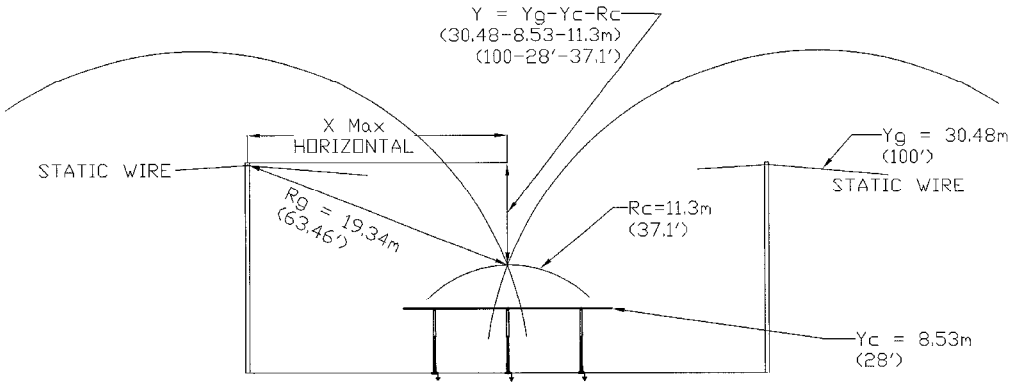

Figure B.50—230 kV transmission substation design bus elevation view layouts with dimensions for the Eriksson EGM static wire example for the center bus triangle intersection calculations

Copyright © 2013 IEEE. All rights reserved.

Copyright The Institute of Electrical and Electronics Engineers, Inc.
Provided by IHS under license with IEEE
No reproduction or networking permitted without license from IHS

Order Number: 02120914
Sold to:EGAT [700166108393] - VARRIS.Y@EGAT.CO.TH,
Not for Resale,2016-09-15 03:57:48 UTC

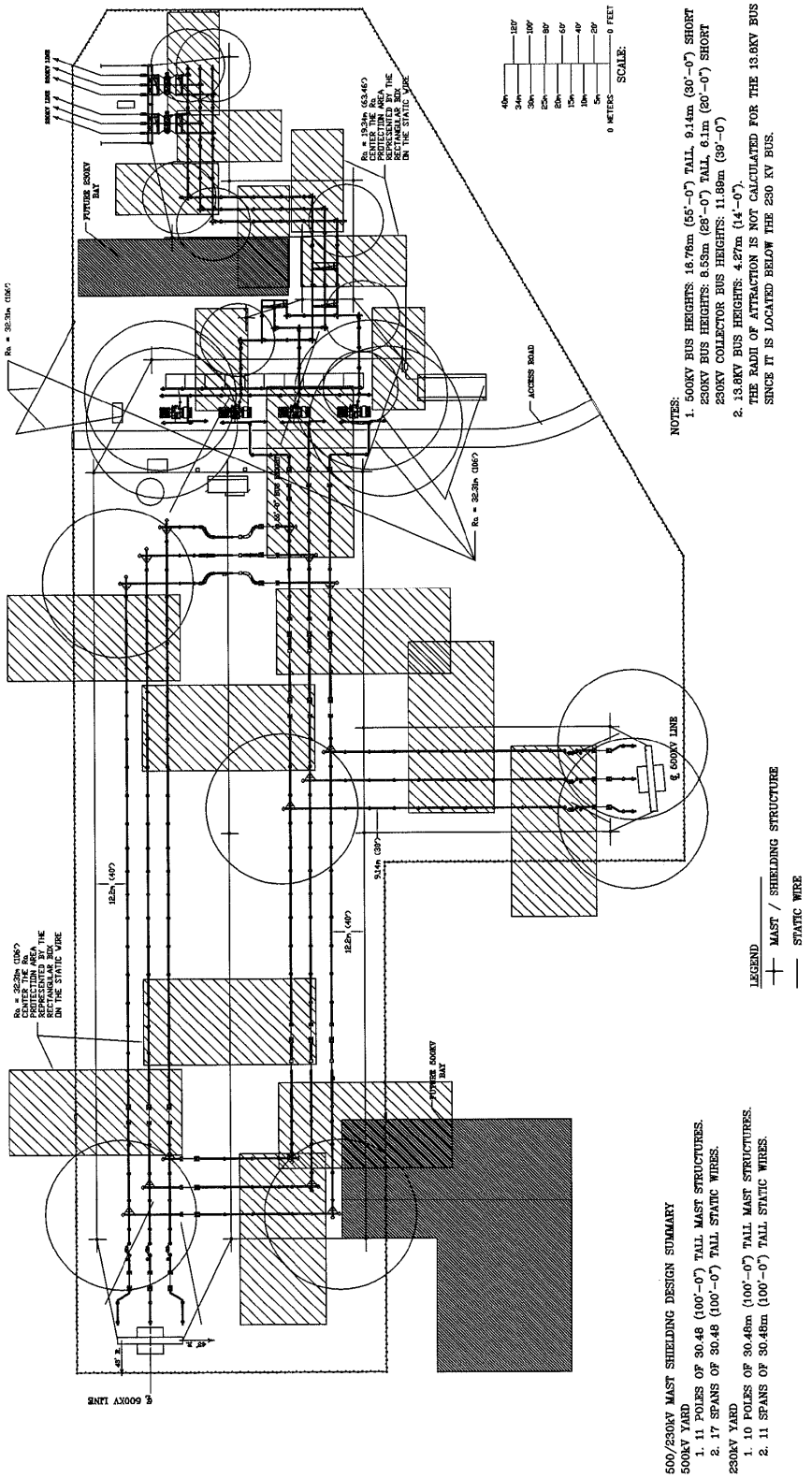

Figure B.51—500/230 kV transmission substation shielding design plan layout with dimensions for the Eriksson EGM static wire example

Copyright © 2013 IEEE. All rights reserved.

Copyright The Institute of Electrical and Electronics Engineers, Inc.
Provided by IHS under license with IEEE
No reproduction or networking permitted without license from IHS

Order Number: 02120914
Sold to:EGAT [700166108393] - VARRIS.Y@EGAT.CO.TH,
Not for Resale,2016-09-15 03:57:48 UTC

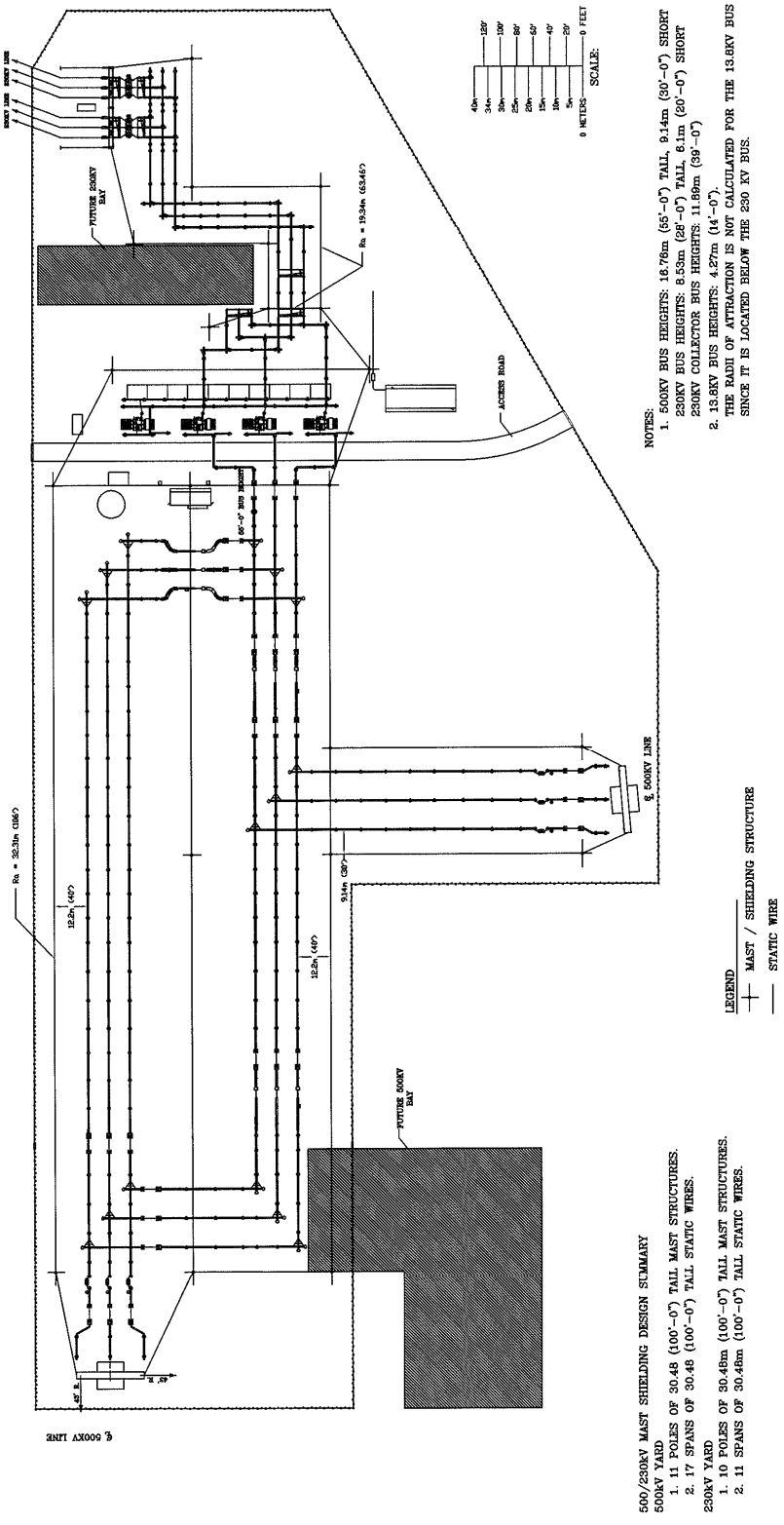

Figure B.52—500/230 kV transmission substation shielding design final plan view layout with dimensions for the Eriksson EGM static wire example

Copyright © 2013 IEEE. All rights reserved.

Copyright The Institute of Electrical and Electronics Engineers, Inc.
Provided by IHS under license with IEEE
No reproduction or networking permitted without license from IHS

Order Number: 02120914
Sold to:EGAT [700166108393] - VARRIS.Y@EGAT.CO.TH,
Not for Resale,2016-09-15 03:57:48 UTC

B.5.8 500/230 kV transmission substation model utilizing the Eriksson EGM with the combination of masts and static wire structures

In this example we will combine the protection properties of the masts and static wires similar to the two previous examples. The objective of the design is to eliminate static wire bus and transformer crossing and provide additional side lightning stroke protection. The procedure for applying the Eriksson EGM method when there are multiple voltages in a substation is simple. The designer simply makes separate calculations for each voltage level utilizing the appropriate BIL and surge impedance. Determine the substation design criteria. Is the substation a standard layout, or does it have critical parameters? Determine if side stroke protection is warranted. This example will assume a standard distribution layout for a domed shielding design. Figure B.39 shows the layout and dimensions for the 500/230 kV substation. Figure B.40 shows the typical elevations and dimensions for the 500 kV and 230 kV yards as well as the transformer and buswork. I_s is set equal to I_c which is from Equation (18) in kA for the substation yards with the values below as 11.786 kA for the 500 kV yard and 5.893 kA for the 230 kV yard. The 13.8 kV equipment is ignored for this example since the bus is located below the 230 kV bus. This procedure would be repeated if the 13.8 kV bus was exposed.

500 kV yard

$$Z_s = 336\ \Omega$$

$$BIL = 1800\ \text{kV}$$

$$I_s = \frac{BILx1.1}{(Z_s/2)} = \frac{2.2(BIL)}{Z_s}$$

$$I_s = \frac{2.2(1800\ \text{kV})}{336\ \Omega} = 11.786\ \text{kA}$$

230 kV yard

$$Z_s = 336\ \Omega$$

$$BIL = 900\ \text{kV}$$

$$I_s = \frac{BILx1.1}{(Z_s/2)} = \frac{2.2(BIL)}{Z_s}$$

$$I_s = \frac{2.2(900\ \text{kV})}{336\ \Omega} = 5.893\ \text{kA}$$

Utilize Equation (23) to solve for the R_a for all critical equipment structures within the substation to be protected. Continue this process for all the equipment in question for all voltage levels. The perimeter fencing is assumed to be 10 ft high chain link as a reference. Table B.20 is the product of the tabulation for the design layout from Figure B.39 and Figure B.40.

Copyright © 2013 IEEE. All rights reserved.

Copyright The Institute of Electrical and Electronics Engineers, Inc.
Provided by IHS under license with IEEE
No reproduction or networking permitted without license from IHS

Order Number: 02120914
Sold to:EGAT [700166108393] - VARRIS.Y@EGAT.CO.TH,
Not for Resale,2016-09-15 03:57:48 UTC

$$R_{a,m} = 0.84\, H^{0.6}\, I^{0.74}$$

$$R_{a,m} = 0.84(16.8\text{ m})^{0.6}(11.8)^{0.74} = 28.3\text{ m}$$

Table B.20—500/230 kV transmission substation (Eriksson EGM) R_a and R_g for structures of equipment to be protected

Equipment	Y_c in meters	Y_c in feet	R_a in meters	R_a in feet
500 kV yard and equipment				
Switch and breaker	7.9	26.0	18.0	59.2
High bus	16.8	55.0	28.3	92.8
Low bus	9.1	30.0	19.6	64.5
Transformer equipment	10.4	34.0	21.2	69.6
230 kV yard and equipment				
Switch and breaker	6.4	21.0	9.5	31.2
High bus	8.5	28.0	11.3	37.1
Low bus	6.1	20.0	9.2	30.3
Collector bus	11.9	39.0	13.8	45.2
Spare bus	9.4	30.9	12.0	39.3

B.5.8.1 500/230 kV transmission substation model utilizing the Eriksson EGM with the combination of masts and static wire structures for a shielding design

This example will utilize 30.48 m (100 ft) static wire structures on both the 500 kV and 230 kV yards to be consistent with the other examples provided within this annex. Begin the combination design by placing masts around the complex transformer structure. As seen in the 69 kV example in Figure B.53, an isosceles triangle can be utilized to locate four masts around crossing bus structures. This can be expanded to six masts.

To design a shielding system around a rectangular complex structure with six masts, make two equal boxes. Measure the height and width surrounding the complex structures. The width of the box is 2L and the height is 4L as seen in the example in Figure B.53. Place a diagonal across the box and measure the hypotenuse. The square root of 2 times the hypotenuse is the radii of attraction R_M (2.828 × L) Using Equation B.8.1 solve for H_M, then round up to the next standard shielding mast height. This will provide additional protection with designed-in overlap. Place a shielding structure at each box corner. Static shield wires can be added for side lightning strokes as needed for the design. Measure the critical structure areas such as around the transformers to select the best shielding height (H) of structures that will provide the most beneficial R_a for the site:

500 kV yard

$$H_M = \sqrt[0.6]{\frac{R_M}{0.84\, I^{0.74}}}$$

Copyright © 2013 IEEE. All rights reserved.

Copyright The Institute of Electrical and Electronics Engineers, Inc.
Provided by IHS under license with IEEE
No reproduction or networking permitted without license from IHS

Order Number: 02120914
Sold to:EGAT [700166108393] - VARRIS.Y@EGAT.CO.TH,
Not for Resale,2016-09-15 03:57:48 UTC

$$H_M = \sqrt[0.6]{\frac{36\text{ m}}{0.84(11.786)^{0.74}}} = 25\text{m}$$

230 kV yard

$$H_M = \sqrt[0.6]{\frac{R_M}{0.84\,I^{0.74}}}$$

$$H_M = \sqrt[0.6]{\frac{36\text{ m}}{0.84(5.893)^{0.74}}} = 58.9\text{m}$$

We will use the 30.48 m (100 ft) masts to be consistent with the other examples. Place the R_a for all shielding structures on the plan and elevation views within the design area and confirm all critical equipment is shielded as required by the design. On the secondary side of transmission transformer, place the R_a for the low voltage BIL side to determine if there are any shortcomings to the design coverage. After placing the shielding structures around the critical equipment, adjust the shielding structure locations to avoid conflicts and provide access. After the transformer is protected, proceed outward for the 500 kV and 230 kV yards.

Determine by company policy, standards, or customer criteria if static shield wiring can be placed over energized equipment or bus. Determine the type of shielding to be used for the substation: masts, static wires, or both. Place the R_a for the equipment on the plan and elevation section views from Table B.20. Place the bus R_a for the center phase and end of bus structures. Mark all areas of conflict where shielding cannot be placed, such as future bays, transmission drops, roads, limited truck or crane access, within fire zones, complex bus arrangements, etc. Calculate the R_a for the shielding static wire structures from Equation (23). An arc or domed shielding design with staggered structure heights and placement can be used to provide additional shielding protection options for unusual terrain and circumstances. Place the mast to maintain access and avoid conflicts with the bus. Maintain minimum spacing for the voltage class for bus to grounded structures. Generally, place the static wires between the property line and the equipment to be protected first. Then add additional shielding wires between equipment to cover the site. See Figure B.53, Figure B.54, and Figure B.55 for the pole placement and design layout. Adjust the static wires until the R_a for all equipment is covered. The following is the R_a calculations for a mast in meters. I_s is set equal to I_c which is from Equation (18) in kA.

500 kV yard

$$R_{a,m} = 0.67\,H^{0.6}\,I^{0.74}$$

$$R_{a,m} = 0.67(30.5\text{ m})^{0.6}(11.786)^{0.74} = 32.3\text{ m}$$

230 kV yard

$$R_{a,m} = 0.67\,H^{0.6}\,I^{0.74}$$

$$R_{a,m} = 0.67(30.5\text{ m})^{0.6}(5.893)^{0.74} = 19.3\text{ m}$$

Copyright © 2013 IEEE. All rights reserved.

Copyright The Institute of Electrical and Electronics Engineers, Inc.
Provided by IHS under license with IEEE
No reproduction or networking permitted without license from IHS

Order Number: 02120914
Sold to:EGAT [700166108393] - VARRIS.Y@EGAT.CO.TH,
Not for Resale,2016-09-15 03:57:48 UTC

Table B.21—500/230 kV transmission substation (Eriksson EGM) R_a for shielding static wires and structures to protect equipment

Equipment	Y_g in meters	Y_g in feet	R_a in meters	R_a in feet
500 kV yard and equipment				
Incoming tower with mast	30.5	100.0	40.5	132.9
Mast structure	30.5	100.0	40.5	132.9
Inside dome static wire	30.5	100.0	32.3	106.0
Outside static wire	27.4	90.0	30.3	99.5
230 kV yard and equipment				
Incoming tower with mast	21.3	70.0	19.6	64.2
Mast structure	30.5	100.0	24.2	79.6
Static wire structure	30.5	100.0	19.3	63.5

Solve the right angle triangle for X with R_a as given above and as seen in Figure B.54. R_c as given by Table B.20 for the high bus. The maximum spacing between two static wires is as below. The process is repeated for the outer static wire mounted at 27.43 m (90 ft) and the middle inner static wire mounted at 30.48 m (100 ft). Figure B.54 shows the stagger layout for the 500 kV bus yard with the two static wire elevations. This example provides a domed protection layout.

500 kV yard

$$X = \sqrt{R_g^2 - \left(\left(Y_C + R_C\right) - Y_g\right)^2}$$

$$X = \sqrt{32.3^2 - ((16.8 + 28.3) - 30.5))^2} = 28.8 \text{ m}$$

where

X is the maximum horizontal distance the shield wire can be placed from the conductor being protected
R_g is length of the radii of attraction arc for the shielding structure
R_c is length of the radii of attraction arc for the electrical component being protected
Y_g is vertical height of the shielding device
Y_c is the vertical height to the electrical component being protected

Copyright © 2013 IEEE. All rights reserved.
Copyright The Institute of Electrical and Electronics Engineers, Inc.
Provided by IHS under license with IEEE
No reproduction or networking permitted without license from IHS
Order Number: 02120914
Sold to:EGAT [700166108393] - VARRIS.Y@EGAT.CO.TH,
Not for Resale,2016-09-15 03:57:48 UTC

230 kV yard

$$X = \sqrt{R_g^2 - \left(\left(Y_C + R_C\right) - Y_g\right)^2}$$

$$X = \sqrt{19.3^2 - ((30.5 - (8.5 + 11.3))^2} = 16.1 \text{ m}$$

The radii of attraction R_a is greater than the mast height, in theory all lightning strikes will likely hit the ground or the shielding structure. Additional side lightning protection is not required but might be desired by the design criteria. To provide side stroke lightning protection the following needs to be true for the shielding design. For transmission substations the maximum horizontal distance X needs to be reduced for sag and wind swing of the static wires for installation spans longer than 60 m (200 ft).

$$R_g \geq Y_g - Y_c$$

$$R_a \sqrt{2} \leq X - X_{sag/swing}$$

B.5.8.2 500/230 kV transmission substation model utilizing the Eriksson EGM with the combination of masts and static wires with stagger mounting of structure placement shielding design plan

The outer static wires have been moved inward to 9.14 m (30 ft) and 12.2 m (40 ft) of the buswork within the 500 kV yard. The middle inside static wires in the 500 kV yard have been raised to provide a domed protection canopy. To allow for one row of static wires and structures between the two 500 kV bus structures, the poles will be shifted to have 50.3 m (165 ft) horizontal separation between the static wires. The objective is to cover all equipment R_a radii of attraction by the mast structure protection and use the static wires to protect the bus. Figure B.55 shows the shielding protection layout and Figure B.56 shows the final pole and static wire placements to meet the objective of no bus crossing and more side protection.

Copyright © 2013 IEEE. All rights reserved.

Copyright The Institute of Electrical and Electronics Engineers, Inc.
Provided by IHS under license with IEEE
No reproduction or networking permitted without license from IHS

Order Number: 02120914
Sold to:EGAT [700166108393] - VARRIS.Y@EGAT.CO.TH,
Not for Resale,2016-09-15 03:57:48 UTC

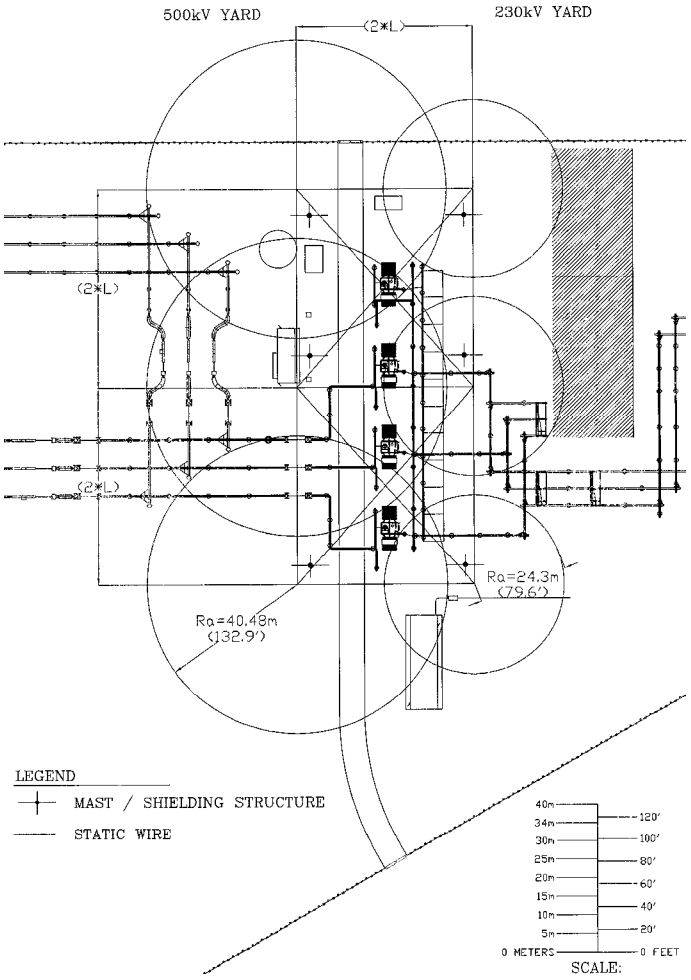

Figure B.53—500/230 kV transmission substation shielding design plan view layout with dimensions for the Eriksson EGM example to provide a six mast rectangle protection for a complex structure area

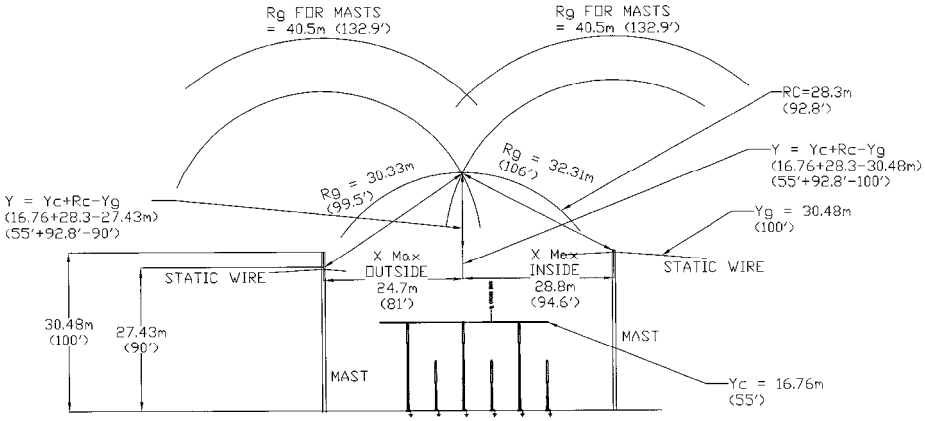

Figure B.54—500/230 kV transmission substation shielding design elevation view layout with dimensions for the Eriksson EGM example with a domed 500 kV static wire and mast structure layout

Copyright © 2013 IEEE. All rights reserved.

Copyright The Institute of Electrical and Electronics Engineers, Inc.
Provided by IHS under license with IEEE
No reproduction or networking permitted without license from IHS

Order Number: 02120914
Sold to:EGAT [700166108393] - VARRIS.Y@EGAT.CO.TH,
Not for Resale,2016-09-15 03:57:48 UTC

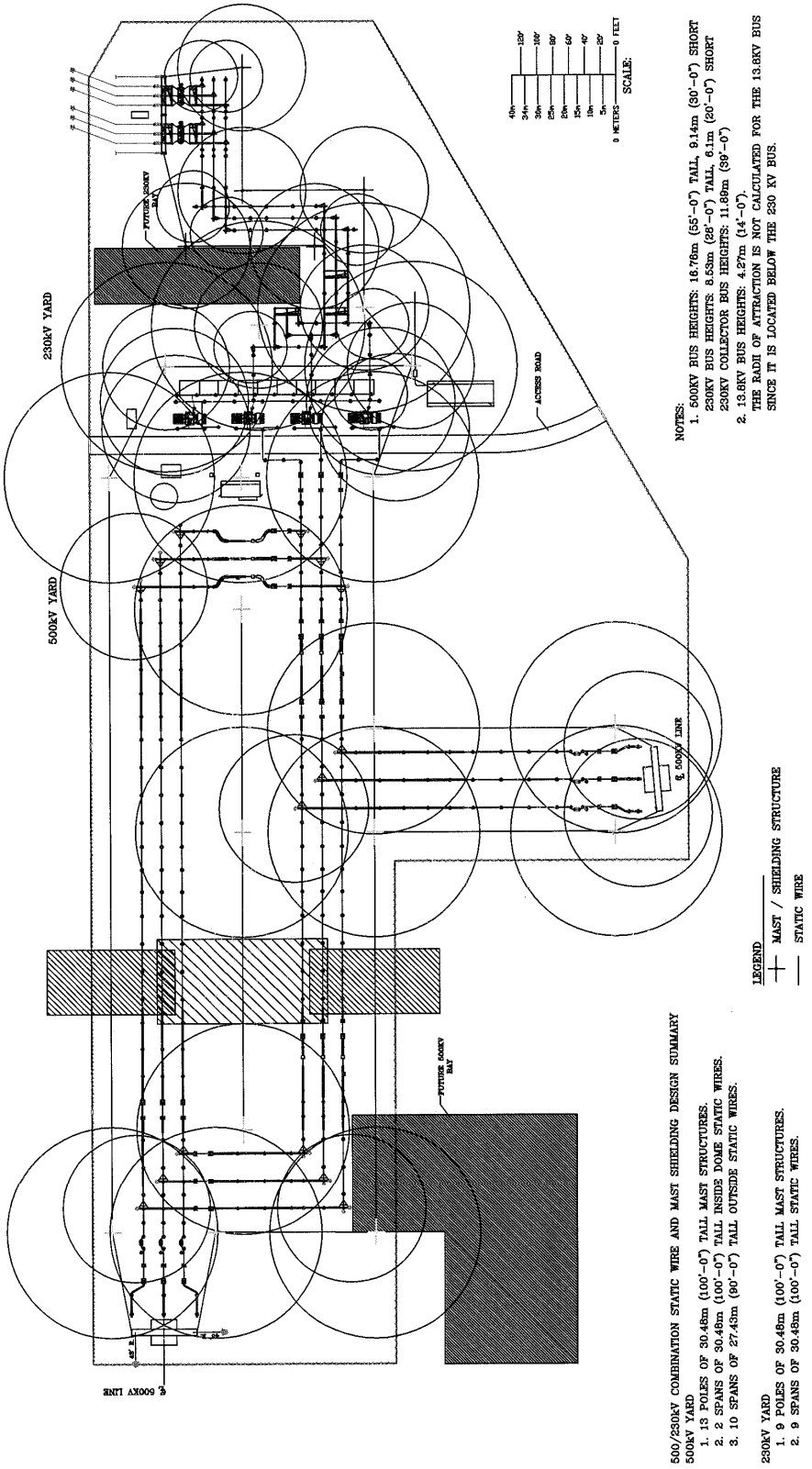

Figure B.55—500/230kV transmission substation shielding design plan layout with dimensions for the Eriksson EGM example utilizing the combination of mast and static wire structures

Copyright © 2013 IEEE. All rights reserved.

Copyright The Institute of Electrical and Electronics Engineers, Inc.
Provided by IHS under license with IEEE
No reproduction or networking permitted without license from IHS

Order Number: 02120914
Sold to:EGAT [700166108393] - VARRIS.Y@EGAT.CO.TH,
Not for Resale,2016-09-15 03:57:48 UTC

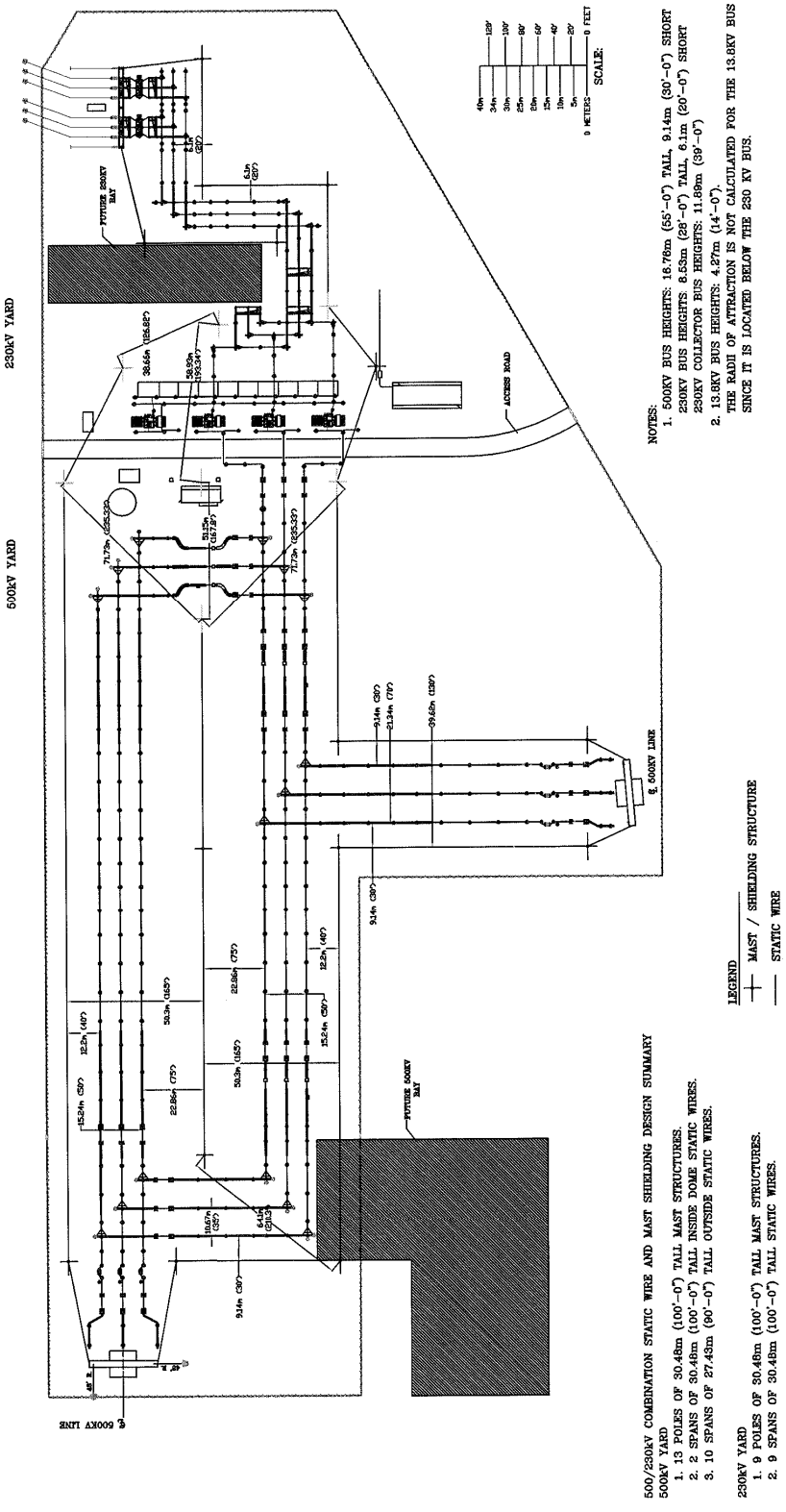

Figure B.56—500/230kV transmission substation shielding design final plan view layout with dimensions for the Eriksson EGM example utilizing the combination of mast and static wire structures

Copyright © 2013 IEEE. All rights reserved.

Copyright The Institute of Electrical and Electronics Engineers, Inc.
Provided by IHS under license with IEEE
No reproduction or networking permitted without license from IHS

Order Number: 02120914
Sold to:EGAT [700166108393] - VARRIS.Y@EGAT.CO.TH,
Not for Resale,2016-09-15 03:57:48 UTC

B.6 Comparison of results of sample calculations and new methods and models

B.6.1 Results for a 69 kV substation

Table B.22 gives the results of the application of masts and shield wires as shown in the sample calculations for the 69 kV substation. The required number of masts and/or shield wires is identical for the fixed angle and the empirical methods, although the empirical method permits a shorter mast. EGM–revised is the result from a program called SBSHLD. Clause 7 reviewed four new models and/or methods, namely the collection volume/field intensification factor method (FIFM), leader progression model (LPM), leader inception theory (LIT), and the self-consistent leader inception model (SLIM). While no sample calculations are included in this standard, Table B.22 provides the user with the results had those methods been used for the same substation.

Table B.22—Comparison of results for a 69 kV substation

Method	Number of masts required	Number of wires required
Fixed angle	1	2
Empirical	1	2
EGM–Mousa	6	4
EGM–RSM	6	4
EGM–Eriksson	7	5
CVM/FIFM	6	4
LPM (estimated)	8	4
LIT	6	3

EGM methods require more masts than empirical or fixed-angle methods because the EGM methods attempt to provide 100% flashover protection, whereas the first two methods permit a small failure rate.

B.6.2 Results for 500/230 kV substation

Table B.23 gives the results for the 500/230 kV substation example. The number of masts required for protection varies depending on the method used. An explanation does exist for some of the variation, however:

a) Each sample calculation method was prepared by a different engineer. Thus, the results reflect the degree of optimization and conservatism exercised by each engineer.

b) The designer of the computer program incorporated two conservative factors not used in the rolling sphere method. The first of these was to add a 0.9 multiplier in Equation (17) as suggested by Gilman and Whitehead [B54]. The second factor that made the computer design more conservative was that the crest value of the ac bus voltage was subtracted from the withstand voltage of the insulators. (The assumption is that the ac polarity of the bus voltage at the instant the lightning strikes is such as to increase the stress on the insulators and reduce their withstand ability.) This factor can be significant in EHV substations. Of course, the same factors could have been applied to the equations used to arrive at the striking distance for the rolling sphere method. With this modification the results by the two methods would be very similar.

Copyright © 2013 IEEE. All rights reserved.

Copyright The Institute of Electrical and Electronics Engineers, Inc.
Provided by IHS under license with IEEE
No reproduction or networking permitted without license from IHS

Order Number: 02120914
Sold to:EGAT [700166108393] - VARRIS.Y@EGAT.CO.TH,
Not for Resale,2016-09-15 03:57:48 UTC

Table B.23—Comparison of results for a 500/230 kV substation

Method	Number of masts, 500 kV	Number of masts, 230 kV	Number of masts, total	Number of wires, 500 kV	Number of wires, 230 kV	Number of wires, total
Fixed angle	53	8	61	11	2	13
Empirical	32	11	43	10	2	12
EGM–Mousa	46	16	62	13	5	18
EGM–RSM	32	12	44	11	5	16
EGM–Eriksson	36	16	52	13	5	18
CVM/FIFM	28	12	40	11	5	16
LPM (estimated)	45	17	62	13	6	19
LIT	38	13	51	11	5	16

Copyright © 2013 IEEE. All rights reserved.

Copyright The Institute of Electrical and Electronics Engineers, Inc.
Provided by IHS under license with IEEE
No reproduction or networking permitted without license from IHS

Order Number: 02120914
Sold to:EGAT [700166108393] - VARRIS.Y@EGAT.CO.TH,
Not for Resale,2016-09-15 03:57:48 UTC

Annex C

(informative)

Calculation of corona radius and surge impedance under corona

C.1 Corona radius

In case of a single conductor, the corona radius R_c is given by Anderson [B7]:

$$R_c \times \ln\left(\frac{2xh}{R_c}\right) - \frac{V_c}{E_0} = 0 \tag{C.1}$$

where

- R_c is the corona radius in meters
- h is the average height of the conductor in meters
- V_c is the allowable insulator voltage for a negative polarity surge having a 6 μs front in kilovolts (V_c= the BIL for post insulators)
- E_0 is the limiting corona gradient, this is taken equal to 1500 kV/m

Equation (C.1) can be solved by trial and error using a programmable calculator (an approximate solution is given in Figure C.1).

In the case of bundle conductors, the radius of the bundle under corona R_c' (Anderson [B7]) is taken as follows:

$$R_c' = R_0 + R_c \tag{C.2}$$

where

- R_c is the value for a single conductor as given by Equation (C.1)
- R_0 is the equivalent radius of the bundle

The calculation method of R_0 is given in Equation (C.3).

Copyright © 2013 IEEE. All rights reserved.
Copyright The Institute of Electrical and Electronics Engineers, Inc.
Provided by IHS under license with IEEE
No reproduction or networking permitted without license from IHS
Order Number: 02120914
Sold to:EGAT [700166108393] - VARRIS.Y@EGAT.CO.TH,
Not for Resale,2016-09-15 03:57:48 UTC

C.2 Equivalent radius for bundle conductor

In the case of a twin conductor bundle, the equivalent radius R_0 [B7] is given by:

$$R_0 = \sqrt{r \times l} \tag{C.3}$$

where

r is the radius of subconductor in meters
l is the spacing between adjacent conductors in meters

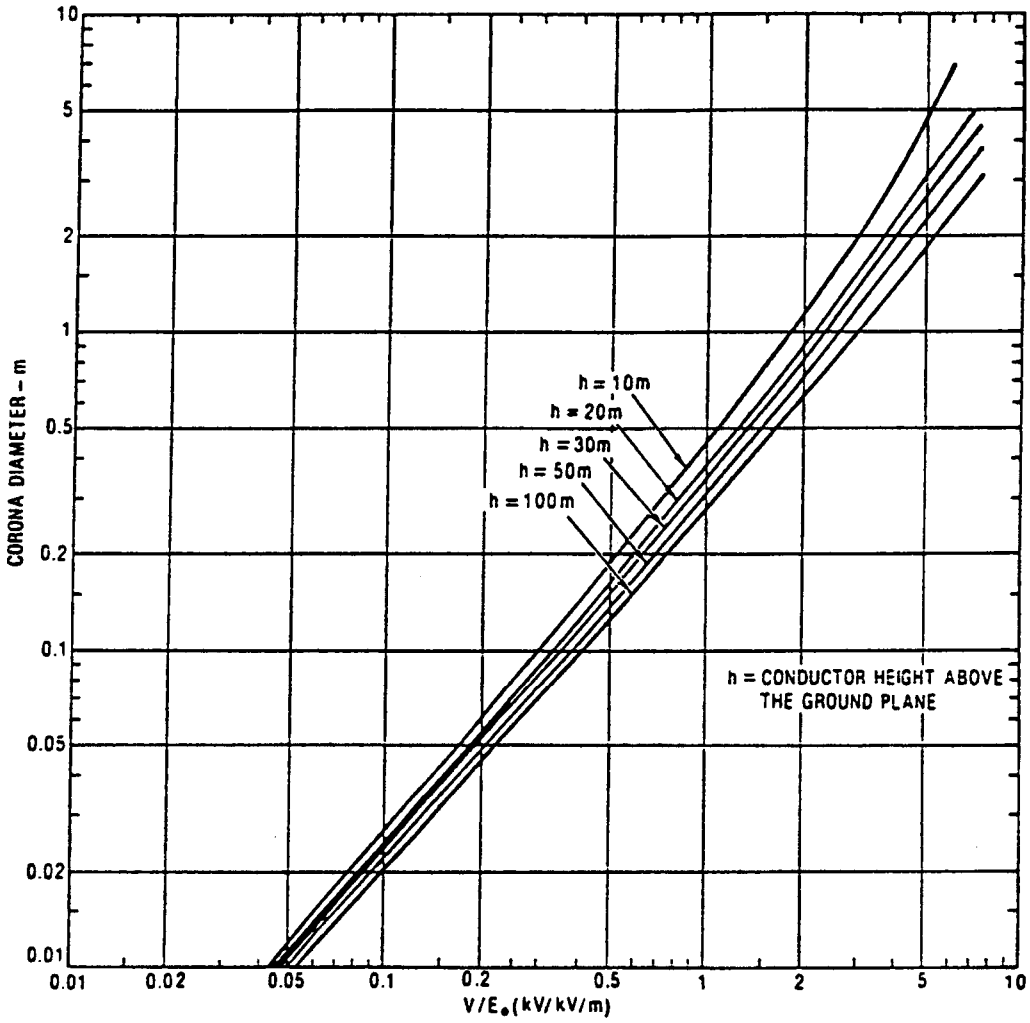

Reprinted with permission from *Transmission Line Reference Book 345 kV and Above,* Second Edition, Revised. Copyright © 1982, Electric Power Research Institute, Palo Alto, CA.

Figure C.1—Approximate diameter of corona sheath around a single conductor under impulse conditions

Copyright © 2013 IEEE. All rights reserved.
--`,,,,,,`-`-`,,`,,`,`,,`---
Copyright The Institute of Electrical and Electronics Engineers, Inc.
Provided by IHS under license with IEEE
No reproduction or networking permitted without license from IHS
Order Number: 02120914
Sold to:EGAT [700166108393] - VARRIS.Y@EGAT.CO.TH,
Not for Resale,2016-09-15 03:57:48 UTC

In the case of three or more bundled conductors (see Figure C.2):

$$r_e = r\left(g \times \frac{s}{r}\right)^{\frac{n-1}{n}} \tag{C.4}$$

where

- n is the number of subconductors in bundle
- g is equal to 1 for bundle of 1, 2, or 3 subconductors, and is equal to 1.12 for bundle of 4 subconductors
- d is the conductor diameter cm [in]
- s is the distance between conductors, cm [in]
- r is the conductor radius, cm [in] and is given by $d/2$
- r_e is the equivalent single-conductor radius of bundle subconductors, cm [in]

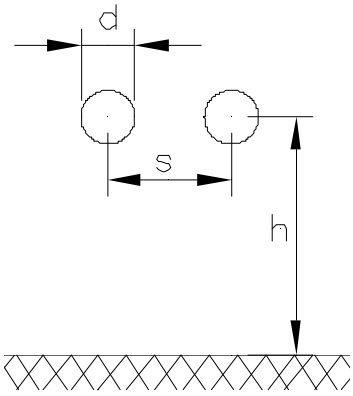

Figure C.2—Bundle conductor—single phase

For additional information, refer to IEEE Std 605™ [B70].

C.3 Surge impedance under corona

The surge impedance of conductors under corona in ohms is given by Brown [B24]:

$$Z_s = 60 \times \sqrt{\ln\left(\frac{2 \times h}{R_c}\right) \times \ln\left(\frac{2 \times h}{r}\right)} \tag{C.5}$$

where

- h is the average height of the conductor
- R_c is the corona radius (use Equation (C.2) as appropriate)
- r is the metallic radius of the conductor, or equivalent radius in the case of bundled conductors

Copyright © 2013 IEEE. All rights reserved.

Copyright The Institute of Electrical and Electronics Engineers, Inc.
Provided by IHS under license with IEEE
No reproduction or networking permitted without license from IHS

Order Number: 02120914
Sold to:EGAT [700166108393] - VARRIS.Y@EGAT.CO.TH,
Not for Resale,2016-09-15 03:57:48 UTC

Annex D

(informative)

Risk evaluation

D.1 Introduction

Direct stroke shielding is mostly used to allow designers to meet the required criteria for safety and reliability. As with most engineering designs, there are trade-offs between cost and performance. In many cases it is difficult to evaluate design alternatives. This annex provides the designer with information to compare alternatives for the purposes of selecting a design.

In some cases an extensive risk evaluation is required. This type of evaluation is beyond the scope of the present document, but IEC 62305-2, Protection against lightning—Part 2: Risk management, can be used as a guide.

D.2 Sample calculation

The 69 kV substation studied in Annex B will be used in this section for example calculations. For the calculations we are assuming the station has an equipment area of 875 m^2 (25 m × 35 m) and an isokeraunic level of 90 annual thunderstorm days.

D.2.1 Substation without shielding

Without direct stroke lighting protection, the failure rate is determined by the number of flashes predicted to strike within the station area. The number of flashes per unit area expected in the vicinity of the substation is quantified by the *ground flash density* (GFD). GFD is calculated using Equation (11) or Equation (12). Using Equation (11):

$N_k = 0.12 \times T_d$

$N_k = 0.12 \times 90 = 10.8$ flashes/km^2/year

Next, calculate the expected number of flashes by multiplying the result by the area of the station. For 90 annual thunderstorm days, the number of flashes is:

$X = 10.8$ flashes/km^2/year × 0.000 875 km^2 = 0.009 45 flashes/year or 106 years between flashes.

This can be further refined to account for only those strokes above the acceptable level—but this has not been done for this example.

D.2.2 Substation with complete shielding

Complete shielding of a substation is typically used to reduce the failures due to lightning to a tolerable level. The failure rate cannot be reduced to zero due to the unpredictability of lightning. All protection methods (with the exception of a continuous metallic shielding) have some failure rate. These failure rates are examined below. Throughout the review, we will continue to review the failure rates as it relates to the station with the 90 annual thunderstorm days.

Copyright © 2013 IEEE. All rights reserved.

Copyright The Institute of Electrical and Electronics Engineers, Inc.
Provided by IHS under license with IEEE
No reproduction or networking permitted without license from IHS

Order Number: 02120914
Sold to:EGAT [700166108393] - VARRIS.Y@EGAT.CO.TH,
Not for Resale,2016-09-15 03:57:48 UTC

D.2.2.1 Shielding based on empirical methods

The fixed angle failure rate is 0.1 to 0.2 failures/100 km/year. This failure rate is based on historical transmission line experience. It is assumed that the fixed-angle method for substations would have a similar failure rate. Empirical curves are available for failure rates of 0.1%, 1.0%, 5.0%, 10%, and 15%. In Annex B, the design is based on a selected failure rate for the empirical method of 0.1%. Using 0.1%, the mean time between failures would be:

X = 0.009 45 flashes/year × 0.001

X = 0.000 009 45 or 105 820 years between flashes that reach the equipment or bus.

D.2.2.2 Shielding based on EGM methods

Depending on BILs, the failure rate for the EGM methods is typically small, e.g., << 1%. Based on the same substation above, but with a 0.05% failure rate, the probabilities are:

X = 0.009 45 flashes/year × 0.0005

X = 0.000 004 73 or 211 640 years between flashes that reach the equipment or bus

D.2.2.3 Selection of shielding method

While there are multiple methods for designing lightning protection, substation engineers might find some more appropriate than others in certain situations.

For example, Table B.22 indicates that for the same 69 kV substation, the empirical method requires one static mast and two wires, while Eriksson's EGM requires seven masts and five wires. At the same time, D.2.2.1 and D.2.2.2 show that the EGM method provides a failure rate due to lightning of about two times lower than the empirical method.

Here, the substation engineer should evaluate the feasibility of using seven masts versus one. Not only is designing for seven masts more expensive, it could reduce the chances of site plan approval by local authorities or complicate the evacuation of failed equipment. The substation engineer should evaluate the practicality and constructability of each shielding method's requirements while weighing the tolerance to a slightly higher risk of shielding failure.

D.2.3 Substation with partial shielding

In some cases the substation designer might not be able to fully shield a substation. This could be due to technical or economic reasons. The substation designer will need to evaluate the increased risk of an unprotected area and decide if it's acceptable.

For the three conditions described in 6.3.1, 6.3.2, and 6.3.3 of this guide, if I_s is chosen according to Equation (18) there should theoretically be no equipment failures due to direct strokes. This is because only those strokes that could produce a surge voltage wave less than the BIL of the equipment should be able to penetrate the shielding system. The designer is then faced with the problem of first determining the level of failure risk he or she is willing to base the design on, and then developing a design that will meet this criteria. The following discusses a method of determining the unprotected area of a design and show how to calculate expected failure rates.

Copyright © 2013 IEEE. All rights reserved.

Copyright The Institute of Electrical and Electronics Engineers, Inc.
Provided by IHS under license with IEEE
No reproduction or networking permitted without license from IHS

Order Number: 02120914
Sold to:EGAT [700166108393] - VARRIS.Y@EGAT.CO.TH,
Not for Resale,2016-09-15 03:57:48 UTC

To visualize an unprotected area, refer to Figure 25, Figure 26, and Figure 27. Assume that equipment is sized and located as shown and further assume that, based on equipment BILs, equipment can withstand stroke currents less than I_{s1}. The associated striking distance is S_1. Based on the layout, the shield mast d_{s1} should provide protection for all stroke currents greater than I_{s1}. However, those stroke current magnitudes between I_{so} and I_{s1} could reach equipment and would be expected to cause damage. The protected area for this condition would be the shaded area shown in Figure 27.

Equation (10) or Figure 4 can be used to determine the probability that any stroke will be greater than I_s, which is the level above which the shield masts will intercept the stroke. This probability is $P(I_s)$. The same equation or figure can be used to determine the probability that the stroke will be greater than I_{so}, where I_{so} is the level of stroke current that can be handled by the equipment based on its BIL. This probability is $P(I_{so})$. The probability that a stroke is less than I_s is $1.0 - P(I_s)$ or $P(<I_s)$. The probability that a stroke is less than I_{so} is $1.0 - P(I_{so})$ or $P(<I_{so})$. For all lightning strokes that descend upon the shaded area of Figure 25, the probability that equipment damage will occur is:

$P(<I_s) - P(<I_{so})$ or $P(I_{so}) - P(I_s)$

These probabilities can best be demonstrated by the following example:

a) Assume that the stroke current for the striking distance, S_o, is 4.03 kA. Strokes of this magnitude could strike within the protected area.

b) Assume the striking distance S, above which protection is provided, is 40 m. From Equation (4), the stroke current above which protection is provided is 11.89 kA.

c) The probability that a stroke will exceed 4.03 kA, using Equation (10) or Figure 4, is 0.990.

d) The probability that a stroke will exceed 11.89 kA, using Equation (10) or Figure 4, is 0.861.

e) Therefore, the probability that a stroke which descends upon the unprotected area will be of a magnitude that can cause equipment damage and failure is 0.990 − 0.861 = 0.129 or 12.9%.

The substation designer is basically concerned with the rate of failure of the shielding design or the number of years expected between failures. The methodology was presented above for the designer to determine the probability that a stroke in the unprotected area would cause failure. By knowing the number of flashes expected to descend upon the area, the failure rate can be determined.

The number of flashes per unit area expected in the vicinity of the substation is the GFD. GFD is calculated using Equation (11), Equation (12), Equation (13), or Equation (14) . The number of strokes expected to descend upon the area is the GFD multiplied by the unprotected area. The annual failure rate is the product of the number of strokes to the area times the probability that the stroke in the area will cause failure.

Example

a) Assume the outside radius of the unprotected area is 35 m and the inside radius of the unprotected area is 22 m. The unprotected area is $\pi[(35)^2 - (22)^2] = 2328$ m^2 or 2.328×10^{-3} km^2.

b) Assume the isokeraunic level is 90 thunderstorm-days per year. (T values across the USA can be read from Figure 6. The GFD, from Equation (11), is 10.8 flashes per square kilometer per year.

c) The annual number of flashes expected to descend into the unprotected area is $10.8 \times 2.328 \times 10^{-3} = 0.025\ 14$ flashes/year.

d) The annual expected number of equipment failures due to direct lightning strokes, using the 0.129 probability from above, $0.025\ 14 \times 0.129 = 0.003\ 24$ failures/year or 308 years between failures.

The above calculated failure rate would be for the simplified single mast substation described in the example. If a utility had 100 such substations of identical design scattered throughout its system, the total system substation failure rate due to direct strokes would be 308 divided by 100, or approximately 3 years between failures.

Copyright © 2013 IEEE. All rights reserved.

Copyright The Institute of Electrical and Electronics Engineers, Inc.
Provided by IHS under license with IEEE
No reproduction or networking permitted without license from IHS

Order Number: 02120914
Sold to:EGAT [700166108393] - VARRIS.Y@EGAT.CO.TH,
Not for Resale,2016-09-15 03:57:48 UTC

Annex E

(informative)

IEEE Questionnaire—2007

The total number of respondents: 35

Consultants: 5

Utilities: 30

LIGHTNING PROTECTION SURVEY

1. Are you currently using IEEE Standard 998 to design lightning protection of your substations?

Consultants: 5 (100%)

Utilities: 18 (60%)

2. What means of lightning protection (lightning masts, shield wire, etc.) are you currently using to protect substation equipment, bus, control house, etc.?

Consultants:

Both lightning masts, shield wires:	5 (100%)

Utilities:

Lightning masts only:	1 (3.3%)
Shield wires only:	5 (16.7%)
Both masts and shield wires:	21 (70%)
Only surge arresters:	3 (10%)

3. What method (fixed angle, Wagner, rolling spheres, etc.) are you currently using in substation lightning protection studies to define what means of protection should be used, where they need to be positioned, and how effective they are in protecting substation from a direct lightning stroke?

Consultants:

Fixed angle:	1 (20%)
Both fixed angle and rolling spheres:	1 (20%)
Rolling spheres:	3 (60%)

Copyright © 2013 IEEE. All rights reserved.

Copyright The Institute of Electrical and Electronics Engineers, Inc.
Provided by IHS under license with IEEE
No reproduction or networking permitted without license from IHS

Order Number: 02120914
Sold to:EGAT [700166108393] - VARRIS.Y@EGAT.CO.TH,
Not for Resale,2016-09-15 03:57:48 UTC

Utilities:

Do not conduct studies:	4 (13.3%)
Wagner:	1 (3.3%)
Fixed angle:	4 (13.3%)
Both fixed angle and rolling spheres:	6 (20%)
Rolling spheres:	15 (50%)

4. Did you use any other method in the past? If "yes," what was the reason to stop using it?

Consultants:

Fixed angle changed to rolling spheres:	1 (20%)

Utilities:

Fixed angle changed to rolling spheres:	7 (23.3%)
Wagner changed to rolling spheres:	2 (6.6%)

5. Are you planning to use a different method in the future? If "yes," what is the reason to switch from the method you are presently using?

Consultants: 0

Utilities: 1 (3.3%) (from fixed angle to rolling spheres)

6. Did you have any occasion when lightning protection you selected and installed failed to protect substation from the lightning strike? If "yes," what was the root cause analysis for this failure?

Consultants: 0

Utilities (with indicated reasons):

Lack of any means of shielding:	2 occasions
Wagner method deficiency:	2 occasions
Wrong location of shield wires:	4 occasions
Lack of full coverage:	1 occasion
Unknown reason:	5 occasions

Average frequency of lightning strikes: 1 in 20 years

NOTE—A previous survey completed in 1991 titled: "A Survey of Industry Practices Regarding Shielding of Substations Against Direct Lightning Strokes" completed by this working group is available on IEEE Xplore Digital Library.

Copyright © 2013 IEEE. All rights reserved.

Copyright The Institute of Electrical and Electronics Engineers, Inc.
Provided by IHS under license with IEEE
No reproduction or networking permitted without license from IHS

Order Number: 02120914
Sold to:EGAT [700166108393] - VARRIS.Y@EGAT.CO.TH,
Not for Resale,2016-09-15 03:57:48 UTC

Annex F

(informative)

The Dainwood method

Dainwood's method (introduced in a 1974 M.Sc. thesis) [B43] is an application to the configurations encountered in substations of a method proposed in 1970 by Braunstein [B22] for use on power lines. In Braunstein's method, the charge density along the length of the downward leader is assumed to be constant. The leader is assumed to progress in the vertical direction at a velocity equal to 0.1% of the speed of light, and the charge density is calculated as a function of the current of the return stroke. Wave equations are then used to calculate the strength of the electric field in space at the location of the object that is to be analyzed. Upward streamers are assumed to be generated from the object when the electric field reaches the critical value. That critical value was set at 10 kV/cm for the surface of the ground, 3 kV/cm for shield wires, and 5 kV/cm for phase conductors. Braunstein's method was not adopted by the industry in favor of the approach used by Young, et al. and by Whitehead and his associates. Similarly, the adaptation to substations proposed by Dainwood received very limited application.

Copyright © 2013 IEEE. All rights reserved.

Copyright The Institute of Electrical and Electronics Engineers, Inc.
Provided by IHS under license with IEEE
No reproduction or networking permitted without license from IHS

Order Number: 02120914
Sold to:EGAT [700166108393] - VARRIS.Y@EGAT.CO.TH,
Not for Resale,2016-09-15 03:57:48 UTC

Annex G

(informative)

Direct stroke lightning protection

(Reproduction of [B115], which is not widely available. Reprinted with permission.)

DIRECT STROKE LIGHTNING PROTECTION

J. T. Orrell
Black & Veatch, Engineers-Architects

Presented At

EEI Electrical System and Equipment
Committee Meeting
Washington, DC

October 25, 1988

Copyright © 2013 IEEE. All rights reserved.

Copyright The Institute of Electrical and Electronics Engineers, Inc.
Provided by IHS under license with IEEE
No reproduction or networking permitted without license from IHS

Order Number: 02120914
Sold to:EGAT [700166108393] - VARRIS.Y@EGAT.CO.TH,
Not for Resale,2016-09-15 03:57:48 UTC

DIRECT STROKE LIGHTNING PROTECTION

J. T. Orrell
Black & Veatch, Engineers-Architects

INTRODUCTION

The electric utility engineer is required to design facilities that will operate reliably in a hostile environment. There are many "enemies" in this hostile environment, such as wind, ice, pole decay, and vandals who attack electric utility facilities, but perhaps the toughest enemy to understand and guard against is mother nature's lightning.

Lightning has been with us since the beginning of time, but only in comparatively recent years has the phenomena become even partially understood. Over the past 10 years substantial progress has been made by research scientists and engineers in resolving the physical characteristics of a lightning flash and in refining lightning statistics. The development of a lightning stroke and the flashover of insulators and other electric power equipment is a very complex electromagnetic event, and good hard data about the subject is lacking. In spite of these problems and complexities, the practicing engineer must do his job, which is to design, construct, operate, and maintain a system that will remain in service almost 100 percent of the time, even during lightning conditions.

This paper addresses new lightning protection design concepts as they relate to direct stroke protection of electric utility substations. The paper develops the basic concept of the lightning stroke, and describes equipment basic insulation level (BIL), simplistic modeling of a lightning shielding system, and shielding system failure probability. It is not the intent of this paper to provide full design guide details for complex substation lightning protection. Such details will be published in the near future by the IEEE Transmission Substation Working Group E-5, of which the author of this paper is a member.

Mr. Orrell may be contacted at (913) 339-2000.

LIGHTNING STROKE PHENOMENA

STROKE FORMATION

Numerous theories have been advanced regarding the formation of charge centers, charge separation within a cloud, and the ultimate development of lightning strokes.

The processes occurring within a cloud formation which cause charge separation are complicated, but what is important to the practicing utility engineer is that a charge separation occurs in thunderstorm clouds. Experiments using balloons equipped with electric gradient measuring equipment have been performed to investigate typical charge distribution in thunderclouds. These experiments have shown that, in general, the main body of a thundercloud is negatively charged and the upper part positively charged. A concentration of positive charge appears to exist frequently in the base of the cloud. The charge distribution in the cloud causes an accumulation of charge of the opposite polarity on the earth's surface and on objects (trees, buildings, electric power lines, and structures, etc.) beneath the cloud. An example of a charged cloud and the resulting electric fields is shown on Figure 1.

The electrical charge concentrations within a cloud are constrained to the size of the cloud. The cloud size, in relation to the earth, is small. Therefore, the electrical gradient in the cloud is much greater than at the earth. Because of this, an electrical discharge tends to be initiated at the cloud rather than at the ground.

The actual stroke development occurs in a two-step process. The first step is ionization of the air surrounding the charge center and the development of "step leaders" which propagate charge from the

Copyright © 2013 IEEE. All rights reserved.

Copyright The Institute of Electrical and Electronics Engineers, Inc.
Provided by IHS under license with IEEE
No reproduction or networking permitted without license from IHS

Order Number: 02120914
Sold to:EGAT [700166108393] - VARRIS.Y@EGAT.CO.TH,
Not for Resale,2016-09-15 03:57:48 UTC

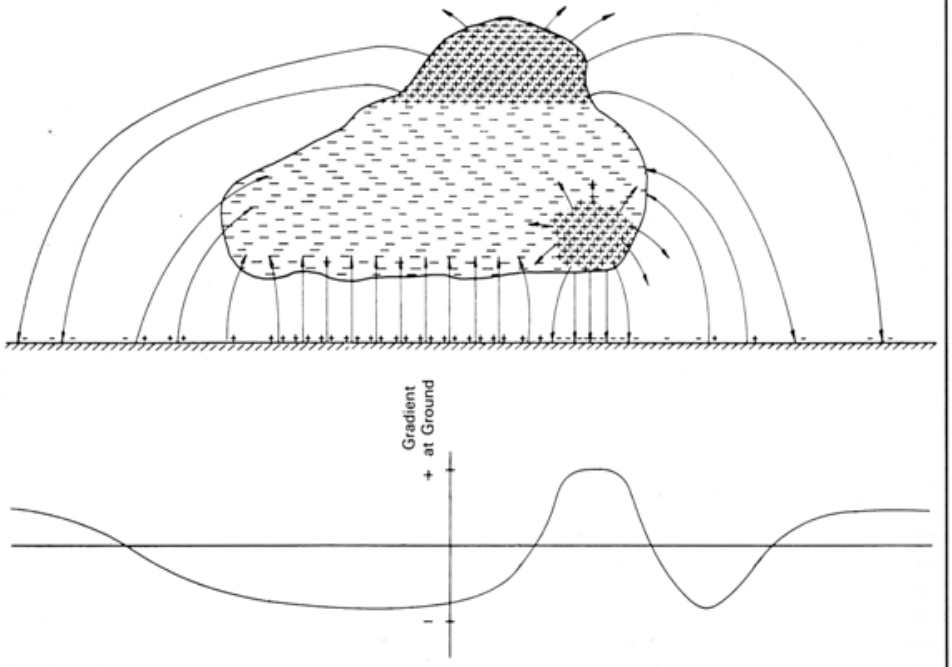

FIGURE 1
CHARGED CLOUD AND RESULTING ELECTRIC FIELDS

cloud into the air. Current magnitudes associated with step leaders are small (on the order of 100 amperes) in comparison with the final stroke current. The step leaders progress in a random direction in discrete steps from 10 to 80 meters in length. Their most frequent velocity of propagation is about 0.05 percent the speed of light, or approximately 500,000 feet per second. It is not until the step leader is within ''striking distance'' of the point to be struck that the leader is positively diverted toward this point. ''Strike distance'' is the length of the last step leader under the influence of attraction toward the point of opposite polarity to be struck.

The second step in the development of a lightning stroke is the ''return stroke.'' The return stroke is the extremely bright streamer which propagates upward from the earth to the cloud, following the same path as the main channel of the downward step leaders. This return stroke is the actual flow of stroke current, which averages about 31,000 amperes, and is actually the flow of charge from earth to cloud to neutralize the charge center. The *Electrical Transmission and Distribution Reference Book* cites the velocity of the return stroke propagation is about 10 percent the speed of light, or approximately 100 by 106 feet per second. The amount of charge (usually negative) lowered to the

NOTE—“100 by 106” is corrected to “100 to 106”.

Copyright © 2013 IEEE. All rights reserved.

Copyright The Institute of Electrical and Electronics Engineers, Inc.
Provided by IHS under license with IEEE
No reproduction or networking permitted without license from IHS

Order Number: 02120914
Sold to:EGAT [700166108393] - VARRIS.Y@EGAT.CO.TH,
Not for Resale,2016-09-15 03:57:48 UTC

earth from the cloud is equal to the charge (usually positive) that flows upward from the earth. Since the propagation velocity of the return stroke is so much greater than the propagation velocity of the step leader, the return stroke exhibits a much larger current flow (rate of charge movement). Magnetic-link investigations on electrical transmission systems indicate that approximately 90 percent of all strokes are seen as negative charge flows to the transmission system.

The various stages of a stroke development are shown on Figure 2. Approximately 55 percent of all lightning flashes consist of multiple strokes which traverse the same path formed by the initial stroke. Their stepped leader has a propagation velocity much greater than that of the initial stroke (approximately 3 percent the speed of light) and is referred as a "dart leader."

STRIKE DISTANCE

Return stroke current magnitude and strike distance (length of the last step leader) are interrelated. This follows from the premise that small charge centers from which low return stroke currents develop contain less energy to charge the step leader than does a large charge center. The strike distance and the ultimate return stroke current are related by the following equation from the 1982 *Transmission Line Reference Book—345 kV and Above*.

$$S = 10\, I_s^{0.65} \qquad \text{(Equation 1)}$$

or

$$I_s = 0.029\, S^{1.54} \qquad \text{(Equation 2)}$$

where

S = strike distance in meters, and

I_s = return stroke current in kiloamperes (kA).

This relationship is illustrated on Figure 3, which shows strike distance versus return stroke current, hereafter referred to as stroke current in this paper.

STROKE WAVE SHAPE AND PROBABILITIES

Neither the current magnitude nor wave shape of all lightning strokes is identical. The response of electric power equipment to lightning surges is a function of wave shape and current magnitude. Therefore, in the design of systems, it is important to know what typical stroke wave shapes to expect, the probability of variance of these wave shapes, and the probability of various stroke current magnitudes.

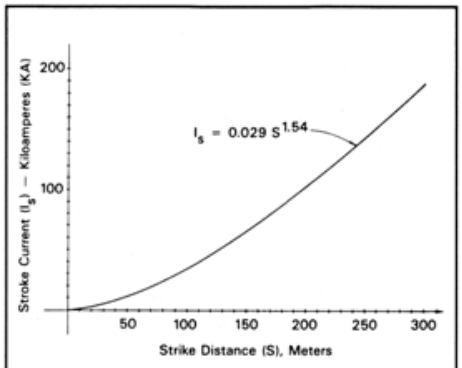

FIGURE 3
STRIKE DISTANCE VERSUS STROKE CURRENT

A lightning stroke is movement of electrical charge, or coulombs, from one point to another in the form of a "wave" of charge, as depicted on Figure 4. Anyone observing the passage of a lightning surge would observe a very rapid change in the number of coulombs, followed by a much slower change in the number of coulombs as the surge passed. Observance of this event would be similar to floating in a calm pool of water and suddenly observing a wave of water approaching. As the wave passed, the observer would rise to the crest of the wave and then would drop back to his original position as the wave completely passed.

Since the definition of current is the time rate of change of electrical charge, or $i(t) = dq/dt$, the movement of electrical charge in a lightning stroke is current. If an observer was in a fixed location observing the passage of a lightning wave, the time required to witness the passage of the crest of the wave would be very short. If he observed more than one stroke, he would discover that the time required to observe the passage of the crest of each wave differs. This holds true even among multiple strokes in any flash. Figure 5 shows the current wave

Copyright © 2013 IEEE. All rights reserved.

Copyright The Institute of Electrical and Electronics Engineers, Inc.
Provided by IHS under license with IEEE
No reproduction or networking permitted without license from IHS

Order Number: 02120914
Sold to:EGAT [700166108393] - VARRIS.Y@EGAT.CO.TH,
Not for Resale,2016-09-15 03:57:48 UTC

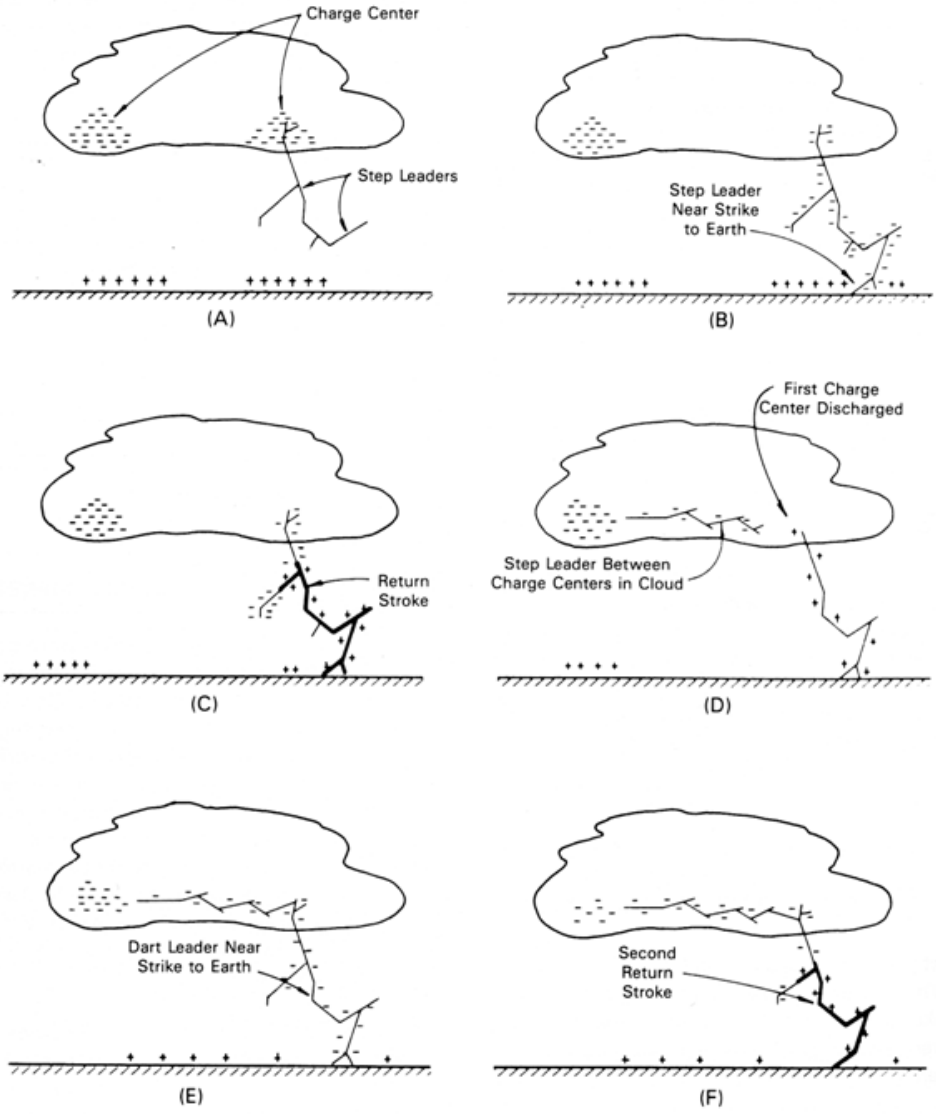

Adapted from: *Electrical Transmission and Distribution Reference Book,* by Central Station Engineers of the Westinghouse Electric Corporation, East Pittsburgh, Pennsylvania, Fourth Edition, 1964.

FIGURE 2
CHARGE DISTRIBUTION AT VARIOUS STAGES OF LIGHTNING DISCHARGE

Copyright © 2013 IEEE. All rights reserved.

--`,,,,,,`,```,,`-`-`,,`,,`,`,-`-`,```,,,`---

Copyright The Institute of Electrical and Electronics Engineers, Inc.
Provided by IHS under license with IEEE
No reproduction or networking permitted without license from IHS

Order Number: 02120914
Sold to:EGAT [700166108393] - VARRIS.Y@EGAT.CO.TH,
Not for Resale,2016-09-15 03:57:48 UTC

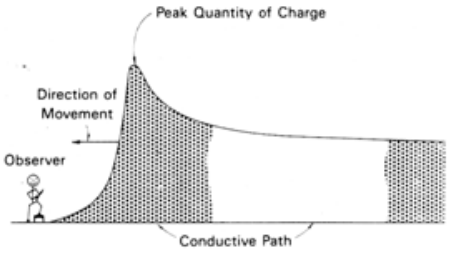

FIGURE 4
LIGHTNING WAVE CHARGE MOVEMENT

shapes of the first and subsequent strokes obtained from actual measurements made by researchers at Mount San Salvatore, Switzerland. The voltage stress created on equipment because of two different wave shapes is different for each wave. In multiple stroke lightning strikes, there are times when the first stroke creates the greatest voltage stress on electrical equipment, and there are times when the subsequent strokes create the greatest voltage stress.

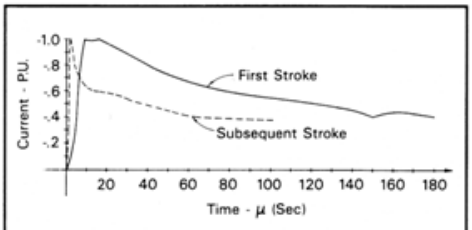

Adapted from: *Transmission Line Reference Book, 345 kV and Above,* Second Edition, Electric Power Research Institute, Palo Alto, California 1982.

FIGURE 5
TYPICAL WAVESHAPE FOR FIRST AND SUBSEQUENT STROKES AT MOUNT SAN SALVATORE, SWITZERLAND

To compare equipment response to a lightning surge, it has been necessary for the electric power industry to develop a simple expression for a lightning wave, and develop a standard wave shape. In reality, it is the stroke's crest current and the rapidly rising frontal currents near crest that play the key role in determining the response of equipment to lightning surges. A realistic, but very simple approximation of a lightning current wave is a ramp current wave, as shown on Figure 6. The wave rises to crest in 1.2 microseconds, and then decays to 1/2 its crest value in 50 microseconds. The wave is referenced as a 1.2 by 50 microsecond wave.

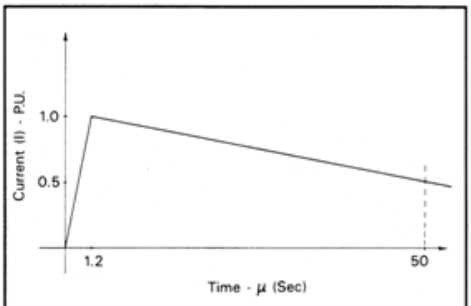

FIGURE 6
SIMPLIFIED INDUSTRY STANDARD LIGHTNING STROKE WAVESHAPE

The probabilities that a certain stroke front or rate of rise will occur are defined by Equations 3 and 4 from the 1982 *Transmission Line Reference Book.*

$$P(dI/dt) = \frac{1}{1 + \left(\frac{dI/dT}{24}\right)^4} \qquad \text{(Equation 3)}$$

where

P(dI/dt) = probability that a specified value of dI/dt will be exceeded, and

dI/dt = specified current rise time in kiloamperes per microsecond (kA/ms).

The probabilities that a certain peak current will occur in any stroke are defined by the following equation:

Copyright © 2013 IEEE. All rights reserved.

Copyright The Institute of Electrical and Electronics Engineers, Inc.
Provided by IHS under license with IEEE
No reproduction or networking permitted without license from IHS

Order Number: 02120914
Sold to:EGAT [700166108393] - VARRIS.Y@EGAT.CO.TH,
Not for Resale,2016-09-15 03:57:48 UTC

$$P(I) = \frac{1}{1 + \left(\frac{I}{31}\right)^{2.6}} \qquad \text{(Equation 4)}$$

where

P(I) = probability that the peak current in any stroke will exceed I, and

I = specified crest current in kiloamperes (kA).

Figure 7 is a plot of Equation 4 and Figure 8 is a plot of the probability that a stroke will be within the ranges shown on the abscissa.

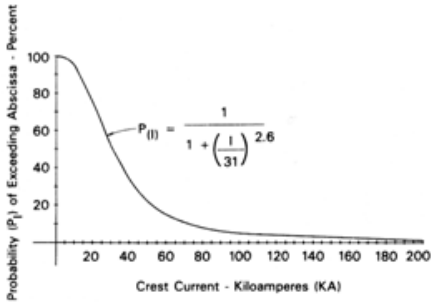

FIGURE 7
PROBABILITY OF STROKE CURRENT EXCEEDING ABSCISSA

ISOKERAUNIC LEVEL

Isokeraunic level is the average number of days per year on which thunder will be heard during a 24-hour period. If thunder is heard more than one time on any one day, the day is still classified as one thunder—day. The US Weather Bureau now keeps hourly weather records, and data will be available ultimately on a thunderstorm-hour basis.

The average annual isokeraunic level for locations in the United States can be determined by referring to isokeraunic maps, on which lines of constant keraunic level are plotted similar to the altitude contour lines on a topographic map. Figure 9 is such a map of the United States showing the average annual thunderstorm activity across the USA.

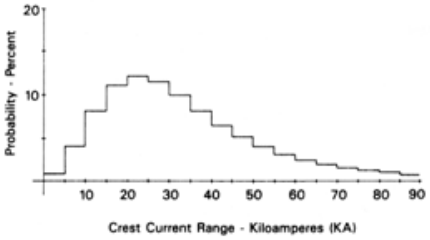

FIGURE 8
STROKE CURRRENT RANGE PROBABILITY

GROUND FLASH DENSITY

Ground flash density (GFD) is the average number of strokes per unit area per year at any location of interest. It is usually assumed that the GFD to earth, a substation, or a transmission or distribution line is roughly proportional to the isokeraunic level at the locality. Table 1 lists equations for GFD developed by various researchers at different locations around the world. Most researchers have arrived at a proportional relationship ranging from 0.1 T to 0.19 T ground flashes per square kilometer per year, where T is the average annual isokeraunic level. For design of electric power facilities, the following equations, again from the 1982 *Transmission Line Reference Book,* are suggested:

$$N = 0.12\,T \qquad \text{(Equation 5)}$$

or

$$N_m = 0.31T \qquad \text{(Equation 6)}$$

where

N = number of flashes to earth per square kilometer per year,

N_m = number of flashes to earth per square mile per year, and

T = average annual isokeraunic level.

Copyright © 2013 IEEE. All rights reserved.

Copyright The Institute of Electrical and Electronics Engineers, Inc.
Provided by IHS under license with IEEE
No reproduction or networking permitted without license from IHS

Order Number: 02120914
Sold to:EGAT [700166108393] - VARRIS.Y@EGAT.CO.TH,
Not for Resale,2016-09-15 03:57:48 UTC



Source: *Transmission Line Reference Book, 345 kV and Above*, Second Edition, Electric Power Resource Institute, Palo Alto, California, 1982.

FIGURE 9
USA ANNUAL ISOKERAUNIC MAP

TABLE 1
EMPIRICAL RELATIONSHIPS BETWEEN LIGHTNING GROUND-FLASH DENSITY AND ANNUAL THUNDER-DAYS (T)

Location	Ground Flash Density $km^{-2}\ yr^{-1}$	Researcher
India	0.1T	Aiya (1968)
Rhodesia	0.14T	Anderson and Jenner (1954)
South Africa	$0.023T^{1.3}$	Anderson/Eriksson (1981)
Sweden	$0.004T^{2}$	Muller-Hillebrand (1964) (approx)
UK	aT^{b}	Stringfellow (1974) [$a=2.6\pm0.2\times10^{-3}$; $b=1.9\pm0.1$]
USA (North)	0.11T	Horn and Ramsey (1951)
USA (South)	0.17T	Horn and Ramsey (1951)
USA	0.1T	Anderson and others (1968)
USA	0.15T	Brown and Whitehead (1969)
USSR	$0.036T^{1.3}$	Kolokolov and Pavlova (1972)
World (temperate climate)	0.19T	Brooks (1950)
World (temperate climate)	0.15T	Golde (1966)
World (tropical climate)	0.13T	Brooks (1950)

Source: Anderson, J. G., et al., *Transmission Line Reference Book—345 kV and Above*, Palo Alto, California, Electric Power Research Institute, 1982.

BASIC INSULATION LEVEL (BIL)

Basic insulation level is a term used to define the ability of electrical equipment to withstand current and voltage surges. To understand the concept of BIL ratings, it is first necessary to analyze the phenomena of a traveling current wave on an electrical line and the voltage wave that results.

TRAVELING WAVE

Earlier this paper presented a discussion of the formation of a lightning current stroke which propagates toward earth. This lightning stroke strikes the first object within its strike distance (see Equation 1). When the object struck is a transmission or distribution line, the current wave propagates in two directions, as shown on Figure 10.

A line exhibits an impedance to the flow of lightning stroke current. This impedance is called "surge impedance." Typical values of surge impedance

Copyright © 2013 IEEE. All rights reserved.

Copyright The Institute of Electrical and Electronics Engineers, Inc.
Provided by IHS under license with IEEE
No reproduction or networking permitted without license from IHS

Order Number: 02120914
Sold to:EGAT [700166108393] - VARRIS.Y@EGAT.CO.TH,
Not for Resale,2016-09-15 03:57:48 UTC

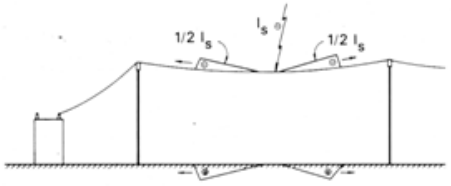

FIGURE 10
LIGHTNING STROKE TO POWER LINE

range from 50 ohms for underground lines to 500 ohms for a single overhead wire with ground return. Formulas to calculate surge impedance include many factors, such as conductor bundling, corona, and distances to other conductors and shield wires. Specific formulas for line surge impedances for various line types and configurations can be found in the references.

As a lightning current wave flows through a line, a voltage wave is developed. This voltage wave impresses a potential difference between the line and ground, which is calculated as follows:

$$E_S = 1/2\ I_S\ (Z_S) \qquad \text{(Equation 7)}$$

where

E_S = the voltage wave, kilovolts (kV),
I_S = the lightning surge current, kiloamperes (kA), and
Z_S = the line surge impedance, ohms.

The voltage wave travels along the electric power line at the velocity of light. If the flashover capability of an insulator is less than the magnitude of the surge voltage, the insulator will flashover. If the insulators are able to withstand the voltage stress without flashover, the surge voltage wave continues to travel the line, until it reaches the end of the line which may be an open switch, an open underground cable elbow, or a connection to a transformer. The surge impedance of a transformer is very large, and therefore a transformer appears as an open circuit to traveling surge waves. At the end of line, a surge wave has no place to go so it is reflected and travels back along the line. At the point of reflection, the voltage stress essentially doubles as the wave returns. If transformers or insulators located at these end-of-line locations are to remain undamaged, their insulation strength or BIL must be high enough to withstand this doubling of voltage wave.

Figure 11 depicts this situation in which a traveling voltage wave is reflected at an open point in the line. In Quadrant A of the figure, the voltage wave is shown traveling in the direction of the arrow just prior to reaching the open point. Quadrant B of the figure shows the leading edge of the wave reflected and the wave returning toward its original direction. The actual voltage wave being experienced is the sum of the forward moving and reflected wave shown by the solid black line. In Quadrant C of the figure, the peak of the wave is reflected and the voltage at the reflection point is twice the peak value of the original wave. This is the highest voltage stress situation. Quadrant D is a final depiction of the voltage wave with the major portion of the wave reflected. As before, the solid black line represents the actual wave at that point.

EQUIPMENT RATINGS

Formal equipment insulation testing was initiated during the 1930s by a Joint Committee on Insulation Coordination, composed of the American Institute of Electrical Engineers (AIEE), Edison Electric Institute (EEI), and the National Electrical Manufacturers Association (NEMA). Today's industry standard for specifying BIL for the different voltage classifications is the result of years of equipment insulation testing within the industry. The BIL reference voltage is defined as the highest surge voltage that the equipment insulation can withstand without failure or disruptive discharge. Equipment insulation is required to satisfy industry standardized tests to demonstrate an insulation level equal to or greater than the BIL specified for each voltage insulation class.

Copyright © 2013 IEEE. All rights reserved.

Copyright The Institute of Electrical and Electronics Engineers, Inc.
Provided by IHS under license with IEEE
No reproduction or networking permitted without license from IHS

Order Number: 02120914
Sold to:EGAT [700166108393] - VARRIS.Y@EGAT.CO.TH,
Not for Resale,2016-09-15 03:57:48 UTC

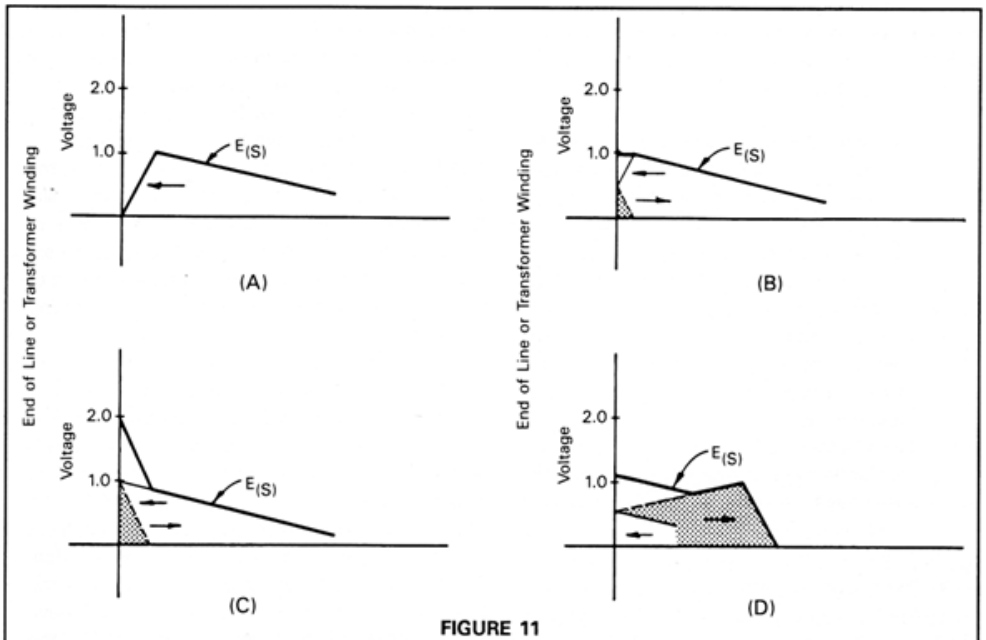

FIGURE 11
TRAVELING SURGE VOLTAGE WAVE

As impulse testing progressed over the years, a standard insulation testing procedure was developed. The ''standard'' full-wave lightning impulse waveform specified by the American National Standards Institute (ANSI) and the Institute of Electrical and Electronic Engineers (IEEE) to be used by equipment manufacturers for insulation testing would simulate traveling waves coming into the station over the transmission lines. The full-wave impulse waveform is defined as a waveform that rises to the crest voltage in 1.2 microseconds and drops to 50 percent of crest voltage in 50 microseconds, with both times measured from the same origin and in accordance with established standards of impulse testing techniques. A typical impulse wave shape is illustrated on Figure 12.

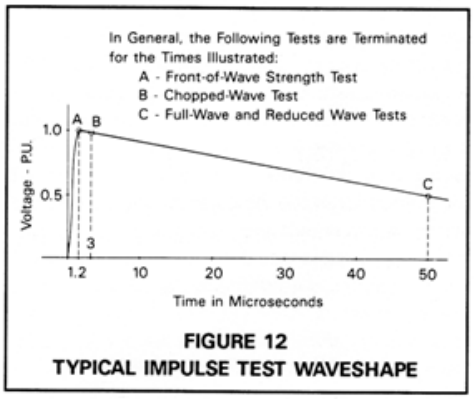

FIGURE 12
TYPICAL IMPULSE TEST WAVESHAPE

Copyright © 2013 IEEE. All rights reserved.

Copyright The Institute of Electrical and Electronics Engineers, Inc.
Provided by IHS under license with IEEE
No reproduction or networking permitted without license from IHS

Order Number: 02120914
Sold to:EGAT [700166108393] - VARRIS.Y@EGAT.CO.TH,
Not for Resale,2016-09-15 03:57:48 UTC

As the practice of insulation testing has progressed, the following variations of the standard lightning impulse test have evolved:

- Reduced Full-Wave Test—The reduced full wave normally has a crest voltage between 50 and 70 percent of the full-wave voltage.
- Chopped-Wave Test—The voltage impulse test is terminated after the maximum crest of the impulse wave form with a specified minimum crest voltage. This test demonstrates insulation strength against a wave traveling along the transmission line after flashing over an insulator some distance away.
- Front-of-Wave Test—The voltage impulse test is terminated during the rising front of the voltage wave with a specified minimum crest voltage.

A complete set of lightning impulse tests for power and distribution transformers would include the following sequence of impulse waves:

1. One reduced full-wave test.
2. Two front-of-wave tests.
3. Two chopped-wave tests.
4. One full-wave test.

Table 2 identifies the relationship between standard system voltages and the corresponding typical BILs. A natural question is "At what impulse current or voltage level should a lightning stroke be considered damaging or dangerous?" The capabilities of electrical equipment and lines to withstand direct lightning strokes are indicated by the BILs of the particular equipment and components. Stroke currents and voltages less than the protective insulation level are permitted to flow past lines or equipment. System insulation coordination considers the insulation of lines, as well as the connected equipment insulation. The electrical equipment may have a lower BIL rating, so it would need surge arrester protection even though the line design could be considered to have essentially complete protection from lightning.

The BIL of a piece of equipment dictates the stroke current limits of that equipment. The relationship between BIL and a prospective lightning stroke current is represented mathematically as follows:

$$I_S = \frac{2.0\ (BIL)}{Z_S} \qquad \text{(Equation 8)}$$

where

I_S = prospective stroke current, kA,
BIL = basic lightning impulse insulation level of equipment to be protected, kV, and
Z_S = the surge impedance of a conductor which averages 300 ohms for a vertical wire remote from earth. [Selecting a Z_S of 400 ohms (suitable for a phase conductor in the vicinity of a ground wire) would decrease the current values by 33 percent.]

Taking Z_S as 300 ohms yields the following values of stroke currents that correspond to typical classes of BIL shown in Table 3.

TABLE 3
STROKE CURRENT MAGNITUDE FOR VARIOUS CLASSES OF BIL

BIL Class	Stroke Current Magnitude I_S
kV	kA
110	0.73
150	1.00
200	1.33
250	1.67
350	2.33
550	3.67
650	4.33
750	5.00
900	6.00
1,050	7.00
1,300	8.67
1,400	9.33

CLASSICAL DIRECT STROKE PROTECTION

It is standard practice to attempt to shield substations and switchyards from direct lightning strokes.

Copyright © 2013 IEEE. All rights reserved.

Copyright The Institute of Electrical and Electronics Engineers, Inc.
Provided by IHS under license with IEEE
No reproduction or networking permitted without license from IHS

Order Number: 02120914
Sold to:EGAT [700166108393] - VARRIS.Y@EGAT.CO.TH,
Not for Resale,2016-09-15 03:57:48 UTC

TABLE 2
RELATIONSHIPS OF NOMINAL SYSTEM VOLTAGE TO MAXIMUM SYSTEM VOLTAGE AND BASIC LIGHTNING IMPULSE INSULATION LEVELS (BILs) FOR SYSTEM 1,100 kV AND BELOW

Application	Nominal System Voltage kV rms	Maximum System Voltage* kV rms	Basic Lightning Impulse Insulation Levels in Common Use kV crest
Distribution	1.2		30
	2.5		45
	5.0		60
	8.7		75
	15.0		95
	25.0		150, 125
	34.5		200, 150, 125
	46.0	48.3	250, 200
	69.0	72.5	350, 250
Power	1.2		45, 30
	2.5		60, 45
	5.0		75, 60
	8.7		95, 75
	15.0		110, 95
	25.0		150
	34.5		200
	46.0	48.3	250, 200
	69.0	72.5	350, 250
	115.0	121.0	550, 450, 350
	138.0	145.0	650, 550, 450
	161.0	169.0	750, 650, 550
	230.0	242.0	1,050, 900, 825, 750, 650
	345.0	362.0	1,175, 1,050, 900, 825
	500.0	550.0	1,675, 1,550, 1,425, 1,300
	765.0	800.0	2,050, 1,925, 1,800
	1,100.0	1,200.0	2,425, 2,300, 2,175, 2,050

*From ANSI C84.1-1977 and ANSI C92.2-1978

The method of shielding used has typically consisted of installing grounded shield wires over equipment, shielding masts near equipment, or a combination of the two. From studies performed by several electrical equipment manufacturers about 50 years ago, it was established that a grounded conductor or shielding structure casts or projects an electrical ''shadow'' on the ground plane below it. Based on studies performed by Westinghouse using scale models, a relationship was developed for various heights of the shielding structures above protected objects as a function of the horizontal separation and height of the protected objects. This method of shielding protection is commonly referred to as the ''Wagner Method'' and has been used by substation engineers for many years.

Similarly, other methods of shielding protection have been based on the use of shield electrodes which provided a linear-sided circular cone of protection with specific angles of the cone based on empirical data. Some 200 years ago, Benjamin Franklin observed that a 58-degree cone from a vertical air terminal would provide suitable shielding protection. The specific angle to be used in this method has decreased over the years to the generally accepted ''30-degree angle of protection.'' The decrease in angle or zone of protection

Copyright © 2013 IEEE. All rights reserved.
Copyright The Institute of Electrical and Electronics Engineers, Inc.
Provided by IHS under license with IEEE
No reproduction or networking permitted without license from IHS
Order Number: 02120914
Sold to:EGAT [700166108393] - VARRIS.Y@EGAT.CO.TH,
Not for Resale,2016-09-15 03:57:48 UTC

may be a result of recognizing the failure of earlier criteria, according to Ralph H. Lee in the IEEE *Transactions on Industrial Applications*.

Both the Wagner Method and the Cone Method have notable disadvantages. Neither accurately predicts shielding provided by shielding structures over 90 feet high, nor account for other nearby grounded and insulated conductors. As an example, the Empire State Building receives on the average 23 direct lightning strokes per year. The 30-degree angle linear cone would indicate that all lower structures within the 30-degree angle of protection are shielded by the taller building. What the method does not explain is why the lower structures well within the zone of protection have sustained direct strokes or why these tall structures also receive direct strokes below their tops (side strokes). Lee also states in another source that it is such reports which have reduced the credibility of the lightning protection capability of higher objects in terms of the linear cone principle.

ELECTROGEOMETRICAL MODEL

Shielding systems developed using classical methods of determining the necessary shielding for direct stroke protection of substations have historically provided a fair degree of protection. However, designers were somewhat at a loss when asked to quantify their designs. They could not answer such questions as "What is the probability of failure of the designed shielding system?" or "How many years should the substation statistically operate before a shielding failure occurs?" or "Is the system overdesigned? underdesigned?" As transmission voltages increased to the 345 kV levels and above, and as transmission structure heights increased accordingly, transmission line designers became increasingly aware of two important facts:

- Classical shielding angles which had previously been used in the design of lower voltage transmission lines, and consequently lower height structures, would not provide the stroke protection expected for the higher voltage lines.
- The impact of an EHV transmission line tripout because of lightning was very severe. The severity was measured both in cost and in unacceptable system performance without the transmission line.

These problems prompted new investigations and studies into the nature of a lightning stroke, and into ways of modeling a transmission line so that the designer could quantify the expected performance of the design. One extremely significant research project was Edison Electric Institute (EEI) Research Project RP 50, publication 72-900, published February 16, 1971. Performed by E. R. Whitehead, the project included a theoretical model of a transmission system subject to direct strokes, development of analytical expressions of performance of the line, and supporting field data which verified the theoretical model and analyses. The model of the system is referred to as the electrogeometrical model.

Recently, the electrogeometrical model has been carried a step further and applied to the protection of building structures and electric substations. Much of the conceptual work in this area has been performed by Ralph H. Lee, who has developed the "rolling sphere" technique, a simplified technique of applying the electrogeometric theory to buildings and electric substations.

PROTECTION AGAINST STROKE CURRENT I_S

The electrogeometrical model capitalizes on the fact that electric power equipment, because of its BIL rating, is designed to adequately handle some lightning surge current. This magnitude of stroke current, Is, can be calculated using Equation 8 or Table 2. The stroke distance for a stroke current I_S can be determined from Equation 1 or Figure 3.

Figures 13 and 14 show the geometrical model of a substation shield mast, the ground plane, the strike distance, and the zone of protection. The figures also show a line parallel to, and a distance S above, the ground plane. It also shows an arc of radius S which touches the mast and has its center on the line a distance S above the ground plane. This arc describes the points at which the shield

Copyright © 2013 IEEE. All rights reserved.
Copyright The Institute of Electrical and Electronics Engineers, Inc.
Provided by IHS under license with IEEE
No reproduction or networking permitted without license from IHS
Order Number: 02120914
Sold to:EGAT [700166108393] - VARRIS.Y@EGAT.CO.TH,
Not for Resale,2016-09-15 03:57:48 UTC

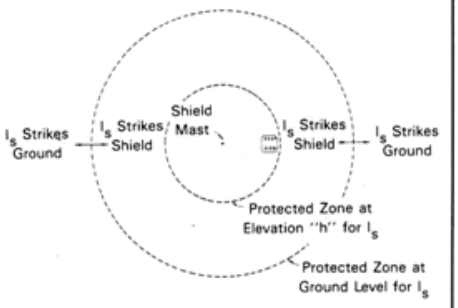

FIGURE 13
SHIELD MAST PROTECTION FOR STROKE CURRENT I_S (PLAN VIEW)

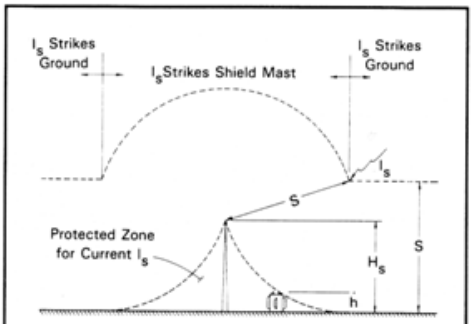

FIGURE 14
SHIELD MAST PROTECTION FOR STROKE CURRENT I_S (ELEVATION VIEW)

mast provides protection against the stroke current I_S. The zone below the arc is the protected zone for stroke current I_S. Step leaders which result in stroke current I_S and which descend outside the point where the arc is tangent to the ground will strike the ground by virtue of the stroke distance S. Step leaders which result in stroke current I_S and which descend inside the point where the arc is tangent to the ground will strike the shield mast, provided all other objects are within the protected zone.

The greatest height of shield mast which will provide protection for stroke currents equal to I_S is S. Increasing the shield height from H_S to the maximum height provides only a small increase in the zone of protection. The protection zone can be visualized as the surface of a sphere with radius S which is rolled toward the mast until touching the mast. As the sphere is rolled around the mast, it defines a three-dimensional surface of protection. It is this concept which has led to the name "rolling sphere" for simplified applications of the electrogeometrical model. This concept is discussed further in the last section of this paper.

PROTECTION AGAINST STROKE CURRENTS GREATER THAN I_S

The previous section of this paper demonstrated the protection provided for a stroke current I_S. A lightning stroke current, however, has an infinite number of possible magnitudes. Thus, will the system provide protection at other levels of stroke current magnitude? Consider a stroke current I_{S1} with magnitude greater than I_S. Strike distance, determined from Equation 1, is S_1. The geometrical model for this condition is shown on Figure 15. The figure shows both arcs of protection for stroke current I_{S1} and for the previously discussed I_S. The figure shows that the zone of protection provided by the mast for stroke current I_{S1} is GREATER than the zone of protection provided by the mast for stroke current I_S. Step leaders which result in stroke current I_{S1} and which descend outside the point where the arc is tangent to the ground will strike the ground. Step leaders which result in stroke current I_{S1} and which descend inside the point where the arc is tangent to the ground will strike the shield mast, provided all other objects are within the S_1 protected zone. Again, the protective zone can be visualized as the surface of a sphere touching the mast. In this case, the sphere has a radius S_1.

PROTECTION AGAINST STROKE CURRENTS LESS THAN I_S

It has been shown that a shielding system which provides protection at the stroke current level I_S provides even better protection for larger stroke currents. A question which arises now is "Will stroke currents less than I_S penetrate the shield system and strike equipment?" To answer this question, consider a stroke current I_{SO} with magnitude less

Copyright © 2013 IEEE. All rights reserved.

Copyright The Institute of Electrical and Electronics Engineers, Inc.
Provided by IHS under license with IEEE
No reproduction or networking permitted without license from IHS

Order Number: 02120914
Sold to:EGAT [700166108393] - VARRIS.Y@EGAT.CO.TH,
Not for Resale,2016-09-15 03:57:48 UTC

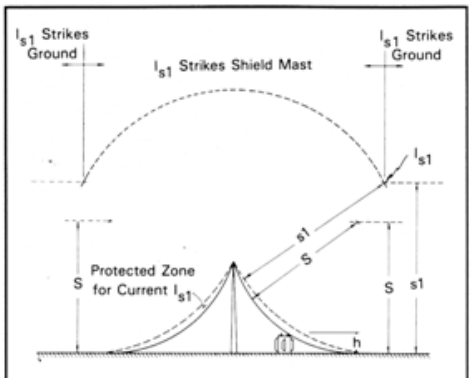

FIGURE 15
SHIELD PROTECTION MAST PROTECTION FOR STROKE CURRENT I_{s1} (ELEVATION VIEW)

than I_S. Strike distance, determined from Equation 1, is S_O. Figures 16 and 17 show the geometrical model for this condition and shows arcs of protection for both stroke current I_{SO} and for I_S. The figure shows that the zone of protection provided by the mast for stroke current I_{SO} is less than the zone of protection provided by the mast for stroke current I_S. A portion of the equipment protrudes above the dashed arc or zone of protection for stroke current I_{SO}. Step leaders which result in stroke current I_{SO} and which descend outside of the point where the arc is tangent to the ground will strike the ground. However, some step leaders which result in stroke current I_{SO} and which descend inside the point where the arc is tangent to the ground could strike the equipment. This is best shown in the plan view of protective zones shown on Figure 16. Step leaders for stroke current I_{SO} which descend inside the indicated protective zone for equipment which is ''h'' in height will strike the mast. Step leaders for stroke current I_{SO} which descend inside the cross-hatched area will strike equipment which is ''h'' in height in the area. If, however, the value of I_S was selected based on the BIL level of equipment used in the substation, stroke current I_{SO} should cause no damage to equipment.

FAILURE PROBABILITY

For the three conditions described previously in this paper, there should theoretically be no equipment failures resulting from direct strokes. This is because only those strokes which could produce a surge voltage wave less than the BIL of the equipment were able to penetrate the shielding system and these strokes should, therefore, cause no problem. Unfortunately, substation shielding which would provide such ideal protection is not always economically practical. This is especially true with substation equipment BIL levels below 550 kV, which is always the case with distribution substations. The designer is then faced with the problem of first determining the level of failure risk he is willing to base the design on, then developing a design which will meet this criteria. The following information further discusses the unprotected area of a design, and application of calculations to determine expected failure rates.

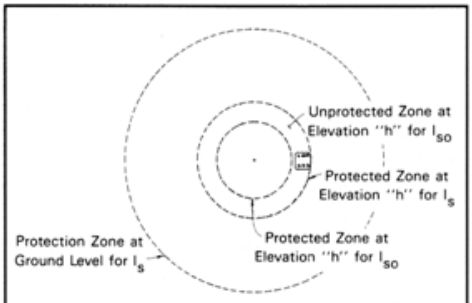

FIGURE 16
SHIELD MAST PROTECTION FOR STROKE CURRENT I_{SO} (PLAN VIEW)

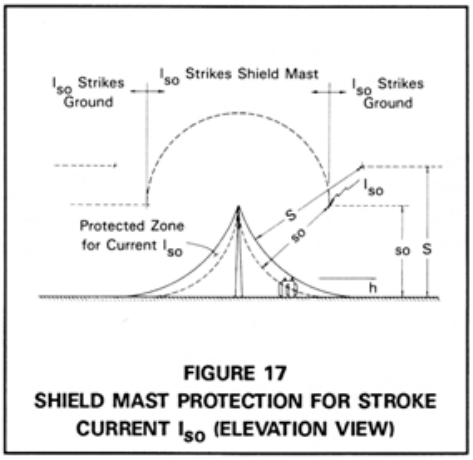

FIGURE 17
SHIELD MAST PROTECTION FOR STROKE CURRENT I_{SO} (ELEVATION VIEW)

Copyright © 2013 IEEE. All rights reserved.

Copyright The Institute of Electrical and Electronics Engineers, Inc.
Provided by IHS under license with IEEE
No reproduction or networking permitted without license from IHS

Order Number: 02120914
Sold to:EGAT [700166108393] - VARRIS.Y@EGAT.CO.TH,
Not for Resale,2016-09-15 03:57:48 UTC

UNPROTECTED AREA

Figure 16 can be used to visualize an unprotected area, assuming that equipment is sized and located as shown, and that, based on equipment BIL levels, equipment can withstand stroke currents less than I_{SO}. The associated strike distance is S_O. Based on the layout, the shield mast will provide protection for all stroke currents greater than I_S. However, those stroke current magnitudes between I_{SO} and I_S could reach equipment and would be expected to cause damage. The unprotected area for this condition would be the cross-hatched area shown on Figure 16.

PROBABILITY OF STROKES CAUSING EQUIPMENT DAMAGE

Equation 4 of Figure 7 can be used to determine the probability that any stroke will be greater than I_S, which is the level above which the shield masts will intercept the stroke. This probability is $P(I_S)$. The same equation and/or figure can be used to determine the probability that the stroke will be greater than I_{SO}, where I_{SO} is the level of stroke current which can be handled by the equipment based on its BIL. This probability is $P(I_{SO})$. Probability that a stroke is less than I_S, is 1.0 minus $P(I_S)$ or $P(< I_S)$. Probability that a stroke is less than I_{SO} is 1.0 minus $P(I_{SO})$ or $P(< I_{SO})$. For all lightning strokes which descend upon the cross-hatched area of Figure 16, the probability that equipment damage will occur is $P(< I_S) - P(< I_{SO})$.

These probabilities can best be demonstrated by the following example:

- Assuming the equipment BIL is 550 kV, the allowable stroke current is 3.67 kA, (Table 3)
- Assuming the strike distance S, above which protection is provided, is 60 meters, the stroke current above which protection is provided is 15.88 KA. (Equation 2)
- Using Equation 4 or Figure 7, the probability that a stroke will exceed 3.67 kA is 0.996.
- Using Equation 4 or Figure 7, the probability that a stroke will be less than 3.67 kA is 1.0−0.996 = 0.004.
- Using Equation 4 or Figure 7, the probability that a stroke will exceed 15.88 kA is 0.851.
- Using Equation 4 or Figure 7, the probability that a stroke will be less than 15.88 kA is 1.0−0.851 = 0.149.
- Resulting in the probability that a stroke which descends upon the unprotected area will cause equipment damage and failure is 0.149−0.004 = 0.145 or 14.5 percent.

FAILURE RATE

The substation designer is basically concerned with the rate of failure of the shielding design, or the number of years expected between failures. In the previous section of this paper, the methodology was presented for determining the probability that a stroke in the unprotected area would cause failure. By knowing the number of strokes expected to descend upon the area, the failure rate can be easily determined.

The number of strokes expected in the general area of the substation is the ground flash density (GFD). GFD is calculated using Equation 5. The number of strokes expected to descend upon the area is then the GFD times the unprotected area. Finally, the annual failure rate is the product of the number of strokes to the area times the probability that the stroke in the area will cause failure.

The calculation of failure rate can best be demonstrated by continuing the example begun in the previous section.

- Assuming the outside radius of the unprotected area is 35 meters and that the inside radius of the unprotected area is 22 meters, the unprotected area is $\pi [(35^2 - 22^2)] = 2{,}328$ square meters or 2.328×10^{-3} square kilometers.
- Assuming the isokeraunic level is 50 TSD (values across the USA can be read from Figure 9), the GFD (Equation 5) is 6.0 strokes per square kilometer.
- The annual number of strokes expected to descend into the unprotected area is $6.0 \times 2.328 \times 10^{-3} = 0.01397$ strokes/year.
- Using the 0.145 probability developed in the previous section, the annual expected number of equipment failures due to direct lightning strokes is $0.01397 \times 0.145 = 0.00203$ failures/year or 494 years per failure.

Copyright © 2013 IEEE. All rights reserved.

Copyright The Institute of Electrical and Electronics Engineers, Inc.
Provided by IHS under license with IEEE
No reproduction or networking permitted without license from IHS

Order Number: 02120914
Sold to:EGAT [700166108393] - VARRIS.Y@EGAT.CO.TH,
Not for Resale,2016-09-15 03:57:48 UTC

The above calculated failure rate would be for the simplified single mast substation described in the example. If a utility had 20 such substations of identical design scattered throughout its system, the total system substation failure rate due to direct strokes would be 494 ÷ E 20 = 24.7 years per failure.

Typically, substation designers consider a total system failure rate in this order of magnitude as acceptable.

MULTIPLE SHIELDING ELECTRODES

The electrogeometric modeling concept of direct stroke protection has been demonstrated for a single shield mast. The concept can be applied to one, or a group, of horizontal shield wires, as well as multiple shield masts. Figure 18 shows this application considering two masts in a multiple

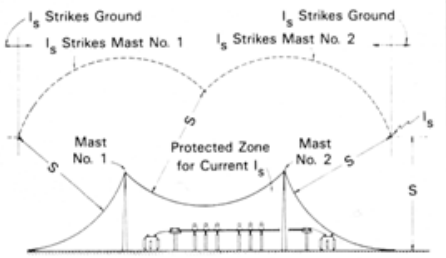

FIGURE 18
MULTIPLE SHIELD MAST PROTECTION FOR STROKE CURRENT I_S

shield mast system. The arc of protection for stroke current I_S is shown for each mast. The dashed arcs represent those points at which a descending step leader for stroke current I_S will be attracted to either Mast No. 1 or Mast No. 2. The protected zone between the masts is defined by an arc of radius S with the center at the intersection of the two dashed arcs. The protective zone can again be visualized as the surface of a sphere with radius S which is rolled toward a mast until touching the mast, then rolled up and over the mast such that it would be supported by the two masts. The dashed lines would be the locus of the center of the sphere as it is rolled across the substation surface. Using the concept of a rolling sphere of the proper radius, the protected area of an entire substation can be determined. This can be applied to any group of different height shield masts, shield wires, or combination of the two.

CONCLUSION

This paper has assimilated technical information from several sources to develop an analytical method for design of direct stroke protection of substation equipment. Using the information provided in this paper, a designer can "quantity" the statistical failure rates of various designs, and can make design and economic decisions based on this information. The information shown in this paper will, to a degree, be incorporated into the new IEEE design guide for direct stroke protection of substations.

BIBLIOGRAPHY

Anderson, J. G., et al., *Transmission Line Reference Book—345 kV and Above,* Palo Alto, California, Electric Power Research Institute, 1982.

Anderson, J. G., et al., *Transmission Line Reference Book—345 kV and Above*, Palo Alto, California, Electric Power Research Institute, 1975.

Cianos, N., and E. T. Pierce, "A Ground-Lightning Environment for Engineering Usage," Stanford Research Institute, Technical Report 1, August 1972.

Fink, D. B., and H. W. Beaty, *Standard Handbook for Electrical Engineers*, Eleventh Ed., New York, McGraw-Hill, 1978.

"General Requirements for Liquid-immersed Distribution, Power, and Regulating Transformers," American National Standards Institute, ANSI/IEEE C57.12, New York, 1980.

Copyright © 2013 IEEE. All rights reserved.

Copyright The Institute of Electrical and Electronics Engineers, Inc.
Provided by IHS under license with IEEE
No reproduction or networking permitted without license from IHS

Order Number: 02120914
Sold to:EGAT [700166108393] - VARRIS.Y@EGAT.CO.TH,
Not for Resale,2016-09-15 03:57:48 UTC

Gilman, D. W., and E. R. Whitehead, "The Mechanism of Lightning Flashover on High Voltage and Extra-High Voltage Transmission Lines," *Electra*, No. 27, March 1973, pp. 65-96.

"IEEE Standard for Surge Arresters for AC Power Circuits," American National Standards Institute, ANSI/IEEE C62.1, New York, 1981.

Lee, R. H., "Lightning Protection of Buildings," *IEEE Transactions on Industrial Applications*, Vol. 1A-15, No. 3, May/June 1979, pp. 236—240.

Lee, R. H., "Protection Zone for Buildings Against Lightning Strokes Using Transmission Line Protection Practice," IEEE Industrial & Commercial Power Systems Conference, May 1977.

Lee, R. H., "Protect Your Plant Against Lightning," *Instruments and Control Systems*, February 1982, pp. 31-34.

Linck, H., "Shielding of Modern Substations Against Direct Lightning Strokes," *IEEE Transactions*, Vol. PAS-94, No. 5, September/October 1975, pp. 1674-1679.

"Power Systems—Insulation Coordination," American National Standards Institute, ANSI C92.1-1982, New York, 1982.

"Techniques for Dielectric Tests," American National Standards Institute, ANSI C68.1, New York, 1968.

Wagner, C. F., et al., *Electrical Transmission and Distribution Reference Book*, Fourth Ed., Westinghouse Electric Corp., 1964.

Wagner, C. F., G. D. McCann, and C. M. Lear, "Shielding of Substations," *AIEE Transactions*, Vol. 61, February 1942, pp. 96-99.

Whitehead, E. R., "Mechanism of Lightning Flashover," EEI Research Project RP 50, Pub. 72-900, Illinois Institute of Technology, February 1971.

ACKNOWLEDGEMENT

The technical content in this paper has resulted from research of numerous literature resources on the subject of lightning and lighting protection. The significant articles and texts used to develop this paper are listed in the bibliography of this paper. The author of this paper would like to acknowledge the research and work performed by those individuals responsible for the literature in the bibiliography.

The author also acknowledges his follow members of the IEEE Transmission Substation Working Group E-5. This working group is presently developing a new guide for direct stroke protection of substations. Much of the work presented in this paper is currently being adapted for use in the new guide.

Copyright © 2013 IEEE. All rights reserved.

Copyright The Institute of Electrical and Electronics Engineers, Inc.
Provided by IHS under license with IEEE
No reproduction or networking permitted without license from IHS

Order Number: 02120914
Sold to:EGAT [700166108393] - VARRIS.Y@EGAT.CO.TH,
Not for Resale,2016-09-15 03:57:48 UTC

Annex H

(informative)

Methodology review

H.1 Introduction

The following methods were reviewed:

a) Beccera and Cooray, simplifed leader inception method [B12][B13]

b) D'Alessandro, collection volume method/field intensification factors [B41][B42]

c) Eriksson, improved electrogeometric method [B46] and [B50]

Due to time constraints, some methods were not reviewed. These methods might have merit. Methods not reviewed:

— Moore, Aulich, and Rison, research on electrode shape [B97][B98][B99]

— Attractive radius presented by Rizk [B127][B128]

— Petrov and Waters [B121]

— Whitehead and the gap method (Whitehead's discussion [B46])

NOTE—The selection for review, or not to review, has no implication of relative merit.

Review has focused on engineering analysis methods that allow evaluation of a lightning protection design. Review has not included consideration of application for scientific investigation.

This review includes a qualitative description of the models that underlie the analytical methods. The qualitative commonality of all of the methods is described. The analytical methods appear to differ in the level of quantitative detail that is carried from the scientific model.

H.2 Qualitative description of the models

The models have the following characteristics:

a) A lightning stroke is the result of a downward progressing leader from a "cloud" with a negative charge and an upward progressing leader from a grounded object.

b) The tip of the downward leader progresses with an electron (−) charge. The electron charge in the downward progressing leader might increase as the downward leader lengthens. There are different theories about the physics of the charge magnitude and distribution throughout the downward leader.

c) The downward leader charge causes an electric field to exist between the downward leader and all grounded objects. The element vector of the electric field points from the grounded object to the downward leader. There are different theories about the importance of relative geometrical location of the downward leader tip and the grounded objects. The importance of relative location can lead to assumptions about the electric field between the downward leader and grounded objects,

Copyright © 2013 IEEE. All rights reserved.

Copyright The Institute of Electrical and Electronics Engineers, Inc.
Provided by IHS under license with IEEE
No reproduction or networking permitted without license from IHS

Order Number: 02120914
Sold to:EGAT [700166108393] - VARRIS.Y@EGAT.CO.TH,
Not for Resale,2016-09-15 03:57:48 UTC

e.g., one set of theories is that a lightning stroke will not form on a grounded structure that is higher than the surrounding earth, if the downward leader tip descends below the highest point of the higher grounded object.

d) The magnitude and configuration of the electric field is a function of

   1) the magnitude and distribution of the downward leader charge

   2) the geometry of the grounded object of interest

   3) the geometry and location of "competing" objects, e.g., other structures

e) At some point in the progression of the downward leader, the electric field at grounded objects will cause inception of upward leaders. There are different theories about the physics of the inception of the upward leader. The upward leader inception might occur at multiple locations on grounded objects, and at different points in time, as the downward leader progresses.

f) After inception of an upward leader, the tip of the upward leader will travel toward the moving downward leader tip with some velocity. And the downward leader tip continues progress with some velocity that is not necessarily the same velocity of the upward leader tip. There does not appear to be a much data to explain the magnitude or time/space dependence of the velocities of the upward and downward leader tip. Also, it is assumed that all upward leaders from grounded objects that are initiated from one downward leader will travel with the same velocity. This implies that the upward leader that is the first initiated, or the distance from the point of initiation, or both, could determine the point struck.

g) Progress of upward leaders from one or more grounded objects, and the progress of the downward leader tip, result in a time and space changing electric field magnitude and distribution.

h) At some point in time and geometry, the downward leader tip and the upward leader tip merge to form a lightning stroke.

i) There is a relationship between the total charge in the downward leader and the magnitude of the first return stroke current. Since there are different theories about the charge distribution in the downward leader, a given stroke magnitude can result in different scenarios leading to the stroke incident.

H.3 Engineering analysis methods

Several engineering analysis methods are based on this qualitative model. The methods differ in the number and type of approximations that are made in developing a model for analysis of a particular case. Model approximations might be necessary because

a) There is limited theory, laboratory test data, field test data, or historical observation

b) There is a cost and a skill level required to manipulate the tools that are used in analysis

c) There might be a limited time duration that is practical for a particular case

The detail of the quantitative model that is used in the analysis is a result of the approximations. The level of detail has ramifications in the hours of effort required to construct the model for a particular case. The level of detail can dictate the range of analytical tools, e.g., finite element analysis software that could be used. The tools have ramifications in the cost of the analysis as well as the ability to perform an analysis. Assumptions are used in the development of the three methods that have been reviewed.

Copyright © 2013 IEEE. All rights reserved.

Copyright The Institute of Electrical and Electronics Engineers, Inc.
Provided by IHS under license with IEEE
No reproduction or networking permitted without license from IHS

Order Number: 02120914
Sold to:EGAT [700166108393] - VARRIS.Y@EGAT.CO.TH,
Not for Resale,2016-09-15 03:57:48 UTC

H.4 Assumptions

Assumptions are made with all of the models that were reviewed. Some are implicit in the overall assumptions of the less detailed models. Some are explicitly stated in the more detailed models. The following is a list of some of the assumptions:

a) Downward leader charge can be determined from the magnitude of the first return stroke.

b) All of the study objects, i.e., structures of interest, below the downward leader have equal potential and they are grounded.

c) The electric field magnitude and configuration throughout space is not affected by differential micro and macro atmospheric conditions, e.g., rain, wind.

The description of the alternative methods includes the following items:

a) General statement of level of detail

b) Qualitative description of the method modeling of the downward leader

c) Qualitative description of the method modeling of the upward leader formation and progress

d) What are the assumptions, why are they made, and justification for making them

e) How is the method applied

f) What are the tools for analysis

g) Level of skill and relative time to model a case, and analyze a design

H.5 Description of the methods

H.5.1 Simplified physical model of upward connecting leader inception (SLI)

The SLI approach (Becerra and Cooray [B12], Becerra Cooray, and Roman [B13]) appears to be based on detailed quantitative models of the physics of the inception of the upward leader. The detailed analyses leads to a simplified approximation that uses a K factor the can be used to generate a striking distance. The SLI method requires the detailed charge simulation method (CSM) of analysis of geometric characteristics of the study object.

The downward leader is modeled as a negative charge e.g., 1 coulomb, with a distribution throughout the downward leader that is based on an analysis of the Berger data, and results in a more detailed charge distribution and therefore a more detailed electric field due to the downward leader. The downward leader charge and position of the tip changes with time while extending vertically downward. The downward leader causes an accumulation of positive charge on the ground plane below the downward leader.

The electric field due to the charge in the downward leader, and the resultant charge at the grounded object, cause a corona zone to form at the grounded object. Depending on the shape (curvature) of the grounded electrode, the corona might extinguish, but corona will be re-established. With increasing energy content of the corona zone, the temperature of the air will increase. If air temperature reaches a value of 1500 K, there will be streamer emissions. If the streamer emissions reach a certain upward length, an upward leader will form and advance to join with the downward leader.

Copyright © 2013 IEEE. All rights reserved.

Copyright The Institute of Electrical and Electronics Engineers, Inc.
Provided by IHS under license with IEEE
No reproduction or networking permitted without license from IHS

Order Number: 02120914
Sold to:EGAT [700166108393] - VARRIS.Y@EGAT.CO.TH,
Not for Resale,2016-09-15 03:57:48 UTC

The assumptions include the following.

a) There is a known empirical relationship between the magnitude of the lightning stroke current and the charge in the downward leader.

b) The electric field caused by the charge in the downward leader is temporally constant, i.e., the charge does not increase as the downward leader lengthens. But the charge is *not* uniformly distributed. The charge distribution used in the detailed analysis is based on Cooray's evaluation of the Berger data [B13].

c) The geometry is fairly simple, i.e., rectangular objects, and the ground plane is horizontal with no projections.

d) The first corona zone formation on the study object is due to the downward leader charge and has a constant electric field across the zone.

e) The second corona zone formation (necessary for the start of an unstable upward leader) occurs when the space charge in the zone is 1 micro-coulomb.

f) The initial leader channel formed from the second corona zone is a symmetrical plasma cylinder.

g) The charge per unit length in the upward unstable leader is constant, and the length of advancement of the upward propagating leader is directly proportional to the total charge in front of the tip of the leader.

h) The total charge in the corona zone in front of the upward propagating tip is modeled (CSM) as discrete point charges, finite line charges, and uniform ring charges.

i) The volume of the corona zone charge is defined by a 60 degree angle from the axis of the corona zone and a zone length.

j) The objects to be studied are modeled into the uniform background field of the study space, with all surfaces of the structure to be analyzed, and all "competing features" at the same non-time–varying potential. The background electric field is the field required to initiate an upward leader for each type of object, e.g., structure corner.

k) The change in the total charge of the upward leader is a function of a geometrical factor (KQ) that is derived from a more detailed CSM analysis. The geometrical factor is a function of the geometry of the object of interest, e.g., structure corners, lightning rods.

l) The geometrical factor is approximately the same for various types of structures, and a single value can be used.

m) The downward leader approaches the study object in a vertical line above the study object.

The following steps are required to apply the method.

1) For a study object, using the assumptions, do a CSM parametric study to determine the relationship between a leader inception corona charge and the electric field due to the geometry of the study object. The relationship produces a factor KQ that can be used in a simplified method to determine the leader stabilization field.

2) With the factor KQ, use the simplified method to calculate the electric field magnitude and location relative to the study object that will produce a stable upward leader.

3) Select a stroke current magnitude from the probability distribution for stroke current, and convert the stroke current to a leader charge base.

4) For the leader charge, determine the electric field for the study space of the object(s) of interest, for the downward descending downward leader above the study object.

Copyright © 2013 IEEE. All rights reserved.
Copyright The Institute of Electrical and Electronics Engineers, Inc.
Provided by IHS under license with IEEE
No reproduction or networking permitted without license from IHS
Order Number: 02120914
Sold to:EGAT [700166108393] - VARRIS.Y@EGAT.CO.TH,
Not for Resale,2016-09-15 03:57:48 UTC

5) The striking distance is the distance from the downward leader to the study object, at which the electric field equals the stabilization field for an upward leader.

6) Based on the striking distances for various study objects, locate the objects and analyze the design as in the EGM.

The analysis tools are fairly simple for the final step, i.e., the same as those required in applying the EGM. However, it appears that some type of CSM modeling software is required, and fairly intensive computation system is required. For the second step, determining the stabilization field for a study object, it appears that engineering software is also required.

The level of skill and relative time to model a case and analyze a design for the final step appears to be the same as that required for the EGM. The first and second steps appear to require a high level of skill in modeling of potential distributions and a fair amount of time to build the models.

H.5.2 Collection volume method (CVM/FIF)

The CVM/FIF approach (D'Alessandro [B41], Dainwood and Kercel [B42]) appears to be based on detailed quantitative two-dimensionaland three-dimensional models of the physics of the formation of the lightning stroke. The detailed analysis leads to a simplified approximation that uses field intensity factors (FIF) that can be used with the Eriksson EGM. The FIF approximation requires the detailed electric field analysis of geometric characteristics of the study object, and parametric studies to interpolate and extrapolate to a wide range of structures.

The downward leader is modeled as a negative charge e.g., 1 coulomb, with a linear distribution throughout the downward leader. The downward leader charge and position of the tip changes with time as it grows vertically in length downward. The downward leader causes an accumulation of positive charge on the ground plane below the downward leader.

At each point of interest on a possible strike point on the objects, the formation of the upward leader is modeled as a critical radius of charge that increases with the d_i, according to Carrara and Thione [B28].

There is a positive charge buildup on all grounded objects below the downward leader. At some point, an upward leader is incepted when the field at the grounded object reaches ~ 3 MV/m over the critical radius, e.g., 28 cm, and magnitude approximately 3 MV/m, at one or more of the grounded objects. The upward leader(s) progress toward the downward leader tip. The downward leader continues to lengthen downward until the first upward leader reaches the downward leader. At that time all competing upward leaders are extinguished.

Assumptions include the following:

a) There is a known empirical relationship between the magnitude of the lightning stroke current and the charge in the downward leader given by Equation 1 in D'Alessandro and Gumley [B42].

b) The charge in the downward leader is temporally constant and is linearly distributed throughout the downward leader. The charge does not increase as the downward lengthens.

c) The geometry is fairly simple, i.e., rectangular objects, and the ground plane is horizontal with no projections.

d) The objects of the study, e.g., structures, are modeled to the extent that the features that are known, or suspected, points of upward leader formation, e.g., handrails, corners. All other features, e.g., sides of structures are simplified geometrical shapes. If competing features, e.g., nearby structures, are likely to alter the upward leader formation point, those objects are included with the same level of detail.

Copyright © 2013 IEEE. All rights reserved.

Copyright The Institute of Electrical and Electronics Engineers, Inc.
Provided by IHS under license with IEEE
No reproduction or networking permitted without license from IHS

Order Number: 02120914
Sold to:EGAT [700166108393] - VARRIS.Y@EGAT.CO.TH,
Not for Resale,2016-09-15 03:57:48 UTC

e) The objects to be studied are modeled into the uniform background field of the study space, with all surfaces of the structure to be analyzed, and all "competing features" at the same non-time–varying potential. The magnitude of the background electric field is "typical" of the field caused by various downward leaders heights and charges.

f) The electric field intensity at all points that results from the presence of the objects in the background field form a "base" for comparison of the effects of a downward charged leader.

g) The progress and effects of the downward leader are a function of the space only, and are not time, varying. The resultant electric field is a function of the space and object geometry.

h) Except for tall structures (>60 m), only points above the horizontal plane at the top of the object will result in an upward leader formation.

i) Upward leader initiation occurs when the curvature of an iso-electric field line reaches 38 cm, and the electric field strength at the iso-field line reaches 3 MV/m. The 38 cm can only be achieved with objects that have features that are "less sharp" than 38 cm, objects of larger radius must satisfy the field criterion over their physical radius after corona inception.

j) The imaginary line above the ground plane in which the electric field is sufficient (3 MV/m) to incept an upward leader (z_m) is much less than the striking distance (d_s). This implies that the downward leader tip is a long distance away from the tip of the structure when the electric field above the ground plane is sufficient for a upward leader inception.

k) The velocity of the downward leader tip is equal to the velocity of the upward leader tip (practical approximation given the available data for relative leader velocity).

l) Field intensification factor (FIF)—the ratio of this electric field at the surface of the object in the presence of the ambient thunderstorm field to the ambient field in the absence of the object—represents the field enhancement of the object geometry.

With the detailed modeling, a finite-element analysis is made for a number of space/structure geometries. The space/structure geometries include protective devices, e.g., masts. The analyses are used to determine FIF.

A library of FIFs is generated for common features that occur in objects—e.g., dead end tower, buses—that are likely "targets" for a lightning, and protective devices, e.g., lightning termination points.

With the library of FIFs, the following procedure is used in D'Alessandro and Gumley [B42].

a) Specify the structure height, width, and shape, and any structural features.

b) Identify the "most probable" competing features (outer, sharper features).

c) Select the number, location, and height of the air terminals (using a rough estimate of the attractive area of each).

d) Specify the basic physical parameters—site elevation or altitude above sea level—and apply the appropriate correction factor to the air breakdown field if applicable.

e) Select field intensification factors for all air terminals and competing features: leader velocity ratio, downward leader charge/prospective peak current/protection level, and cloud base height.

f) For all air terminals and nominated competing features, compute the: collection volume (striking distance surface and velocity-derived boundary), attractive radius from the intersection point of the striking distance surface (for the given leader charge/protection level), and the velocity boundary using the critical radius concept.

g) Apply the attractive radii or areas to their respective air terminals and competing features.

Copyright © 2013 IEEE. All rights reserved.

Copyright The Institute of Electrical and Electronics Engineers, Inc.
Provided by IHS under license with IEEE
No reproduction or networking permitted without license from IHS

Order Number: 02120914
Sold to:EGAT [700166108393] - VARRIS.Y@EGAT.CO.TH,
Not for Resale,2016-09-15 03:57:48 UTC

h) Check to see if the air terminal capture areas completely overlap the capture areas of all competing features (a plan view is useful here).

i) If there is not complete overlap, use more air terminals or relocate some of the existing air terminals and repeat the above steps until complete overlap is achieved.

The detailed modeling necessary to generate the FIFs employs finite element electromagnetic field analysis software. Although the tool is not specified, it appears that some software was used to develop the models to determine the FIFs. Once the FIFs were determined it appears that the analytical method required only a graphical analysis.

The finite element analysis software is a generalized tool that is not aimed at facilitating the modeling of structures, geometric placement of the downward leader, and identification of likely points of upward leader initiation. The modeling requires considerable sophistication in finite element modeling techniques and computation reduction.

H.5.3 Eriksson EGM [B46] [B50]

The level of detail is approximately the level given in the EGM. The significant difference is the additional detail of the structure height.

In the Eriksson paper, there is no description (qualitative or otherwise) of the downward leader. But the references to Golde indicate that the qualitative description is the same as the EGM and the linearly distributed downward leader charge model described earlier.

The upward leader formation is probably based on the work of Golde.

A lightning system design is analyzed in much the same manner as in the EGM with the attractive radius used in lieu of the striking distance.

Because the attractive radius explicitly includes a height factor, it appears that a 2D graphical analysis is all that is required for this method versus a three-dimensional analysis that is required for the EGM, as long as all heights are less than 60 m.

A plan view of the proposed lightning protection system and protected structures is required.

The skill level and time to model and analyze a case is approximately the same as the EGM.

Copyright © 2013 IEEE. All rights reserved.

Copyright The Institute of Electrical and Electronics Engineers, Inc.
Provided by IHS under license with IEEE
No reproduction or networking permitted without license from IHS

Order Number: 02120914
Sold to:EGAT [700166108393] - VARRIS.Y@EGAT.CO.TH,
Not for Resale,2016-09-15 03:57:48 UTC

Annex I

(informative)

Comparison of IEEE Std 998 to other standards

There are several standards that cover in various degrees lightning protection. A cursory review was completed with several of these standards with regard to the physical phenomena of lightning and the principles of lightning protection.

I.1 Comparison of IEEE Std 1243-1997 and IEEE Std 998

I.1.1 The scope of IEEE Std 1243-1997

The guide will show the transmission line designer which design choices improve or degrade lightning performance. The effects of line routing, structure type, insulation, shielding, and grounding are discussed in the guide. There is a section on special methods that can improve lightning performance. There is an annex that presents the FLASH program. The guide applies to transmission lines with system voltages exceeding 69 kV and is also relevant to HVDC overhead lines.

I.1.2 Observations

The main purpose of IEEE Std 1243™-1997 [B71] is to reduce flashovers to an acceptable failure rate rather than to provide a shield to the line. The guide focuses on other design components in addition to shielding, such as grounding, insulation levels, surge arrester application, line routing, etc.

The shielding discussions in IEEE Std 1243-1997 include the following types of shielding:

a) Shielding from nearby structures and trees.

b) Shield wires (OHGWs) installed above the transmission line.

c) Additional shield wires added to the same structure occupied by the line.

d) Additional shield wires added to a separate structure adjacent to the line.

I.1.3 Phenomena models and methods of IEEE Std 1243-1997

I.1.3.1 Models

There is no discussion in IEEE Std 1243-1997 [B71] of a model for the physical process of lightning initiation or travel.

IEEE Std 1243-1997 discusses ground flash density (GFD) based on historical information to calculate the likelihood that a transmission line will encounter a lightning-caused flashover. A method of estimating GFD from available keraunic level data is included in IEEE Std 1243-1997. The equation is different than the one presented in this standard.

The lightning travels through air to ground or a grounded object.

Copyright © 2013 IEEE. All rights reserved.

Copyright The Institute of Electrical and Electronics Engineers, Inc.
Provided by IHS under license with IEEE
No reproduction or networking permitted without license from IHS

Order Number: 02120914
Sold to:EGAT [700166108393] - VARRIS.Y@EGAT.CO.TH,
Not for Resale,2016-09-15 03:57:48 UTC

I.1.3.2 Shielding methods

IEEE Std 1243-1997 [B71] primarily addresses the use of the fixed angle and electrogeometric models. The fixed-angle method with shield wire for IEEE Std 1243-1997 includes:

a) Position one or more shield wires above the transmission line to intercept the lightning strike.

b) To help ensure that most lightning strokes terminate on the shield wire rather than on the phase conductors, a shielding angle is recommended to help provide adequate protection. An angle of 30 degrees had been used traditionally for voltages up to 230 kV. When EHV lines were introduced, the lightning performance of these lines was worse than had been anticipated.

c) The standard suggests that the shielding angle be decreased as the structure height increases. There is a figure in IEEE Std 1243-1997 that assists the designer in selecting the shielding angle based on average height of the shield wire, the minimum current required for flashover, and the ground flash density for a fixed shielding failure rate.

I.1.3.3 EGM

Striking distance is defined by an equation using 10 as a coefficient instead of 8 as used in this standard. In addition, no factor is included to account for strokes to shield wires versus shield masts as is done in IEEE Std 998.

IEEE Std 1243-1997 [B71] has two equations for determining striking distance to the ground plane; these equations differentiate for structures less than 40 meters and equal to or greater than 40 meters.

A flashover rate per unit time is determined based on the exposure width given graphically by using the equations referenced above.

I.2 Comparison of IEEE Std 1410-2004 and IEEE 998

I.2.1 The scope of IEEE Std 1410-2004

The guide will identify factors that contribute to lightning-caused faults on overhead distribution lines and suggest improvements to existing and new constructions. The guide is limited to the protection of distribution line insulation for system voltages 69 kV and below.

I.2.2 The purpose of IEEE Std 1410-2004

The purpose of this guide is to present options for reducing lightning-caused flashovers on overhead distribution lines.

I.2.3 Observations

One reason for reviewing the scope and purpose of these two guides is to identify why these two guides have differences. In IEEE Std 1410-2004 [B73] the limitation of 69 kV (typically 350 kV BIL or less) is probably one big reason the purpose is to reduce lightning-caused flashovers on OH distribution lines. IEEE Std 1410-2004 identifies other factors to consider in addition to providing shielding to minimize direct lightning strokes. Shielding is also important as direct lightning strikes to power distribution lines cause insulation flashover in the majority of cases due to the limited insulation levels of distribution lines. The IEEE Std 1410-2004 guide gives the example that even a lightning stroke of as little as 10 kA would

Copyright © 2013 IEEE. All rights reserved.
Copyright The Institute of Electrical and Electronics Engineers, Inc.
Provided by IHS under license with IEEE
No reproduction or networking permitted without license from IHS
Order Number: 02120914
Sold to:EGAT [700166108393] - VARRIS.Y@EGAT.CO.TH,
Not for Resale,2016-09-15 03:57:48 UTC

produce an over-voltage of around 2000 kV which is far in excess of the insulation levels of overhead distribution lines.

The goal to reduce lightning-caused flashovers is why IEEE Std 1410-2004 concentrates on the voltage levels rather than the current levels of lightning. The main factor revolves around the CFO which is defined as the voltage level at which statistically there is a 50% chance of a flashover and 50% chance of withstand. Both direct strikes and strokes collected by nearby shielding objects might affect the flashover performance of the line.

Because the main purpose of IEEE Std 1410-2004 is to reduce flashovers rather than to provide a shield to the line, the guide concentrates on other design components in addition to shielding such as: grounding, insulation levels, surge arrester application, system configuration, etc. However, the focus is on comparing the shielding aspects of the guides rather than the other design components to reduce flashovers to distribution lines. The shielding discussions in IEEE Std 1410-2004 include two types of shielding: shielding from nearby structures and trees, and shield wire above the distribution line.

The model of shielding from nearby structures and trees uses a shielding factor to reduce the number of lightning flashes that would otherwise strike the line. The shielding factor is based on height of the object that is providing the shielding and the distance of the shielding object from the line.

The model of shielding wire to protect the line uses a direct angle method. For lines under 15 m tall and conductor spacing less than 2 m an angle of 45 degrees is suggested. The guide refers to IEEE Std 1243-1997 [B71] for more information regarding shielding angles. However, most of the shielding angle curves for transmission circuits start with a critical current of 5 kA which is high for distribution circuits. A range of 2 to 3 kA is accepted as a minimum lightning stroke current for distribution circuits. This would reduce the shield angle required. The electrogeometric models that form the basis of shielding angle recommendations are also under continuous review. The guide suggests that for newer construction or design standards, a shielding angle of 30 degrees should be considered.

I.2.4 Phenomena models and methods of IEEE Std 1410-2004

I.2.4.1 Models

Lightning occurs during rainstorms, snowstorms, and other natural phenomena. In most areas, rainstorms are the primary source of lightning.

IEEE Std 1410-2004 [B73] discusses ground flash density (GFD) based on historical information to calculate the likelihood that a distribution line will encounter a lightning-caused flashover.

Lightning strokes travel through air to ground or a grounded object.

I.2.4.2 Shielding methods

IEEE Std 1410-2004 does not specifically recommend one method as the one and only model to use for OH distribution line protection. The shielding from nearby structures and trees and the shield wire methods are described in the guide. In addition a reference to IEEE Std 1243-1997 suggests review of additional methods for shield wire protection specifically the EGM method. In addition, Annex B of the guide (which is informative) discusses the EGM for shielding design

Route selection can take advantage of shielding from nearby structures and trees in a parallel path with the line. Shielding includes use of objects on both sides of the distribution line to determine shielding factors

Copyright © 2013 IEEE. All rights reserved.

Copyright The Institute of Electrical and Electronics Engineers, Inc.
Provided by IHS under license with IEEE
No reproduction or networking permitted without license from IHS

Order Number: 02120914
Sold to:EGAT [700166108393] - VARRIS.Y@EGAT.CO.TH,
Not for Resale,2016-09-15 03:57:48 UTC

that reduce the GFD effects on the line. Height of the objects and distance from the line are used in calculating the shielding factor.

I.2.4.3 Fixed-angle method with shield wire

The designer may position shield wire above the overhead distribution line to intercept the lightning strike. To help ensure that most lightning strokes terminate on the shield wire rather than on the phase conductors, a shielding angle is recommended to provide adequate protection. Angles of 45 degrees and 30 degrees are discussed in IEEE Std 1410-2004 [B73]. IEEE Std 1410-2004 suggests a 45 degree angle be used and that a review of the historic lightning performance of lines in the specific area be used when verifying adequate protection or if a smaller angle could be considered in new construction or design standards.

I.2.4.4 EGM

Annex B in IEEE Std 1410-2004 discusses the use of an electrogeometric model to estimate the shielding factor based on the idea that a distribution line or other object has a certain attractive radius that increased with height. The attractive radius is also dependent on the current magnitude of the lightning flash.

The EGM is used for shielding factor calculations, and for induced voltage flashover calculations. It could also be used to estimate the number of direct flashes to a distribution line.

The EGM is an alternate to the Eriksson formula for direct flash rate. The results of EGM and Eriksson formula are similar for lines less than 15 m high. The results vary for higher lines and for different lateral striking distance expressions and for different ground resistivity values.

I.3 Comparison of IEC 62305 and IEEE Std 998

I.3.1 The scope of IEC 62305

The scope of IEC 62305 [B66] includes general principles for protection against lightning of structures (including their installations and contents as well as persons) and services connected to a structure.

I.3.2 Observations

IEC 62305 consists of the following parts, under the general title “Protection against lightning”:

a) Part 1: General principles
b) Part 2: Risk management
c) Part 3: Physical damage to structures and life hazard
d) Part 4: Electrical and electronic systems within structures

The IEC is focused on two aspects with regard to the effect of lightning:

a) Lightning current due to direct lightning flash and
b) Lightning electromagnetic pulse (LEMP), which includes conducted and radiated electromagnetic field effect

Copyright © 2013 IEEE. All rights reserved.
Copyright The Institute of Electrical and Electronics Engineers, Inc.
Provided by IHS under license with IEEE
No reproduction or networking permitted without license from IHS
Order Number: 02120914
Sold to:EGAT [700166108393] - VARRIS.Y@EGAT.CO.TH,
Not for Resale,2016-09-15 03:57:48 UTC

The second aspect is not covered in IEEE Std 998.

IEC 62305 is a prescriptive standard based on principles previously accepted by scientific community. IEC itself does not provide any discussion or explanation of the basic physical phenomenon of lightning. This standard also does not provide the history of development of the theoretical models to estimate the protected space.

IEC 62305 defines four *lightning protection levels* based on probability of lightning current being within certain upper and lower limits. IEC 62305 Part 1 references the IEEE working group report for the rolling sphere model and CIGRE (Electra No. 41 and 69) for lightning current parameters. IEC 62305 Part 3 is compiled from previous IEC 61024-1 and IEC 61024-1-2. The bibliography in IEC 62305 Part 3 does not include theoretical papers (other than IEC and EN standards) to establish theoretical or experimental basis of the models prescribed by IEC.

I.3.3 Phenomena models and methods of IEC 62305

IEC 62305 Part 1 [B66] prescribes using the guidelines of Part 3 for protection of structures. The methods accepted by Part 3 of IEC 62305 regarding the positioning of lightning protection system are:

a) Rolling sphere method

b) Protection angle method

c) Mesh method

I.3.4 Methods/models

I.3.4.1 Rolling sphere method

I.3.4.1.1 Model

a) This model is based on the principle of minimum distance.

b) There is no discussion in IEC 62305 on the model for the physical process of initiation.

c) The lightning stroke travels through the air. There is no discussion in IEC on the physical process of the travel.

d) The lightning stroke will only terminate on a grounded (earthed) object.

I.3.4.1.2 Method

a) Determine the minimum stroke current for the object to be protected.

b) Determine the corresponding lightning protection level from the look up table. The minimum stroke current is a probabilistic parameter rather than an absolute value. For example, the probability of the minimum peak current being higher than 3 kA (corresponding to Level I) is 99%.

c) Determine the radius of rolling sphere from the look up table for the intended lightning protection level.

Copyright © 2013 IEEE. All rights reserved.

Copyright The Institute of Electrical and Electronics Engineers, Inc.
Provided by IHS under license with IEEE
No reproduction or networking permitted without license from IHS

Order Number: 02120914
Sold to:EGAT [700166108393] - VARRIS.Y@EGAT.CO.TH,
Not for Resale,2016-09-15 03:57:48 UTC

d) Positioning is intended to create a configuration that results in stroke termination on the protective equipment rather than the protected object.

e) The object is considered to be protected for the specific minimum stroke current, if the rolling sphere with the specific radius only touches the protective equipment (consisting air termination devices, earthed conductor, etc.) and does not touch the object to be protected when the "sphere" is rolled over the complete configuration of objects and protective equipment.

Note on the method

The rolling sphere radius for a particular lightning protection level is assigned by IEC on the basis of the lower limit of lightning current that the level intends to protect. Part I of IEC 62305 [B66] subscribes to only the rolling sphere method or EGM (electrogeometric model) and references IEEE "Estimating lightning performance of transmission lines II—Updates to analytic models" [B77]. The rolling sphere method is prescribed by IEC 62305 Part 3 to be suitable in all cases. It is noted that IEC imperatively subscribed to the striking distance model developed for the purpose of protection of transmission lines and applied the model for lightning protection for all common structures within the scope of this IEC document.

I.3.4.2 Protection angle method

I.3.4.2.1 Model

a) This model is based on the principle of minimum distance rather than a fixed angle of protection.

b) There is no discussion in IEC 62305 on the model for the physical process of initiation.

c) The lightning stroke travels through the air. There is no discussion in IEC on the physical process of the travel.

d) The lightning stroke will only terminate on a grounded (earthed) object.

I.3.4.2.2 Method

a) Determine the probabilistic minimum stroke current for the object to be protected.

b) Determine the corresponding lightning protection level from the look up table.

c) Determine whether the height of the object is more than the rolling sphere radius for the corresponding lightning protection level. If yes, follow rolling sphere method. If not, determine the protection angle required for a particular height of the object and the relative height of the air termination.

d) Positioning is intended to create a configuration that results in stroke termination on the protective equipment rather than the protected object.

e) The object is considered to be protected for the specific minimum stroke current if the angle created by the air termination is less than the required angle of protection of protection for the height of the object.

Note on the method

The protection angle method is prescribed to be suitable for simple-shaped buildings or structures and small parts of bigger structures, with limitation of structure height within than the prescribed radius of rolling sphere for a given lightning protection level. The protection angle method is widely used historically. This

--`,,,,,,`,```,,`,`,,`,-`-`,,`,,,`---

Copyright © 2013 IEEE. All rights reserved.

Copyright The Institute of Electrical and Electronics Engineers, Inc.
Provided by IHS under license with IEEE
No reproduction or networking permitted without license from IHS

Order Number: 02120914
Sold to:EGAT [700166108393] - VARRIS.Y@EGAT.CO.TH,
Not for Resale,2016-09-15 03:57:48 UTC

method acknowledges that the "angle of protection" cannot be a fixed parameter and varies with height of air termination above the surface to be protected. IEC 62305 Part 3 provides curves showing the angle of protection for varying height of air termination for different levels of protection defined in Part 1. It is observed that the horizontal geometrical distance covered by the prescribed curves are less than that covered by rolling sphere of the radius corresponding to each lightning protection level. In other words, the protection angle method followed by IEC 62305 is a simplified approach on the basis of principle of minimum distance to provide the end users a readily available guideline for simple structures.

I.3.5 Mesh method

I.3.5.1 Model

a) The lightning stroke will only terminate on a grounded (earthed) conductors placed on the roof of the object. This is probably based on the superior conductivity of air termination material over the general structural material used for roof.

b) There is no discussion in IEC 62305 on the model for the physical process of initiation.

c) The lightning stroke travels through the air. There is no discussion on the physical process of the travel.

I.3.5.2 Method

a) Determine the probabilistic minimum stroke current for the object to be protected

b) Determine the corresponding lightning protection level from the look up table.

c) Determine the required minimum size of mesh for the applicable lightning protection level for the plane surface to be protected.

d) Positioning is intended to create a configuration that results in stroke termination on the protective equipment rather than the protected object.

e) The object is considered to be protected for the specific minimum stroke current if the dimension of the mesh (width and length) is less than the minimum mesh size prescribed for the applicable lightning protection level.

Note on the method

The mesh method is prescribed to be a suitable form of protection where plane surfaces are required to be protected. The method is considered to protect the whole surface under certain conditions, such as positioning of air-termination conductors on prescribed locations, limiting mesh dimensions within prescribed limits, providing minimum two direct routes to earth, prohibiting any metal installation to protrude outside the volume of protection provided by the mesh method. Location of an isolated metallic part on the same plane of protected surface is apparently not prohibited by this method. However, the minimum distance principle could necessitate a minimum height of the mesh over the roof in case of presence of a metallic part on the roof requiring protection.

Copyright © 2013 IEEE. All rights reserved.
Copyright The Institute of Electrical and Electronics Engineers, Inc.
Provided by IHS under license with IEEE
No reproduction or networking permitted without license from IHS
Order Number: 02120914
Sold to:EGAT [700166108393] - VARRIS.Y@EGAT.CO.TH,
Not for Resale,2016-09-15 03:57:48 UTC

Annex J

(informative)

Bibliography

Bibliographical references are resources that provide additional or helpful material but do not need to be understood or used to implement this standard. Reference to these resources is made for informational use only.

[B1] AIEE Committee Report, "A Method of Estimating Lightning Performance of Transmission Lines," *AIEE Transactions,* vol. 69, no.2, pp. 1187–1196, Jan. 1950.

[B2] AIEE Subcommittee on Lightning Protective Devices, "Present Practice Regarding Direct Stroke Shielding in the Lightning Protection of Stations and Substations," *AIEE Conference Paper,* Jan. 1953.

[B3] Ait-Amar, S., and G. Berger, "Influence of Edges and Corners on the Protection Offered by a Lightning Rod Installed on a Building Roof," *WSEAS Transactions on Systems,* vol. 4, pp. 1163–1170, 2005.

[B4] Alizade, A. A., M. M. Muslimov, and E. L. Khydyrov, "Study of Electric Field Strength Due to Lightning Stroke Currents," *Elektrichestvo* [*Electric Technology* (USSR)], no. 4, pp. 51–56, 1976.

[B5] Allen, N. L., K. J. Cornick, D. C. Faircloth, and C. M. Kouzis, "Tests of the 'Early Streamer Emission' Principle for Protection Against Lightning," *IEE Proceedings Science, Measurement & Technology,* vol. 145, no. 5, pp. 200–206, Sept. 1998.

[B6] Anderson, J. G., "Monte Carlo Computer Calculation of Transmission-Line Lightning Performance," *AIEE Transactions,* vol. 80, no. 3, pp. 414–420, Aug. 1961.

[B7] Anderson, J. G., chapter 12 of *Transmission Line Reference Book 345 kV and Above,* 2nd Ed. Rev. Palo Alto, CA: Electric Power Research Institute, 1987.

[B8] Anderson, R. B., and A. J. Eriksson, "Lightning Parameters for Engineering Application," *Electra,* no. 69, pp. 65–102, Mar. 1980.

[B9] Anderson R. B., A. J. Eriksson, H. Kroninger, D. V. Meal, and M. A. Smith, "Lightning and Thunderstorm Parameters," *IEEE Conference Publication no. 236, Lightning and Power Systems,* London, pp. 57–61, June 1984.

[B10] Anderson, J. G., F. A. Fisher, and E. E. Magnusson, "Calculation of Lightning Performance of E.H.V. Lines," in *EHV Transmission Line Reference Book,* p. 285, New York: Edison Electric Inst., 1968.

[B11] Becerra, M., and V. Cooray, "A Self-Consistent Upward Leader Propagation Model," *Journal of Physics D: Applied Physics,* vol. 39, no. 16, pp. 3708–3715, Aug. 2006.

[B12] Becerra, M., and V. Cooray, "A Simplified Physical Model to Determine the Lightning Upward Connecting Leader Inception," *IEEE Transactions on Power Delivery,* vol. 21, pp. 897–908, Apr. 2006.

[B13] Becerra, M., V. Cooray, and F. Roman, "Lightning Striking Distance of Complex Structures," *IET Generation, Transmission & Distribution,* vol. 2, pp. 131–138, Jan. 2008.

[B14] Berger, G., and N. Floret, "Collaboration Produces a New Generation of Lightning Rods," *Power Technology International,* pp. 185–190, London: Sterling Publications, 1991.

[B15] Berger, K., "Discussion of Group 33 on Lightning and Surges," *CIGRE Proceedings*, vol. 2, pp. 2, 10–11, 1968.

[B16] Berger, K., "The Earth Flash," chapter 5 in Golde, R. H. (Ed.), *Lightning,* vol. 1, London: Academic Press, 1977.

Copyright © 2013 IEEE. All rights reserved.
Copyright The Institute of Electrical and Electronics Engineers, Inc.
Provided by IHS under license with IEEE
No reproduction or networking permitted without license from IHS
Order Number: 02120914
Sold to:EGAT [700166108393] - VARRIS.Y@EGAT.CO.TH,
Not for Resale,2016-09-15 03:57:48 UTC

[B17] Berger, K., "Methoden und Resultate der Blitzforschung auf dem Monte San Salvatore bei Lugano in den Jahren 1963–1971," *Bulletin de l'Association Suisse des Electriciens,* pp. 1403–1421.

[B18] Berger, K., "Novel Observations on Lightning Discharges: Results of Research on Mount San Salvatore," *Journal of the Franklin Institute,* vol. 283, no. 6, pp. 478–525, June 1967.

[B19] Berger, K., R. B. Anderson, and H. Kroninger, "Parameters of Lightning Flashes," *Electra,* no. 41, pp. 23–37, July 1975.

[B20] Berger, K., and E. Vogelsanger, "New Results of Lightning Observations," CIGRE Paper no. 33-03, vol. 2, 1968.

[B21] Bernardi, M., L. Dellera, E. Garbagnati, and G. Sartorio, "Leader Progression Model of Lightning: Updating of the Model on the Basis of Recent Test Results," *Proceedings of the 23rd International Conference on Lightning Protection (ICLP),* Florence, Italy, pp. 399–407, Sept. 1996.

[B22] Braunstein, A., "Lightning Strokes to Power Transmission Lines and the Shielding Effect of Ground Wires," *IEEE Transactions on Power Apparatus Systems,* vol. PAS-89, pp. 1900–1910, Nov./Dec. 1970.

[B23] Brook, M., and T. Ogawa, "The Cloud Discharge," chapter 6 in Golde, R. H. (Ed.), *Lightning,* vol. 1, London: Academic Press, 1977.

[B24] Brown, G. W., "Lightning Performance II—Updating Backflash Calculations," *IEEE Transactions on Power Apparatus and Systems,* vol. PAS-97, no. 1, pp. 39–52, 1978.

[B25] Brown, G. W., and E. R. Whitehead, "Field and Analytical Studies of Transmission Line Shielding: Part II," *IEEE Transactions on Power Apparatus and Systems,* vol. PAS-88, no. 5, pp. 617–626, 1969.

[B26] Burgsdorf, V. V., "Lightning Protection of Overhead Transmission Lines and Operating Experience in the USSR," CIGRE paper no. 326, 29 pages, 1958.

[B27] Carpenter, R. B., Jr., "Lightning Elimination." Paper PCI-76-16 given at the 23rd Annual Petroleum and Chemical Industry Conference, 76CH1 109-8-IA, Philadelphia, PA, Aug. 1976.

[B28] Carrara, G., and L. Thione, "Switching Surge Strength of Large Air Gaps: A Physical Approach," *IEEE Transactions on Power Apparatus and Systems*, vol. 95, no. 2, pp. 512–524. Mar./Apr. 1976.

[B29] Chalmers, I. D., J. C. Evans, and W. H. Siew, "Considerations for the Assessment of Early Streamer Emission Lightning Protection," *IEE Proceedings: Science, Measurement & Technology,* vol. 146, no. 2, pp. 57–63, Mar. 1999.

[B30] Changery, M. J., "National Thunderstorm Frequencies for the Contiguous United States," Report no. NUREG/CR-2252, National Oceanic and Atmospheric Administration, Ashville, NC, Nov. 1981.

[B31] "Charge Dissipation Gives, for the First Time, Lightning Prevention," *Broadcast Management Engineering,* Sept. 1972.

[B32] Cianos, N., and E. T. Pierce, "A Ground-Lightning Environment for Engineering Usage." Technical Report 1, Menlo Park, CA: Stanford Research Institute, Aug. 1972.

[B33] "CIGRE Sums Up Lightning Research." *Electrical World*, vol. 194, no. 2, pp. 72–75, July 1980.

[B34] CIGRE Task Force 33.01.03, "Lightning Exposure of Structures and Interception Efficiency of Air Terminals," Technical Brochure 118, Paris: CIGRE, Oct. 1997.

[B35] CIGRE WG 33-01 [convener A. Eriksson], "Guide to Procedures for Estimating the Lightning Performance of Transmission Lines," CIGRE Brochure 63, Oct. 1991.

[B36] Clayton, J. M., and F. S. Young, "Estimating Lightning Performance of Transmission Lines," *IEEE Transactions on Power Apparatus and Systems,* vol. 83, no. 11, pp. 1102–1110, Nov. 1964.

[B37] Cobine, J. D., *Gaseous Conductors: Theory and Engineering Application.* New York: Dover, 1952.

[B38] Cooray, V. and CIGRE WG C4.405, "Lightning Interception: A Review of Simulation Procedures Utilized to Study the Attachment of Lightning Flashes to Grounded Structures," *Electra,* no. 237, pp. 48–55, Aug. 2011.

Copyright © 2013 IEEE. All rights reserved.

Copyright The Institute of Electrical and Electronics Engineers, Inc.
Provided by IHS under license with IEEE
No reproduction or networking permitted without license from IHS

Order Number: 02120914
Sold to:EGAT [700166108393] - VARRIS.Y@EGAT.CO.TH,
Not for Resale,2016-09-15 03:57:48 UTC

[B39] Cooray, V., V. Rakov, and N. Theethayi, "The Relationship Between the Leader Charge and the Return Stroke Current—Berger's Data Revisited," *Proceedings of the 27th International Conference on Lightning Protection,* Avignon, France, Sept. 2004.

[B40] D'Alessandro, F., "On the Optimum Rod Geometry for Practical Lightning Protection Systems," *Journal of Electrostatics,* vol. 65, pp. 113–121, 2007.

[B41] D'Alessandro, F., "The Use of 'Field Intensification Factors' in Calculations for Lightning Protection of Structures," *Journal of Electrostatics,* vol. 58, no. 1–2, pp. 17–43, May 2003.

[B42] D'Alessandro, F., and J. R. Gumley, "A 'Collection Volume Method' for the Placement of Air Terminals for the Protection of Structures Against Lightning," *Journal of Electrostatics,* vol. 50, no. 1, pp. 279–302, Mar. 2001.

[B43] Dainwood, W. H., and S. W. Kercel, "An Analytical Approach to the Design of a Three-Dimensional Array of Overhead Shield Wires," IEEE Conference Paper no. C75 044-3, 1975.

[B44] Darveniza, M., F. Popolansky, and E. R. Whitehead, "Lightning Protection of UHV Transmission Lines," *Electra,* no. 41, pp. 39–69, July 1975.

[B45] Dellera, L., and E. Garbagnati, "Lightning Stroke Simulation by Means of the Leader Progression Model. Part I. Description of the Model and Evaluation of Exposure of Free-Standing Structures," *IEEE Transactions on Power Delivery,* vol. 5, no. 4, pp. 2009–2022, Oct. 1990.

[B46] Eriksson, A. J., "An Improved Electrogeometric Model for Transmission Line Shielding Analysis," *IEEE Transactions on Power Delivery,* vol. 2, no. 3, pp. 871–886, July 1987.

[B47] Eriksson, A. J., "The Incidence of Lightning Strikes to Power Lines," *IEEE Transactions on Power Delivery,* vol. 2, no. 3, pp. 859–870, July 1987.

[B48] Eriksson, A. J., "The Lightning Round Flash—An Engineering Study," PhD thesis, University of Natal, Pretoria, South Africa, Dec. 1979. [Council for Scientific and Industrial Research (CSIR) Special Report, ELEK 189.]

[B49] Eriksson, A. J., "Lightning Striking Distances—An Analytical Study," *Proceedings of the 6th International Conference on Gas Discharges and their Applications,* pp. 143–146, Edinburgh, U.K., 1980.

[B50] Eriksson, A. J., "Lightning and Tall Structures," *Transaction South African IEE*, vol. 69, no. 8, pp. 238–252, Aug. 1978. Discussion and closure in vol. 70, no. 5, 12 pages, May 1979.

[B51] Fink, D. B., and H. W. Beaty *Standard Handbook for Electrical Engineers*, 11th ed. New York: McGraw-Hill, 1978.

[B52] Fujitaka, S., J. Tomiyama, Y. Hirose, and T. Issiki, "Investigation on Lightning Protection for Electric Power System in Japan," CIGRE Paper no. 323, 21 pages, 1958.

[B53] Giffard, W. F., and J. J. Owens, "Optimizing Substation Shielding," presented at *Sixth Annual Transmission and Substation Design and Operating Symposium,* University of Texas at Arlington, Sept. 1973.

[B54] Gilman D. W., and E. R. Whitehead, "The Mechanism of Lightning Flashover on High Voltage and Extra-High Voltage Transmission Lines," *Electra,* no. 27, pp. 65–96, Mar. 1973.

[B55] Golde, R. H., "The Frequency of Occurrence and the Distribution of Lightning Flashes to Transmission Lines," *AIEE Transactions,* vol. 64, no. 12, pp. 902–910, 982–984, 1945.

[B56] Golde, R. H., "Lightning Conductor," chapter 17 in Golde, R. H. (Ed.), *Lightning*, vol. 2, London: Academic Press, 1977.

[B57] Golde, R. H., "A Lightning Flash Counter," *Electronic Engineering,* vol. 38, pp. 164–166, 1966.

[B58] Golde, R. H., "Lightning Protection of Tall Structures," in Hughes, J. (Ed.), *Review of Lightning, Protection Technology for Tall Structures,* [Publication no. AD-A075 449], Arlington, VA: Office of Naval Research, pp. 243–249, 1977.

--`,,,,,,`,```,,`-`-`,,`,,`,`,,`---
Copyright © 2013 IEEE. All rights reserved.

Copyright The Institute of Electrical and Electronics Engineers, Inc.
Provided by IHS under license with IEEE
No reproduction or networking permitted without license from IHS

Order Number: 02120914
Sold to:EGAT [700166108393] - VARRIS.Y@EGAT.CO.TH,
Not for Resale,2016-09-15 03:57:48 UTC

[B59] Golde, R. H., "'Radio-Active' Lightning Conductors," *Lightning Protection,* London: Edward Arnold Publishing, pp. 37–40, 196–197, 1973.

[B60] Golde, R. H., "The Validity of Lightning Tests with Scale Models," *Journal of the Institution of Electrical Engineers, Part II: Power Engineering,* vol. 88, no. 2, pp. 67–68, Apr. 1941.

[B61] Gorin, B. N., V. I. Levitov, and A. V. Shkilev, "Lightning Strokes on Ostankino TV Tower in Moscow," *Elektrichestvo* [*Electric Technology* (USSR)], no. 3, pp. 45–55, 1977.

[B62] Heary, K. P., A. Z. Chaberski, S. Gumley, J. R. Gumley, F. Richens, and J. H. Moran, "An Experimental Study of Ionizing Air Terminal Performance," *IEEE Transactions on Power Delivery,* vol. 9, no. 2, pp. 1175–1184, Apr. 1989.

[B63] Hepworth, J. K., R. C. Klewe, E. H. Lobley, and B. A. Tozer, "The Effect of A.C. Bias Fields on the Impulse Strength of Point-Plane and Sphere-Plane Gaps," *IEEE Transactions on Power Apparatus and Systems*, vol. 92, no. 6, pp. 1898–1903, 1973. Discussion by K. Freser.

[B64] Horn, F. W., and R. B. Ramsey, "Cable Sheath Problems and Design," *Electronic Engineering,* vol. 70, pp. 1070–1075, 1951.

[B65] Horvath, T., *Computation of Lightning Protection,* Taunton, Somerset, England: Research Studies Press, pp. 22, 23, 76, 77, 92, 93, 144–147, 1991.

[B66] IEC 62305-1, Ed. 1.0 2006-01, Protection Against Lightning—Part 1: General Principles.[4]

[B67] IEEE Committee Report, "Lightning Protection in Multi-Line Stations," *IEEE Transactions on Power Apparatus and Systems,* vol. 87, no. 6, pp. 1514–1521, June 1968.[5]

[B68] IEEE Std 4™-1995, IEEE Standard Techniques for High-Voltage Testing. [ANSI approved.][6]

[B69] IEEE 100™, IEEE Standard Dictionary of Electrical and Electronics Terms.

[B70] IEEE Std 605™, IEEE Guide for Bus Design in Air Insulated Substations.

[B71] IEEE Std 1243™-1997, IEEE Guide for Improving the Lightning Performance of Transmission Lines.

[B72] IEEE Std 1313™, IEEE Standard for Power Systems—Insulation Coordination.

[B73] IEEE Std 1410™-2004, IEEE Guide for Improving the Lightning Performance of Electric Power Overhead Distribution Lines.

[B74] IEEE Std 1410™-2010, IEEE Guide for Improving the Lightning Performance of Electric Power Overhead Distribution Lines.

[B75] IEEE Std C62.22™, IEEE Guide for the Application of Metal-Oxide Surge Arresters for Alternating-Current Systems. [ANSI approved.]

[B76] IEEE Transmission Substation Subcommittee, Bibliography of Publications Pertaining to Lightning Protection, *IEEE Transactions on Power Apparatus and Systems,* vol. 94, no. 4, pp. 1241–1247, July/Aug. 1975.

[B77] IEEE Working Group, "Estimating Lightning Performance of Transmission Lines II—Updates to Analytic Models," *IEEE Transactions on Power Delivery,* vol. 8, no. 3, pp. 1254–1267, July 1993.

[B78] IEEE Working Group, "A Simplified Method for Estimating Lightning Performance of Transmission Lines," *IEEE Transactions on Power Apparatus and Systems,* vol. 104, no. 4, pp. 919–932, Apr. 1985.

[4] IEC publications are available from the Sales Department of the International Electrotechnical Commission, 3 rue de Varembé, PO Box 131, CH-1211, Geneva 20, Switzerland (http://www.iec.ch/). IEC publications are also available in the United States from the Sales Department, American National Standards Institute, 25 West 43rd Street, 4th Floor, New York, NY 10036, USA (http://www.ansi.org).

[5] IEEE publications are available from The Institute of Electrical and Electronics Engineers (http://standards.ieee.org/).

[6] The IEEE standards or products referred to in this clause are trademarks of The Institute of Electrical and Electronics Engineers, Inc.

Copyright © 2013 IEEE. All rights reserved.

Copyright The Institute of Electrical and Electronics Engineers, Inc.
Provided by IHS under license with IEEE
No reproduction or networking permitted without license from IHS

Order Number: 02120914
Sold to:EGAT [700166108393] - VARRIS.Y@EGAT.CO.TH,
Not for Resale,2016-09-15 03:57:48 UTC

[B79] IEEE Working Group on Insulator Switching Surges, Lightning and Insulators Subcommittee, "Guide for Application of Insulators to Withstand Switching Surges," *IEEE Transactions on Power Apparatus and Systems,* vol. 94, no. 1, pp. 58–67, Jan. 1975.

[B80] Kolokolov, V. P., and G. P. Pavlova, "Relations Between Some Thunderstorm Parameters," *Trudy* [Scientific Translation, Jerusalem], vol. 277, pp. 33–35, 1972.

[B81] Kumar, U., P. K. Bokka, and J. Padhi, "A Macroscopic Inception Criterion for the Upward Leaders of Natural Lightning," *IEEE Transactions on Power Delivery*, vol. 20, no. 2, pp. 904–911, Apr. 2005.

[B82] Lalande, P., A. Bondiou-Clergerie, G. Bacchiega, and I. Gallimberti, "Observations and Modeling of Lightning Leaders," *Comptes Rendus de l'Académie des Sciences: Serié IV Physique et Astrophysique,* vol. 3, pp. 1375–1392, Dec. 2002.

[B83] Lalande, P., A. Bondiou-Clergerie, P. Laroche, A. Eybert-Berard, J. P. Berlandis, B. Bador, A. Bonamy, M. A. Uman, V. A. Rakov, "Leader Properties Determined with Triggered Lightning Techniques," *Journal of Geophysical Research Atmospheres,* vol. 103, no. D12, pp. 14109–14115, Jan. 1998.

[B84] Lee, R. H., "Lightning Protection of Buildings." *IEEE Transactions on Industry Applications,* vol. 15, no. 3, pp. 236–240, May/June 1979.

[B85] Lee, R. H., "Protection Zone for Buildings Against Lightning Strokes Using Transmission Line Protection Practice." *IEEE Transactions on Industry Applications,* vol. 14, no. 6, pp. 465–470, 1978.

[B86] Lee R. H., "Protect Your Plant Against Lightning," *Instruments and Control Systems,* vol. 55, no. 2, pp. 31–34, Feb. 1982.

[B87] Linck, H., discussion of "The Frequency Distribution of Current Magnitudes of Lightning Strokes to Tall Structures," *IEEE Transactions on Power Apparatus and Systems,* vol. 91, no. 5, pp. 2228–2229, 1972.

[B88] Linck, H., "Shielding of Modern Substations Against Direct Lightning Strokes," *IEEE Transactions on Power Apparatus and Systems,* vol. 90, no. 5, pp. 1674–1679, Sept–Oct. 1975.

[B89] Lowke, J. J., "Theory of Electrical Breakdown in Air—The Role of Metastable Oxygen Molecules," *Journal of Physics D: Applied Physics,* vol. 25, no. 2, pp. 202–210, Feb. 1992.

[B90] MacGorman, D. R., M. W. Maier, and W. D. Rust, "Lightning Strike Density for the Contiguous United States from Thunderstorm Duration Record," report no. NUREG/CR-3759, National Oceanic and Atmospheric Administration, Norman, OK, May 1984.

[B91] MacGorman, D. R., and W. D. Rust, "An Evaluation of the LLP and LPATS Lightning Ground Strike Mapping Systems," pp. 235–240 of Addendum of *Proceedings of International Aerospace and Ground Conference on Lightning and Static Electricity,* Oklahoma City, OK, Apr. 1988.

[B92] Mackerras, D., M. Darveniza, and A. C. Liew, "Review of Claimed Enhanced Lightning Protection of Buildings by Early Streamer Emission Air Terminals," *IEE Proceedings: Science, Measurement & Technology,* vol. 144, pp. 1–10, Jan. 1997.

[B93] McEachron, K. B., "Lightning to the Empire State Building," *Journal of the Franklin Institute*, vol. 227, no. 2, pp. 149–217, Feb. 1939.

[B94] Melander, B. G., "Atmospheric Electricity Threat Definition for Aircraft Lightning Protection," *Proceedings of International Aerospace and Ground Conference on Lightning and Static Electricity,* paper no. 36, Fort Worth, TX, 37 pages, 1983.

[B95] Melander, B. G., "Effects of Tower Characteristics on Lightning Arc Measurements," *Proceedings of International Aerospace and Ground Conference on Lightning and Static Electricity,* paper no. 34, Orlando, FL, 12 pages, 1984.

[B96] Miyake, K., "Development of Measuring System on Lightning Discharge and Explication for Characteristics of Winter Lightning," *CRIEPI Report No. T36,* Japan, 1994.

Copyright © 2013 IEEE. All rights reserved.

Copyright The Institute of Electrical and Electronics Engineers, Inc.
Provided by IHS under license with IEEE
No reproduction or networking permitted without license from IHS

Order Number: 02120914
Sold to:EGAT [700166108393] - VARRIS.Y@EGAT.CO.TH,
Not for Resale,2016-09-15 03:57:48 UTC

[B97] Moore, C. B., G. Aulich, and W. Rison, "The Case for Using Blunt-Tipped Lightning Rods as Strike Receptors," *Journal of Applied Meteorology,* vol. 42, pp. 984–993, July 2003.

[B98] Moore, C. B., G. Aulich, and W. Rison, "Measurement of Lightning Rod Responses to Nearby Strikes," *Geophysical Research Letters,* vol. 27, pp. 1487–1490, 2000.

[B99] Moore, C. B., W. Rison, J. Mathis, and G. Aulich, "Lightning Rod Improvement Studies," *Journal of Applied Meteorology,* vol. 39, pp. 593–609, 2000.

[B100] Moore, C. B., and B. Vonnegut, "The Thundercloud," chapter 3 in Golde, R. H. (Ed.), *Lightning*, vol. 1, London: Academic Press, 1977.

[B101] Mousa, A. M., "The Applicability of Lightning Elimination Devices to Substations and Power Lines," *IEEE Transactions on Power Delivery,* vol. 13, pp. 1120–1127, 1998.

[B102] Mousa, A. M., "A Computer Program for Designing the Lightning Shielding Systems of Substations," *IEEE Transactions on Power Delivery,* vol. 6, no. 1, pp. 143–152, 1991.

[B103] Mousa, A. M., "Effect of Height of Structure on the Striking Distance of a Downward Lightning Flash," *Proceedings of International Communications and Energy Conference,* IEEE Publication no. 84CH20412, Montreal, Quebec, pp. 9–14, Oct. 1984.

[B104] Mousa, A. M., "Shielding of High-Voltage and Extra-High-Voltage Substations," *IEEE Transactions on Power Apparatus and Systems,* vol. 95, no. 4, pp. 1303–1310, July/Aug. 1976.

[B105] Mousa, A. M., discussion of "A Simplified Method for Estimating Lightning Performance of Transmission Lines," *IEEE Transactions on Power Apparatus and Systems,* vol. 104, no. 4, p. 930, Apr. 1985.

[B106] Mousa, A. M., "A Study of the Engineering Model of Lightning Strokes and Its Application to Unshielded Transmission Lines," Ph.D. Thesis, University of British Columbia, Vancouver, Canada, Aug. 1986.

[B107] Mousa, A. M., and K. D. Srivastava, discussion of "The East Coast Lightning Detection Network," *IEEE Transactions on Power Delivery,* vol. 2, no. 3, pp. 904–905, July 1987.

[B108] Mousa, A. M., and Srivastava, K. D., "Effect of Shielding by Trees on the Frequency of Lightning Strokes to Power Lines," *IEEE Transactions on Power Delivery,* vol. 3, no. 2, pp. 724–732, 1988.

[B109] Mousa, A. M., and K. D. Srivastava, "The Implications of the Electrogeometric Model Regarding Effect of Height of Structure on the Median Amplitudes of Collected Lightning Strokes," *IEEE Transactions on Power Delivery,* vol. 4, no. 2, pp. 1450–1460, 1989.

[B110] Mousa, A. M., and K. D. Srivastava, discussion of "An Improved Electrogeometric Model for Transmission Line Shielding Analysis," *IEEE Transactions on Power Delivery,* vol. 2, no. 3, pp. 880–881, July 1987.

[B111] Mousa, A. M., and K. D. Srivastava, "The Lightning Performance of Unshielded Steel-Structure Transmission Lines," *IEEE Transactions on Power Delivery,* vol. 4, no. 1, pp. 437–445, 1989.

[B112] Mousa, A. M., and K. D. Srivastava, "A Revised Electrogeometric Model for the Termination of Lightning Strokes on Ground Objects," *Proceedings of International Aerospace and Ground Conference on Lightning and Static Electricity,* Oklahoma City, OK, pp. 342–352, Apr. 1988.

[B113] Mousa, A. M., and K. D. Srivastava, "Shielding Tall Structures Against Direct Lightning Strokes," *Proceedings of Canadian Conference on Electrical and Computer Engineering,* Vancouver, British Columbia, pp. 28–33, Nov. 1988.

[B114] Muller-Hillebrand, D., "On the Frequency of Lightning Flashes to High Objects, A Study on the Gulf of Bothnia," *Tellus,* vol. 12, no. 4, pp. 444–449, 1960.

[B115] Orrell, J. T., "Direct Stroke Lightning Protection," paper presented at EEI Electrical System and Equipment Committee Meeting, Washington, D.C., 25 Oct. 1988 [reproduced in Annex G].

Copyright © 2013 IEEE. All rights reserved.

Copyright The Institute of Electrical and Electronics Engineers, Inc.
Provided by IHS under license with IEEE
No reproduction or networking permitted without license from IHS

Order Number: 02120914
Sold to:EGAT [700166108393] - VARRIS.Y@EGAT.CO.TH,
Not for Resale,2016-09-15 03:57:48 UTC

[B116] Orville, R., and H. Songster, "The East Coast Lightning Detection Network," *IEEE Transactions on Power Delivery,* vol. 2, no. 3, pp. 899–907, July 1987.

[B117] Paris, L., and R. Cortina, "Switching and Lightning Impulse Discharge Characteristics of Large Air Gaps and Long Insulator Strings," *IEEE Transactions on Power Apparatus and Systems,* vol. 87, no. 4, pp. 947–957, Apr. 1968.

[B118] Paris, L., A. Taschini, K. H. Schneider, and K. H. Weck, "Phase-to-Ground and Phase-to-Phase Air Clearances in Substations," *Electra,* no. 29, pp. 29–44, July 1973.

[B119] Peek, F. W., Jr., *Dielectric Phenomena in High Voltage Engineering*, New York: McGraw-Hill, 1929.

[B120] Petrov, N. I., G. Petrova, and R. T. Waters, "Determination of Attractive Area and Collection Volume of Earthed Structures," *Proceedings of the 25th International Conference on Lightning Protection (ICLP),* Rhodes, Greece, pp. 374–379, 2000.

[B121] Petrov, N. I., R. T. Waters, "Determination of the Striking Distance of Lightning to Earthed Structures," *Proceedings of the Royal Society of London A,* vol. 450, pp. 589–601, 1995.

[B122] Popolansky, F., "Measurement of Lightning Currents in Czechoslovakia and the Application of Obtained Parameters in the Prediction of Lightning Outages of EHV Transmission Lines," CIGRE Paper no. 33-03, 12 pages, 1970.

[B123] Powell, K. B., "Chart Simplifies Shielding Low Profile Substations," *Electrical World,* pp. 36–37, Apr. 1977.

[B124] Prentice, S. A., "CIGRE Lightning Flash Counter," *Electra,* no. 22, pp. 149–171, May 1972.

[B125] Prentice, S. A., "Frequency of Lightning Discharges," chapter 14 in Golde, R. H. (Ed.), *Lightning,* vol. 1, London: Academic Press, 1977.

[B126] Rakov, V. A., and M. A. Uman, *Lightning: Physics and Effects,* Cambridge University Press. 2007.

[B127] Rizk, F. A. M., "Modeling of Lightning Incidence to Tall Structures. Part I: Theory," *IEEE Transactions on Power Delivery,* vol. 9, no. 1, pp. 162–171, Jan. 1994a.

[B128] Rizk, F. A. M., "Modeling of Lightning Incidence to Tall Structures. Part II: Application," *IEEE Transactions on Power Delivery,* vol. 9, no. 1, pp. 172–193, Jan. 1994b.

[B129] Rizk, F. A. M., "Modeling of Substation Shielding Against Direct Lightning Strikes," *IEEE Transactions on Electromagnetic Compatibility,* vol. 52, no. 3, pp. 664–675, Aug. 2010.

[B130] Rizk, F. A. M., "Modeling of Transmission Line Exposure to Direct Lightning Strokes," *IEEE Transactions on Power Delivery,* vol. 5, no. 4, pp. 1983–1997, Nov. 1990.

[B131] Sargent, M. A., "The Frequency Distribution of Current Magnitudes of Lightning Strokes to Tall Structures," *IEEE Transactions on Power Apparatus and Systems,* vol. 91, no. 5, pp. 2224–2229, 1972.

[B132] Sargent, M. A., "Monte Carlo Simulation of the Lightning Performance of Overhead Shielding Networks of High Voltage Stations," *IEEE Transactions on Power Apparatus and Systems,* vol. 91, no. 4, pp. 1651–1656, 1972.

[B133] Schonland, B. F. J., and D. J. Malan, "Upward Stepped Leaders from the Empire State Building," *Journal of the Franklin Institute,* vol. 258, no. 4, pp. 271–275, Oct. 1954.

[B134] Snyder, R. E., "New Protection System May Eliminate Lightning Damage," *World Oil,* Jan. 1973.

[B135] Sorensen, R. W., and R. C. McMaster, "The Influence of Towers and Conductor Sag on Transmission Line Shielding," *AIEE Transactions,* vol. 61, no. 3, pp. 159–165, 448–450, Mar. 1942.

[B136] Stringfellow, M. F., Lightning incidence in the United Kingdom. Instn. Elect. Engrs. Conf. Pub. No. 108, "Lightning and the Distribution System," pp. 30–40, 1974.

Copyright © 2013 IEEE. All rights reserved.

Copyright The Institute of Electrical and Electronics Engineers, Inc.
Provided by IHS under license with IEEE
No reproduction or networking permitted without license from IHS

Order Number: 02120914
Sold to:EGAT [700166108393] - VARRIS.Y@EGAT.CO.TH,
Not for Resale,2016-09-15 03:57:48 UTC

[B137] Suzuki, T., K. Miyake, and T. Shindo, "Discharge Path Model in Model Test of Lightning Strokes to Tall Mast," *IEEE Transactions on Power Apparatus and Systems,* vol. 100, no. 7, pp. 3553–3562, July 1981.

[B138] Uman, M. A., chapter 1 in *Lightning,* New York: McGraw-Hill, 1969.

[B139] Uman, M. A., D. K. Mclain, R. J. Fisher, and E. P. Krider, "Currents in Florida Lightning Return Strokes," *Journal Geophysical Research,* vol. 78, no. 18, pp. 3530–3537, 1973.

[B140] Uman, M. A., and V. A. Rakov, "A Critical Review of Nonconventional Approaches to Lightning Protection," *Bulletin of the American Meteorological Society,* pp. 1809–1820, Dec. 2002.

[B141] Vendall, G. R., and A. G. Petrie, "The Frequency of Thunderstorm Days in Canada," Meteorological Division, Department of Transportation, Ottawa, Canada, 1962.

[B142] Wagner, C. F., "Lightning Phenomena," in *Electrical Transmission and Distribution Reference Book,* 4th ed. pp. 542–577, East Pittsburgh, PA: Westinghouse Electric Corp., 1964.

[B143] Wagner, C. F., G. D. McCann, and E. Beck, "Field Investigations of Lightning," *AIEE Transactions,* vol. 60, pp. 1222–1230, 1941.

[B144] Wagner C. F., G. D. McCann, and C. M. Lear, "Shielding of Substations," *AIEE Transactions,* vol. 61, no. 2, pp. 96–100, 313, 448, Feb. 1942.

[B145] Wagner, C. F., G. D. McCann, and G. L. MacLane, Jr., "Shielding of Transmission Lines," *AIEE Transactions,* vol. 60, no. 6, pp. 313–328, 612–614, 1941.

[B146] Whitehead, E. R., "CIGRE Survey of the Lightning Performance of Extra-High-Voltage Transmission Lines," *Electra,* no. 33, pp. 63–89, Mar. 1974.

[B147] Whitehead, E. R., "Mechanism of Lightning Flashover," Pub 72-900, EEI Research Project RP 50, Chicago: Illinois Institute of Technology, Feb. 1971.

[B148] Whitehead, E. R., "Protection of Transmission Lines," chapter 22 [49 pages] in Golde, R. H. (Ed.), *Lightning,* vol. 2, London: Academic Press, 1977.

[B149] World Distribution of Thunderstorm Days, Part II, World Meteorological Organization, Geneva, Switzerland, 1956.

[B150] Yokoyama, S., K. Miyake, and T. Suzuki, "Winter Lightning on the Japan Sea Coast—Development of Measuring System on Progressing Feature of Lightning Discharge," *IEEE Transactions on Power Delivery,* vol. 5, No. 3, pp. 1418–1425, July 1990.

[B151] Young, E S., J. M. Clayton, and A. R. Hileman, "Shielding of Transmission Lines," *IEEE Transactions on Power Apparatus and Systems,* vol. S82, pp. 132–154, 1963.

Copyright © 2013 IEEE. All rights reserved.

Copyright The Institute of Electrical and Electronics Engineers, Inc.
Provided by IHS under license with IEEE
No reproduction or networking permitted without license from IHS

Order Number: 02120914
Sold to:EGAT [700166108393] - VARRIS.Y@EGAT.CO.TH,
Not for Resale,2016-09-15 03:57:48 UTC