IEEE STANDARDS ASSOCIATION

# IEEE Guide for Measuring Earth Resistivity, Ground Impedance, and Earth Surface Potentials of a Grounding System

IEEE Power and Energy Society

Sponsored by the
Substations Committee

IEEE
3 Park Avenue
New York, NY 10016-5997
USA

28 December 2012

**IEEE Std 81™-2012**
(Revision of
IEEE Std 81-1983)

--`,,,,,,`,```,,`,`,,`,-`-`,```,,,`---

Copyright The Institute of Electrical and Electronics Engineers, Inc.
Provided by IHS under license with IEEE
No reproduction or networking permitted without license from IHS

Order Number: 02120914
Sold to:EGAT [700166108393] - VARRIS.Y@EGAT.CO.TH,
Not for Resale,2016-09-15 03:57:44 UTC

Copyright The Institute of Electrical and Electronics Engineers, Inc.
Provided by IHS under license with IEEE
No reproduction or networking permitted without license from IHS

Order Number: 02120914
Sold to:EGAT [700166108393] - VARRIS.Y@EGAT.CO.TH,
Not for Resale,2016-09-15 03:57:44 UTC

**IEEE Std 81™-2012**
(Revision of
IEEE Std 81-1983)

# IEEE Guide for Measuring Earth Resistivity, Ground Impedance, and Earth Surface Potentials of a Grounding System

Sponsor

**Substations Committee**
of the
**IEEE Power and Energy Society**

Approved 5 December 2012

**IEEE-SA Standards Board**

Approved 3 October 2014

**American National Standards Institute**

Copyright The Institute of Electrical and Electronics Engineers, Inc.
Provided by IHS under license with IEEE
No reproduction or networking permitted without license from IHS

Order Number: 02120914
Sold to:EGAT [700166108393] - VARRIS.Y@EGAT.CO.TH,
Not for Resale,2016-09-15 03:57:44 UTC

**Abstract:** Practical test methods and techniques are presented for measuring the electrical characteristics of grounding systems. Topics addressed include safety considerations, measuring earth resistivity, measuring the power system frequency resistance or impedance of the ground system to remote earth, measuring the transient or surge impedance of the ground system to remote earth, measuring step and touch voltages, verifying the integrity of the grounding system, reviewing common methods for performing ground testing, reviewing instrumentation characteristics and limitations, and reviewing various factors that can distort test measurements.

**Keywords:** electrical measurements, ground impedance, ground potential rise, ground resistance, ground testing, IEEE 81™, remote earth, soil resistivity

The Institute of Electrical and Electronics Engineers, Inc.
3 Park Avenue, New York, NY 10016-5997, USA

Copyright © 2012 by the Institute of Electrical and Electronics Engineers, Inc.
All rights reserved. Published 28 December 2012. Printed in the United States of America.

National Electrical Safety Code and NESC are registered trademarks in the U.S. Patent & Trademark Office, owned by The Institute of Electrical and Electronics Engineers, Incorporated.

IEEE is a registered trademark in the U.S. Patent & Trademark Office, owned by the Institute of Electrical and Electronics Engineers, Incorporated.

**PDF: ISBN 978-0-7381-8028-1 STD98028**
**Print: ISBN 978-0-7381-8031-1 STDPD98028**

*IEEE prohibits discrimination, harassment and bullying. For more information, visit http://www.ieee.org/web/aboutus/whatis/policies/p9-26.html.*
*No part of this publication may be reproduced in any form, in an electronic retrieval system or otherwise, without the prior written permission of the publisher.*

--`,,,,,,`,```,,``,`,,`,-`-``,```,,,`---

Copyright The Institute of Electrical and Electronics Engineers, Inc.
Provided by IHS under license with IEEE
No reproduction or networking permitted without license from IHS

Order Number: 02120914
Sold to:EGAT [700166108393] - VARRIS.Y@EGAT.CO.TH,
Not for Resale,2016-09-15 03:57:44 UTC

**Notice and Disclaimer of Liability Concerning the Use of IEEE Documents**: IEEE Standards documents are developed within the IEEE Societies and the Standards Coordinating Committees of the IEEE Standards Association (IEEE-SA) Standards Board. IEEE develops its standards through a consensus development process, approved by the American National Standards Institute, which brings together volunteers representing varied viewpoints and interests to achieve the final product. Volunteers are not necessarily members of the Institute and serve without compensation. While IEEE administers the process and establishes rules to promote fairness in the consensus development process, IEEE does not independently evaluate, test, or verify the accuracy of any of the information or the soundness of any judgments contained in its standards.

Use of an IEEE Standard is wholly voluntary. IEEE disclaims liability for any personal injury, property or other damage, of any nature whatsoever, whether special, indirect, consequential, or compensatory, directly or indirectly resulting from the publication, use of, or reliance upon any IEEE Standard document.

IEEE does not warrant or represent the accuracy or content of the material contained in its standards, and expressly disclaims any express or implied warranty, including any implied warranty of merchantability or fitness for a specific purpose, or that the use of the material contained in its standards is free from patent infringement. IEEE Standards documents are supplied "**AS IS**."

The existence of an IEEE Standard does not imply that there are no other ways to produce, test, measure, purchase, market, or provide other goods and services related to the scope of the IEEE standard. Furthermore, the viewpoint expressed at the time a standard is approved and issued is subject to change brought about through developments in the state of the art and comments received from users of the standard. Every IEEE standard is subjected to review at least every ten years. When a document is more than ten years old and has not undergone a revision process, it is reasonable to conclude that its contents, although still of some value, do not wholly reflect the present state of the art. Users are cautioned to check to determine that they have the latest edition of any IEEE standard.

In publishing and making its standards available, IEEE is not suggesting or rendering professional or other services for, or on behalf of, any person or entity. Nor is IEEE undertaking to perform any duty owed by any other person or entity to another. Any person utilizing any IEEE Standards document, should rely upon his or her own independent judgment in the exercise of reasonable care in any given circumstances or, as appropriate, seek the advice of a competent professional in determining the appropriateness of a given IEEE standard.

**Translations**: The IEEE consensus development process involves the review of documents in English only. In the event that an IEEE standard is translated, only the English version published by IEEE should be considered the approved IEEE standard.

**Official Statements**: A statement, written or oral, that is not processed in accordance with the IEEE-SA Standards Board Operations Manual shall not be considered the official position of IEEE or any of its committees and shall not be considered to be, nor be relied upon as, a formal position of IEEE. At lectures, symposia, seminars, or educational courses, an individual presenting information on IEEE standards shall make it clear that his or her views should be considered the personal views of that individual rather than the formal position of IEEE.

**Comments on Standards**: Comments for revision of IEEE Standards documents are welcome from any interested party, regardless of membership affiliation with IEEE. However, IEEE does not provide consulting information or advice pertaining to IEEE Standards documents. Suggestions for changes in documents should be in the form of a proposed change of text, together with appropriate supporting comments. Since IEEE standards represent a consensus of concerned interests, it is important to ensure that any responses to comments and questions also receive the concurrence of a balance of interests. For this reason, IEEE and the members of its societies and Standards Coordinating Committees are not able to provide an instant response to comments or questions except in those cases where the matter has previously been addressed. Any person who would like to participate in evaluating comments or revisions to an IEEE standard is welcome to join the relevant IEEE working group at http://standards.ieee.org/develop/wg/.

Comments on standards should be submitted to the following address:

Secretary, IEEE-SA Standards Board
445 Hoes Lane
Piscataway, NJ 08854-4141
USA

**Photocopies**: Authorization to photocopy portions of any individual standard for internal or personal use is granted by The Institute of Electrical and Electronics Engineers, Inc., provided that the appropriate fee is paid to Copyright Clearance Center. To arrange for payment of licensing fee, please contact Copyright Clearance Center, Customer Service, 222 Rosewood Drive, Danvers, MA 01923 USA; +1 978 750 8400. Permission to photocopy portions of any individual standard for educational classroom use can also be obtained through the Copyright Clearance Center.

--`,,,,,,`,```,,`,`,,`,-`-`,,`,,,`---

Copyright The Institute of Electrical and Electronics Engineers, Inc.
Provided by IHS under license with IEEE
No reproduction or networking permitted without license from IHS

Order Number: 02120914
Sold to:EGAT [700166108393] - VARRIS.Y@EGAT.CO.TH,
Not for Resale,2016-09-15 03:57:44 UTC

## Notice to users

## Laws and regulations

Users of IEEE Standards documents should consult all applicable laws and regulations. Compliance with the provisions of any IEEE Standards document does not imply compliance to any applicable regulatory requirements. Implementers of the standard are responsible for observing or referring to the applicable regulatory requirements. IEEE does not, by the publication of its standards, intend to urge action that is not in compliance with applicable laws, and these documents may not be construed as doing so.

## Copyrights

This document is copyrighted by the IEEE. It is made available for a wide variety of both public and private uses. These include both use, by reference, in laws and regulations, and use in private self-regulation, standardization, and the promotion of engineering practices and methods. By making this document available for use and adoption by public authorities and private users, the IEEE does not waive any rights in copyright to this document.

## Updating of IEEE documents

Users of IEEE Standards documents should be aware that these documents may be superseded at any time by the issuance of new editions or may be amended from time to time through the issuance of amendments, corrigenda, or errata. An official IEEE document at any point in time consists of the current edition of the document together with any amendments, corrigenda, or errata then in effect. In order to determine whether a given document is the current edition and whether it has been amended through the issuance of amendments, corrigenda, or errata, visit the IEEE-SA Website at http://standards.ieee.org/index.html or contact the IEEE at the address listed previously. For more information about the IEEE Standards Association or the IEEE standards development process, visit the IEEE-SA Website at http://standards.ieee.org/index.html.

## Errata

Errata, if any, for this and all other standards can be accessed at the following URL: http://standards.ieee.org/findstds/errata/index.html. Users are encouraged to check this URL for errata periodically.


Copyright © 2012 IEEE. All rights reserved.

Copyright The Institute of Electrical and Electronics Engineers, Inc.
Provided by IHS under license with IEEE
No reproduction or networking permitted without license from IHS

Order Number: 02120914
Sold to:EGAT [700166108393] - VARRIS.Y@EGAT.CO.TH,
Not for Resale,2016-09-15 03:57:44 UTC

## Patents

Attention is called to the possibility that implementation of this standard may require use of subject matter covered by patent rights. By publication of this standard, no position is taken by the IEEE with respect to the existence or validity of any patent rights in connection therewith. If a patent holder or patent applicant has filed a statement of assurance via an Accepted Letter of Assurance, then the statement is listed on the IEEE-SA Website http://standards.ieee.org/about/sasb/patcom/patents.html. Letters of Assurance may indicate whether the Submitter is willing or unwilling to grant licenses under patent rights without compensation or under reasonable rates, with reasonable terms and conditions that are demonstrably free of any unfair discrimination to applicants desiring to obtain such licenses.

Essential Patent Claims may exist for which a Letter of Assurance has not been received. The IEEE is not responsible for identifying Essential Patent Claims for which a license may be required, for conducting inquiries into the legal validity or scope of Patents Claims, or determining whether any licensing terms or conditions provided in connection with submission of a Letter of Assurance, if any, or in any licensing agreements are reasonable or non-discriminatory. Users of this standard are expressly advised that determination of the validity of any patent rights, and the risk of infringement of such rights, is entirely their own responsibility. Further information may be obtained from the IEEE Standards Association.


Copyright © 2012 IEEE. All rights reserved.

Copyright The Institute of Electrical and Electronics Engineers, Inc.
Provided by IHS under license with IEEE
No reproduction or networking permitted without license from IHS

Order Number: 02120914
Sold to:EGAT [700166108393] - VARRIS.Y@EGAT.CO.TH,
Not for Resale,2016-09-15 03:57:44 UTC

## Participants

At the time this guide was submitted to the IEEE-SA Standards Board for approval, the Measuring Earth Resistivity, Ground Impedance, and Earth Surface Potentials of a Grounding System Working Group had the following membership:

**Dennis DeCosta**, *Chair*
**Robert Brown**, *Vice Chair*
**William Sheh**, *Secretary*

Hanna Abdallah
Stan Arnot
Thomas Barnes
Bryan Beske
Dale Boling
Steven Brown
K. S. Chan
Koushik Chanda
E. Peter Dick
Marcia Eblen
Gary Engmann
D. Lane Garrett
Steven Greenfield
Martin Havelka
Jeffrey Jowett
Richard Keil
Dave Kelley
Donald Laird
Henri Lemeilleur
Allen Love
Sakis Meliopoulos
Mike Noori
Robert Nowell
Shashi Patel
Jesse Rorabaugh
Hamid Sharifnia
Douglas Smith
Curtis Stidham
Brian Story
Alexander Wong

The following members of the individual balloting committee voted on this guide. Balloters may have voted for approval, disapproval, or abstention.

Hanna Abdallah
William Ackerman
Michael Adams
Ali Al Awazi
Stan Arnot
Michael Baldwin
Thomas Barnes
Robert Barnett
G. Bartok
Earle Bascom III
George Becker
W. J. (Bill) Bergman
Bryan Beske
Steven Bezner
Wallace Binder
Dale Boling
Dieter Braun
Jeffrey Britton
Derek Brown
Steven Brown
William Bush
Mark Bushnell
William Byrd
Thomas Callsen
Michael Champagne
Koushik Chanda
Robert Christman
Randy Clelland
Bryan Cole
Jerry Corkran
Alireza Daneshpooy
Glenn Davis
Dennis DeCosta
Gary Donner
Douglas Dorr
Donald Dunn
Marcia Eblen
Michael Edds
Gary Engmann
Brian Erga
C. Erven
Rabiz Foda
Marcel Fortin
Fredric Friend
D. Lane Garrett
George Gela
Frank Gerleve
David Giegel
David Gilmer
Jalal Gohari
Edwin Goodwin
James Graham
Joseph Gravelle
Steven Greenfield
Randall Groves
Bal Gupta
Ajit Gwal
David Harris
Martin Havelka
Lee Herron
Gary Heuston
Scott Hietpas
Raymond Hill
Robert Hoerauf
Ronald Hotchkiss
R. Jackson
Joseph Jancauskas
Jeffrey Jowett
Richard Keil
Chad Kennedy
Gael Kennedy
Yuri Khersonsky
Chad Kiger
James Kinney
Hermann Koch
Joseph L. Koepfinger
Jim Kulchisky
Saumen Kundu
Donald Laird
Chung-Yiu Lam
Benjamin Lanz
Thomas La Rose
Michael Lauxman
Albert Livshitz
Debra Longtin
Greg Luri
Jinxi Ma
Jorge Marquez
John Mcalhaney, Jr.
William McBride
Edward McCall
William McCoy
Nigel McQuin
Daleep Mohla
Georges Montillet
Adi Mulawarman
Jerry Murphy
Arun Narang
Dennis Neitzel


Copyright © 2012 IEEE. All rights reserved.

Copyright The Institute of Electrical and Electronics Engineers, Inc.
Provided by IHS under license with IEEE
No reproduction or networking permitted without license from IHS

Order Number: 02120914
Sold to:EGAT [700166108393] - VARRIS.Y@EGAT.CO.TH,
Not for Resale,2016-09-15 03:57:44 UTC

Arthur Neubauer
Michael S. Newman
Nick S. A. Nikjoo
Robert Nowell
Lorraine Padden
Donald Parker
Bansi Patel
Shashi Patel
Donald Platts
Percy Pool
Reynaldo Ramos
Johannes Rickmann
Michael Roberts
Charles Rogers
Jesse Rorabaugh
Thomas Rozek
Steven Sano
Bartien Sayogo
Dennis Schlender
Robert Seitz
Devki Sharma
William Sheh
Gil Shultz
Douglas Smith
James Smith
Jerry Smith
Gary Stoedter
Brian Story
Allan St. Peter
William Taylor
David Tepen
John Toth
Jonathan Tucker
John Vergis
Keith Wallace
S. Frank Waterer
Yingli Wen
Donald Wengerter
Kenneth White
James Wilson
Alexander Wong
Larry Yonce
Larry Young
Jian Yu
Luis Zambrano
Matthew Zeedyk

When the IEEE-SA Standards Board approved this standard on 5 December 2012, it had the following membership:

**Richard H. Hulett**, *Chair*
**John Kulick**, *Vice Chair*
**Robert Grow**, *Past Chair*
**Konstantinos Karachalios**, *Secretary*

Satish Aggarwal
Masayuki Ariyoshi
Peter Balma
William Bartley
Ted Burse
Clint Chaplin
Wael Diab
Jean-Philippe Faure
Alexander Gelman
Paul Houzé
Jim Hughes
Young Kyun Kim
Joseph L. Koepfinger*
David J. Law
Thomas Lee
Hung Ling
Oleg Logvinov
Ted Olsen
Gary Robinson
Jon Walter Rosdahl
Mike Seavey
Yatin Trivedi
Phil Winston
Yu Yuan

*Member Emeritus

Also included are the following nonvoting IEEE-SA Standards Board liaisons:

Richard DeBlasio, *DOE Representative*
Michael Janezic, *NIST Representative*

Catherine Berger
*IEEE Standards Program Manager, Document Development*

Soo H. Kim
*IEEE Client Services Manager, Professional Services*


Copyright © 2012 IEEE. All rights reserved.

Copyright The Institute of Electrical and Electronics Engineers, Inc.
Provided by IHS under license with IEEE
No reproduction or networking permitted without license from IHS

Order Number: 02120914
Sold to:EGAT [700166108393] - VARRIS.Y@EGAT.CO.TH,
Not for Resale,2016-09-15 03:57:44 UTC

## Introduction

This introduction is not part of IEEE Std 81-2012, IEEE Guide for Measuring Earth Resistivity, Ground Impedance, and Earth Surface Potentials of a Grounding System.

IEEE Std 81™-1983 [B36][a] was prepared by the Power System Instrumentation and Measurement Committee of the IEEE Power and Energy Society. The guide was intended to cover the majority of field measurements that did not require special, high-precision equipment and did not address unusual difficulties that can occur in large grounding systems, abnormally high stray alternating currents (ac) or direct currents (dc), and so on. In 1991, IEEE Std 81 was reaffirmed and IEEE Std 81.2-1991 [B37] was released to cover the measurement of very low impedances (less than 1 ohm) along with specialized instrumentation, measurement techniques, and safety considerations.

After nearly two decades of inactivity, the Substation Committee of the IEEE Power and Energy Society determined that IEEE Std 81-1983 and IEEE Std 81.2-1991 contained subject matter that is very relevant for applications in electric utility facilities, but the standards needed to be updated. A working group was formed to combine both standards into a singular document that included updated instrumentation, techniques, and information. This document represents the efforts of that working group.

[a] The numbers in brackets correspond to those of the bibliography in Annex F.


Copyright © 2012 IEEE. All rights reserved.

Copyright The Institute of Electrical and Electronics Engineers, Inc.
Provided by IHS under license with IEEE
No reproduction or networking permitted without license from IHS

Order Number: 02120914
Sold to:EGAT [700166108393] - VARRIS.Y@EGAT.CO.TH,
Not for Resale,2016-09-15 03:57:44 UTC

## Contents

1. Overview ..... 1
1.1 Scope ..... 1
1.2 Purpose ..... 2

2. Normative references ..... 2

3. Definitions ..... 2

4. Test objectives ..... 4
4.1 Earth resistivity measurements ..... 4
4.2 Impedance and potential gradient measurements ..... 4

5. Safety precautions while making ground tests ..... 4
5.1 Ground electrode tests ..... 4
5.2 Surge arrester ground continuity tests ..... 5
5.3 Neutral and shield wire ground tests ..... 5
5.4 Equipment neutral ground test ..... 5

6. General considerations on the problems related to measurement ..... 5
6.1 Complexities ..... 5
6.2 Test electrodes ..... 6
6.3 Stray direct currents ..... 7
6.4 Stray alternating currents ..... 7
6.5 Reactive component of impedance of a large grounding system ..... 7
6.6 Coupling between test leads ..... 8
6.7 Buried metallic objects ..... 8

7. Earth resistivity ..... 8
7.1 General ..... 8
7.2 Methods of measuring earth resistivity ..... 11
7.3 Interpretation of measurements ..... 14
7.4 Guidance on performing field measurements ..... 18

8. Ground impedance ..... 19
8.1 General ..... 19
8.2 Methods of measuring ground impedance ..... 21

9. Testing earth potentials and step and touch voltages ..... 30
9.1 Purpose ..... 30
9.2 Types of step and touch voltages ..... 31
9.3 Measurement procedure (general) ..... 32
9.4 Methods of measuring step, touch, and transfer voltages ..... 32
9.5 Measurement issues ..... 36

10. Integrity of grounding systems ..... 37
10.1 General ..... 37
10.2 High-current test method ..... 37
10.3 Measurement of resistance between two risers ..... 39
10.4 Low-impedance continuity measurement by computer-based grounding multimeter ..... 39

11. Current splits ..... 40
11.1 Introduction ..... 40
11.2 Test considerations ..... 41


Copyright © 2012 IEEE. All rights reserved.

Copyright The Institute of Electrical and Electronics Engineers, Inc.
Provided by IHS under license with IEEE
No reproduction or networking permitted without license from IHS

Order Number: 02120914
Sold to:EGAT [700166108393] - VARRIS.Y@EGAT.CO.TH,
Not for Resale,2016-09-15 03:57:44 UTC

12. Transient impedance of grounding system ..... 41
12.1 General ..... 41
12.2 Measurement using mobile impulse generator (Georgia Institute of Technology [B29]) ..... 42
12.3 Measurement using a broadband meter (Georgia Institute of Technology [B29]) ..... 45
12.4 Instrumentation ..... 46

Annex A (informative) Nonuniform soils ..... 48

Annex B (informative) Determination of an earth model ..... 50

Annex C (informative) Theory of the fall-of-potential method ..... 53

Annex D (informative) Surface material resistivity ..... 56

Annex E (informative) Instrumentation ..... 65

Annex F (informative) Bibliography ..... 71


Copyright © 2012 IEEE. All rights reserved.

Copyright The Institute of Electrical and Electronics Engineers, Inc.
Provided by IHS under license with IEEE
No reproduction or networking permitted without license from IHS

Order Number: 02120914
Sold to:EGAT [700166108393] - VARRIS.Y@EGAT.CO.TH,
Not for Resale,2016-09-15 03:57:44 UTC

# IEEE Guide for Measuring Earth Resistivity, Ground Impedance, and Earth Surface Potentials of a Grounding System

***IMPORTANT NOTICE: IEEE Standards documents are not intended to ensure safety, health, or environmental protection, or ensure against interference with or from other devices or networks. Implementers of IEEE Standards documents are responsible for determining and complying with all appropriate safety, security, environmental, health, and interference protection practices and all applicable laws and regulations.***

***This IEEE document is made available for use subject to important notices and legal disclaimers. These notices and disclaimers appear in all publications containing this document and may be found under the heading "Important Notice" or "Important Notices and Disclaimers Concerning IEEE Documents." They can also be obtained on request from IEEE or viewed at http://standards.ieee.org/IPR/disclaimers.html.***

## 1. Overview

### 1.1 Scope

The test methods and techniques used to measure the electrical characteristics of the grounding system include the following topics:

a) Establishing safe testing conditions
b) Measuring earth resistivity
c) Measuring the power system frequency resistance or impedance of the ground system to remote earth
d) Measuring the transient (surge) impedance of the ground system to remote earth
e) Measuring step and touch voltages
f) Verifying the integrity of the grounding system
g) Reviewing common methods and procedures for performing ground testing
h) Reviewing instrumentation characteristics and limitations
i) Reviewing various factors that can distort test measurements


Copyright © 2012 IEEE. All rights reserved.

Copyright The Institute of Electrical and Electronics Engineers, Inc.
Provided by IHS under license with IEEE
No reproduction or networking permitted without license from IHS

Order Number: 02120914
Sold to:EGAT [700166108393] - VARRIS.Y@EGAT.CO.TH,
Not for Resale,2016-09-15 03:57:44 UTC

### 1.2 Purpose

The purpose of this guide is to present practical instrumentation methods that may be used for measuring soil resistivity, the impedance to remote earth, step and touch voltages, and current distributions in ground grids associated with electric utility facilities. These grids typically consist of interconnected grounding systems ranging in complexity from a few ground rods to large grids with many ground rods or wells, buried conductors, and external ground connections. External ground connections may include overhead shield/ground/neutral wires, underground cable sheaths/neutrals, counterpoises, grid tie conductors, metallic pipes, and other connections that provide additional paths to remote earth.

This guide is intended to assist the engineer or technician in obtaining and interpreting accurate, reliable data. The factors that influence the choice of instruments are discussed along with a presentation of field techniques for various types of measurements. These factors include the purpose of the measurement, the accuracy required, the types of instruments available, the possible sources of error, and the nature of the ground or grounding system under test. It also describes test procedures that promote the safety of personnel and property, and it seeks to minimize operating interferences with neighboring facilities.

## 2. Normative references

The following referenced document is indispensable for the application of this document (i.e., it must be understood and used, so each referenced document is cited in text and its relationship to this document is explained). For dated references, only the edition cited applies. For undated references, the latest edition of the referenced document (including any amendments or corrigenda) applies.

IEEE Std 80™, IEEE Guide for Safety in AC Substation Grounding.[1,2]

## 3. Definitions

For the purposes of this document, the following terms and definitions apply. The *IEEE Standards Dictionary Online* should be consulted for terms not defined in this clause.[3]

**apparent soil resistivity:** The equivalent, overall resistivity of a volume of soil with varying properties.

**bonding:** The electrical interconnecting of conductive parts, designed to maintain a common electrical potential.

**counterpoise (overhead lines) (lightning protection):** A conductor or system of conductors, typically arranged beneath a transmission or distribution line, located most frequently below the surface of the earth and connected to the grounding system of towers or poles supporting the line.

**coupling:** The association of two or more circuits or systems in such a way that power or signal information is transferred from one to another.

**electric potential difference:** The potential energy per unit charge between two points in an electric field.

**equipotential line or contour:** The locus of points having the same potential at a given time.

**ground:** A conducting connection, whether intentional or accidental, by which an electric circuit or equipment is connected to the earth, or to some conducting body of relatively large extent that serves in place of the earth.

[1] The IEEE standards or products referred to in this clause are trademarks of The Institute of Electrical and Electronics Engineers, Inc.
[2] IEEE publications are available from The Institute of Electrical and Electronics Engineers (http://standards.ieee.org/).
[3] The *IEEE Standards Dictionary Online* subscription is available at http://www.ieee.org/portal/innovate/products/standard/standards_dictionary.html.


Copyright © 2012 IEEE. All rights reserved.

Copyright The Institute of Electrical and Electronics Engineers, Inc.
Provided by IHS under license with IEEE
No reproduction or networking permitted without license from IHS

Order Number: 02120914
Sold to:EGAT [700166108393] - VARRIS.Y@EGAT.CO.TH,
Not for Resale,2016-09-15 03:57:44 UTC

**ground current:** A current flowing into or out of the earth or its equivalent serving as a ground.

**ground electrode:** A conductor embedded in the earth and used for collecting ground current from or dissipating ground current into the earth.

**ground grid:** A system of interconnected ground electrodes arranged in a pattern over a specified area and buried below the surface of the earth.

**ground impedance:** The vector sum of resistance and reactance between a ground electrode, grid or system and remote earth.

**ground potential rise (GPR):** The maximum electrical potential that a ground electrode, grid, or system might attain relative to a distant grounding point assumed to be at the potential of remote earth.

NOTE—Under normal conditions, the grounded electrical equipment operates at near zero ground potential. That is, the potential of a grounded neutral conductor is nearly identical to the potential of remote earth. During a ground fault the portion of fault current that is conducted by the ground grid into the earth causes the rise of the grid potential with respect to remote earth.[4]

**ground resistance:** The impedance, excluding reactance, between a ground electrode, grid or system and remote earth. Note that some sections of this guide refer to ground impedance as ground resistance if the reactive portion of the impedance is deemed negligible.

**ground return circuit:** A circuit in which the earth or an equivalent conducting body is used to complete the circuit and allow current circulation to or from its current source.

**grounded:** A system, circuit, or apparatus provided with a ground(s) for the purposes of establishing a ground return circuit and for maintaining its potential at approximately the potential of earth.

**grounding system:** Comprises all interconnected grounding facilities in a specific area.

**mutual resistance of grounding electrodes:** Equal to the voltage change in one electrode produced by a change of current in another electrode and is expressed in ohms.

**potential profile:** A plot of potential as a function of distance along a specified path.

**remote earth:** A theoretical concept that refers to a ground electrode of zero impedance placed an infinite distance away from the ground under test. In practice, remote earth is approached when the mutual resistance between the ground under test and the test electrode becomes negligible. Remote earth is normally considered to be at zero potential.

**soil (earth) resistivity:** A measure of how much a volume of soil will resist an electric current and is usually expressed in ohm-meters.

**step voltage:** The difference in surface potential that could be experienced by a person bridging a distance of 1 meter with the feet without contacting any grounded object.

**surface-potential gradient:** The slope of a potential profile, the path of which intersects equipotential lines at right angles.

**touch voltage:** The potential difference between the ground potential rise (GPR) of a grounding grid or system and the surface potential where a person could be standing while at the same time having a hand in contact with a grounded structure or object. Touch voltage measurements can be “open circuit” (without the equivalent body resistance included in the measurement circuit) or “closed circuit” (with the equivalent body resistance included in the measurement circuit).

**transferred voltage:** A special case of touch voltage where a voltage is transferred into or out of the vicinity of a ground electrode from or to a remote point external to the ground electrode.

[4] Notes in text, tables, and figures of a standard are given for information only and do not contain requirements needed to implement this standard.


Copyright © 2012 IEEE. All rights reserved.

Copyright The Institute of Electrical and Electronics Engineers, Inc.
Provided by IHS under license with IEEE
No reproduction or networking permitted without license from IHS

Order Number: 02120914
Sold to:EGAT [700166108393] - VARRIS.Y@EGAT.CO.TH,
Not for Resale,2016-09-15 03:57:44 UTC

# 4. Test objectives

## 4.1 Earth resistivity measurements

Earth resistivity measurements are used to perform the following:

a) Estimate the ground impedance of a grounding system
b) Estimate potential gradients including step and touch voltages
c) Compute the inductive coupling between neighboring power and communication circuits
d) Design cathodic protection systems
e) Design alternating current (ac) mitigation for coupling between transmission lines and pipelines
f) Conduct geological surveys

## 4.2 Impedance and potential gradient measurements

Measurement of ground resistance or impedance and potential gradients on the surface of the earth due to ground currents are used to perform the following:

a) Verify the adequacy of a new grounding system
b) Detect changes in an existing grounding system
c) Identify hazardous step and touch voltages
d) Determine GPR to design protection for power and communication circuits

# 5. Safety precautions while making ground tests

## 5.1 Ground electrode tests

**WARNING**

A lethal voltage can exist between the ground electrode under test and a remote ground.

A lethal voltage can exist between the ground electrode under test and a remote ground during routine conditions or if a power-system fault involving the station ground occurs while ground tests are being conducted. The ground potential rise can be in the order of several thousand volts. Step and touch voltages around the ground electrode under test, test equipment, and remote grounds can also be lethal.

A test plan is typically developed and reviewed with applicable test personnel. Appropriate safety rules need to be followed.

Since the current and potential electrodes are located at points that represent remote earth, the leads to these electrodes are treated as though a possible voltage could exist between the test leads and any point on the station ground grid. The main area of concern involves system faults or lightning strikes, which can cause voltages as high as several thousand volts to occur between station ground and remote points. It is also important to understand that the test signal injected into a remote current electrode can also result in significant touch voltages. The following precautions can reduce these hazards although other precautions might also be necessary:

a) Hands or other parts of the body are not allowed to complete the circuit between points of possible high-potential difference. Gloves and dielectrically rated footwear can reduce the hazards associated with handling test leads that extend outside the station ground grid.


Copyright © 2012 IEEE. All rights reserved.

Copyright The Institute of Electrical and Electronics Engineers, Inc.
Provided by IHS under license with IEEE
No reproduction or networking permitted without license from IHS

Order Number: 02120914
Sold to:EGAT [700166108393] - VARRIS.Y@EGAT.CO.TH,
Not for Resale,2016-09-15 03:57:44 UTC

b) Exposed test leads and electrodes are isolated from workers and the general public prior to applying test voltages. Exposed test leads and electrodes are also isolated from workers and the public prior to connecting the leads to a station ground grid or other grounding systems that might be exposed to system ground fault currents.

c) A signal is applied for short test periods, and all test leads are promptly removed after the test is completed.

d) If remote current and potential probes are not within sight of test personnel or if the test leads are located in an area accessible to the public, then these points are under continuous observation using a spotter in radio contact with the test equipment operator as long as the test signal is applied or remote potentials are over 50 V. One or more test leads that are electrically connected to a ground grid can cause a transfer of potential under fault conditions that would far exceed 50 V, and a spotter would be necessary as long as the test leads are connected to the ground grid.

e) If the ungrounded ends of test leads parallel an energized line for several hundred feet, then a hazardous voltage can be induced into the test leads if large currents are flowing in the energized line. This issue can sometimes be mitigated by the physical orientation of test leads, grounding, or both.

### 5.2 Surge arrester ground continuity tests

Surge arrester ground continuity tests require special care for the following reasons:

a) The base of the surge arrester can approach line potential if the ground lead is disconnected while the primary terminal remains energized. Never disconnect the ground of a surge arrester for any reason while the primary terminal remains connected to an energized line.

b) Extremely high, short-duration lightning or switching currents can be discharged into the ground and can exceed 50 000 A.

c) A system fault can occur if a surge arrester fails during testing.

Surge-arrester ground leads can be tested as long as sufficient safety precautions are implemented.

### 5.3 Neutral and shield wire ground tests

Disconnecting neutral and shield wires can generate hazardous voltages. This hazard can occur whether the line is energized or not, due to current flow through the interconnected shield wires, or mutual coupling with other energized circuits. Appropriate work procedures can mitigate these hazards.

### 5.4 Equipment neutral ground test

High voltages can occur and possibly harm personnel and/or damage equipment, if neutrals are disconnected from energized equipment.

## 6. General considerations on the problems related to measurement

### 6.1 Complexities

The measurements of soil resistivities, ground impedances, and potential gradients of the earth introduce a number of complexities not encountered in other resistance, impedance, and potential measurements. In some situations, it might be necessary to perform several measurements to plot trends and analyze the situation. Stray currents and other factors can interfere with the measurements.


Copyright © 2012 IEEE. All rights reserved.

Copyright The Institute of Electrical and Electronics Engineers, Inc.
Provided by IHS under license with IEEE
No reproduction or networking permitted without license from IHS

Order Number: 02120914
Sold to:EGAT [700166108393] - VARRIS.Y@EGAT.CO.TH,
Not for Resale,2016-09-15 03:57:44 UTC

With development and industrial growth adjacent to power substations, choosing a suitable pattern or location for test probes to make a resistance test is becoming increasingly difficult. The connection of overhead ground wires, buried water pipes, cable sheaths, adjacent railroad tracks, conveyor systems, and so on, can all have an effect on the electrical circuit being tested and can introduce significant errors. It should also be noted that overhead ground wires might be insulated either deliberately or by poor connections, and therefore, low-voltage tests might give answers different from actual fault tests.

To improve the accuracy of the measurement for comparison with calculated values, ground impedance measurements can be performed prior to interconnection of external shield wires, metallic pipes, and other external interferences.

The impedance of a ground grid will usually decrease slightly as the earth settles to a uniform compactness a year or more after installation.

## 6.2 Test electrodes

Several ground-impedance measurement methods described in Clause 7 through Clause 12 require the use of current and voltage test electrodes.

The impedance of the test electrodes can have a significant effect on the accuracy of impedance measurements. If a ground test is performed using the two-point test method, the measurement error can be minimized if the impedance of the test electrode is negligible with respect to the ground being tested. Conversely, for the three-point test method, the measurement error can be minimized if the impedance of the test electrode is similar in magnitude to the impedance of the ground under test.

Obviously, these restrictions limit the use of such methods to grounds of relatively small extent such as residential swimming pools, pole grounds, and small, low-voltage distribution substation grounds.

In the case of impedance measurements using the fall-of-potential method, the requirements of the test electrodes are not as critical.

Test instruments need sufficient current flowing in the test circuit to obtain accurate test measurements and reliable test results. An awareness of the test circuit is therefore necessary because it is possible for the test equipment to produce insufficient test current if the resistance of the test electrode is too high. Insufficient test current is defined as follows:

a) Current lower than the instrument sensitivity
b) Current in the order of magnitude of the stray currents in the earth
c) Or both a) and b)

In case a), the only corrective action available at the site of measurement is to increase the test current. This can be done by either increasing the voltage of the power supply or by decreasing the resistances of the electrodes involved in the current circuit. Increasing the power supply voltage might not be an option due to limitations in the measuring instrument. If an instrument with higher voltage is used, care must be taken to avoid dangerous potentials on the electrodes and test leads. Most test instruments supply a voltage of 50 V or less.

**WARNING**

If the test voltage exceeds 50 V, there is a shock hazard if anyone touches an energized conductor. Appropriate personnel protective equipment is typically used by test personnel and adequate measures implemented to protect the public from being exposed to a potentially hazardous situation.


Copyright © 2012 IEEE. All rights reserved.

Copyright The Institute of Electrical and Electronics Engineers, Inc.
Provided by IHS under license with IEEE
No reproduction or networking permitted without license from IHS

Order Number: 02120914
Sold to:EGAT [700166108393] - VARRIS.Y@EGAT.CO.TH,
Not for Resale,2016-09-15 03:57:44 UTC

Often, the most effective way of increasing the test current is to decrease the current electrode resistance. The resistance of the test electrode can be reduced by driving the rod deeper into the soil, pouring water around the rod, or driving additional rods and interconnecting them in parallel. The addition of salt to the water poured around the test electrodes is of very little value; the moisture is the main requirement. If a current electrode is made up of parallel ground rods, then adequate spacing (not closer than the below-grade length of the current electrode) between the ground rods will minimize the impact of mutual resistances.

The maximum resistance values of the current and potential electrodes will depend on the type of instrument used.

If stray currents are present when direct current (dc) tests are being performed, the interference can be mitigated by setting the test current to a value significantly above the stray dc earth currents. When tests with ac or periodically reversed dc signals are being performed, the interference can be mitigated by setting the frequency of the test signal to a frequency not present in the stray currents or use a random noise signal.

A potential probe with high resistance to remote earth can also influence the voltage measured by the instrument. If this resistance is of the same order of magnitude as the input impedance of the instrument, then the actual voltage will be divided between the measured voltage and the voltage across the resistance of the potential electrode. In cases with low soil resistivities, the error caused by this influence is insignificant, but in the case of sandy or rocky soil environment, the user might consider reducing the resistance of the electrode to reduce this error. Otherwise, if this influence prevails, then the indicated resistance will be less than the actual resistance.

## 6.3 Stray direct currents

Conduction of electricity in the soil is electrolytic, and direct current results in chemical reactions and potential differences. Direct potentials are produced between various types of soil and between soil and metal by galvanic action. Cathodic protection systems of pipelines, dc railroad tracks, and dc transmission lines are some of the major sources of dc currents in the soil. Galvanic potentials, polarization, and stray direct currents can seriously interfere with direct-current measurements. Therefore, periodically reversed direct current or sometimes a regularly pulsed current is used in making measurements. However, when using periodically reversed direct current for resistance measurements, the resulting values will be fairly close, but they might not be accurate for alternating-current applications. Solar-induced currents, which can be quasi-dc, might influence test results.

## 6.4 Stray alternating currents

Stray alternating currents in the earth, in the grounding system under test, and in the test electrodes present an additional complication. The effects of stray alternating current can be mitigated in ground resistance measurements by utilizing a frequency that is not present in the stray current or by using a random noise signal. Most measuring devices use frequencies within a range of 50 Hz to 3400 Hz. The use of filters or narrow band measuring instruments, or both, is often required to overcome the effects of stray alternating currents.

## 6.5 Reactive component of impedance of a large grounding system

The impedance of a large grounding system can be low (less than 1 Ω), but it could have a significant reactive component (Harrison [B34][5]). Certain precautions are necessary when measuring the power frequency (usually either 50 Hz or 60 Hz) impedance of a large grounding system. For such

[5] The numbers in brackets correspond to those of the bibliography in Annex F.


Copyright © 2012 IEEE. All rights reserved.

Copyright The Institute of Electrical and Electronics Engineers, Inc.
Provided by IHS under license with IEEE
No reproduction or networking permitted without license from IHS

Order Number: 02120914
Sold to:EGAT [700166108393] - VARRIS.Y@EGAT.CO.TH,
Not for Resale,2016-09-15 03:57:44 UTC

measurements, the test devices are operated at a test frequency that is slightly above or below the power system frequency to obtain more accurate measurements.

### 6.6 Coupling between test leads

Inductive coupling can occur between components of two or more ac circuits by means of the mutual inductance that associates the two circuits. The coupling effect between test leads becomes important when measuring low values of ground impedance. Any voltage produced in the potential lead due to coupling from current flowing in the current lead is directly added to the true voltage and produces a measurement error. The 50 Hz or 60 Hz inductive coupling between two parallel test leads might be as high as 0.1 Ω/100 m. As a result, the error can be appreciable because low ground impedance usually occurs in ground grids that cover large areas, and long test leads are typically required to reach remote earth. Thus, the coupling between test leads can introduce large errors when a ground grid covering a large area has a relatively low impedance.

Conversely, a ground grid that covers a small area usually has a relatively high ground impedance, which allows shorter test leads to reach remote earth. Thus, the effects of coupling can be expected to be worse on measurements of large-area, low-impedance grounds. As a rule of thumb, test lead coupling is usually negligible on measurements of grounds that are 10 Ω or greater, is almost always important on measurements of 1 Ω or less, and can be significant in the range between 1 Ω and 10 Ω.

Test lead coupling can be minimized by appropriately routing the potential and current leads. When test lead coupling is anticipated, appropriate routing may include separating the leads or crossing the leads at 90°.

### 6.7 Buried metallic objects

Partially or completely buried objects, such as rails and metallic pipelines, located in the vicinity of the ground being tested, will have considerable influence on test results (Dawalibi and Mukhedkar [B23], Rudenberg [B55]). Earth potential contours are distorted and gradients are increased when measured above buried metallic objects.

Whenever the presence of buried metallic structures is suspected in the area where soil resistivity measurements are to be performed and the location of these structures is known, the influence of these structures on the soil resistivity measurement results can be minimized by aligning the test probes in a direction perpendicular to the routing of these structures. Locate test probes as far as possible from buried structures.

## 7. Earth resistivity

### 7.1 General

The techniques for measuring soil resistivity are essentially the same for most measurements. However, the interpretation of the recorded data can vary considerably, especially where soils with nonuniform resistivities are encountered. The added complexity caused by nonuniform soils is common, and in only a few cases, the soil resistivities are constant with increasing depth.

Earth resistivity varies not only with the type of soil but also with temperature, moisture, mineral content, and compactness (Figure 1). The literature indicates that the values of earth resistivity vary from less than 1 Ω-m for sea water up to $10^9$ Ω-m for sandstone. The resistivity of the earth increases slowly with decreasing temperatures from 25 °C to 0 °C. Below 0 °C, the resistivity increases rapidly. In frozen soil, as in the surface layer of soil in winter, the resistivity can be exceptionally high.


Copyright © 2012 IEEE. All rights reserved.

Copyright The Institute of Electrical and Electronics Engineers, Inc.
Provided by IHS under license with IEEE
No reproduction or networking permitted without license from IHS

Order Number: 02120914
Sold to:EGAT [700166108393] - VARRIS.Y@EGAT.CO.TH,
Not for Resale,2016-09-15 03:57:44 UTC

Table 1 shows the resistivity values for various soils and rocks. More detailed tables are available in IEEE Std 80[6] (Rudenberg [B55], Thug [B60]).

Usually there are several layers of soil, each having a different resistivity. Lateral changes can also occur, but in general, these changes are gradual and negligible in the vicinity of the sites concerned.

In most cases, the measurement will show that the resistivity $\rho_a$ is mainly a function of depth *z*. For purposes of illustration, we will assume that this function can be written as follows:

$$\rho_a = \phi(z) \tag{1}$$

The nature of the function $\phi$ is in general not simple, and consequently, the interpretation of the measurements will consist of establishing a simple equivalent function $\phi_{\mathrm{e}}$, which will give the best approximation. In the case of power and communication circuits, a two horizontal layer configuration (IEEE Std 80, Dawalibi and Mukhedkar [B21], Endrenyi [B26], Giao and Sarma [B30], Sunde [B57], Thug [B60]) and an exponential earth (Sunde [B57], Thug [B60]) have proven to be good approximations that can be useful in determining system designs.

Some publications (IEEE Std 80, Dawalibi and Mukhedkar [B23], Dawalibi and Mukhedkar [B21], Endrenyi [B26], Giao and Sarma [B30], Rudenberg [B55], Sunde [B57], Thapar and Gross [B59], Thug [B60]) have shown that earth surface potential gradients inside or adjacent to an electrode are mainly a function of topsoil resistivity. In contrast, the ground electrode resistance is primarily a function of deep soil resistivity. In this case, deep soil resistivity refers to depths roughly the diameter of a horizontal electrode system or up to ten times the depth of vertical electrodes. This definition of deep soil resistivity is not valid in those extreme cases where the electrode is buried in extremely high-resistivity topsoil.

[6] Information on references can be found in Clause 2.


Copyright © 2012 IEEE. All rights reserved.

Copyright The Institute of Electrical and Electronics Engineers, Inc.
Provided by IHS under license with IEEE
No reproduction or networking permitted without license from IHS

Order Number: 02120914
Sold to:EGAT [700166108393] - VARRIS.Y@EGAT.CO.TH,
Not for Resale,2016-09-15 03:57:44 UTC

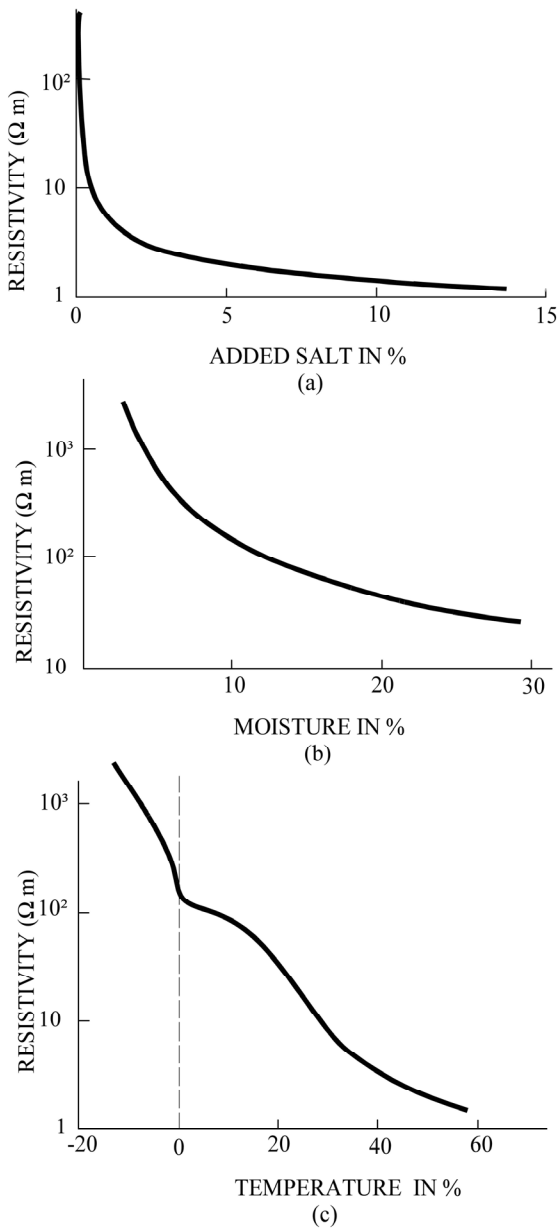


**Figure 1 —Earth resistivity variations (Rudenberg [B55]): (a) salt, (b) moisture, and (c) temperature**

When measuring soil resistivity to determine the earth return (zero sequence) impedance of an ac transmission line, it is important to understand that the earth return impedance is a function of the log of the distance between a conductor and its equivalent return path. This equivalent earth return depth De is assumed to be $658.5 \times (\rho / f)^{0.5}$ (Carson [B17]) based on uniform soil resistivity and relatively low frequency. For 50 and 60 cycle power frequencies, the equivalent earth return depth approaches 1000 m. For higher frequencies such as power line carrier (~150 kHZ), radio, or surge impedance calculations, the equivalent earth return depth is roughly 20 m or less. It is therefore important to perform both shallow and deep resistivity measurements along transmission lines to provide adequate information for determining the earth return impedance.


Copyright © 2012 IEEE. All rights reserved.

Copyright The Institute of Electrical and Electronics Engineers, Inc.
Provided by IHS under license with IEEE
No reproduction or networking permitted without license from IHS

Order Number: 02120914
Sold to:EGAT [700166108393] - VARRIS.Y@EGAT.CO.TH,
Not for Resale,2016-09-15 03:57:44 UTC

**Table 1—Geological period and formation [B57]**

| Earth resistivity ohm-meters | Quarternary | Cretaceous tertiary quarternary | Carboniferous triassic | Cambrian Ordovician Devonian | Precambrian and combination with Cambrian |
|---|---|---|---|---|---|
| 1 Sea water | | | | | |
| 10 Unusually low | | Loam<br>Clay | | | |
| 30 Very low | | Chalk | Chalk | | |
| 100 Low | | | Trap<br>Diabase<br>Shale | | |
| 300 Medium | | | Limestone | Shale | |
| 1000 High | | | Sandstone | Limestone | |
| 3000 Very high | Coarse sand and gravel in surface layers | | | Sandstone<br>Dolomite | Sandstone<br>Quartzite |
| 10 000 Unusually high | | | | | Slate<br>Granite<br>Gneisses |

## 7.2 Methods of measuring earth resistivity

### 7.2.1 Geological information and soil samples

Often, at the site where a grounding system is to be installed, extensive geotechnical work will be performed. This work usually involves geological prospecting, which can provide a considerable amount of information on the nature and configuration of the soil. Such data could be of considerable assistance to the design engineer, who should try to obtain at least the following information:

- Type of soil in each layer
- Moisture content
- Soil pH
- Depth of groundwater

The determination of soil resistivity from the values of resistance measured between opposite faces of a soil sample of known dimensions is not recommended, as the unknown interfacial resistances of the soil sample and the electrodes are included in the measured value.

Obtaining a useful approximation of soil resistivity from resistivity measurements on samples is difficult, and in some cases impossible. This is due to the difficulty of obtaining representative homogeneous soil samples and in duplicating the original soil compaction and moisture content in the test cell.


Copyright © 2012 IEEE. All rights reserved.
Copyright The Institute of Electrical and Electronics Engineers, Inc.
Provided by IHS under license with IEEE
No reproduction or networking permitted without license from IHS
Order Number: 02120914
Sold to:EGAT [700166108393] - VARRIS.Y@EGAT.CO.TH,
Not for Resale,2016-09-15 03:57:44 UTC

### 7.2.2 Variation of depth method or three-point method

In this method, the ground resistance measurements are repeated several times in correlation with the ground rod incremental increase in depth. The purpose of this method is to force more test current through the deep soil. The measured resistance value will then reflect the apparent resistivity for each depth of the rod. Ground rods are preferred for this measurement because they offer two important advantages:

a) The theoretical value of ground rod resistance is simple to calculate with adequate accuracy.
b) Driving ground rods also gives confirmation of how deep the rods can be driven during installation.

A disadvantage of this method is that the rod might vibrate as it is driven, resulting in poor contact with the soil along its length, thus, making a conversion to true apparent resistivity difficult.

The variation of depth method gives useful information about the nature of soil in the vicinity of the rod (five to ten times the rod length). For additional details regarding this method, refer to 8.2. For large areas, several rod locations can give an indication of significant lateral changes in soil resistivity. If a large volume (large area and depth) of soil is tested, then it might be preferable to use the four-point method because driving long rods might not be practical in some soils.

### 7.2.3 Four-point method

A good method for measuring the apparent resistivity of large volumes of undisturbed earth is the four-point method (Wenner [B62]). Four auxiliary probes are installed in the earth, all at depth $b$ and spaced (in a straight line) at intervals $a$. A test current $I$ is passed between the two outer probes, and the potential $V$ between the two inner probes is measured with a potentiometer or high-impedance voltmeter. Then, the $V/I$ ratio gives the resistance $R$ in ohms.

Two different variations of the four-point method are often used, as follows:

a) *Equally Spaced or Wenner Arrangement.* With this arrangement, the probes are equally spaced, as shown in Figure 2(a). Let $a$ be the distance between two adjacent probes. Then, the apparent resistivity ρ in the terms of the length units in which $a$ and $b$ are measured is

$$\rho = \frac{4\pi aR}{1 + \frac{2a}{\sqrt{a^2 + 4b^2}} - \frac{a}{\sqrt{a^2 + b^2}}} \tag{2}$$

Theoretically, the electrodes should be point contacts or hemispherical electrodes of radius $b$. However, in practice, four rods are usually placed in a straight line at intervals $a$, driven to a depth not exceeding 0.1 $a$. Then, the user can assume $b = 0$ and the equation becomes

$$\rho = 2\pi aR \tag{3}$$

and gives the approximate apparent soil resistivity to the depth $a$.

A set of readings taken with various probe spacings gives a set of resistivities that, when plotted against spacing, indicates whether there are distinct layers of different soil or rock and gives an idea of their respective resistivities and depth (Figure 3).


Copyright © 2012 IEEE. All rights reserved.

Copyright The Institute of Electrical and Electronics Engineers, Inc.
Provided by IHS under license with IEEE
No reproduction or networking permitted without license from IHS

Order Number: 02120914
Sold to:EGAT [700166108393] - VARRIS.Y@EGAT.CO.TH,
Not for Resale,2016-09-15 03:57:44 UTC

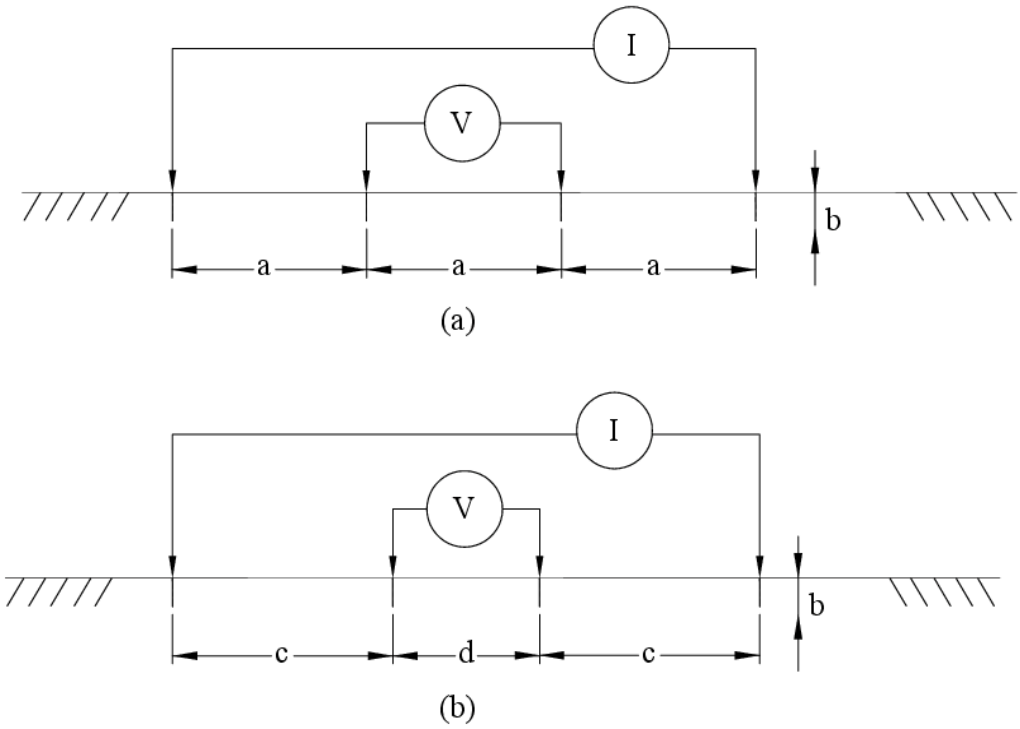


**Figure 2 —Four point method: (a) equally spaced test probes and (b) unequally spaced test probes**

b) *Unequally Spaced or Schlumberger–Palmer Arrangement.* One shortcoming of the Wenner method is the rapid decrease in magnitude of potential between the two inner electrodes when their spacing is increased to relatively large values. Historically, instruments were inadequate for measuring such low potential values, although improved sensitivity in modern testers mitigates this disadvantage to some extent. Another disadvantage with the Wenner method is the requirement to reposition all four probes for each depth to be measured. The arrangement shown in Figure 2(b) can be used to measure soil resistivity successfully when current probes are separated by a large distance or to expedite testing for multiple current probe locations.

With the Schlumberger method, the inner probes are placed closer together and the outer probes are placed farther apart. Unlike the Wenner method, which requires all probes to be moved to calculate soil resistivity at different depths, the Schlumberger method only required the outer probes to be repositioned for subsequent measurements. Reducing the number of probes to be repositioned for each test makes the Schlumberger method a faster choice for testing at different depths.

The equation to be used in this case can be easily determined (Palmer [B50]). If the depth of burial of the electrodes $b$ is small compared to their separation $d$ and $c$, and $c > 2d$, then the measured apparent resistivity can be calculated as follows:

$$\rho = \pi c(c+d)R/d \tag{4}$$


Copyright © 2012 IEEE. All rights reserved.
Copyright The Institute of Electrical and Electronics Engineers, Inc.
Provided by IHS under license with IEEE
No reproduction or networking permitted without license from IHS
Order Number: 02120914
Sold to:EGAT [700166108393] - VARRIS.Y@EGAT.CO.TH,
Not for Resale,2016-09-15 03:57:44 UTC

The resistivity calculated by Equation (4) is the apparent resistivity to the approximate depth [2*c* +*d*]/2, which is the distance from the center of the test to the outer current probes [Figure 2(b)].

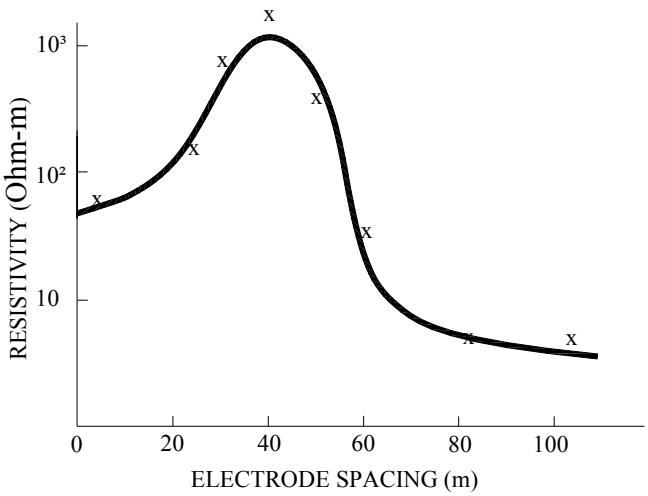


**Figure 3 —Typical resistivity curve**

Like the variation of depth method, the four-point method gives the apparent resistivity for a specific, although broader, volume of soil. It is advantageous to take measurements along several profiles around the area of concern to detect lateral changes in soil resistivity, as well as to determine any possible interference effects on the measurements due to nearby conductive objects. Another way to gain confidence that conductive objects in the earth do not affect the measurements is to repeat the same measurement in the same location, but 90° relative to the first one. The measured values should correlate.

## 7.3 Interpretation of measurements

The interpretation of the results obtained in the field is perhaps the most difficult part of the measurement process. As mentioned in 7.1, the earth resistivity variation is large and complex because of the heterogeneity of earth. Except for very few cases, it is essential to establish a simple equivalent to the earth structure. This equivalent depends on the following factors:

a) The accuracy and extent of the measurements
b) The method used
c) The complexity of the mathematics involved
d) The purpose of the measurements

For applications in power engineering, the two-layer equivalent model is accurate enough in many cases without being mathematically too involved. However, there are computer solutions available that can effectively estimate multilayer soil models for various measurement techniques.

### 7.3.1 Geological information and soil samples

Special tools or mathematical equations are not necessary to interpret such information, which are mainly given in the figures and tables provided by geological explorations. As shown in Table 1, determining an accurate soil model from simple classifications of types of soil is difficult. The classifications simply give a crude estimation of the resistivity of different types of soils.


Copyright © 2012 IEEE. All rights reserved.
Copyright The Institute of Electrical and Electronics Engineers, Inc.
Provided by IHS under license with IEEE
No reproduction or networking permitted without license from IHS
Order Number: 02120914
Sold to:EGAT [700166108393] - VARRIS.Y@EGAT.CO.TH,
Not for Resale,2016-09-15 03:57:44 UTC

### 7.3.2 Variation of depth method (see Annex B)

The following interpretations assume that the tested ground is a rod driven to various depths $l_1$ through $l_n$. Table 2 shows a sample set of measured values. Assuming the rod radius $r$ is small compared to $l$, Equation (7) can be used to compute an apparent resistivity for each measured value. The user should note that Equation (7) is derived based on the assumption of uniform soil resistivity, so the apparent resistivity is approximate, at best.

The ground resistance of the rod buried in a uniform soil is given by Thug [B60]:

$$R = \frac{\rho}{2\pi l} \ln \frac{2l}{r} \tag{5}$$

or

$$R = \frac{\rho}{2\pi l} \left[ \ln\left(\frac{4l}{r}\right) - 1 \right] \tag{6}$$

depending on the approximations used.

Rearranging for apparent resistivity gives:

$$\rho_a = \frac{R 2\pi l}{\ln\left(\frac{4l}{r}\right) - 1} \tag{7}$$

For each length $l$ of the rod, the measured resistance value $R$ determines the apparent resistivity value $\rho_\alpha$, which, when plotted against $l$, provides a visual aid for determining earth resistivity variation with depth. For more clarity, suppose that the field tests of Table 2 gave the curve shown in Figure 4(a) and Figure 4(b). These curves were mathematically derived to fit perfect two-layer soil models. By inspection of the curve, it can be concluded that the soil structure for Figure 4(a) is at least two distinct layers. For small values of $l$ (0 m to 6 m), the soil has a resistivity value of nearly 300 Ω-m. The lower layer is more conductive. Its resistivity value approaches 100 Ω-m. Thus, an adequate two-layer soil model can be obtained by visual inspection for this case. Now consider the curve of Figure 4(b). For this case, the upper layer soil is approximately 100 Ω-m to a depth of approximately 6 m. However, the exact value of the lower layer cannot be obtained through visual inspection. The value appears to approach 250 Ω-m, but the correct value is 300 Ω-m. The following two solutions are then possible:

a) Continue measurements with rods driven deeper into the soil
b) Use analytical techniques to compute, from the measured data, an equivalent earth resistivity model


Copyright © 2012 IEEE. All rights reserved.

Copyright The Institute of Electrical and Electronics Engineers, Inc.
Provided by IHS under license with IEEE
No reproduction or networking permitted without license from IHS

Order Number: 02120914
Sold to:EGAT [700166108393] - VARRIS.Y@EGAT.CO.TH,
Not for Resale,2016-09-15 03:57:44 UTC

**Table 2—Expected three-point field measurements for mathematically derived two-layer soil models**

| Rod depth m (ft) | $\rho_1$= 300, $\rho_2$= 100, h = 6. 1 m (20 ft) | | $\rho_1$ = 100, $\rho_2$ = 300, h = 6.1 m (20 ft) | |
|---|---|---|---|---|
| | Resistance (Ω) | Apparent resistivity (Ω-m) | Resistance (Ω) | Apparent resistivity (Ω-m) |
| 0.3 (1.0) | 647.60 | 299.3 | 218.30 | 100.9 |
| 0.9 (3.0) | 270.60 | 296.5 | 92.68 | 101. 6 |
| 1.5 (5.0) | 177.10 | 294.7 | 61.52 | 102.4 |
| 3.0 (10.0) | 97.63 | 290.0 | 35.13 | 104.4 |
| 4.5 (15.0) | 67.85 | 284. 5 | 25.43 | 106.6 |
| 6.1 (20.0) | 50.82 | 272.6 | 20.63 | 110. 7 |
| 9.1 (30.0) | 21.77 | 165.8 | 18.22 | 138.7 |
| 15.2 (50.0) | 10.91 | 129.7 | 14.58 | 173.3 |
| 21.3 (70.0) | 7.41 | 118.4 | 12.16 | 194.2 |
| 27.4 (90.0) | 5.64 | 112.5 | 10.42 | 207.8 |
| 33.5 (110.0) | 4.57 | 108.9 | 9.13 | 217.5 |
| 39.6 (130.0) | 3.84 | 106.1 | 8.12 | 224.3 |
| 45.7 (150.0) | 3.32 | 104.2 | 7.31 | 229.4 |

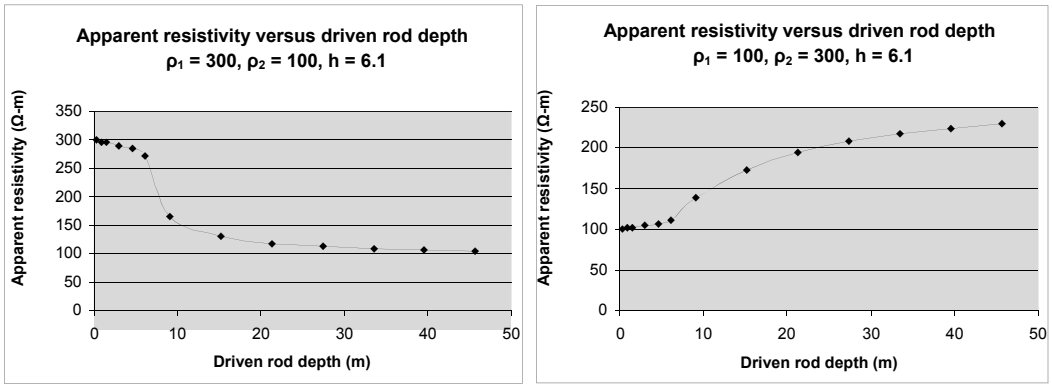


(a) (b)

**Figure 4 —Variation of depth mathematically derived field measurements**

When using analytical methods (computer software) to determine the soil parameters, it is appropriate to replace the simple Equation (5) or Equation (6), which assume uniform soil resistivity, with more exact equations based on layered soil models. Then, the soil parameters for each layer can be determined to obtain the best fit with the measured driven-rod resistances.

Additional measurements will certainly help in obtaining the resistivity of each layer. However, the thicknesses of each layer are not always easy to determine. Moreover, driving rods to great depth can be difficult and expensive.

The resistance of a rod in such earth models is known or can be easily calculated (see Annex A). Using a simple computer program or simply by a cut-and-try method, the best fit to the experimental results can be obtained (see Annex B).

As mentioned, the variation of depth method fails to predict earth resistivity at large distances from the area where the test rod is embedded (distances larger than five to ten times the driven rod length). For large areas, several rod locations can give an indication of significant lateral changes in soil resistivity.


Copyright © 2012 IEEE. All rights reserved.
Copyright The Institute of Electrical and Electronics Engineers, Inc.
Provided by IHS under license with IEEE
No reproduction or networking permitted without license from IHS
Order Number: 02120914
Sold to:EGAT [700166108393] - VARRIS.Y@EGAT.CO.TH,
Not for Resale,2016-09-15 03:57:44 UTC

### 7.3.3 Four-point method

The interpretation of the four-point method is similar to that of the method described in 7.3.2. For example, in the case of the Wenner arrangement, the measured apparent resistivity is plotted against the electrode spacing *a*. The resulting curve then indicates the soil structure. Again the depths of various layers might not be easy to determine by visual inspection of the curve. Many authors (Gish and Rooney [B32], Lancaster-Jones [B43], Thug [B60], Wenner [B62]) gave quick empirical rules to help in establishing the layer thickness. The following are examples:

a) The Gish and Rooney method [B32]: From the resistivity curve, a change in formation, for example, another layer is reached at a depth equal to any electrode separation at which a break or change in curvature occurs.
b) The Lancaster–Jones method [B43]: The depth to the lower layer is taken as two thirds the electrode separation at which the point of inflexion occurs.
c) Zohdy [B63] stated there are five axioms that hold true about soil resistivity sounding curves (plots of apparent resistivity vs. probe separation):
    1) The computed apparent resistivities are always positive.
    2) As the actual resistivity increases or decreases with greater depth, the apparent resistivities also increase or decrease with greater probe spacings.
    3) The maximum change in apparent resistivity occurs at a probe spacing larger than the depth at which the corresponding change in actual resistivity occurs. Thus, the changes in apparent resistivity are always plotted to the right of the probe spacing corresponding to the change in actual resistivity.
    4) The amplitude of the curve is always less than or equal to the amplitude of the actual resistivity versus depth curve.
    5) In a multilayer model, a change in the actual resistivity of a thick layer results in a similar change in the apparent resistivity curve.

Using these axioms as guidance, one can estimate the appropriate multilayer model that best represents a particular soil structure, realizing that the probe spacings from the sounding curves *do not* correspond to the actual depth of change in resistivity, and that the magnitudes of the apparent resistivities *do not* correspond to the actual resistivity. Typically, one of the following earth models is used:

— Uniform resistivity
— Horizontal layers of uniform resistivities (see Annex A)
— Exponential variation of the resistivity (see Annex A)

For each model, the mathematical relation between the apparent resistivity and the various earth parameters needs to be known or to be easy to calculate.

The best model to use depends on the purpose of the measurements. Often, a two-layer earth model gives excellent results (Thug [B60]).

Figure 5 shows a mathematically derived set of values representing equally spaced field measurements (Table 3) for two perfect two-layer earth soil models. In Figure 5(a), the first few readings appear to indicate a changing soil resistivity at shallow depth, then subsequent readings approach the correct value of 300 Ω-m, and finally the readings approach the correct lower layer soil resistivity of 100 Ω-m. From this curve, a clear indication of the depth of the upper layer cannot be easily determined, although it appears to be something less than 5 m. None of the approximate methods mentioned above correctly predicts the depth of 6.1 m. In Figure 5(b), the depth of the upper layer is even more difficult to predict. In fact, it is not clear from Figure 5(b) that there is a distinct change in soil resistivities; it appears to be continuously changing to a value near 300 Ω-m.


Copyright © 2012 IEEE. All rights reserved.

Copyright The Institute of Electrical and Electronics Engineers, Inc.
Provided by IHS under license with IEEE
No reproduction or networking permitted without license from IHS

Order Number: 02120914
Sold to:EGAT [700166108393] - VARRIS.Y@EGAT.CO.TH,
Not for Resale,2016-09-15 03:57:44 UTC

The methods discussed in Annex A and Annex B can be used to determine the best-fit soil parameters for uniform or two-layer soil models. Alternatively, software is available that can interpret the measurements into an appropriate soil model consisting of uniform soil or several layers of soil.

**Table 3—Expected four-point, equally spaced field measurements for mathematically derived two-layer soil models**

| Spacing m (ft) | $\rho_1 = 300$, $\rho_2 = 100$, h = 6.1 m (20 ft) | | $\rho_1 = 100$, $\rho_2 = 300$, h = 6.1 m (20 ft) | |
|---|---|---|---|---|
| | Resistance (Ω) | Apparent resistivity (Ω-m) | Resistance (Ω) | Apparent resistivity (Ω-m) |
| 0.3 (1.0) | 159.15 | 300.0 | 53.05 | 100.0 |
| 0.9 (3.0) | 52.99 | 299.7 | 17.71 | 100.1 |
| 1.5 (5.0) | 31.67 | 298.5 | 10.67 | 100.6 |
| 3.0 (10.0) | 15.38 | 289.8 | 5.51 | 103.9 |
| 4.5 (15.0) | 9.64 | 272.6 | 3.92 | 110.9 |
| 6.1 (20.0) | 6.49 | 248.7 | 3. 16 | 121.0 |
| 9.10 (30.0) | 3.56 | 203.3 | 2.50 | 142.8 |
| 15.2 (50.0) | 1.51 | 144.5 | 1.90 | 181.4 |
| 21.3 (70.0) | 0.90 | 120.4 | 1.56 | 208.6 |
| 27.4 (90.0) | 0.64 | 110.8 | 1.32 | 227.8 |
| 33.5 (110.0) | 0.51 | 106.5 | 1.15 | 241.4 |
| 39.6 (130.0) | 0.42 | 104.3 | 1.01 | 251.7 |
| 45.7 (150.0) | 0.36 | 103.1 | 0.90 | 259.6 |

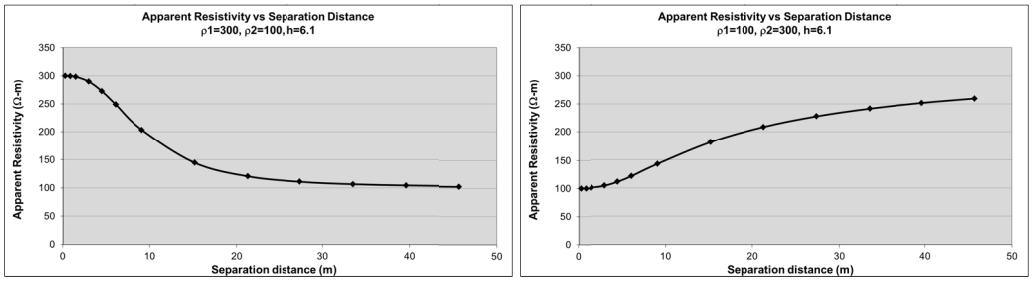


(a) (b)

**Figure 5—Four-point, equally spaced method mathematically derived field measurements**

## 7.4 Guidance on performing field measurements

### 7.4.1 Interferences

When making measurements using the variation-of-depth or four-point methods, be careful to avoid interferences from nearby structures or circuits. These interferences might be passive or active. Passive interferences include, but are not limited to, metallic fences, transmission or distribution line pole grounds, large building foundations, buried conductive objects, and metallic pipes. These passive interferences can act as a short circuit to distort the potentials created in the soil from the injected test current. Active interferences include, but are not limited to, parallel transmission or distribution lines, parallel communication circuits and stray dc currents. Use test probes made of a material that will minimize galvanic voltages between the probes. These active interferences can be a source of current that is added to or subtracted from the injected test current, again, distorting the potentials at the potential probes.


Copyright © 2012 IEEE. All rights reserved.

Copyright The Institute of Electrical and Electronics Engineers, Inc.
Provided by IHS under license with IEEE
No reproduction or networking permitted without license from IHS

Order Number: 02120914
Sold to:EGAT [700166108393] - VARRIS.Y@EGAT.CO.TH,
Not for Resale,2016-09-15 03:57:44 UTC

**WARNING**

Avoid placing long lengths of test leads parallel to high current sources.

A second, and more important, reason for avoiding parallel active sources of current is the possible hazardous voltage that can be coupled onto the test wire via electromagnetic induction. With several hundred feet of wire stretched out parallel to a line with large load current, there might be enough voltage induced into the wire to result in a severe shock to a person in series with the end of the wire and one of the test probes.

### 7.4.2 Probe spacing influence on test accuracy

Depending on the actual soil resistivity variations with depth, the probe spacing for the Wenner method can significantly influence the accuracy of the computed multilayer soil model. Southey and Dawalibi [B56] have shown in Table 4 that the ranges of errors in resistance, touch, and step voltages for a ground grid can be found for probe spacing as a function of the ground grid dimension. This analysis was based on a number of "perfect" two-layer soil models, with the apparent resistivity versus probe spacing computed using a computer program. Therefore, there is no source of error between the two-layer model layer and depth parameters versus the actual soil structure.

**Table 4—Error range based on probe spacing**

| Probe spacing (% grid length) | Error range (%) | |
|---|---|---|
| | Grid resistance | Touch and step voltage (in % of grid GPR) |
| 40% | –50% to +30% | –20% to +110% |
| 100% | –33% to +9% | –8% to +50% |
| 300% | –17% to +9% | –8% to +20% |

Table 4 demonstrates that probe spacings on the order of the ground grid dimension should give sufficient model accuracy for computing touch and step voltages, whereas probe spacings of more than three times the grid length are required for conservative predictions of the grid resistance.

For the variation-of-depth method, the remote current and potential probes should be placed to satisfy the electrode impedance requirements of Clause 8.

## 8. Ground impedance

### 8.1 General

Resistance measurements of a ground grid or ground electrode have been performed since the early 1950s and are still the most popular tests in the electric utility industry. The resistance data provides a quick estimate of the ground potential rise ($I_g \times R_g$) of the ground electrode. Due to their higher magnitude of available fault current and the higher probability of exposure, substation ground grids are typically designed to limit the surface voltage gradients to tolerable values. There can or cannot be a limit on the substation ground grid resistance, depending on the utility's preference. Unlike substation ground grids, transmission or distribution pole grounds are designed and installed based on limiting their impedances to remote ground to specified values. This practice is practical and more appropriate for improving lightning performance of transmission and distribution systems. In either case, the measurement of ground grid or ground electrode impedance can be an important part of designing or analyzing a grounding system. For more information concerning the use of ground impedance


Copyright © 2012 IEEE. All rights reserved.
Copyright The Institute of Electrical and Electronics Engineers, Inc.
Provided by IHS under license with IEEE
No reproduction or networking permitted without license from IHS
Order Number: 02120914
Sold to:EGAT [700166108393] - VARRIS.Y@EGAT.CO.TH,
Not for Resale,2016-09-15 03:57:44 UTC

measurements for designing electrical power systems, see IEEE Std 80, IEEE Std 142™-2007 [B36] and IEEE Std 367™-2012 [B39].

Connections to earth have complex impedances that include resistive, capacitive, and inductive components, all of which affect their current-carrying capabilities. The resistance of the connection to remote earth is of particular interest to those concerned with power frequencies because it is affected by the resistivity of the earth in the area of the connection assuming the grounding system is small enough that the resistance dominates the overall impedance. The capacitance and inductance values are of interest to those concerned with higher frequencies, such as radio communications and lightning applications, or very large grounding systems when the resistance does not dominate the overall impedance.

A substation grounding system typically consists of buried ground conductors connected to several transmission structure and distribution pole grounds interconnected by shield and neutral conductors. The interconnected impedance of this type of grounding system will be referred to as the *ground system impedance.* Isolated pole grounds and most distribution substations with typical soil resistivities are predominately resistive. On the other hand, large grounding systems, especially in low soil resistivity areas, will have a significant reactive component. This clause describes techniques of measuring the impedance of isolated, as well as interconnected, grounding systems. To avoid confusion, the term "resistance" will be used to mean the impedance of an isolated ground electrode in the following subclauses.

### 8.1.1 Characteristics

The impedance of a grounding system largely depends on the resistivity of the surrounding soil and the extent and configuration of the buried electrode. Earth at a given location can be composed of various combinations of dry soil, clay, gravel, slate, sandstone, or other natural materials of widely varying resistivity. The soil can be relatively homogeneous over a large area, or it can be layered in granite, sand, or other high-resistivity materials and, thus, be practically insulated from the surrounding area. Consequently, the grounding impedance can vary with the season as the temperature, moisture content, and density of the soil change.

Calculations and experience show that, in a given soil, the effectiveness of a ground grid is dependent largely on the overall size of the ground grid and the resistivity of the soil. The addition of conductors and ground rods within an existing ground grid system can also aid somewhat in reducing the ground grid impedance. This reduction diminishes with the addition of each successive conductor or rod.

After the installation of a substation or other grounded structure, the settling of the soil with annual cyclical weather changes tends to reduce the ground impedance during the first year or two.

The impedance of a grounding electrode is usually measured in terms of resistance because the reactance is generally negligible with respect to the resistive component. The reactive component increases with the size of the ground grid and especially when the ground grid is interconnected with grounded neutral and shield wire systems. Determination of the reactive component is necessary when the analysis involves surge or impulse currents.

The resistance will not usually vary greatly from year to year after the first year or two following its installation. Although the ground grid can be buried only half a meter below the surface, the resistance of a ground grid seems to bear little relationship to the changes in the resistivity at the burial level. The lack of correlation between grid resistance and burial depth resistivity is especially true for grids equipped with long-driven rods in contact with deep soil. This obviously will not be true for ground grids buried over a high-resistivity stratum such as a rock bed or grids buried in permafrost.


Copyright © 2012 IEEE. All rights reserved.

Copyright The Institute of Electrical and Electronics Engineers, Inc.
Provided by IHS under license with IEEE
No reproduction or networking permitted without license from IHS

Order Number: 02120914
Sold to:EGAT [700166108393] - VARRIS.Y@EGAT.CO.TH,
Not for Resale,2016-09-15 03:57:44 UTC

### 8.1.2 Theoretical value of ground resistance

Calculated or theoretical values of the resistance of an electrode to remote earth can vary from the measured value because of the following factors:

a) Inadequacy of the analytical methods used in the calculations of the resistance.
b) Earth resistivities at the time of the resistance measurement being different from those assumed in the calculations.
c) Inaccurate or insufficient extent of the resistivity survey; for example, number and dispersal of tests, probe spacing, and inadequacy of the instrumentation used.
d) Presence of buried metallic structures and ground wires in the proximity of testing site, which can divert a substantial amount of the test current.
e) Clamp-on meter readings might contain a large error if the reactance in the test circuit is significant compared to the resistance of the test circuit or if the filters are inadequate to filter out 50 Hz/60 Hz frequencies caused by stray currents. Clamp-on test meters are particularly subject to errors caused by reactance in the test circuit because the test frequencies typically range from 1 kHz to 3.4 kHz. Also, if ground loops are present, clamp-on ground meters might not measure the intended ground impedance. For more information, see Annex E.

The difference between the measured and calculated values of the resistance can be minimized if the soil resistivity and ground grid resistance measurements are obtained under similar weather conditions. Similarly, for the ground grids that are influenced by the seasonal changes, it is prudent to perform the soil resistivity measurements during adverse weather conditions to obtain conservative values for the location.

## 8.2 Methods of measuring ground impedance

### 8.2.1 General

This subclause describes the general methods of measuring ground impedance (IEEE Std 80, Curdts [B18], Dawalibi and Barbeito [B19], Dawalibi and Mukhedkar [B20], Dawalibi and Mukhedkar [B22], EPRI EL-2699 [B27], IEEE Std 367-2012 [B39], Kinyon [B42], Megger [B45], Larsen and Nordell [B44], Meliopoulos et al. [B47], Tagg [B58], Thug [B60], Thug [B61]). For a description of available instruments, refer to Annex E. In this subclause, the measured impedance value is called resistance, even though it contains a reactive component. The reactive component can be very significant for large or interconnected grounding systems. The resistance of a ground electrode usually is determined with alternating or periodically reversed current. This minimizes the effect of galvanic voltages that can be present at the probes and interference from direct currents in the soil from cathodic protection or telluric currents. Applying test currents that operate at a frequency different from power or harmonic frequencies will minimize interference from possible stray currents.

### 8.2.2 Methods

#### 8.2.2.1 Two-point method

In this method, the resistance of the subject ground electrode is measured in series with an auxiliary ground electrode. The resistance of the auxiliary ground is presumed to be negligible in comparison with the resistance of the subject ground. The measured value then represents the resistance of the subject ground.

One application of this method is to measure the resistance of a driven ground rod with respect to a nearby residential house. Typically, a residential house has a low-impedance grounding system due to


Copyright © 2012 IEEE. All rights reserved.

Copyright The Institute of Electrical and Electronics Engineers, Inc.
Provided by IHS under license with IEEE
No reproduction or networking permitted without license from IHS

Order Number: 02120914
Sold to:EGAT [700166108393] - VARRIS.Y@EGAT.CO.TH,
Not for Resale,2016-09-15 03:57:44 UTC

its tie with the neutral conductor of the power supply system. Using such a grounding system as an auxiliary ground can produce a test result with reasonable accuracy.

Obviously, this method is subject to large errors when testing for low-resistance grounds. If the subject and auxiliary grounds are too close to each other, then the mutual resistance between the grounds can also be a source of error. However, this method is a useful tool where a *go or no-go* type of test is all that is required.

#### 8.2.2.2 Three-point method

This method involves the use of two auxiliary electrodes with their resistances designated as $r_2$ and $r_3$.The resistance of the subject electrode is designated $r_1$. The resistance between each pair of electrodes is measured and are designated $r_{12}$, $r_{13}$, and $r_{23}$, where

$r_{12} = r_1 + r_2$, etc.

Solving the three simultaneous equations, it follows that

$$r_1 = \frac{(r_{12}) - (r_{23}) + (r_{13})}{2} \tag{8}$$

By measuring the series resistance of each pair of ground electrodes and substituting the resistance values in the equation, the value of $r_1$ can be established. If the two auxiliary electrodes are of materially higher resistance than the electrode under test, then the errors in the individual measurements will be greatly magnified in the final result. For accurate measurement, the electrodes need to be at a far enough distance from each other so as to minimize the mutual resistances between them. In cases involving inadequate distances between the electrodes, absurdities such as zero or negative resistances can arise. In measuring the resistance of a ground rod, separate the three electrodes by at least three times the depth of the subject rod. In providing this guidance, the assumption is also made that the auxiliary electrodes are driven to the same or less depth as the subject ground rod. This method becomes more difficult to apply as the grounding electrode system becomes large and complex and other methods are preferred, especially if higher accuracy is desired.

#### 8.2.2.3 Staged fault tests

Staged high-current tests can be performed at full or reduced voltages for those cases where specific information is desired on a particular grounding installation. The object is to record the voltage between selected points and currents at specific circuits. The most practical method for recording measurements is to use existing instrumentation such as spare channels on fault recorders. Typically, the voltages and currents to be recorded are of high magnitudes, and as a result, attenuation circuits (current transformers [CTs], voltage transformers, voltage dividers, etc.) are required. The voltages to be measured can be estimated by performing fall-of-potential tests.

The input impedance of the recording device needs to be significantly higher than the resistance being measured to improve accuracy. The test circuit can involve a high-resistance auxiliary electrode connected to the primary side of the potential transformer. In such a case, the recording device can be calibrated by inserting a variable voltage source between the potential transformer and the auxiliary electrode producing the voltages that are to be measured.

#### 8.2.2.4 Fall-of-potential method

The fall-of-potential (FOP) method involves passing a current between a ground electrode (G) and a current probe (CP), and then measuring the voltage between G and a potential probe (PP), as shown in Figure 6. To minimize interelectrode influences due to mutual resistances, the current probe is generally placed at a substantial distance from the ground electrode under test.


Copyright © 2012 IEEE. All rights reserved.

Copyright The Institute of Electrical and Electronics Engineers, Inc.
Provided by IHS under license with IEEE
No reproduction or networking permitted without license from IHS

Order Number: 02120914
Sold to:EGAT [700166108393] - VARRIS.Y@EGAT.CO.TH,
Not for Resale,2016-09-15 03:57:44 UTC

Typically, this distance is at least five times the largest dimension of the ground electrode under test. The potential probe is typically placed in the same direction as the current probe, but it can be placed in the opposite direction, as shown in Figure 6. In practice, the distance "X" for the potential probe is often chosen to be 62% of the distance of the current probe when current and potential probes are in the same direction (62% rule). This distance is based on the theoretically correct position for measuring the exact electrode impedance for a soil with uniform resistivity (Curdts [B18]), assumes a sufficient distance between the ground electrode under test and the test probes that are present to allow test probes to be considered as being a hemisphere, and further assumes that the ground electrode has no external interconnections.

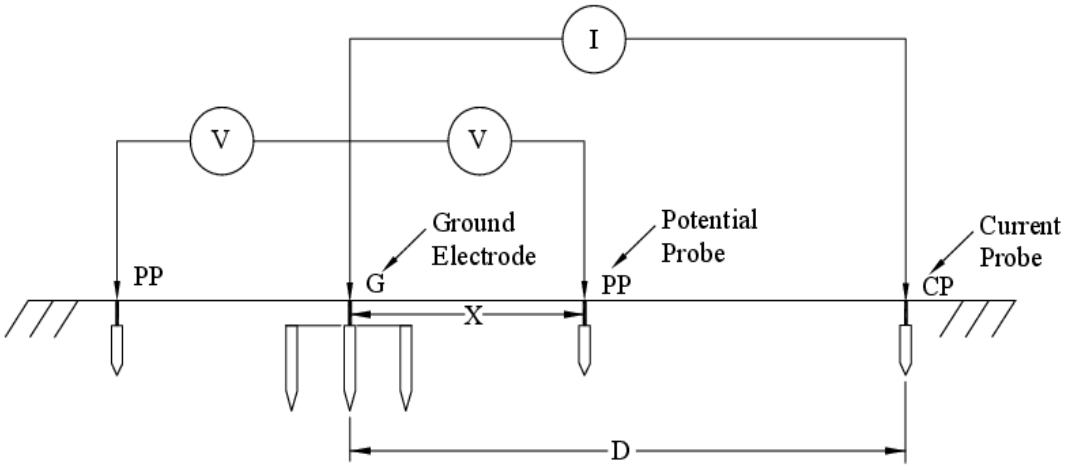


**Figure 6—Illustration of fall-of-potential method**

Once the criteria for the current probe are satisfied, the location of the potential probe is critical to measuring accurately the resistance of the ground electrode. The location needs be free from any influence from both the ground electrode under test and the current probe. A practical way to determine whether the potential probe is free from other electrodes' influences is to obtain several resistance readings by moving the potential probe between the ground grid and the current probe. Two to three consecutive constant resistance readings can be assumed to represent the true resistance value (flat slope method). Figure 7 shows typical graphs of impedance versus PP distance from ground. The solid line representing the orientation of the auxiliary electrodes in the same direction approaches zero near the ground electrode and infinity near the current probe. The graph corresponding to PP and CP in opposite directions from each other behaves differently, as shown by the dashed line. In an ideal situation, a clear inflection point can be identified that approaches the impedance of the electrode under test. The graphs shown in Figure 7 correspond to soils with uniform resistivity. For nonuniform soils, these graphs might not have zero-slope sections that usually indicate influence-free zones.

The FOP theory suggests that, for a soil with uniform resistivity, the dashed line shown in Figure 7 will always be approaching the solid line from below, but the required separation distance is greater when using probes on opposite sides. Also, the variations due to soil nonuniformity are greater when the PP and CP are located in opposite direction (dashed line).

Additional limitations of the FOP method prevent it from yielding a true impedance value. An accurate measurement of impedance is obtained only when the subject grounding system can be represented as an equivalent hemisphere with an electrical center for measuring various probe distances. An effective electrical center is defined as a point on a grounding system where most of the test current flows. Most isolated ground grids with simple geometries can be represented by equivalent hemispheres. For complex grounding systems such as a large substation ground grid (or even a small substation ground


Copyright © 2012 IEEE. All rights reserved.
Copyright The Institute of Electrical and Electronics Engineers, Inc.
Provided by IHS under license with IEEE
No reproduction or networking permitted without license from IHS
Order Number: 02120914
Sold to:EGAT [700166108393] - VARRIS.Y@EGAT.CO.TH,
Not for Resale,2016-09-15 03:57:44 UTC

grid with an interconnected shield and neutral systems), such a representation is extremely difficult to obtain.

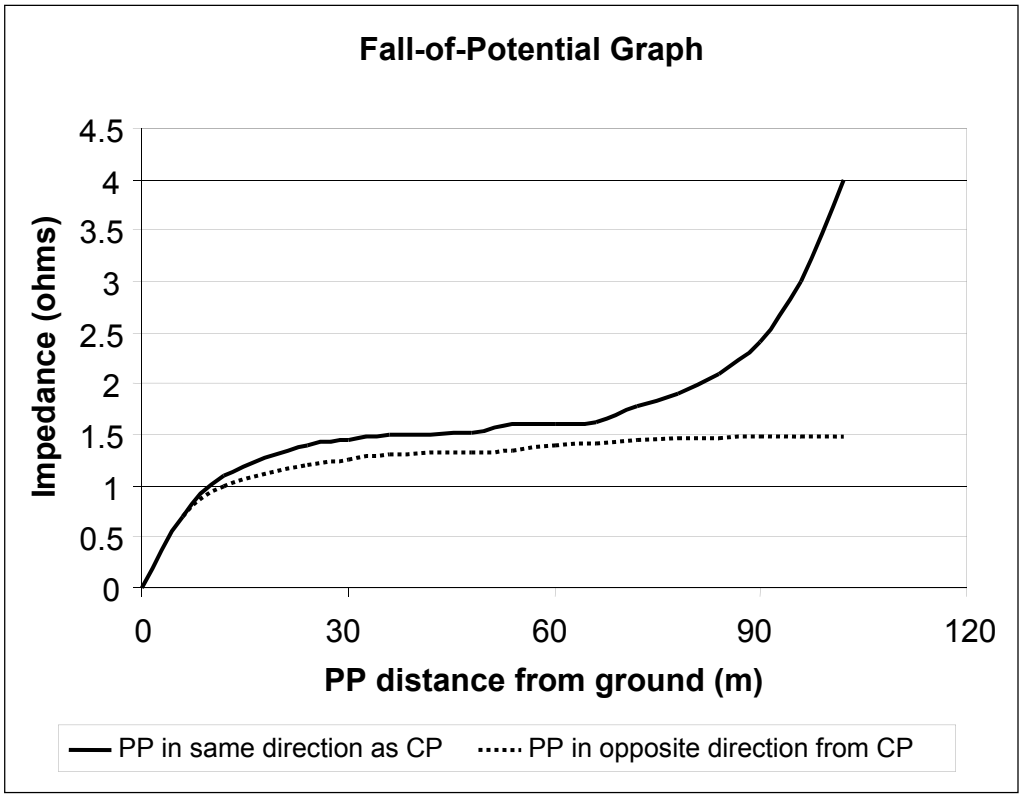


**Figure 7—Typical impedance versus potential probe spacing for fall-of-potential method**

Dr. G. F. Tagg [B58] described a method known as the "slope method." In his method, the assumptions of uniform soil resistivity and representation of the grounding electrode system as an equivalent hemispherical electrode remained as before. However, his method allowed measuring the probe distances from a convenient point such as from the edge of a grounding electrode system by introducing the error distances in the fall-of-potential equation. Dr. Tagg's slope method [B58] can be summarized as follows:

a) Choose a convenient starting point for linear measurements and select a suitable distance for the CP.

b) Measure resistances $R_1$, $R_2$, and $R_3$ by inserting PPs at 0.2CP, 0.4CP, and 0.6CP distances, respectively.

c) Calculate the slope-variation coefficient $\mu = (R_3 - R_2) / (R_2 - R_1)$.

d) Look up the value of $PP_T$/CP corresponding to the "μ" value in Table 5.

e) Measure the resistance by placing the potential probe at $PP_T$ distance.


Copyright © 2012 IEEE. All rights reserved.
Copyright The Institute of Electrical and Electronics Engineers, Inc.
Provided by IHS under license with IEEE
No reproduction or networking permitted without license from IHS
Order Number: 02120914
Sold to:EGAT [700166108393] - VARRIS.Y@EGAT.CO.TH,
Not for Resale,2016-09-15 03:57:44 UTC

**Table 5—Slope method coefficients [B58]**

| μ | $PP_T/CP$ | μ | $PP_T/CP$ | μ | $PP_T/CP$ |
|---|---|---|---|---|---|
| 0.40 | 0.643 | 0.80 | 0.580 | 1.20 | 0.494 |
| 0.41 | 0.642 | 0.81 | 0.579 | 1.21 | 0.491 |
| 0.42 | 0.640 | 0.82 | 0.577 | 1.22 | 0.488 |
| 0.43 | 0.639 | 0.83 | 0.575 | 1.23 | 0.486 |
| 0.44 | 0.637 | 0.84 | 0.573 | 1.24 | 0.483 |
| 0.45 | 0.636 | 0.85 | 0.571 | 1.25 | 0.480 |
| 0.46 | 0.635 | 0.86 | 0.569 | 1.26 | 0.477 |
| 0.47 | 0.633 | 0.87 | 0.567 | 1.27 | 0.474 |
| 0.48 | 0.632 | 0.88 | 0.566 | 1.28 | 0.471 |
| 0.49 | 0.630 | 0.89 | 0.564 | 1.29 | 0.468 |
| 0.50 | 0.629 | 0.90 | 0.562 | 1.30 | 0.465 |
| 0.51 | 0.627 | 0.91 | 0.560 | 1.31 | 0.462 |
| 0.52 | 0.626 | 0.92 | 0.588 | 1.32 | 0.458 |
| 0.53 | 0.624 | 0.93 | 0.556 | 1.33 | 0.455 |
| 0.54 | 0.623 | 0.94 | 0.554 | 1.34 | 0.452 |
| 0.55 | 0.621 | 0.95 | 0.552 | 1.35 | 0.448 |
| 0.56 | 0.620 | 0.96 | 0.550 | 1.36 | 0.445 |
| 0.57 | 0.618 | 0.97 | 0.548 | 1.37 | 0.441 |
| 0.58 | 0.617 | 0.98 | 0.546 | 1.38 | 0.438 |
| 0.59 | 0.615 | 0.99 | 0.544 | 1.39 | 0.434 |
| 0.60 | 0.614 | 1.00 | 0.542 | 1.40 | 0.431 |
| 0.61 | 0.612 | 1.01 | 0.539 | 1.41 | 0.427 |
| 0.62 | 0.610 | 1.02 | 0.537 | 1.42 | 0.423 |
| 0.63 | 0.609 | 1.03 | 0.535 | 1.43 | 0.418 |
| 0.64 | 0.607 | 1.04 | 0.533 | 1.44 | 0.414 |
| 0.65 | 0.606 | 1.05 | 0.531 | 1.45 | 0.410 |
| 0.66 | 0.604 | 1.06 | 0.528 | 1.46 | 0.406 |
| 0.67 | 0.602 | 1.07 | 0.526 | 1.47 | 0.401 |
| 0.68 | 0.601 | 1.08 | 0.524 | 1.48 | 0.397 |
| 0.69 | 0.599 | 1.09 | 0.522 | 1.49 | 0.393 |
| 0.70 | 0.597 | 1.10 | 0.519 | 1.50 | 0.389 |
| 0.71 | 0.596 | 1.11 | 0.517 | 1.51 | 0.384 |
| 0.72 | 0.594 | 1.12 | 0.514 | 1.52 | 0.379 |
| 0.73 | 0.592 | 1.13 | 0.512 | 1.53 | 0.374 |
| 0.74 | 0.591 | 1.14 | 0.509 | 1.54 | 0.369 |
| 0.75 | 0.589 | 1.15 | 0.507 | 1.55 | 0.364 |
| 0.76 | 0.587 | 1.16 | 0.504 | 1.56 | 0.358 |
| 0.77 | 0.585 | 1.17 | 0.502 | 1.57 | 0.352 |
| 0.78 | 0.584 | 1.18 | 0.499 | 1.58 | 0.347 |
| 0.79 | 0.582 | 1.19 | 0.497 | 1.59 | 0.341 |


Copyright © 2012 IEEE. All rights reserved.

Copyright The Institute of Electrical and Electronics Engineers, Inc.
Provided by IHS under license with IEEE
No reproduction or networking permitted without license from IHS

Order Number: 02120914
Sold to:EGAT [700166108393] - VARRIS.Y@EGAT.CO.TH,
Not for Resale,2016-09-15 03:57:44 UTC

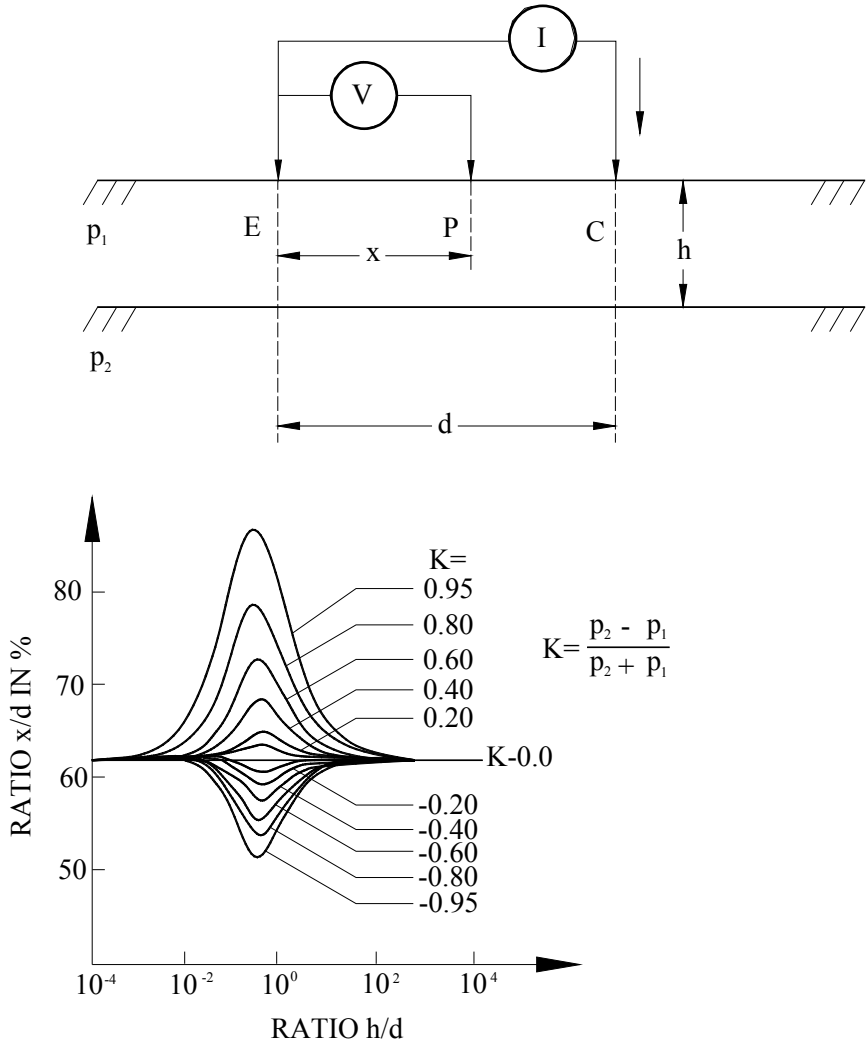


**Figure 8—Required potential electrode position in a two layer earth**

#### 8.2.2.4.1 Interpretation of the results

In the case of the fall-of-potential method for a given current probe location, there is one potential probe spacing that gives the true ground impedance of the ground being tested. However, the correct spacing can be very difficult to determine, especially if the ground grid has a complex shape (see Curdts [B18], Dawalibi and Mukhedkar [B20], and Dawalibi and Mukhedkar [B22] for additional information). The correct spacing is also a function of the soil configuration, as demonstrated in Dawalibi and Mukhedkar [B20] and illustrated by Figure 8, which is applicable to small ground systems. As indicated in Figure 8, the required potential probe spacing $x$ (when the probe is between E and C and when the soil is uniform) is such that the ratio $x/d$ = 0.618. This was first proved by Curdts [B18] for small hemispherical electrodes. See Annex C.

The preceding statements show that to apply the 62% rule, the following conditions need to exist:

a) A fairly uniform soil.


Copyright © 2012 IEEE. All rights reserved.

Copyright The Institute of Electrical and Electronics Engineers, Inc.
Provided by IHS under license with IEEE
No reproduction or networking permitted without license from IHS

Order Number: 02120914
Sold to:EGAT [700166108393] - VARRIS.Y@EGAT.CO.TH,
Not for Resale,2016-09-15 03:57:44 UTC

b) Large distances between the ground grid under test and reference electrodes so that all the electrodes can be assumed to be hemispherical.

c) The electrode under test has no external ground connections.

Also, the reference origin for measuring the distances of the auxiliary electrodes (current and voltage probes) is needed. For hemispherical grounds, the origin is the center of the ground. For large ground systems, some authors introduce the concept of *electrical center* and describe the method of determining the impedance of the extensive grounding systems imbedded in a uniform soil (Thug [B61]). The user should note that for a large and complex ground grid system, the *electrical center* might not be the same as the geometrical center of the ground grid. Unlike the geometrical center, the location of the electrical center largely depends on the current density profile in and around the ground grid conductors.

The fall-of-potential test measures the resistance between a point in the ground grid and remote earth. If a test value is much higher than expected, then the test leads may have been attached to a conductor that was inadequately connected to the ground grid. If a poor connection is suspected, then measurements can be repeated at other points in the ground grid. If the original and repeated values vary dramatically, then the ground grid may be damaged and a ground integrity test of the ground grid may be appropriate. Alternatively, continuity tests may be performed prior to performing the fall-of-potential test.

In general, the best way to obtain a satisfactory measurement is to achieve spacing between the ground grid and the current probe (Figure 6) such that all mutual resistances are sufficiently small and the fall-of-potential curve levels out (Figure 7). The main advantage of the fall-of-potential method is that the potential and current electrodes can have a substantially higher resistance than the ground being tested without significantly affecting the accuracy of the measurement.

#### 8.2.2.5 Resistance measurements by clamp-on or stakeless method

The clamp-on meter measures the resistance of a grounding electrode by clamping onto the down lead wire, as illustrated in Figure 9. When turned on, the clamp-on meter induces a voltage with a defined frequency, usually between 1 kHz and 3.4 kHz, into the integrated ground system, including the grounding electrode under measurement. The induced voltage causes a current ($I_{test}$) to flow into the multigrounded system, which is measured by the meter. The voltage-to-current ratio (impedance) is then determined and displayed in digital format by the meter. The method is based on an assumption that the impedance of the multigrounded neutral (or shield) system, excluding the ground electrode under test, is so small compared to the ground electrode under test, that it can be assumed to be zero ($Z_{eq} = 0$). With this assumption, the indicated reading approximates the resistance of the ground electrode when properly used.

The accuracy of the clamp-on device is predicated on the proper mating and alignment of the jaws. Clamp-on meters require frequent calibration to assure proper operation.

Although this method is practical and widely used for transmission and distribution lines, its theory lends itself to some application limitations as listed as follows:

a) The application is limited to a ground electrode connected to a relatively low impedance grounding system.

b) A large error can be introduced into the test measurement if the inductive reactance of the multigrounded shield or neutral system under test is significant compared to the resistance being measured. This is particularly true of clamp-on devices that require high test frequencies of 1 kHz to 3.4 kHz to maintain their compact shapes, assuming no effort is made to account for the reactance in the test circuit. The high frequency injected into the test circuit will increase the reactive impedance of the circuit and can greatly distort the test readings if the inductance is significant.


Copyright © 2012 IEEE. All rights reserved.

Copyright The Institute of Electrical and Electronics Engineers, Inc.
Provided by IHS under license with IEEE
No reproduction or networking permitted without license from IHS

Order Number: 02120914
Sold to:EGAT [700166108393] - VARRIS.Y@EGAT.CO.TH,
Not for Resale,2016-09-15 03:57:44 UTC

c) Corroded splices or connections on the neutral (or shield wire) system can influence the reading. Typically, an open shield or neutral wire is indicated by the meter, however.

d) The method is not applicable to a multiple-connected ground electrode system, such as a substation ground grid, multiconnected pole, or structure grounds. Disconnect multiconnected pole or structure grounds, except at the measuring leg. Be sure any ground lead is disconnected in a safe manner.

e) High-frequency noise in the system can influence the reading. A high noise-to-signal ratio can occur during the measurement of a high-resistance ground.

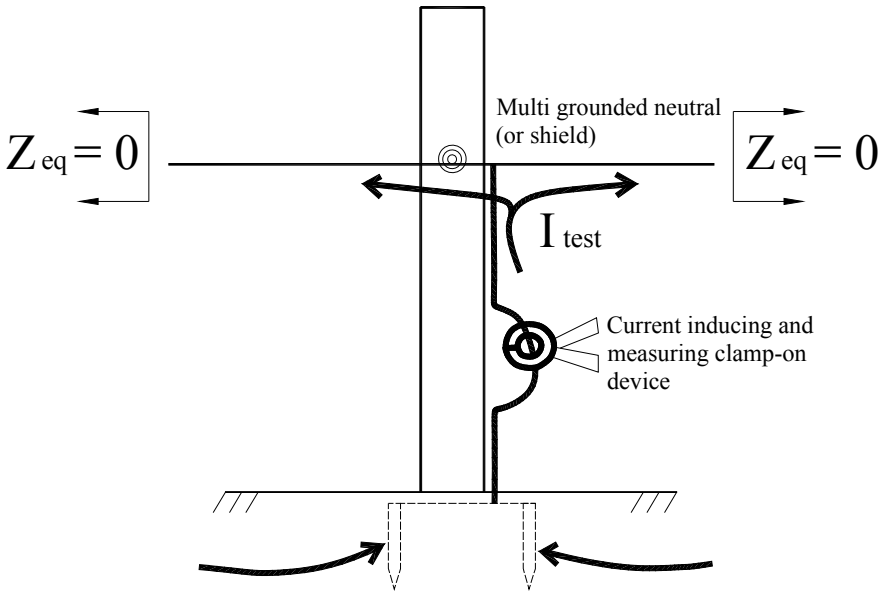


**Figure 9—Resistance measurement by clamp-on (stakeless) method**

For more information concerning the limitations and accuracy of clamp-on meters, see Annex E.

### 8.2.2.6 Resistance measurements by FOP/clamp-on method

A stand-alone resistance of a ground electrode can also be measured by combining the fall-of-potential method and clamp-on method, as shown in Figure 10. The current and voltage probes are placed in the same way as required for the FOP method. In addition to passing the current into the grounding system, a clamp-on CT measures the portion of the test current that flows into the grounding system. A ratio of the measured voltage to measured ground current then determines the stand-alone resistance of the grounding system.

The FOP/clamp-on method is often used when measuring the resistances of multilegged or guyed transmission line structures that do not have dedicated ground electrode systems. For measuring the current flowing in the ground, a large split-core CT is used, as shown in Figure 10. In the case of a four-legged tower, the resistance of each leg is measured separately before combining them to determine the overall resistance of the structure. Recently, a device has been developed that allows the measurement of all four resistances simultaneously.

Similar to the clamp-on method, high-frequency noise in the system can influence the reading. A high noise-to-signal ratio can also occur during the measurement of a high-resistance ground.


Copyright © 2012 IEEE. All rights reserved.

Copyright The Institute of Electrical and Electronics Engineers, Inc.
Provided by IHS under license with IEEE
No reproduction or networking permitted without license from IHS

Order Number: 02120914
Sold to:EGAT [700166108393] - VARRIS.Y@EGAT.CO.TH,
Not for Resale,2016-09-15 03:57:44 UTC

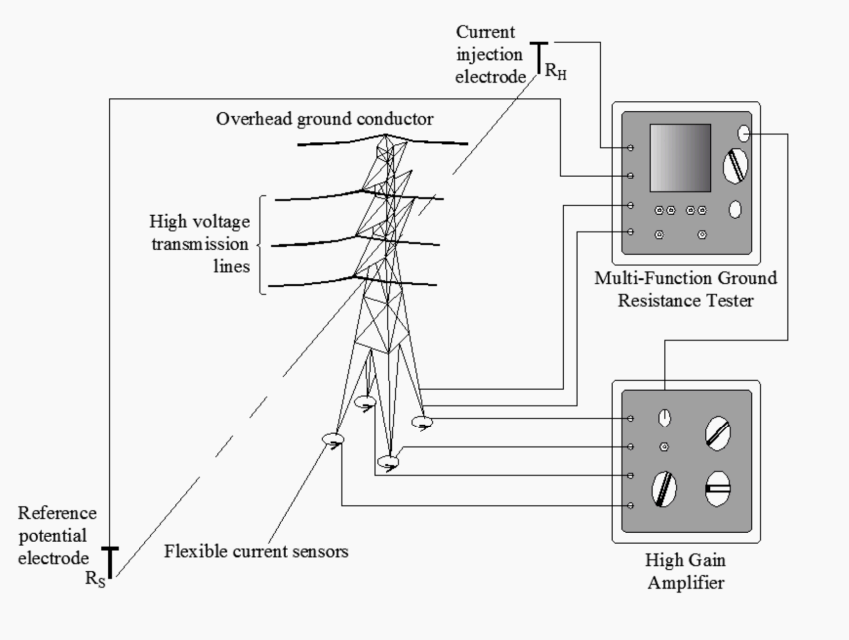


**Figure 10—Tower testing ground resistance system using FOP and leakage current measurements**

### 8.2.2.7 Ground impedance measurement by computer-based grounding multimeter

A computer-based grounding multimeter was developed (Meliopoulos et al. [B47]) with the ability to characterize the impedance of an isolated or integrated ground system. The test involves installing one current returning and six voltage-sensing electrodes (via a pair of tricoaxial leads, each connected to three electrodes), as shown in Figure 11. The current return electrode is placed at a distance of at least two times the longest substation dimension. The first voltage probe in each string is typically placed at a 15 m (50 ft) distance from the substation fence. The distances of the remaining voltage probes are then automatically fixed from the first probe. For better accuracy, voltage probes are located as far from other ground structures (such as, pole grounds, pipes, etc.) as possible.

Generally, these types of multimeters present the user with the following measurement options:

a) Ground impedance (isolated or interconnected grounding system of a tower, pole, or substation)
b) Soil resistivity
c) Tower ground impedance (stand-alone tower/pole ground impedance without disconnecting shield or neutral wires)
d) Touch voltage
e) Step voltage
f) Ground mat impedance (stand-alone substation ground impedance without disconnecting shield and neutral wires)
g) Transfer voltage
h) Low impedance/continuity (substation ground grid conductor integrity test)

Based on the selected measurement option, the user then inputs several parameters, including the type and size of the grounding system (ground rods, counterpoises, or ground grid) and approximate coordinates for current and voltage electrodes. During the test, the power supply unit injects continuous pulses (white noise) between the grounding electrode under test and the return electrode. The current


Copyright © 2012 IEEE. All rights reserved.

Copyright The Institute of Electrical and Electronics Engineers, Inc.
Provided by IHS under license with IEEE
No reproduction or networking permitted without license from IHS

Order Number: 02120914
Sold to:EGAT [700166108393] - VARRIS.Y@EGAT.CO.TH,
Not for Resale,2016-09-15 03:57:44 UTC

pulses are injected for a short duration, typically for 0.5 s. In the ground impedance mode, ground potential differences (GPDs) are measured by six voltage electrodes. The computer software then processes the measured current and GPDs and performs the following:

- Noise filtering
- Correction of voltage and current transducer errors
- Estimation of ground electrode impedance and soil factor by solving a 2 by 6 equation matrix using weighted least square method
- Displays a ground impedance (magnitude and phase angle) versus frequency plot on the screen

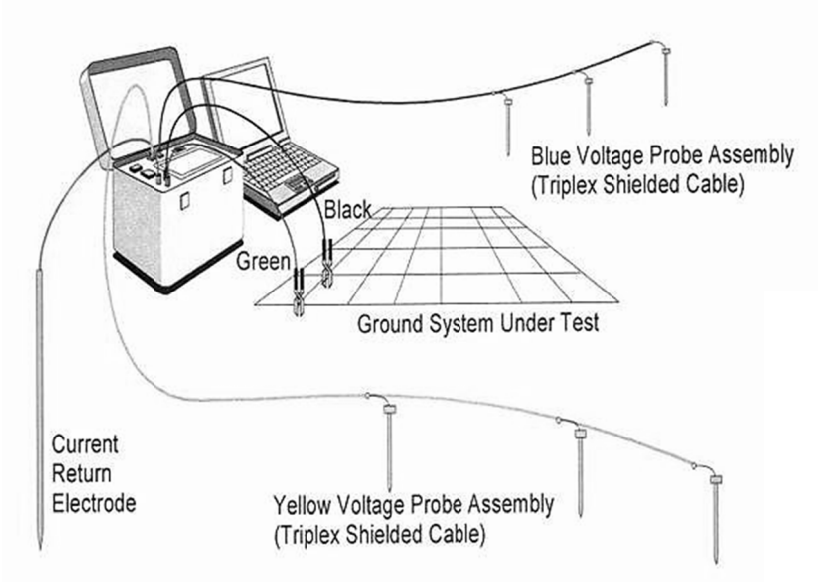


**Figure 11—Ground impedance measurement by computer-based ground multimeter**

In other areas, as follows, the computer method has similar limitations as the FOP method that can influence the accuracy of the data:

- Voltage and current probe distances are measured from an assumed electrical center, and as a result, the impedance of an interconnected grounding system is not accurately determined.
- The measured impedance value can vary with changes in voltage and/or current probe locations. However, the method provides a range of error along with the impedance value. The method claims that the true value of impedance is enclosed by this ± range.

# 9. Testing earth potentials and step and touch voltages

## 9.1 Purpose

Local potential differences can be measured to perform the following:

a) Review the step and touch voltages at an existing station for comparison with tolerable body withstand values.
b) Confirm design calculations of step and touch voltages in a new station. These voltages can be different from the measured values due to various approximations in the modeled system.


Copyright © 2012 IEEE. All rights reserved.

Copyright The Institute of Electrical and Electronics Engineers, Inc.
Provided by IHS under license with IEEE
No reproduction or networking permitted without license from IHS

Order Number: 02120914
Sold to:EGAT [700166108393] - VARRIS.Y@EGAT.CO.TH,
Not for Resale,2016-09-15 03:57:44 UTC

In general, a substation ground grid is designed to limit step and touch voltages on and around the yard within the tolerable limits. Depending on the assumptions made in the design, the actual step and touch voltages during the fault might differ from the designed values. A better assurance that a substation ground grid meets its design objectives would come from actually measuring step and touch voltages by injecting a known amount of current in the ground mat from a remote ground electrode and measuring the resulting voltage gradients. The actual magnitudes of step, touch, and transfer voltages can then be determined by scaling up for the substation fault current.

## 9.2 Types of step and touch voltages

The following list outlines the different types of step and touch voltages:

a) Step voltage—general definition

The difference in surface potential that could be experienced by a person bridging a distance of 1 m with the feet without contacting any grounded object.

b) Touch voltage—general definition

The potential difference between the GPR of a grounding grid or system and the surface potential where a person could be standing while at the same time having a hand in contact with a grounded structure or object. Various types of touch voltages are as follows:

1) Structure touch voltage

The structure touch voltage is measured between a grounded structure (or metallic object inside the substation) and the soil surface within 1 m (arm touch) distance. The maximum usually occurs at structures near the edge of the grid.

2) Mesh touch voltage

The mesh touch voltage is measured between the ground grid and the soil surface within the footprint of a grid mesh. The maximum usually occurs near the center of a mesh on the periphery of the grid.

3) Fence touch voltage

The fence touch voltage is measured between a metallic fence and the soil surface within 1 m (arm touch distance). For a grounded fence, the maximum usually occurs on the exterior at a corner farthest from the center of the grid. For an isolated fence, the maximum can also occur on the interior at a point close to the grid.

4) Gate touch voltage

The gate touch voltage is the maximum potential difference between a metallic gate and the soil surface within 1 m (arm touch distance) for any swung position of the gate. Many gates swing through an arc of radius 3 m, so points within 4 m of the closed position need to be checked. Otherwise, gradient control mats might not adequately moderate gate touch potentials around a swing gate when the gate is in the open position.

5) Station transferred touch voltage

The station transferred touch voltage is the maximum potential difference between the ground grid and the soil within 1 m (arm touch distance) of a metallic object exterior to the grid but bonded to the grid. Examples include a case-grounded power tool used beyond the grid, the sheath of bonded power cables on a riser pole, the external shutoff valve for a water supply pipe bonded to the grid, or a railway track bonded to the grid.


Copyright © 2012 IEEE. All rights reserved.

--`,,,,,,`,`-`-`,,`,,`,`,,`---

Copyright The Institute of Electrical and Electronics Engineers, Inc.
Provided by IHS under license with IEEE
No reproduction or networking permitted without license from IHS

Order Number: 02120914
Sold to:EGAT [700166108393] - VARRIS.Y@EGAT.CO.TH,
Not for Resale,2016-09-15 03:57:44 UTC

6) Remote transferred touch voltage

The remote transferred touch voltage is the maximum potential difference between a remotely bonded metallic object and the soil within 1 m (arm touch distance) in proximity to a station. Examples include a water faucet at a neighboring residence bonded to the multigrounded distribution neutral or a remotely referenced telephone cable sheath.

## 9.3 Measurement procedure (general)

The steps for the measurement procedure are as follows:

a) Test current is circulated between a remote point and the grid being tested to simulate a fault condition. Local potential differences are usually tested along with the station ground impedance. See Clause 8 for more details regarding the injection of test current.

b) The potentials can be measured differentially using a twisted wire pair attached to two probes (step voltage) or attached to one probe and a clip to a nearby metallic structure (touch voltage). The step voltage can also be obtained by making two touch voltage measurements at locations 1 m apart and taking the difference between the measured touch voltages.

c) Be sure the probes make good contact with the underlying soil. A separate battery-powered ac ohmmeter can be configured to measure the resistance between the probe and the station ground to confirm that its resistance is small compared to the input impedance of the main test instrument.

d) Relatively thin rods (6 mm diameter) are much easier to drive than permanent ground rods (18 mm diameter) and provide nearly the same resistance at a given depth. Use rods that are rigid, smooth, and corrosion resistant. Penetration into the moist subsoil is usually sufficient (typically 150 mm). Terminal connections as provided on some manufactured rods can be difficult to maintain; a battery clip attached to the test lead works well.

e) Wireless communications between the person placing the probes and the person making the measurements helps to speed up the testing.

f) Using a tape measure and placing several probes, or using a global positioning system unit, reduces positional errors.

g) The step or touch voltage is normally measured as a voltage relative to a remote earth potential probe or relative to the ground grid, and the test current is recorded. The measured voltages are then scaled by the fault current that might enter the interconnected grounding system to determine the touch or step voltage.

h) To assess safety, the measured touch and step voltages are compared with the tolerable voltage limits as defined by IEEE Std 80. As defined, these limiting voltages depend on the tolerable current limit, the resistance under the feet, and the duration of the fault.

i) Yard surface stone often deteriorates due to intrusion by underlying clay, weed growth, or contamination by fines. A resistivity test of the surface material (see Annex D) will help to establish the tolerable voltage limits.

## 9.4 Methods of measuring step, touch, and transfer voltages

### 9.4.1 Staged fault test

Grounding measurements made with a full phase-to-ground fault current in a substation provide the most accurate step, touch, and transfer voltage data. However, this type of test is rarely performed unless some other, more demanding reason such as determination of circuit parameters, equipment performance, and protection characteristics exists for the tests. The staged fault test is performed in the same manner as described in Clause 8, but special care and advance preparation is required to conduct the test safely.


Copyright © 2012 IEEE. All rights reserved.

Copyright The Institute of Electrical and Electronics Engineers, Inc.
Provided by IHS under license with IEEE
No reproduction or networking permitted without license from IHS

Order Number: 02120914
Sold to:EGAT [700166108393] - VARRIS.Y@EGAT.CO.TH,
Not for Resale,2016-09-15 03:57:44 UTC

### 9.4.2 Current injection or low-voltage fault test (Patel [B52])

The current injection method involves passing a power frequency test current in the range of 100 A to 200 A between the ground grid and a remote ground grid or ground electrode as illustrated in Figure 12 and Figure 13. With the test current continuously flowing in the ground grid, the current distribution, GPR, and various voltage gradients are measured. Sometimes, measurements include currents through a 1000 Ω or 500 Ω resistance to simulate a human body. Finally, the measured voltages and currents are scaled up by multiplying the measured values by the ratio of the substation fault current to test current.

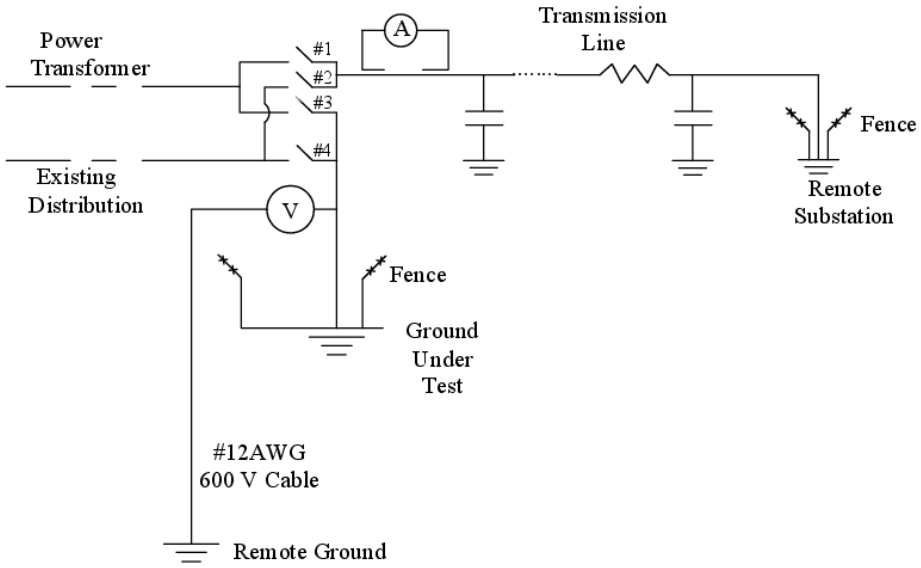


**Figure 12—Single-line diagram for typical current injection or low-voltage fault test**

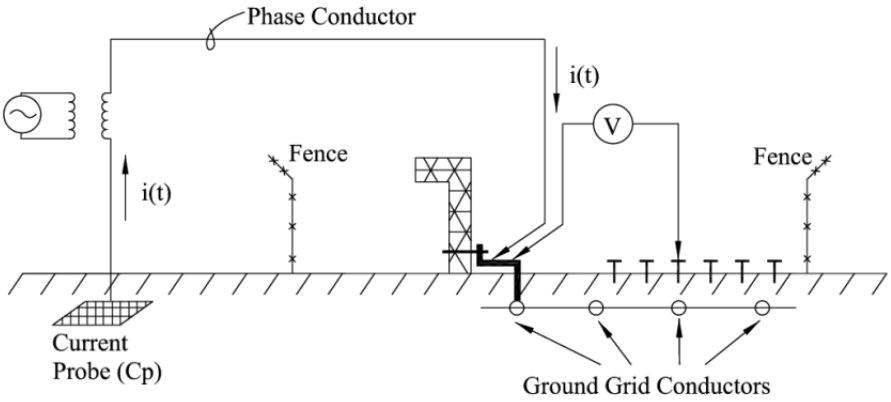


**Figure 13—Typical touch voltage measurement for current injection or low-voltage fault test**


Copyright © 2012 IEEE. All rights reserved.
Copyright The Institute of Electrical and Electronics Engineers, Inc.
Provided by IHS under license with IEEE
No reproduction or networking permitted without license from IHS
Order Number: 02120914
Sold to:EGAT [700166108393] - VARRIS.Y@EGAT.CO.TH,
Not for Resale,2016-09-15 03:57:44 UTC

To perform this test, a transmission or distribution line is typically de-energized. The phase conductors then carry the test current from the source, which can be located either at the remote ground electrode or in the substation under test. The source typically consists of a mobile substation or a temporarily installed power transformer. Another source could be a gasoline-driven ac arc welder or portable generator, with the governor control adjusted to produce currents in the range of a few hundred amperes at a frequency slightly off the power frequency (Dick et al. [B25]). The arc welder technique can be used to avoid interference from stray power frequency currents.

Assuming fixed system-generated voltages on the ground grid, this test can be applied without deenergizing the entire substation by modifying the test measurements (Zohdy [B63]). The presence of interfering power frequency currents and harmonics are eliminated by reversing current flow using switches 1 through 4 on the output side of the source (Figure 12). The switch enables a tester to obtain three separate measurements for each grounding parameter as listed as follows:

a) With no test current ("0" polarity)
b) With test current in one direction with respect to the interfering current ("a" polarity)
c) With test current in opposite direction with respect to the interfering current ("b" polarity)

An accurate value of the measured parameter is obtained by applying Equation (9) or Equation (10).

For illustration purposes, these equations show only the test current and touch voltage parameters, respectively:

$$I_{tst} = \sqrt{\left( \frac{{I_{tst(a)}}^2 + {I_{tst(b)}}^2}{2} - {I_{tst(0)}}^2 \right)} \tag{9}$$

$I_{tst\ (0)}$ = Unbalanced current in the transformer neutral with no current flowing in the test circuit:

$$V_t = \sqrt{\left( \frac{{V_{t(a)}}^2 + {V_{t(b)}}^2}{2} - {V_{t(0)}}^2 \right)} \tag{10}$$

Making three measurements for each variable might not be practical. In such cases, selecting a sufficiently high test current magnitude compared to interfering noise can minimize the test duration.

### 9.4.3 Measurement with conventional ground meter

Several types of ground testers are available in the market to perform fall-of-potential tests. Most of these are battery-operated instruments producing ac current of varying frequencies. A typical device injects the current through the current reference probe and measures the resulting voltage gradient through the voltage reference probe. The output from such a device is a voltage-to-current ratio (impedance) in terms of ohms.

The devices that are currently available have the following display ranges:

— 0 V to 50 V
— 0 mA to 250 mA
— 40 Hz to 500 Hz (50 Hz and 60 Hz are omitted)
— 20 mΩ to 300 kΩ


Copyright © 2012 IEEE. All rights reserved.

Copyright The Institute of Electrical and Electronics Engineers, Inc.
Provided by IHS under license with IEEE
No reproduction or networking permitted without license from IHS

Order Number: 02120914
Sold to:EGAT [700166108393] - VARRIS.Y@EGAT.CO.TH,
Not for Resale,2016-09-15 03:57:44 UTC

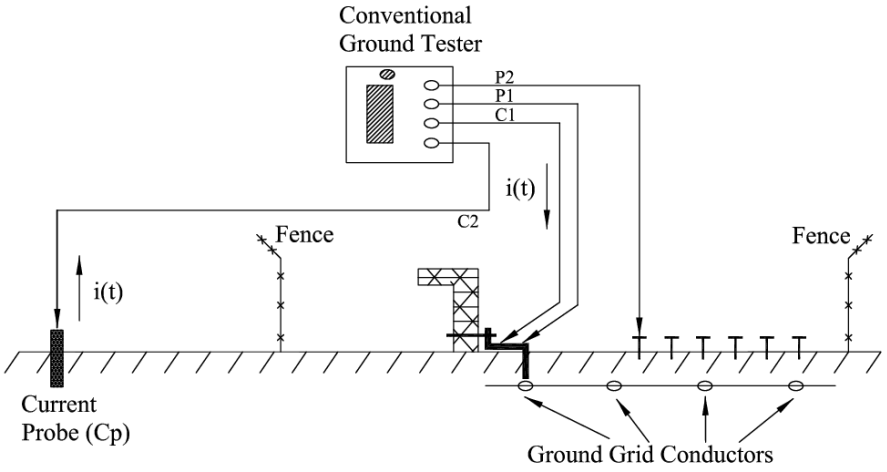


**Figure 14—Touch voltage measurements by conventional ground test meters**

Using a ground tester for measuring the impedance of a ground electrode system is a widely accepted practice in the electric utility industry. On the other hand, its use for measuring step, touch, or transfer voltages is rare. However, if desired, one can measure the voltage gradients on or around a substation yard provided the ground tester is capable of injecting sufficient current at a frequency other than 50 Hz or 60 Hz frequencies. The subsequent paragraphs describe the application of conventional ground testers to measure the step, touch, and transfer voltages on or around a grounding electrode system.

Figure 14 illustrates the application of a conventional ground tester to measure touch voltages over a substation yard. The ground tester, when connected as shown, measures impedance ($V_{touch}$/ampere) between the ground grid and a point of investigation in the yard. Multiplying the measured impedance value with the estimated fault current in the substation then determines the touch voltage at the point of investigation. The step voltage is typically determined by calculating the difference between the two touch voltage data points obtained 1 m apart.

The distance between the current probe and the ground grid significantly influences the touch voltage data when a conventional ground meter is employed. The guidance for locating the current probe, as provided in Clause 8, will improve the accuracy of the test. If the distance between the current probe and the ground grid is inadequate, then the measured touch voltages will be less than their true values.

### 9.4.4 Measurement of touch and step voltages using a computer-based grounding multimeter

The basic function of a computer-based device is described in Clause 8. A single line diagram in Figure 15 illustrates how the device is used for measuring step and touch voltages (Meliopoulos et al. [B48]). Using the same setup, transfer voltages can also be determined. In the touch voltage measuring mode, the injection of the current and the measurement of six GPDs remain the same with the exception of locating the GPD probes at the desired touch voltage points. As mentioned, all the current and voltage measurements are processed with software, which rejects external noise using the correlation method. Subsequently, estimation methods are used to compute the touch voltages. Each output consists of six touch voltages normalized with the substation fault current that a user inputs in the computer prior to starting the measurements.


Copyright © 2012 IEEE. All rights reserved.
Copyright The Institute of Electrical and Electronics Engineers, Inc.
Provided by IHS under license with IEEE
No reproduction or networking permitted without license from IHS
Order Number: 02120914
Sold to:EGAT [700166108393] - VARRIS.Y@EGAT.CO.TH,
Not for Resale,2016-09-15 03:57:44 UTC

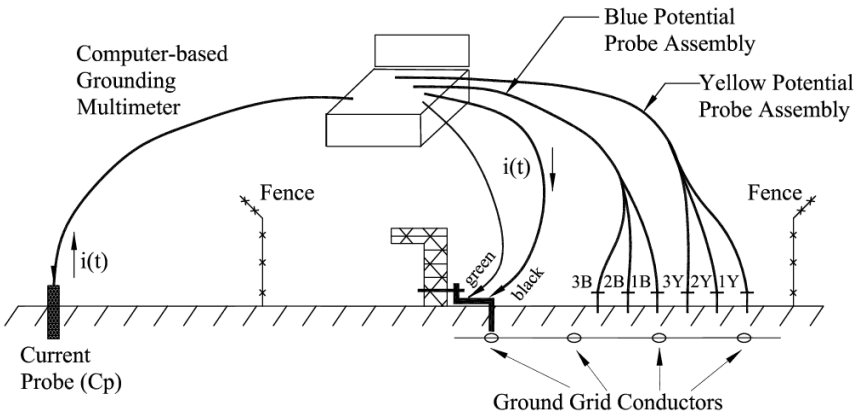


**Figure 15—Touch voltage measurements by computer-based grounding multimeter**

To increase accuracy, the touch voltage estimating algorithms compensate for two critical variables as follows:

a) Proximity of the current return electrode
b) Number of tower grounds connected to the ground mat or specifically the total impedance of other grounds connected to the ground mat

## 9.5 Measurement issues

The measurement of local potential differences can raise the following issues:

a) Some papers have suggested using a conductive shoe to contact the soil surface for measuring the step or touch voltages. This method is likely to fail if the desired contact resistance with the surface is not achieved.
b) Phase angles (if available on the test instrument) do not need to be recorded when measuring differentially between two nearby points. Even when testing sequentially with a single test lead (subtracting two nearby readings), the phase angles tend to be practically the same and can be ignored.
c) Local potential differences tend to be small (a fraction of the ground potential rise) so the test instrument needs to have sufficient resolution (better than 1 mΩ) and good 60 Hz noise cancellation performance.
d) It can be difficult to judge where the highest potentials will occur, given that only a limited number of probe locations can be tested within the available time. Drawings of the grid layout, or underground cable tracing equipment, can be helpful.
e) Seasonal changes in soil moisture can affect the test results. The highest potentials normally occur when the surface soil resistivity is at a maximum. Hilly areas without plant cover and with sand or gravel subsoil sometimes experience the largest changes.
f) The results require adjustment if the injected test current causes different splits in overhead ground wires or interconnected neutrals (for example, due to inductive coupling) than would be present with system fault current.
g) Surfaces finished with asphalt or concrete are difficult to access with probes. It might be possible to find adjacent accessible areas having a similar offset from nearby buried grounding conductors that can provide a similar step or touch voltage.
h) Errors can be introduced due to potential differences present across the grid. These errors are most likely to occur close to where the test current generator is connected to the ground grid.


Copyright © 2012 IEEE. All rights reserved.

Copyright The Institute of Electrical and Electronics Engineers, Inc.
Provided by IHS under license with IEEE
No reproduction or networking permitted without license from IHS

Order Number: 02120914
Sold to:EGAT [700166108393] - VARRIS.Y@EGAT.CO.TH,
Not for Resale,2016-09-15 03:57:44 UTC

i) When the main test instrument is portable (e.g., a battery-powered ac ohmmeter), it is possible to take the readings at the probe location. Here, a two-conductor cable connected to meter terminals *C*1 and *C*2 can transfer the test current back to the remote injection test lead and the local grid connection. This method expedites finding the highest gradient in a given area.

j) Locating the current probe at a sufficient distance from the ground grid being investigated is crucial in producing accurate results. For better accuracy, this distance needs to be at least five times the largest dimension of the grounding grid.

# 10. Integrity of grounding systems

## 10.1 General

Ground impedance and ground continuity measurements are typically performed to verify the adequacy of a newly installed ground grid and, thereafter, to reconfirm its condition periodically. The purpose of these tests is to verify that a proper ground grid has been installed and has been maintained throughout its service life. The reason for having a properly designed, installed, and maintained grounding grid is to eliminate the shock hazards and abnormal operating conditions that can arise due to fault currents. To verify that there is a low-resistance path for ground currents, all accessible ground leads need to be inspected, and those that are buried under the earth's surface need to be tested periodically.

There are no specific code requirements for testing of grounding systems. However, NFPA 70E-2012 [B49] requires the path to ground from circuits, equipment, and enclosures to be permanent, continuous, and effective. Also, Part III of NFPA 70E-2012 [B49] requires that the equipment and enclosure bonding shall be maintained. In addition, the Occupational Safety and Health Administration (OSHA) adopted NFPA 70E-2012 [B49] as a specific OSHA safety requirement for employees in the workplace.

Lightning or fault-related surges are known to cause damage to sensitive electronic circuits in the control house if its ground is poorly tied to the rest of the substation ground. These types of incidences are even more common at microwave tower sites and weather stations. The ground integrity test, which consists of testing the quality of continuity between two points on the ground grid, is generally performed in such cases. Where safety is a concern, particularly in older substations, the ground integrity test is typically performed before any other tests. Sometimes, for large ground grid systems such as a power plant grounding system, continuity of the grounding system is checked as a quality control measure following construction.

Descriptions of several ground grid integrity test methods are presented in 10.2 through 10.4.

## 10.2 High-current test method

As the name suggests, the purpose of this test is to check the continuity of buried ground conductors and connectors by injecting a high test current. Figure 16 illustrates the test.


Copyright © 2012 IEEE. All rights reserved.

Copyright The Institute of Electrical and Electronics Engineers, Inc.
Provided by IHS under license with IEEE
No reproduction or networking permitted without license from IHS

Order Number: 02120914
Sold to:EGAT [700166108393] - VARRIS.Y@EGAT.CO.TH,
Not for Resale,2016-09-15 03:57:44 UTC

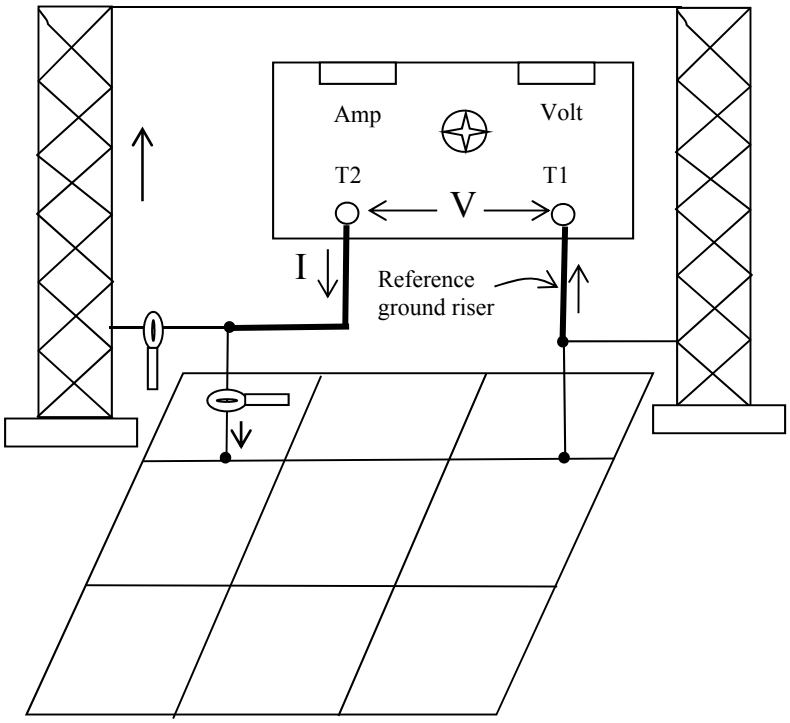


**Figure 16—Ground integrity test using a high-current test set**

A typical test set consists of a variable voltage source (0 V to 35 V, 0 A to 300 A), voltage and current measuring devices, and two test leads. In Figure 16, the T1 test lead is connected to a reference ground riser, generally a transformer case ground, and T2 is connected to the ground riser to be measured. The test consists of a current (typically in the range of 10 A to 300 A) flowing between the connected risers and measuring the voltage drop across the ground circuit including the test leads. The measurement of the current division at the riser being tested using a clamp-on ammeter provides additional data to evaluate the ground path. Keeping the reference riser connected, the second test lead is moved around to test risers at other equipment and structures until the entire substation ground grid is tested.

Sometimes, a cable tracer is employed to locate the unknown or broken ground conductor. The cable tracer detects the magnetic field produced by the test current and generates an equivalent noise, which can be heard through headphones. Absence of the noise is indicative of a broken ground wire or open connection.

It is necessary to measure the voltage drop of the test leads. This measurement is performed by shorting the leads across the test set and measuring the voltage drop by injecting the same test current in the loop. This one-time measurement yields the series impedance of the test leads. It is important to perform this test lead measurement at the end of the test so that the cable temperature, and thus, the cable resistance will be similar to the resistance during the test point measurements. To obtain a correct impedance value, the test lead impedance is subtracted from the measured impedance between the risers. It is also important to avoid loops or coils in the test leads, as this can produce significant inductance and alter the voltage drop. Although the integrity test is the most practical and convenient test to perform, its results can be analyzed only subjectively. One way to evaluate a ground grid is to compare the voltage drops with each other and identify the test risers that have abnormally high impedance values.

One can also evaluate a ground grid by comparing the voltage drop with a known reference value [typically 1.5 V/15 m (50 ft) between test risers] and determining the weak ties between the risers.


Copyright © 2012 IEEE. All rights reserved.

Copyright The Institute of Electrical and Electronics Engineers, Inc.
Provided by IHS under license with IEEE
No reproduction or networking permitted without license from IHS

Order Number: 02120914
Sold to:EGAT [700166108393] - VARRIS.Y@EGAT.CO.TH,
Not for Resale,2016-09-15 03:57:44 UTC

Measured current divisions can indicate whether there is a high impedance or open path in either direction. However, this evaluation method is only valid for fairly dense ground grids, as opposed to spare grids or single grounds to remote devices. More information on this method can be found in Gill [B31].

## 10.3 Measurement of resistance between two risers

This test method is essentially the same as described in 10.2 except that the resistance of the ground path between the tested risers is determined. The schematic in Figure 17 shows the application of this method. The test system injects 25 A to 30 A, 60 Hz current between two ground risers. After measuring the current, the voltage drop across the ground conductor path, and the phase angle between them, the resistance of the grid or ground path is calculated using Equation (11) (Patel et al. [B51]):

$$R_{\text{path}} = \frac{V\text{Cos}\theta}{I} \tag{11}$$

where

$R_{\text{path}}$ is the path(s) resistance between two risers
$V$ is the voltage across two risers
$I$ is the current in the risers
$\theta$ is the phase angle between $V$ and $I$

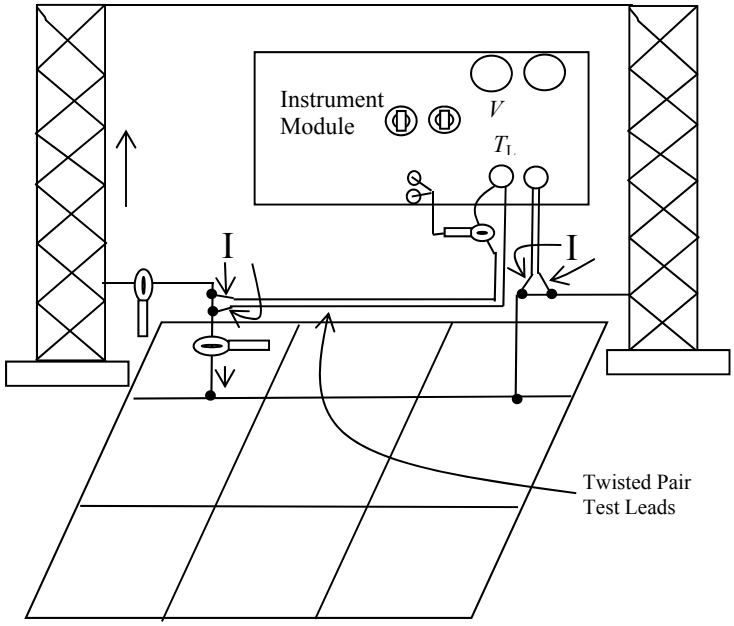


**Figure 17—Ground grid integrity test by measuring the resistance between two risers**

## 10.4 Low-impedance continuity measurement by computer-based grounding multimeter

Subclause 8.2.2.7 describes the basic setup and operation of the computer-based grounding multimeter (Meliopoulos et al. [B46]). One function of the multimeter is to determine the continuity of grounding paths between various risers in a substation or switchyard.


Copyright © 2012 IEEE. All rights reserved.
Copyright The Institute of Electrical and Electronics Engineers, Inc.
Provided by IHS under license with IEEE
No reproduction or networking permitted without license from IHS
Order Number: 02120914
Sold to:EGAT [700166108393] - VARRIS.Y@EGAT.CO.TH,
Not for Resale,2016-09-15 03:57:44 UTC

The voltage and current probe assemblies are installed as shown in Figure 18. In the figure, the black and red current leads are connected between the reference riser and the riser under test, respectively. The red lead is connected through the testing and calibration unit that is supplied with the device. In this configuration, the calibration unit acts as a current limiting resistor of approximately 50 ohms. To connect this resistor, the knob in the front of the testing and calibration unit is turned to the ground impedance mode. If the testing and calibration unit is not available, then a properly rated external resistor can be used.

The voltage between the reference riser and the riser under test is measured through the yellow and green leads, as shown in Figure 18. The configuration shown in Figure 18 will result in a complete characterization of the impedance ($R + jX$) between the reference riser and the riser under test. See Meliopoulos et al. [B46] and Patel et al. [B51].

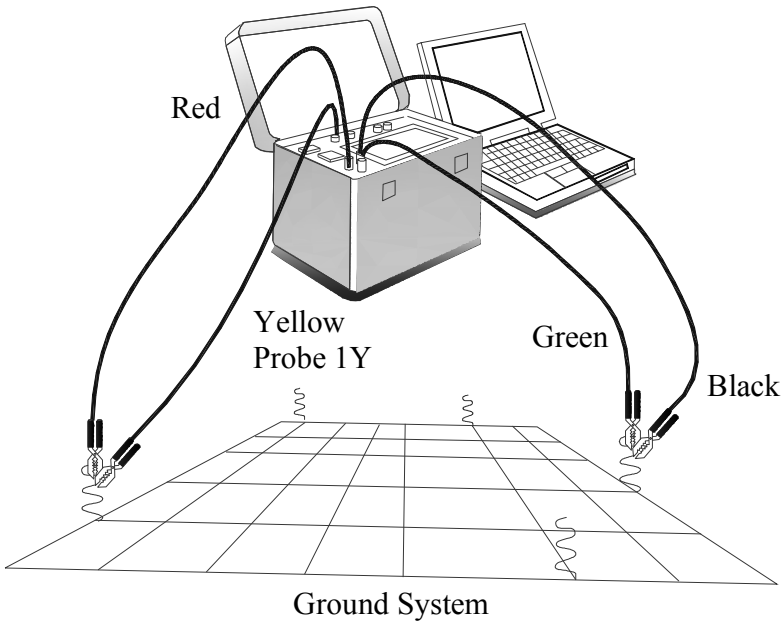


**Figure 18—Ground grid integrity test using computer-based ground multimeter**

## 11. Current splits

### 11.1 Introduction

The extended grounding system of the station might include connections to auxiliary grids, overhead ground wires, distribution system neutrals, high-voltage and communication cable sheaths, metallic pipes, fences, and railway tracks. Measuring current splits in these conductors might be useful for several reasons as follows:

a) Determination of grid current and resistance for comparing with design calculations.
b) Evaluation of grounding connections such as neutral and shield conductors. For example, in urban areas, distribution neutrals tend to be more effective than transmission shield conductors in reducing the integrated impedance of the ground grid.
c) Validation of computer models by measuring current splits.


Copyright © 2012 IEEE. All rights reserved.
Copyright The Institute of Electrical and Electronics Engineers, Inc.
Provided by IHS under license with IEEE
No reproduction or networking permitted without license from IHS
Order Number: 02120914
Sold to:EGAT [700166108393] - VARRIS.Y@EGAT.CO.TH,
Not for Resale,2016-09-15 03:57:44 UTC

d) Determination of shielding or screening factors for overhead ground wires and cables. The ground circuits with higher shielding factors carry more current away from the ground grid, thus, reducing the GPR and resulting step and touch voltages in the substation.

e) Determination of ground grid current helps evaluate the exposure to communication cables before they are installed.

### 11.2 Test considerations

Current splits in parallel ground paths can be measured by using one or more clamp-on or split-core CTs. Typically, the output from the CTs is received by a multichannel data acquisition system. The source current can be supplied by applying either the staged fault method (9.4.1) or the current injection method (9.4.2) (Dick et al. [B25]). In either method, the following are important considerations for the measurements:

a) Because the phase angles can vary significantly between different conductors, provisions need to be made for measuring the current as a vector quantity (magnitude and phase angle). This provision implies measuring a reference variable such as injected current.

b) The CT burden can be local, with transmission of the voltage signal over a thin twisted pair, or it can be at the main test center with transmission of the current signal. For the latter, low-resistance cables will likely be needed to control the total burden of the circuit, depending on the distance. The first method can be more prone to interference, especially if the secondary shunt is too small. A large burden resistance can affect the measurement of the phase angle more than the magnitude. A calibration with test and reference current transformers around the same conductor will check for this possibility.

c) For very small currents, the CT magnetization characteristic can be influenced and alter its calibration. In such a case, the test current can be increased (current injection method).

d) The power frequency interference is likely to be a greater problem in performing the split current measurements compared to voltage gradient measurements, which are not as sensitive to induction from localized circulating currents.

e) Some grounding conductors, such as pipes or high-voltage cables, might be too large for using standard size split-core current transformers. In such cases, CTs with large split cores can be used. Wire wound current transformers can be used provided they are properly calibrated before use. The grid current is typically calculated by subtracting the measured currents in the parallel paths from the total injected current.

## 12. Transient impedance of grounding system

### 12.1 General

The characteristics of a ground system under the impulse conditions of a lightning stroke are important if an effective lightning protection system is to be implemented. It is necessary to confirm that the grounding system provides low ground impedance and not just a low resistance. This is a central point to the philosophy of lightning protection ground system design. The voltage rise (Ground Potential Rise) due to a lightning stroke is dependent not just on the system resistance but also on the reactance of the system. The impulse from a lightning stroke comprises both high- and low-frequency components. The wave shape of the impulse is characterized by a very steep rise in voltage and current followed by a long tail of excess energy content. The voltage and current rise times to peak typically vary between 1 μs to 10 μs for the first stroke, and from 0.1 μs to 1 μs for subsequent restrikes. The high-frequency components are associated with the fast-rising front, while the lower frequency components reside in the long, high-energy tail. Because of this steep rate of current rise, the inductive reactance of the ground system becomes the dominate factor affecting the voltage rise on the system.


Copyright © 2012 IEEE. All rights reserved.

Copyright The Institute of Electrical and Electronics Engineers, Inc.
Provided by IHS under license with IEEE
No reproduction or networking permitted without license from IHS

Order Number: 02120914
Sold to:EGAT [700166108393] - VARRIS.Y@EGAT.CO.TH,
Not for Resale,2016-09-15 03:57:44 UTC

It has been shown (Bellaschi [B11] ,and Devgan and Whitehead [B24]) that the impedance of a simple grounding electrode depends on the amplitude of the impulse current and also varies with time, depending on the impulse form. The nonlinearity of the grounding impedance is caused by local discharges in soil in the area where the electric field gradient exceeds 2.5 kV/cm to 3 kV/cm. Since the field gradient attains the highest value at the ground electrode, the discharges partly short circuit the soil adjacent to the electrode. Consequently, the transient impedance of the grounding system for high-current impulses is lower than the value measured with the conventional steady-state methods, or with an impulse of lower amplitude, which does not produce the discharges in soil.

An opposite effect has been observed in the case of extended ground electrodes, wires, or strips more than 300 m (1000 ft) long, when tested with steep-front impulses. The voltage drop across the grounding impedance then shows a large inductive component. The instantaneous impedance is normally determined as a quotient of the applied transient voltage and current recorded at the same instant. The additional voltage component that appears across the grounding inductance at the steep impulse front (or at an abrupt collapse of the impulse current) is then interpreted as an increase of the grounding impedance.

Traditional ground test instruments operate using a low-frequency ac balanced bridge or other similar methods, and the impedance measured is the resistance nearly equal to dc, thus, not including high-frequency reactance components. Testers used to evaluate the high-frequency reactance of a ground electrode system apply either a high-frequency current in the tens of kHz range or a sharp impulse with a fast rise time (1 μs). The three-point method or the fall-of-potential method test configurations are typically used for this type of tester.

To measure the impedance of a transmission line tower ground using a low-frequency tester and the fall-of-potential method requires the disconnection of the overhead ground wire so as to isolate the tower ground from the network ground of the transmission line.

Studies have been performed by the Georgia Institute of Technology [B29] National Electric Energy Testing and Research Application Center (NEETRAC), and much of 12.2 through 12.4 were prepared by NEETRAC.

## 12.2 Measurement using mobile impulse generator (Georgia Institute of Technology [B29])

The lightning surge impedance of an earth ground system can be measured by injecting a steep-front current surge some distance away and recording the voltage and current waveforms. Surge impedance is typically represented as a resistance and is a high-frequency parameter. Once a traveling wave is set up within a conductive medium, the surge impedance is the predominant parameter. For instance, a television coaxial cable is labeled as having an impedance of 75 Ω. If one were to measure the coaxial cable from end to end with a dc volt-ohm-meter or other low-frequency impedance meter, the reading would be near 0 Ω instead of 75 Ω. However, to a high-frequency signal, the impedance from end to end is 75 Ω. This 75 Ω value is also known as the surge impedance of the coaxial cable. Therefore, to measure a high-frequency parameter, high-frequency measuring techniques are employed.

Once the voltage and current waveforms are recorded, the point in time on the current waveform (peak) where $di/dt$ (slope) = 0 (and, henceforth, $Ldi/dt = 0$) is the point of pure resistance. The value of voltage coincident in time with this point on the current waveform is divided by the value of current. This quotient then equals the surge impedance of the conductive medium. Sometimes the process is complicated by reflections on the waveforms, but for simple systems, the voltage and current waveform peaks are clearly defined as coincident peaks (since the surge impedance is purely resistive). An example of impulse voltage and current for a 2.4 m (8 ft) long × 16 mm (5/8 in) diameter ground rod is shown in Figure 19. As indicated in Figure 19, the surge impedance of the ground rod is about 40 kV divided by 210 A or approximately 190 Ω.


Copyright © 2012 IEEE. All rights reserved.

Copyright The Institute of Electrical and Electronics Engineers, Inc.
Provided by IHS under license with IEEE
No reproduction or networking permitted without license from IHS

Order Number: 02120914
Sold to:EGAT [700166108393] - VARRIS.Y@EGAT.CO.TH,
Not for Resale,2016-09-15 03:57:44 UTC

Figure 20 shows the impulse characteristics of a stand-alone 63 m (206 ft) × 57 m (186 ft) substation ground grid with 55 meshes. In this case, the surge impedance measured about 61 Ω (17 kV divided by 280 A).

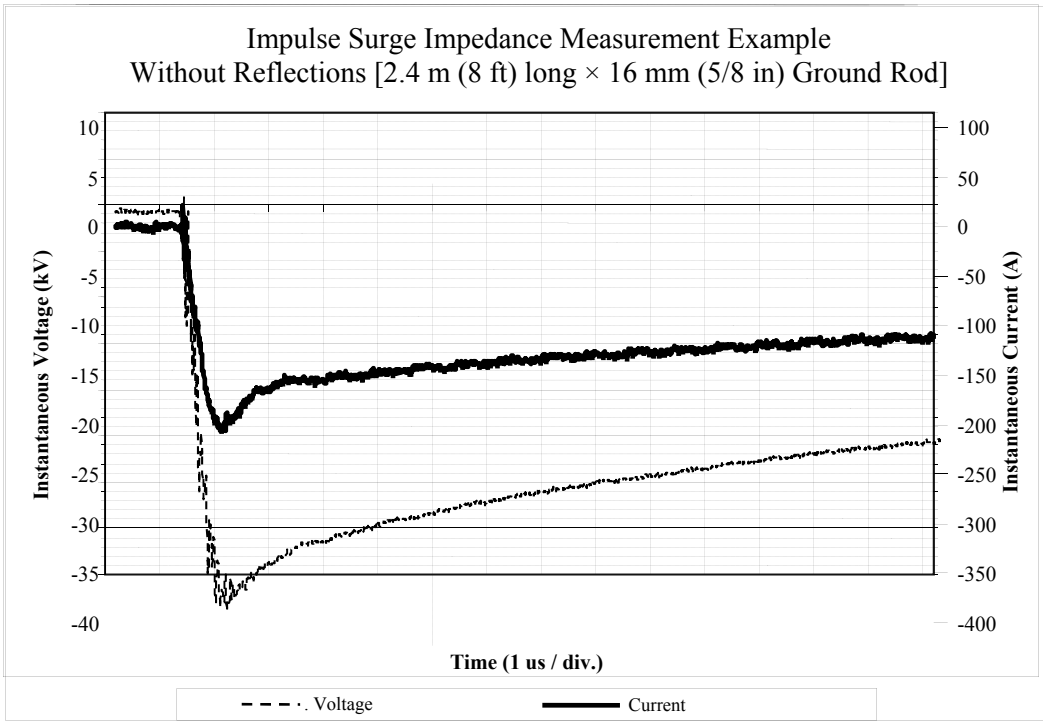


**Figure 19—Example of measured surge impedance of an 2.4 m (8 ft) long × 16 mm (5/8 in) ground rod (Georgia Institute of Technology [B29])**


Copyright © 2012 IEEE. All rights reserved.
Copyright The Institute of Electrical and Electronics Engineers, Inc.
Provided by IHS under license with IEEE
No reproduction or networking permitted without license from IHS
Order Number: 02120914
Sold to:EGAT [700166108393] - VARRIS.Y@EGAT.CO.TH,
Not for Resale,2016-09-15 03:57:44 UTC

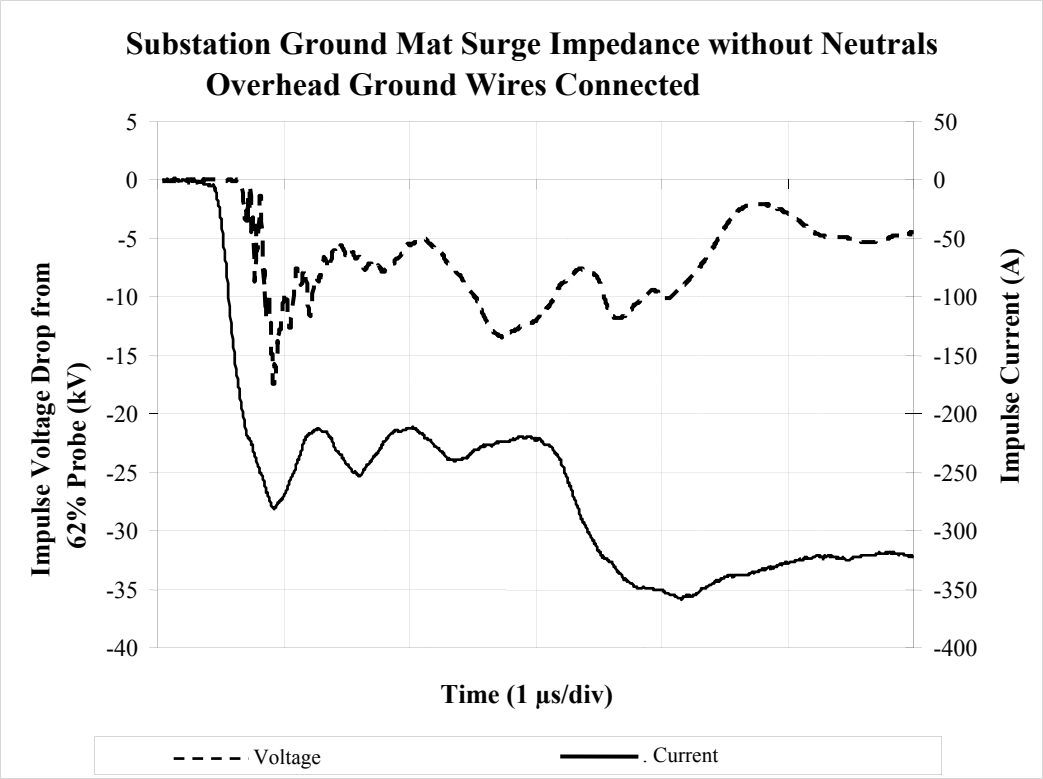


**Figure 20—Example of measured surge impedance of a 63 m (206 ft) × 57 m (186 ft) substation ground grid with 55 meshes (Georgia Institute of Technology [B29])**

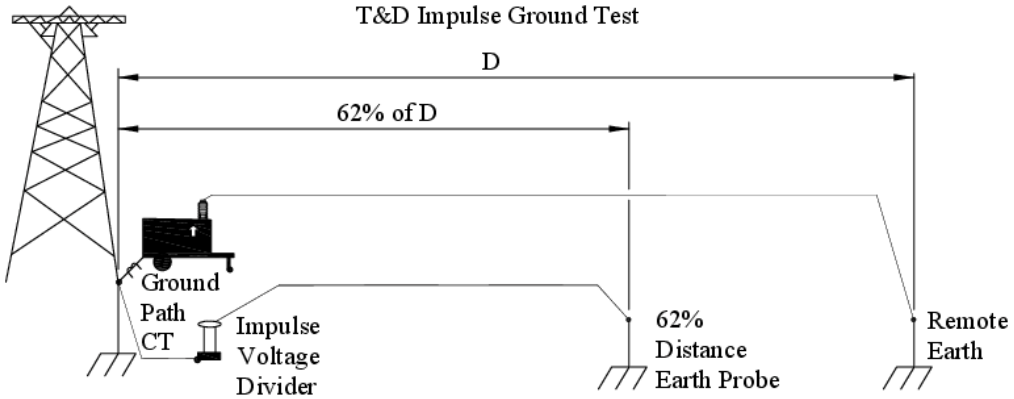


**Figure 21—Setup for T&D ground electrode surge impedance measurements (Georgia Institute of Technology [B29])**

Figure 21 and Figure 22 show typical equipment and instrumentation setups to perform measurements using a mobile impulse generator for transmission tower and substation grounds, respectively. The variations and limitations for leads and reference ground arrangements remain the same as those for the low-frequency FOP tests. However, when using an HV impulse generator, the current and voltage leads are isolated from earth to avoid interferences. Test leads can be easily isolated from earth by hanging


Copyright © 2012 IEEE. All rights reserved.
Copyright The Institute of Electrical and Electronics Engineers, Inc.
Provided by IHS under license with IEEE
No reproduction or networking permitted without license from IHS
Order Number: 02120914
Sold to:EGAT [700166108393] - VARRIS.Y@EGAT.CO.TH,
Not for Resale,2016-09-15 03:57:44 UTC

the leads over polyvinyl chloride (PVC) conduits. Similar to low-frequency tests, impulse current is injected into the earth via the current lead. The current and the voltage waveform are then measured on a digital recorder simultaneously. The impulse current front time is typically set to approximately 0.5 µs. With this steep-front current impulse, a full traveling wave can be set up in approximately 150 m (500 ft).

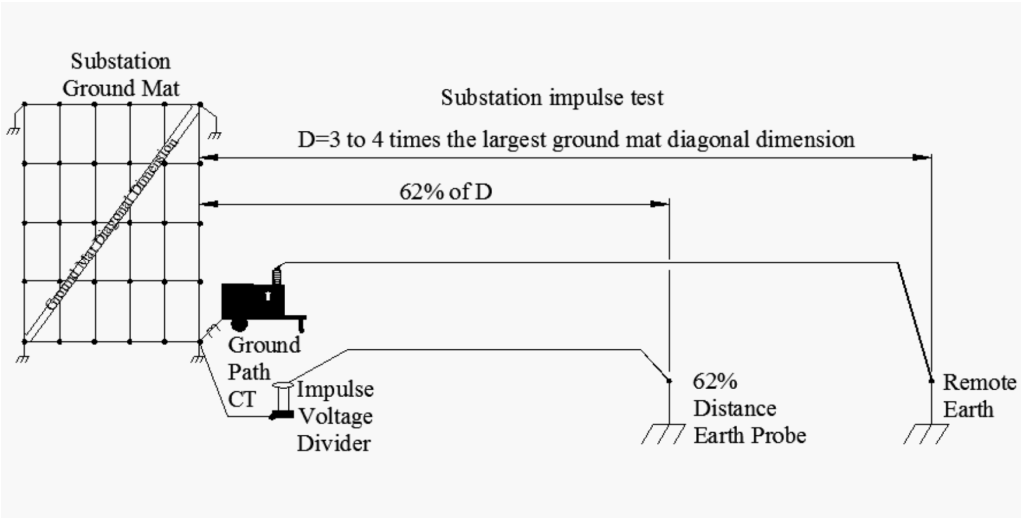


**Figure 22—Setup for substation ground electrode surge impedance measurements (Georgia Institute of Technology [B29])**

## 12.3 Measurement using a broadband meter (Georgia Institute of Technology [B29])

In a test performed by NEETRAC, a set of 20 frequencies between 100 Hz and 1 MHz were used to perform the measurements. The three-point method was performed using manufacturer-provided probes and coaxial test leads.

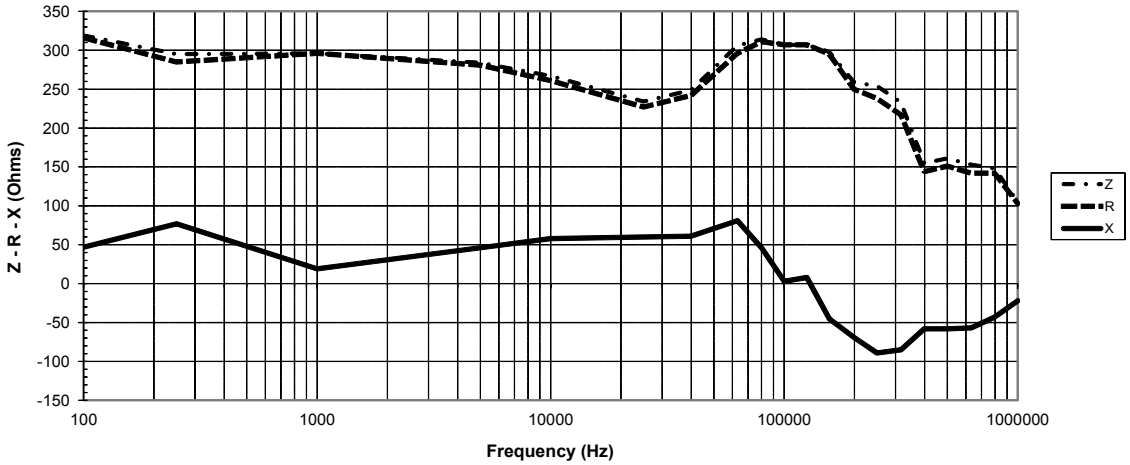


**Figure 23—Example of impulse impedance plot of an 2.4 m (8 ft) long × 16 mm (5/8 in) diameter ground rod using a broad band, impedance measuring meter (Georgia Institute of Technology [B29])**


Copyright © 2012 IEEE. All rights reserved.

Copyright The Institute of Electrical and Electronics Engineers, Inc.
Provided by IHS under license with IEEE
No reproduction or networking permitted without license from IHS

Order Number: 02120914
Sold to:EGAT [700166108393] - VARRIS.Y@EGAT.CO.TH,
Not for Resale,2016-09-15 03:57:44 UTC

An example of the output impedance graph is shown in Figure 23. Frequency is displayed on the horizontal axis, while impedance in ohms is displayed on the vertical axis. The software plots three curves from the processed data: impedance, resistance, and reactance. In this example, the Z-plot is total impedance, the R-plot is resistance, and the X-plot is reactance. For presentation purposes, the reactance has been inverted from that which the software produces. Therefore, positive data shown for the reactance is inductive and negative data is capacitive.

In the above example, the low-frequency ground impedance and resistance are in the 300 Ω range. Around 100 kHz, the reactance crosses zero and the impedance and resistance reach a peak and are equal. The impedance value is a little over 300 Ω at this point. However, note that the reactance will approach another zero crossing a little above 1 MHz. At this point, the impedance and resistance will be around 100 Ω.

## 12.4 Instrumentation

A schematic diagram of the apparatus used is given in Figure 24. The measurement of transient impedance of a driven grounding rod or of a distributed ground system requires specialized equipment, which is normally used in high-voltage laboratories. The high-voltage and high-current impulse is generated by discharge of a large capacitor into an impulse-forming network. Referring to Figure 24, the impulse capacitors are first charged to a high dc voltage. Once charged, the sphere gaps are brought closer to each other until sparking occurs across the gap, generating the desired impulse current and voltage. Although such a circuit can be improvised on the test site, in most practical cases, a mobile impulse generator is used. There are no generally accepted standards for the current impulse form, but the 8/20 μs or 4/10 μs impulse is frequently applied for measurements of the transient grounding impedance.

Apart from the ground to be measured, the test circuit has to have another auxiliary ground that carries the return current to the impulse generator via the ground under test (Figure 21 and Figure 22). This ground is preferably of the distributed type to provide as low an impedance as practically feasible.

The impulse generator is connected to the ground under test through a high-frequency shunt for measuring the impulse current. IEEE Std 4-1995 [B35] provides compliance requirements for the unit response of the shunt. Voltage drop across the resistance of the measured ground is measured by a voltage divider, preferably of the resistive type and designed for the expected voltage range. It is essential to keep the shunt and the divider grounding points directly connected to the auxiliary ground by short, low-inductance leads.

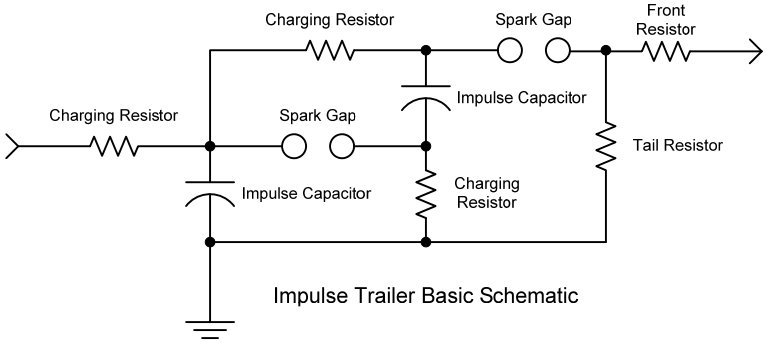


**Figure 24—Basic schematic of impulse generator**

IEEE Std 4-1995 [B35] provides compliance requirements for the divider. Keeping the conductor routed from the divider to the ground being measured as short as possible will minimize error from this conductor impedance. The simultaneous recording of the voltage and current impulses is normally


Copyright © 2012 IEEE. All rights reserved.

Copyright The Institute of Electrical and Electronics Engineers, Inc.
Provided by IHS under license with IEEE
No reproduction or networking permitted without license from IHS

Order Number: 02120914
Sold to:EGAT [700166108393] - VARRIS.Y@EGAT.CO.TH,
Not for Resale,2016-09-15 03:57:44 UTC

performed with an oscilloscope. The two coaxial cables that connect the divider and the shunt to the oscilloscope should be the same length to avoid time lags between the recorded measurements.

Surge impedance is defined as the ratio of the maximum voltage divided by the maximum current. When a standard lightning waveform is injected into the ground, the maximum voltage and the maximum current may occur at different times.


Copyright © 2012 IEEE. All rights reserved.
Copyright The Institute of Electrical and Electronics Engineers, Inc.
Provided by IHS under license with IEEE
No reproduction or networking permitted without license from IHS
Order Number: 02120914
Sold to:EGAT [700166108393] - VARRIS.Y@EGAT.CO.TH,
Not for Resale,2016-09-15 03:57:44 UTC

# Annex A

(informative)

# Nonuniform soils

## A.1 Two-layer soil apparent resistivity

With this model, the earth is characterized (see Figure A.1) by the following attributes:

- First layer height, $h$
- First layer resistivity, $\rho_1$
- Deep layer resistivity, $\rho_2$
- The reflection coefficient

$$K = \frac{\rho_2 - \rho_1}{\rho_2 + \rho_1} \tag{A.1}$$

A resistivity determination using the Wenner method (see 7.2) results in an apparent resistivity that is a function of the electrode separation $a$. In terms of the parameters in Equation (A.1), the apparent resistivity can be shown (Thug [B60]) to be:

$$\rho(\alpha) = \rho_1 \left[1 + 4\sum_{n=1}^{\infty}\left(\frac{K^n}{\sqrt{1+(2nh/a)^2}} - \frac{K^n}{\sqrt{4+(2nh/a)^2}}\right)\right] \tag{A.2}$$

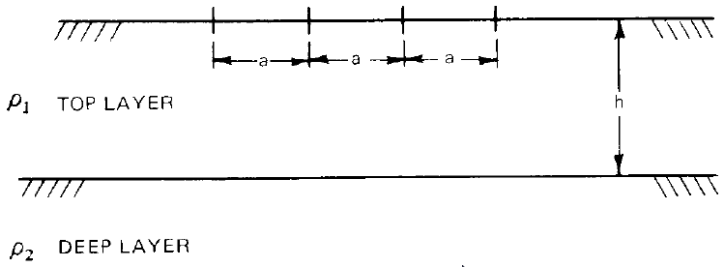


**Figure A.1—Two-layer earth**

## A.2 Ground rod resistance in a two-layer soil

The ground resistance of a rod length $l$ and radius $r$ buried in the first layer of a two-layer soil is given by (Thug [B60]):

$$R = \frac{\rho_1}{2\pi l}\left[\ln\frac{2l}{r} + \sum_{n=1}^{\infty} K^n \ln\frac{2nh + l}{2nh - l}\right] \tag{A.3}$$

where

$K$ is the reflection coefficient defined in Equation (A.3)


Copyright © 2012 IEEE. All rights reserved.
Copyright The Institute of Electrical and Electronics Engineers, Inc.
Provided by IHS under license with IEEE
No reproduction or networking permitted without license from IHS
Order Number: 02120914
Sold to:EGAT [700166108393] - VARRIS.Y@EGAT.CO.TH,
Not for Resale,2016-09-15 03:57:44 UTC

When $K = 0$, the formula corresponds to the uniform soil model with

$$R = \frac{\rho_1}{2\pi l} \ln \frac{2l}{r}$$

If at a given site the ground resistance of a rod is measured for various lengths $l_1$, $l_2$, $l_3$ … $l_n$ (at least three values), the measured values $R_1$, $R_2$, $R_3$, … $R_n$ will provide a set of equations of type [Equation (A.3)] that can be solved to give the unknown values of $\rho_1$, $K$, and $h$.

In some cases, absurd or (when more than three measurements are made) contradictory results are obtained. This indicates either insufficient precision in the measurements or that the assumption of a uniform or two-layer soil was not an adequate approximation. It is preferable, then, to use the four-point or Wenner method with several values of probe separation and to interpret the results by visual inspection of the apparent resistivity curve (see 7.2).


Copyright © 2012 IEEE. All rights reserved.

Copyright The Institute of Electrical and Electronics Engineers, Inc.
Provided by IHS under license with IEEE
No reproduction or networking permitted without license from IHS

Order Number: 02120914
Sold to:EGAT [700166108393] - VARRIS.Y@EGAT.CO.TH,
Not for Resale,2016-09-15 03:57:44 UTC

# Annex B

(informative)

## Determination of an earth model

This annex is intended to assist the user in obtaining, from the measured resistivity data, the earth model that best fits the data. The earth model is limited to a two-layer soil configuration (see Figure A.1).

Let $\rho^o$ be the apparent resistivity value as measured by the four-point or Wenner method and $\rho$ be the calculated resistivity value assuming that earth is a two-layer configuration. Both $\rho^o$ and $\rho$ are functions of the probe spacing. $\rho$ is given by Equation (A.2).

Let $\psi(\rho_1, \rho_2, h)$ be an error function given by:

$$\psi(\rho_1, \rho_2, h) = \sum_{m=1}^{N} \left[\frac{(\rho_m^o - \rho_m)}{\rho_m^o}\right]^2 \quad \text{(B.1)}$$

where

$N$ is the total number of measured resistivity values with probe spacing $a$ as the parameter

To obtain the best fit, $\psi$ should be minimized. To determine the values of $\rho$, $K$, and $h$ that minimize $\psi$, the method of steepest descent (Fadeev and Faddeeva [B28]) is used:

$$\frac{\partial \psi}{\partial \rho_1} = -2 \sum_{i\equiv 1}^{N} \left[\frac{\rho^o(a_i) - \rho(a_i)}{[\rho^o(a_i)]^2}\right] \frac{\partial \rho}{\partial \rho_1}$$

$$\frac{\partial \psi}{\partial \rho_2} = -2 \sum_{i\equiv 1}^{N} \left[\frac{\rho^o(a_i) - \rho(a_i)}{[\rho^o(a_i)]^2}\right] \frac{\partial \rho}{\partial \rho_2}$$

$$\frac{\partial \psi}{\partial h} = -2 \sum_{i\equiv 1}^{N} \left[\frac{\rho^o(a_i) - \rho(a_i)}{[\rho^o(a_i)]^2}\right] \frac{\partial \rho}{\partial h} \quad \text{(B.2)}$$

We have also:

$$\Delta\psi = \frac{\partial \psi}{\partial \rho_1}\Delta\rho_1 + \frac{\partial \psi}{\partial \rho_2}\Delta\rho_2 + \frac{\partial \psi}{\partial h}\Delta h \quad \text{(B.3)}$$

To make sure that the calculations converge to the desired solution, the values of $\Delta\rho_1$, $\Delta\rho_2$, and $\Delta h$ should be such that:

$$\Delta\rho_1 = -\tau \frac{\partial \psi}{\partial \rho_1}$$

$$\Delta\rho_2 = -\sigma \frac{\partial \psi}{\partial \rho_2}$$

$$\Delta h = -\gamma \frac{\partial \psi}{\partial h} \quad \text{(B.4)}$$


Copyright © 2012 IEEE. All rights reserved.

Copyright The Institute of Electrical and Electronics Engineers, Inc.
Provided by IHS under license with IEEE
No reproduction or networking permitted without license from IHS

Order Number: 02120914
Sold to:EGAT [700166108393] - VARRIS.Y@EGAT.CO.TH,
Not for Resale,2016-09-15 03:57:44 UTC

τ, σ, and γ are positive values and small enough to guarantee a solution with the desired accuracy. Normally, values that lead to the following solutions are satisfactory:

$$\Delta\rho_1 = -0.005|\rho_1| \left|\frac{\partial\psi}{\partial\rho_1}\right| / \frac{\partial\psi}{\partial\rho_1}$$

$$\Delta\rho_2 = -0.005|\rho_2| \left|\frac{\partial\psi}{\partial\rho_2}\right| / \frac{\partial\psi}{\partial\rho_2}$$

$$\Delta h = -0.005|h| \left|\frac{\partial\psi}{\partial h}\right| / \frac{\partial\psi}{\partial h} \tag{B.5}$$

Using Equation (B.3) and Equation (B.4), the following equation is obtained:

$$\Delta\psi = -\tau\left(\frac{\partial\psi}{\partial\rho_1}\right)^2 - \sigma\left(\frac{\partial\psi}{\partial\rho_2}\right)^2 - \gamma\left(\frac{\partial\psi}{\partial h}\right)^2 \tag{B.6}$$

where ρ is calculated using Equation (2) and, assuming initial values.

$\rho_1^{(1)}$, $\rho_2^{(1)}$, and $h^{(1)}$, Δψ are calculated using Equation (B.6).

If | Δψ | > ε, the desired accuracy, then the calculation is iterated.

At iteration *k* the new values are given by:

$$\rho_1^{(k)} = \rho_1^{(k-1)} + \Delta\rho_1$$

$$\rho_2^{(k)} = \rho_2^{(k-1)} + \Delta\rho_2$$

$$h^{(k)} = h^{(k-1)} + \Delta h \tag{B.7}$$

The iterative calculations stop when Δψ as given [Equation (B.6)] is such that:

$$| \Delta\psi | < \varepsilon$$

with ε being the accuracy desired.

$\Delta\rho_1$, $\Delta\rho_2$, and $\Delta h$ are calculated using Equation (B.5), which in turn requires the values of $\left(\frac{\partial\psi}{\partial\rho_1}\right)$, $\left(\frac{\partial\psi}{\partial\rho_2}\right)$, and $\left(\frac{\partial\psi}{\partial h}\right)$ given by Equation (B.2).

In Equation (B.2), the values of $\left(\frac{\partial\rho}{\partial\rho_1}\right)$, $\left(\frac{\partial\rho}{\partial\rho_2}\right)$, and $\left(\frac{\partial\rho}{\partial h}\right)$ are obtained from Equation (A.2) as follows:

$$\frac{\partial\rho}{\partial\rho_1} = 1 + 4\sum_{n=1}^{\infty}\left[\left(1 - \frac{n(1-K^2)}{2K}\right)\left(\frac{K^n}{\sqrt{A}} - \frac{K^n}{\sqrt{B}}\right)\right]$$

$$\frac{\partial\rho}{\partial\rho_2} = \sum_{n=1}^{\infty}\left[\frac{2n}{K}(1-K)^2\left(\frac{K^n}{\sqrt{A}} - \frac{K^n}{\sqrt{B}}\right)\right]$$


Copyright © 2012 IEEE. All rights reserved.
Copyright The Institute of Electrical and Electronics Engineers, Inc.
Provided by IHS under license with IEEE
No reproduction or networking permitted without license from IHS
Order Number: 02120914
Sold to:EGAT [700166108393] - VARRIS.Y@EGAT.CO.TH,
Not for Resale,2016-09-15 03:57:44 UTC

$$\frac{\partial \rho}{\partial h} = \frac{16\rho_1 h}{a^2} \sum_{n=1}^{\infty} n^2 \left( \frac{K^n}{\sqrt{B^3}} - \frac{K^n}{\sqrt{A^3}} \right) \quad \text{(B.8)}$$

where

$$A = 1 + (2nh/a)^2$$

$$B = 4 + (2nh/a)^2 \quad \text{(B.9)}$$

and $\rho_1$, $\rho_2$, and $h$ are the calculated values at iteration $K$ [Equation (B.7)].

The method described in this annex is the basis of a computer program designed to determine the two-layer soil configuration that best fits the data obtained in the field. Figure 5 was obtained using this program.


Copyright © 2012 IEEE. All rights reserved.

Copyright The Institute of Electrical and Electronics Engineers, Inc.
Provided by IHS under license with IEEE
No reproduction or networking permitted without license from IHS

Order Number: 02120914
Sold to:EGAT [700166108393] - VARRIS.Y@EGAT.CO.TH,
Not for Resale,2016-09-15 03:57:44 UTC

# Annex C

(informative)

# Theory of the fall-of-potential method

## C.1 Basic definitions and symbols

The basis for the fall-of-potential method with associated definitions and symbols is as follows:

a) When an electrode *E* does not conduct any current into the soil and is located at large distances from any other current carrying electrodes, its self-potential $P_E^E$ (or GPR) is zero (remote earth potential).
b) If current *I* enters the soil through this electrode, then its potential rises to $P_E^E = R_E I$, where $R_\mathrm{E}$ is the electrode impedance. If $I$ = 1A, then $P_E^E = V_E^E = R \times 1 = R_\mathrm{E}$. Therefore, in the following, $V_E^E$ designates the potential rise of electrode *E* when 1 A enters the soil through the electrode. $V_E^E$ is numerically equal to the electrode's impedance in ohms.
c) Assume now that at some finite distance from electrode *E*, an electrode *G* injects a current *I* into soil (*E* does not conduct any current). Because of the local earth potential rise, electrode *E*, initially at zero potential, will be at potential $P_E^G$ (this phenomenon is often called resistive coupling). If $I$ = 1A, then $P_E^G = V_E^G$ (numerically equal to the so-called mutual resistance between *E* and *G*).
d) If electrode *E* carries 1 A while simultaneously electrode *G* conducts also 1A, the potential rise of electrode *E* will be $V_E^E + V_E^G$. The theoretical expressions that permit the calculation of $V_E^E$ or $V_E^G$ are complex and will not be given in this annex except for simple earth and electrode configurations.

## C.2 Derivation of the fundamental equations

The problem is illustrated in Figure C.1.

The current *i* in electrode *P* is assumed negligible to *I.* At a given time *t*, current *I* injected into the ground through *E* is assumed positive and *I*, collected by *G*, is assumed negative.

Based on the definitions and symbols presented previously, the following relations hold:

$$V_P = V_P^E \cdot (I') + V_P^G \cdot (-I') \quad \text{(C.1)}$$

$$V_E = V_E^E \cdot (I') + V_P^G \cdot (-I') \quad \text{(C.2)}$$

where

$I' = I$ A/1 A

$U_P$ and $U_E$ are the potentials or GPR (with respect to remote ground) of electrodes *P* and *E,* respectively.

The voltage *V* measured by the fall of potential method is:

$$V = V_E - V_P$$

$$V = I'(V_E^E - V_E^G - V_P^E + V_P^G) \quad \text{(C.3)}$$


Copyright © 2012 IEEE. All rights reserved.
Copyright The Institute of Electrical and Electronics Engineers, Inc.
Provided by IHS under license with IEEE
No reproduction or networking permitted without license from IHS
Order Number: 02120914
Sold to:EGAT [700166108393] - VARRIS.Y@EGAT.CO.TH,
Not for Resale,2016-09-15 03:57:44 UTC

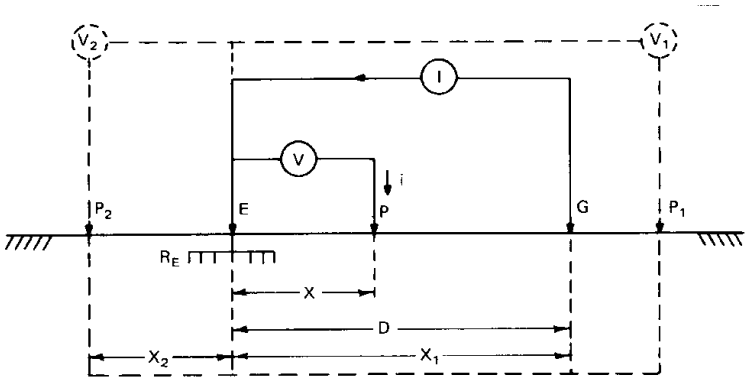


**Figure C.1—Fall-of-potential method**

$V_E^E$ is the potential rise of electrode *E,* resulting from its own current of 1 A. This is, by definition, the impedance $R_E$ of electrode *E*. Therefore, Equation (C.3) can be written as:

$$R = \frac{V}{I} = R_E + (V_P^P - V_E^G - V_P^E)/1\ A \quad \text{(C.4)}$$

$V_P^G V_P^E$ are functions of the spacing between the electrodes (*E*, *G,* and *P*), the electrode configurations, and the soil characteristics.

## C.3 Uniform soil

Let us define the following functions η, Φ, and ψ with respect to the coordinate system shown in Figure C.1. (It is assumed that η, Φ, and ψ are only functions of distances *D* and *x*.)

$$V_E^G = \eta\ (D) \quad \text{(C.5)}$$

$$V_P^G = \Phi(D - x) \quad \text{(C.6)}$$

$$V_P^E = \psi\ (x) \quad \text{(C.7)}$$

According to Equation (C.4), the measured impedance $R = V/I$ will be equal to the true impedance $R_E$ if:

$V_P^G - V_E^E = 0$; that is:

$V_P^G - V_E^G - V_P^E = 0$; that is:

$$D(D - x) - \eta(D) - \psi(x) = 0 \quad \text{(C.8)}$$

## C.4 Identical electrodes and large spacings

If electrodes *E* and *G* are identical **Φ** = ψ and if *D* is large enough such that $V_E^G$ = η*(D)* 0, then condition Equation (C.8) becomes:

$$\Phi(D - x) - \psi\ (x) = 0$$

thus:

$$x_0 = D/2$$

that is, the probe should be located midway between *E* and *G*.


Copyright © 2012 IEEE. All rights reserved.

Copyright The Institute of Electrical and Electronics Engineers, Inc.
Provided by IHS under license with IEEE
No reproduction or networking permitted without license from IHS

Order Number: 02120914
Sold to:EGAT [700166108393] - VARRIS.Y@EGAT.CO.TH,
Not for Resale,2016-09-15 03:57:44 UTC

## C.5 Hemispherical electrodes

If electrodes *E* and *G* are hemispheres that are circulating dc current through uniform soil, then the potential functions Φ, η, and ψ are inversely proportional to the distance relative to the hemisphere center. If the origin of the axes is at the center of hemisphere *E,* then Equation (C.8) becomes:

$$1/(D - x) - 1/D - 1/x = 0 \tag{C.9}$$

The positive root of Equation (C.9) is the exact potential probe location $x_0$:

$$x_0 = 0.618\ D$$

This result is the usual 61.8% rule (Curdts [B18]). If the potential probe *P* is at location $P_2$ (*E* side, see Figure C.1), then $D - x$ should be replaced by $D + x$ in Equation (C.9). In this case, the equation has complex roots only. If *P* is at location $P_1$ (*G* side, see Figure C.1), then $D - x$ should be replaced by $x - D$ in Equation (C.9). The positive root of Equation (C.9) is:

$$x_0 = 1.618\ D$$

## C.6 General case

If the soil is not uniform or electrodes *E* and *G* have complex configurations, or both, then the functions Φ, η, and ψ are not easy to calculate. In such cases, computer solutions are generally required (Dawalibi and Mukhedkar [B22]).


Copyright © 2012 IEEE. All rights reserved.

Copyright The Institute of Electrical and Electronics Engineers, Inc.
Provided by IHS under license with IEEE
No reproduction or networking permitted without license from IHS

Order Number: 02120914
Sold to:EGAT [700166108393] - VARRIS.Y@EGAT.CO.TH,
Not for Resale,2016-09-15 03:57:44 UTC

# Annex D

(informative)

# Surface material resistivity

## D.1 Introduction

IEEE Std 80 noted that a material that is used to cover the substation soil layer will have a large effect on body current resulting from step and touch voltages. In most cases, the values of safe touch and step voltages are based on the wet resistivity of the surface material, as the dry resistivity of most surface materials is very high and does not represent the worst design value.

Local conditions, moisture, size, type of stone, and so on can affect the resistivity value of surface material, and measuring the resistivity of wet rock samples typical of the type being used in a given area is important. Table D.1 is reproduced from IEEE Std 80-2000 and gives typical resistivity values for different types of surface material measured in different regions of the United States. These values are not valid for all types and sizes of stone in any given region. IEEE Std 80 suggests that tests be performed to determine the resistivity of the stone typically purchased by the utility.

Unfortunately, there is no industry standard on how to measure the wet resistivity of surface materials or how wet the sample should be prepared. In general, the methods described in this annex can be used to measure the wet or dry resistivity of the surface material. When measuring the wet resistivity, a method is devised to wet the sample thoroughly, and then the water should be drained off until some arbitrary moisture content is reached. Currently, it is left to the tester to determine the method and value of this moisture content.

The electrical resistivity of a material might be measured after placement using the methods for soil resistivity. However, the resistivity methods described in Clause 7 are not applicable to surface material depths of 100 mm to 400 mm that are typically used in substation applications.

**Table D.1—Typical surface material resistivities**

| Number | Description of surface material (U.S. state where found) | Resistivity of sample ohm-meter | |
|---|---|---|---|
| | | Dry | Wet |
| 1 | Crusher run granite with fines (NC) | $140 \times 10^6$ | 1300 (ground water, 45 ohm-meters) |
| 2 | 1.5 in (0.04 m) crusher run granite (GA) with fines | 4000 | 1200 (rain water, 100 ohm-meters) |
| 3 | 0.75 in to 1 in (0.02 m to 0.025 m) granite (CA) with fines | — | 6513 (10 min after 45 ohm-meters water drained) |
| 4 | #4 (1 in to 2 in) (0.025 m to 0.05 m) washed granite (GA) | $1.5 \times 10^6$ to $4.5 \times 10^6$ | 5000 (rain water, 100 ohm-meters) |
| 5 | #3 (2 in to 4 in) (0.05 m to 0.1 m) washed granite (GA) | $2.6 \times 10^6$ to $3 \times 10^6$ | 10 000 (rain water, 100 ohm-meters) |
| 6 | Size unknown, washed limestone (MI) | $7 \times 10^6$ | 2000 to 3000 (ground water, ohm-meter) |
| 7 | Washed granite, similar to 0.75 in (0.02 m) gravel | $2 \times 10^6$ | 10 000 |
| 8 | Washed granite, similar to pea gravel | $40 \times 10^6$ | 5000 |
| 9 | #57 (0.75 in) (0.02 m) washed granite (NC) | $190 \times 10^6$ | 8000 (ground water, 45 ohm-meters) |
| 10 | Asphalt | $2 \times 10^6$ to $30 \times 10^6$ | 10 000 to $6 \times 10^6$ |
| 11 | Concrete | $1 \times 10^6$ to $1 \times 10^{9}$[a] | 21 to 100 |

[a] Oven-dried concrete (Hammond and Robson [B33]). Values for air-cured concrete can be much lower due to moisture content.


Copyright © 2012 IEEE. All rights reserved.

Copyright The Institute of Electrical and Electronics Engineers, Inc.
Provided by IHS under license with IEEE
No reproduction or networking permitted without license from IHS

Order Number: 02120914
Sold to:EGAT [700166108393] - VARRIS.Y@EGAT.CO.TH,
Not for Resale,2016-09-15 03:57:44 UTC

Measurement after placement under one set of atmospheric and soil conditions might not allow determination of resistivity under all operating conditions. Also, measurements made after placement might make it impractical to adjust the design of the grid and surface material.

Resistivity measurement of surface material, under controlled conditions, before placement, allows a broader range of practical modifications of the ground grid design. There are seven published methods for measurement of the resistivity of soil or a surface material (also known as "rock"). Three methods are appropriate for resistivity measurement of soil and are included in this guide. These three soil measurements methods might be applied to the resistivity measurement of "rock" (substation surface material).

A fourth method for resistivity measurement of soil is given in ASTM G57-2012 [B10], and this method might also be used to measure the resistivity of rock.

The published literature includes three methods for resistivity measurement that are specifically applied to the measurement of "rock" rather than "soil."

## D.2 Soil methods applied to the measurement of rock resistivity

The three resistivity soil measurements in this guide are the two-point method, the variation of depth (three-point) method, and the four-point method.

Substation surface material (e.g., rock) is typically applied in a relatively thin layer of 150 mm or less. The thin layer of material leads to significant problems in the application of any of the three methods of this guide for in situ or sample resistivity measurement of the rock.

### D.2.1 Two-point method

The two-point method is intended for in situ soil measurement. This method could be used for in situ measurement of rock, but the thin rock layer would further compromise the quality of the data. The two-point method could be applied for sample measurement, but this method would also require attention to the interfacial resistance between the test probes and the rock.

### D.2.2 Three-point method

The three-point method requires increasing rod depth for successive measurements. The method is not a practical alternative for in situ measurement of the thin layer of installed surface rock. A sample measurement might be made with this method, but the depth required for the sample is fairly deep (e.g., 2 m to 3 m) for the sample. In addition, this method would require attention to the interfacial resistance between the test probes and the rock.

### D.2.3 Four-point method

The four-point method measures the average resistivity to a depth that approximates the distance between electrodes. To make the in situ measurement of a thin layer (e.g., 200 mm) of rock, the electrodes are separated by no more than 200 mm, but the electrode depth will need to be 150 mm to 200 mm to make sufficient contact with the rock. However, the four-point method is based on the assumption that the length of test probes is small compared to the spacing between the probes. As a result, the theoretical basis for the four-point method is not valid for this arrangement.

Measuring the resistivity of rock is possible using the four-point method. However, the assumption for radius requires that the probe spacing be large with respect to the length of the probe. Larger probe spacing requires larger sample dimensions for the measurement of the resistivity of a homogenous, single-layer (no reflection) material.


Copyright © 2012 IEEE. All rights reserved.

Copyright The Institute of Electrical and Electronics Engineers, Inc.
Provided by IHS under license with IEEE
No reproduction or networking permitted without license from IHS

Order Number: 02120914
Sold to:EGAT [700166108393] - VARRIS.Y@EGAT.CO.TH,
Not for Resale,2016-09-15 03:57:44 UTC

For valid measurements and for a probe length of 150 mm to 200 mm, the electrode spacings need to be of the order of 1500 mm to 2000 mm. The dimensions of the sample need to be more than three times the equal spacing between the four probes (i.e., approximately 4.5 $m^2$). To measure the sample and not the sample vessel, the depth of the sample needs to be greater than the probe spacing (e.g., 1500 mm). For a four-point measurement, the sample needs to be approximately 4.5 $m^2$ and 1.5 m deep. For more information on this method, see D.3.

## D.3 ASTM method applied to the measurement of rock resistivity

ASTM G57-2012 [B10] presents a method of in situ and sample measurement of soil resistivity. The ASTM equations are identical to Equation (3) and Equation (4) in 7.2. As noted, Equation (3) and Equation (4) assume that the probe spacing is very much greater (e.g., by a factor of 10) than the length of the probes.

As with the four-point method of this guide, the dimensions of the sample need to be approximately 4.5 $m^2$. The depth needs to be 1.5 m, as shown in Figure A.1 of ASTM G57-2012 [B10].

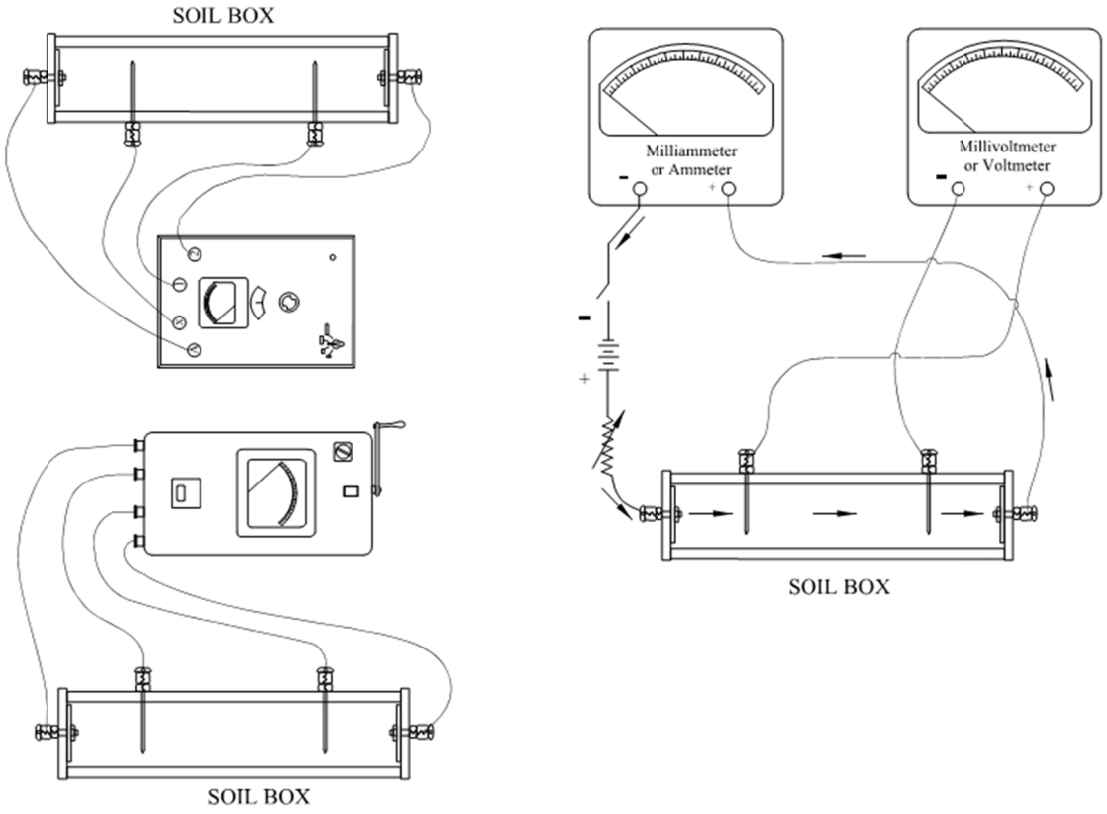


**Figure D.1—ASTM G57-2012 [B10] test configuration**

## D.4 Rock resistivity measurement published literature

Three methods for measurement of the resistivity of the surface material are given in published literature. A method was presented by Carmen and Woodhouse [B16] published for the IEEE International Powercon Conference in 2000.

Abledu and Laird [B2] published another method in the *Transactions on Power Delivery* in 1993. A third method is described in a project sponsored by the Electric Power Research Institute (Patel [B53]).


Copyright © 2012 IEEE. All rights reserved.
--`,,,,,,`,```,,`,`,,`,-`-`,,`,,,`---
Copyright The Institute of Electrical and Electronics Engineers, Inc.
Provided by IHS under license with IEEE
No reproduction or networking permitted without license from IHS
Order Number: 02120914
Sold to:EGAT [700166108393] - VARRIS.Y@EGAT.CO.TH,
Not for Resale,2016-09-15 03:57:44 UTC

### D.4.1 Carmen and Woodhouse method

The Carmen and Woodhouse method of sample resistivity measurement was developed primarily to assess the effect of water in rock surface material. However, resistivity measurements were made for several different types and sizes of dry rock.

#### D.4.1.1 Sample selection and dimensions

The dry rock resistivity measurements were made on material described as "large blue metal, crushed granite and river gravel." The paper by Carmen and Woodhouse [B16] does not contain information that describes the material properties, other than rock gradation (i.e., dimensions).

The rock sizes in the measurement are 30 mm to 40 mm (approximately 1 1/4 in to 1 1/2 in). Measurements of other sizes of rock were made, and the sizes are described as "smaller particles" and "large particles."

#### D.4.1.2 Measurement configuration

The measurement setup was similar to the configuration used in the Laird method. A 150 mm (approximately 6 in) PVC cylinder was used. Copper mesh described as a "scouring pad" was used for the top and bottom electrodes. An attempt was made to use aluminum foil for electrodes, but the foil was not robust enough to withstand multiple tests.

No description is given for the attachment of measuring equipment to the copper mesh electrodes. An assessment of the validity of the measurement configuration was made. A cell made of a 300 mm (approximately 12 in) diameter cylinder was used to make measurements. Measurements with the 150 mm cylinder were found to be within 2% of the measurements made with the 300 mm cylinder.

#### D.4.1.3 Measurement instrumentation and calculation of resistivity

The first attempt at resistivity measurements was made with a digital insulation tester. During the test, the measured resistance value continued to increase, exhibiting a capacitive charge effect between the two electrode plates.

The charging curve was slow (in the order of hours) due to the massive resistance involved (>10 k ohms). This tends to be a problem whenever testing high-resistance dry samples.

Ultimately, the instrument used for wet resistivity tests was also used in the measurement of the resistance of dry rock. An accurate digital resistance meter (which requires reasonable current output) provides a quick, accurate reading for values up to 20 k ohms. For values above this, a 10 k ohm precision parallel resistor was used.

Initially, this instrument was used for *dry* tests. However, the values obtained were so much higher than the l0 k ohm resistor that an acceptable level of accuracy could not be achieved, requiring the use of a digital insulation tester.

The resistivity was calculated with the following equation:

$$r = R \times A/L \tag{D.1}$$

where

$r$ is the resistivity (ohm-m)
$R$ is the measured resistance (ohms)
$A$ is the area ($m^2$)
$L$ is the depth of sample (m)


Copyright © 2012 IEEE. All rights reserved.

Copyright The Institute of Electrical and Electronics Engineers, Inc.
Provided by IHS under license with IEEE
No reproduction or networking permitted without license from IHS

Order Number: 02120914
Sold to:EGAT [700166108393] - VARRIS.Y@EGAT.CO.TH,
Not for Resale,2016-09-15 03:57:44 UTC

Higher current and higher voltage testing was carried out using a 100 kV test set to make breakdown tests. No description of the test set is provided in the Carmen and Woodhouse paper [B16]. In addition, there is no method given for calculation of resistivity of the sample based on the voltage breakdown values.

#### D.4.1.4 Measurement procedure

Before the test vessel was filled with the rock, it was wiped around the sides with a silicon-treated cloth to minimize the formation of carbon tracks along the vessel wall. After filling the cylinder, the rock was put under pressure with a 25 kg weight, which was used to maintain appropriate pressure during testing.

#### D.4.1.5 Experimental results

The objective was to determine the resistivity of wet rock. However, the resistivity of dry rock was measured.

For “clean dry (smaller particles),” a “typical” resistivity of the rock was 14 000 ohm-meters. For “clean dry (large particles),” a “typical” resistivity of the rock was 1 000 000 ohm-meters.

The paper by Carmen and Woodhouse [B16] does not present a definition for the categories of rock, the number of measurements made, or the method used to calculate a typical value.

### D.4.2 Laird method

The Laird method of sample resistivity measurement was also developed to measure the effect of water (e.g., tap water) on the resistivity of substation surface rock.

#### D.4.2.1 Sample selection and dimensions

A single material and gradation was selected for the measurement. The sample was a “washed, 3/4-inch to 1 in, course aggregate. The rock used was granite” (Abledu and Laird [B2]). The 3/4 in (19.1 mm) to 1 in (25.4 mm) aggregate corresponds to the ASTM D448-03a-2008 [B9] No. 5 aggregate. As noted, an ASTM definition of “granite” is given in ASTM C615-2003 [B8]. However, reference to ASTM standards is not presented in the paper by Abledu and Laird [B2], nor is the weight of the field sample required by ASTM C136-2006 [B7] (approximately 40 kg).

#### D.4.2.2 Measurement configuration

In the Laird method, the measurement setup consists of a 154 mm (6 in) plastic cylinder that is 298 mm (11.75 in) in diameter. The cylinder is open at both ends and is placed on a flat aluminum base plate. The cylinder is filled with the sample to be tested, and the top of the sample is made level with the top of the cylinder. The sample is completely covered with layers of aluminum foil. A soft padding and weight of 10 kg is used to press the foil against the rock.

#### D.4.2.3 Measurement instrumentation and calculation of resistivity

A resistance meter, 0.01 ohm to 9990 ohm range, with a parallel 10 k ohm precision resistor, was used to measure the resistance of the sample.

The resistance of the rock sample was calculated from the parallel arrangement of the precision resistor and the sample. The equation is as follows:

$$R_s = \left(R_m \times 10\ 000\right) / \left(10\ 000 - R_m\right) \quad \text{(D.2)}$$


Copyright © 2012 IEEE. All rights reserved.

Copyright The Institute of Electrical and Electronics Engineers, Inc.
Provided by IHS under license with IEEE
No reproduction or networking permitted without license from IHS

Order Number: 02120914
Sold to:EGAT [700166108393] - VARRIS.Y@EGAT.CO.TH,
Not for Resale,2016-09-15 03:57:44 UTC

where

$R_s$ is the resistance of the rock sample
$R_m$ is the measured resistance

The resistivity of the sample was calculated with Equation (D.3):

$$\rho = (V/h)/(I/A) = (R_s \times A)/h = R_s \times \left((\pi \times d^2)/(4 \times h)\right) \quad \text{(D.3)}$$

where

$R_s$ is the resistance of the rock sample
$d$ is the diameter of the test apparatus in meters (i.e., 0.298 m)
$h$ is the height of the test apparatus in meters (i.e., 0.154 m)

$$\rho = 0.46 \times R_s \quad \text{(D.4)}$$

#### D.4.2.4 Measurement procedure

The cylinder was filled with the sample to be tested, and the top of the sample was made level with the top of the cylinder.

The precision resistor leads were connected directly to the terminals of the resistance meter, and the resistance meter terminals were connected to the aluminum base and top foil with bare copper wire and mechanical connectors (alligator clips).

The primary purpose of the experiment was to measure the effect of water resistivity on the wet resistivity of the rock. The rock sample was thoroughly saturated by wetting the rock with water of a known resistivity and recirculating the drainage 20 times. The sample was then allowed to drain for 10 min before the first resistance measurement was taken.

#### D.4.2.5 Experimental results

The wet resistivity of the same rock sample varied over a wide range depending on the initial resistivity of the water and the drainage time. When tested with water of 500 Ω-m resistivity, the rock had a 10 410 Ω-m resistivity after 10 min of drainage and 16 562 Ω-m after 130 min of drainage. When tested with water of 5.7 Ω-m resistivity, the same rock had a 2180 Ω-m resistivity at 10 min of drainage and increased to 4136 Ω-m after 130 min of drainage.

Due to the wide range of values, the paper by Abledu and Laird [B2] recommends testing be done with water of 100 Ω-m and measurements be made after 10 min of drainage time. Water of other resistivity can be used, and the paper provides a chart and equation for correction to 100 ohm-meters.

### D.4.3 Rectangular volume method

The rectangular volume method of sample resistivity measurement was also developed to make field measurements to determine the effect of seasonal variations in weather conditions. The measurements were made with the surface material exposed to the weather, and it is unlikely that the resistivity reflects the resistivity of dry material. However, the methods might be applied to dry material.


Copyright © 2012 IEEE. All rights reserved.

Copyright The Institute of Electrical and Electronics Engineers, Inc.
Provided by IHS under license with IEEE
No reproduction or networking permitted without license from IHS

Order Number: 02120914
Sold to:EGAT [700166108393] - VARRIS.Y@EGAT.CO.TH,
Not for Resale,2016-09-15 03:57:44 UTC

### D.4.3.1 Sample selection and dimensions

The sample material is described as "1 1/2 in crusher run," "#3 washed gravel," and "#4 washed gravel" (Patel [B53]).

It is likely that the 1 1/2 in had a gradation in accordance with ASTM D 448-03a-2008 [B9] (i.e., size number 4, 1 1/2 in to 3/4 in). There is no engineering standard that defines "crusher run," and no further description is given in the published paper (Patel [B53]).

It is also probable that the #3 and #4 are references to ASTM D448-03a-2008 [B9] (i.e., size number 3, 2 in to 1 in and size number 4, 1 1/2 in to 3/4 in). The inclusion of "washed" is most likely alluding to ASTM C117-04-2004 [B5] and probably defines the material as devoid of particles that will pass a 70 μm sieve. Although there is no standard definition of "crusher run," it is likely that the sample included material that would pass a 70 μm sieve.

No information about the sample weight is provided. It is likely that the sample filled the fixture described below and had a volume of 0.081 $m^3$.

### D.4.3.2 Measurement configuration

Fiberglass boxes were placed on 2 in by 4 in (trade size) beams. No information about the properties of the fiberglass boxes (e.g., material resistivity) is provided in the published paper (Patel [B53]).

The fiberglass boxes were approximately 900 mm long, 600 mm wide, and 150 mm deep. Several holes were drilled in the floors of these boxes to facilitate draining of the rain water from the box. No further description of the box bottom material (e.g., type of material, thickness, method of attachment to the side rails, and material resistivity) is provided.

The material in the fiberglass boxes was exposed to outdoor elements.

The electrical configuration of the measurement is shown in Figure D.2 and is reproduced with EPRI permission from the report by Patel [B53].

Copper electrodes covered two faces of the fiberglass box. The faces were selected to give a large cross-sectional area of the material for the measurement. Aluminum balls were inserted between the measured material and each of the two copper electrode faces of the test box to reduce the contact resistance between the gravel and the metal electrode surface. Subsequent tests demonstrated the effect of contact resistance between the electrodes and the sample. Without the aluminum balls, the resistance across the sample was as much as 600% of the resistance measured with the enhancement of the aluminum balls.


Copyright © 2012 IEEE. All rights reserved.

Copyright The Institute of Electrical and Electronics Engineers, Inc.
Provided by IHS under license with IEEE
No reproduction or networking permitted without license from IHS

Order Number: 02120914
Sold to:EGAT [700166108393] - VARRIS.Y@EGAT.CO.TH,
Not for Resale,2016-09-15 03:57:44 UTC

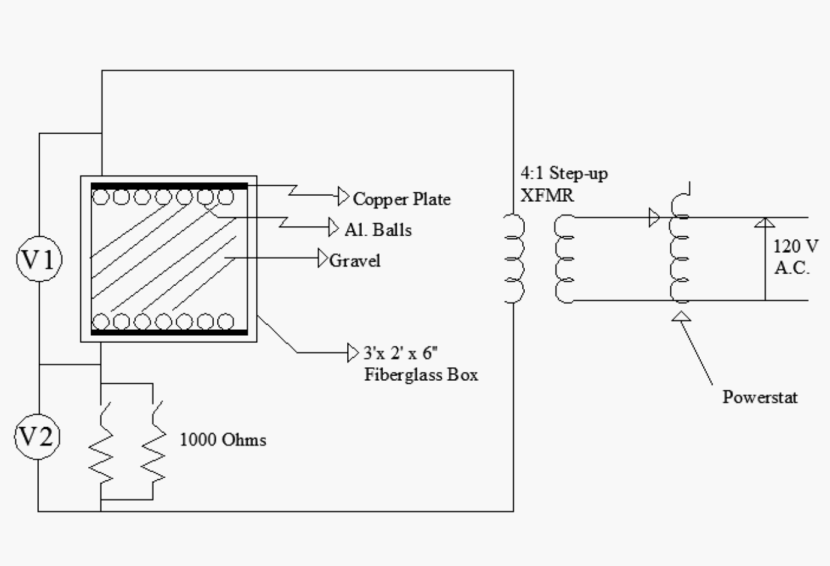


**Figure D.2—Gravel resistivity test**

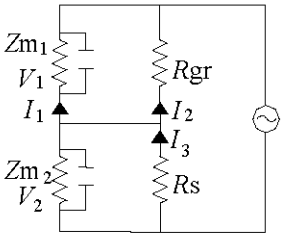


Requirements:

Ⓐ $Zm_2 >> Rs$

Ⓑ Measure $V_1$ and $V_2$ simultaneously

$$I_3 = I_1 + I_2$$

$$I_1 = \frac{V_1}{Zm_1} \qquad I_3 = \frac{V_2}{Rs}$$

$$Rgr = \frac{V_1}{I_2} = \frac{V_1}{\left(\frac{V_2}{Rs} - \frac{V}{Zm1}\right)}$$

**Figure D.3—Circuit to eliminate error caused by voltmeter**

### D.4.3.3 Measurement instrumentation and calculation of resistivity

A power source was used to provide a high current supply to the material. Although the input impedance voltmeters were relatively low, the error caused by the voltage measuring device was compensated by calculations that are described in D.4.3.4.

Two separate voltmeters are used to measure the resistor voltage and the voltage between the sample fixture electrodes.

The published paper by Patel [B53] does not include information about the method used to calculate resistivity. However, calculations were probably made with the classic equation, for example:

$$\rho = R \times A / L \tag{D.5}$$

where

ρ is the resistivity (ohm-m)


Copyright © 2012 IEEE. All rights reserved.

Copyright The Institute of Electrical and Electronics Engineers, Inc.
Provided by IHS under license with IEEE
No reproduction or networking permitted without license from IHS

Order Number: 02120914
Sold to:EGAT [700166108393] - VARRIS.Y@EGAT.CO.TH,
Not for Resale,2016-09-15 03:57:44 UTC

$R$ is the measured resistance (ohms)
$A$ is the area ($m^2$)
$L$ is the depth of sample (m)

### D.4.3.4 Measurement procedure

The output of the Powerstat was adjusted to cause a 500 V drop across the sample.

The Fluke multimeters were simultaneously inserted in the test circuit across the test specimen. One Fluke multimeter measured the voltage across the test specimen, and the other measured the sum of the current flowing through the test specimen and the first meter. The error caused by the voltage measuring meter across the test specimen was then eliminated by correcting the voltage readings as illustrated in Figure D.3.

### D.4.3.5 Experimental results

The published results in Patel [B53] do not indicate that measurements were made for dry rock.

The measurements that were made do indicate that there were significant differences in the resistivity of "washed gravel" and "crusher run" rock. This would indicate that selection of the sample material is an important consideration in making dry rock measurements.


Copyright © 2012 IEEE. All rights reserved.

Copyright The Institute of Electrical and Electronics Engineers, Inc.
Provided by IHS under license with IEEE
No reproduction or networking permitted without license from IHS

Order Number: 02120914
Sold to:EGAT [700166108393] - VARRIS.Y@EGAT.CO.TH,
Not for Resale,2016-09-15 03:57:44 UTC

# Annex E

(informative)

# Instrumentation

## E.1 Earth test meter

A specialized tester is used to test the unique nature of ground resistance. A dedicated ground resistance tester can avoid the problems that can arise from the use of a dc ohmmeter or two-terminal multimeter. The tester establishes a current through the soil from the test ground to a test probe at a distance representing "remote earth." An ac or white noise signal is used to minimize interference from soil transients and inductive noise, by providing a distinct frequency against which to make the measurement. A second remote probe senses voltage drop by soil resistance to the point of placement, and the two measured parameters of current and voltage drop are used to calculate the resistance of the test ground. The ability to move the potential probe independently of the current probe enables the graphing of resistance changes in the vicinity of the test ground to avoid misinterpretations caused by localized anomalies or coupling with the current probe.

Early models operated by balancing the unknown resistance of the test ground against a series of decade resistors of precise values. Power was supplied by an on-board, hand-cranked generator. The hand-cranked earth tester is an instrument with an alternating current generator with a mechanical rectifier, a gear train and crank for operating the generator, and a resistance network. The indicator is a taut-band microammeter. When current is applied to the indicator, the pointer deflects either positive (right), negative (left), or remains at zero (center). The direction and amount of deflection is determined by the relationship of the resistance dialed into the earth tester and the resistance under test. If the resistance under test is greater than the resistance dialed into the earth tester, then the indicator will read positive. If the resistance under test is less than the resistance dialed into the earth tester, then the indicator will read negative. If the resistances are equal, then the indicator will read zero. By this process, a series of decade dials balances each known resistor in the instrument against the load being tested until the final reading is obtained.

The alternating current generator consists of a single stator coil and a bipole permanent magnet rotor. A mechanical rectifier positioned on the end of the shaft converts the returning unbalanced current to dc for the meter.

Later models employed direct-reading analog meters. When the test switch is closed, the current passing through the electrode under test from the tester's generator and the voltage drop between the electrode under test and the potential spike are used as inputs to a log ratio computer. The output of the log ratio computer is the logarithm of the unknown resistance. This signal drives the ohmmeter whose scale is calibrated directly in ohms. A secondary function could be performed to test the resistance of the probes so that they could be determined to be within the required measurement parameters. A second switch position enables the tester to measure the resistance between the electrode under test and the current spike. In this mode, a separate range network enables the meter to indicate resistance much higher than the main scale by using a separate current-resistance subscale. The same function can be used to check potential resistance by momentarily switching leads. The two detection circuits operate synchronously with the frequency of the test current. This enables them to reject signals of other frequencies.

Digital models were later developed with appropriate modifications while adhering to the fundamental schematic of a dedicated ground tester. The potential drop across the earth resistance under test is fed to the measuring circuit via the potential terminals. An input buffer and voltage limiter prevent the measuring circuit from loading the earth resistance under test. The test signal is supplied by a reversing dc or constant-current ac source powered from a floating supply that can be switched to provide appropriate ranges. Later models auto-range by the control logic monitoring the output of the over-range detector and switching the


Copyright © 2012 IEEE. All rights reserved.

Copyright The Institute of Electrical and Electronics Engineers, Inc.
Provided by IHS under license with IEEE
No reproduction or networking permitted without license from IHS

Order Number: 02120914
Sold to:EGAT [700166108393] - VARRIS.Y@EGAT.CO.TH,
Not for Resale,2016-09-15 03:57:44 UTC

current source to a lower current output. These instruments also auto-range if the high current loop resistance detector senses too much current loop resistance for the preset range. An internal relay could short one current and one potential terminal together to provide a three-pole test for speed and convenience if desired. The test current is passed via the current terminals through the earth under test. A crystal-controlled oscillator is at the core of the waveform generator circuit. The fundamental frequency so derived is subdivided to provide an appropriate test signal. Waveforms are also generated to operate the phase-sensitive filter and detector circuits. The phase-sensitive filter removes noise imposed on the test signal as it passes through the earth under test. The microprocessor calculates the resistance being measured from these two parameters, and the measurement signal is shown directly on the display in units of ohms.

## E.2 Clamp-on ground tester

The fall-of-potential method is reliable and accurate, and it can be used to test any size ground system. Additionally, the operator has complete control of the test setup and can check or proof the results by testing at different probe spacings. Unfortunately, the fall-of-potential method also comes with several significant disadvantages, as follows:

a) It is extremely time consuming and labor intensive.
b) External or peripheral ground electrodes connected to the system to be measured will affect the resistance measurement.

The clamp-on ground testing method provides the operator with the ability to make effective measurements under the right conditions. The clamp-on methodology is based on Ohm's law ($R = V / I$). A known voltage is applied to a complete circuit, and the resulting current flow is measured. The resistance of the circuit can then be calculated. The clamp-on ground tester applies the signal and measures the current without a direct electrical connection. The clamp includes a transmit coil that applies the voltage and a receive coil that measures the current.

For the clamp-on method to work properly, there should be a complete circuit already in place, as the operator has no probes and, therefore, cannot set up the desired test circuit. The operator should be certain that earth is included in the return loop. The tester measures the complete resistance of the path (loop) the signal is taking. All elements of the loop are measured in series. The method assumes that only the resistance of the test ground contributes significantly.

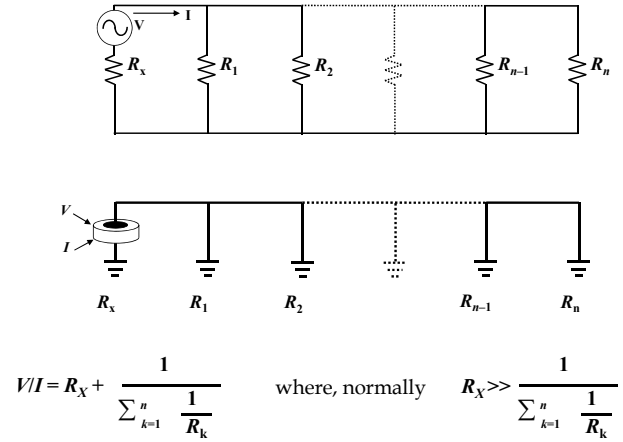


**Figure E.1—Basic clamp-on ground testing methodology**

Figure E.1 shows the basic methodology. The tester is clamped over $R_X$. All test current travels through $R_X$ but divides between the remaining resistances to return. Note that $R_X$ is assumed to be much, much greater than the combined resistance of all other ground electrodes. In a multiple ground system, the circuit can be considered a loop consisting of the individual ground electrode, a return path via all other electrodes, and


Copyright © 2012 IEEE. All rights reserved.
Copyright The Institute of Electrical and Electronics Engineers, Inc.
Provided by IHS under license with IEEE
No reproduction or networking permitted without license from IHS
Order Number: 02120914
Sold to:EGAT [700166108393] - VARRIS.Y@EGAT.CO.TH,
Not for Resale,2016-09-15 03:57:44 UTC

the mass of earth. The single electrode will have a higher resistance than the remainder of grounds connected in parallel.

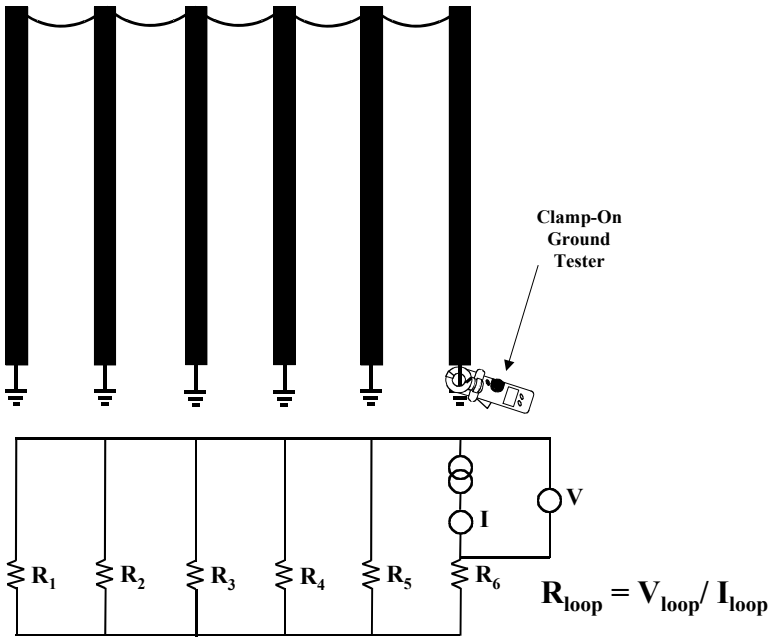


**Figure E.2—Pole ground application**

Figure E.2 shows a practical example of where the clamp-on method is highly effective, provided $R_X$ is much larger than the return path of the parallel ground paths. The application is an interconnected parallel ground, like a distribution or transmission line. The system neutral completes the return. The more returns, the smaller the contribution of extraneous elements to the reading and, therefore, the greater the accuracy. Even a "bad" (high-resistance) element among many low-resistance returns is not enough to defeat the measurement. But, if the returns are few, or all the elements are "high," then the error can be large.

The primary advantage of the clamp-on method is that it is quick and easy, as no probes have to be driven and the ground rod does not have to be disconnected from the system. The clamp-on method also includes the bonding and overall connection resistance of the system and can measure the leakage current flowing through the system; this information is not available from a fall-of-potential test. Fall of potential measures only the ground electrode, not the bonding of the system. With the clamp-on method, an "open" or high-resistance bond will show up in the reading because the clamp-on tester uses the grounding conductor as part of the return.

There are several major advantages to the clamp-on method but also many disadvantages. It is important for the operator to understand the limitations of the test method so that the operator does not misuse the instrument and get erroneous or misleading readings. A clamp-on tester is an important tool in the bag of a test technician but cannot be the only instrument used.

The clamp-on method is only effective in situations with multiple grounds in parallel, or with the tested ground electrode connected to a very low resistance second electrode (e.g., a very large grounding system). This method cannot be used on isolated grounds, as there is no return path, making it not applicable for installation checks or commissioning new sites. In addition, the clamp-on method cannot be used if an alternative lower resistance return involving the soil exists, such as with cellular towers or substations.


Copyright © 2012 IEEE. All rights reserved.
Copyright The Institute of Electrical and Electronics Engineers, Inc.
Provided by IHS under license with IEEE
No reproduction or networking permitted without license from IHS
Order Number: 02120914
Sold to:EGAT [700166108393] - VARRIS.Y@EGAT.CO.TH,
Not for Resale,2016-09-15 03:57:44 UTC

The operator should also be aware of the subtleties of the test method to ensure accurate results and analysis. If another part of the ground system is in the "resistance area" of the electrode under test, then the result will be lower than the true resistance of the electrode, which could lead to a false sense of security. Also, the test is performed at a high frequency to enable the transformers to be as small as possible from a practical viewpoint. The downside is that this approach might be less representative of a fault at power frequency than results from the traditional ground testing frequency of 128 Hz.

To consider the effect of higher frequencies on the accuracy of the reading, let us use the system shown in Figure E.2 and make the following assumptions:

- Overhead conductor = No. 2 awg ACSR
- Length of each overhead line span = 61 m (200 ft)
- Number of spans = 5

$G = R_{\#}$ = Resistance of each ground rod in ohms
= 1 ohm for case 1
= 10 ohms for case 2
= 100 ohms for case 3

$L_{60}$ = Impedance of each overhead line span at 60 Hz
$= (200 \div 5280)[(R_{\text{LINE}} + 0.00159 \times 60) + (X_{\text{LINE}} \times 60 \div 60 + 0.004657 \times 60 \times \text{Log}\,(2162\ \sqrt{60 \div 100}\,)) \times i]$
$= 0.057 + 0.57i$

$L_{2403}$ = Impedance of each overhead line span at 2403 Hz
$= (200 \div 5280)[(R_{\text{LINE}} + 0.00159 \times 2403) + (X_{\text{LINE}} \times 2403 \div 60 + 0.004657 \times 2403 \times \text{Log}\,(2162\ \sqrt{2403 \div 100}\,)) \times i]$
$= 0.198 + 2.604i$

$L_{3333}$ = Impedance of each overhead line span at 3333 Hz
$= (200 \div 5280)[(R_{\text{LINE}} + 0.00159 \times 3333) + (X_{\text{LINE}} \times 3333 \div 60 + 0.004657 \times 2403 \times \text{Log}\,(2162\ \sqrt{3333 \div 100}\,)) \times i]$
$= 0.254 + 3.654i$

Using the parameters and computations listed, the impedance of the overall loop resistance being measured by the clamp-on meter and the percent error can be computed using simple circuit analysis.

The measured loop resistance with a 60 Hz test signal would be as follows:
$Z(1, L_{60}) = 1.32 + 0.108i = 1.3244$ ohms, 32.44% higher than the actual 1 ohm ground rod
$Z(10, L_{60}) = 10.317 + 0.211i = 10.319$ ohms, 3.19% higher than the actual 10 ohm ground rod
$Z(100, L_{60}) = 100.238 + 0.225i = 100.238$ ohms, 0.24% higher than the actual 100 ohm ground rod

The measured loop resistance with a 2403 Hz test signal would be as follows:
$Z(1, L_{2403}) = 2.031 + 2.837i = 3.489$ ohms, 248% higher than the actual 1 ohm ground rod
$Z(10, L_{2403}) = 13.723 + 5.656i = 14.842$ ohms, 48% higher than the actual 10 ohm ground rod
$Z(100, L_{2403}) = 101.703 + 10.155i = 102.209$ ohms, 2.2% higher than the actual 100 ohm ground rod

The measured loop resistance with a 3333 Hz test signal would be as follows:
$Z(1, L_{3333}) = 2.144 + 3.852i = 4.408$ ohms, 341% higher than the actual 1 ohm ground rod
$Z(10, L_{3333}) = 14.61 + 6.667i = 16.059$ ohms, 61% higher than the actual 10 ohm ground rod
$Z(100, L_{3333}) = 102.759 + 14.043i = 103.714$ ohms, 3.7% higher than the actual 100 ohm ground rod

As indicated, significant error can occur in clamp-on meters if the reactance of the loop is significant in comparison to the resistance being measured. Filtering might be present on some clamp-on meters to reduce the error. but the user will need to be aware of equipment limitations and the overall test circuit.


Copyright © 2012 IEEE. All rights reserved.

Copyright The Institute of Electrical and Electronics Engineers, Inc.
Provided by IHS under license with IEEE
No reproduction or networking permitted without license from IHS

Order Number: 02120914
Sold to:EGAT [700166108393] - VARRIS.Y@EGAT.CO.TH,
Not for Resale,2016-09-15 03:57:44 UTC

It is also important to be sure that a good return path is present to obtain accurate readings. A poor return path can give high readings. The connection should be on the correct part of the loop for the electrode under test, as a wrong connection can give a faulty reading. A thorough understanding of the system is necessary to know exactly what is being measured. The method is susceptible to noise from a nearby electrical apparatus and is less effective for very "low" grounds (extraneous elements in the reading become comparatively large).

A final disadvantage of the clamp-on ground tester is that there is no built-in proof for the method. With fall-of-potential testing, the operator can check the results by increasing the probe spacings. With the clamp-on method, the results are accepted on "faith."

As noted previously, a clamp-on ground tester can be augmented with other test instruments to improve confidence in test results. It is, however, an important part of the ground testing tool kit, along with a fall-of-potential tester. The clamp-on tester can be used to identify problems quickly. A fall-of-potential tester can then be used confirm the results of those problems. This approach allows the operator to save time and improve accuracy.

Figure E.3 is an example of how the clamp-on method can yield inaccurate measurements and of why a knowledge of the system is critical to making the correct test.

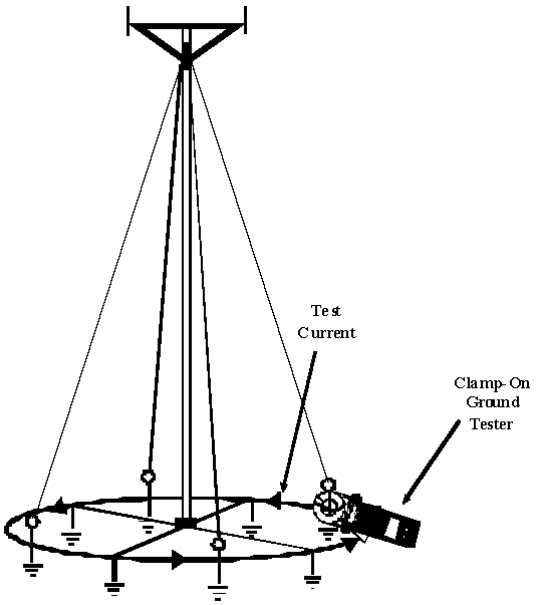


**Figure E.3—Cellular tower application**

Figure E.3 shows the problems with trying to use a clamp-on ground tester on a cellular tower. Cellular towers are grounded at the base, with each guy wire grounded and all of them connected together in a ring of grounds.

If the operator clamps around the head of one of the guy wire grounds, the test current will simply complete the circuit in the ground ring and *not* through the soil. Note that the test current circulates through the conductor that connects the individual elements (ground rods) that comprise the ring. As such, the clamp-on ground tester will *not* be measuring the quality of the ground system. The reading will actually be a reading of the resistance of the "loop."


Copyright © 2012 IEEE. All rights reserved.

Copyright The Institute of Electrical and Electronics Engineers, Inc.
Provided by IHS under license with IEEE
No reproduction or networking permitted without license from IHS

Order Number: 02120914
Sold to:EGAT [700166108393] - VARRIS.Y@EGAT.CO.TH,
Not for Resale,2016-09-15 03:57:44 UTC

## E.3 Computer-based ground meter—modified fall-of-potential method

The fall-of-potential method is the most popular method of measuring the resistance of ground electrodes and has been widely used for many years. However, there are many variables and situations that can distort test results and greatly reduce the accuracy of these measurements. In recent years, a computer-based ground meter has been developed that can moderate the effect the variables have on test results and improve the accuracy of the measurements.

A computer-based ground meter typically consists of a computer, a variable frequency (0 Hz to 2500 Hz) current source capable of generating 2 A to 20 A, and a multichannel data acquisition system with necessary probes and interconnecting wiring. This method injects a series of transient electric currents between the ground grid under test and a remote current probe with ground potential differences being measured at multiple locations. Filters are used to remove frequencies outside the test signal frequency, test leads are calibrated, and other measures are taken to minimize outside influences on the data being measured. The waveform sampling of the test current and resulting potential differences are recorded by the computer including the phase angle.

Prior to performing the test, the ground grid configuration and test probe locations are drawn using an editor provided with the computer software. Accurately depicting the configuration of the ground grid and test probe locations to maintain good accuracy in the measurements is important.

With the ground grid modeled and test results recorded, the computer software compares the modeled voltage gradients with the recorded test voltage gradients and performs a statistical analysis to determine the ground resistance that best fits the ground grid model with the test data.

The major advantages of the computer-based ground meter include the following:

a) The ground grid does not need to be isolated from other ground sources.
b) The current electrode can be positioned a minimum of two times the grid diagonal compared with five times the grid diagonal distance required by the traditional fall-of-potential method.
c) The data being recorded are less susceptible to interference, harmonics, and induced voltages.

While the computer-based ground meter does have several advantages that are outlined in the previous list, the user should note that there are still areas that could moderate the accuracy of this method, such as follows:

— An accurate model of the ground grid configuration and test probe locations is essential for good results
— Above-grade or below-grade metallic paths
— Nonhomogeneous soil conditions


Copyright © 2012 IEEE. All rights reserved.

Copyright The Institute of Electrical and Electronics Engineers, Inc.
Provided by IHS under license with IEEE
No reproduction or networking permitted without license from IHS

Order Number: 02120914
Sold to:EGAT [700166108393] - VARRIS.Y@EGAT.CO.TH,
Not for Resale,2016-09-15 03:57:44 UTC

# Annex F

(informative)

# Bibliography

Bibliographical references are resources that provide additional or helpful material but do not need to be understood or used to implement this standard. Reference to these resources is made for informational use only.

[B1] AASHTO M 6-2008, Standard Specification for Fine Aggregate for Portland Cement Concrete.[7]

[B2] Abledu, K. O., and D. N. Laird, "Measurement of substation rock resistivity," *IEEE Transactions on Power Delivery*, vol. 7, no. 1, pp. 295–300, Jan. 1992.

[B3] Accredited Standards Committee C2, National Electrical Safety Code® (NESC®).

[B4] ASTM C25-2011, Standard Test Methods for Chemical Analysis of Limestone, Quicklime, and Hydrated Lime.[8]

[B5] ASTM C117-2004, Standard Test Method for Materials Finer than 75-µm (No. 200) Sieve in Mineral Aggregates by Washing.

[B6] ASTM C125-2012, Standard Terminology Relating to Concrete and Concrete Aggregates.

[B7] ASTM C136-2006, Standard Test Method for Sieve Analysis of Fine and Coarse Aggregates.

[B8] ASTM C615-2003, Standard Specification for Granite Dimension Stone.

[B9] ASTM D448-2008, Standard Classification for Sizes of Aggregate for Road and Bridge Construction.

[B10] ASTM G57-2012, Standard Test Method for Field Measurement of Soil Resistivity Using the Wenner Four-Electrode Method.

[B11] Bellaschi, P. L., "Impulse and 60 cycle characteristics of driven grounds,"*AIEE Transactions*, vol. 60, pp. 123–128, Mar. 1941.

[B12] Blattner, C. J., "Analysis of soil resistivity test methods in two-layer earth," *IEEE Transactions on Power Apparatus and Systems*, vol. PAS-104, no. 12, pp. 3603–3608, Dec. 1985.

[B13] Blattner, C. J., "Prediction of soil resistivity and ground rod resistance for deep ground electrodes," *IEEE Transactions on Power Apparatus and Systems*, vol. PAS-99, no. 5, pp. 1758–1763, Sept./Oct. 1980.

[B14] Blattner, C. J., "Study of driven ground rods and four point soil resistivity data," *IEEE Transactions on Power Apparatus and Systems*, vol. PAS-101, no. 8, pp. 2837–2850, Aug. 1982.

[B15] Blattner, C. J., and F. Dawalibi, "Earth resistivity measurement interpretation techniques," *IEEE Transactions on Power Apparatus and Systems*, vol. PAS-103, no. 2, pp. 374–382, Feb. 1984.

[B16] Carmen, W. D., and D. J. Woodhouse, "Performance evaluation of series impedance insulation used as earthing system safety mitigation measures," *IEEE Powercon*, Dec. 2000, Paper 0-7803-6338-8/00.

[B17] Carson, J. R., "Wave propagation in overhead wires with ground return," *Bell System Technical Journal*, 1926.

[7] AASHTO publications are available from the American Association of State Highway and Transportation Officials: Industry Standards & Regulations (http://www.transportation.org/).
[8] ASTM publications are available from the American Society for Testing and Materials (http://www.astm.org/).


Copyright © 2012 IEEE. All rights reserved.

Copyright The Institute of Electrical and Electronics Engineers, Inc.
Provided by IHS under license with IEEE
No reproduction or networking permitted without license from IHS

Order Number: 02120914
Sold to:EGAT [700166108393] - VARRIS.Y@EGAT.CO.TH,
Not for Resale,2016-09-15 03:57:44 UTC

[B18] Curdts, E. B., "Some of the fundamental aspects of ground resistance measurements," *AIEE Transactions*, vol. 77, Part I, pp. 760, 1958.

[B19] Dawalibi, F., and N. Barbeito, "Measurements and computations of the performance of grounding systems buried in multilayer soils," *IEEE Transactions on Power Delivery*, vol. 6, no. 4, pp. 1483–1490, Oct. 1992.

[B20] Dawalibi, F., and R. D. Mukhedkar, "Ground electrode resistance measurement in non-uniform soils," *IEEE Transactions*, vol. PAS-93, no. 1, pp. 109–116, Jan 1974.

[B21] Dawalibi, F., and R. D. Mukhedkar, "Optimum design of substation grounding in two layer earth structure," Part I, Analytical Study, *IEEE Transactions*, Power Apparatus Systems—94, no. 2, pp. 252–261, Mar./Apr. 1975.

[B22] Dawalibi, F., and R. D. Mukhedkar, "Resistance measurement of large grounding systems," *IEEE Transactions on Power Apparatus and Systems*, vol. PAS-98, no. 6, pp. 2348–2354, Nov./Dec. 1979.

[B23] Dawalibi, F., and R. D. Mukhedkar, "Transferred earth potentials in power systems," *IEEE Transactions*, IEEE Power Engineering Society Winter Meeting, New York, NY, Paper no. F 77 196-9, Jan. 30–Feb. 4, 1977.

[B24] Devgan, S. S., and E. R. Whitehead, "Analytical models for distributed grounding systems," *IEEE Transactions*, vol. PAS-73, pp. 1763–1770, Sept./Oct. 1973.

[B25] Dick, E. P., C. C. Erven, and S. M. Harvey, "Grounding system tests for analysis of fault induced voltages on communication cables," *IEEE Transactions on Power Apparatus and Systems*, vol. PAS-98, no. 6, pp. 2115–2125, Nov./Dec. 1979.

[B26] Endrenyi, J., "Evaluation of resistivity tests for design of station grounds in non-uniform soil," *AIEE Transactions*, pp. 966–970, 1963.

[B27] EPRI EL-2699, *Transmission Line Grounding*, Chapter 9 (Field measurement techniques), Safe Engineering Services, Oct. 1982.[9]

[B28] Fadeev, D. K., and V. N. Faddeeva, *Computational Methods of Linear Algebra*. San Francisco, CA: W.H. Freeman & Co., 1963.

[B29] Georgia Institute of Technology National Electric Energy Testing and Research Application Center (NEETRAC) Project 06-209, Hill, R. and Patel, S., principal investigators, 2008.

[B30] Giao, T. N., and M. P. Sarma, "Effect of two layer earth on the electrical field near HVDC electrodes," *IEEE Transactions on Power Apparatus Systems*, vol. PAS-91, no. 6, pp. 2346–2365, Nov. 1972.

[B31] Gill A. S., "High-current method of testing ground grid integrity," *NETA WORLD*, International Testing Association, vol. 10, no. 2, winter 1988–1989.

[B32] Gish, O. H., and W. J. Rooney, "Measurement of resistivity of large masses of undisturbed earth," *Terrestrial Magnetism and Atmospheric Electricity*.

[B33] Hammond, E., and T. D. Robson, "Comparison of electrical properties of various cements and concretes," *The Engineer*, vol. 199, no. 5165, pp. 78–80, Jan. 1955.

[B34] Harrison, L. H., "The effect of reactive components in the measurement of grounding circuits," *AIEE Transactions*, vol. 72, part II, pp. 340–345, 1953.

[B35] IEEE Std 4™-1995, IEEE Standard Techniques for High-Voltage Testing.[10,11]

[B36] IEEE Std 81™-1983, IEEE Guide for Measuring Earth Resistivity, Ground Impedance, and Earth Surface Potentials of a Ground System.

[9] EPRI publications are available from the Electric Power Research Institute (http://www.my.epri.com/).
[10] The IEEE standards or products referred to in this clause are trademarks of The Institute of Electrical and Electronics Engineers, Inc.
[11] IEEE publications are available from The Institute of Electrical and Electronics Engineers (http://standards.ieee.org/).


Copyright © 2012 IEEE. All rights reserved.

Copyright The Institute of Electrical and Electronics Engineers, Inc.
Provided by IHS under license with IEEE
No reproduction or networking permitted without license from IHS

Order Number: 02120914
Sold to:EGAT [700166108393] - VARRIS.Y@EGAT.CO.TH,
Not for Resale,2016-09-15 03:57:44 UTC

[B37] IEEE Std 81.2™-1991, IEEE Guide to Measurement of Impedance and Safety Characteristics of Large, Extended Or Interconnected Grounding Systems.

[B38] IEEE Std 142™-2007, IEEE Recommended Practice for Grounding of Industrial and Commercial Power Systems (IEEE Green Book).

[B39] IEEE Std 367™-2012, IEEE Recommended Practice for Determining the Electric Power Station Ground Potential Rise and Induced Voltage From a Power Fault.

[B40] IEEE Std 665™-1995, IEEE Guide for Generating Station Grounding.

[B41] IEEE Tutorial Course 86 EH0253-5-PWR, "Practical applications of ANSI/IEEE Standard 80-1986, IEEE Guide for Safety, Chapter 2 (Soil Resistivity Analysis)."

[B42] Kinyon, A. L., "Earth resistivity measurements for grounding grids," *AIEE Transactions on Power Apparatus and Systems*, vol. 20, pp. 795–800, Dec. 1961.

[B43] Lancaster-Jones, E., "The earth-resistivity method of electrical prospecting," *The Mining Magazine*, June 1930.

[B44] Larsen, S. L., and D. E. Nordell, "The measurement of substation ground resistance and its use in determining protection for metallic communication circuits," *IEEE Transactions on Power Apparatus Systems*, vol. 94, no. pp. 1666–1673, Sept./Oct. 1975.

[B45] Megger, *Getting Down to Earth*, Pub 25-J. Chandler, AZ: James G. Biddle Co., Nov. 2005.

[B46] Meliopoulos, A. P., S. Patel, and G. J. Cokkonides, "A new method and instrument for touch and step voltage measurements," *IEEE Transactions on Power Delivery*, vol. 9, no. 4, pp. 1850–1860, Oct. 1994.

[B47] Meliopoulos, A. P., S. Patel, G. J. Cokkonides, H. Abdallah, and S. Duong, "A pc based ground impedance instrument," *IEEE Transactions on Power Delivery*, vol. 8, no. 3, pp. 1095–1106, July 1993.

[B48] Meliopoulos, A. P., R. P. Webb, E. B. Joy, and S. Patel, "Computation of maximum earth current in substation switchyards," *IEEE Transactions on Power Apparatus and Systems*, vol. PAS-102, no. 9, pp. 3131–3139, Sept. 1983.

[B49] NFPA 70E-2012, Standard for Electrical Safety in the Workplace.[12]

[B50] Palmer, L. S., "Examples of geoelectric surveys," *IEE*, vol. 106, part A, June 1959.

[B51] Patel, S. G., M. McDonald, and Z. Brown, "Georgia Power Company Develops a Method for testing neutral integrity," *Proceedings T&D World Exposition*, Mar. 29–31, 1995.

[B52] Patel, S. G., "Complete field analysis of substation ground grid by applying a continuous low voltage fault," *IEEE Transactions of Power Apparatus and Systems*, vol. PAS 104, no. 8, pp. 2238–2243, Aug. 1994.

[B53] Patel, S. G., Principal Investigator, *Seasonal Variations of Grounding Parameters by Field Tests,* EPRI TR-100863, Project 1494-08, July 1992.

[B54] Pillai, P. R., and E. P. Dick, "A review on testing and evaluating substation grounding systems," *IEEE Transactions on Power Delivery*, vol. 7, no. 1, pp. 53–61, Jan. 1992.

[B55] Rudenberg, R., "Fundamental considerations on ground currents," *Electrical Engineering*, vol. 64, Jan. 1945.

[B56] Southey, R. D. and F. P. Dawalibi, "Improving the reliability of power systems with more accurate grounding system resistance estimates," *2002 International Conference on Power System Technology Proceedings*, vol. 1, pp. 98–105, Oct. 2002.

[B57] Sunde, E. D., *Earth Conduction Effects in Transmission Systems*. New York: Dover Publications, 1968.

[12] NFPA publications are available from the National Fire Protection Association (http://www.nfpa.org/).


Copyright © 2012 IEEE. All rights reserved.

Copyright The Institute of Electrical and Electronics Engineers, Inc.
Provided by IHS under license with IEEE
No reproduction or networking permitted without license from IHS

Order Number: 02120914
Sold to:EGAT [700166108393] - VARRIS.Y@EGAT.CO.TH,
Not for Resale,2016-09-15 03:57:44 UTC

[B58] Tagg, G. F., "Measurement of the resistance of physically large earth-electrode systems," *Proceedings of the IEE*, vol. 117, no. 11, pp. 2185–2190, 1970.

[B59] Thapar, B., and E. T. B. Gross, "Grounding grids for high-voltage stations, part IV, resistance of grounding grids in non uniform soil," *IEEE Transactions on Power Apparatus and Systems*, vol. PAS-82, pp. 782–788, Oct. 1963.

[B60] Thug, G. F., *Earth Resistances*. London: Georges Newnes Limited, 1964.

[B61] Thug, G. F., "Measurement of the resistance of an earth electrode system covering a large area," *IEEE Proceedings*, vol. 116, no. 3, Mar. 1969.

[B62] Wenner, F., "A method of measuring resistivity," *National Bureau of Standards*, Scientific Paper, Report no. 258, vol. 12, no. 3, pp. 469–482, Feb. 1916.

[B63] Zohdy, Adel A. R., "A new method for the automatic interpretation of Schlumberger and Wenner sounding curves," *Geophysics*, vol. 54, no. 2, pp. 245–253, Feb. 1989.


Copyright © 2012 IEEE. All rights reserved.
Copyright The Institute of Electrical and Electronics Engineers, Inc.
Provided by IHS under license with IEEE
No reproduction or networking permitted without license from IHS
Order Number: 02120914
Sold to:EGAT [700166108393] - VARRIS.Y@EGAT.CO.TH,
Not for Resale,2016-09-15 03:57:44 UTC