Source: ANSI/IEEE C63.19 ***Editor***

This draft has been prepared in response to comments received during the forth recirculation ballot of ANSI C63.19. This version is built on revision draft 3.10, with all changes from previous versions accepted.

The document is subject to change until it receives ANSI approval and is published.

DRAFT

Copyright © 2006 IEEE. All rights reserved.
This is a draft, subject to change until final approval by ANSI and publication.

--`,,```,,,,````-`-`,,`,,`,`,,`---

Copyright The Institute of Electrical and Electronics Engineers, Inc.
Provided by IHS under license with IEEE
No reproduction or networking permitted without license from IHS Not for Resale

American National Standard for Methods of Measurement of Compatibility between Wireless Communications Devices and Hearing Aids

Accredited Standards Committee on Electromagnetic Compatibility, C63
accredited by the
American National Standards Institute
Secretariat
Institute of Electrical and Electronic Engineers, Inc

January 10, 2006

Abstract: Uniform methods of measurement for compatibility between hearing aids and wireless communications devices are set forth.
Keywords: hearing aid, hearing aid compatibility (HAC), wireless communications device, personal communications service (PCS), American National Standard, electromagnetic compatibility, operational compatibility, measurement methods

Copyright © 2006 by the Institute of Electrical and Electronics Engineers, Inc.
345 East 47th Street
New York, NY 10017, USA
All Rights Reserved

This is an unapproved draft of a proposed IEEE Standard, subject to change. Permission is hereby granted for IEEE Standards Committee participants to reproduce this document for purposes of IEEE standardization activities. If this document is to be submitted to ISO or IEC, notification shall be given to the IEEE Copyright Administrator. Permission is also granted for member bodies and technical committees of ISO and IEC to reproduce this document for purposes of developing a national position. Other entities seeking permission to reproduce portions of this document for these or other uses must contact the IEEE Standards Department for the appropriate license. Use of information contained in the unapproved draft is at your own risk.

IEEE Standards Department
Copyright and Permissions
445 Hoes Lane
PO Box 1331
Piscataway, NJ 08855-1331
USA

DRAFT
Copyright © 2006 IEEE. All rights reserved.
This is a draft, subject to change until final approval by ANSI and publication.

--`,,```,,,,````-`-`,,`,,`,`,,`---

Copyright The Institute of Electrical and Electronics Engineers, Inc.
Provided by IHS under license with IEEE
No reproduction or networking permitted without license from IHS Not for Resale

Foreword

(This introduction is not a part of C63.19-2005, American National Standard for Methods of Measurement of Compatibility between Wireless Communications Devices and Hearing Aids.)

In the fall of 1995 the Federal Communications Commission (FCC) initiated a Steering Committee to initiate a summit on Hearing Aid Compatibility and Accessibility to Digital Wireless Telecommunications. The goal of the summit was to formalize and continue discussions among the three key affected interests in this issue; organizations representing people with hearing loss, hearing aid manufacturers, and the digital wireless telephone industry. The ultimate purpose of the summit was to find a resolution of the interference problem that was acceptable to the industries involved.

A summit meeting was held on January 3-4, 1996, in Washington, D.C. At this summit meeting three working groups were formed to pursue issue resolution. Subsequently, the Long-Term Solutions User and Bystander Interference Group reached a consensus that a standards project was needed to document the consensus definition of and method of measurement for Hearing Aid Compatibility and Accessibility to Wireless Telecommunications. Subsequently ANSI C63 was petitioned to undertake the joint standards projects documenting the methods of measurement and defining the limits for Hearing Aid Compatibility and Accessibility to Wireless Telecommunications.

At its April 1996 meeting, ANSI C63 established a task group under its subcommittee on medical devices (SC 8). The charge to this task group (TC C63.19) was to develop such standards in cooperation with representatives of organizations representing people with hearing loss, hearing aid manufacturers, the digital wireless telephone industry and other interested parties. The 2001 version of this document was the result of that committee's efforts.

The FCC adopted this standard to provide the technical requirements for its Report and Order establishing mandatory requirements for wireless hearing aid compatibility on July 10, 2003.[1] Following the adoption by the FCC and for several reasons, including technical changes in WDs and hearing aids and new understanding coming from experience gained in working with the 2001 version of this standard, a new revision effort was started. The result of this revision effort culminated in the production of this version of the standard.

Membership of Accredited Standards Committee on Electromagnetic Compatibility, C63

At the time that the Accredited Standards Committee on Electromagnetic Compatibility, C63, approved this standard the officers of ANSI ASC C63 were:

Ralph M. Showers, Chairman **Donald N. Heirman,** Vice Chairman
Robert Pritchard, Secretary

At the time that the ANSI ASC C63, approved this standard the chairs of the working group were:

H. Stephen Berger, Chairman **Tom Victorian,** Vice Chairman

The members of ANSI ASC C63 who participated on the balloting group were:

Organization Represented *Name of Representative*
{ Particpants on Balloting Group}

[1] FCC 03-168.

DRAFT
Copyright © 2006 IEEE. All rights reserved.
This is a draft, subject to change until final approval by ANSI and publication.

Copyright The Institute of Electrical and Electronics Engineers, Inc.
Provided by IHS under license with IEEE
No reproduction or networking permitted without license from IHS Not for Resale

Contents

Section Page

1. OVERVIEW 11
- 1.1 Scope 11
- 1.2 Purpose 11
- 1.3 Organization and Use of the Document 12

2. REFERENCES 15

3. DEFINITIONS, ACRONYMS AND ABBREVIATIONS 18
- 3.1 Definitions 18
- 3.2 Acronyms and Abbreviations 20

4. WIRELESS DEVICE, RF EMISSIONS TEST 22
- 4.1 Measured RF interference level 23
- 4.2 Test Equipment and Facilities 24
  - 4.2.1 Test Equipment 25
  - 4.2.2 Near-Field Measurement System 25
    - 4.2.2.1 Probe Modulation Factor 25
- 4.3 Test Setup and Validation 25
  - 4.3.1 Device Support and Check for Reflections 25
  - 4.3.2 Setup Validation 26
    - 4.3.2.1 Validation Procedures using Dipoles 26
      - 4.3.2.1.1 Validation Procedure 27
      - 4.3.2.1.2 Test Cases 28
        - 4.3.2.1.2.1 Measurement of Real or Emulated Signal 28
        - 4.3.2.1.2.2 Measurement of CW and AM Modulated Signals 28
      - 4.3.2.1.3 Procedure using Regular Dipoles 28
      - 4.3.2.1.4 Procedure using Planar Dipoles 28
  - 4.3.3 WD Setup and Use 29
- 4.4 Near-Field Test Procedure 30
  - 4.4.1 Detailed Near-Field Test Procedure 31
    - 4.4.1.1 Pre-Test Procedure 31
    - 4.4.1.2 Test Procedure 33
      - 4.4.1.2.1 Manual Scanning Method 33
      - 4.4.1.2.2 Automated Scanning Method 38

5. HEARING AID RF NEAR-FIELD IMMUNITY TEST 40
- 5.1 Test Facilities and Equipment 40
  - 5.1.1 General Test Conditions 40
    - 5.1.1.1 Ambient Conditions 40
    - 5.1.1.2 Power Supply Voltage 40
    - 5.1.1.3 Test Sites 40
  - 5.1.2 Test Equipment 40
- 5.2 Test Setup and Validation 41
  - 5.2.1 Hearing Aid Near-Field Immunity Test Setup 41
  - 5.2.2 Check for RF Interference to Test Equipment 41
  - 5.2.3 Characterization of Tubing Acoustic Attenuation and Resonances (INFORMATIVE) 42
  - 5.2.4 Audio Input Source Setup 42
  - 5.2.5 RF Field Strength Validation 42

DRAFT
Copyright © 2006 IEEE. All rights reserved.
This is a draft, subject to change until final approval by ANSI and publication.

--`,,```,,,,````-`-`,,`,,`,`,,`---

Copyright The Institute of Electrical and Electronics Engineers, Inc.
Provided by IHS under license with IEEE
No reproduction or networking permitted without license from IHS Not for Resale

5.2.6 Pre-Tests Required for the Hearing Aid Under Test (INFORMATIVE) 42
5.3 RF Immunity Test Procedure - Primary 42
5.4 RF Immunity Test Procedure – Alternate 49
5.4.1 WB TEM RF Immunity test procedures 50

6. WIRELESS DEVICE T-COIL SIGNAL TEST 53

6.1 Test Facilities and Equipment 53
6.1.1 Test Equipment 53
6.1.1.1 Foundational Test Equipment 53
6.1.1.2 Additional Test Equipment 53
6.2 Test Configurations and Setup 53
6.2.1 Ambient and Test System Noise 55
6.2.2 Base Station Simulator Method 55
6.2.3 Manufacturer's Test Mode Method 55
6.2.4 Calibration of the Probe Coil 55
6.3 Test Procedure for T-Coil Signal 55
6.3.1 Test Flow for T-Coil Signal Test 58
6.3.2 Test Signals 59
6.3.2.1 Reference Input Level 59
6.3.3 Measurement of Source Magnitude 60
6.3.4 Measurement of Source Magnitude and Direction 60
6.3.4.1 Setup of Receiver Assembly 60
6.3.4.1.1 Auxiliary Induction Sources 60
6.3.4.2 Desired Plus Undesired T-Coil Signal Measurement 60
6.3.4.3 Undesired Audio Band Magnetic Signal Measurement 61
6.3.4.4 Probe Coil Position and Orientation 61
6.3.5 Calculation of Signal Quality 61
6.3.6 Magnetic Field Frequency Response Measurement 61
6.4 Broadband Test Procedure - Alternate 61
6.4.1 Test Procedure for Broadband Test 61
6.4.2 Calculation of Signal Magnitude 62
6.4.3 Calculation of Frequency Response 62
6.4.4 Calculation of Signal Quality 62

7. PERFORMANCE 64

7.1 Articulation weighting factor (AWF) 64
7.2 Audio Coupling Mode 64
7.3 T-Coil Coupling Mode 69
7.3.1 T-Coil Coupling Field Intensity 69
7.3.1.1 Axial Field Intensity 69
7.3.1.2 Radial Field Intensity 69
7.3.2 Frequency Response 69
7.3.3 Signal Quality 71
7.4 Accessories and Options 71
7.5 Product Line Compliance 72

8. CALIBRATION AND MEASUREMENT UNCERTAINTY 73

8.1 General 73
8.2 Ambient Conditions 73
8.3 Specific Calibration Requirements 73
8.4 Measurement Uncertainty 73

9. TEST REPORT 74

DRAFT
Copyright © 2006 IEEE. All rights reserved.
This is a draft, subject to change until final approval by ANSI and publication.

Copyright The Institute of Electrical and Electronics Engineers, Inc.
Provided by IHS under license with IEEE
No reproduction or networking permitted without license from IHS Not for Resale

9.1	**Test Plan**	**74**
9.2	**Applicable Standards**	**74**
9.3	**Equipment Unit Tested**	**74**
9.4	**Test Configuration**	**74**
9.5	**List of Test Equipment**	**74**
9.6	**Units of Measurement**	**74**
9.7	**Location of Test Site**	**75**
9.8	**Measurement Procedures**	**75**
9.9	**Reporting Measurement Data**	**75**
9.10	**General and Special Conditions**	**75**
9.11	**Summary of Results**	**75**
9.12	**Required Signatures**	**75**
9.13	**Test Report Annexes**	**75**
9.14	**Test Report Disposition**	**76**
10.	**BIBLIOGRAPHY**	**77**

DRAFT

Copyright © 2006 IEEE. All rights reserved.

This is a draft, subject to change until final approval by ANSI and publication.

Copyright The Institute of Electrical and Electronics Engineers, Inc.
Provided by IHS under license with IEEE
No reproduction or networking permitted without license from IHS

Not for Resale

ANNEX A.	**DEFINITION OF REFERENCE AXES - (NORMATIVE)**	**79**
A.1	**Axes definition for hearing aid RF immunity tests**	**79**
A.2	**WD RF emission measurements reference and plane**	**80**
A.2.1	**Gauge blocks for setting measurement distance to probe**	**81**
A.3	**T-Coil measurement points and reference plane**	**83**
ANNEX B.	**TEST FREQUENCIES - (NORMATIVE)**	**85**
B.1	**Acoustic test frequencies**	**85**
B.2	**Test channels and frequencies**	**85**
ANNEX C.	**EQUIPMENT AND SETUP CALIBRATION - (NORMATIVE)**	**87**
C.1	**Test enclosures**	**87**
C.1.1	**RF test enclosures**	**87**
C.2	**Audio input source**	**87**
C.3	**Calibration of RF electric and magnetic field probes**	**87**
C.3.1	**RF field probe modulation response**	**88**
C.4	**Calibration of dipoles**	**89**
C.4.1	**Equipment**	**89**
C.4.2	**Calibration procedure**	**89**
C.4.3	**Dipole calibration procedure for wireless devices**	**91**
C.5	**Calibration of hearing aid probe coil**	**92**
C.5.1	**Linearity**	**93**
C.5.2	**Signal to noise ratio of the calibration system**	**93**
C.5.3	**Coil sensitivity**	**94**
C.5.3.1	**Coil sensitivity - calculation method**	**94**
C.5.3.2	**Coil sensitivity - laboratory calibration**	**94**
C.6	**Selection and calibration of acoustic transmission line (Informative)**	**95**
C.6.1	**Selection of acoustic transmission line**	**95**
C.7	**Microphone subsystem requirements**	**96**
ANNEX D.	**TEST EQUIPMENT SPECIFICATIONS - (NORMATIVE)**	**97**
D.1	**Acoustic damper**	**97**
D.2	**Audio frequency analyzer or wave analyzer**	**97**
D.3	**Audio signal generator**	**97**
D.4	**Bandpass filter**	**97**
D.5	**Dipole, resonant**	**97**
D.5.1	**Broadband dipoles**	**99**
D.5.1.1	**Dipoles for 800 to 950 MHz**	**99**
D.5.1.2	**Dipoles for 1.6 to 2.5 GHz**	**99**
D.5.1.3	**Wireless device lab verification dipoles**	**99**
D.5.1.4	**Dipole validation theoretical modeling**	**101**
D.5.1.4.1	**Dipoles**	**101**
	D.5.1.4.1.1 Conditions for validation	102
	D.5.1.4.1.2 Conclusion	102
D.5.2	**Example planar broadband dipoles**	**108**
D.5.2.1	**Example return loss performance data**	**110**
D.5.2.2	**Balance**	**112**
D.6	**Directional coupler**	**113**
D.7	**Frequency generator**	**113**

DRAFT

Copyright © 2006 IEEE. All rights reserved.
This is an unapproved IEEE Standards Department Draft, subject to change.

Copyright The Institute of Electrical and Electronics Engineers, Inc.
Provided by IHS under license with IEEE
No reproduction or networking permitted without license from IHS Not for Resale

D.8	Hearing aid probe coil	113
D.9	Helmholtz calibration coils	114
D.9.1	Helmholtz coil magnetic field generation	114
D.10	Probe, near-field, E-field	116
D.11	Probe, near-field, H-field	116
D.12	RF cables	116
D.13	RF Communications test set	116
D.14	RF power amplifier	116
D.15	RF Signal generator	117
D.16	RF wattmeter	117
D.17	T-Coil integrator	117
D.17.1	Full-band integration	117
D.17.2	Half-band integration (T-Coil response)	117
D.18	TEM cell	120
D.19	True RMS voltmeter	120

ANNEX E.	SAMPLE MEASUREMENT UNCERTAINTY ESTIMATES - (INFORMATIVE)	121
E.1	WD near-field emissions measurement uncertainty	121
E.1.1	Primary uncertainty factors	121
E.1.2	Sample estimation	122
E.2	Hearing aid near-field immunity measurement uncertainty	123
E.2.1	Primary uncertainty contributors	123
E.2.2	Sample estimation	124
E.2.3	Positioning variability	124
E.2.3.1	Resonant dipole field gradients	124
E.2.3.1.1	At 1900 MHz and 10 mm separation distance	124
E.2.3.1.2	At 1900 MHz and 20 mm separation distance	124
E.2.3.1.3	Uncertainty due to positioning variability	125
E.3	WD audio band measurement uncertainty	126
E.3.1	Primary uncertainty factors	126
E.4	Sample estimation	126

ANNEX F.	USE OF HELMHOLTZ COILS FOR CALIBRATION - (INFORMATIVE)	127
F.1	Introduction	127
F.2	Axial field-strength accuracy	128
F.2.1	Coil radius and spacing error effects	129
F.2.2	Coil current and turns errors	130
F.3	Radial field-strength	131
F.3.1	Calculating radial field strength	131
F.3.2	Determining coil size	132
F.3.3	Maximum frequency of operation	133
F.3.4	Effect of loading	134
F.4	Summary	134
F.5	References	134

ANNEX G.	RF ENVELOPE COMPARISON FOR US WD SYSTEMS - (INFORMATIVE)	135
G.1	Introduction	135
G.2	AMPS	135

DRAFT
Copyright © 2006 IEEE. All rights reserved.
This is an unapproved IEEE Standards Department Draft, subject to change.

Copyright The Institute of Electrical and Electronics Engineers, Inc.
Provided by IHS under license with IEEE
No reproduction or networking permitted without license from IHS Not for Resale

G.3	NADC	135
G.4	GSM and PCS	136
G.5	CDMA	137
G.6	IDEN™	139
ANNEX H.	EXPLANATION OF RATIONALE USED IN THIS STANDARD - (INFORMATIVE)	140
ANNEX I.	MEASUREMENT OF PEAK POWER ACROSS MULTIPLE AIRLINK TECHNOLOGIES (INFORMATIVE)	141
I.1	Introduction	141
I.2	RF power measurement terminology	142
I.3	Statistical RF power measurement	142
I.4	Peak envelope power vs. airlink technology	143
I.4.1	CW, AMPS and GSM	144
I.4.1.1	Amplitude modulation (double sideband)	144
I.4.2	TDMA (IS-136)	145
I.4.3	*i*DEN	146
I.4.4	CDMA (IS-95)	147
I.4.5	WCDMA (UMTS)	148
I.4.6	Summary	148
I.5	Conclusion	149
ANNEX J.	SAMPLE HAC APPLICATION FORMS (INFORMATIVE)	150
J.1	E-Field technical report	151
J.2	H-Field technical report	152
REVISION HISTORY		154

DRAFT
Copyright © 2006 IEEE. All rights reserved.
This is an unapproved IEEE Standards Department Draft, subject to change.

Copyright The Institute of Electrical and Electronics Engineers, Inc.
Provided by IHS under license with IEEE
No reproduction or networking permitted without license from IHS Not for Resale

American National Standard for Methods of Measurement of Compatibility between Wireless Communications Devices and Hearing Aids

DRAFT

Copyright © 2006 IEEE. All rights reserved.
This is a draft, subject to change until final approval by ANSI and publication.

--`,,```,,,,````-`-`,,`,,`,`,,`---

Copyright The Institute of Electrical and Electronics Engineers, Inc.
Provided by IHS under license with IEEE
No reproduction or networking permitted without license from IHS Not for Resale

1. Overview

1.1 Scope

This standard applies to both wireless communications devices (WDs) and hearing aids. It sets forth uniform methods of measurement and parametric requirements for the electromagnetic and operational compatibility and accessibility of hearing aids used with wireless communications devices, including cordless, cellular, Personal Communications Service (PCS) phones and Voice over Internet Protocol (VoIP) devices, operating in the range of 800 MHz to 3 GHz. However, this version is focused on existing services, which are in common use. Accordingly, in this version tests are provided for services in the 800 - 950 MHz and 1.6 - 2.5 GHz frequency bands. Future versions may add tests for other frequency bands, as they come into more common use.

This standard is intended to apply to all types of hearing aids with acoustic output, including, as examples, behind-the-ear (BTE), in-the-ear (ITE), in-the-canal (ITC), and completely-in-the-canal (CIC) types. Test methods are provided for hearing aids operating in acoustic (microphone input) mode or in T-coil input mode.

The field levels called for in various places shall be maintained within the limits for RF safety, set forth in ANSI C95.1-1999, IEEE Standard for Safety Levels with Respect to Human Exposure to Radio Frequency Electromagnetic Fields, 3 kHz to 300 GHz.

1.2 Purpose

The purpose of this standard is to establish categories for hearing aids and for WDs that can indicate to healthcare practitioners and hearing aid users, which hearing aids are compatible with which WDs and to provide tests that can be used to assess the electromagnetic characteristics of hearing aids and WDs and assign them to these categories. The various parameters required, in order to demonstrate compatibility and accessibility, are measured. The design of the standard is such that when a hearing aid and WD achieve one of the categories specified, as measured by the methodology of this standard, the indicated performance is realized.

In order to provide for the usability of a hearing aid with a WD several factors must be coordinated:

- Radio frequency (RF) measurements of the near-field electric and magnetic fields emitted by a WD to categorize these emissions for correlation with the RF immunity of a hearing aid.
- Magnetic field measurements of a WD emitted via the audio transducer associated with the T-coil mode of the hearing aid, for assessment of hearing aid performance.
- Measurements with the hearing aid and a simulation of the categorized WD T-coil emissions to assess the hearing aid RF immunity in the T-coil mode.

The WD's radio frequency (RF) and audio band emissions are measured. Hence, the following are measurements made for the WDs:

1. RF E-Field emissions.
2. RF H-Field emissions.
3. T-Coil mode, magnetic signal strength in the audio band.
4. T-Coil mode, magnetic signal and noise articulation index.
5. T-Coil mode, magnetic signal frequency response through the audio band.

Corresponding to these quantities the hearing aid is measured for:

1. RF immunity in microphone mode.
2. RF immunity in T-Coil mode.

The hearing aid T-Coil reception characteristics are also important when assuring the usability of the T-coil mode. When these characteristics are coordinated, the goals of compatibility and accessibility are accomplished.

DRAFT

Copyright © 2006 IEEE. All rights reserved.

This is a draft, subject to change until final approval by ANSI and publication.

--`,,```,,,,````-`-`,,`,,`,`,,`---

Copyright The Institute of Electrical and Electronics Engineers, Inc.
Provided by IHS under license with IEEE
No reproduction or networking permitted without license from IHS Not for Resale

Two principal conditions expose hearing aid equipped users to undesired RF electromagnetic disturbances. The Far-Field condition corresponds to the type of field a hearing aid equipped bystander would experience when adjacent to a WD user. The Near-Field condition corresponds to the more intense fields that a hearing aid equipped user of a WD would experience. This standard assesses the Near-Field or user condition.

This standard describes preferred test methods and test facilities and, in some cases, alternative test methods and facilities. If alternative test methods or facilities are employed, every effort shall be made to establish correlation with the preferred ones. Any deviation from the preferred test methods, as set forth in this standard, shall be fully described in the test report.

Wherever the word *shall* is used in this document, it indicates something mandatory. The word *should* indicates something that is advisory. The word *may* indicates an option,which is at the discretion of the test engineer.

1.3 Organization and use of the document

Deleted: Use

Deleted: Document

These technical requirements define the measurement methods and categorical levels to ensure hearing aid operational compatibility with WDs.

To ensure hearing aid and WD compatibility, it is essential that uniform measurement methods be defined for hearing aid immunity to electric and magnetic fields and WD emission of electric and magnetic fields. In addition, in order to provide for T-Coil mode, the WD T-Coil signal must be evaluated for signal strength, intended/unintended signal ratio and the frequency response of the signal in the audio band.

There are several factors impacting hearing aid performance when used in the presence of a WD. The hearing aid can be exposed to Near-Field illumination (when the hearing aid user uses a WD) or to Far-Field illumination (when the radiating element is at a distance from the hearing aid user). Different styles of hearing aids (BTE, ITE, ITC, and CIC) are positioned differently with respect to the WD. WDs can operate at different frequencies and utilize different transmission schemes.

Hearing aids can operate in an acoustic coupling mode or a T-coil coupling mode. In acoustic mode, hearing aids use a microphone to pick up acoustic sound waves generated by the WD. In T-coil mode, the microphone output is disabled (or attenuated) and a magnetic field signal, generated by the WD becomes the signal source. During T-coil operation the magnetic field generated by the WD is intended to be the primary coupling mechanism to the hearing aid. The WD also can produce unintended magnetic fields (the result of circulating currents). Such magnetic fields produce noise, if detected during T-coil operation, or may introduce interference in hearing aid circuits, even in the acoustic mode.

The WD generates an electromagnetic field as the main communication means with the public telephone network. However, it is possible for this field to interfere with the hearing aid's proper operation. Interference is produced as a result of pickup and demodulation within the hearing aid circuitry. The goal is to control the electric and magnetic field distribution such that levels in direct proximity to the hearing aid (with WD in normal position) are manageable and do not interfere with basic hearing aid functionality.

The technical requirements have been organized into nine general sections. The following is the summary of each section:

1.0 Overview: describes the scope and purpose of the document.

2.0 References: References used in this standard.

3.0 Definitions, Acronyms and Abbreviations: Definitions, acronyms and abbreviations used in this standard.

4.0 Wireless Device, RF Emissions Test: prescribes the measurements of the near electric (E) and magnetic (H) fields generated by pulsed RF WD in the region controlled for use by a hearing aid.

DRAFT
Copyright © 2006 IEEE. All rights reserved.
This is a draft, subject to change until final approval by ANSI and publication.

Copyright The Institute of Electrical and Electronics Engineers, Inc.
Provided by IHS under license with IEEE
No reproduction or networking permitted without license from IHS
Not for Resale

5.0 Hearing Aid RF Near-Field Immunity Test: prescribes the measurement method to be used in determining the immunity level of a hearing aid to radiated electromagnetic fields originating from a WD.

6.0 Wireless Device T-Coil Signal Test: describes the WD T-Coil signal measurement. Two quantities are measured: the desired and undesired magnetic field levels.

7.0 Performance Criterion: provides the criterion required for acceptable interoperability of a hearing aid with a WD. When these criteria are met, as defined by the tests described in this standard, a hearing aid operates acceptably with a WD. The performance criterion for the T-Coil mode is contained in sections 7.3.1 and 7.3.2. This standard provides the set of parameters for the microphone and T-Coil modes of operation.

8.0 Calibration and Measurement Uncertainty: provides guidance for estimating the uncertainty and reproducibility of measurements made in accordance with this standard.

9.0 Test Report: outlines the general requirements of the test report and follows the similar arrangement described in ANSI C63.4, Section 10.

Figure 1-1 depicts the organization and use of this standard. Both the WD and hearing aid have mandatory tests, in Sections 4 - 6. These provide for both microphone and T-Coil modes of operation. The appropriate test is run for each device and a category is determined, using the parameters found in Section 7. The category information is then made available to the end user. Using the category information from both a WD and hearing aid the end user is able to determine the performance to be expected from any particular WD and hearing aid combination. Sections 8-9 provide guidance on calculating the measurement uncertainty and preparation of the test report. The test report is delivered to the relevant authority, requiring the testing.

Using the category system, a user may determine whether a particular WD will be compatibile and generally usable with a particular hearing aid. To do this, the immunity rating of the hearing aid is added to the emissions rating of the WD. A sum of 4 would indicate that the combination of WD and hearing aid is usable; a sum of 5 would indicate that the WD and hearing aid would provide normal use; and a sum of 6 or greater would indicate that the WD and hearing aid would provide excellent performance.

The measurements of WD emissions and hearing aid electromagnetic compatibility (EMC) are performed fairly close to the source of these emissions, where small errors in instrumentation, EM field measurements, and hearing aid position can manifest in large uncertainties in measurement results. Section 8 describes the uncertainties involved in these measurements and instrument calibration procedures to control these.

This standard also contains several annexes with additional information about the measurements, instrumentation, calibration of instruments, and uncertainty of the measurements.

This document is intended to provide a measure of the compatibility between hearing aid devices and WD products. The device categories are based on testing with hearing aid devices in the laboratory and in actual use. However, there is a wide range of human perceptions of normal communications with WD or even wired communications. Thus, even when compatibility between a particular hearing aid and WD is indicated by these tests, it cannot be guaranteed that the vocal output of the WD will be intelligible to all users of the two devices.

DRAFT

Copyright © 2006 IEEE. All rights reserved.

This is a draft, subject to change until final approval by ANSI and publication.

Copyright The Institute of Electrical and Electronics Engineers, Inc.
Provided by IHS under license with IEEE
No reproduction or networking permitted without license from IHS Not for Resale

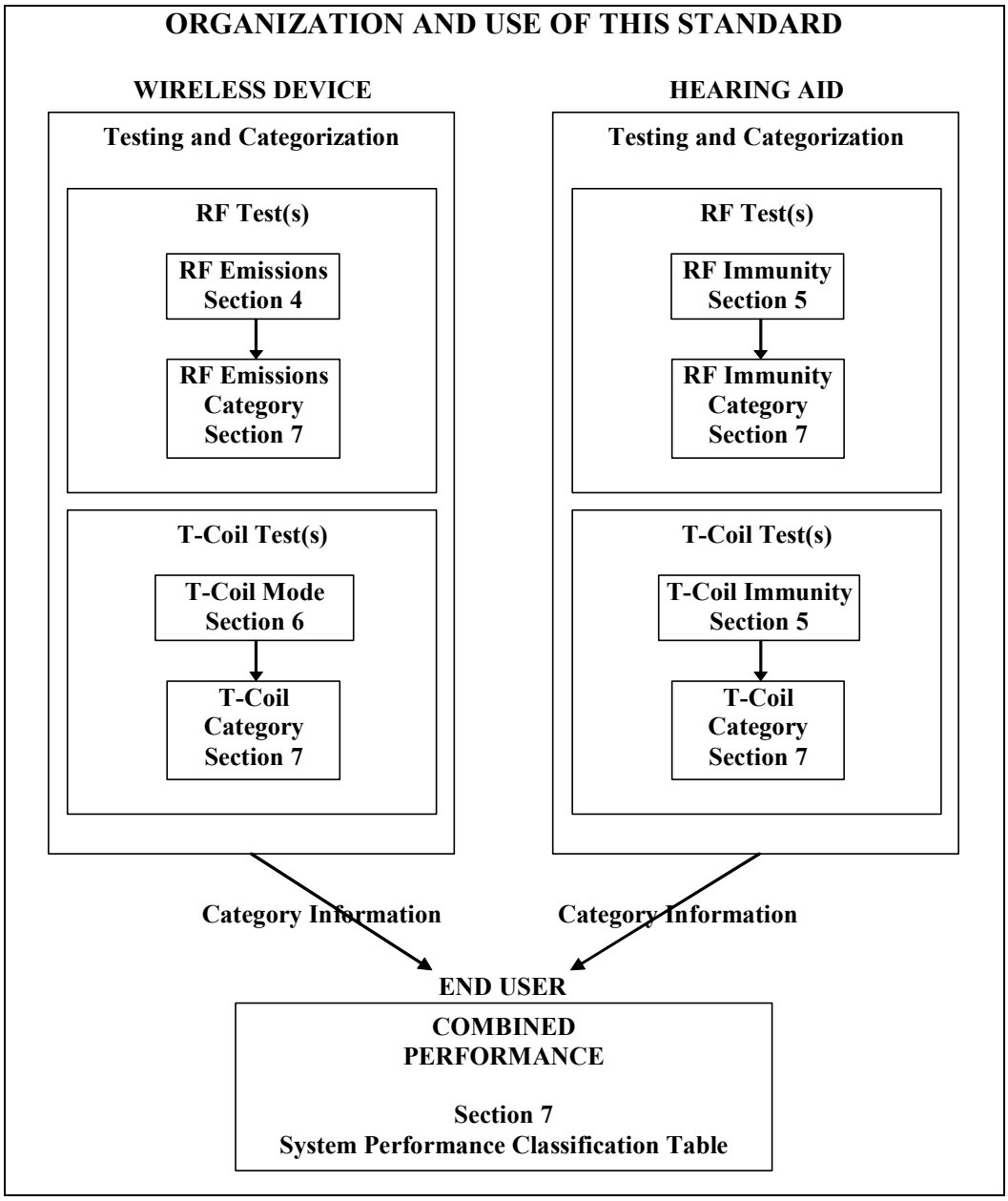

Figure 1-1 – Organization of this standard

DRAFT
Copyright © 2006 IEEE. All rights reserved.
This is a draft, subject to change until final approval by ANSI and publication.

Copyright The Institute of Electrical and Electronics Engineers, Inc.
Provided by IHS under license with IEEE
No reproduction or networking permitted without license from IHS
Not for Resale

2. References

The following references shall form a part of this standard to the extent that they are referenced herein. When any of the references are superseded by a revision, the version specified in this document shall apply.

[1.] ANSI C63.2-1996, American National Standard for Instrumentation--Electromagnetic Noise and Field Strength, 10 kHz to 40 GHz--Specifications.[2]
[2.] ANSI C63.4-2003, American National Standard for Methods of Measurement of Radio-Noise Emissions from Low-Voltage Electrical and Electronic Equipment in the Range of 9 kHz to 40 GHz.
[3.] ANSI C63.5-2004, American National Standard for Electromagnetic Compatibility - Radiated Emission Measurements in Electromagnetic Interference (EMI) Control - Calibration of Antennas (9 kHz to 40 GHz).
[4.] ANSI C63.14-1998, American National Standard Dictionary for Electromagnetic Compatibility (EMC), Electromagnetic Pulse (EMP), and Electrostatic Discharge (ESD) (Dictionary of EMC/EMP/ESD Terms and Definitions).
[5.] ANSI C95.1-1999, IEEE Standard for Safety Levels with Respect to Human Exposure to Radio Frequency Electromagnetic Fields, 3 kHz to 300 GHz.
[6.] ANSI C95.3-1991, IEEE Recommended Practice for the Measurement of Potentially Hazardous Electromagnetic Fields – RF and Microwave (ANSI).
[7.] ANSI S1.4-1983 (R 2005), American National Standard Specification for Sound Level Meters.
[8.] ANSI S3.5-1997, American National Standard, Methods for the Calculation of the Speech Intelligibility Index.
[9.] ANSI S3.7-1995, American National Standard Method for Coupler Calibration of Earphones.
[10.] ANSI S3.22-1996, American National Standard, Specification of Hearing Aid Characteristics.
[11.] ANSI S3.25-1979, American National Standard, Occluded-Ear Simulator.
[12.] Cellular Telecommunications and Internet Association (CTIA) Performance Evaluation Standard for 800 MHz AMPS and Cellular/PCS CDMA Dual Mode Wireless Subscriber Stations, 2003, Revision 3.21.
[13.] CISPR/TR 16-4-1 (2003-11), Specification for radio disturbance and immunity measuring apparatus and methods - Part 4-1: Uncertainties, statistics and limit modeling - Uncertainties in standardized EMC tests.
[14.] CISPR 16-4-2 (2003-11), Specification for radio disturbance and immunity measuring apparatus and methods - Part 4-2: Uncertainties, statistics and limit modeling - Uncertainty in EMC measurements.
[15.] CISPR/TR 16-4-3 (2003-11), Specification for radio disturbance and immunity measuring apparatus and methods - Part 4-3: Uncertainties, statistics and limit modeling - Statistical considerations in the determination of EMC compliance of mass-produced products.
[16.] CISPR/TR 16-4-4 (2003-11), Specification for radio disturbance and immunity measuring apparatus and methods - Part 4-4: Uncertainties, statistics and limit modeling - Statistics of complaints and a model for the calculation of limits.
[17.] EIA RS-504-1983, Magnetic Field Intensity Criteria for Telephone Compatibility with Hearing Aids.[3]
[18.] FCC 47 CFR 2, Frequency Allocations and Radio Treaty Matters; General Rules and Regulations.[4]
[19.] FCC 47 CFR 6 Subpart C, Access To Telecommunications Service, Telecommunications Equipment And Customer Premises Equipment By Persons With Disabilities.
[20.] FCC 47 CFR 15, Radio Frequency Devices.
[21.] FCC 47 CFR 20.19, Hearing Aid-Compatible Mobile Handsets.

---

[2] ANSI publications are available from the Institute of Electrical and Electronic Engineers Service Center, http://standards.ieee.org, 445 Hoes Lane, P.O. Box 1331, Piscataway, NJ 08855-1331 USA, or from the Sales Department, American National Standards Institute, 11 West 42nd St., New York, NY 10036 USA. Alternatively, ANSI may be contacted at http://www.ansi.org.

[3] TIA (www.tiaonline.org), EIA (www.eia.org) have appointed Global Engineering Documents (http:global.ihs.com) as the primary distributor of TIA/EIA/JEDEC standards and related publications. To place an order, or obtain pricing, call Global Engineering Documents:
1-800-854-7179 (U.S. and Canada)
1-303-397-7956 (Outside U.S. and Canada)
Or visit http://global.ihs.com.

[4] For information on how to purchase FCC and NIST publications, contact the Superintendent of Documents, US Government Printing Office, Washington, DC 20402 USA.

DRAFT
Copyright © 2006 IEEE. All rights reserved.
This is a draft, subject to change until final approval by ANSI and publication.

--`,,```,,,,````-`-`,,`,,`,`,,`---

Copyright The Institute of Electrical and Electronics Engineers, Inc.
Provided by IHS under license with IEEE
No reproduction or networking permitted without license from IHS
Not for Resale

[22.] FCC 47 CFR 22, Public Mobile Services.
[23.] FCC 47 CFR 24, Personal Communications Services.
[24.] FCC 47 CFR 68, Connection of Terminal Equipment to the Telephone Network.
[25.] FCC 47 CFR 90, Private Land Mobile Radio Services.
[26.] FCC 47 CFR 90 Subpart S, Specialized Mobile Radio Services.
[27.] IEC 61000-4-3: 2002, Electromagnetic Compatibility for Electrical and Electronic Equipment - Part 4: Testing and Measurement Techniques - Section 3: Radiated, Radio Frequency, Electromagnetic Field Immunity Test.[5]
[28.] IEC 60118-0:1983, Hearing Aids - Part 0: Measurement of Electroacoustical Characteristics.
[29.] IEC 60118-1:1999, Hearing Aids - Part 1: Hearing aids with induction pick-up coil input.
[30.] IEC 60118-4: 1981, Methods of Measurement of Electroacoustical Characteristics of Hearing Aids - Part 4: Magnetic Field Strength in Audio-Frequency Induction Loops for Hearing Aid Purposes.
[31.] IEC 60118-7:1983, Methods of Measurement of Electroacoustical Characteristics of Hearing Aids - Part 7: Measurement of the Performance Characteristics of Hearing Aids for Quality Inspection for Delivery Purposes.
[32.] IEC 60118-13:2004 Ed. 2.0, Electroacoustics - Hearing aids - Part 13: Electromagnetic compatibility (EMC).
[33.] IEC 60126:1973, IEC Reference Coupler for Measurement of Hearing Aids Using Earphones Coupled to the Ear Means of Ear Inserts.
[34.] IEC 61094-1 (1992-06), Measurement microphones - Part 1: Specifications for laboratory standard microphones.
[35.] IEC 61094-2 (1992-03), Measurement microphones - Part 2: Primary method for pressure calibration of laboratory standard microphones by the reciprocity technique.
[36.] IEC 61094-3 (1995-11), Measurement microphones - Part 3: Primary method for Free-Field calibration of laboratory standard microphones by the reciprocity technique.
[37.] IEC 61094-4 (1995-11), Measurement microphones - Part 4: Specifications for working standard microphones.
[38.] IEC 711:1981, Occluded-Ear Simulator for the Measurement of Earphones Coupled to the Ear by Ear Inserts.
[39.] IEC 60318-1 (1998-07), Ed. 1.0, Electroacoustics - Simulators of human head and ear - Part 1: Ear simulator for the calibration of supra-aural earphones
[40.] IEC 60318-2 (1998-08), Ed. 1.0, Electroacoustics - Simulators of human head and ear - Part 2: An interim acoustic coupler for the calibration of audiometric earphones in the extended high-frequency range
[41.] IEC 60318-3 (1998-08), Ed. 1.0, Electroacoustics - Simulators of human head and ear - Part 3: Acoustic coupler for the calibration of supra-aural earphones used in audiometry
[42.] IEEE Std 100-1997, The New IEEE Standard Dictionary of Electrical and Electronics Terms 5th ed.
[43.] IEEE Std 149-1979, IEEE Standard Test Procedures for Antennas.
[44.] IEEE Std 269-2002, IEEE Standard Methods for Measuring Transmission Performance of Analog and Digital Telephone Sets, Handsets, and Headsets
[45.] IEEE Std 299-1991, IEEE Standard for Measuring the Effectiveness of Electromagnetic Shielding Enclosures.
[46.] IEEE Std 661-1979, IEEE Standard Method for Determining Objective Loudness Ratings of Telephone Connections.
[47.] IEEE Std 1027-1996, IEEE Standard Method for Measurement of the Magnetic Field in the Vicinity of a Telephone Receiver.
[48.] IEEE Std 1028-1996, IEEE Recommended Practice for RF Absorber Performance Evaluation in the Range 30 MHz to 5 GHz.
[49.] IEEE Std 1309-2005, IEEE Standard Method for the Calibration of Electromagnetic Field Sensors and Field Probes, Excluding Antennas, from 9 kHz to 40 GHz.
[50.] ISO 3-1973, Preferred Numbers - Series of Preferred Numbers.
[51.] ISO 266-1975, Acoustics - Preferred Frequencies for Measurements.
[52.] ITU-T Recommendation P.79. Calculation of loudness ratings for telephone handsets.
[53.] ITU-T, Blue Book, Volume V, Telephone Transmission Quality Series P Recommendations, Recommendation P.37-1993, Magnetic Field Strength around the Earcap of Telephone Handsets which Provide for Coupling to Hearing Aids.[6]

Deleted: 13:1997

Formatted: Font: (Default) Times New Roman, 10 pt

[5] The IEC may be contacted at http://www.iec.ch.

[6] ITU-T publications are available from the International Telecommunications Union, http://www.itu.int, Place des Nations, CH-1211 Geneva 20 Switzerland. Telephone: +41 22 730-5280, Fax: +41 22 730-5194. ITU

DRAFT
Copyright © 2006 IEEE. All rights reserved.
This is a draft, subject to change until final approval by ANSI and publication.

--`,,```,,,,````-`-`,,`,,`,`,,`---

Copyright The Institute of Electrical and Electronics Engineers, Inc.
Provided by IHS under license with IEEE
No reproduction or networking permitted without license from IHS Not for Resale

[54.] ITU-T, Blue Book, Volume V, Telephone Transmission Quality Series P Recommendations, Recommendation P.50-1993, Artificial Voices.
[55.] NIS 81: Edition 1, The Treatment of Uncertainty in EMC Measurements, May 1994.[7]
[56.] NIS 3003: Edition 8, The Expression of Uncertainty and Confidence in Measurement for Calibrations, May 1995.
[57.] NIST Technical Note 1297, Guidelines for Evaluating and Expressing the Uncertainty of NIST Measurement Results, Sept. 1994.
[58.] SAE J551/1, Performance Levels and Methods of Measurements of Electromagnetic Compatibility of Vehicles, Boats (up to 15 m), and Machines (50 Hz to 18 GHz).[8]
[59.] TIA/EIA/IS-55-A Recommended Minimum Performance Standards for 800 MHz Dual-Mode Mobile Stations (Sept., 1993).[9]
[60.] TIA/EIA/IS-91 Mobile Station - Base Station Compatibility Standard for 800 MHz Analog Cellular (Oct., 1994).
[61.] TIA/EIA/IS-95 Mobile Station-Base Station Compatibility Standard for Dual-Mode Wideband Spread Spectrum Cellular System (July 1993).
[62.] TIA/EIA-136 Series, 800 MHz TDMA Cellular Standards.
[63.] TIA/EIA/IS-2000 Series, CDMA 2000® Series, Release 0 (2000).
[64.] TIA/EIA TSB31-A Part 68 Rationale and Measurement Guidelines (March, 1992).
[65.] UKAS M3003, The Expression of Uncertainty and Confidence in Measurement (Dec 1997).[10]

Publications are also available in the United States from the National Technical Information Service, Department of Commerce, 5285 Port Royal Road, Springfield, Va. Telephone: (703) 487-4650, Fax: (703) 321-8547.

[7] NIS standards are publish by NAMAS (UKAS) and may be ordered from UKAS, National Physical Laboratory, Teddington, Middlesex, TW11 OLW, England; Tel. 011-81-943-7140, FAX 011-81-943-7134.

[8] SAE documents can be order at: http://www.sae.org.

[9] TIA (www.tiaonline.org), EIA (www.eia.org) have appointed Global Engineering Documents (http:global.ihs.com) as the primary distributor of TIA/EIA/JEDEC standards and related publications. To place an order, or obtain pricing, call Global Engineering Documents:

1-800-854-7179 (U.S. and Canada)
1-303-397-7956 (Outside U.S. and Canada)
Or visit http://global.ihs.com.

[10] UKAS documents may be located at: http://www.ukas.com/information_centre/publications.asp.

DRAFT

Copyright © 2006 IEEE. All rights reserved.
This is a draft, subject to change until final approval by ANSI and publication.

Copyright The Institute of Electrical and Electronics Engineers, Inc.
Provided by IHS under license with IEEE
No reproduction or networking permitted without license from IHS Not for Resale

3. Definitions, acronyms and abbreviations

Deleted: Acronyms

Deleted: Abbreviations

3.1 Definitions

The ANSI C63.14-1998 [4] and IEEE Std 100-1997 [30] definitions apply throughout this document, unless otherwise noted below. Particular product standards or applicable regulation definition take precedence. Definition sources (if applicable) are enclosed in brackets following the definition.

Accessibility. The capability of a wireless communications device (WD) used together with a hearing aid device to provide the audibility and intelligibility needed for communication.

Anechoic enclosure. An enclosure whose internal walls have low reflection characteristics. [ANSI C63.14-1998] Note that this implies that all six surfaces of the enclosure have low reflection characteristics for incident waves. For audio use, the anechoic enclosure may not necessarily be a metallic enclosure; for radio frequency applications, the anechoic enclosure is a shielded (against RF ingress or egress) metallic enclosure. Both types of enclosures use absorbing material (suited to the frequency range of use) to implement the low reflection characteristics desired.

Articulation Weighting Factor. A weighting factor that is used to normalize readings of interference from differing sources based upon the acoustic spectral content of the interference. As one example, interference created by a 217 Hz TDMA source degrades hearing intelligibility by approximately 5 dB more than that from a 50 Hz TDMA signal. This is because of the relative impact of the 217 Hz interference signal on the regions of the audio spectrum that are most important to speech recognition.

Audio Coupling Mode. Transmission of a signal between two pieces of equipment using sound.

Audio Frequency. (1) (general). Any frequency corresponding to a normally audible sound wave. Notes: (A) Audio frequencies range roughly from 15 hertz to 20,000 hertz. (B) This term is frequently shortened to audio and used as a modifier to indicate a device or system intended to operate at audio frequencies, for example, audio amplifier. [IEEE Std 100-1997]

Audio Band. The frequency range from 15 hertz to 20,000 hertz. (See Audio Frequency).

Audio Band Magnetic signal - desired (ABM1). Measured quantity of the desired magnetic signal.

Audio Band Magnetic signal - undesired (ABM2). Measured quantity of the undesired magnetic signal, such as interference from battery current and similar non-signal elements.

Audio Band Magnetic (ABM) Articulation Weighting Factor. Audio band magnetic AWF from ABM1 and ABM2

Band. Frequency range between two defined limits. [IEEE Std 100-1997]

Bandwidth. The range of frequencies within which performance, with respect to some characteristic, falls within specific limits. [IEEE Std 100-1997.]

Compatibility. The capability of a wireless communications device (WD) and a hearing aid, used together, to provide the user with the audibility and intelligibility needed for communication. The more specific term T-Coil Compatibility means that the coupling of the WD signal to the hearing aid T-coil meets the requirement set forth in this standard.

dBm0: Power level in dBm, relative to a reference point called the zero transmission level point, or 0 TLP. A signal level of X dBm at the 0 TLP is designated X dBm0. In a codec, the 0 TLP is specified in relationship to the full-scale digital level or saturation. However, digital saturation is generally not 0 dBm0. For m-law codecs 0 dBm0 is 3.17 dB below digital full scale. For A-law codecs 0 dBm0 is 3.14 dB below digital full scale.

DRAFT
Copyright © 2006 IEEE. All rights reserved.
This is a draft, subject to change until final approval by ANSI and publication.

Copyright The Institute of Electrical and Electronics Engineers, Inc.
Provided by IHS under license with IEEE
No reproduction or networking permitted without license from IHS
Not for Resale

Digital Wireless Telephone. Radio frequency based, wireless telephones utilizing digital transmission formats over an air interface.
[NOTE: Generally these are devices regulated under Parts 15, 22 and 24 of the Rules of the Federal Communications Commission. Annex G contains a more detailed discussion of these devices.]

Directional Coupler. A transmission coupling device for separately (ideally) sampling (through a known coupling loss for measuring purposes) either the forward (incident) or the backward (reflected) wave in a transmission line. [IEEE Std 100-1997]

Far-Field Region. That region of the field of an antenna where the angular field distribution is essentially independent of the distance from a specified point in the antenna region. Notes: (A) For a half-wavelength dipole, the reference point is usually taken as the center of the antenna, but may be anywhere on the surface of the antenna. (B) For a half-wavelength dipole, the Far-Field region is considered to exist at distances much greater than $\lambda/2\pi$, where λ is the wavelength. For a half-wavelength dipole, this distance is at the geometric center of the transition region between the Near-Field and Far-Field regions. (C) The distance 3λ is considered to lie in the Far-Field region [IEEE Std 100-1997: (EMC) 377-1980r].

Forward power. That power supplied by the output of an amplifier (or generator) traveling towards a load. [SAE J551/1]

Gigahertz Transferse ElectroMagnetic Chamber (GTEM). See Wideband TEM (WB TEM) cell.

Hearing Aid. A professionally dispensed, wearable, air-conduction, sound amplifying device that is intended to compensate impaired hearing.

Input referenced ambient noise (IRAN). The equivalent acoustic input sound pressure level that would produce the acoustic noise output observed from a hearing aid. IRAN may be obtained by subtracting the acoustic gain in dB from the acoustic noise output.

Input referenced interference level (IRIL). The equivalent acoustic input sound pressure level (typically at 1 kHz) that would produce the same acoustic output in a hearing aid as that produced by a RF interference source. IRIL may be obtained by subtracting the acoustic gain in dB from the acoustic interference output.

Intentional radiator. A device that intentionally generates and emits radio frequency energy by radiation or induction. [FCC 15.3(o)]

Measurement Reference Point. Generally, the center of the earpiece receiver speaker openings. Physical location may be offset from earpiece center, if a secondary induction source is used. Note: wireline phones referenced this as ERP (ear reference point), this conflicts with the use of ERP as effective radiated power.

Near-Field Region. That part of space between the antenna and the Far-Field region [IEEE Std 100-1997: (AP) 145-1993]. Notes: (A) The Near-Field includes the quasi-static and induction fields varying as r^{-3} and r^{-2}, respectively, but does not include the radiation field varying as r^{-1} [IEEE Std 100-1997: (PE/T&D) 1260-1996]. (B) For a half-wavelength dipole, the Near-Field region is considered to exist at distances much less than $\lambda/2\pi$, where λ is the wavelength. (C) For a very short dipole, or equivalent radiator, the outer boundary is commonly taken to exist at a distance of $\lambda/2\pi$ from the antenna surface [IEEE Std 100-1997: (AP) 145-1993].

For the purposes of this standard, the Near-Field is considered to be a distance of no more than 1/5 of a wavelength from the WD at the operating frequency. Therefore, the Near-Field is calculated to be 7.5 cm for 800 MHz, decreasing to 2 cm for 3 GHz.

Net power. Forward power minus reflected power at the same location on a transmission line. [SAE J551/1]

DRAFT
Copyright © 2006 IEEE. All rights reserved.
This is a draft, subject to change until final approval by ANSI and publication.

Copyright The Institute of Electrical and Electronics Engineers, Inc.
Provided by IHS under license with IEEE
No reproduction or networking permitted without license from IHS
Not for Resale

Personal Communications Service Device. Intentional radiators operating in the frequency band specified by the applicable regulating agency that provide a wide array of mobile and ancillary fixed communication services to individuals and businesses. [Modification of FCC 15.303(g)]

Quality factor. The ratio of the resonance frequency to the bandwidth between the frequencies on opposite sides of the resonance frequency (known as half-power points) where the response of the resonant structure differs by 3 decibels from that at resonance. [IEEE Std 100-1998]

Reflected power. That power traveling towards the amplifier (or generator) reflected by a load caused by impedance mismatch between the transmission line and load. [SAE J551/1]

Shielded enclosure. A mesh or sheet metallic housing designed expressly for the purpose of separating electro-magnetically the internal and the external environment. [ANSI C63.14-1998]

Sound Pressure Level (SPL). The sound pressure level, in decibels, of a sound is 20 times the logarithm to the base 10 of the ratio of the pressure of this sound to the reference pressure. [IEEE Std 100-1997]
For this standard the reference level shall be 20 μPascals.

Tele-Coil (T-coil) - An inductive coil used in some hearing aids to allow reception of an audio band magnetic field signal, instead of an acoustic signal. The magnetic or inductive mode of reception is commonly used in conjunction with telephones, auditorium loop systems and other systems that provide the required magnetic field output.

Transverse electromagnetic (TEM) cell. A measuring device that is designed to utilize the transverse electromagnetic (TEM) mode over the frequency range of interest. Common examples are the two port TEM cell (also known as the Crawford Cell) and the wideband TEM cell. [ANSI C63.4]

Wavelength (λ). Of a monochromatic wave, the distance between two points of corresponding phase of two consecutive cycles in the direction of the wave normal. [IEEE Std 100-1997]

Wideband TEM (WB TEM) cell. A TEM cell that has been altered to extend the usable frequency range. Often this is achieved by replacing one port of a two port TEM cell with a wideband load. e.g., One example is commonly called a GTEM. [ANSI C63.4]

Wireless Communications Device (WD). A communications device using Radio Frequency energy. These devices are used in a wireless communications networks such as Cellular or Personal Communication Service.

3.2 Acronyms and abbreviations

Deleted: Abbreviations

ABM	Audio Band Magnetic
ABM1	Audio Band Magnetic signal - desired
ABM2	Audio Band Magnetic signal - undesired
AGC	Automatic Gain Control
AM	Amplitude Modulation
ANSI	American National Standards Institute
AWF	Articulation Weighting Factor
BTE	behind the ear (hearing aid)
CDMA	Code Division Multiple Access
CFR	Code of Federal Regulations
CIC	Completely in the Canal (hearing aid)
CW	Carrier Wave
DAI	Digital Audio Interface
dB	decibel

DRAFT
Copyright © 2006 IEEE. All rights reserved.
This is a draft, subject to change until final approval by ANSI and publication.

--`,,```,,,,````-`-`,,`,,`,`,,`---

Copyright The Institute of Electrical and Electronics Engineers, Inc.
Provided by IHS under license with IEEE
No reproduction or networking permitted without license from IHS
Not for Resale

dB SPL	decibels referenced to a sound pressure level of 20 μPascals
dBm0	Power level in dBm relative to zero transmission level point
DTX	Discontinuous Transmission
EHIMA	European Hearing Instrument Manufacturers Association
EMC	ElectroMagnetic Compatibility
ETSI	European Telecommunications Standards Institute
f	Frequency
GSM	Global System for Mobile
GTEM	Gigahertz Transverse ElectroMagnetic
HFA	High Frequency Average
i.d.	inside diameter
iDEN	Integrated Digital Enhanced Network
IEC	International Electrotechnical Commission
IEEE	Institute of Electrical and Electronics Engineers
IRAN	Input Referenced Ambient Noise
IRIL	Input Referenced Interference Level
ISO	International Organization for Standardization
ITC	in the canal (hearing aid)
ITE	in the ear (hearing aid)
NADC	North American Digital Cellular
o.d.	outside diameter
OSPL	output sound pressure level
P	transmit power or forward power (Watts)
PC	personal computer
PCS	personal communications services
PEP	Peak Envelope Power
Q	quality factor
QAM	quadrature amplitude modulation
RBW	resolution bandwidth
RF	radio frequency
RMS	root mean square
Rx	receiver
SPL	sound pressure level
T-Coil	Tele-Coil
TDMA	Time Division Multiple Access
TEM	transverse electromagnetic
Tx	transmitter
UARFCN	UTRA Absolute Radio Frequency Channel
UKAS	United Kingdom Accreditation Service
UMTS	Universal Mobile Telecommunications System
UTRA	Universal Terrestrial Radio Access
VoIP	Voice over Internet Protocol
VSWR	Voltage Standing Wave Ratio
WB TEM	WideBand Transverse ElectroMagnetic
WCDMA	Wideband Code Division Multiple Access
WD	Wireless Communications Device

DRAFT

Copyright © 2006 IEEE. All rights reserved.

This is a draft, subject to change until final approval by ANSI and publication.

Copyright The Institute of Electrical and Electronics Engineers, Inc.
Provided by IHS under license with IEEE
No reproduction or networking permitted without license from IHS Not for Resale

4. Wireless device, RF emissions test

This section provides guidance on the measurements of the near electric (E) and magnetic (H) fields generated by wireless communications devices (WD) in the region controlled for use by a hearing aid. The next section sets forth the companion measurement, the immunity of the hearing aid. For the purposes of this standard, the term pulsed refers to the use of a non-continuous RF envelope or carrier. Examples of wireless telephone systems of this type are described in Annex G. These systems may be deployed at a variety of RF frequency ranges, but this standard is restricted to the range of 800 MHz to 3 GHz. Additionally, it is generally considered sufficient to measure a particular pulsed RF WD at the frequencies at which the WD is capable of transmission as part of its normal operation, as specified by the manufacturer. However, the evaluation need not be limited to those frequencies.

As is stated in the Scope and Organization and Use sections of this document, the issue of interest is "interference to hearing aids." To that end, the purpose of the measurements in this section is to measure the quantity of the RF signal most closely correlated with the intensity of interference to hearing aids.

The following discussion is given to clearly and succinctly describe the physical quantity to be measured.[11] This quantity, which shall be called "RF interference level" is defined by the characteristics given below. Conceptually, this definition is intended to correlate to the user perception of interference received through an idealized hearing aid and is characterized by the following attributes:

- The full signal bandwidth shall be presented to a wideband detector, meaning that the sensing elements and the detector shall have a bandwidth ≥ the emission bandwidth.
- The RF signal shall be detected by a square law detector.[12]
- The post-detection, recovered audio signal shall be limited to ≥ the audio band.[13]
- The typical response of human hearing is applied to the detected signal before determining the final category.[14]

The test procedure specified in this revision does not yet address all elements of the conceptual model above.

---

[11] In some cases the instrumentation use to measure this quantity can perform a direct measurement. In other cases a compensation, known as a probe modulation factor, must be utilized, to accurately measure the required RF value.

[12] After the square law detector, the signal is the recovered audio interference that would be received by a hearing aid.

[13] The signal that is available after the square law detector is the post-detection signal. It contains the demodulated AM envelope and therefore the recovered audio signal. However, it also contains components that are outside the audio band and therefore, this step calls for the signal to be band limited to the audio band.

There is general agreement that for hearing aid users the upper boundary of the audio band is no higher than the 20 kHz specified in the definition of the audio band. A final determination on the lower boundary band and the frequency weighting within the audio frequency band has not been made. A-weighting has been shown to be a good predictor of human perception for steady-state interference but is not necessarily valid for interference that has substantial variation over time.

[14] The committee is continuing to study a generalized method for characterizing the human perception of interference signals. Human hearing is characterized by several characteristics of the signal, including its spectral and temporal features. A typical characterization might be an RMS reading of the audio signal over a period of 120 mS ±30 mS and taking the highest value during any two-second period to arrive at a final reading in determining the category. The value of 120 mS is selected because it is consistent with the natural integration time of the human ear. The two second interval is selected to be consistent with the "click" relaxation in ANSI C63.4, CISPR 14 and CISPR 16. Generally, variations in volume that occur less frequently than two-seconds do not disrupt word recognition. However, a final determination of these values has not been made in this revision.

Deleted: Device
Deleted: Emissions
Deleted: Test
Deleted: ,
Formatted: Font color: Auto
Deleted:
Deleted: post
Formatted: Font color: Auto
Deleted: steady
Deleted: ‘
Deleted: click’
Deleted:

DRAFT
Copyright © 2006 IEEE. All rights reserved.
This is a draft, subject to change until final approval by ANSI and publication.

--`,,```,,,,````-`-`,,`,,`,`,,`---

Copyright The Institute of Electrical and Electronics Engineers, Inc.
Provided by IHS under license with IEEE
No reproduction or networking permitted without license from IHS
Not for Resale

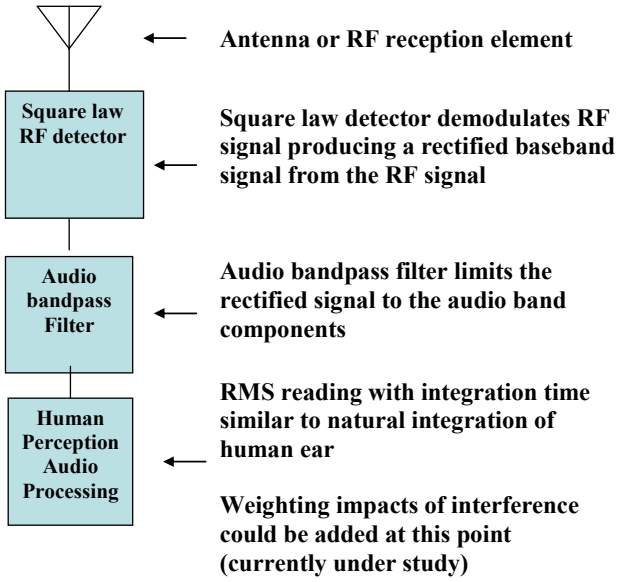

Figure 4-1 – Conceptual model of RF interference level

4.1 Measured RF interference level

Measurement of the "RF interference level" requires adaptations for the test equipment being used. Guidance on the proper measurement of the "RF interference level" is provided in the remainder of this section and other relevant portions of this standard.

Deleted: accommodations t

Deleted: o

The instrumentation specification and test instructions which follow in this section and its related annexes are intended to provide guidance on properly measuring this quantity.

1. The RF signal shall be delivered to a square law detector with a bandwidth ≥ the emission bandwidth.

2. The post-detection signal, after the square law detector, contains the recovered audio interference that would be received by a hearing aid and might be heard by a hearing aid user.

Deleted:

The detected signal shall be measured so as to provide a result equivalent to a probe connected to a spectrum analyzer, using the instrument settings in Table 4-1 - Spectrum analyzer settings for measurement of RF interference level

Formatted: Font: 10 pt

Formatted: Font: 10 pt

3. .

Deleted: [15]

DRAFT
Copyright © 2006 IEEE. All rights reserved.
This is a draft, subject to change until final approval by ANSI and publication.

--`,,```,,,,````-`-`,,`,,`,`,,`---

Copyright The Institute of Electrical and Electronics Engineers, Inc.
Provided by IHS under license with IEEE
No reproduction or networking permitted without license from IHS
Not for Resale

RBW:	≥ emission bandwidth[16]
Video Bandwidth:	≥ 20 kHz[17]
Span:	zero
Center Frequency:	nominal center frequency of channel
Amplitude Scale:	linear (Logarithmic scale may be used if it provides the same result as in linear mode. Care shall be taken if a logarithmic scale is used to assure that it produces the same result as the linear scale.)
Detection:	peak detection[18]
Trigger:	Video or IF trigger, adjusted to give a stable display of the transmission
Sweep rate:	Sufficiently rapid to permit the complete transmit pulse to be resolved accurately. In addition, the sweep time shall be set to display a full transmission cycle, including the on and off time.

Table 4-1 - Spectrum analyzer settings for measurement of RF interference level

4. Convert the reading to field strength by applying the probe calibration factor including probe modulation factor per Annex C.3 to obtain the final RF interference level field strength. If the probe and its associated instrumentation has a response bandwidth of ≥ 20 kHz and is calibrated accordingly, the desired quantity may be measured directly. Otherwise, a probe modulation factor shall be used to determine the final value of the reading.

5. Apply the scan procedures of Section 4.4 to identify the position of maximum field strength.

6. Use the resulting reading at the location of maximum field strength to determine the category per section 7.2.

4.2 Test equipment and facilities

Portions of this standard place requirements on the test facilities, in addition to the general requirements of ANSI C63.4, and are discussed below, as well as in Section C.1, Test Enclosures. Unless stated otherwise, the requirements of ANSI C63.4 apply to the test facilities, including the site design, dimensions, and validation. Additional site validation requirements above 1 GHz are currently under development.

The stability of the measurement equipment, facilities and setup can significantly affect the accuracy of the measurement. Therefore it is important that a careful review be made of the factors affecting measurement uncertainty, as described in Section 8 and Annex E. Efforts made to reduce the measurement uncertainty improve the stability and reproducibility of the measurement.

[16] To measure the emission bandwidth follow the procedure provided in ANSI C63.17 Clause 6.

[17] Spikes shorter than 50 uS do not need to be measured as they fall outside of the audio band. This can be accomplished by setting the video bandwidth to 20 kHz.

[18] The peak transmit power is the maximum of the RMS power during a transmit burst. Typical spectrum analyzers are frequency-selective, peak-responding voltmeters calibrated to display the RMS value of a sine wave. Therefore, using the peak detection function on most spectrum analyzers will produce the intended measurement when the bandwidth and trigger functions are properly set.

Formatted: Keep with next

Deleted: The sweep shall be long enough to show a complete transmission. The sweep time may be set to allow a full transmission cycle, displaying the on and off time.

Formatted: Font: 10 pt

Formatted: Font: 10 pt

Deleted: Figure 4-2 – Spectrum analyzer settings for measurement of RF interference level¶

Deleted: ,

Deleted: o

Deleted: Equipment

Deleted: Facilities

DRAFT
Copyright © 2006 IEEE. All rights reserved.
This is a draft, subject to change until final approval by ANSI and publication.

Copyright The Institute of Electrical and Electronics Engineers, Inc.
Provided by IHS under license with IEEE
No reproduction or networking permitted without license from IHS
Not for Resale

4.2.1 Test equipment

Deleted: Equipment

This section provides a list of the test equipment required to perform this test. The test equipment used shall meet the applicable specifications of Annex D.

1. E-Field, Near-Field Probe
2. H-Field, Near-Field Probe
3. Probe Positioning System
4. WD Support
5. Reference dipole antenna as described in Section 4.3.2 and D.5
6. RF Enclosure, if applicable

4.2.2 Near-field measurement system

Deleted: Field
Deleted: Measurement
Deleted: System

The Near-Field measurement system shall consist of a small, with respect to a wavelength, electric field probe and a magnetic field probe, suitable for measuring the field strength of the RF fields. Typically such probes are constructed of low dielectric plastics and utilize high resistance conductors to deliver the measurement information from the active element to the measurement equipment.

ANSI C95.3-1991 advises that to avoid certain measurement errors, a probe should not be used closer than a distance equal to 3 times the length of the active elements of the probe. The probes shall meet the requirements given in Section D.10 for the E-Field and D.11 for the H-Field probes.

The use of an automated movement system, such as robotic arms or three-axis positioners, is preferred, as it can provide superior probe placement accuracy and placement repeatability. However, each system used shall be verified as having the required placement accuracy and repeatability. Alternatively, manual placement systems may be used. It is recommended that a placement fixture be used with manual systems to assist in accurate probe placement. Such a fixture should be constructed of expanded foam or other RF-transparent materials.

A non-isotropic probe may be used, such as a probe with a single loop for H-Field or a probe with a coaxial cable to allow both frequency and amplitude measurements. For single-axis probes, the initial scan shall be done in all three axes. In these cases the orientation of the probe and routing of the cabling shall be recorded in the test report.

The probe shall be held in such a way as to not significantly influence the readings. For manual measurements, the use of an extension handle, made of low dielectric material, allows the body of the operator to remain sufficiently distant from the test area. In addition, such a probe handle can also serve to assist in maintaining the required 10 mm separation distance from the nearest point on the probe element to the reference plane for the WD under test.

4.2.2.1 Probe modulation factor

Deleted: Modulation
Deleted: Factor

In consideration of the measurement probes' responses to the RF power envelope employed by the WD, for probes and instruments with a response bandwidth of < 20 kHz a probe modulation conversion factor must be applied to the E- and H-field probe readings, in order to accurately determine the "RF interference level".[19] The procedure to determine RF modulation response is provided in Section C.3.1.

4.3 Test setup and validation

Deleted: Setup
Deleted: Validation

This section provides procedures to prepare for testing, including: supporting the device, reducing reflections, validating the measurement system, and configuring the wireless device (WD).

4.3.1 Device support and check for reflections

Deleted: Support
Deleted: Check
Deleted: Reflections

The WD shall be supported in such a way that there are no significant RF reflecting objects within a distance of at least 2 wavelengths at the frequency of measurement, or at a distance such that the total reflections from these objects is kept at least 20 dB below the desired direct signal. The purpose of a 2 wavelength distance to the nearest significant RF reflective object is to maintain at least a 20 dB reflection loss due to these objects. If it is not

[19] Probes that have a response of ≥ 20 kHz to variations in the RF envelope do not require the probe modulation factor.

DRAFT
Copyright © 2006 IEEE. All rights reserved.
This is a draft, subject to change until final approval by ANSI and publication.

--`,,```,,,,````-`-`,,`,,`,`,,`---

Copyright The Institute of Electrical and Electronics Engineers, Inc.
Provided by IHS under license with IEEE
No reproduction or networking permitted without license from IHS
Not for Resale

practical to measure the reflection loss, then the 2 wavelength spacing rule may be used. Support structures such as expanded foam and very low dielectric constant plastics may be used for supporting the WD. The region of the WD that is to be in close proximity to a hearing aid during normal operating conditions shall be available for access by the measurement system.

To check for reflections or other influence from nearby objects move the WD ¼ wavelength relative to the structure, repositioning the measurement probe, so as to keep the same relative spacing between the WD and measurement probe. Rescan the WD and compare the results. The WD may also be reoriented by 45° or 90° and rescanned.

The RF ambient and noise floor shall be >20 dB below the intended measurement limit. If the RF ambient is within 20 dB of the intended measurement limit, the WD and measurement probe shall be contained within an RF test enclosure conforming to Section C.1.1.

4.3.2 Setup validation

The test setup should be validated when first configured and verified periodically thereafter to ensure proper function. The procedure provided in this section is a validation procedure using dipole antennas for which the field levels were computed by numeric modeling. Alternate procedures may be used if fully justified.

4.3.2.1 Validation procedures using dipoles

This section provides guidance on a validation procedure using dipole antennas. Separate but equivalent procedures are provided for both regular dipoles and planar dipoles.

A simulation of dipole free-space E- and H-fields should be made, if possible, to obtain theoretical calculated values for the validation measurements. Compare the measured readings to the simulated values for the reference dipole. Target values derived from numeric modeling for dipoles constructed to the specifications in Section D.5.1.3 and following are provided in Table 4-2. Note that these dipoles have different specifications from those used in Clause 5.

Probe measurements are generally recorded as RMS and, when required, the results are converted to desired quantity per C.3.1.

The validation described in subsequent sections should be performed according to the following:

- Average Input Power P = 100 mW RMS (20 dBm RMS) after adjustment for return loss.
- A dipole as described in Sections D.5 should be used.
- The test fixture should meet the two wavelength separation criterion, per Section 4.3.1.
- The probe-to-dipole separation, which is measured from top surface of the dipole to the nearest point on the probe sensor element, should be 10 mm, as shown in Figures C-3 and C-4.

See Section E.1 for measurement uncertainty values for E and H-Field.

Dipole (See Annex D)	Base band frequencies (MHz)	Frequency (MHz)	E-field calculated values (V/m)	E-field measured values (V/m)	E-field delta (calculated to measured) (V/m) & %	H-field calculated values (A/m)	H-field measured values (A/m)	H- Field Delta (Calculated to Measured A/m & %)
D.5.1 Thick	790-850	835	187			0.476		
D.5.1 Thick	806-821	813.5	190			0.481		

Deleted: Validation
Deleted: FDTD
Deleted: Procedures
Deleted: Dipoles
Deleted: FDTD
Deleted: reported
Deleted: Section
Deleted: field
Deleted: field
Deleted: Peak
Deleted: Peak
Deleted: Peak
Deleted: Peak
Deleted: 265
Deleted: 0.673
Deleted: 268
Deleted: 0.680

DRAFT
Copyright © 2006 IEEE. All rights reserved.
This is a draft, subject to change until final approval by ANSI and publication.

Copyright The Institute of Electrical and Electronics Engineers, Inc.
Provided by IHS under license with IEEE
No reproduction or networking permitted without license from IHS
Not for Resale

D.5.1 Thick	896-901	898.5	185			0.477		
D.5.1 Thick	1880-2000	1880	149			0.456		
D.5.2 Planar		813.5	224.6-236.4			0.5139-0.5226		
D.5.2 Planar		835	214.9-232.2			0.4954-0.5164		
D.5.2 Planar		898.5	213.2-220.9			0.5032-0.5005		
D.5.2 Planar		1880	153.6-149.3			0.4478-0.4035		

Deleted: 262

Deleted: 0.675

Deleted: 211

Deleted: 0.645

Deleted: 4-1

Table 4-2 - Illustrative dipole calculated and measured values[20]

NOTE 1: Numeric modeling results will vary based on several factors, including the size of the computational area, boundary conditions selected, grid resolution, accuracy of models for material properties and other factors. Further, the results obtained by numeric modeling will vary from measured results based on many additional factors, including the degree to while the probe perturbs the field, the degree to which the probe averages the field strength over its dimensions, the linearity of the probe, the differences between the physical dipole and its modeled representation and many other factors. Numeric computations provided to the committee showed significant variability between different results. Accordingly the values provided in Table 4-2 should be used judiciously and not interpreted to be absolutely correct. The calculated values provided in Table 4-2 for dipoles were developed using theoretical numerical computation.

Deleted: analysis from FDTD

NOTE 2: Delta % = 100 X (Measured Peak minus Calculated) divided by Calculated. Values within ±25% are acceptable, of which 12% is deviation and 13% is measurement uncertainty. Values independently validated for the dipole actually used in the measurements should be used, when available.

RF power shall be recorded using both an average reading meter and a peak reading meter per the setup illustrated in Figure C-1 and C-3. Readings of the probe shall be provided by the calibrated near-field probe measurement system.

To assure proper operation of the near-field measurement probe, the input power to the dipole shall be commensurate with the full rated output power of the wireless device (e.g. for a cellular phone wireless device, the average peak antenna input power will be on the order of 100 mW (i.e. -20dBm) RMS after adjustment for any mismatch, but peak output power may be as high as 32 dBm.

4.3.2.1.1 Validation procedure

Deleted: Procedure

Place a dipole antenna meeting the requirements given in Section D.5 in the position normally occupied by the WD. The dipole antenna serves as a known source for an electrical and magnetic output. Position the E-field and H-field probes so that:

- the probes and their cables are parallel to the coaxial feed of the dipole antenna
- the probe cables and the coaxial feed of the dipole antenna approach the measurement area from opposite directions; and
- the probes are 10 mm from the surface of the dipole elements.

Scan the length of the dipole with both E-field and H-field probes and record the maximum values for each. Compare the readings to expected values.

[20] The peak field mentioned in this table is sinusoidal peak. The values cannot be directly compared to the "desired quantity".

DRAFT
Copyright © 2006 IEEE. All rights reserved.
This is a draft, subject to change until final approval by ANSI and publication.

Copyright The Institute of Electrical and Electronics Engineers, Inc.
Provided by IHS under license with IEEE
No reproduction or networking permitted without license from IHS
Not for Resale

4.3.2.1.2 Test cases

Three test cases are recommended. The real or emulated WD transmission signal, an unmodulated (CW) and an 80% AM RF signal shall be used for each relevant frequency band. Each of the cases below shall be measured with both an E- and H-field probe.

4.3.2.1.2.1 Measurement of real or emulated signal

Set a WD or emulated signal source to apply full rated power into the reference dipole. For TDMA protocols set the probe measurement system averaging interval duration to be an integer multiple of the TDMA frame duration.

Measure both the peak and average input power applied to the antenna and record these values.

Using the near-field measurement system, scan the antenna over the appropriately sized area and record the greatest average power reading observed. Field strength measurements shall be made only when the probe is stationary.

Note: The uncertainty for the WD signal step in Section 4.3.2.1.2.1 is greater than when using AM or CW, as in Section 4.3.2.1.2.2

4.3.2.1.2.2 Measurement of CW and AM modulated signals

Set the RF signal generator set for CW or 80% AM. Set its output power so the peak power applied to the antenna is equal to that recorded for the real or emulated signal using the WD modulation format.

Measure both the peak and average input power applied to the antenna and record these values. Calculate the peak to average power ratio (PAR). The PAR for the CW signal should be 0.0 dB from each other and the target values for the dipole being used. The PAR for the AM signal with 80% modulation depth should be 5.10 dB from each other and the peak should be that amount above the target values.

The input signal peak power and peak to carrier ratios applied to the antenna should be confirmed. The values should be measured and recorded, and the ratio calculated.[21]

Using the near-field measurement system, scan the antenna over the appropriately sized area and record the greatest average power reading observed. Field strength measurements shall be made only when the probe is stationary.

4.3.2.1.3 Procedure using regular dipoles

The probe is positioned over the illuminated dipole at 10 mm distance from the nearest point on the probe sensor element to the top surface (edge) of the dipole element as shown in Section C.4.3.

4.3.2.1.4 Procedure using planar dipoles

Position the reference dipole in a suitable holder that enables meeting the RF ambient conditions prescribed in Section 4.3.1. The near field measurement probe is positioned and scanned over the illuminated dipole at a distance of 10 mm from the nearest point on the probe sensor element to the top surface (edge) of the etched dipole (not the edge of the PC board) as shown in Figure 4-2 and Figure 4-3. A gauge block, as depicted in Section A.2.1, simplifies the alignment of the probe to the dipole. Note that a separate E-field and H-field gauge block will be needed if the edges of the probe sensors are at different distances from the tip of the probe. The scan area for 813 to 899 MHz is 20 mm by 180 mm and at 1880 MHz it is 20 mm by 90 mm. Figure C-3 illustrates the instrumentation setup.

[21] The ratio of the peak with 80% AM applied to unmodulated CW is different from the peak to carrier power with 80% AM applied. The ratio of the peak with 80% AM applied to unmodulated CW is 5.1 dB. However, the ratio of the peak to carrier for an 80% AM signal is 3.9 dB. Information on ratio characteristics is given in Annex I.

Deleted: Cases

Deleted: Real

Deleted: Emulated

Deleted: Signal

Deleted: Modulated

Deleted: Signals

Deleted: Regular

Deleted: Dipoles

Deleted: Planar

Deleted: Dipoles

Formatted: Font: (Default) Times New Roman, 10 pt

Formatted: Font: (Default) Times New Roman, 10 pt

DRAFT
Copyright © 2006 IEEE. All rights reserved.
This is a draft, subject to change until final approval by ANSI and publication.

--`,,```,,,,````-`-`,,`,,`,`,,`---

Copyright The Institute of Electrical and Electronics Engineers, Inc.
Provided by IHS under license with IEEE
No reproduction or networking permitted without license from IHS
Not for Resale

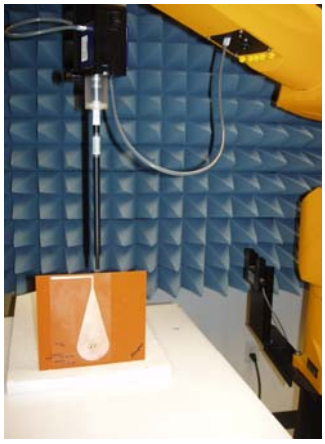

Figure 4-2 – Planar dipole setup

Deleted: Dipole
Deleted: Setup

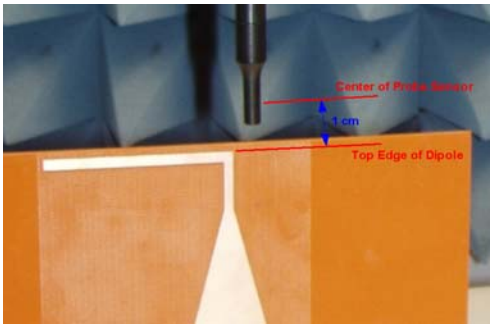

Figure 4-3 – Probe distance from planar dipole

Deleted: Distance
Deleted: Planar
Deleted: Dipole
Deleted: Setup
Deleted: Use

4.3.3 WD setup and use

The WD shall be operated at its maximum RF output power setting, and at the normal operating temperature and voltage, as specified by the manufacturer. To assure WD operation at maximum RF output power automatic power control shall be disabled. Since the presence of wires or conductors in the close vicinity of the WD will disturb the RF fields, the WD should also be operated solely under its own power source, with no external connections unless specifically required so by the manufacturer for normal operation. It is assumed that the user of a WD will operate the device in a manner that is consistent with the recommendations of the manufacturer with regards to maximum efficiency of the WD. Some WDs have more than one antenna position, for example stowed and deployed. In such cases, it is only necessary to test the WD in the condition of maximum antenna efficiency, as defined by the manufacturer. This is considered to be the recommended or specified operation by the manufacturer for the WD. If the fields were found to be higher at another antenna position, the results would be of little concern as the user of the WD would simply have to move the antenna to the more efficient position to reduce the field strength at the hearing aid. However, in cases where the advertised category can only be achieved in certain user controllable configurations it is very important that the consumer be properly informed. Therefore, when the category advertised can only be achieved in certain antenna position(s) or other user configuration instructions are required, these conditions shall be reported with the assigned category in the user documentation, label or other locations where the category information is communicated to the user.

DRAFT
Copyright © 2006 IEEE. All rights reserved.
This is a draft, subject to change until final approval by ANSI and publication.

Copyright The Institute of Electrical and Electronics Engineers, Inc.
Provided by IHS under license with IEEE
No reproduction or networking permitted without license from IHS
Not for Resale

4.4 Near-field test procedure

Deleted: Field
Deleted: Test
Deleted: Procedure

In actual use, the wearer of a hearing aid would place the WD in a position that gives the best acoustic coupling from the WD to the hearing aid. In other words, the WD would be located so that the user could hear the WD desired acoustic or T-Coil output the best. This would be with the output transducer (receiver or T-Coil signal source) of the WD in close proximity to the microphone or T-Coil receiver of the hearing aid. For the purposes of this standard the measurements are made in these areas of the WD. In order to best estimate this usage condition as well as provide a repeatable test procedure a measurement grid in the vicinity of the audio output (receiver or T-Coil signal source) as been defined.

A measurement grid is defined over which the electric and magnetic RF field strength will be measured. The grid is a 5 cm by 5 cm area that is divided into 9 evenly-sized blocks or sub-grids. The grid is centered on the audio frequency output transducer of the WD (speaker or T-coil). The grid is located by reference to a reference plane. This reference plane is the planar area that contains the highest point in the area of the WD that normally rests against the user's ear. A measurement plane is located parallel to the reference plane and 10 mm from it, out from the phone. The grid is located in the measurement plane.

The electric field probe, and separately the magnetic field probe, are to be used to measure the highest field strength in the 5 cm by 5 cm reference plane.

If the assessment T-Coil location is in a different location from the acoustic output, then two different 5 cm by 5 cm areas are to be scanned, the first for the microphone mode assessment and the second for the T-Coil assessment. The location of the microphone mode 5 cm by 5 cm area is centered on the acoustic output of the WD and is defined in Section A.2 and depicted in Figure A-2. The location of the grid for the T-Coil assessment is identical in shape but is centered on the T-Coil axial measurement location, as defined in Section A.3 and depicted in Figure A-3.

The 5 cm by 5 cm area is divided into 9 sub-grids (See the diagram in Figure A-2). Three contiguous sub-grids may be excluded from the measurement. The reason for allowing 3 contiguous sub-grids to be excluded is that extreme "hot spots" are often encountered at the base of the antenna. These high field areas are very localized and easily avoided by the user. Therefore, an exclusion area is allowed so as to not make the requirements needlessly harsh. This allows for RF "hot spots" that can easily be avoided in actual use[22]. However, it is required that 4 sub-grids be common to the E-field and H-field scans for a given grid. The highest reading defined by the sub-grid in the center, containing the acoustic output, and the 5 remaining sub-grids, with 4 of these 6 sub-grids being common between the E-field and H-field scans, determines the category rating. The field probe is carefully moved through the measurement area and the highest reading is located. In order to accurately scan the entire 5 cm by 5 cm area, the center of the probe shall be moved through this area. Accordingly the total area covered by the outside edge of the probe shall be the 5 cm by 5 cm area, increased by half (½) the probe diameter on all sides.

The distance from the WD reference plane to the nearest point on the probe element shall be 1.0 cm. The WD reference plane is a plane parallel with the front "face" of the WD and containing the highest point on its contour in the area of the phone that normally rests against the user's ear. The probe element is that portion of the probe that is designed to receive and sense the field being measured. The physical body of the probe housing shall not be used when setting this 1.0 cm distance as this would place the sensing elements at an indeterminate distance from the reference plane. See Figure A-2.

In the case of a field probe that may have less than three orthogonal elements, it is necessary to rotate the probe to obtain the measurement. Two methods may be used. In the preferred method, the probe shall be rotated in three dimensions for maximum alignment and the reading at maximum field alignment used. An alternative method is to

[22] The presence of RF "hot spots", typically at the base of the WD antenna, presented a particular problem for the committee. At these locations extreme field amplitudes are found but these extremes fall off very quickly, often being a fraction of the peak value in less than a cm. In addition, it is unclear that these areas transfer proportionate power in reality, due to their responsiveness to loading effects. In practical use a user can shift the WD slightly and find a location of good acoustic output while avoiding such RF "hot spots". Representatives of consumers, WD and hearing aid manufacturers discussed this issue at length in the committee and concluded that allowing for a RF "hot spot" exclusion was important in finding a solution which met the requirements of users and was realistically achievable by all parties.

DRAFT
Copyright © 2006 IEEE. All rights reserved.
This is a draft, subject to change until final approval by ANSI and publication.

Copyright The Institute of Electrical and Electronics Engineers, Inc.
Provided by IHS under license with IEEE
No reproduction or networking permitted without license from IHS
Not for Resale

rotate the probe about its geometric center so as to obtain measurements in all three mutually orthogonal orientations. The geometric center is the point that is physically located at the center of electromagnetic sensing element of the probe. This may be determined from physical measurements, or from field pattern measurements during calibration. The maximum field shall be the vector sum of all three individual mutually orthogonal measurements. Note that even when using three element probes the probe may be rotated so as to align one element for maximum field coupling. When this is done the reading of the single, maximally aligned element is used as the field reading at that location. Readings taken in this manner are preferred over those taken with the non-aligned method because of the greater accuracy. However, when the alignment method is used, the probe shall be realigned at every measurement point.

In summary, the scan shall adhere to the following requirements:

- The center of the probe shall scan the to the edges of the grid. Accordingly the total area covered by the outside edge of the probe shall be the 5 cm by 5 cm area, increased by half (½) the probe diameter on all sides.
- The nearest point on the probe measurement element(s) shall be held 1.0 cm from the WD reference plane. The probe element is that portion of the probe that is designed to receive and sense the field being measured. The physical body of the probe housing shall not be used when setting this 1.0 cm distance as this would place the sensing elements at an indeterminate distance from the reference plane.
- The step size of the scan shall be determined by the target measurement uncertainty. Scanning increments of 5 mm or less (see Subclause E.2.3) in most cases should meet the uncertainty recommendations. (See Subclause E.2.3 and Figure E-1 for specific guidance on step size selection.)
- Up to three blocks can be excluded for each field measurement.
    - The center block containing the WD output may not be excluded.
    - A maximum of five blocks can be excluded for both E- and H-field measurements for the WD output being measured. Stated differently, the center sub-grid or block and 3 other blocks must be common to both the E- and H-field measurements for a given grid.

4.4.1 Detailed near-field test procedure

4.4.1.1 Pre-test procedure

The steps listed here shall be performed before the WD Near-Field emissions test is performed. However, these steps need not be performed before every test. They shall be performed periodically, consistent with good laboratory practice and as required, for example before testing types of WDs not assessed previously at a laboratory.

Deleted: Near
Deleted: Field
Deleted: Test
Deleted: Procedure
Deleted: Test
Deleted: Procedure

DRAFT
Copyright © 2006 IEEE. All rights reserved.
This is a draft, subject to change until final approval by ANSI and publication.

Copyright The Institute of Electrical and Electronics Engineers, Inc.
Provided by IHS under license with IEEE
No reproduction or networking permitted without license from IHS
Not for Resale

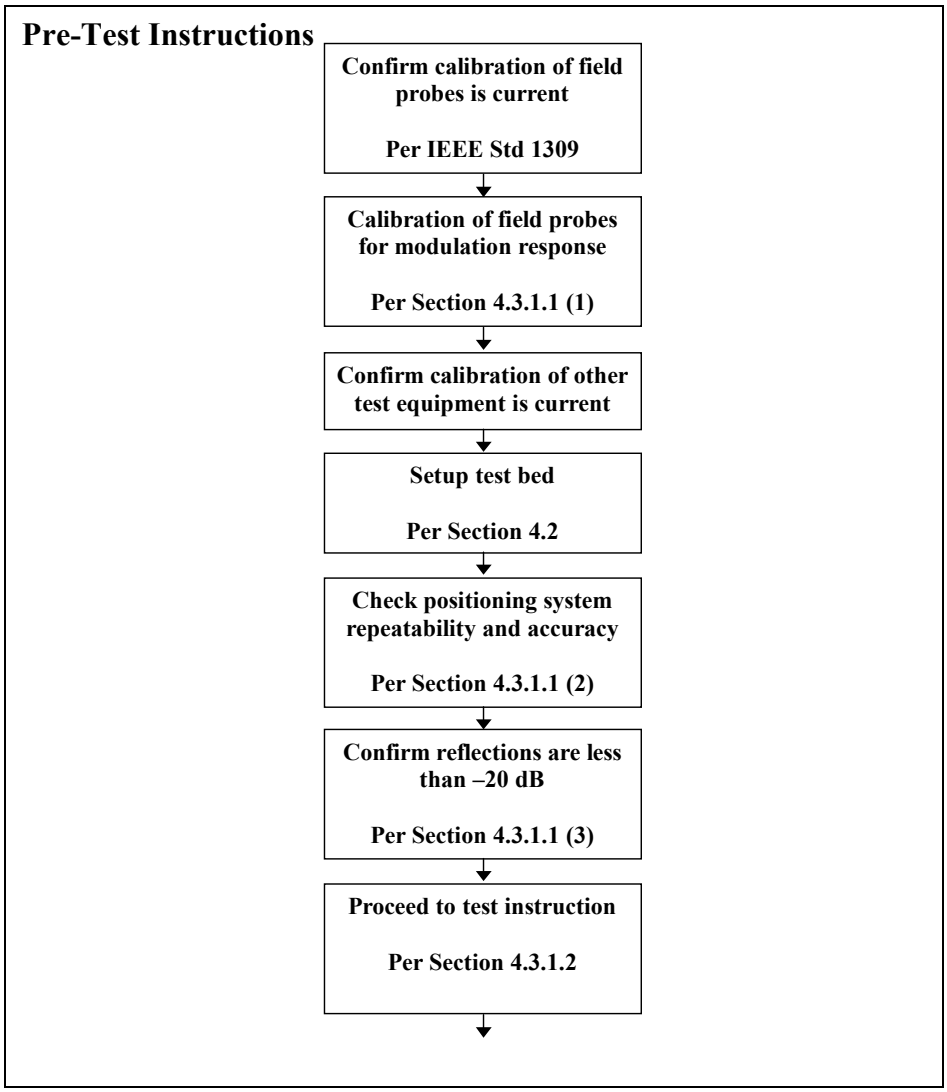

Figure 4-4 - WD near-field emissions pre-test flowchart

1. Calibrate E & H field probes for proper reading of the modulation used by the intended WD (See Annex C).

2. Check for probe positioning system repeatability and accuracy.

3. Confirm interference of reflective objects is less than -20 dB of the intended signal. This may be done by performing the same measurements on the same WD using multiple WD positions and orientations. The readings shall not differ, due to reflections, by more than ±0.8 dB. [23]

[23] A common practice is to move the EUT ¼ wavelength relative to the structure, repositioning the measurement probe, so as to keep the same relative spacing between the EUT and measurement probe. Changing the relative

DRAFT
Copyright © 2006 IEEE. All rights reserved.
This is a draft, subject to change until final approval by ANSI and publication.

Copyright The Institute of Electrical and Electronics Engineers, Inc.
Provided by IHS under license with IEEE
No reproduction or networking permitted without license from IHS
Not for Resale

4.4.1.2 Test procedure

Deleted: Procedure

The following are sample step-by-step test procedures. Other comparable procedures may be used. Both a manual and automatic test procedure are provided. The automated test procedure is preferred.

4.4.1.2.1 Manual scanning method

Deleted: Scanning

Deleted: Method

When performing the test manually, a test fixture shall be used, to improve positioning accuracy. Such a fixture shall be constructed from low dielectric materials, such as foam plastic, which do not significantly affect the readings being taken. An example of such a test fixture is shown in Figure 4-6. In this fixture, permissible exclusion blocks are used to isolate the 6 sub-grids used for the evaluation. The permissible exclusion block is shaped in such a way as to close off three of the sub-grid areas. Thus the 6 areas to be used to determine the WD's maximum emissions are identified and outlined for the final manual scan. The 4 of the 6 areas shall be used in both the E-Field and H-Field measurements.

---

orientation of the probe and EUT to the structure can also be a helpful test. If the readings change significantly then reflections from nearby structures may be indicated.

DRAFT
Copyright © 2006 IEEE. All rights reserved.
This is a draft, subject to change until final approval by ANSI and publication.

Copyright The Institute of Electrical and Electronics Engineers, Inc.
Provided by IHS under license with IEEE
No reproduction or networking permitted without license from IHS
Not for Resale

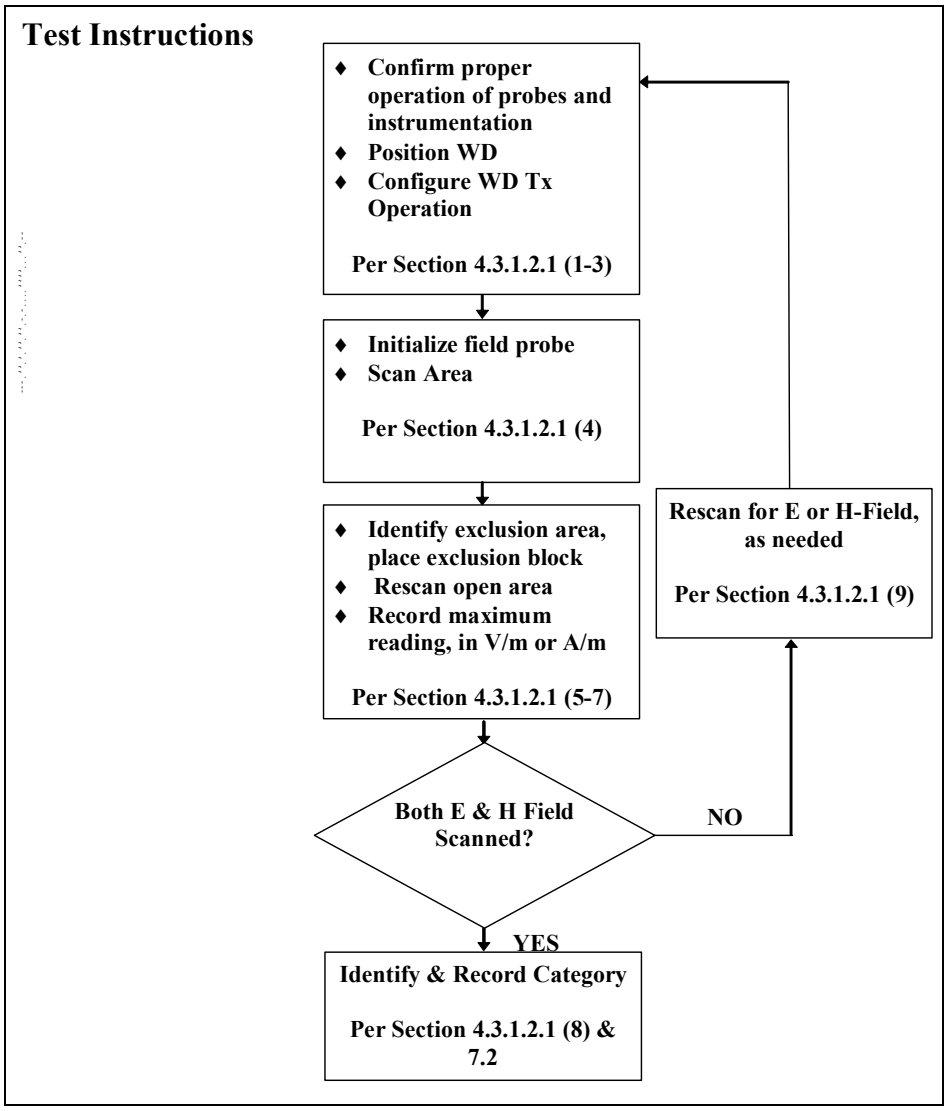

Figure 4-5 - WD near-field emission manual test flowchart

1. Confirm proper operation of the field probe, probe measurement system and other instrumentation.

2. Position the WD in its intended test position. The gauge block, depicted in Section A.2.1, can simplify this positioning. Note that a separate E-field and H-field gauge block will be needed if the edge of the probe sensors are at different distances from the tip of the probe.

3. Configure the WD operation for maximum rated RF output power, at the desired channel and other operating parameters, as intended for the test.

DRAFT
Copyright © 2006 IEEE. All rights reserved.
This is a draft, subject to change until final approval by ANSI and publication.

Copyright The Institute of Electrical and Electronics Engineers, Inc.
Provided by IHS under license with IEEE
No reproduction or networking permitted without license from IHS Not for Resale

4. Perform an initial scan of the 5 x 5 cm area.

   The physical opening in the test fixture shall be wider than the 5 x 5 cm area by half the diameter of the probe. Thus the opening is such that the center of the probe scans the full 5 x 5 cm area.

5. Identify the five contiguous sub-grids around the center sub-grid with the lowest field readings. The center sub-grid shall contain the center of the acoustic output or the T-Coil output, as appropriate. Place the exclusion block into the fixture in the 3 contiguous sub-grids containing the highest field readings. Thus the 6 areas to be used to determine the WD's maximum emissions are identified and outlined for the final manual scan. Please note that a maximum of five blocks can be excluded for both E- and H-field measurements for the WD output being measured. Stated another way, the center sub-grid and three others must be common to both the E- and H-field measurements.

6. Rescan the remaining six sub-grid areas. Identify the maximum field reading within the six sub-grid area identified in step 5. Care shall be taken to identify the highest emission within the six sub-grid area.[24]

Deleted: highest

7. Convert the highest field reading taken in Step 6 to V/m or A/m, as appropriate. For probes that require the use of a probe modulation factor, this conversion shall be done using the appropriate probe modulation factor described in Section 4.2.2.1 and the calibration specified in Section C.3.1.

Deleted:

Deleted: which

8. Compare this reading to the categories in Section 7 and record the resulting category.

9. Repeat steps 1-8 for both the E- and H-field. The lowest category, per the tables in Section 7.2, obtained in step 8 for either E or H-Field determines the M category. Record the WD category rating.

10. Repeat steps 1-9 for the T-Coil mode assessment. The grid shall be shifted so that it is centered on the axial measurement point. Both the E- and H-field are measured for this grid. The category, per the tables in Section 7.2, obtained in step 8 for either E- or H-field determines the T category for the T-Coil mode assessment. Record the WD category rating.

[24] Probe anisotropy may add significantly to the measurement uncertainty. This factor may be minimized by first moving the probe to the location of maximum measurement and then rotating the probe to align it for the maximum reading at that position. This rotation is recommended in order to minimize uncertainty due to anisotropy in the probe.

DRAFT
Copyright © 2006 IEEE. All rights reserved.
This is a draft, subject to change until final approval by ANSI and publication.

--`,,```,,,,````-`-`,,`,,`,`,,`---

Copyright The Institute of Electrical and Electronics Engineers, Inc.
Provided by IHS under license with IEEE
No reproduction or networking permitted without license from IHS
Not for Resale

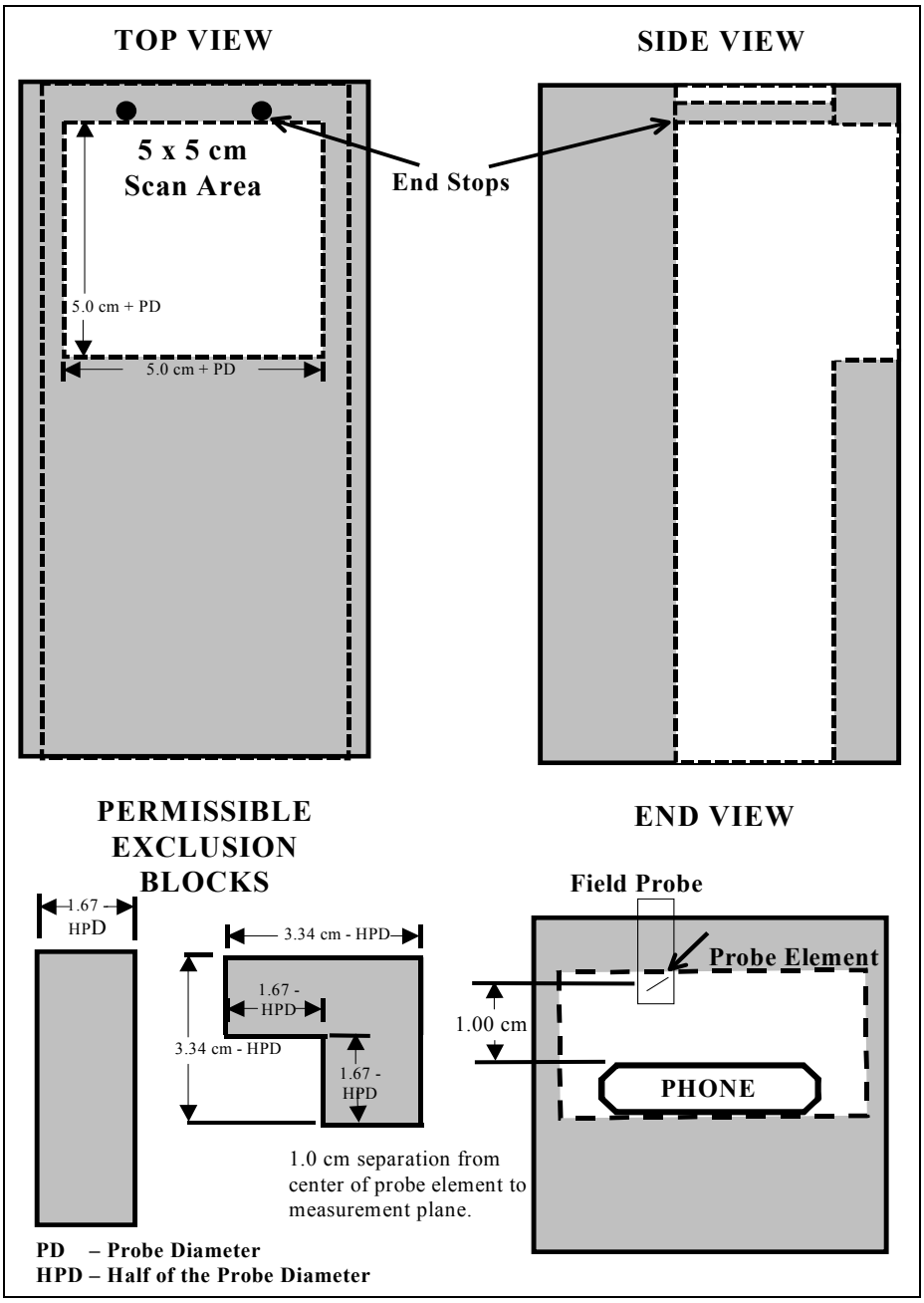

Figure 4-6 - Near-Field emissions test fixture, manual scan method

Copyright © 2006 IEEE. All rights reserved.
This is a draft, subject to change until final approval by ANSI and publication.

--`,,```,,,,````-`-`,,`,,`,`,,`---

Copyright The Institute of Electrical and Electronics Engineers, Inc.
Provided by IHS under license with IEEE
No reproduction or networking permitted without license from IHS Not for Resale

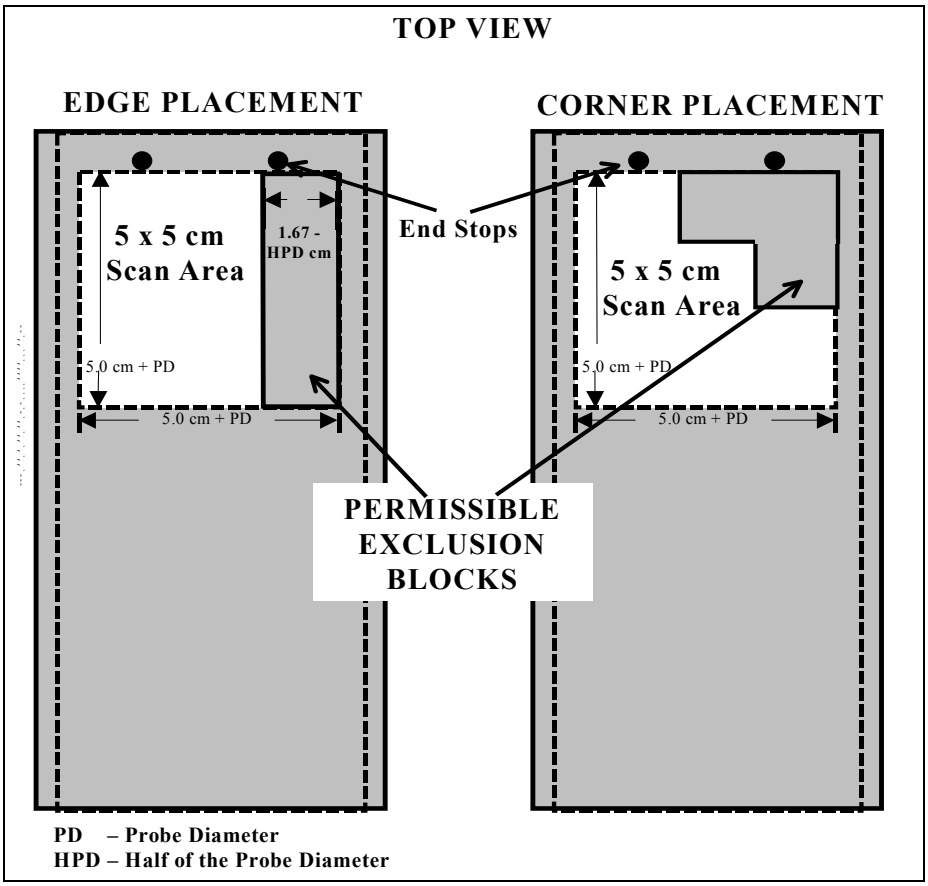

Figure 4-7 - Exclusion block placement, manual scan method

DRAFT
Copyright © 2006 IEEE. All rights reserved.
This is a draft, subject to change until final approval by ANSI and publication.

Copyright The Institute of Electrical and Electronics Engineers, Inc.
Provided by IHS under license with IEEE
No reproduction or networking permitted without license from IHS
Not for Resale

4.4.1.2.2 Automated scanning method

Deleted: Scanning

Deleted: Method

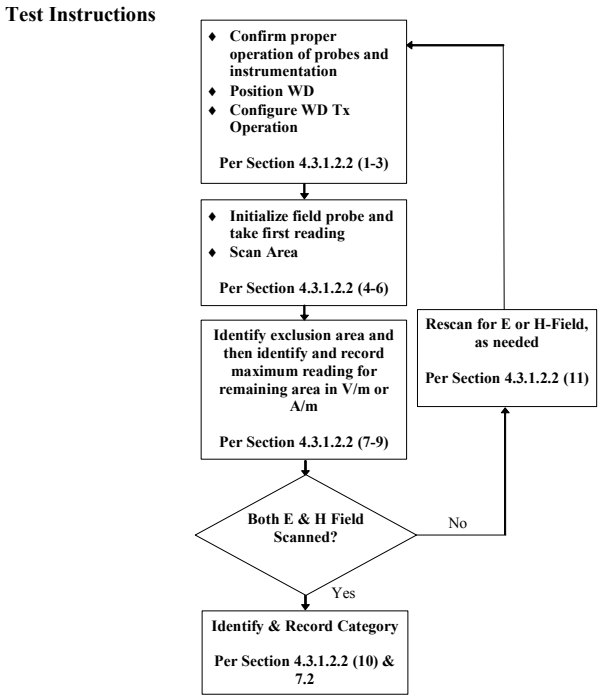

Figure 4-8 - WD near-field emission automated test flowchart

1. Confirm proper operation of the field probe, probe measurement system and other instrumentation and the positioning system.

2. Position the WD in its intended test position. The gauge block, depicted in Section A.2.1, can simplify this positioning. Note that a separate E- and H-field gauge block will be needed if the edge of the probe sensors are at different distances from the tip of the probe.

3. Configure the WD normal operation for maximum rated RF output power, at the desired channel and other operating parameters, (e.g. test mode) as intended for the test. [25],[26]

4. The center sub-grid shall be centered on the center of the WD output (acoustic or T-Coil output), as appropriate. Locate the field probe at the initial test position in the 5 x 5 cm grid, which is contained in the measurement plane, described in Section 4.3.3 and illustrated in Figure A-2. If the field alignment method is used, align the probe for maximum field reception.

[25] Normally the amount of time a display remains on is a customer defined option. When this is true the display should not be illuminated during the test.

[26] Some devices allow for no transmission during silent intervals of a call. This feature must be disabled during the test e.g. no DTX (Discontinuous Transmission).

DRAFT
Copyright © 2006 IEEE. All rights reserved.
This is a draft, subject to change until final approval by ANSI and publication.

Copyright The Institute of Electrical and Electronics Engineers, Inc.
Provided by IHS under license with IEEE
No reproduction or networking permitted without license from IHS
Not for Resale

5. Record the reading.

6. Scan the entire 5 x 5 cm region in equally spaced increments and record the reading at each measurement point. The distance between measurement points shall be sufficient to assure the identification of the maximum reading. See Section E.2.3 for guidance in determining the distance between measurement points.

Deleted: highest

7. Identify the five contiguous sub-grids around the center sub-grid with the lowest maximum field strength readings. Thus the 6 areas to be used to determine the WD's highest emissions are identified and outlined for the final manual scan. Please note that a maximum of five blocks can be excluded for both E- and H-field measurements for the WD output being measured. Stated another way, the center sub-grid and 3 others must be common to both the E- and H-field measurements.

8. Identify the maximum field reading within the non-excluded sub-grids identified in step 7.[27]

Deleted: highest

9. Convert the maximum field strength reading identified in step 8 to V/m or A/m, as appropriate. For probes which require a probe modulation factor, this conversion shall be done using the appropriate probe modulation factor described in section 4.2.2.1 and the calibration specified in Section C.3.1.

Deleted: highest

10. Repeat steps 1-10 for both the E- and H-field measurements.

11. Compare this reading to the categories in Section 7 and record the resulting category. The lowest category number listed in section 7.2 Table 7-4 or Table 7-5, obtained in step 10 for either E or H field determines the M category for the audio coupling mode assessment. Record the WD category rating.

12. If the center of the T-Coil location is in a different position from the speaker opening, repeat steps 1-11 for the T-Coil mode assessment. The grid shall be shifted so that it is centered on the axial measurement point. Both the E and H-Field are measured for this grid. The lowest category, per Table 7-4 or Table 7-5, obtained in step 11 for either E or H-Field determines the T category for the T-Coil assessment. Record the WD category rating.

[27] Probe anisotropy may add significantly to the measurement uncertainty. This factor may be minimized by first moving the probe to the location of maximum measurement and then rotating the probe to align it for the maximum reading at that position. This rotation around the axis or shaft of the probe is recommended in order to minimize uncertainty due to anisotropy in the probe.

DRAFT
Copyright © 2006 IEEE. All rights reserved.
This is a draft, subject to change until final approval by ANSI and publication.

--`,,```,,,,````-`-`,,`,,`,`,,`---

Copyright The Institute of Electrical and Electronics Engineers, Inc.
Provided by IHS under license with IEEE
No reproduction or networking permitted without license from IHS
Not for Resale

5. Hearing aid RF near-field immunity test

Deleted: Aid
Deleted: Near
Deleted: Field
Deleted: Immunity
Deleted: Test

This section prescribes the measurement method to be used in determining the immunity level of a hearing aid to radiated electromagnetic fields originating from a WD. The method is intended to simulate the RF fields experienced by a hearing aid equipped user of a WD and so evaluates the hearing aid's immunity.

This test procedure uses Near-Field illumination in assessing the hearing aid immunity rather than Far-Field illumination. This is a more realistic simulation of the Near-Field condition experienced by the hearing aid, the result is a better correlation between the measured immunity level and the immunity level experienced by an actual hearing aid equipped user of a WD.

Far-Field illumination testing, such as in a WB TEM, offers advantages of being more repeatable and less sensitive to issues of placement and positioning. Also Far-Field illumination testing is commonly required in other standards. Some may prefer to test immunity using a WB TEM to avoid duplicative testing or for other reasons. Section 5.4 provides guidance on WB TEM testing as an alternate method. However, in case of dispute the results obtained with the Near-Field illumination test, as described in this section shall take precedent.

All acoustic measurements are to be made unweighted (i.e. with the acoustic instrumentation set for "linear" or flat frequency response), unless otherwise noted.

The evaluation of the interference effect of the WD's RF emissions on a hearing aid in acoustic coupling mode is procedurally very similar to that used for the T-Coil mode. For this reason the procedures for evaluating a hearing aid's immunity to the RF emission, set forth in this section, is called for in evaluating the T-Coil coupling mode. For simplicity, some helpful notes are contained within the procedures in this section for evaluation of the T-Coil coupling mode. However, for the T-Coil mode an evaluation must be made of the effects of baseband interference sources to fully evaluate the signal quality that a user experiences.

5.1 Test facilities and equipment

Deleted: Facilities
Deleted: Equipment

This section describes the test facility and equipment to be used for these measurements.

5.1.1 General test conditions

Deleted: Test
Deleted: Conditions

5.1.1.1 Ambient conditions

Deleted: Conditions

See Section 8.2 for ambient conditions

5.1.1.2 Power supply voltage

Deleted: Supply
Deleted: Voltage

A fresh battery of the type specified by the hearing aid manufacturer shall be mounted inside of the hearing aid during the immunity test. The battery should be within ±5% of its rated voltage, under no-load conditions.

5.1.1.3 Test sites

Deleted: Sites

Any indoor site meeting the conditions as specified in Section 8.2 and C.1.1 is acceptable, provided the equipment used for application of radio-frequency fields is electromagnetically shielded to the extent necessary to meet federal government RF safety regulations and electromagnetic emission regulations.[28] A sound-proof booth is not a mandatory requirement. However, ambient noise levels in the test area should be as low as possible and constant for the duration of the test.

5.1.2 Test equipment

Deleted: Equipment

This section lists the test equipment needed to perform the Near-Field Immunity Tests, using the generic test equipment hookup diagram shown in Figure 5-1. The test equipment used shall meet the applicable specifications of Annex D.

[28] See ANSI C95.1 and relevant sections of FCC regulations, CFR 47, for more details.

DRAFT
Copyright © 2006 IEEE. All rights reserved.
This is a draft, subject to change until final approval by ANSI and publication.

Copyright The Institute of Electrical and Electronics Engineers, Inc.
Provided by IHS under license with IEEE
No reproduction or networking permitted without license from IHS
Not for Resale

1. Two resonant dipoles designed to radiate between 800 - 950 MHz and 1.6 - 2.5 GHz
2. RF Signal Generator
3. RF Power Amplifier
4. RF Directional Coupler
5. RF Power Meters (2)
6. Microphones
   a) Pressure field microphone.
   b) Free field microphone.
7. Microphone Pre-amplifier
8. Frequency Analyzer
9. Ear Coupler
10. Microphone Calibrator
11. Audio Signal Generator
12. Acoustic Transmission Line
13. Hearing Aid Immunity Test Fixture
14. RF Cables

5.2 Test setup and validation

Deleted: Setup
Deleted: Validation

Section 5.2.1 describes how to configure the experimental setup required for hearing aid RF immunity tests. Before hearing aid testing commences, the experimental setup shall be validated. Sections 5.2.1 through 5.2.5 include a set of pre-test procedures designed to validate the experimental setup in order to ensure the accuracy of the results. In order to verify that the hearing aid performs per the manufacturer's specifications, Section 5.2.5 advises that the hearing aid be pre-tested per ANSI S3.22-1996.

5.2.1 Hearing aid near-field immunity test setup

Deleted: Aid
Deleted: Near
Deleted: Field
Deleted: Immunity
Deleted: Test
Deleted: Setup

Figure 5-1 is a schematic of how the equipment listed in section 5.1.2 is set up for RF Immunity Testing. As shown, the hearing aid acoustic output is connected to the microphone via an acoustic transmission line and ear coupler. The microphone is then coupled to the audio frequency analyzer via a pre-amplifier. This constitutes the audio frequency measurement system. From the RF source, an RF Signal is fed to an RF Power Amplifier, to supply power to the dipole. A two-way directional coupler with RF power meter is placed in-line just before the dipole in order to monitor forward and reflected RF power into the dipole. The RF power level to the dipole is set using a CW RF signal. After the proper test level is established 1 kHz 80% AM is added for the actual test.[29]

The relative spacing between the hearing aid under test and the dipole is critical to the accuracy and repeatability of the test. See Section E.2.3 for a more detailed discussion of the effect of variation in the relative spacing on the measurement uncertainty.

5.2.2 Check for RF interference to test equipment

Deleted: Interference
Deleted: Test
Deleted: Equipment

Set up the equipment as illustrated and described in section 5.2.1. With the hearing aid battery removed and RF off, record the ambient spectrum and sound pressure level. Then energize the dipole with the maximum RF power that will be used in the test plus 3 dB, at 900 MHz. Apply 1 kHz 80% AM. Record the audio band spectrum and overall

[29] A 1 kHz 80% AM is used because of its availability in most signal generators and its common usage in other RF immunity test standards. The 1 kHz 80% AM modulation has a fixed and well understood relationship to the modulations used in WDs. This relationship and the physics which determines the relationship is described in Appendix 4, "Square Law Detection of RF Signals" in Joyner, K.H. et al, Interference to Hearing Aids by the Digital Mobile Telephone System, Global System for Mobile Communications (GSM), NAL Report #131, National Acoustic Laboratory, Australian Hearing Series, Sydney 1995 and in Annex A, "Rationale for the choice of modulation for tests related to the protection against RF emissions from digital radio telephones" in IEC 61000-4-3-2002.

DRAFT
Copyright © 2006 IEEE. All rights reserved.
This is a draft, subject to change until final approval by ANSI and publication.

Copyright The Institute of Electrical and Electronics Engineers, Inc.
Provided by IHS under license with IEEE
No reproduction or networking permitted without license from IHS
Not for Resale

sound pressure level from the frequency analyzer. Alternative measurements can be made at the 1/3 octave bands from 300 Hz to 3.4 kHz, to determine if any change in SPL, due to the RF from the dipole, has occurred.

Repeat the procedure with a 1 W, 1.8 GHz RF signal modulated with a 1 kHz 80% AM. Record the spectrum and overall sound pressure level.

There should be no change in spectrum and overall sound pressure level from ambient during this system check (with the hearing aid battery removed), indicating that the system is immune to interference.[30] If there is an increase in recorded sound pressure level or peaks in the spectrum that appear due to exposure to the energized dipole, it shall be necessary to provide a separation distance between the victim device (which shall be determined) and the radiating dipole. Repeat the above test with increasing separation distance between the victim device and dipole and record the distance at which the interference disappears. Configure the test setup described in section 5.2.1 such that this minimum separation distance is achieved between the test equipment and the dipole. If the determined separation distance is impractical, shielding may be employed to eliminate the interference to the test equipment.

5.2.3 Characterization of tubing acoustic attenuation and resonances (Informative)

Deleted: Tubing
Deleted: Acoustic
Deleted: Attenuation
Deleted: Resonances
Deleted: INFORMATIVE

Longer lengths of tubing have the effect of attenuating the higher audio frequencies as well as introducing tubing resonances. Therefore, it is important to characterize the acoustic transmission line used in testing. See Selection and Calibration of Acoustic Transmission Line, Section C.6.

Depending on the measurement, characterization of tubing over the entire frequency range may not be necessary. Because acoustic output SPL measurements are at 1 and 1.3 kHz, tubing attenuation needs only to be determined at these two frequencies for Near-Field immunity testing. This can be accomplished easily by connecting the desired length of tubing to the acoustic output of the hearing aid being tested, and with its volume set at the reference test position (RTP), as defined in ANSI S3.22-1996, its acoustic output SPL relative to changing input SPL at a fixed frequency can be measured. From these Input/Output curves, the input SPL relative to a changing acoustic output level at this fixed frequency can be easily determined. However, if an accurate view of the overall spectrum is desired, then the tubing should be characterized.

5.2.4 Audio input source setup

Deleted: Input
Deleted: Source
Deleted: Setup

The experimental setup for this section is illustrated in Figure 5-1. See Section C.2 for a description of the audio input source.

5.2.5 RF field strength validation

Deleted: Field
Deleted: Strength
Deleted: Validation

The RF field strength presented to the EUT shall be validated either by measuring the field strength using RF field probes or by having the dipoles calibrated per Section C.4.

5.2.6 Pre-tests required for the hearing aid under test (Informative)

Deleted: Tests
Deleted: Required
Deleted: Hearing
Deleted: Aid
Deleted: Under
Deleted: Test
Deleted: INFORMATIVE

Select the appropriate pre-tests from ANSI S3.22 - 1996.

5.3 RF immunity test procedure - primary

Deleted: Immunity
Deleted: Test
Deleted: Procedure
Deleted: Primary

This section describes the procedures for testing a hearing aid for immunity to Near-Field electromagnetic interference. The measurements are performed first using the dipole for the 800-950 MHz band and then repeated with the dipole for the 1.6-2.5 GHz band.

[30] The requirement of "no change" is defined as the undesired signal or reading being at least 20 dB less than the measured value. The 20 dB requirement is consistent with the similar requirement for RF Test Enclosures, found in Annex C.1.1.

DRAFT
Copyright © 2006 IEEE. All rights reserved.
This is a draft, subject to change until final approval by ANSI and publication.

Copyright The Institute of Electrical and Electronics Engineers, Inc.
Provided by IHS under license with IEEE
No reproduction or networking permitted without license from IHS
Not for Resale

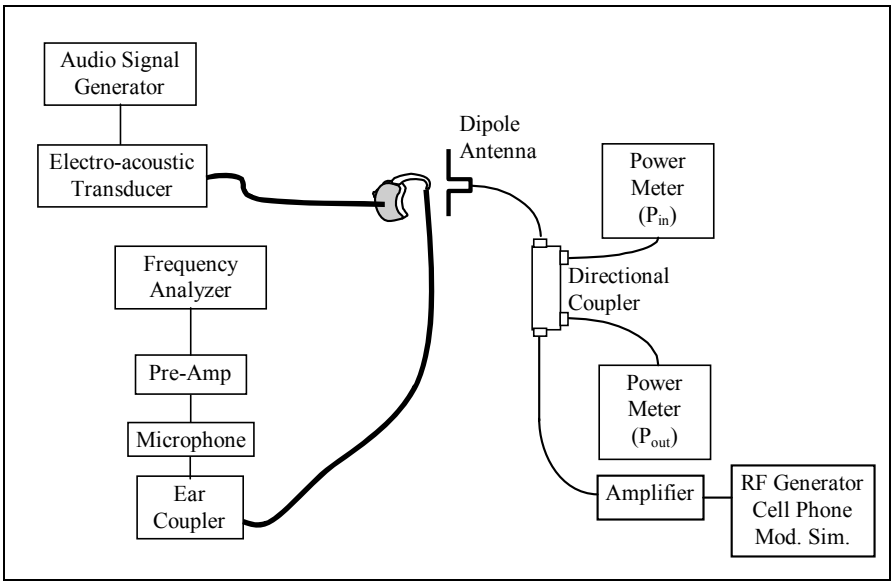

Figure 5-1 - Near-field immunity test setup

Deleted: Field

DRAFT
Copyright © 2006 IEEE. All rights reserved.
This is a draft, subject to change until final approval by ANSI and publication.

Copyright The Institute of Electrical and Electronics Engineers, Inc.
Provided by IHS under license with IEEE
No reproduction or networking permitted without license from IHS
Not for Resale

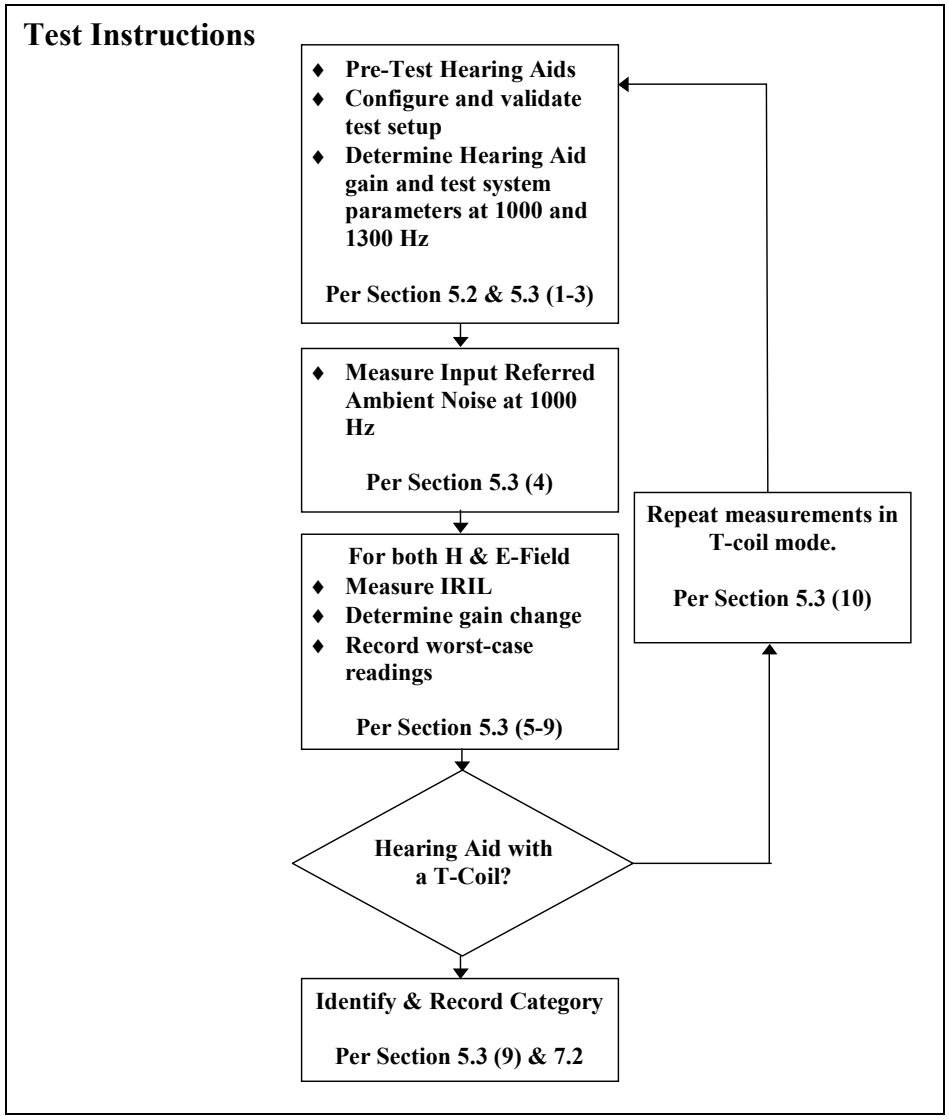

Figure 5-2 - Hearing aid immunity test flowchart

1) Equipment Setup

   Configure the equipment as illustrated in Figure 5-1 and described in Section 5.2.

2) Hearing Aid Setup

   a) Set the hearing aid to acoustic mode.

DRAFT
Copyright © 2006 IEEE. All rights reserved.
This is a draft, subject to change until final approval by ANSI and publication.

Copyright The Institute of Electrical and Electronics Engineers, Inc.
Provided by IHS under license with IEEE
No reproduction or networking permitted without license from IHS
Not for Resale

b) Couple the hearing aid through an acoustic transmission line, as defined in Section 5.2.3. The acoustic transmission line, in turn is connected to an ear coupler in a hearing aid test box or other suitable test arrangement.
c) Adjust the hearing aid to the Reference Test Gain with 60 dB SPL input using HFA (high frequency average) measurements as defined in ANSI S3.22-1996.
d) Secure the volume control against movement with non-conductive tape, glue or other means.
e) Connect the audio input source.

3) Measure hearing aid input versus output gain curve at 1000 and 1300 Hz

Perform an Input/Output measurement curve of the hearing aid with an acoustic input to the hearing aid covering the range of measurement noise floor to 90 dB SPL in 5 dB steps, at 1000 and 1300 Hz.[31]

4) Measure the IRAN (Input Referred Ambient Noise) at 1000 Hz

a) Record the acoustic output SPL from the hearing aid, in the 1 kHz 1/3 octave filter band, with the RF source and acoustic source turned off.
b) Using the Input/Output characteristics at 1000 Hz, determine the gain for the measured acoustic output level.
c) Subtract the 1000 Hz gain from the acoustic output SPL. The result is the ambient acoustical noise referenced to the input, which shall be called the Input Referenced Ambient Noise (IRAN). The IRAN should be sufficiently below the target Input Referenced Interference Level (IRIL) to permit accurate measurement. (The IRAN should be at least 10 dB below the IRIL.)

5) Hearing Aid Placement

a) To improve the repeatability of the test, the tester should perform prescans of the hearing aid to determine the regions on the hearing aid and dipole that appear most sensitive and to find the corresponding measurement plane and antenna polarization.[32]
b) The hearing aid should then be placed initially in the configuration determined to be most sensitive.
c) The hearing aid shall be placed with the selected reference orientation facing the dipole. For E-field exposure the hearing aid shall be placed 10 mm from the dipole tip. For H-field exposure the hearing aid shall be placed 10 mm from the dipole center.
d) Record the hearing aid orientation in the test report.

6) IRIL Measurement (E-field and H-field)

a) Energize the dipole at its middle frequency with an RF signal modulated with a 1 kHz AM signal. Tune the dipole or adjust the matching section, if necessary, to meet the VSWR requirement of Section D.5. Set the power to assure that the interference measured is not saturating the hearing aid.
b) The carrier frequency shall be stepped or swept as specified in IEC 61000-4-3, using a step size of 1% of the carrier frequency. Determine the frequency of maximum response.

Monitor the HA response and adjust RF power so the HA output does not exceed the target SPL.

NOTE: A constant RF drive level may be used to facilitate automation of the testing. However,

[31] In the following steps this Input/Output characteristic information shall be used to determine IRIL levels at 1 kHz and to determine the 65 dB SPL input related biasing level at 1300 Hz.

[32] One way to perform the prescan is by placing low dielectric 10 mm spacers at the tip and feed of a dipole and manually scanning around the hearing aid to locate the hearing aid region, dipole location, and measurement plane and antenna angle of maximum sensitivity.

DRAFT
Copyright © 2006 IEEE. All rights reserved.
This is a draft, subject to change until final approval by ANSI and publication.

Copyright The Institute of Electrical and Electronics Engineers, Inc.
Provided by IHS under license with IEEE
No reproduction or networking permitted without license from IHS Not for Resale

changes in antenna response with frequency will result in some variation in the field strength presented to the EUT. Care shall be taken to assure that the true frequency of maximum response is identified.

c) Set the carrier frequency to the frequency of maximum response.
d) Drop the RF power starting at 5 dB and confirm that the hearing aid response is consistent with the input/output curve determined in Step 3). If the response is not consistent, continue to reduce the RF level until the hearing aid response is consistent with the input/output curve. If the hearing aid was in saturation, repeat Step c) at the reduced RF power.
e) While monitoring the hearing aid, rotate the hearing aid in the plane parallel with the dipole elements. Rotate the hearing aid 360° and determine the position of maximum response.[33]
f) With the hearing aid at the position and frequency of maximum response, determine and record the net CW RF power level (forward power minus reflected power) that produces an IRIL level of 55 dB SPL. Once the required 55 dB SPL response is achieved, turn off the modulation and record the net CW RF power level.[34]
g) In order to establish a scan of a second orientation, turn the hearing aid 90° in the plane perpendicular to the dipole elements.
h) Repeat Steps b) through f) for the new position.

The RF power recorded is the net RF power, as measured with a power meter and directional coupler. From the recorded RF power levels determine the resulting H-Field strength produced by the dipole, derived from the antenna calibration procedure in Section C.4. The following steps are used to derive the field strength from the calibration chart derived in Section C.4:

1. At the frequency of interest, determine the net RF power into the dipole.
2. Locate this frequency in the Calibration Chart and subtract the chart power at this frequency from the measured net power level.

   e.g., $(P_{measured} - P_{chart})$.
3. Add this value to the calibrated field strength value used to create the chart.

   e.g., For E-Field $(P_{measured} - P_{chart})+49.54$

   For H-Field $(P_{measured} - P_{chart})$
4. The result is the E or H-Field strength at a 1-cm distance.

This shall be the maximum H-Field immunity for the band swept.

7) Establish 1300 Hz Hearing Aid Bias
   a) Apply a 1300 Hz acoustic bias signal to the microphone input.[35]
   b) With the Frequency Analyzer resolution bandwidth set to 30 Hz, measure the hearing aid acoustic output at 1300 Hz.
   c) Adjust the amplitude of the 1300 Hz signal to produce 65 dB SPL at the hearing aid microphone input port, as determined from the measured hearing aid input/output characteristics from Step 3).
   d) Document acoustic output level and the gain at 1300 Hz.

[33] Care should be taken when positioning the hearing aid so that it does not precess during rotation and maintains the specified 10 mm spacing from the dipole.
[34] Recording the net CW RF level avoids all of the variations in the responses to modulated RF signals that occur among various manufacturers and models of RF instrumentation. All RF instruments indicate the same level, within instrument uncertainty, in response to a CW (unmodulated) RF signal.
[35] The bias signal established the hearing aid acoustic output level using a known input, which allows for the detection of any RF carrier effects on compression circuitry.

DRAFT
Copyright © 2006 IEEE. All rights reserved.
This is a draft, subject to change until final approval by ANSI and publication.

Copyright The Institute of Electrical and Electronics Engineers, Inc.
Provided by IHS under license with IEEE
No reproduction or networking permitted without license from IHS Not for Resale

e) During T-coil mode test, apply a 1300 Hz magnetic bias signal to the hearing aid T-coil that gives the equivalent acoustic output at 1300 Hz, as determined in step 3) to that delivered by an acoustic input of 65 dB SPL.
f) During the test monitor the output for changes in gain.

NOTE: The purpose of this step is to measure any gain change and determine if the gain remains within 6 dB of its value before the application of the RF, as required by Section 7.2. It is desirable that 1300 Hz sine wave test signal be used to determine any gain changes that may occur due to RF carrier effects; however, accurate results may not be possible with some hearing aids by using simple sine wave signals. Such devices may require the use of voice-like signals, e.g., real voice, and artificial voice (see ITU recommendation P.50). Such signals may have frequency weighting and temporal characteristics that require additional processing to correlate with sine wave based test methods. It is up to the tester to ensure that non-sine test signals are properly implemented. A suggested method would be to include an artificial speech signal along with the 1300 Hz signal. The reference gain can then be determined by using just the 1300 Hz portion of the combined artificial voice/1300 Hz signal.

8) Determination of Gain Change due to RF Signal

a) Remove the RF signal, disable the modulation and apply the 1300 Hz acoustic bias to the hearing aid.
b) Adjust the amplitude of the bias, as established in Step 7), so that an equivalent input level of 65 dB SPL is achieved.
c) Using the same worst-case frequency and orientation from the previous measurement, energize the dipole with a CW RF signal, using the same peak RF level used in step 6).
d) Record any gain changes greater than 2 dB. Gain change is determined by comparing the audio level with the RF source both on and off.
e) If the gain change is greater than 2 dB, use the gain adjusted by the change measured in this step when calculating the IRIL. See the second note below for further details.

NOTE: The unmodulated RF level shall be increased by 5.1 dB to achieve the same peak RF power levels as those achieved by 1 kHz 80% AM.

Deleted: m

NOTE: The purpose of this check for hearing aid gain change is to determine if the hearing aid gain is affected directly by the RF exposure of the test rather than by the demodulated audio signal. Gain measurements in step 3) account for the audio effect on gain but not the RF effect. This step is used to determine if the gain measured in step 3) represents gain during RF exposure. If the gain does change by more than 2 dB then the actual hearing aid gain under the RF exposure test condition shall be used in calculating the acoustic input referenced level rather than the hearing aid gain measured before the test. The following steps shall be taken to properly account for gain compression or expansion in the hearing aid:

1. Record the maximum gain deviation greater than 2 dB during RF exposure.
2. Add to the acoustic output level the amount by which the gain decreased from the acoustic output level measured in step 7). If the gain increased, the amount of gain increase will instead be subtracted from the acoustic output level.
3. Use the new, adjusted acoustic output level in determining the IRIL value and related test results.[36,37]

[36] Additionally there is a specified limit for gain compression, located in Section 7, in Table 7-2 and Table 7-3. The hearing aid must meet both the interference output limit and the gain compression limit to achieve a given category.

[37] For example, if the 1 kHz acoustic output level at 900 MHz is 100 dB SPL and there has been less than a 2 dB deviation in the 1300 Hz bias level at 900 MHz, then there has been no significant deviation in the gain and no

DRAFT
Copyright © 2006 IEEE. All rights reserved.
This is a draft, subject to change until final approval by ANSI and publication.

Copyright The Institute of Electrical and Electronics Engineers, Inc.
Provided by IHS under license with IEEE
No reproduction or networking permitted without license from IHS
Not for Resale

9) IRIL & Gain Change Measurements (E-Field)

Repeat steps 5) through 8)while exposing the hearing aid to within 10 mm of the tip of one radiating dipole element. This should expose the hearing aid under test to the maximum electric field from the dipole.[38]

10) Acoustic IRIL Measurements (E-Field and H-Field) for 1.6-2.5 GHz

Repeat steps 5) through 9) for the 1.6 - 2.5 GHz band using the correct dipole for that frequency range.

11) Record Data

a) Record the minimum E and H-Field levels for each of the frequency bands that produce an IRIL level of 55 dB SPL. This is the desired overall test result, which shall be compared against the limit threshold as outlined in Section 7.2 in Table 7-2 through Table 7-5.
b) Determine the category according to the immunity ranges given in Table 7-2 through Table 7-5 of Section 7.2.
c) Record the category achieved by the hearing aid under test.

12) Measurement of Additional Operating Modes (E-Field and H-Field)

Repeat steps 1) through 11) of this section with the hearing aid in each operating mode provided, e.g. microphone, directional microphone (if provided) and T-Coil (if provided).

---

special treatment is required. Complete the calculations in the normal fashion. From the 1 kHz I/O curve previously generated, determine the acoustic input that corresponds to a 100 dB acoustic output. This would be the IRIL level measured at 1 kHz for 900 MHz.

However, if the acoustic output level at 1 kHz is 100 dB SPL and there has been a decrease of 6 dB SPL in the 1300 Hz bias level at 900 MHz, then an adjustment must be made for the gain compression. The gain decrease of 6 dB would be added to the 1 kHz acoustic output level at 900 MHz. From the 1 kHz I/O curve, determine the acoustic input that corresponds to the new 106 dB acoustic output.

[38] A dipole produces its maximum H-Field at the center of the dipole and the maximum E-Field near the tip of the dipole. A hearing aid is tested both near the center and tip of the dipole so as to evaluate its immunity to both high E-Field and high H-Field emissions. Thus the hearing aid immunity test is repeated, once 10 mm from the center of the dipole and then 10 mm from the tip of the dipole.

DRAFT
Copyright © 2006 IEEE. All rights reserved.
This is a draft, subject to change until final approval by ANSI and publication.

Copyright The Institute of Electrical and Electronics Engineers, Inc.
Provided by IHS under license with IEEE
No reproduction or networking permitted without license from IHS Not for Resale

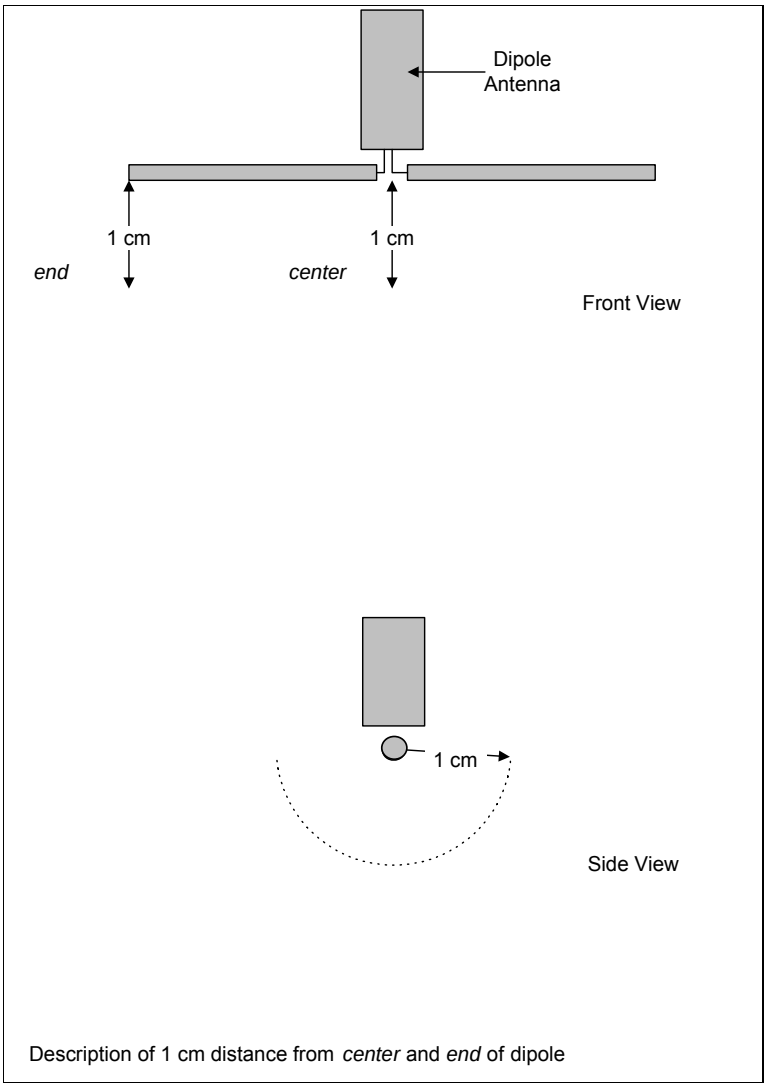

Figure 5-3 - Illustration of test positions - 10 mm distance from center and end of dipole

5.4 RF immunity test procedure – alternate

Deleted: Immunity
Deleted: Test
Deleted: Procedure
Deleted: Alternate

This section provides guidance on WB TEM testing as an alternate method.

DRAFT
Copyright © 2006 IEEE. All rights reserved.
This is a draft, subject to change until final approval by ANSI and publication.

Copyright The Institute of Electrical and Electronics Engineers, Inc.
Provided by IHS under license with IEEE
No reproduction or networking permitted without license from IHS
Not for Resale

In case of dispute, the results obtained with the Near-Field illumination test, as described in Section 5.3, shall take precedence.[39]

Joint investigations between the IEC and ANSI committee were pursued in the interest of reaching consensus on a single test. The conclusion reached was that either the dipole test or the WB TEM test yields a satisfactory evaluation of the RF immunity of the hearing aid. However, the tests are not equivalent in that a fixed relationship in the test results could not be established.

Deleted: Immunity

5.4.1 WB TEM RF immunity test procedures

1) The RF-test equipment, test configuration and test procedures as specified in IEC 61000-4-3 shall apply. This requires that a 1 kHz 80 % sine amplitude modulation of the carrier wave be used.

   NOTE: For small systems (such as hearing aids) suitable WB TEM cells and striplines may be used as indicated in IEC 61000-4-20 (2003).

2) Other than the hearing aid, no objects that could distort the RF field shall be present in the test volume.

3) In order to remove the metallic ear simulator or coupler as specified in IEC 60711 and IEC 60126 from the test volume, the normal tubing between the hearing aid and the ear simulator or coupler shall be replaced by tubing of 2 mm bore and with a length typically between 50 mm and 500 mm. For in-the-ear instruments, a suitable adapter shall couple the outlet from the receiver to the tubing. This adapter and the length of the tubing are not critical, as the hearing aid gain is determined in each individual test configuration. The complete acoustical coupling arrangement used shall be described when presenting the results. An example of a suitable test arrangement is given in Figure 5-4.

   NOTE: Measurements should be made to ensure that the background noise level of the test configuration is at least 10 dB lower than the lowest interference level to be measured.

4) The hearing aid volume control shall be adjusted to the reference test gain control position as described in Amendment 1 to IEC 60118-0 or Amendment 1 to IEC 60118-7. Any other controls on the hearing aid shall be set to positions giving the widest frequency response and the maximum acoustic output.

5) With the acoustical coupling described in Section 5.4.1 step 3) and the test conditions described in Section 5.4.1 step 4), the input-output response of the hearing aid shall be measured at 1000 Hz as described in IEC 60118-0 or IEC 60118-7. From the input-output response curve determine the output obtained at 55 dB SPL input level. If the hearing aid provides a T-Coil, determine the output sound pressure level for an input of 20 mA/m. Examples of input-output response curves are given in Figure 5-5.

[39] For further information see the HAMPIS Report, Comparison of Mobile phone electromagnetic near field with a up scaled electromagnetic far field, using hearing aid as reference, 21 October 1999, available from DELTA, Venlighedsvej 4, DK-2970 Hørsholm, Denmark, Tel.: +45 45 86 77 22, Fax: +45 45 86 58 98 or from the DELTA Web site at http://www.delta.dk/hampiis/report.htm.

Deleted: e

DRAFT
Copyright © 2006 IEEE. All rights reserved.
This is a draft, subject to change until final approval by ANSI and publication.

--`,,```,,,,````-`-`,,`,,`,`,,`---

Copyright The Institute of Electrical and Electronics Engineers, Inc.
Provided by IHS under license with IEEE
No reproduction or networking permitted without license from IHS Not for Resale

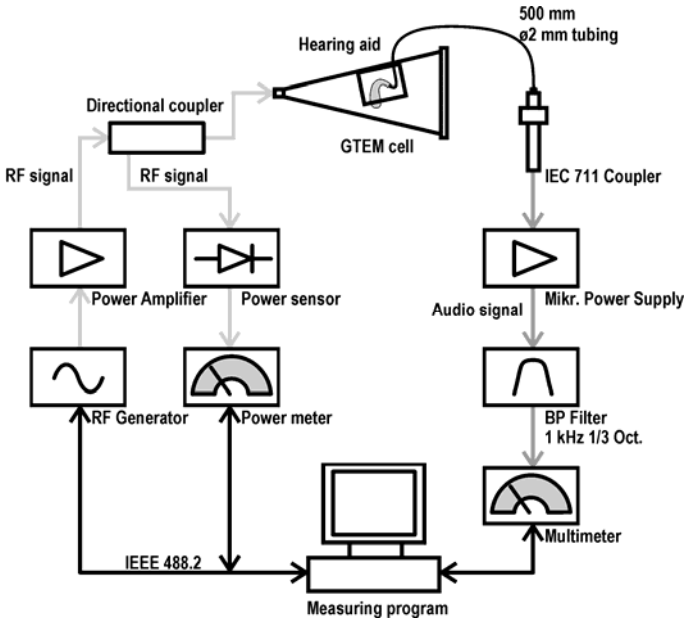

Figure 5-4 - Example of test arrangement for hearing aid immunity measurements

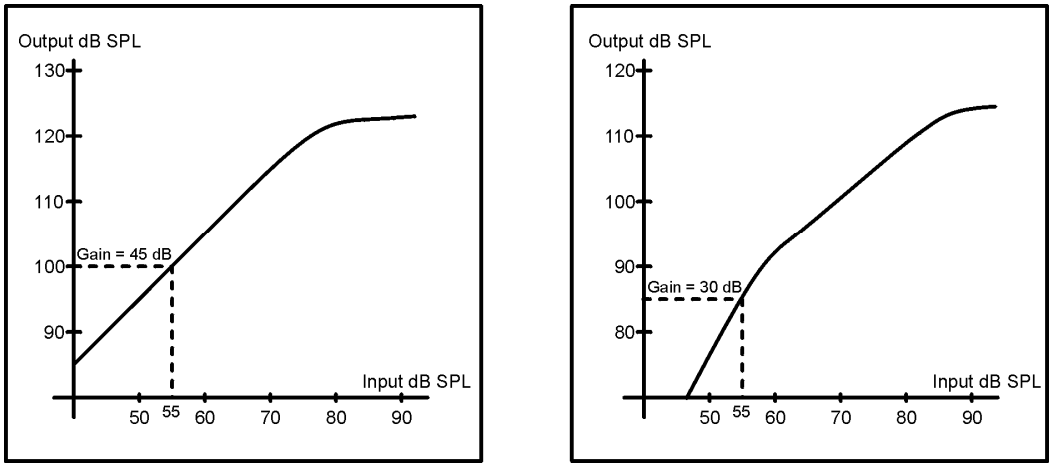

Figure 5-5 - Examples of input-output response curves at 1000 Hz and the determination of output SPL at an input level of 55 dB SPL.

6) The hearing aid, with the controls set as in Section 5.4.1 Step 5), shall be placed in the RF field, and the sound pressure level of the interference signal at 1000 Hz shall be determined.

DRAFT
Copyright © 2006 IEEE. All rights reserved.
This is a draft, subject to change until final approval by ANSI and publication.

Copyright The Institute of Electrical and Electronics Engineers, Inc.
Provided by IHS under license with IEEE
No reproduction or networking permitted without license from IHS
Not for Resale

The hearing aid shall be placed in the initial or reference orientation, as described in Section 5.3.

Using a frequency near the center of each frequency band to be tested (800-950 MHz and 1.6-2.5 GHz), rotate the hearing aid in each of the two positions, as required in Section 5.3, and identify the position of maximum sensitivity.

The measurement of the interference sound pressure level shall be carried out with the hearing aid in the orientation for which the interference signal reaches its maximum value. The maximum value within each frequency range is used to characterize the interference.

Sweep the frequency through the frequency band being tested and identify the frequency of maximum sensitivity.

NOTE: Measurement results from hearing aids with automatic signal processing (ASP) characteristics or other non-linear processing should be interpreted with care, as the interference signal may activate these systems in an unpredictable way. If a "test mode" is provided for programmable hearing aids, it should be used during the test.

Follow the procedure described in Section 5.3 Step 8), Determination of Gain Change. If gain change does occur it shall be accounted for in the final result, as described in Section 5.3 Step 8).

7) In the worst-case orientation and at the frequency at which the interference reaches its maximum value, increase the field strength until the hearing aid output level determined in Step 5) is reached. Then record the field strength required to produce an IRIL = 55 dB SPL in the hearing aid. This field strength that produces a hearing aid IRIL of 55 dB SPL is used to determine the hearing aid category using Table 7-2 and Table 7-3 of Section 7.2.

The measurement shall be carried out with the hearing aid in each operating mode provided, e.g. microphone, directional microphone (if provided) and T-Coil (if provided).

DRAFT

Copyright © 2006 IEEE. All rights reserved.

This is a draft, subject to change until final approval by ANSI and publication.

--`,,```,,,,````-`-`,,`,,`,`,,`---

Copyright The Institute of Electrical and Electronics Engineers, Inc.
Provided by IHS under license with IEEE
No reproduction or networking permitted without license from IHS Not for Resale

6. Wireless device T-Coil signal test

Deleted: Device
Deleted: Signal
Deleted: Test

This section describes the measurement of the T-Coil signal from the WD. Three quantities are measured and evaluated. The first is the field intensity of the desired signal at the center of the audio band. The second is the frequency response of the desired signal measured across the audio band. The third is the signal quality, which is defined as the difference between the desired and undesired magnetic field levels. The measurement procedure is fully described in Section 6.3.1. Parameters for each of these quantities are found in Section 7.

Measure both the desired and undesired magnetic signals with the WD in calling mode.

The measurement shall not include undesired properties from the WD's RF field.

Section 6.1 describes recommended test facilities and equipment, including probe coils and test equipment.
Section 6.2 describes test configuration and setup.
Section 6.3 describes measurement procedure for T-Coil fields.
Section 6.4 describes alternate measurement procedures using a broadband signal source.
Annexes include additional information as outlined.

6.1 Test facilities and equipment

Deleted: Facilities
Deleted: Equipment

See Annex C and D for test facility requirements.

6.1.1 Test equipment

Deleted: Equipment

6.1.1.1 Foundational test equipment

Deleted: T
Deleted: Equipment

The following test equipment, or equivalent instruments, is required to perform this test. Test equipment used shall meet the applicable specifications of Annex D.

1. Audio Signal Source or Frequency Generator
2. 1/3 Octave Bandpass Filter
3. A Weighting Bandpass Filter
4. Probe Coil assembly
5. Helmholtz Calibration Coils
6. True RMS Voltmeter
7. Base Station Simulator / RF Communications Test Set with audio input/output or non-radiating load

6.1.1.2 Additional test equipment

Deleted: T
Deleted: E

The following equipment may be required.

1. Anechoic or Shielded Chamber (Magnetic)
2. Graphics Recorder
3. Optional Controller
4. Power Supply
5. Test Interface Adapter (TIA)

6.2 Test configurations and setup

Deleted: C
Deleted: S

Figure 6-1and Figure 6-2 illustrate the basic test configurations for magnetic field measurements.

DRAFT
Copyright © 2006 IEEE. All rights reserved.
This is a draft, subject to change until final approval by ANSI and publication.

Copyright The Institute of Electrical and Electronics Engineers, Inc.
Provided by IHS under license with IEEE
No reproduction or networking permitted without license from IHS
Not for Resale

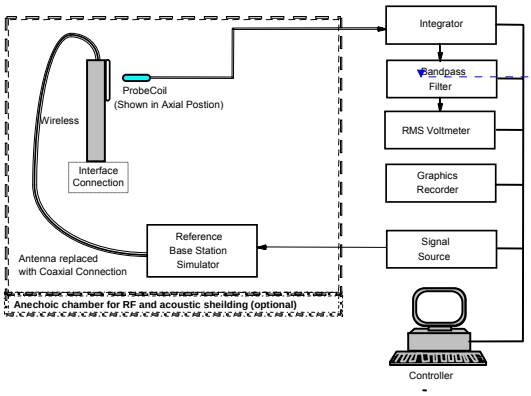

Deleted: 1/3 Octave

Figure 6-1 - Magnetic field measurement test setup – in call method

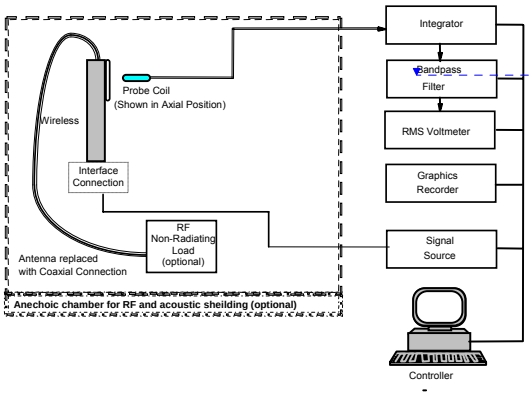

Deleted: 1/3 Octave

Formatted: Centered

Figure 6-2 - Magnetic field measurement test setup – test mode method

Note that the setup assumes that the proper reference input level to the base station simulator or phone interface as defined in Section 6.3.2.1 has already been determined.

The receive audio signal for the WD may be injected into the base station simulator, which transmits it to the WD while the WD is on a call. An alternate method is to use the WD manufacturer's test mode, if available. If a manufacturer's test mode is used, it is up to the tester to show that the signal is equivalent to the reference input level into a base station simulator as defined in Section 6.3.2.1.

DRAFT
Copyright © 2006 IEEE. All rights reserved.
This is a draft, subject to change until final approval by ANSI and publication.

Copyright The Institute of Electrical and Electronics Engineers, Inc.
Provided by IHS under license with IEEE
No reproduction or networking permitted without license from IHS
Not for Resale

6.2.1 Ambient and test system noise

It is necessary that the magnetic and RF ambient levels be low enough as to not significantly affect the intended measurement. In order to achieve these levels magnetic and RF shielding may be required. In some cases, a full RF shielded chamber may be required to accurately perform the intended measurements.

Care shall be taken to ensure that measured field strengths due to noise in the test system or from the environment should be at least 10 dB below the limit specified in Section 7.3. For the measurement of ABM1, this criterion applies in each 1/3 octave band over the specified voiceband. For the measurement of ABM2, this criterion applies over the full measurement bandwidth. Satisfaction of the criterion may be confirmed by placing the probe and receiver in the position to be used for WD field strength measurements. Remove the WD and measure the remaining noise field strength in the same way and over the same frequency range used for WD measurements.

6.2.2 Base station simulator method

A base station simulator, as shown in test setup Figure 6-1, allows the WD to be in its conversation mode. It is required that the base station simulator provide the complementary audio signal processing to the WD. Through the base station simulator, command the WD to transmit at maximum RF power. (NOTE: The WD is set to transmit at maximum RF power to ensure that associated baseband effects such as battery surge currents are accounted for. However, the WD antenna is replaced by a coax so as to mask the effects of the RF transmission signal from the measurement.) Set the base station simulator to provide a low-level RF signal, approximately -50 dBm, using a frequency near the center of the frequency band. Inject a P.50 artificial speech signal, or similar speech signal in accordance with 6.3.2, for the digital mode[40]. The test operator is cautioned about using a sine wave for digital modes and is referred to IEEE 269-2002 for additional information.

6.2.3 Manufacturer's test mode method

The WD can be placed in test mode. This is normally done through the interface connection shown with the line in the test setup, Figure 6-2. The base station simulator may be replaced by an optional non-radiating RF load to allow the WD to transmit at maximum RF power without interfering with the measurement instrumentation. In test mode, provide an audio input by injecting the signal into the system connector and redirecting it to the earphone through the electrical sidetone path or other electrical loopback path. An alternate method is to inject a PCM coded signal into the virtual digital interface also referred to as the Digital Audio Interface (DAI).

It is considered the responsibility of each WD manufacturer to fulfill and verify the specification points. Some advantages to the test mode method are that the base station simulator is not needed and the digital

voice coder might be bypassed so a sine wave signal can be used. The WD RF is set to a channel near the center of the frequency band and the RF power is set to its maximum.

6.2.4 Calibration of the probe coil

Specifications and the required response curves for the probe coil are contained in Section C.5. If the probe coil is not in compliance with Section C.5 and D.8, then information similar to that contained in the annexes should be provided to fully justify use of the probe and to explain the linearity compensation utilized and identify the probe model number.

6.3 Test procedure for T-Coil signal

This section describes the procedures used to measure the audio band magnetic (T-Coil) performance of the WD. In addition to measuring the absolute signal levels, the A-weighted magnitude of the unintended signal shall also be determined. In order to assure that the required signal quality is measured, the measurement of the intended signal and the measurement of the unintended signal must be made at the same location for all measurement positions. In

[40] See Section 6.3.4.1 for further details.

DRAFT
Copyright © 2006 IEEE. All rights reserved.
This is a draft, subject to change until final approval by ANSI and publication.

--`,,```,,,,````-`-`,,`,,`,`,,`---

Copyright The Institute of Electrical and Electronics Engineers, Inc.
Provided by IHS under license with IEEE
No reproduction or networking permitted without license from IHS
Not for Resale

addition, the RF field strength at each measurement location must be at or below that required for the assigned category.

Measurements shall not include undesired properties from the WD's RF field; therefore, use of a coaxial connection to a Base Station Simulator or non-radiating load may be necessary. However, even then with a coaxial connection to a Base Station Simulator or non-radiating load there may still be RF leakage from the WD, which may interfere with the desired measurement. Pre-measurement checks should be made to avoid this possibility. All measurements shall be done with the WD operating on battery power with an appropriate Normal Speech audio signal input level given in Table 6-1. If the device display can be turned off during a phone call then that may be done during the measurement as well.

Measurements shall be performed at all three locations, with the correct probe orientation for a particular location, in a multi-stage sequence by first measuring the field intensity of the desired T-Coil signal (ABM1) that is useful to a hearing aid T-Coil. The undesired magnetic components (ABM2) shall be examined for each probe orientation to determine possible effects from the WD display and battery current paths that may disrupt the desired T-Coil signal. The undesired magnetic signal (ABM2) must be measured at the same location as the measurement of the desired audio band magnetic (ABM) or T-Coil signal (ABM1) and the ratio of desired to undesired ABM signals calculated. For the axial field location only the ABM1 frequency response shall be determined in a third measurement stage. The flow chart in Figure 6-3 illustrates this three-stage, three orientation-process.

DRAFT

Copyright © 2006 IEEE. All rights reserved.

This is a draft, subject to change until final approval by ANSI and publication.

--`,,```,,,,````-`-`,,`,,`,`,,`---

Copyright The Institute of Electrical and Electronics Engineers, Inc.
Provided by IHS under license with IEEE
No reproduction or networking permitted without license from IHS

Not for Resale

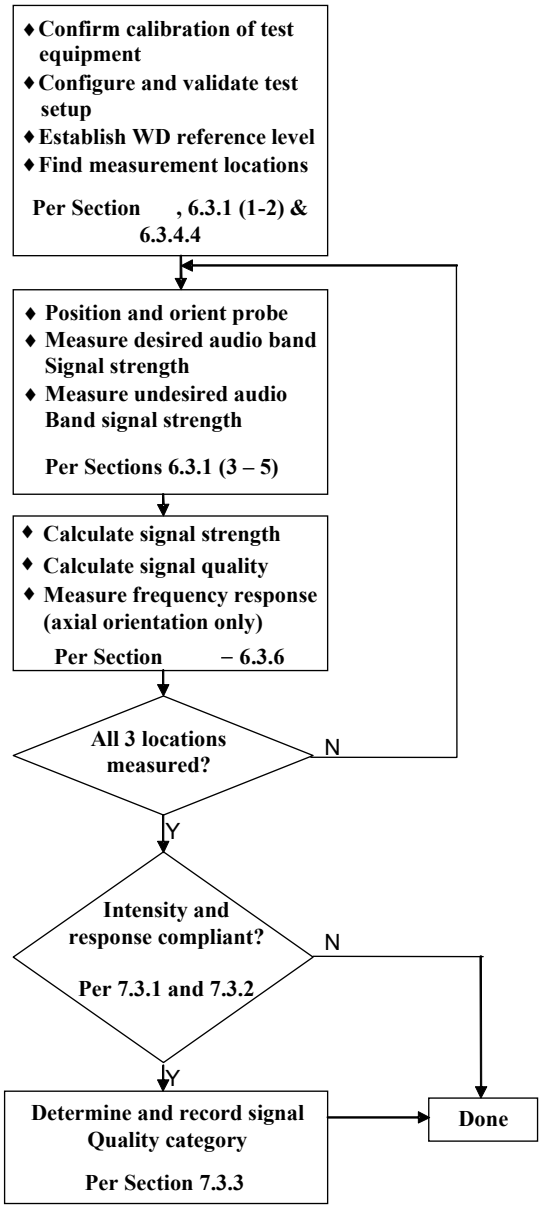

Figure 6-3 - WD T-Coil signal test flowchart

DRAFT
Copyright © 2006 IEEE. All rights reserved.
This is a draft, subject to change until final approval by ANSI and publication.

Copyright The Institute of Electrical and Electronics Engineers, Inc.
Provided by IHS under license with IEEE
No reproduction or networking permitted without license from IHS
Not for Resale

6.3.1 Test flow for T-Coil signal test

The following summarizes the basic test flow:

1. Position the WD in the test setup and connect the WD RF connector to a base station simulator or a non-radiating load as shown in Figure 6-1 or Figure 6-2. Confirm that equipment that requires calibration has been calibrated, and that the noise level meets the requirements given in Section 6.2.1.

2. Set the reference drive level for the system with the maximum volume control setting or as specified by the manufacture. The drive level is set such that the reference input level defined in Section 6.3.2.1 is input to the base station simulator (or manufacturer's test mode equivalent) in the 1 kHz, 1/3 octave band. This drive level shall be used for the T-Coil signal test (ABM1 at ***f***). Either a sine wave at 1025 Hz or a voice-like signal as defined in Section 6.3.2 shall be used for the reference audio signal. If interference is found at 1025 Hz an alternate reference audio signal frequency may be used.[41] The same drive level will be used for the ABM1 frequency response measurements at each 1/3 octave band center frequency.

3. Determine the magnetic measurement locations for the WD device (see Section A.3), if not already specified by the manufacturer, as described in Sections 6.3.4.1.1 and 6.3.4.4.

4. At each measurement location measure and record the desired T-Coil magnetic signals (ABM1 at f_i) as described in Section 6.3.4.2 in each individual ISO 266 R10 standard 1/3 octave band. The desired audio band input frequency (f_i) shall be centered in each 1/3 octave band maintaining the same drive level as determined in step 2 and the reading taken for that band.[42]

   Equivalent methods of determining the frequency response may also be employed, such as FFT analysis using noise excitation or input/output comparison using simulated speech. The full-band integrated or half-band integrated probe output, as described in Section D.18, may be used, as long as the appropriate calibration curve is applied to the measured result, so as to yield an accurate measurement of the field magnitude. (The resulting measurement shall be an accurate measurement in dB A/m.)

   All measurements of the desired signal shall be shown to be of the desired signal and not of an undesired signal. This may be shown by turning the desired signal on and off with the probe measuring the same location. If the scanning method is used the scans shall show that all measurement points selected for the ABM1 measurement meet the ambient and test system noise criterion in Section 6.2.1.

5. At each measurement location measure and record the undesired broadband audio magnetic signal (ABM2) as described in Section 6.3.4.3 with no audio signal applied (or digital zero applied, if appropriate) using A-weighting, and the half-band integrator. Calculate the ratio of the desired to undesired signal strength (i.e. signal quality).

6. Change the probe orientation to one of the two remaining orientations. At both measurement orientations measure and record ABM1 using either a sine wave at 1025 Hz or a voice-like signal as defined in Section 6.3.2 for the reference audio input signal.

7. Determine the category which properly classifies the signal quality based on Table 7-7.

To assure that the desired signal quality is provided, the RF field intensity at this measurement point must be at or below that required for the assigned category. If the RF field intensity measurement at the location of the axial

[41] The 1025 frequency was selected rather than 1 kHz because a 1 kHz reference frequency may interfere with emission harmonics or test equipment fundamental frequencies.

[42] See Section 6.3.4.2 and 6.3.4.3 for details

DRAFT
Copyright © 2006 IEEE. All rights reserved.
This is a draft, subject to change until final approval by ANSI and publication.

Copyright The Institute of Electrical and Electronics Engineers, Inc.
Provided by IHS under license with IEEE
No reproduction or networking permitted without license from IHS
Not for Resale

measurement of the desired signal (ABM1) was not recorded in the 5 x 5 cm scan taken per Section 4, then measure the RF field intensity at this location. The RF field intensity at this location shall be at or below that required by the assigned category.

Deleted: S

6.3.2 Test signals

It is generally simpler and therefore preferred to use pure tone or sine wave test signals for audio band tests. However, accurate results may not be possible with some voice coders using simple sine wave signals. Such devices may require the use of voice-like signals such as real voice or artificial voice, as described in ITU recommendation P.50 (P.50 voice). Such signals may have frequency weighting and temporal characteristics that require additional processing to correlate with sine wave based test methods. It is up to the test operator to ensure that non-sinusoidal test signals are properly implemented.

Deleted: I

Deleted: L

6.3.2.1 Reference input level

The following reference input levels that correlate to a normal speech input level shall be used for the standard transmission protocols:[43]

Standard	Technology	Input (dBm0)
TIA/EIA/IS 2000	CDMA	-18
TIA/EIA-136	TDMA (50 Hz)	-18
J-STD-007	GSM (217)	-16

[43] The intent of this section is to provide a nominal level speech input independent of air interface and measure the magnetic response in a normal use condition without requiring an acoustic reference. The nominal level speech signals in Section 6.3.2.1 will result in acoustic speech levels that are mutually consistent and also span a range including 94 dB SPL, as shown in the examples below. This is intended to allow the operator to set WD adjustable volume controls as needed to produce a sufficient desired magnetic level (ABM1) based on intended usage.

When measuring with the specified nominal speech input level of -16 dBm0 for GSM, a GSM phone shall not exceed a Receive Loudness Rating (RLR) of -13 dB at maximum volume setting. However at a nominal volume control setting with the same -16 dBm0 input, a GSM phone shall have an RLR of at least 2 ±3dB. An RLR of 2 ±3dB corresponds to a sound pressure level of 84 ±3dB SPL, assuming an earpiece frequency response that is flat over the frequency bands specified as per ITU-T Recommendation P.79. An RLR of -13 dB corresponds to a sound pressure level of 99 dB SPL, assuming an earpiece frequency response that is flat over the frequency bands specified as per ITU-T Recommendation P.79.

When measuring with the specified nominal speech input level of -18 dBm0 for CDMA, a CDMA phone with volume control set to the midpoint should provide an RLR of 2 ±5dB. The CTIA CDMA test plan (V1.2) does not specifically place an upper limit on RLR.

References:

ITU-T Recommendation P.79. Calculation of loudness ratings for telephone handsets.

Cellular Telecommunications Industry Association Performance Evaluation Standard for 800 MHz AMPS and Cellular/PCS CDMA Dual Mode Wireless Subscriber Stations.

DRAFT
Copyright © 2006 IEEE. All rights reserved.
This is a draft, subject to change until final approval by ANSI and publication.

--`,,```,,,,````-`-`,,`,,`,`,,`---

Copyright The Institute of Electrical and Electronics Engineers, Inc.
Provided by IHS under license with IEEE
No reproduction or networking permitted without license from IHS Not for Resale

T1/T1P1/3GPP [44]	UMTS (WCDMA)	-16
iDEN™	TDMA (22 and 11 Hz)	-18

Table 6-1 – Normal speech input levels

Deleted: 6-1

For systems not listed in the above table, use the normal speech input level as defined in the relevant specifications for that air interface.

6.3.3 Measurement of source magnitude

Deleted: S
Deleted: M

All measurements in this section shall use the probe-coil-voltage to Ampere-per-meter conversion process outlined in IEEE 1027-1996. Relevant portions are included in Annex C of this document. For the measurement of ABM2 in Section 6.3.4.3, a T-Coil response spectral weighting (as also described in Section C.5) is employed with the probe-coil-voltage to Ampere-per-meter conversion applied at 1 kHz.

6.3.4 Measurement of source magnitude and direction

Deleted: S
Deleted: M
Deleted: D
Deleted: R
Deleted: A

6.3.4.1 Setup of receiver assembly

Adjust the input signal until the reference input level defined in 6.3.2.1 is measured at the base station simulator input with a 1 kHz, 1/3 octave band filter.

A 1025 Hz ± 10 Hz signal is recommended for sine test signals for the signal quality measurements. For voice-like test signals, such as ITU P-50 artificial speech, the speech should be band-limited to the 1/3 octave centered at 1025 Hz and the level set to the reference input level defined in 6.3.2.1. (Note that this is not the same as setting the artificial speech level to the reference input level using the entire signal bandwidth.) The voltage required to produce this level (in dBm0) in the 1025 Hz band should be maintained for T-Coil signal measurements at all frequencies for the frequency response measurement.

6.3.4.1.1 Auxiliary induction sources

Deleted: I
Deleted: S

To increase durability and battery life and to decrease component weight; a WD manufacturer may elect to incorporate an induction coil in addition to a non-inductive speaker assembly (e.g., piezo-electric). The location of the induction source shall be consistent with providing the required T-Coil signal in typical use as held to the head The probe coil, in the axial orientation, shall be used to establish the reference axis for such assemblies.

Measurements of the T-Coil signal as described in Section 6.3.4.2 are performed using the auxiliary induction source reference axis. The location may be obtained from the WD manufacturer or found by scanning with the probe coil.

6.3.4.2 Desired plus undesired T-Coil signal measurement

Deleted: P
Deleted: U
Deleted: S
Deleted: M

Measure the T-Coil signal at each of the magnetic measurement positions as determined in Section 6.3.4.4. These measurements are made over the frequency range of 300 to 3000 Hz either in 1/3 octave bands centered at the ISO 266 R10 series of standard test frequencies or using a broadband signal that is subsequently analyzed for frequency content. All results should be reported in dB (A/m). Magnetic output data shall be corrected if any frequency weighting of the input test signal is used.

If the audio band undesired noise is less than 10 dB below the T-Coil desired signal, Mu-metal shielding of the WD's display and keypad area and an external DC power source that replaces the WD's normal battery (to minimize paths of battery current) is allowed in order to establish the desired T-Coil source.

[44] For UMTS refer to 3GPP TS26.131 and TS26.132 (http://www.3gpp.org).

DRAFT
Copyright © 2006 IEEE. All rights reserved.
This is a draft, subject to change until final approval by ANSI and publication.

Copyright The Institute of Electrical and Electronics Engineers, Inc.
Provided by IHS under license with IEEE
No reproduction or networking permitted without license from IHS
Not for Resale

6.3.4.3 Undesired audio band magnetic signal measurement

Turn off the audio test signal to base station simulator (or send a digital zero code if possible).

Measure the T-Coil signal at each measurement position specified in Section A.3. The measurement shall be made using an A-weighted filter, applied to the half-band integrated probe coil signal (T-Coil response), as described in Section D.18.2. The result is the 1 kHz equivalent value of the A-weighted T-Coil response magnetic noise. All results should be reported in dB (A/m). Magnetic field intensity data shall be corrected if any frequency weighting of the input test signal is used.

As noted in Section 6.3.4.2, undesired signal measurements shall be made in exactly the same probe positions as the desired signal measurements. Most accurate results are obtained by use of a fixture, robotic movement or by measuring the noise immediately after the signal measurement for each of the probe positions.

Undesired signal measurements shall be made with the batteries in place and without any external shielding of the WD.

6.3.4.4 Probe coil position and orientation

Generally the probe orientation is either axial (probe coil axis is parallel to the receiver earcap axis) or radial (probe coil axis is perpendicular to the receiver earcap axis). The position and orientation of the probe coil used should be stated for all measurements.

Figure A-5 illustrates the three standard probe orientations. The center of the earpiece holes or slots marks the reference axis unless an auxiliary reference axis is used or the manufacturer specifies otherwise. These locations can also be found by scanning with a properly oriented probe coil. Scanning increments of 5 mm or less (see Figure E-1) is recommended to minimize measurement uncertainty.

Care shall be taken to ensure that the probe is not moved between the desired T-Coil signal measurement and the undesired T-Coil signal measurement steps for each test position of the probe. In other words, the desired signal measurement shall be followed by the undesired signal measurement in order to maintain identical probe position for both tests.[45]

6.3.5 Calculation of signal quality

Upon completion of measuring the desired T-Coil signal (Primary ABM1) and the undesired magnetic field (Secondary ABM2), the signal quality shall be calculated and used to determine the applicable category, per Section 7. The signal quality shall be calculated for each measurement position. The signal quality for a given measurement position is the difference, in dB, between the value of ABM1 in the 1kHz 1/3 octave band and ABM2.

6.3.6 Magnetic field frequency response measurement

The axial magnetic field strength shall be measured over the audio frequency band and in particular recorded for the frequency range given in Section 7.3.2, at the frequencies listed in Annex B. The result is reported in dB relative to one ampere per meter, dB (A/m).

6.4 Broadband test procedure - alternate

This section describes an alternate test procedure that uses a broadband audio signal. This alternate procedure may be used to measure the audio band magnetic performance of the WD. In case of dispute the method of Section 6.3 shall take precedence.

6.4.1 Test procedure for broadband test[46]

The following summarizes the basic test flow:

[45] See Section 7.3.1 for detailed instructions on processing measured data to determine the classification.
[46] See IEEE Std. 269 for additional guidance on broadband test methodology.

DRAFT
Copyright © 2006 IEEE. All rights reserved.
This is a draft, subject to change until final approval by ANSI and publication.

Copyright The Institute of Electrical and Electronics Engineers, Inc.
Provided by IHS under license with IEEE
No reproduction or networking permitted without license from IHS
Not for Resale

1) Confirm that equipment that requires calibration has a current calibration.

2) Set up the WD to output a broadband signal, such as the ITU recommendation P.50 artificial voice signal referenced in Section 6.3.2.

3) Determine the acoustic reference point for the WD device. Set the drive level so that the handset produces a broadband signal that is within the normal acoustic output range of the WD. Set the drive level per Section 6.3.2.1

4) Measure the audio power spectral density of the broadband signal input to the WD. Perform a frequency domain analysis, such as a Fast Fourier Transform, of the broadband signal and record the level at each frequency in the corresponding 1/3 octave BW in the frequency range specified in Section 7.3.2. If the input signal cannot be measured directly, other means to determine the frequency response may be used such as calculation from a digital input or extrapolation from a measurement of the acoustic output. However, these steps must be fully justified.

5) Orient the magnetic probe in the axial orientation.

6) Locate the desired axial measurement position as shown in the figure in Section A-3. It has proven helpful to perform a field map of the T-Coil signal not only to locate the best position for the measurement but also to provide insight into the size and shape of the T-Coil signal.

7) Measure desired plus undesired audio band magnetic signals, ABM1. Perform a frequency domain analysis, over the frequency range given in Section 7.3.2, such as a Fast Fourier Transform, of the broadband magnetic signal as represented by the integrated probe coil output and record the level in dB (A/m) for each 1/3 octave frequency band.

8) Turn off the audio reference input signal and measure the undesired audio band magnetic signal, ABM2.

9) Repeat steps 6) through 8) for each of the radial positions.

10) Correct the reading for the spectrum of the broadband input by subtracting the input signal spectrum, found in step 4, from the magnetic field spectrum, found in step 7. (Delta T-Coil to Input dB = Measured T-Coil Signal - Measured Input Signal). Record results for use in the T-Coil assessment of the signal magnitude and signal quality at each probe orientation.

6.4.2 Calculation of signal magnitude

Deleted: S

Deleted: M

For each orientation, calculate the 1 kHz sensitivity for the input signal by adding the appropriate reference level from Section 6.3.2.1 in dB to the 1 kHz band sensitivity found in step 10 of Section 6.4.1. Compare the normalized readings to the requirements of Section 7.3.1.1 for the axial reading and Section 7.3.1.2 for the radial readings.

6.4.3 Calculation of frequency response

Deleted: F

Deleted: R

Normalize the frequency response to 0 dB at the 1 kHz band by subtracting the 1 kHz band sensitivity found in Section 6.3.4.2 from all the band sensitivities. Compare the results to the frequency response requirements of Section 7.3.2.

6.4.4 Calculation of signal quality

Deleted: S

Deleted: Q

Calculate the difference between the intended and undesired magnetic field at 1 kHz for each measurement position. If the WD passes both the signal magnitude at each of the measurement positions and frequency response

DRAFT
Copyright © 2006 IEEE. All rights reserved.
This is a draft, subject to change until final approval by ANSI and publication.

Copyright The Institute of Electrical and Electronics Engineers, Inc.
Provided by IHS under license with IEEE
No reproduction or networking permitted without license from IHS
Not for Resale

requirements, compare the results to the requirements of Section 7.3.3 and determine the category of the WD based upon the lowest of the (S+N)/N measurements. If the WD fails either the signal magnitude or frequency response, it fails the T-Coil signal requirements of this standard and cannot be categorized for T-Coil use.

DRAFT

Copyright © 2006 IEEE. All rights reserved.

This is a draft, subject to change until final approval by ANSI and publication.

-`,,```,,,,````-`-`,,`,,`,`,,`---

Copyright The Institute of Electrical and Electronics Engineers, Inc.
Provided by IHS under license with IEEE
No reproduction or networking permitted without license from IHS Not for Resale

7. Performance

This section provides the requirements that allow classification of the combination of hearing aid and WD for acceptable performance under standardized conditions. When the tests described in this standard are performed and the results categorized according to Table 7-2 through Table 7-5, the hearing aid and WD combination should perform according to the system classification in Table 7-6.

Information from the system classification per Table 7-6 is the ultimate result of this standard and describes general compatibility and usability of the combination of a particular hearing aid and WD. Following the testing described in Clause 4 through Clause 6, the equipment performance is categorized. Category sums of less than 4 indicate an incompatible combination of hearing aid and WD that is likely not useable by most hearing aid wearers. A category sum of 4 or more is considered "useable". Category sums of 5 are considered to result in "normal use" of the aid and WD, and sums of 6 or more considered as "excellent performance".

7.1 Articulation weighting factor (AWF)

The following AWF factors shall be used for the standard transmission protocols[47]:

Standard	Technology	AWF (dB)
TIA/EIA/IS-2000	CDMA	0
TIA/EIA-136	TDMA (50 Hz)	0
J-STD-007	GSM (217)	-5
T1/T1P1/3GPP	UMTS (WCDMA)	0
iDEN™	TDMA (22 and 11 Hz)	0

Table 7-1 Articulation weighting factor (AWF)

Deleted: 7-1

7.2 Audio coupling mode

Deleted: C

Deleted: M

Research studies show that an audio signal-to-interference ratio of 20 dB provides a signal quality that is acceptable for normal operation. An improvement of the signal-to-interference ratio of 10 dB, to 30 dB, improves performance to the level where there is little perception of interference. At a signal-to-interference ratio of 30 dB, 90% of hearing aid users find the WD highly usable.[48] Alternately, a reduction of the signal-to-interference ratio of 10 dB, to 10 dB, degrades the performance to that which would generally be judged to be useable but not acceptable for regular use.

In addition to immunity and emission requirements, hearing aid response performance, as measured by gain, can be adversely affected by WD RF interference. The criterion established in this section sets the requirement for achieving these levels and gain requirements.[49]

---

[47] The AWF to be used in Table 7-1 was determined by consensus of the committee using information presented to the committee (see [B27] and other studies) regarding the interference potential of the various modulation types. New modulations should be submitted to the ANSI ASC C63 to determine its AWF, until such time as a standard method for determining the AWF of new waveforms is developed.

[48] The figure of 90% is based upon data reported by Levitt, H., et al [B22].

Deleted: Kozma-Spytek, L. and Harkins, J., In-the-Ear Measurements of Interference in Hearing Aids from Digital Wireless Telephones, Seminars in Hearing, **26(2)**, 87-98, 2005

[49] The values in Table 7-2 through Table 7-5 are built on a set of premises, which are documented here.

- First, 80 dB SPL is assumed as the level of the intended audio input signal.
- Secondly, the values given are for an equivalent CW signal. Thus for hearing aid immunity testing a CW signal is used to establish a field at the specified RF power level. Then the signal is modulated with 1 kHz, 80% AM for the test. Thus the peak field strength for the test is higher than the CW level by the increase created by the modulation. In a reciprocal fashion, the field strength of the emissions from the WD are

DRAFT
Copyright © 2006 IEEE. All rights reserved.
This is a draft, subject to change until final approval by ANSI and publication.

--`,,```,,,,````-`-`,,`,,`,`,,`---

Copyright The Institute of Electrical and Electronics Engineers, Inc.
Provided by IHS under license with IEEE
No reproduction or networking permitted without license from IHS
Not for Resale

Equipment that is categorized according to these requirements shall be coordinated according to Table 7-2 to Table 7-5.[50]

Where a value is contained in two categories, the stricter limit applies.

Category	Hearing aid RF parameters (hearing aid must maintain < 55 dB IRIL interference level and < 6 dB gain compression)			
Near field	E-field immunity (CW)		H-field immunity (CW)	
Category M1/T1	31.6 to 56.2	V/m	0.071 to 0.126	A/m
Category M2/T2	56.2 to 100.0	V/m	0.126 to 0.224	A/m
Category M3/T3	100.0 to 177.8	V/m	0.224 to 0.398	A/m
Category M4/T4	>177.8	V/m	>0.398	A/m

Table 7-2 – Hearing aid near-field categories in linear units

Deleted: 7-2

measured. These are then adjusted by the computed AWF, which reflects the interference potential of the modulation method used. The adjusted value is compared to the value given in Table 7-2 through Table 7-5.

- Finally, the hearing aid gain deviation is a measurement of the gain response change of the hearing aid when exposed to the E and H-Fields created by the dipole.
- The category levels represent available volume control adjustment. For instance, if the volume control requires 4 to 6 dB of adjustment to use the WD, it is considered within the residual reserve gain of the hearing aid but may become a problem during normal use and therefore is considered useable but not acceptable for regular use.

[50] A recent study showed that most contemporary hearing aids have more immunity in bands below 960 MHz than above, and this led to a review of current hearing aid standards. When combined with the difference in device power this band-dependent characteristic is reflected as band-dependent limits in international standard IEC 60118.13 for hearing instrument immunity. Consideration of these findings led to a revision in C63.19-2005 of the wireless device limits in Table 7-4 and Table 7-5.

Formatted: Font color: Auto, Check spelling and grammar

Deleted: -2005

DRAFT
Copyright © 2006 IEEE. All rights reserved.
This is a draft, subject to change until final approval by ANSI and publication.

--`,,```,,,,````-`-`,,`,,`,`,,`---

Copyright The Institute of Electrical and Electronics Engineers, Inc.
Provided by IHS under license with IEEE
No reproduction or networking permitted without license from IHS Not for Resale

Category	Hearing aid RF parameters (hearing aid must maintain < 55 dB IRIL interference level and < 6 dB gain compression)			
Near field	E-field immunity (CW)		H-field immunity (CW)	
Category M1/T1	30.0 to 35.0	dB (V/m)	-23.0 to -18.0	dB (A/m)
Category M2/T2	35.0 to 40.0	dB (V/m)	-18.0 to -13.0	dB (A/m)
Category M3/T3	40.0 to 45.0	dB (V/m)	-13.0 to -8.0	dB (A/m)
Category M4/T4	>45.0	dB (V/m)	>-8.0	dB (A/m)

Deleted: 7-3

Table 7-3 – Hearing aid near-field categories in logarithmic units

Category	Telephone RF Parameters < 960 MHz				
Near Field	AWF	E-Field Emissions		H-Field Emissions	
Category M1/T1	0	631.0 to 1122.0	V/m	1.91 to 3.39	A/m
	-5	473.2 to 841.4	V/m	1.43 to 2.54	A/m
Category M2/T2	0	354.8 to 631.0	V/m	1.07 to 1.91	A/m
	-5	266.1 to 473.2	V/m	0.80 to 1.43	A/m
Category M3/T3	0	199.5 to 354.8	V/m	0.60 to 1.07	A/m
	-5	149.6 to 266.1	V/m	0.45 to 0.80	A/m
Category M4/T4	0	< 199.5	V/m	< 0.60	A/m
	-5	< 149.6	V/m	< 0.45	A/m

Category	Telephone RF Parameters > 960 MHz				
Near Field	AWF	E-Field Emissions		H-Field Emissions	
Category M1/T1	0	199.5 to 354.8	V/m	0.60 to 1.07	A/m
	-5	149.6 to 266.1	V/m	0.45 to 0.80	A/m
Category M2/T2	0	112.2 to 199.5	V/m	0.34 to 0.60	A/m
	-5	84.1 to 149.6	V/m	0.25 to 0.45	A/m
Category M3/T3	0	63.1 to 112.2	V/m	0.19 to 0.34	A/m
	-5	47.3 to 84.1	V/m	0.14 to 0.25	A/m
Category M4/T4	0	<63.1	V/m	<0.19	A/m
	-5	<47.3	V/m	<0.14	A/m

DRAFT
Copyright © 2006 IEEE. All rights reserved.
This is a draft, subject to change until final approval by ANSI and publication.

Copyright The Institute of Electrical and Electronics Engineers, Inc.
Provided by IHS under license with IEEE
No reproduction or networking permitted without license from IHS
Not for Resale

Deleted: 7-4

Table 7-4 - Telephone near-field categories in linear units

Category	Telephone RF Parameters < 960 MHz				
Near Field	AWF	E-Field Emissions		H-Field Emissions	
Category M1/T1	0	56 to 61	dB (V/m)	+5.6 to +10.6	dB (A/m)
	-5	53.5 to 58.5	dB (V/m)	+3.1 to +8.1	dB (A/m)
Category M2/T2	0	51 to 56	dB (V/m)	+0.6 to +5.6	dB (A/m)
	-5	48.5 to 53.5	dB (V/m)	-1.9 to +3.1	dB (A/m)
Category M3/T3	0	46 to 51	dB (V/m)	-4.4 to +0.6	dB (A/m)
	-5	43.5 to 48.5	dB (V/m)	-6.9 to -1.9	dB (A/m)
Category M4/T4	0	< 46	dB (V/m)	< -4.4	dB (A/m)
	-5	< 43.5	dB (V/m)	< -6.9	dB (A/m)

Category	Telephone RF Parameters > 960 MHz				
Near Field	AWF	E-Field Emissions		H-Field Emissions	
Category M1/T1	0	46 to 51	dB (V/m)	-4.4 to 0.6	dB (A/m)
	-5	43.5 to 48.5	dB (V/m)	-6.9 to -1.9	dB (A/m)
Category M2/T2	0	41 to 46	dB (V/m)	-9.4 to -4.4	dB (A/m)
	-5	38.5 to 43.5	dB (V/m)	-11.9 to -6.9	dB (A/m)
Category M3/T3	0	36 to 41	dB (V/m)	-14.4 to -9.4	dB (A/m)
	-5	33.5 to 38.5	dB (V/m)	-16.9 to -11.9	dB (A/m)
Category M4/T4	0	<36	dB (V/m)	<-14.4	dB (A/m)
	-5	<33.5	dB (V/m)	<-16.9	dB (A/m)

DRAFT
Copyright © 2006 IEEE. All rights reserved.
This is a draft, subject to change until final approval by ANSI and publication.

--`,,```,,,,````-`-`,,`,,`,`,,`---

Copyright The Institute of Electrical and Electronics Engineers, Inc.
Provided by IHS under license with IEEE
No reproduction or networking permitted without license from IHS
Not for Resale

Deleted: 7-5

Table 7-5 - Telephone near-field categories in logarithmic units

NOTE: It should be noted that because the common interference response of hearing aid circuitry is proportional to the square of the RF field, a 5 dB change in the RF yields a 10 dB change in the interference level.

To determine the compatibility of a WD and a particular hearing aid simply add the numerical part of the hearing aid category (e.g., M2/T2 = 2) with the numerical part of the WD emission rating (e.g., M3 = 3) to arrive at the system classification for this particular combination of WD and hearing aid. A sum of 4 would indicate that the combination of WD and hearing aid is usable; a sum of 5 would indicate that the WD and hearing aid would provide normal use; and a sum of 6 or greater would indicate that the WD and hearing aid would provide excellent performance. A category sum of less than 4 would likely result in a performance that is judged unacceptable by the hearing aid user. The system classification for a combination of hearing aid and WD is based upon a study of hearing aid users and includes objective measures of speech intelligibility and subjective judgments of announce and other factors. The equipment performance measurements, categories, and system classifications are based upon the best information available but cannot guarantee that all users will be satisfied.

System classification		
System classification	Articulation index	Category sum
	AI	Sum of hearing aid category + telephone category
Usable	0.3	Hearing aid category + telephone category = 4
Normal use	0.5	Hearing aid category + telephone category = 5
Excellent performance	0.7	Hearing aid category + telephone category ≥ 6

Deleted: 7-6

Table 7-6 - System performance classification table

DRAFT
Copyright © 2006 IEEE. All rights reserved.
This is a draft, subject to change until final approval by ANSI and publication.

--`,,```,,,,````-`-`,,`,,`,`,,`---

Copyright The Institute of Electrical and Electronics Engineers, Inc.
Provided by IHS under license with IEEE
No reproduction or networking permitted without license from IHS
Not for Resale

7.3 T-Coil coupling mode

In order to be rated for ~~T-coil use a WD shall meet the requirements for signal level and signal quality contained in~~ this section.[51]

Deleted: C
Deleted: M

7.3.1 T-Coil coupling field intensity

Deleted: C
Deleted: F
Deleted: I

The T-Coil signal from the WD, when measured as specified in this standard, shall meet the parameters set forth below for the axial field intensity and the radial field intensities. These measurements shall be made with the WD operating at a reference input level as defined in 6.3.2.1.

These levels are designed to be compatible with hearing aids that produce the same acoustic output level for either an acoustic input level of 65 dB SPL or a magnetic input level of –25 dB (A/m) (56.2 mA/m)[52] at either 1.0 or 1.6 kHz. The hearing aid operational measurements are performed per ANSI S3.22.

7.3.1.1 Axial field intensity

Deleted: F
Deleted: I

The axial component of the magnetic field, directed along the measurement axis and located at the measurement plane, shall be ≥ -13 dB (A/m) at 1 kHz, in 1/3 octave band filter.

7.3.1.2 Radial field intensity

Deleted: F
Deleted: I

The radial components of the magnetic field, as measured at the radial measurement points described in Section A.3[53], shall be ≥ -18 dB (A/m) at 1 kHz, in 1/3 octave band filter.

7.3.2 Frequency response

Deleted: R

The frequency response of the axial component of the magnetic field, measured in 1/3 octave bands, shall follow the response curve specified in this section, over the frequency range 300-3000 Hz. These response curves are for true field strength measurements of the T-Coil signal. Thus the 6 dB/octave probe response has been corrected from the raw readings.

[51] These categories are based on the signal-to-interference categories defined for audio coupling mode. However, in the T-Coil coupling mode there are two interference sources, RF interference and audio band, magnetic interference. Accordingly the target signal-to-interference ratio needs to account for interference by the combined total interference from both sources. In order to allow for accurate coordination of these sources it is assumed that the RF interference is at the required category limit and the audio band interference is at least 6 dB below this level. So, for a 20 dB rating the audio band signal-to-interference must be 26 dB, which assumes the RF interference is already at the 20 dB level. This applies to both the communications device emissions and the hearing aid immunity.

[52] IEC 60118-1 makes reference to hearing aid output being the same for an acoustic input of 70 dB SPL and a magnetic input of 100 mA/m. Thus 31.6 mA/m is equivalent to an acoustic input of 60 dB SPL, and an acoustic input of 65 dB SPL is equivalent to 56.2 mA/m.

[53] See Section A.3 for location and specification of required measurement points.

DRAFT
Copyright © 2006 IEEE. All rights reserved.
This is a draft, subject to change until final approval by ANSI and publication.

Copyright The Institute of Electrical and Electronics Engineers, Inc.
Provided by IHS under license with IEEE
No reproduction or networking permitted without license from IHS
Not for Resale

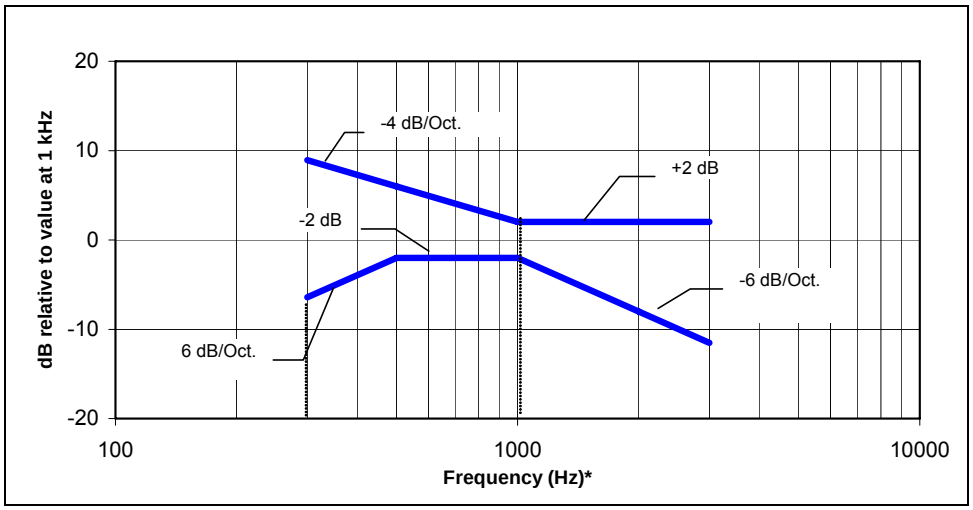

Figure 7-1 - Magnetic field frequency response for WDs with a field between -10 to -13 dB (A/m) at 1 kHz

* Note: Frequency response is between 300 and 3000 Hz

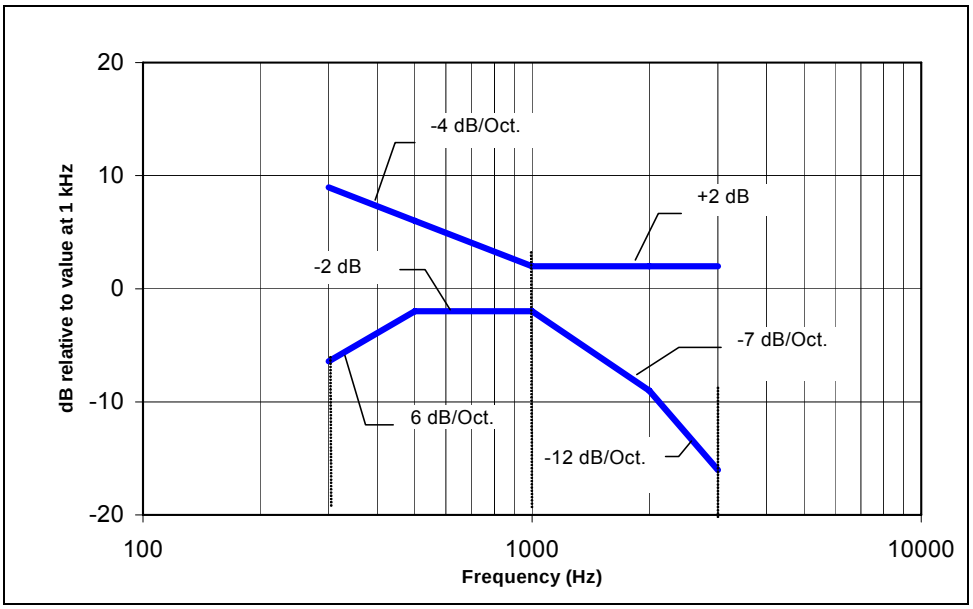

Figure 7-2 - Magnetic field frequency response for WDs with a field that exceeds -10 dB(A/m) at 1 kHz

* Note: Frequency response is between 300 and 3000 Hz

DRAFT

Copyright © 2006 IEEE. All rights reserved.
This is a draft, subject to change until final approval by ANSI and publication.

Copyright The Institute of Electrical and Electronics Engineers, Inc.
Provided by IHS under license with IEEE
No reproduction or networking permitted without license from IHS

Not for Resale

Deleted: Q

7.3.3 Signal quality

This section provides the signal quality requirement for the intended T-Coil signal from a WD. Only the RF immunity of the hearing aid is measured in T-Coil mode. It is assumed that a hearing aid can have no immunity to an interference signal in the audio band, which is the intended reception band for this mode. So, the only criteria that can be measured is the RF immunity in T-Coil mode. This is measured using the same procedure as for the audio coupling mode and at the same levels.

The worst signal quality of the 3 T-Coil signal measurements, as determined in Section 6, shall be used to determine the T-Coil mode category per Table 7-7.

A device is assessed beginning by determining the category of the RF environment in the area of the T-Coil source. The RF measurements made for the T-Coil evaluation are used to assign the category from Section 7.2, category T1 through T4. This establishes the RF environment presented by the WD to a hearing aid. If the device meets the additional requirements of this section it qualifies for the T designation, T1 through T4.

A device may be classified according to its audio coupling mode (M1 through M4), its T-Coil mode (T1 through T4), or both. Note: the T mode rating may be higher than the M mode rating.

Formatted Table

Category	Telephone parameters WD signal quality ((signal + noise)-to-noise ratio in dB)	
	AWF = 0	AWF = -5
Category T1	-20 to -10 dB	-15 to -5 dB
Category T2	-10 to 0 dB	-5 to 5 dB
Category T3	0 to 10 dB	5 to 15 dB
Category T4	> 10 dB	>15 dB
(NOTE: For cases where it can be shown that the audio-band interference is not dominated by the RF pulse rate of the phone, AWF does not apply)		

Deleted: 7-7

Deleted: Magnetic coupling parameters

Table 7-7 – T-Coil signal quality categories

Deleted: O

7.4 Accessories and options

A product may be qualified with an accessory, option or in an alternative mode of operation. However, in these cases all claims of compliance shall clearly state all components or conditions necessary to realize the stated performance level. Examples might be:

1. Product WD Model #abc when used with Headset Adapter Model #def complies with category T4.
2. Product WD Model #abc with Optional Firmware Version #ghi complies with category M3.
3. Product WD Model #abc with user-interface option setting #xyz selected complies with category T4.

DRAFT
Copyright © 2006 IEEE. All rights reserved.
This is a draft, subject to change until final approval by ANSI and publication.

Copyright The Institute of Electrical and Electronics Engineers, Inc.
Provided by IHS under license with IEEE
No reproduction or networking permitted without license from IHS
Not for Resale

7.5 Product line compliance

Deleted: L

Deleted: C

A product line may be qualified as being compliant to this standard by using the sampling and statistical guidance of CISPR/TR 16-4-3 or equivalent.[54]

[54] A large percentage (>80%) of custom hearing aids manufactured today benefit greatly from mass production techniques. This allows for the achievement of a high degree of uniformity in key performance areas. This manufacturing consistency lends itself quite readily to use of standard production line sampling techniques aimed at predicting product quality. It is expected, therefore, that relevant product line assurance techniques be applied to a hearing aid production line to support a general representation of the immunity of a specific model or class of instrument.

DRAFT
Copyright © 2006 IEEE. All rights reserved.
This is a draft, subject to change until final approval by ANSI and publication.

--`,,```,,,,````-`-`,,`,,`,`,,`---

Copyright The Institute of Electrical and Electronics Engineers, Inc.
Provided by IHS under license with IEEE
No reproduction or networking permitted without license from IHS Not for Resale

8. Calibration and measurement uncertainty

Deleted: M

Deleted: U

8.1 General

It is important that measurements made using the procedures contained herein follow acceptable practices sometimes called “good engineering practices” as it relates to the calibration of the instrumentation used. The basic accuracy and reproducibility of measurements made in accordance with this standard depend primarily upon the accuracy of the test equipment used, the care with which the calibration and the measurements are conducted, and the inherent stability of the WD under test. Where a given set of measurements is repeated in the same laboratory and by the same operator, a relatively high degree of reproducibility should normally be obtained. However, when comparing measurements made by different laboratories, allowances should be made for the influencing factors mentioned.

As a minimum the following guidance should be used:
For each measurement instrument, the following shall be clearly marked on the instrument
1. Date of last calibration
2. Date of next calibration
3. Validation initials and/or source and location of calibration records

Such calibration records are also used as inputs into the calculation of overall measurement uncertainty, which is discussed in Section 8.4.

8.2 Ambient conditions

Deleted: C

All tests in this standard shall be performed at the manufacturer’s recommended normal operating temperature and humidity and, if important, at a nominal barometric pressure. This includes both the hearing aid and the WD as well as the test instrumentation.

For reference the basic ambient conditions are:

Ambient Temperature:	23 degrees C +/- 5 degrees C
Relative Humidity (RH):	0 %<RH<80 %
Atmospheric Pressure:	101.3 kPa + 10 to -5 kPa (760 mm Hg +35mm to –150 mm)
Acoustic Ambient Noise:	> 10 dB below the measurement level, where applicable

8.3 Specific calibration requirements

Deleted: C

Deleted: R

Specific calibration requirements for the equipment discussed are contained in Annex C. When any of the equipment listed is required for a test the calibration listed in that Annex shall be conducted before the subject measurement is made.

8.4 Measurement uncertainty

Deleted: U

Typically, the overall uncertainty is calculated in part by identifying uncertainties in the instrumentation chain used in performing each of the measurements in Sections 4-7 of this standard. The figures associated with each technique show the basic components of the instrumentation chain and hence each component is evaluated as to its individual uncertainty (based on its calibration tolerances). The most common guidance documents for such evaluations are NIS 81, NIS 3003 and NIST Tech. Note 1297. Sample measurement uncertainty calculations and typical uncertainty values are given in Annex E.

The overall uncertainty shall be reported along with the test results required in Section 9.

DRAFT
Copyright © 2006 IEEE. All rights reserved.
This is a draft, subject to change until final approval by ANSI and publication.

Copyright The Institute of Electrical and Electronics Engineers, Inc.
Provided by IHS under license with IEEE
No reproduction or networking permitted without license from IHS
Not for Resale

9. Test report

Deleted: R

Test reports are the means of presenting the test results to the appropriate procuring or regulatory agency or for archiving the data in the permanent files of the testing organization. As such, test reports shall be clearly written, in unambiguous language. Unless otherwise specified, the general requirements of the test report shall follow the details contained in Section 10 of ANSI C63.4.

The test conditions listed in the following sections shall be described in the test report in order for the test results to be properly documented.

9.1 Test plan

Deleted: P

Using the guidance of this standard a specific test plan shall be prepared and included in the test report. The test plan shall detail how the more general guidance from this standard was specifically applied to the WD or hearing aid tested. Specifics of the WD's or hearing aid's operating state, test orientation and other details shall be included. If any adjustments or modifications to the guidelines given in this standard are required these shall be recorded as well.

9.2 Applicable standards

Deleted: S

In addition to this standard, any standards that were used in assessing the WD or hearing aid under shall be clearly described in the test report. Where referenced standards have more than one measurement procedure, or where the referenced measurement procedure has options, the test report shall state which procedures or options were used. The test report shall also state the issue or year of the referenced standard(s) used.

9.3 Equipment unit tested

Deleted: U

Deleted: T

The test report shall list all equipment tested, including product type, model number and any marketing designations. Serial numbers and any other distinguishing identification features shall also be included in the test report. A detailed description of any modifications made to the WD or hearing aid under test shall be recorded. Where applicable, figures or photographs should be provided to document the physical implementation of modifications. Identification or detailed description shall also be made of any accessories or cables. The rationale for selecting the WD or hearing aid tested (including the equipment units needed to be functionally complete and the necessary cabling) shall be noted in the test report.

9.4 Test configuration

Deleted: C

The setups of the equipment and cable or wire placement on the test site that produce the highest emissions shall be clearly shown and described. It is allowable to use drawings or photographs for this purpose. A block diagram showing the interconnection of the major functional units is also useful.

The operating state of the WD or hearing aid under test shall be recorded, such as the means used to assure that the WD was operating in the desired mode, the transmission channel, RF power level and loudness control. In addition, when applicable the base station simulator used, the type of computer control, with software revision levels, a description of feeding circuits and a description of other similar support equipment shall be recorded.

9.5 List of test equipment

Deleted: T

Deleted: E

A complete list of all test equipment used shall be included with the test report. Manufacturer's model and serial numbers, and date of last calibration and calibration interval, shall be included. Measurement cable loss, measuring instrument bandwidth and detector function, video bandwidth, if appropriate, and antenna factors shall also be included, where applicable. When appropriate, site calibration data shall be included or summarized and the location of the complete calibration data referenced.

9.6 Units of measurement

Deleted: M

Measurements of operating frequency, including variations of the operating frequency with ambient temperature and input voltage, and occupied bandwidth of intentional radiators shall be reported in units of Hertz or multiples thereof [e.g., kiloHertz (kHz), megahertz (MHz)]. Measurements of RF input power to intentional radiators shall be reported in units of watts.

DRAFT
Copyright © 2006 IEEE. All rights reserved.
This is a draft, subject to change until final approval by ANSI and publication.

--`,,```,,,,````-`-`,,`,,`,`,,`---

Copyright The Institute of Electrical and Electronics Engineers, Inc.
Provided by IHS under license with IEEE
No reproduction or networking permitted without license from IHS Not for Resale

All information necessary to reproduce a given measurement shall be recorded. If a reference voltage is used, the location of the reference voltage within the system and how it was measured, for example open or closed circuit, shall be recorded. For other types of measurements the locations of measurement reference point or plane, alignment and other relevant factors shall be recorded. All formulas of conversions and conversion factors, if used, shall be included in the measurement report.

9.7 Location of test site

The location of the test site shall be identified in the test report. Sites that have received recognition from various accreditation bodies shall use the same site address information as was included in their original application for recognition.

9.8 Measurement procedures

The sequence of testing followed to determine the data included in the test report should be documented.

9.9 Reporting measurement data

The measurement results along with the appropriate limits for comparison shall be presented in tabular or graphical form. Alternatively, recorded charts or photographs of a spectrum analyzer display or other self-displaying instrumentation may be used if the information is clearly presented showing comparison to the limits, and all data conversions are explained. The method of comparing measured data output to the limits shall be included. The measurement uncertainty of the measurements shall also be recorded. The calculations leading to the overall measurement uncertainty shall also be included as an annex.

9.10 General and special conditions

If an alternate test method was used, the test report shall identify and describe the alternate method used, provide justification for its use, and describe how the results obtained were correlated with the methods specified by this standard. Instrumentation, instrument attenuator and bandwidth settings, detector function, WD or hearing aid arrangement, and all other pertinent details of the test shall be provided so that the alternate test method can be replicated. Where automatic scan techniques were used, the name of the program used with version number and an explanation of how the highest emission relative to the limit from the WD or hearing aid under test was determined and the scan rate used to obtain recorded emissions is to be included in the test report. The actual operating and environmental conditions (e.g., voltage, power line frequency, temperature, relative humidity, etc.) shall be listed in the report.

9.11 Summary of results

The test report summary section shall indicate the category of WD or hearing aid under test or if the device failed all the category requirements, and give margins (where applicable) with respect to the limits to which it was tested. Due consideration shall be made with respect to the measurement uncertainty in stating the passing or failing result. See Section 8.4 for a discussion on uncertainty. If the equipment only passes with specific modifications or special attributes, this information shall be included in the summary results.

9.12 Required signatures

The test report shall contain the signature of the representative of the organization performing the tests. In addition, the test report shall contain the identification of the personnel who were responsible for the proper execution of the test, and the name and address of the party requesting the tests. If changes are made during the period of test to bring the WD or hearing aid into compliance, the test report shall so indicate. In addition, the report submitted to the procuring organization or regulatory agency shall include a signed statement by the manufacturer or developer agreeing to the changes and their incorporation into production.

9.13 Test report annexes

The test report shall contain, if required, photographs or detailed sketches of the configuration of the WD or hearing aid under test. Sufficient information shall be recorded for the setup to be reconfigured with adequate detail so as to allow the original test to be replicated with a high likelihood that the test results would be in agreement with the results of the original test, within acceptable tolerances.

Deleted: T
Deleted: S
Deleted: P
Deleted: M
Deleted: D
Deleted: S
Deleted: C
Deleted: R
Deleted: S
Deleted: R
Deleted: A

DRAFT
Copyright © 2006 IEEE. All rights reserved.
This is a draft, subject to change until final approval by ANSI and publication.

--`,,```,,,,````-`-`,,`,,`,`,,`---

Copyright The Institute of Electrical and Electronics Engineers, Inc.
Provided by IHS under license with IEEE
No reproduction or networking permitted without license from IHS
Not for Resale

9.14 Test report disposition

The test report shall be maintained by the testing organization for a period of at least three years following the date of the test. The manufacturer may be required by a regulatory agency to maintain a copy of the report for a longer period of time.

Deleted: R

Deleted: D

DRAFT
Copyright © 2006 IEEE. All rights reserved.
This is a draft, subject to change until final approval by ANSI and publication.

Copyright The Institute of Electrical and Electronics Engineers, Inc.
Provided by IHS under license with IEEE
No reproduction or networking permitted without license from IHS
Not for Resale

10. Bibliography

[B1] Accurate Power Measurements in Digital RF communications, Wireless Design and Development, November 1996.

[B2] Analysis of Peak Power in GSM and CDMA Digital Cellular Systems, Microwave journal, October 1996.

[B3] Berger, H. Stephen, "Compatibility Between Hearing Aids and Wireless Devices" Electronic Industries Forum, Boston, Ma. , May, 1997.

[B4] Berger, H. Stephen, "Hearing Aid and Cellular Phone Compatibility: Working Toward Solutions" Wireless Telephones and Hearing Aids: New Challenges for Audiology, Gallaudet University, Washington, D.C., May, 1997, (To be reprinted in the American Journal of Audiology).

[B5] Berger, H. Stephen, "Hearing Aid Compatibility with Wireless Communications Devices" IEEE International Symposium on Electromagnetic Compatibility, Austin, Tx. August, 1997.

[B6] Bronaugh, E.L., "Simplifying EMI Immunity (Susceptibility) Tests in TEM Cells" in The 1990 IEEE International Symposium on Electromagnetic Compatibility Symposium Record, Washington, D.C., August 1990, pp. 488-491.

[B7] Byme, D. & Dillon, H., The National Acoustics Laboratory (NAL) New Procedure for Selecting the Gain and Frequency Response of a Hearing Aid, Ear and Hearing 7:257-265, 1986.

[B8] Crawford, M.L., "Measurement of Electromagnetic Radiation from Electronic Equipment using TEM Transmission Cells", U.S. Department of Commerce, National Bureau of Standards, NBSIR 73-306, Feb. 1973.

[B9] Crawford, M.L. and Workman, J.L., "Using a TEM Cell for EMC Measurements of Electronic Equipment", U.S. Department of Commerce, National Bureau of Standards, Technical Note 1013, July 1981.

[B10] Kecker, W.T., Crawford, M.L., and Wilson, W.A., "Construction of a Transverse Electromagnetic Cell", U.S. Department of Commerce, National Bureau of Standards, Technical Note 1011, Nov. 1978.

[B11] EHIMA GSM Project, Development phase, Project Report (1st part) Revision A. Technical-Audiological Laboratory and Telecom Denmark, October 1993.

[B12] EHIMA GSM Project, Development phase, Part II Project Report. Technical-Audiological Laboratory and Telecom Denmark, June 1994.

[B13] EHIMA GSM Project Final Report, Hearing Aids and GSM Mobile Telephones: Interference Problems, Methods of Measurement and Levels of Immunity. Technical-Audiological Laboratory and Telecom Denmark, 1995.

[B14] GSM Basics: An Introduction, Microwave Journal, October 1996.

[B15] GSM Technical Overview, Roadmap. Motorola document T-325AP, September 1994.

[B16] HAMPIS Report, Comparison of Mobile phone electromagnetic near field with an up scaled electromagnetic far field, using hearing aid as reference, 21 October 1999.[55]

[B17] Hearing Aids/GSM, Report from OTWIDAN, Technical-Audiological Laboratory and Telecom Denmark, April 1993.

[B18] Technical Report, GSM 05.90, GSM EMC Considerations, European Telecommunications Standards Institute, January 1993.

[B19] Joyner, K.H. et al, Interference to Hearing Aids by the New Digital Mobile Telephone System, Global System for Mobile (GSM) Communication Standard, National Acoustic Laboratory, Australian Hearing Series, Sydney 1993.

[B20] Joyner, K.H. et al, Interference to Hearing Aids by the Digital Mobile Telephone System, Global System for Mobile Communications (GSM), NAL Report #131, National Acoustic Laboratory, Australian Hearing Series, Sydney 1995.

[B21] Königstein, D. and Hansen, D., "A New Family of TEM Cells with Enlarged Bandwidth and Optimized Working Volume" in The Proceedings of the 7th International Symposium on EMC, Zurich, Switzerland, March 1987, pp. 127-132.

[B22] Kuk F., Hjorstgaard Nielson K "Factors affecting interference from digital cellular telephones", Hearing Journal, 1997; 50:9, 32 - 34.

[55] HAMPIS Test Reports are available at: http://www.delta.dk/hampiis/report.htm.

DRAFT

Copyright © 2006 IEEE. All rights reserved.

This is a draft, subject to change until final approval by ANSI and publication.

Copyright The Institute of Electrical and Electronics Engineers, Inc.
Provided by IHS under license with IEEE
No reproduction or networking permitted without license from IHS Not for Resale

[B22] Levitt, H., Kozma-Spytek, L. and Harkins, J., In-the-Ear Measurements of Interference in Hearing Aids from Digital Wireless Telephones, Seminars in Hearing, **26(2**), 87-98, 2005.
[B23] Ma, M.A. and Kanda, M., "Electromagnetic Compatibility and Interference Metrology", U.S. Department of Commerce, National Bureau of Standards, Technical Note 1099, July 1986, pp. 17-43.
[B24] Ma, M.A., Sreenivasiah, I. and Chang, D.C., "A Method of Determining the Emission and Susceptibility Levels of Electrically Small Objects Using a TEM Cell", U.S. Department of Commerce, National Bureau of Standards, Technical Note 1040, July 1981.
[B25] McCandless, G.A. & Lyregaard, P.E., Prescription of Gain/Output (POGO) for Hearing Aids, Hearing Instruments 1:16-21, 1983.
[B26] Richard, M., Kanda M., Bit-Babik, G., DiNallo, C., Chou, CK. A Rugged Microstrip Printed Dipole Reference for SAR System Verification. 2002 IEEE MTT-S International Microwave Symposium, Seattle, WA. June 2-7, 2002.
[B27] Skopec, M., "Hearing Aid Electromagnetic Interference from Digital Wireless Telephones" IEEE Transactions on Rehabilitation Engineering, Vol. 6, No. 2, pp 235-239, June 1998.
[B28] Victorian, Thomas A., "Digital Cellular Telephone Interference and Hearing Aid Compatibility - An Update", Hearing Journal, 1998; 51:10, 53 - 60.
[B29] Winch, R.P., Electricity and Magnetism, Prentice-Hall, Englewood Cliffs, NJ 1967.
[B30] Wong, G.S.K., & Embleton, T.F.W. eds., AIP Handbook of Condenser Microphones: Theory, Calibration and Measurements", AIP Press.

DRAFT
Copyright © 2006 IEEE. All rights reserved.
This is a draft, subject to change until final approval by ANSI and publication.

Copyright The Institute of Electrical and Electronics Engineers, Inc.
Provided by IHS under license with IEEE
No reproduction or networking permitted without license from IHS
Not for Resale

Deleted: Reference
Deleted: Axes
Deleted: NORMATIVE
Deleted: Definition
Deleted: Hearing
Deleted: Aid
Deleted: Immunity
Deleted: Tests

Annex A. Definition of reference axes - (Normative)

A.1 Axes definition for hearing aid RF immunity tests

The Z axis is the vertical axis, the X axis is approximately parallel to the side surface of the user's head and orthogonal to the Z axis, and the Y axis is orthogonal to both the Z and X axes. Alternately, the Y axis may be defined by a line through the center points of the ears on the head. The +Z direction is up, the +Y direction is into the head, for a right-hand side hearing aid position, and the + X direction is from the back of the head to the front of the head.

The hearing aid reference orientation is defined by the manufacturer for each type of hearing aid with respect to this framework to represent the typical orientation on the user, similar to the example shown in Figure A-1 for the BTE hearing aid.

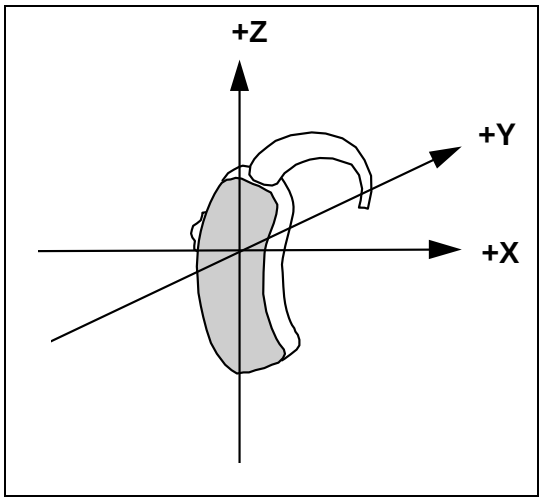

Figure A-1 - Behind-the-ear hearing aid

DRAFT
Copyright © 2006 IEEE. All rights reserved.
This is an unapproved IEEE Standards Department Draft, subject to change.

--`,,```,,,,````-`-`,,`,,`,`,,`---

Copyright The Institute of Electrical and Electronics Engineers, Inc.
Provided by IHS under license with IEEE
No reproduction or networking permitted without license from IHS
Not for Resale

Deleted: Emission
Deleted: Measurements
Deleted: Reference
Deleted: Plane

A.2 WD RF emission measurements reference and plane

Figure A-2 and Figure A-5 illustrate the references and reference plane that shall be used in the WD emissions measurement.

- The grid is 5 cm by 5 cm area that is divided into 9 evenly sized blocks or sub-grids.
- The grid is centered on the audio frequency output transducer of the WD (speaker or T-coil).
- The grid is in a reference plane, which is defined as the planar area that contains the highest point in the area of the phone that normally rests against the user's ear. It is parallel to the centerline of the receiver area of the phone and is defined by the points of the receiver-end of the WD handset, which, in normal handset use, rest against the ear.
- The measurement plane is parallel to, and 1.0 cm in front of, the reference plane.

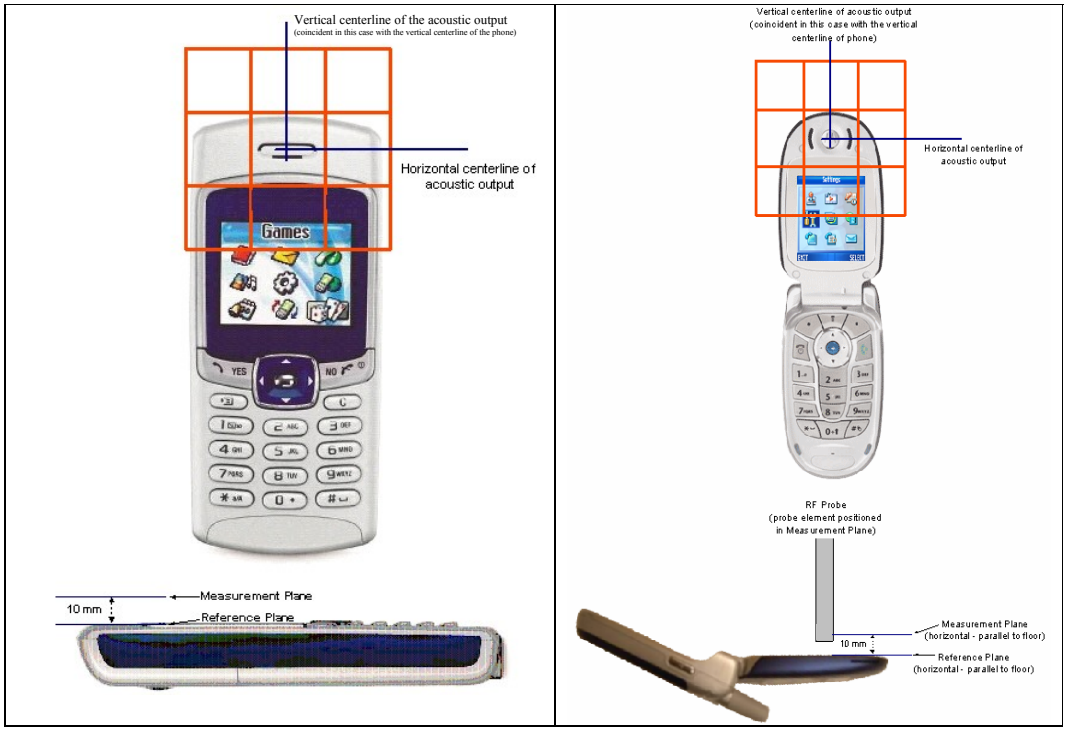

Figure A-2 - WD reference and plane for RF emission measurements

DRAFT
Copyright © 2006 IEEE. All rights reserved.
This is an unapproved IEEE Standards Department Draft, subject to change.

Copyright The Institute of Electrical and Electronics Engineers, Inc.
Provided by IHS under license with IEEE
No reproduction or networking permitted without license from IHS
Not for Resale

A.2.1 Gauge blocks for setting measurement distance to probe

Deleted: Blocks
Deleted: Setting
Deleted: Measurement
Deleted: Distance
Deleted: Probe

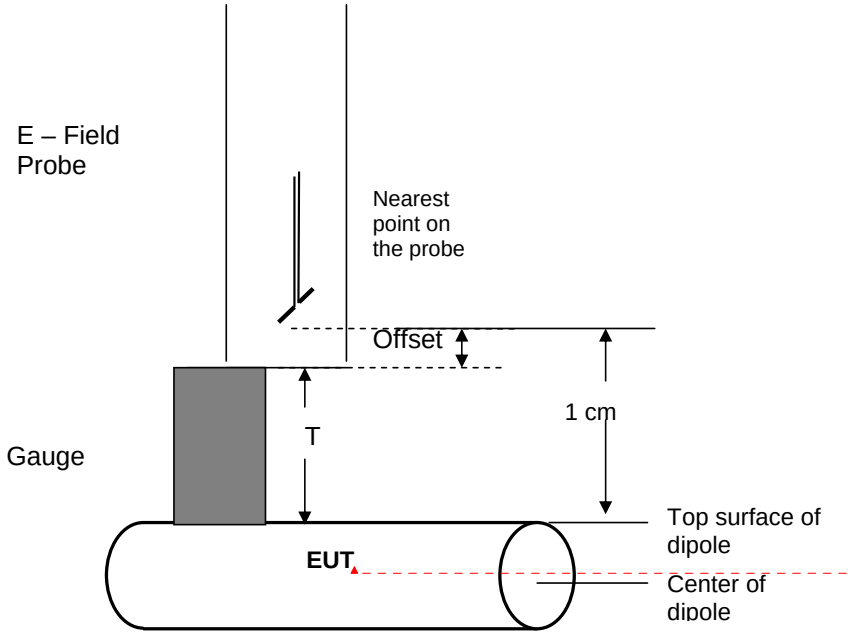

Formatted: Font: Bold

Figure A-3 – Gauge block with E-field probe

DRAFT
Copyright © 2006 IEEE. All rights reserved.
This is an unapproved IEEE Standards Department Draft, subject to change.

Copyright The Institute of Electrical and Electronics Engineers, Inc.
Provided by IHS under license with IEEE
No reproduction or networking permitted without license from IHS
Not for Resale

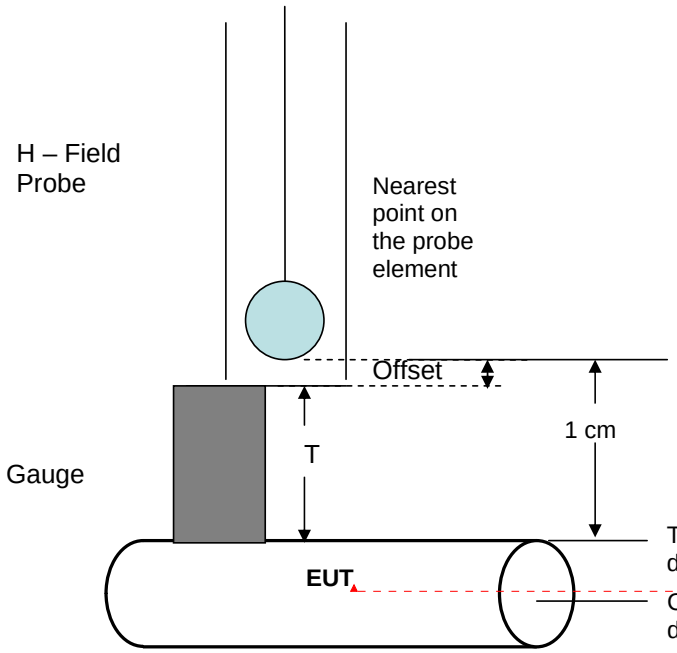

Figure A-4 – Gauge block with H-field probe

Formatted: Font: Bold

Deleted: Block

Deleted: Field

Deleted: Probe

DRAFT
Copyright © 2006 IEEE. All rights reserved.
This is an unapproved IEEE Standards Department Draft, subject to change.

Copyright The Institute of Electrical and Electronics Engineers, Inc.
Provided by IHS under license with IEEE
No reproduction or networking permitted without license from IHS
Not for Resale

Deleted: coil

A.3 T-Coil measurement points and reference plane

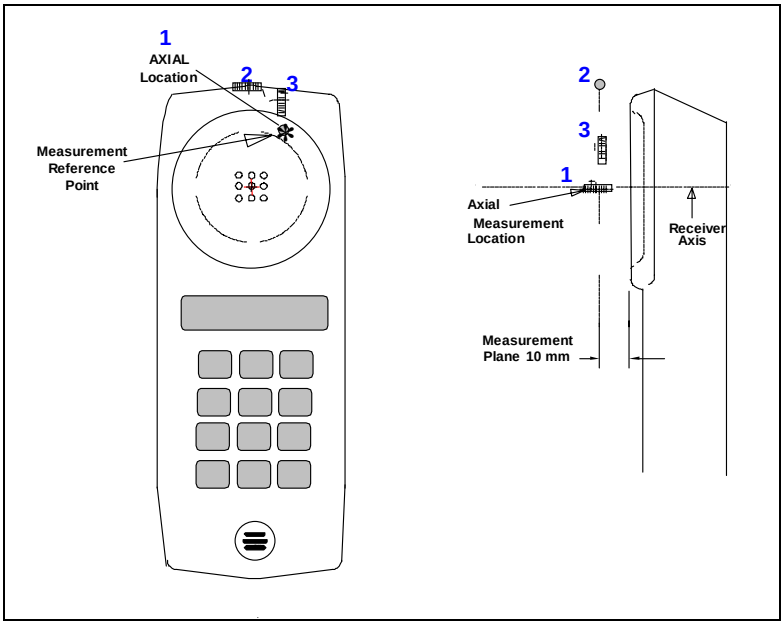

Figure A-5 - Axis & planes for WD audio frequency magnetic field measurements

NOTE: For reference purposes the grid used for Clause 4 testing of the WD in T-Coil mode has been added to this graphic

Figure A-5 illustrates the three standard probe orientations. Position 1 is the axial orientation of the probe coil; orientations 2-3 are radial orientations. The space between the measurement positions is not fixed. It is recommended that a scan of the WD be done for each probe coil orientation and that the maximum level recorded be used as the reading for that orientation of the probe coil

1) The reference plane is the planar area that contains the highest point in the area of the phone that normally rests against the user's ear. It is parallel to the centerline of the receiver area of the phone and is defined by the points of the receiver-end of the WD handset, which, in normal handset use, rest against the ear.
2) The measurement plane is parallel to, and 1.0 cm in front of, the reference plane.
3) The reference axis is normal to the reference plane and passes through the center of the receiver speaker section (or the center of the hole array); or may be centered on a secondary inductive source. The actual location of the measurement point shall be noted in the test report as the measurement reference point.
4) The measurement points may be located where the axial and radial field intensity measurements are optimum with regard to the requirements. However, the measurement points should be near the acoustic output of the WD and shall be located in the same half of the phone as the WD receiver. In a WD handset with a centered receiver and a circularly symmetrical magnetic field, the measurement axis and the reference axis would coincide.
5) The relative spacing of each measurement orientation is not fixed. The axial and two radial orientations should be chosen to select the optimal position.

DRAFT
Copyright © 2006 IEEE. All rights reserved.
This is an unapproved IEEE Standards Department Draft, subject to change.

--`,,```,,,,````-`-`,,`,,`,`,,`---

Copyright The Institute of Electrical and Electronics Engineers, Inc.
Provided by IHS under license with IEEE
No reproduction or networking permitted without license from IHS
Not for Resale

6) The measurement point for the axial position is located 1.0 cm from the reference plane on the measurement axis. The actual location of the measurement point shall be noted in test reports and designated as the measurement reference point.

DRAFT

Copyright © 2006 IEEE. All rights reserved.
This is an unapproved IEEE Standards Department Draft, subject to change.

Copyright The Institute of Electrical and Electronics Engineers, Inc.
Provided by IHS under license with IEEE
No reproduction or networking permitted without license from IHS Not for Resale

Deleted: Frequencies
Deleted: NORMATIVE
Deleted: Test
Deleted: Frequencies

Annex B. Test frequencies - (Normative)

B.1 Acoustic test frequencies

This Annex list the test frequencies and 1/3 octave test bandwidths to be used for the test contained in this document. These frequencies are from ISO 3-1973 and ISO 266-1975.

1/3 - Octave band (Hz)	Included frequencies (Hz)
50	44.7 - 56.2
63	56.2 - 70.8
80	70.8 - 89.1
100	89.1 - 112.0
125	112 - 141
160	141 - 178
200	179 - 224
250	224 - 282
315	282 - 355
400	355 - 447
500	447 - 562
630	562 - 708
800	708 - 891
1000	891 - 1120
1250	1120 - 1410
1600	1410 - 1780
2000	1780 - 2240
2500	2240 - 2820
3150	2820 - 3550
4000	3550 - 4470
5000	4470 - 5620

Table B-1 – Acoustic test frequencies

NOTE: The required measurement points for WD testing use frequencies from 300 to 3000 Hz. See Section 7.3.

Deleted: Channels
Deleted: Frequencies

B.2 Test channels and frequencies

The frequencies listed in the table below are those that lie in the center of the bands used for cellular telephony. To facilitate setting of a base station simulator for ABM measurements, specific band plan channel numbers are listed that may be used in lieu of the band center frequencies.

Test frequencies & associated channels	
Channel (at or near)	Frequency (MHz)
Cellular 850	

DRAFT
Copyright © 2006 IEEE. All rights reserved.
This is an unapproved IEEE Standards Department Draft, subject to change.

--`,,```,,,,````-`-`,,`,,`,`,,`---
Copyright The Institute of Electrical and Electronics Engineers, Inc.
Provided by IHS under license with IEEE
No reproduction or networking permitted without license from IHS
Not for Resale

334 (CDMA)	835
334 (TDMA)	835
UARFCN 4175 (UMTS)	835
189 (GSM)	836
PCS 1900	
660 (GSM)	1880
600 (CDMA)	1880
1001 (TDMA)	1880
UARFCN 9400 (UMTS)	1880
SMR 800	
370 (*i*DEN)	813.5
SMR 900	
281 (*i*DEN)	898.5

Table B-2 - Test channels and frequencies[1]

[1] Frequencies and channels in the table are based on FCC part 22 for cellular; FCC part 24 for PCS; and FCC part 90 for SMR (47 CFR 22, 47 CFR 24 and 47 CFR 90).

DRAFT
Copyright © 2006 IEEE. All rights reserved.
This is an unapproved IEEE Standards Department Draft, subject to change.

Copyright The Institute of Electrical and Electronics Engineers, Inc.
Provided by IHS under license with IEEE
No reproduction or networking permitted without license from IHS
Not for Resale

Annex C. Equipment and setup calibration - (Normative)

Deleted: Setup
Deleted: Calibration
Deleted: NORMATIVE

C.1 Test enclosures

Deleted: Enclosures

C.1.1 RF test enclosures

Deleted: Test
Deleted: Enclosures

When tests require semi-anechoic enclosures, the quality of the enclosures shall be measured. This can be done using at least two common ways:

a. Measuring and meeting the "volumetric" normalized site attenuation using the procedures described in ANSI C63.4-2003.

b. Calibrating the radiated immunity field using the procedures in IEC 61000-4-3.

The general requirements above also satisfy the requirement that the undesired reflections from those enclosures, which are not perfectly anechoic, are suppressed by at least 20 dB. In addition, such anechoic enclosures shall be tested to ensure that any RF leakage from the RF ambient outside the enclosure is at least 10 dB down from the required measurement level.

The calibration requirements for WideBand Transverse ElectroMagnetic (WB TEM) devices are based on the direct measurement of the field produced in the test zone. A secondary procedure is performed by calculation, using the power into the device and the physical dimensions of the center conductor (septum) separation from the referenced ground plane. See references [B2-B4] and standards [R2 and R21]

C.2 Audio input source

Deleted: Input
Deleted: Source

An acoustic signal shall be supplied to the hearing aid under test during application of interfering RF test fields, so that hearing aid AGC circuits are in a realistic state of operation, and so that interfering effects on the intended audio signal may be detected. This frequency shall have sufficient separation from 1000 Hz (the RF modulation frequency used in testing) so that as the intended signal it can be independently observed at the hearing aid output by means of tuned filters or an audio signal analyzer or wave analyzer. A frequency of 1300 Hz shall be used provided that the hearing aid frequency response between 1000 Hz and 1300 Hz is smooth (<0.5 dB ripple) and changes less than a total of 2 dB over this range. The pre-test data shall be examined to verify this fact. If necessary one or both of the two frequencies involved may be shifted to a region where the response is smoother and the slope is less than 6 dB per octave in the frequency interval. The frequency interval should be at least 1/3 octave and should lie within the bounds of 600 Hz to 3000 Hz.

C.3 Calibration of RF electric and magnetic field probes

Deleted: Electric
Deleted: Magnetic
Deleted: Field
Deleted: Probes

The purpose of the calibration for probe modulation response factor is to align the probe readings with the quantity of the RF signal most closely correlated with the intensity of interference to hearing aids.

Probes used for measuring near-field emissions and calibrating immunity field levels shall be calibrated using the guidelines contained in IEEE 1309-2005. The field pattern shall be isotropic to a tolerance of +/- 20%. If probes with coaxial cables are used, the influence of cables on the field shall be accounted for in the calibration. The magnetic field probe may have one, two or three loops. In the case where these probes have less than three mutually orthogonal dipoles or loops, they shall be capable of rotation about their geometric centers to allow calibration and measurement in the three orthogonal axes.

IEEE Std 1309-2005 [R44] provides for three calibration methods and several grades of calibration. The two methods that are most appropriate for C63.19 probe calibrations are Method A, using a transfer standard probe, or Method B, using a standard gain horn antenna in an anechoic chamber. The most appropriate grade of calibration

DRAFT
Copyright © 2006 IEEE. All rights reserved.
This is an unapproved IEEE Standards Department Draft, subject to change.

--`,,```,,,,````-`-`,,`,,`,`,,`---

Copyright The Institute of Electrical and Electronics Engineers, Inc.
Provided by IHS under license with IEEE
No reproduction or networking permitted without license from IHS
Not for Resale

is: FD, F2 (f_L, f_M, f_H)[2], A1, I0 for single-axis probes or I1 for "isotropic" probes, R0, T0, and M0. The grade designations are found in Annex A of IEEE Std 1309-2005.

The "maximum interception alignment" as defined and specified in Clause 4.2.2.1 of IEEE Std 1309-2005 shall be used for calibration. The calibration field generation shall be via a pyramidal horn antenna in an anechoic chamber, either as a standard gain antenna, Method B (Table 2 of IEEE Std 1309-2005), or as a reference field generator using a similar probe as a transfer standard, Method A (Table 2 of IEEE Std 1309-2005). Anisotropy of "isotropic" probes shall be measured in accordance with Clause 7.1.3 and equation (2) of IEEE Std 1309-2005.

The *best-case* expanded uncertainty, U, for probe calibration is $U \approx \pm 1.1$ dB for Method A and $U \approx \pm 1.0$ dB for Method B. Out of the allowable expanded uncertainty of ±2 dB (see Section 4.1.2), these calibration uncertainties leave approximately ±0.84 dB to ±0.86 dB in terms of combined standard uncertainty, u_C, for other contributors. That is: $U = \pm 2$ dB, thus $u_C = \pm 2 \div 2 = \pm 1$ dB; $u_S^2 = u_C^2 - u_{cal}^2$; $u_{cal} = U_{cal} \div 2 = \pm 1.1 \div 2 = \pm 0.55$ dB (the value, $U_{cal} = \pm 1.1$ dB, is from Method A); and, $u_S = \sqrt{(1^2 - 0.55^2)} = \pm 0.84$ dB. (See Annex E for further information on estimation of uncertainty.)

C.3.1 RF field probe modulation response

Deleted: Field
Deleted: Probe
Deleted: Modulation
Deleted: Response

In addition, for probes with a response to variations in the RF field of < 20 kHz, a calibration shall be made of the modulation response of the probe and its instrumentation chain. This calibration shall be performed with the field probe attached to the instrumentation that is to be used with it during the measurement. The response of the probe system to a CW field at the frequency(s) of interest is compared to its response to a modulated signal with equal amplitude. The field level of the test signals shall be more than 10 dB above the ambient level and the noise floor of the instrumentation being used. The ratio of the CW reading to that taken with a modulated field shall be applied to the readings taken of modulated fields of the specified type. This may be done using the following procedure:

1. Fixing the probe in a set location relative to a field generating device, such as a reference dipole antenna or WB TEM, as illustrated in Figure C-1.
2. Illuminate the probe with a CW signal at the intended measurement frequency.
3. Record the reading of the probe measurement system of the CW signal.
4. Record the power level of the CW signal being used to drive the field generating device.
5. Substitute a signal using the same modulation as that used by the intended WD for the CW signal.
6. Set the amplitude during transmission of the modulated signal to equal the amplitude of the CW signal.
7. Switch the generator from modulation to CW and record the output reading from the probe measurement system.
8. The ratio, in linear units, of the CW to modulated signal reading is the modulation factor.

Deleted: Determine

Deleted: Record the reading of the probe measurement system of the modulated signal.¶

An alternative procedure is as follows:

1. Fix the field probe in a set location relative to a field generating device, such as the reference dipole antenna, as illustrated in Figure C-1.
2. Illuminate the probe using the wireless device connected to the reference dipole with a test signal at the intended measurement frequency, Ensure there is sufficient field coupling between the probe and the antenna so the resulting reading is greater than 10 dB above the probe system noise floor but within the systems operating range.
3. Record the amplitude applied to the antenna during transmission and the field strength measured by the E-field probe located near the tip of the dipole antenna.[3]

[2] f_L, f_M, and f_H refer to the low, middle, and high frequencies, respectively, of the probe-range to be calibrated.
[3] The "RF interference level" of the signal applied to the antenna may be measured in any of several ways, such as using a directional coupler to monitor the forward power to the antenna or by connecting the cable first to the spectrum analyzer and then to the antenna.

DRAFT
Copyright © 2006 IEEE. All rights reserved.
This is an unapproved IEEE Standards Department Draft, subject to change.

Copyright The Institute of Electrical and Electronics Engineers, Inc.
Provided by IHS under license with IEEE
No reproduction or networking permitted without license from IHS
Not for Resale

4. Replace the wireless device with an RF signal generator producing an unmodulated CW signal and set to the wireless device operating frequency.
5. Set the amplitude of the unmodulated signal to equal that recorded from the wireless device.
6. Record the reading of the probe measurement system of the unmodulated signal.
7. The ratio, in linear units, of the probe reading in step 6 to the reading in step 3 is the E-field modulation factor.

8 Repeat the above using the H-field probe, except locate the probe at the center of the dipole.

The modulation factors obtained by one of these methods shall be applied to readings taken of the actual WD, in order to obtain an accurate reading.

In the procedures above, the amplitude of the signals shall be set so that the resulting reading is greater than 10 dB above the probe system noise floor but within the systems operating range.

When performing this procedure the operator must ensure that Discontinuous Transmission (DTX) is disabled, or some means of preventing the WD from switching into the DTX mode must be employed. Depending upon the measurement method utilized, failure to disable DTX can result in a substantial measurement error.

Deleted: Dipoles

C.4 Calibration of dipoles

This section describes calibration of dipoles over a range of frequencies, 800 - 950 MHz and 1.6 - 2.5 GHz such that the magnetic field at 10 mm distance from the center of the dipole and the electric field 10 mm out from the end of the dipole is kept constant.

The intent of this procedure is to assure the consistency of the magnetic and electric field levels a hearing aid is exposed to, during immunity testing, over the specified range of test frequencies.

C.4.1 Equipment

1. Broadband dipoles 800 - 950 MHz or 1.6 - 2.5 GHz
2. Signal Generator
3. HF Amplifier
4. Calibrated magnetic field and electric field probe
5. Appropriate test location, i.e.: anechoic room or at least a test area large enough so that reflections off of nearby objects do not disturb the test results.

Deleted: Procedure

C.4.2 Calibration procedure

DRAFT
Copyright © 2006 IEEE. All rights reserved.
This is an unapproved IEEE Standards Department Draft, subject to change.

Copyright The Institute of Electrical and Electronics Engineers, Inc.
Provided by IHS under license with IEEE
No reproduction or networking permitted without license from IHS
Not for Resale

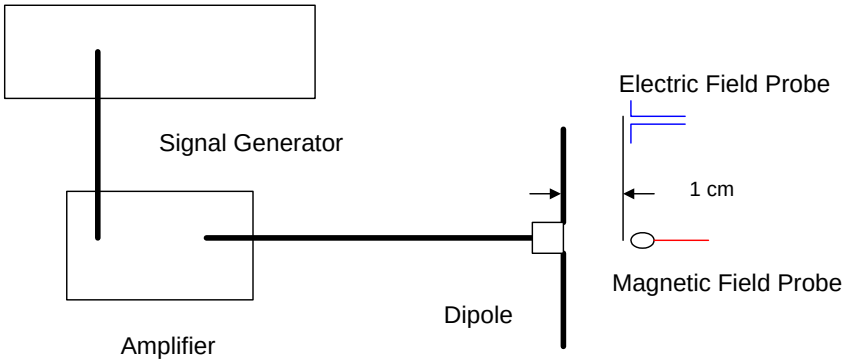

Figure C-1 – Dipole calibration procedure

Deleted: Calibration

Deleted: Procedure

1. Connect equipment as shown in Figure C-1 .

2. Position the magnetic field probe at 10 mm distance from the top surface of the dipole, which is also fixed in an appropriate fixture (Figure C-1). A gauge block, like that shown in Figure A-4, may be used to accurately set the 10 mm distance.

   Make sure that the desired measuring channel of the probe is aligned for maximum reception of the magnetic field generated by the dipole. This may be accomplished by rotating the probe until the maximum value is located. The magnetic field probe shall have been calibrated over the frequency range of 800-950 MHz or 1.6-2.5 GHz using standard calibration techniques.

3. Adjust the power level of the signal generator at the initial starting frequency such that the desired magnetic field strength at the 10 mm distance from the center of the dipole is achieved. Setting the field strength to be in the range of category M2 is advised, see Table 4-1 for representative values.

4. Step the frequency in step increments of ≤1%, adjusting the power fed into the dipole such that the desired magnetic field strength is maintained.

5. Record the Frequency and Signal Generator setting at each frequency for use during the actual immunity test. A sample calibration chart in is provided in Table C-1, as an example.

E-field Calibrated value: (49.54 dB V/m)	
Frequency (MHz)	**Net power (dBm)**
800	
801.5	
803	
804.5	
806	
-	

H-field Calibrated value: (0 dB A/m)	
Frequency (MHz)	**Net power (dBm)**
800	
801.5	
803	
804.5	
806	
-	

DRAFT
Copyright © 2006 IEEE. All rights reserved.
This is an unapproved IEEE Standards Department Draft, subject to change.

Copyright The Institute of Electrical and Electronics Engineers, Inc.
Provided by IHS under license with IEEE
No reproduction or networking permitted without license from IHS
Not for Resale

-	
-	
950	

-	
-	
950	

Table C-1 – Sample calibration chart

6. Repeat steps using an electric field probe located off the end of the dipole.

If the dipole has a broadband matching section, check that the VSWR is within the specified VSWR over the test band. Tune the dipole or adjust the matching section, if necessary, to achieve better matching.

C.4.3 Dipole calibration procedure for wireless devices

Deleted: Calibration
Deleted: Procedure
Deleted: W
Deleted: Devices

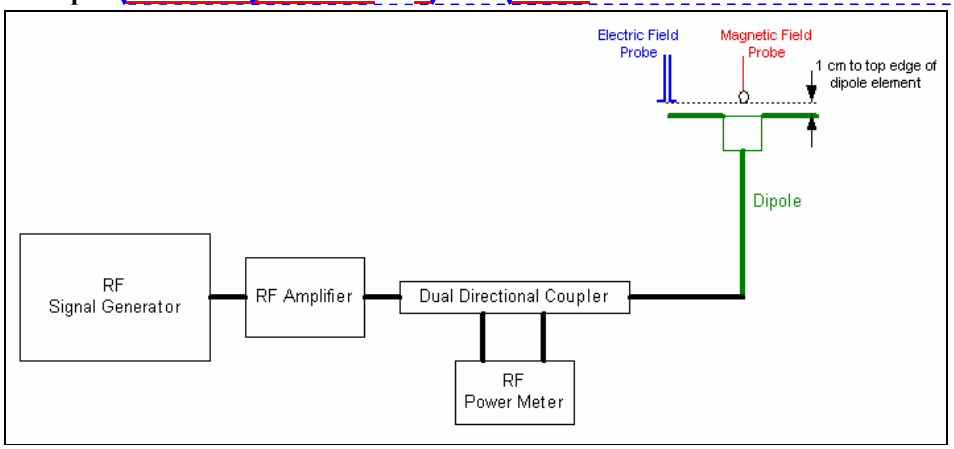

Figure C-2 – WD dipole calibration procedure

DRAFT
Copyright © 2006 IEEE. All rights reserved.
This is an unapproved IEEE Standards Department Draft, subject to change.

Copyright The Institute of Electrical and Electronics Engineers, Inc.
Provided by IHS under license with IEEE
No reproduction or networking permitted without license from IHS
Not for Resale

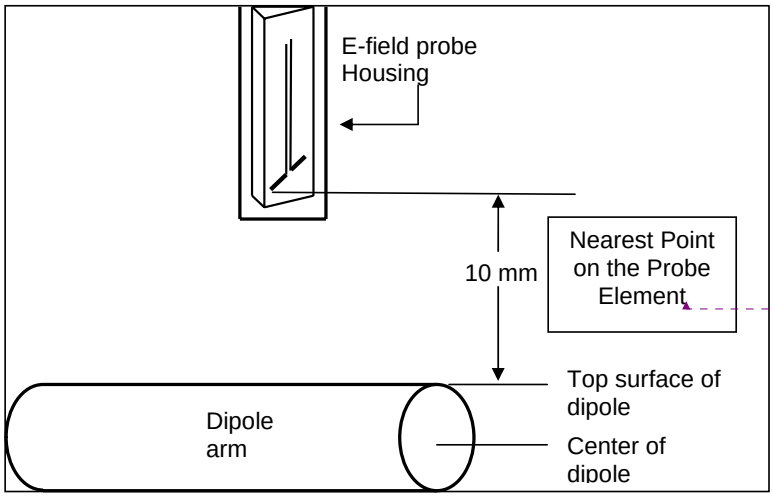

Formatted: Font: 11 pt

Figure C-3 – Probe location for WD dipole calibration

1. Connect equipment as shown in Figure C-1 – Dipole Calibration Procedure

2. Position the magnetic field probe at 10 mm distance from the nearest point on the probe element to the top surface (edge) of the dipole as shown in Figure C-3. The desired measuring channel of the probe shall be aligned for maximum reception of the field generated by the dipole. This may be accomplished by rotating the probe until the maximum value is located. The field probe shall have been calibrated at all frequencies in Section B.2

3. Set the power level of the signal generator to a known power, adjusting for return loss input to the dipole at the initial starting frequency, and record the reading from the field probe

4. Set the signal generator frequency to all other frequencies given in Table B-1 that meet the insertion loss, VSWR, balance and gain specifications given in Section D.5.

5. Record the Frequency and Signal Generator setting at each frequency for use during the actual immunity test.

6. Repeat steps using an electric field probe located off the end of the dipole.

If the dipole has a broadband matching section, check that the VSWR is within the specified VSWR over the test band. Tune the dipole or adjust the matching section, if necessary, to achieve better matching.

C.5 Calibration of hearing aid probe coil

Deleted: Hearing

Deleted: Aid

Deleted: Probe

Deleted: Coil

The Helmholtz coil, built in accordance with IEEE Standard 1027 (see Section D.9), is required to calibrate the hearing aid probe coil. The calibration procedure, from Section 5 of IEEE Standard 1027 is contained in Section D.9.

Metal parts, including fixtures for holding the probe coil, should not be near the Helmholtz coils during calibration. Connection to the probe coil should only be made by twisted leads or a thin shielded wire. The Helmholtz coils should not be located near sources of magnetic fields such as transformers.

DRAFT
Copyright © 2006 IEEE. All rights reserved.
This is an unapproved IEEE Standards Department Draft, subject to change.

Copyright The Institute of Electrical and Electronics Engineers, Inc.
Provided by IHS under license with IEEE
No reproduction or networking permitted without license from IHS
Not for Resale

To calibrate, establish a known magnetic field at the center of the Helmholtz coils. A constant current should be maintained to the Helmholtz coils at all frequencies of measurement. Insert the probe coil in the field and align its main axis with the field by adjusting its position for maximum output. The coil sensitivity can then be determined at any frequency by using *the following*
equation:

$$P(f) = 20 \log [Vp(f) / Hc]$$

where
P(f) = the probe coil sensitivity vs. frequency in dB V/(A/m)
Vp(f) = the output voltage of the probe coil in volts
Hc = the magnetic field strength generated by the Helmholtz coils in amperes per meter (A/m)
P(1000), the probe coil sensitivity at 1000 Hz, should be measured first.

The probe coil sensitivity ideally increases at a rate of 6 dB per octave with increasing frequency as expressed in:

$$P(f) = P(1000) - 20 \log (f / 1000 \text{ Hz})$$

where
$P(1000)$ = the probe sensitivity at 1000 Hz in dB V / (A/m)
f = frequency in hertz

The sensitivity shall not deviate from this characteristic by more than 0.5 dB, as illustrated by IEEE 1027- figure 5 and shown as follows:

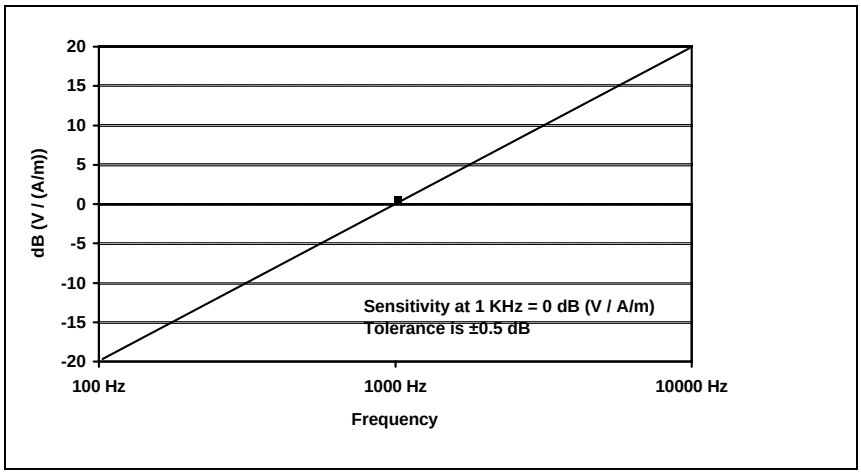

Figure C-4 - Probe coil sensitivity

C.5.1 Linearity

Check the system for amplitude linearity, vary the current through the Helmholtz coil to establish fields from -50 dB to 0 dB relative to 1 A/m in 10 dB steps. Check that the output varies in corresponding 10 dB steps (± 0.5 dB).

C.5.2 Signal to noise ratio of the calibration system

Set the current in the Helmholtz coils to create a field of -50 dB relative to 1 A/m. Note the output reading of the probe coil. Turn off the current to the Helmholtz coils and ensure the output drops at least 10 dB.

Deleted: Noise
Deleted: Ratio
Deleted: Calibration
Deleted: System

DRAFT
Copyright © 2006 IEEE. All rights reserved.
This is an unapproved IEEE Standards Department Draft, subject to change.

--`,,```,,,,````-`-`,,`,,`,`,,`---

Copyright The Institute of Electrical and Electronics Engineers, Inc.
Provided by IHS under license with IEEE
No reproduction or networking permitted without license from IHS
Not for Resale

C.5.3 Coil sensitivity

Deleted: Sensitivity

C.5.3.1 Coil sensitivity - calculation method

Deleted: Sensitivity

Deleted: Calculation

Deleted: Method

It is possible to calculate the probe coil sensitivity from the following series of equations as described in IEEE 1027 - Annex B:

For a magnetic field strength of H amperes per meter, the magnetic flux density is:

$$B = \mu H \ [\mathrm{Wb/m^2}] \qquad \text{(Eq. C1)}$$

where

$\mu = 4\pi\ 10^{-7}$ henry per meter = permeability of free space

For a coil of area S, the magnetic flux through the coil is:

$$\phi = B \bullet S \ [\mathrm{Wb}] \qquad \text{(Eq. C2)}$$

Faraday's Law states that the electrical output from a coil placed perpendicularly to a varying field is:

$$v = N\, d\phi/dt \ [\mathrm{volts}] \qquad \text{(Eq. C3)}$$

where

N = number of turns on the coil.

Combining equations C1, C2, and C3 for a coil placed perpendicular to the field gives:

$$v = N\, \mu S\, dH/dt [\mathrm{volts}] \qquad \text{(Eq. C4)}$$

For a sinusoidally varying magnetic field, the magnetic field strength is:

$$H = H\sin(\omega t), [\mathrm{A/m}]$$

where

H = peak amplitude of the field

so $$dH/dt = H\omega\cos(\omega t) \qquad \text{(Eq. C5)}$$

Therefore, the electrical output from a coil placed perpendicular to a sinusoidal field of **H** amperes per meter is:

$$v = N\, \mu S \omega\, H\cos(\omega t), [\mathrm{volts}] \qquad \text{(Eq. C6)}$$

Equation C6 shows that the output is proportional to ω, that is, proportional to frequency as evident in Figure C-4.

C.5.3.2 Coil sensitivity - laboratory calibration

Deleted: Sensitivity

Deleted: Laboratory

Deleted: Calibration

However, for practical multi-layer coils, and certainly for coils with magnetic material cores, better accuracy can be expected by inserting the coil in a known magnetic field and measuring the output.

One method of establishing a known magnetic field is to use a pair of Helmholtz calibration coils as shown in Section D.9. A set of Helmholtz coils consists of two circular coils of equal diameter and equal number of turns parallel to each other along an axis through the center of the coils, separated by a distance equal to the radius of the coils. Thus the two coils of the Helmholtz coil have equal radii and their centers lie on a common axis. For multiple turn coils, the diameter of the winding on each coil is much smaller than the diameter of the coil. The two coils are connected in series aiding in order to produce a nearly uniform magnetic field in a region surrounding the center point of the axis between the two coils. (The coils can be connected in parallel aiding, but the current in the coils shall be kept equal).

The use of Helmholtz coils for probe or sensor calibration is summarized as follows:

1. Helmholtz coils may be used to volumes with dimensions of 0.6r (r is the radius of the coil) for highly accurate probe or sensor calibration;

DRAFT
Copyright © 2006 IEEE. All rights reserved.
This is an unapproved IEEE Standards Department Draft, subject to change.

Copyright The Institute of Electrical and Electronics Engineers, Inc.
Provided by IHS under license with IEEE
No reproduction or networking permitted without license from IHS
Not for Resale

2. Helmholtz coils should be used in series-aiding connection, but may be used in parallel-aiding connection if necessary-with extra current controls and precautions;
3. Balance the products NI in the two coils for maximum accuracy; (N = number of turns on each coil; I = current in the coils, in amperes); and,
4. Consider Helmholtz coils a primary standard: they can be calibrated by a ruler.

C.6 Selection and calibration of acoustic transmission line (Informative)

C.6.1 Selection of acoustic transmission line

Several methods are available for providing an acoustic transmission line from the hearing aid under test to the measurement instrumentation. Undamped transmission line commonly has unacceptably large variation in its transmission loss over frequency. Adding a 1500 Ω damper is recommended to significantly smooth the loss response as a function of frequency. A 1 m damped acoustic transmission line, commonly called a damped "long horn", is recommended for larger separations. This device is constructed of 600 mm of 2 mm tubing, which connects to the hearing aid. At the end, away from the hearing aid a 680 Ω damper is inserted to smooth the transition to a 400 mm length of 3 mm tubing. At the end of the 3 mm tubing a 330 Ω is inserted and transitions to a 18 mm length of 4 mm tubing. The 4 mm tubing then connects to the ear coupler and measurement instrumentation (See Figure C-4).

Deleted: Calibration
Deleted: Acoustic
Deleted: Transmission
Deleted: Line
Deleted: INFORMATIVE
Deleted: Acoustic
Deleted: Transmission
Deleted: Line

DRAFT
Copyright © 2006 IEEE. All rights reserved.
This is an unapproved IEEE Standards Department Draft, subject to change.

Copyright The Institute of Electrical and Electronics Engineers, Inc.
Provided by IHS under license with IEEE
No reproduction or networking permitted without license from IHS
Not for Resale

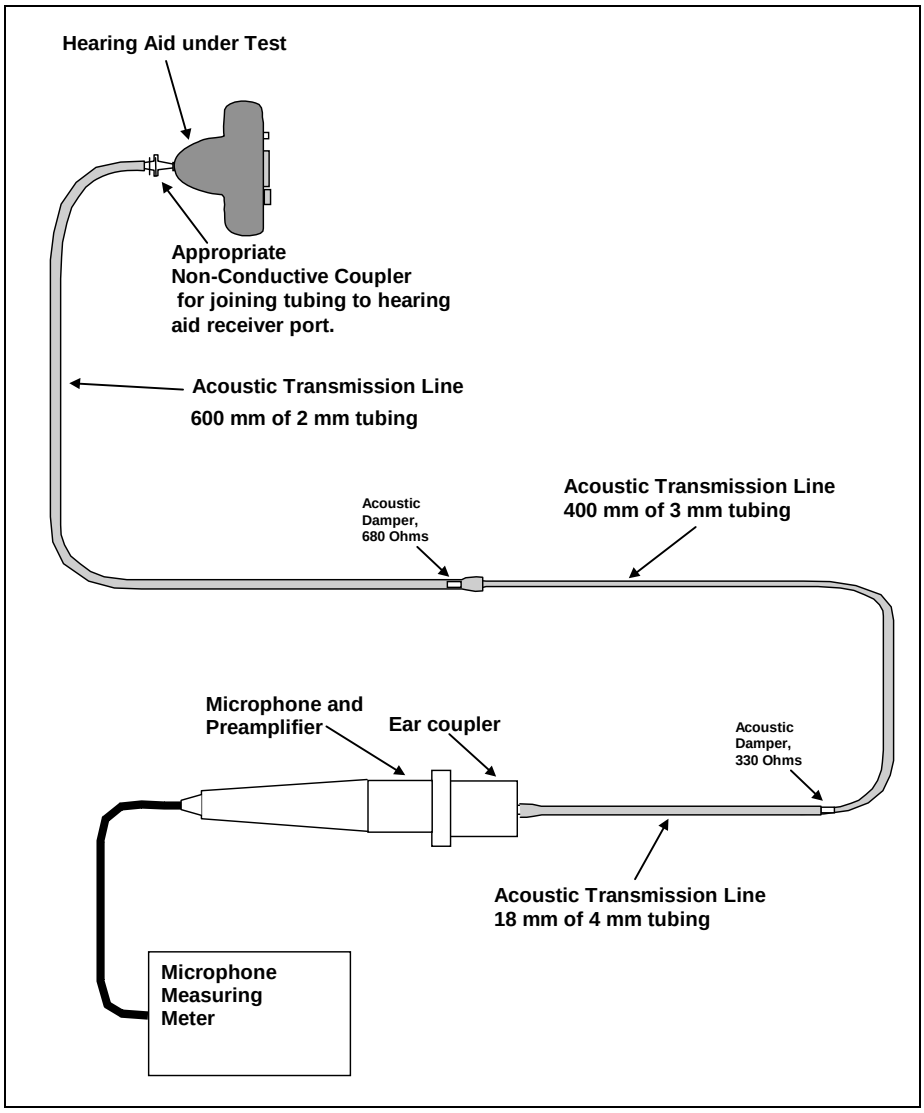

Figure C-5 - Construction of 1 m damped "Long Horn" acoustic transmission line

C.7 Microphone subsystem requirements

Deleted: Subsystem

Deleted: Requirements

The microphone subsystem, which is comprised of the Pressure-Field Microphone, Preamplifier, Ear Coupler, and Measuring Amplifier shall meet the requirements of ANSI S3.22-1996 paragraphs 4.7 and 4.7.1. The pressure frequency response of the microphone used with the earphone coupler, along with its amplifier and readout device, shall be uniform within +/- 1 dB over the frequency range 200-5000 Hz. The calibration of the microphone subsystem shall be accurate at any frequency between 250 and 1000 Hz to within +/- 1 dB.

DRAFT
Copyright © 2006 IEEE. All rights reserved.
This is an unapproved IEEE Standards Department Draft, subject to change.

Copyright The Institute of Electrical and Electronics Engineers, Inc.
Provided by IHS under license with IEEE
No reproduction or networking permitted without license from IHS
Not for Resale

Annex D. Test equipment specifications - (Normative)

Deleted: Equipment
Deleted: Specifications
Deleted: NORMATIVE

D.1 Acoustic damper

Deleted: Damper

Acoustic Damper of specified impedance:

330 or
680 or
1500 Ohms

D.2 Audio frequency analyzer or wave analyzer

Deleted: Frequency
Deleted: Analyzer
Deleted: Wave
Deleted: Analyzer

a) Frequency Range: 20 Hz - 20 kHz
b) Resolution Bandwidth: 3 to 300 Hz in 1-3-10 steps
c) Input Amplitude Range: 1 mV rms to 30 V rms
d) Input Impedance: 1 Mohm shunted by up to 30 pF
e) Dynamic Range: > 80 dB
f) Spurious Responses: at least 80 dB below input reference level
g) Amplitude Accuracy: +/- 0.5 dB

D.3 Audio signal generator

Deleted: Signal
Deleted: Generator

Frequency Range:	20 Hz - 20 kHz
Output:	> = 1.0 V rms into 50 Ohms
Distortion:	< = 1%
Output impedance:	600 ohms
Frequency Range:	up to at least 4 kHz
Maximum Output level:	≥ 40 dBm sinusoidal

D.4 Bandpass filter

Deleted: Filter

Input impedance:	≥100 kohm
Bandpass:	200 Hz to 10 kHz
Out-of-Band roll-off:	≥ 24 dB per octave

D.5 Dipole, resonant

Deleted: Resonant

The dipoles to be used for these tests are resonant balanced half-wave dipoles tuned for maximum free space radiation in the specified resonant frequency band. Each dipole shall be preliminarily scanned at a 5 mm distance along its axis with an H-Field probe to check the balance of the currents on the two arms of the radiator. Current amplitude and distribution along each arm shall be within ±3% between each arm. The gain of the dipole, as measured in an anechoic chamber using the method of identical antennas, is 1.8 dBi, ±0.5dB.

Resonant Frequency:	Between 800 - 950 MHz or 1.6 - 2.5 GHz
Insertion Loss:	< 0.5 dB over 800 - 950 MHz or 1.6 - 2.5 GHz, as applicable.
VSWR:	≤1.92:1over 800 - 950 MHz or 1.6 - 2.5 GHz, as applicable. (Referenced to 50 ohms.)
Balance:	≤ ±3%
Gain:	1.8 dBi, ±0.5 dB
Element Diameter	3.58 mm nominal o.d. (Note: this is the o.d. of RG-402U semi-rigid coax.)

DRAFT
Copyright © 2006 IEEE. All rights reserved.
This is an unapproved IEEE Standards Department Draft, subject to change.

Copyright The Institute of Electrical and Electronics Engineers, Inc.
Provided by IHS under license with IEEE
No reproduction or networking permitted without license from IHS
Not for Resale

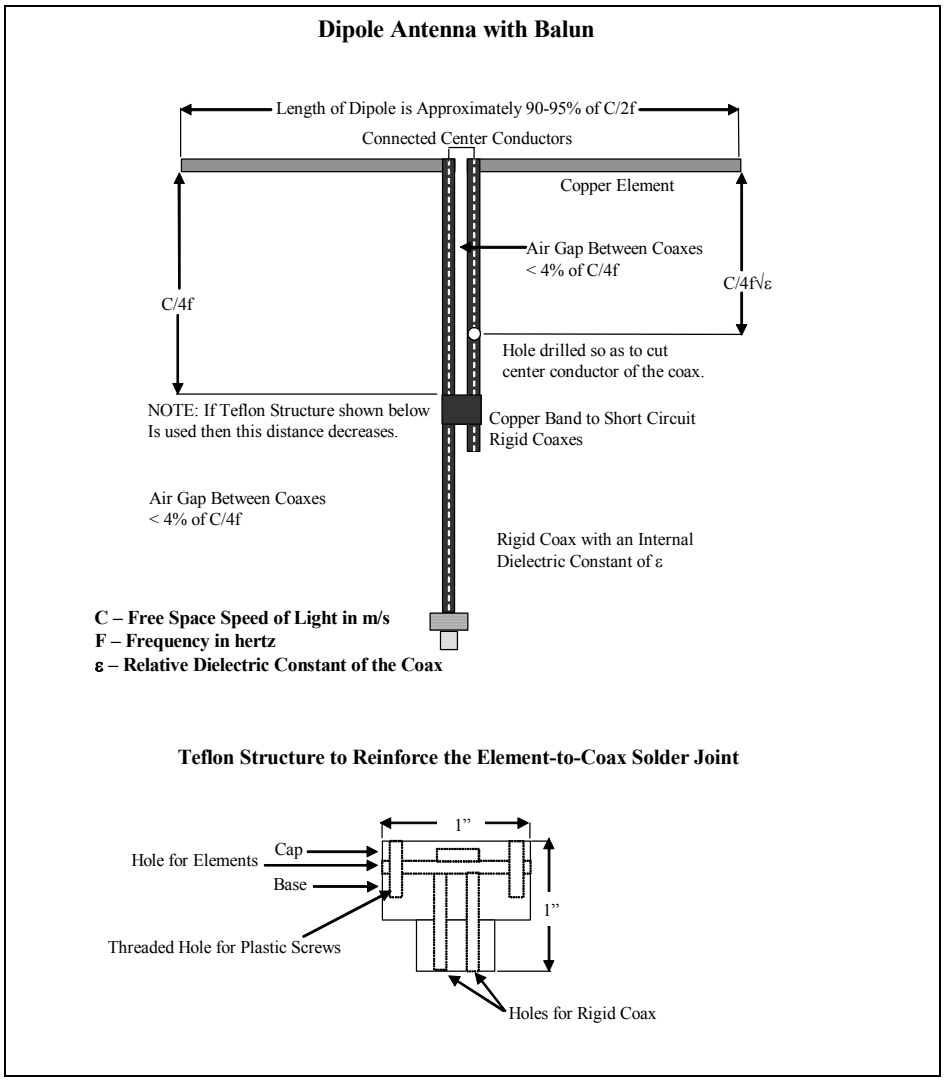

Figure D-1 - Balanced dipole antenna

DRAFT
Copyright © 2006 IEEE. All rights reserved.
This is an unapproved IEEE Standards Department Draft, subject to change.

Copyright The Institute of Electrical and Electronics Engineers, Inc.
Provided by IHS under license with IEEE
No reproduction or networking permitted without license from IHS
Not for Resale

D.5.1 Broadband dipoles

Deleted: Dipoles

D.5.1.1 Dipoles for 800 to 950 MHz

For the band from 800 MHz to 950 MHz, a thick dipole (RG-402U, 3.58 mm dia.) cut for resonance between approximately 880 – 900 MHz has a worst-case VSWR ≈ 1.6 in a 50 Ω system ($P_R \leq 5.3$ %) without any matching section, *i.e.*, only a balun. This is because the fractional bandwidth is relatively small. The resonant length for this dipole is 161.2 mm or approximately 161 mm. This causes the dipole to resonate at ≈890 MHz.

D.5.1.2 Dipoles for 1.6 to 2.5 GHz

WD bands range from 1.6 GHz to 2.5 GHz. This expanded frequency range can be covered by a single dipole, as described in this section. While one could build a set of tuned dipoles to cover all of the wireless device frequencies, it is probably more economical to build a single broadband dipole for this range.

[Note: The dipole specified in D.5.1.1for the range 800 MHz to 950 MHz is already a broadband dipole.]

Resonant dipoles that are thick, *i.e.*, have length-to-diameter ratios of less than 100, have impedance characteristics that change very slowly with frequency. If these dipoles are mismatched at the resonant frequency, they may be used with acceptable VSWR over wide bands of frequencies, while retaining the characteristics of resonant dipoles. The dipole is tuned to be resonant at the center of the band of *wavelengths* to be used, and the matching section (often also a balun) is designed to provide transformation from 50 ohms to the geometric mean of the maximum and minimum impedances that is presented by the feed-point of the dipole.

If a dipole made of 3.58 mm diameter stock (RG-402U) is cut to resonate at 1.92 GHz and fed by a 50 Ω to 83 Ω matching transformer/balun, the worst-case VSWR is less than 1.7. This implies reflected power of approximately 6.7 %. A resonant frequency of 1.92 GHz in such a thick dipole results from a length of 73.8 mm or approximately 74 mm. Some experimentation may be needed, so the dipole should be cut too long to begin with and shortened as necessary.

[Note: Since "lumped-element" transformers are difficult to realize at these frequencies, other approaches are needed. Some approaches, among others, may be transmission line combinations,[4] micro-strip on printed circuit board material, and other similar transformer realizations on PC boards.]

If only the bands from 1.6 GHz to 2.5 GHz are to be covered, a thick dipole cut to resonate at 1.85 GHz has a VSWR < 1.5 when operated in a 50 Ω system, resulting in $P_R \approx 4$ %. The physical length of the dipole made of RG-402U resonant at 1.85 GHz is 76.5 mm or approximately 76 mm.

Deleted: Device

Deleted: Dipoles

D.5.1.3 Wireless device lab verification dipoles

Dipoles have proven to be a very accurate method for assessing the conformity of a measurement system; however, target values must be specified.

[4] See, for example, Frank Witt, "A Simple Broadband Dipole for 80 Meters," *QST*, September 1993, p 27. While this article is written around antennas for 4 MHz, a similar approach may be taken at 2 GHz.

DRAFT
Copyright © 2006 IEEE. All rights reserved.
This is an unapproved IEEE Standards Department Draft, subject to change.

Copyright The Institute of Electrical and Electronics Engineers, Inc.
Provided by IHS under license with IEEE
No reproduction or networking permitted without license from IHS
Not for Resale

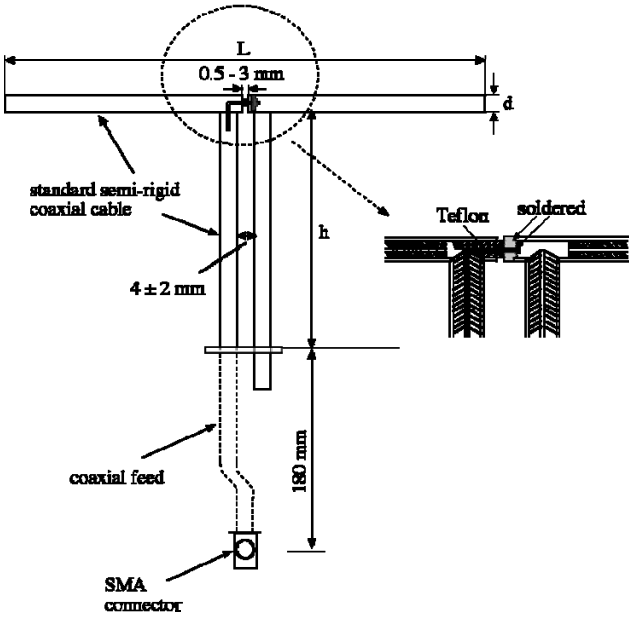

Figure D-2 - Mechanical details of the reference dipole

Parameter	Parameter value
Length (L mm)	161[5]
Diameter (d mm)	3.58 (e.g. RG-402U)
Height ¼ λ Stub (h mm)	89.8
RL Requirement	<-10 dB
Frequency Range (MHz)	*790-850*
VSWR	1:1.92[6]
Resonant Frequency (MHz)	*825*
Impedance	Nominal 50 Ω

Table D-1 – Dipole for 813.5 MHz and 835 MHz, tuned for air

Parameter	Parameter value
Length (L mm)	149
Diameter (d mm)	3.58 (e.g. RG-402U)
Height ¼ λ Stub (h mm)	83.3

[5] The length of both sides of dipole should be within 2% of each other for all dipoles, Table D-1 through Table D-3.

[6] The VSWR stated in Table D-1 through Table D-3 is for the resonant frequency.

DRAFT
Copyright © 2006 IEEE. All rights reserved.
This is an unapproved IEEE Standards Department Draft, subject to change.

Copyright The Institute of Electrical and Electronics Engineers, Inc.
Provided by IHS under license with IEEE
No reproduction or networking permitted without license from IHS Not for Resale

RL Requirement	<-10 dB
Frequency Range (MHz)	*870-955*
VSWR	1:1.92
Resonant Frequency (MHz)	*910*
Impedance	Nominal 50 Ω

Table D-2 – Dipole for 898.5 MHz, tuned for air

Parameter	Parameter value
Length (L mm)	72
Diameter (d mm)	3.58 (e.g. RG-402U)
Height ¼ λ Stub (h mm)	41.7
RL Requirement	<-10 dB
Frequency Range (MHz)	*1745 to 1935*
VSWR	1:1.92
Resonant Frequency (MHz)	*1855*
Impedance	Nominal 50 Ω

Table D-3 – Dipole for 1880 MHz, tuned for air

D.5.1.4Dipole validation theoretical modeling

Deleted: Validation

Deleted: Theoretical

Deleted: Modeling

The Finite Difference Time Domain (FDTD) method is a numerical algorithm for solving Maxwell's equations of electromagnetic field interactions in the time domain by converting the problem space into discrete unit cells where the space and time derivatives of the electric and magnetic fields are directly approximated by simple, second-order, accurate, central-difference equations.

The ability of FDTD to calculate radiation patterns, input impedance, and absolute gain for a dipole antenna has been demonstrated. An ideal complex dipole model consisting of the typical radiating and balun elements is constructed using a rectangular Yee cell problem space of XYZ (196,155,262) with a 1.0 mm cubic cell dimension. For the FDTD calculations the dipole is fed at the geometric center of symmetry with a sinusoidal voltage of 20.7 V maximum amplitude to produce an input power of 1.0 W. Results of computation were scaled down to correspond with 100 mW input power (net power after compensating for the return loss).

D.5.1.4.1 Dipoles

The dipoles used for this analysis were modeled as resonant balanced half-wave dipoles tuned for maximum free-space radiation in the specified resonant frequency band. There were no additional matching elements except for the standard λ/4 balun to provide transformation from symmetrical to non-symmetrical feed (see Figure D-1). The dimensions for modeling were obtained from the actual dipoles used in SAR system validation (cylindrical structures realized from 3.58 mm thick RG-402U semi-rigid cable).

In practice each dipole should be preliminarily scanned at 10 mm distance along its axis with an H-field probe to check the balance of the currents on the two arms of the radiator. Current amplitude and distribution along each arm should be within ± 3 % between each arm.

Therefore, graphical presentation of field distribution along the dipole is also provided in this document.

DRAFT
Copyright © 2006 IEEE. All rights reserved.
This is an unapproved IEEE Standards Department Draft, subject to change.

Copyright The Institute of Electrical and Electronics Engineers, Inc.
Provided by IHS under license with IEEE
No reproduction or networking permitted without license from IHS
Not for Resale

Mod.	Freq. range (MHz)	Freq. (MHz)	$\frac{E_{Peak}}{E_{RMS}} = \frac{H_{Peak}}{H_{RMS}}$	CW Peak E (V/m)	CW Peak E (dB V/m)	CW Peak H (A/m)	CW Peak H (dB A/m)	$\lvert Z_0 \rvert = \sqrt{R^2 + X^2}$ (Ω)	Return loss (dB)	VSWR	Gain (dBi)
CW	806-821 SMR	813.5	1.414	268	48.6	0.680	-3.35	74.7	-10.0	1.925	2.25
CW	790-850 Cellular	835.0	1.414	265	48.5	0.673	-3.44	75.3	-12.0	1.671	2.32
CW	896-901 SMR	898.5	1.414	262	48.4	0.675	-3.41	75.5	-11.9	1.681	2.33
CW	1880-2000 PCS	1880.0	1.414	211	46.5	0.645	-3.81	87.1	-10.6	1.837	2.52
1	2	3	4	5	6	7	8	9	10	11	12

Table D-4 – Results of the FDTD modeling

D.5.1.4.1.1 Conditions for validation

- input signal: CW
- Average input power: P_{IN} = 100 mW = 20 dBm RMS(net power after compensating for the return loss)
- separation distance: from the top surface of the dipole to the nearest point on the probe element: d = 10 mm

D.5.1.4.1.2 Conclusion

These values may be used as target values for the dipole calibration procedure in section 4.2.2.1.[7] The target values presented in this document are the results from theoretical modeling using the FDTD method.

In columns 5 and 6 of Table D-4 are presented peak values of the maximum E-field obtained by the FDTD method for the above conditions. These values should be used as target values when measuring E-field along the validation dipole.

In columns 7 and 8 of Table D-4 are presented peak values of the maximum H-field obtained by the FDTD method for the above conditions. These values should be used as target values when measuring H-field along the validation dipole.

Based on the results in columns 10 and 11 of Table D-4 the specifications for the return loss and VSWR of the dipole should remain -10 dB and 1:1.92, respectively.

Gain computation by the FDTD method does not take in account losses in the dipole associated with the resistance and skin effect. These losses have to be subtracted from the theoretically obtained gain values. In frequency range 806-821 MHz, 790-850 MHz and 896-901 MHz the losses are estimated to be ~ 0.5 dB and in the 1880-2000 MHz frequency range they are more likely to be 0.6-0.7 dB. Therefore the required gain for validation dipoles should be specified as: 1.8 ± 0.5 dB.

NOTE: The separation distance is measured from the top surface of the dipole to the nearest point on the probe element, and is d = 10 mm.

[7] The values presented apply only to dipoles constructed per the example given. Small variations in design can cause variation in these values. Therefore, different reference values can be used if appropriate documentation is provided.

DRAFT
Copyright © 2006 IEEE. All rights reserved.
This is an unapproved IEEE Standards Department Draft, subject to change.

Copyright The Institute of Electrical and Electronics Engineers, Inc.
Provided by IHS under license with IEEE
No reproduction or networking permitted without license from IHS
Not for Resale

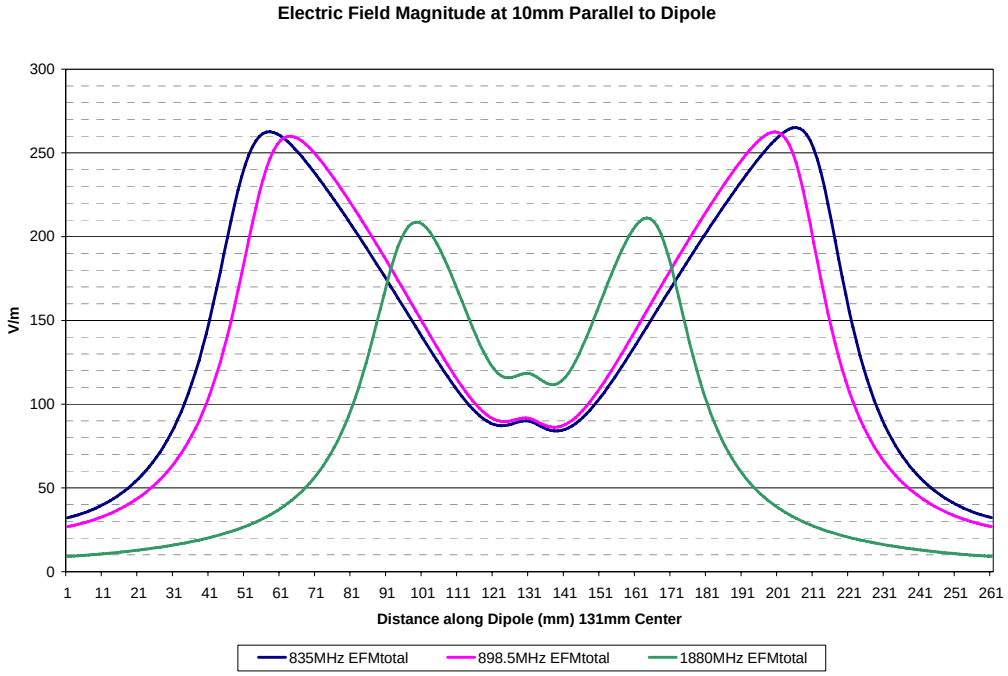

Figure D-3 - E-Field distribution along dipole elements

NOTE: In Figure D-3 the electric field distribution along the dipoles at 10 mm distance was obtained by the FDTD method. Simulation was done with 1 W input RF power and the results were scaled down to obtain the peak values of the E-field that correspond to 100 mW input power (net power after compensating for the return loss).

DRAFT
Copyright © 2006 IEEE. All rights reserved.
This is an unapproved IEEE Standards Department Draft, subject to change.

--`,,```,,,,````-`-`,,`,,`,`,,`---

Copyright The Institute of Electrical and Electronics Engineers, Inc.
Provided by IHS under license with IEEE
No reproduction or networking permitted without license from IHS
Not for Resale

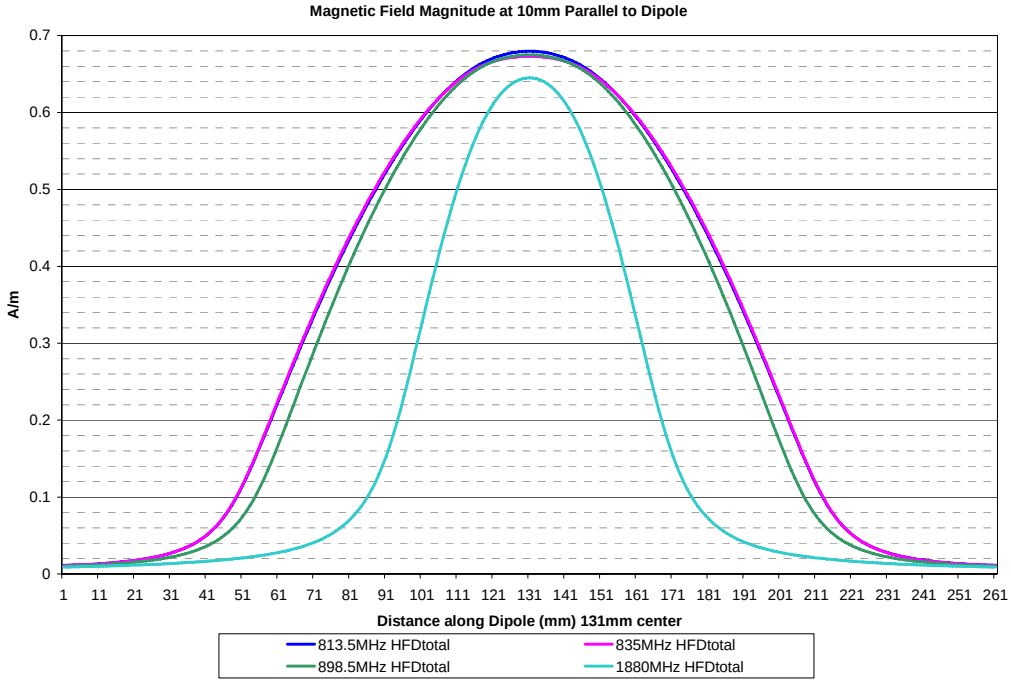

Figure D-4 - H-Field distribution along dipole elements

NOTE: In Figure D-4 the magnetic field distribution along the dipoles at 10 mm distance was obtained by the FDTD method. The simulation was done with 1 W input RF power and the results were scaled down to obtain the peak values of the H-field that correspond to 100 mW input power. (net power after compensating for the return loss).

DRAFT
Copyright © 2006 IEEE. All rights reserved.
This is an unapproved IEEE Standards Department Draft, subject to change.

Copyright The Institute of Electrical and Electronics Engineers, Inc.
Provided by IHS under license with IEEE
No reproduction or networking permitted without license from IHS
Not for Resale

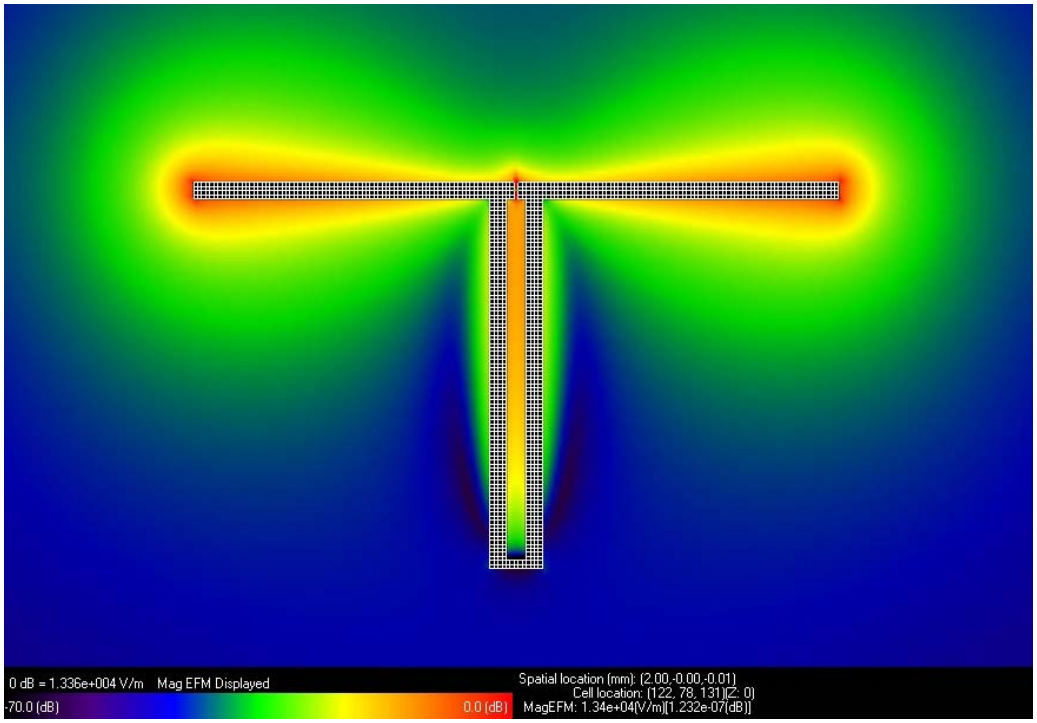

DRAFT
Copyright © 2006 IEEE. All rights reserved.
This is an unapproved IEEE Standards Department Draft, subject to change.

Copyright The Institute of Electrical and Electronics Engineers, Inc.
Provided by IHS under license with IEEE
No reproduction or networking permitted without license from IHS
Not for Resale

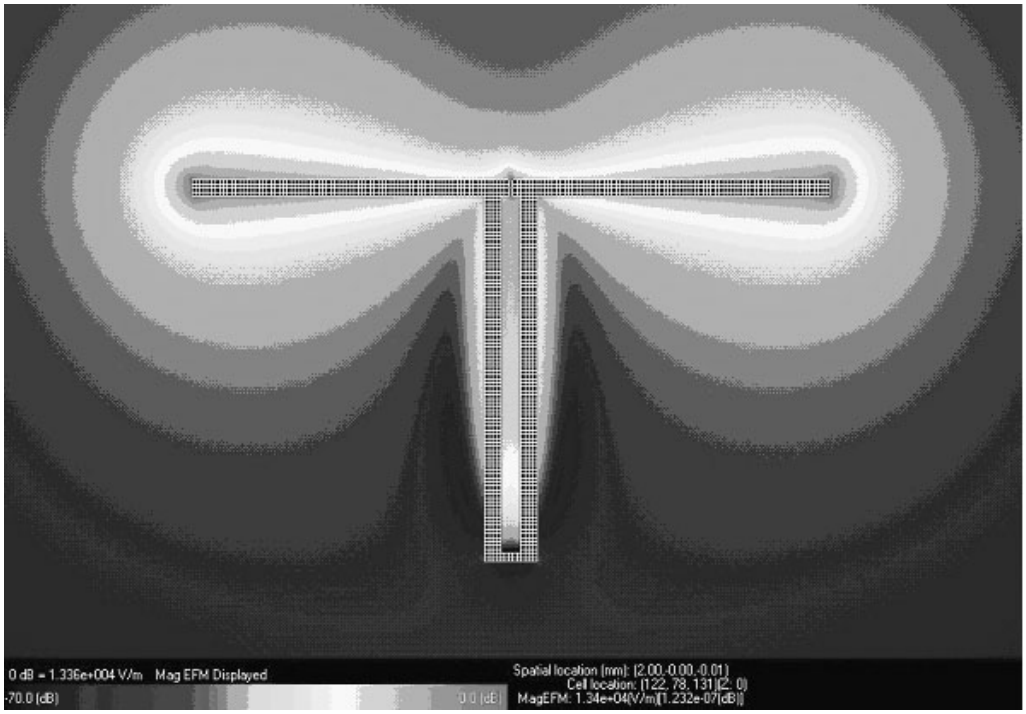

Figure D-5 - E-Field distribution around λ /2 dipole

DRAFT
Copyright © 2006 IEEE. All rights reserved.
This is an unapproved IEEE Standards Department Draft, subject to change.

Copyright The Institute of Electrical and Electronics Engineers, Inc.
Provided by IHS under license with IEEE
No reproduction or networking permitted without license from IHS
Not for Resale

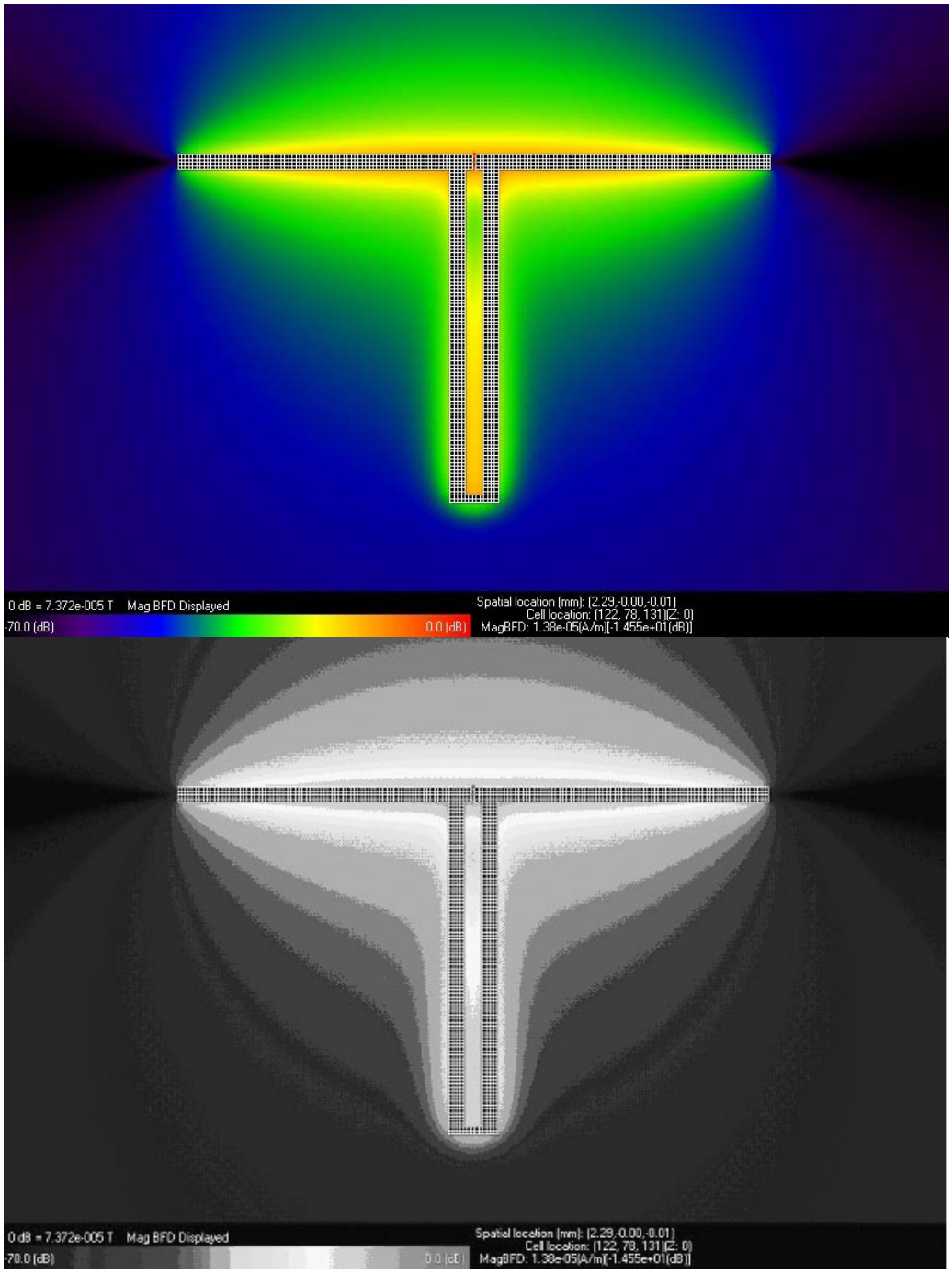

DRAFT

Copyright © 2006 IEEE. All rights reserved.
This is an unapproved IEEE Standards Department Draft, subject to change.

--`,,```,,,,````-`-`,,`,,`,`,,`---

Copyright The Institute of Electrical and Electronics Engineers, Inc.
Provided by IHS under license with IEEE
No reproduction or networking permitted without license from IHS Not for Resale

Figure D-6 - H-field distribution around λ /2 dipole

D.5.2 Example planar broadband dipoles

Deleted: Planar
Deleted: Broadband
Deleted: Dipoles

A planar dipole fabricated on a low loss printed circuit board, such as that shown in Figure D-7 and Figure D-8, is an alternative to a wire dipole like that described in Section D.5.1, for calibration of field probes used for near field RF measurements per Section 4. It has the advantages of being readily implemented, is very robust and very cost effective. Construction information is provided for a design in the drawing of Figure D-8, and Equation D-1 should be used for other bands above 700 MHz. Performance data is provided in sections D.5.2.1 and D.5.2.2.

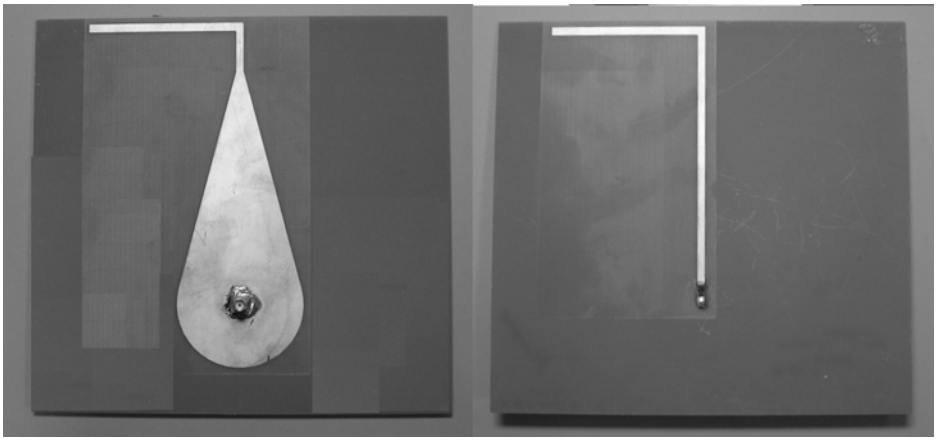

Figure D-7 - Front and back sides of planar dipole (dipole 'B' in D.5.2 and Figure D-9)

Deleted: Error! Reference source not found.

DRAFT
Copyright © 2006 IEEE. All rights reserved.
This is an unapproved IEEE Standards Department Draft, subject to change.

Copyright The Institute of Electrical and Electronics Engineers, Inc.
Provided by IHS under license with IEEE
No reproduction or networking permitted without license from IHS
Not for Resale

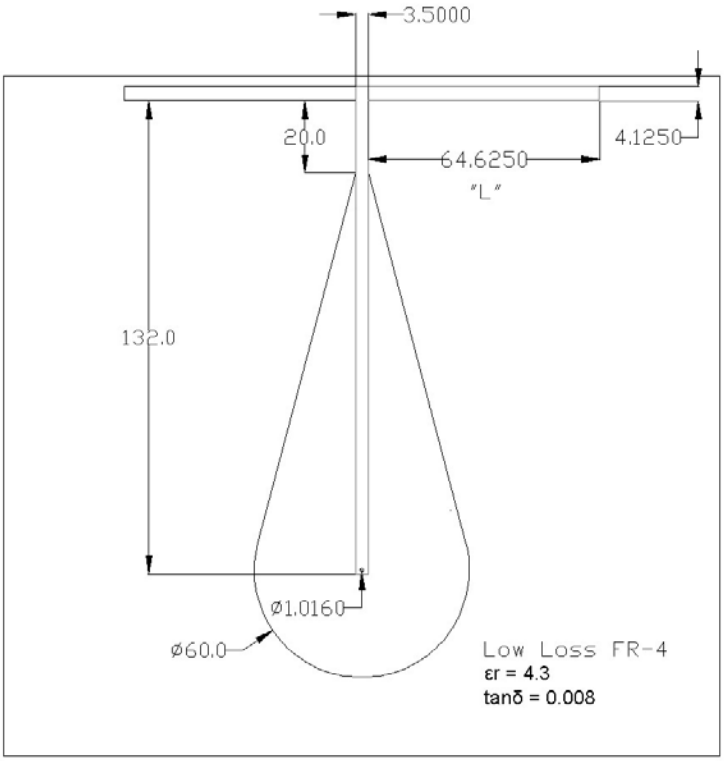

Figure D-8 – Dimensions of dipole 'B' in D.5.2 and Figure D-9 (in mm)

Deleted: Error! Reference source not found.

To adapt this design for other bands, the dipole arm length that determines the resonant frequency can be calculated using the following formula:

$$L_{Freespace} = 81\frac{\lambda_0}{4} \qquad \text{D-1}$$

$L_{Freespace}$ = *Length of dipole arm for tuning in freespace in mm. Shown as "L".*

An alternate form of the equation is:

$$L_{Freespace} = \frac{6075}{f} \qquad \text{D-2}$$

In this form of the equation f is the frequency in MHz and $L_{Freespace}$ is again in mm.

DRAFT
Copyright © 2006 IEEE. All rights reserved.
This is an unapproved IEEE Standards Department Draft, subject to change.

Copyright The Institute of Electrical and Electronics Engineers, Inc.
Provided by IHS under license with IEEE
No reproduction or networking permitted without license from IHS
Not for Resale

For all frequencies above 700 MHz, the dimensions of the broadband balun (the tapered microstrip section) remains constant.[8]

D.5.2.1 Example return loss performance data

A return loss (RL) of less than 5.3% or -12.75 dB is required to meet the VSWR specification, per Section D.5. With that criterion, only 3 dipoles were required to cover the frequency range prescribed in Section B.2. planar dipole A covers the 813 and 835 MHz range frequencies, planar dipole B covers the 898 MHz frequency, and planar dipole C covers the 1880 MHz frequency.

Note - In these examples the dipoles are not exactly tuned for the test frequencies. For better efficiency the dipoles could be more carefully tuned to match their resonant frequency to the test frequency.

			-12.75 dB BW		
Desired Freq	Dipole	Meas RL	Low Freq	High Freq	% BW
813	A	-21.287	785	855	-8.5%
835	A	-16.684			
898	B	-14.295	895	975	-8.6%
1880	C	-14.985	1790	1930	-7.5%

Table D-5 – The RL as a function of frequency

[8] M. Kanda, Richard, M., G. Bit-Babik, C. DiNallo, CK Chou. "A Rugged Printed Dipole Reference for SAR System Verification and Freespace Measurements Verifications," 28th Triennial General Assembly of the International Union of Radio Science, New Delhi, India. October 23-29, 2005.

Deleted: Return
Deleted: Loss
Deleted: Performance
Deleted: Data

Deleted: Richard, M., M. Kanda, G. Bit-Babik, C. DiNallo, CK Chou. A Rugged Microstrip Printed Dipole Reference for SAR System Verification. 2002 IEEE MTT-S International Microwave Symposium, Seattle, WA. June 2-7, 2002.

DRAFT
Copyright © 2006 IEEE. All rights reserved.
This is an unapproved IEEE Standards Department Draft, subject to change.

Copyright The Institute of Electrical and Electronics Engineers, Inc.
Provided by IHS under license with IEEE
No reproduction or networking permitted without license from IHS
Not for Resale

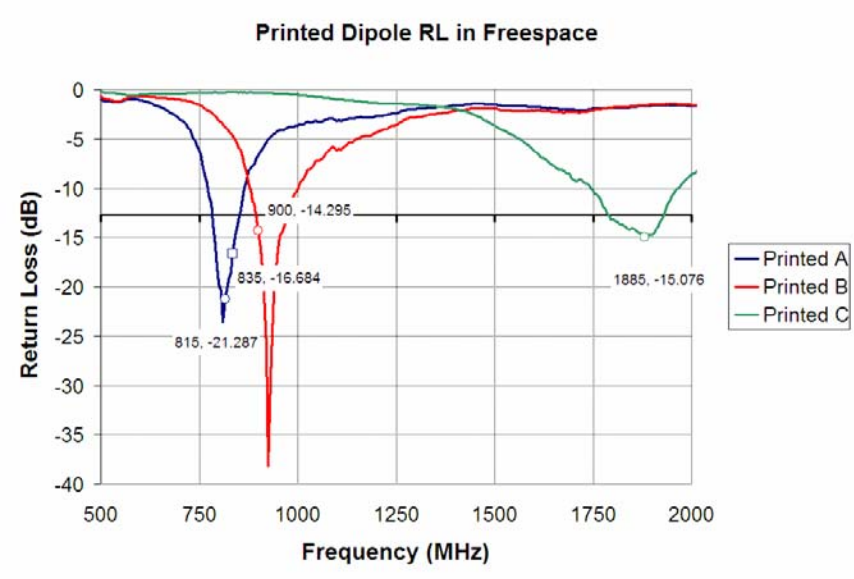

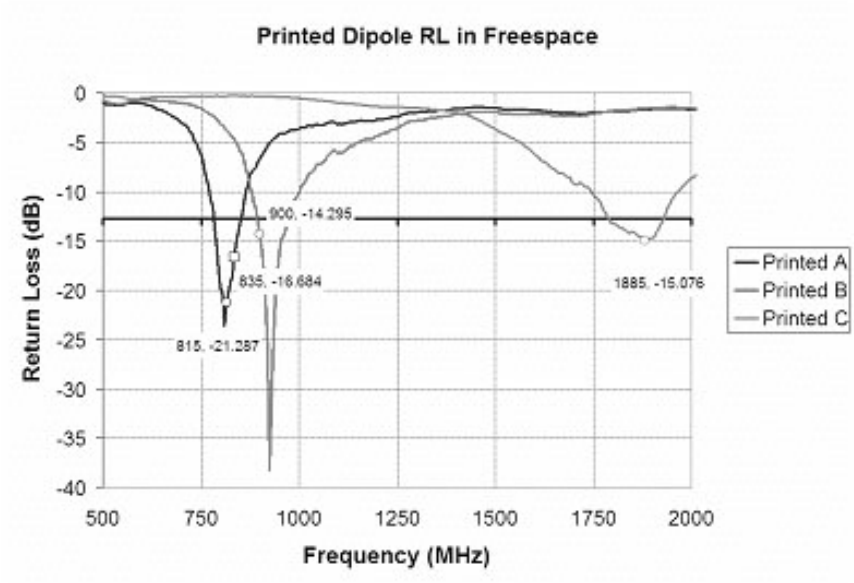

Figure D-9 - Example printed dipole tuning

Deleted: Printed
Deleted: Dipole
Deleted: Tuning

Copyright © 2006 IEEE. All rights reserved.
This is an unapproved IEEE Standards Department Draft, subject to change.

Copyright The Institute of Electrical and Electronics Engineers, Inc.
Provided by IHS under license with IEEE
No reproduction or networking permitted without license from IHS
Not for Resale

D.5.2.2 Balance

Balance data for the dipoles presented in this section as examples, are summarized inTable D-6 . Further work is recommended to improve balance of printed dipole A.

Printed dipole	A	B	C
Balance	3.2%	0.4%	1.3%

Table D-6 – Dipole balance

The degree of balance that can be obtained is evident by observing the symmetry in the following field strength plots obtained at a distance of 10 mm when a 100 mW CW signal was applied to the antenna at the specified frequency. The field strengths produced by that signal were measured and found to be comparable to those obtained with the thick dipoles.

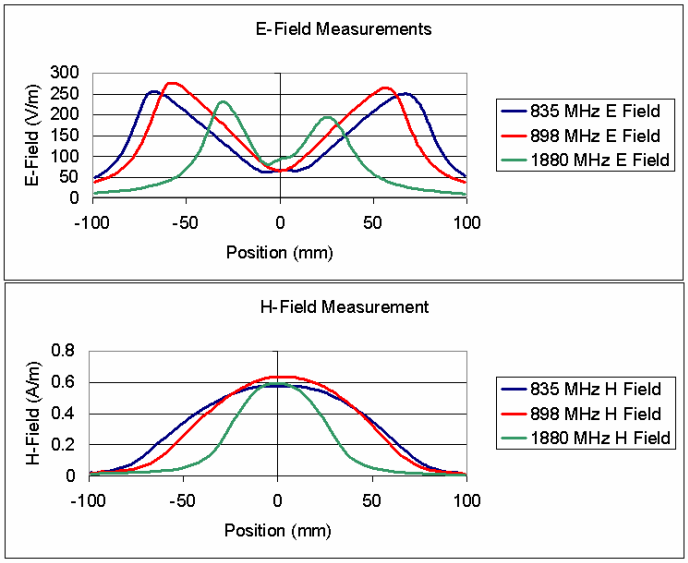

DRAFT
Copyright © 2006 IEEE. All rights reserved.
This is an unapproved IEEE Standards Department Draft, subject to change.

Copyright The Institute of Electrical and Electronics Engineers, Inc.
Provided by IHS under license with IEEE
No reproduction or networking permitted without license from IHS
Not for Resale

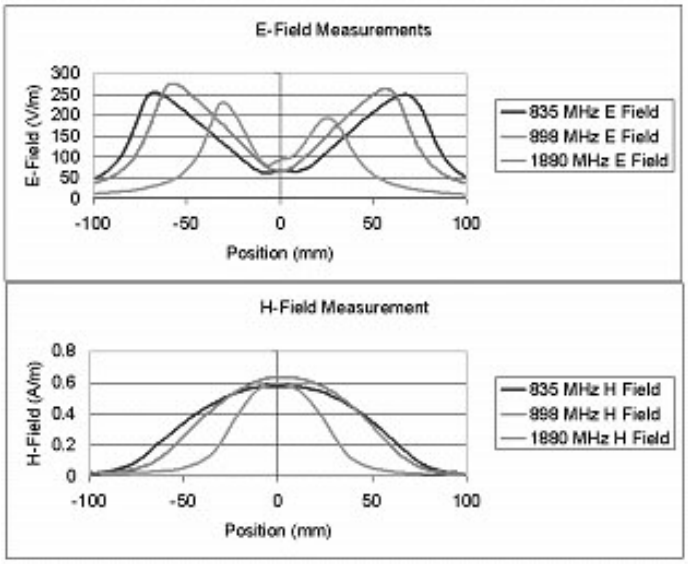

Figure D-10 – Dipole field distribution

D.6 Directional coupler

Deleted: Coupler

a) Coupling Factor: 20 dB
b) Directivity: minimum of 30 dB
c) Maximum Incident Power: Commensurate with RF Power Amplifier output, see D.14

Deleted: D.1

d) Impedance: 50 Ohms
e) Insertion Loss: 0.2 dB maximum
f) VSWR: 1.15 maximum
g) Connectors: Type N female
h) Frequency Range: 0.8 GHz to 3.0 GHz

D.7 Frequency generator

Deleted: Generator

Output impedance: 600 Ohms
Frequency Range : ≥ 10 kHz
Maximum Output Level : ≥ 40 dBm sinusoidal

D.8 Hearing aid probe coil

Deleted: Aid
Deleted: Probe
Deleted: Coil

(In accordance with FCC Part 68, and IEEE 1027-1996)

Maximum dimensions: 6.55 mm length X 2.29 mm diameter
DC Resistance: 900 Ω
Wire Size 51 AWG
Inductance: 140 mH at 1 kHz
Sensitivity: -60.5 dB (V / A/m) at 1 kHz
Sensitivity Tolerance: ±0.5 dB from the characteristics illustrated

DRAFT
Copyright © 2006 IEEE. All rights reserved.
This is an unapproved IEEE Standards Department Draft, subject to change.

Copyright The Institute of Electrical and Electronics Engineers, Inc.
Provided by IHS under license with IEEE
No reproduction or networking permitted without license from IHS
Not for Resale

Frequency	High limit	Low limit
100 Hz	-19.5 dB	-20.5 dB
10 kHz	20.5 dB	19.5 dB

Table D-7 – Hearing aid probe coil limits

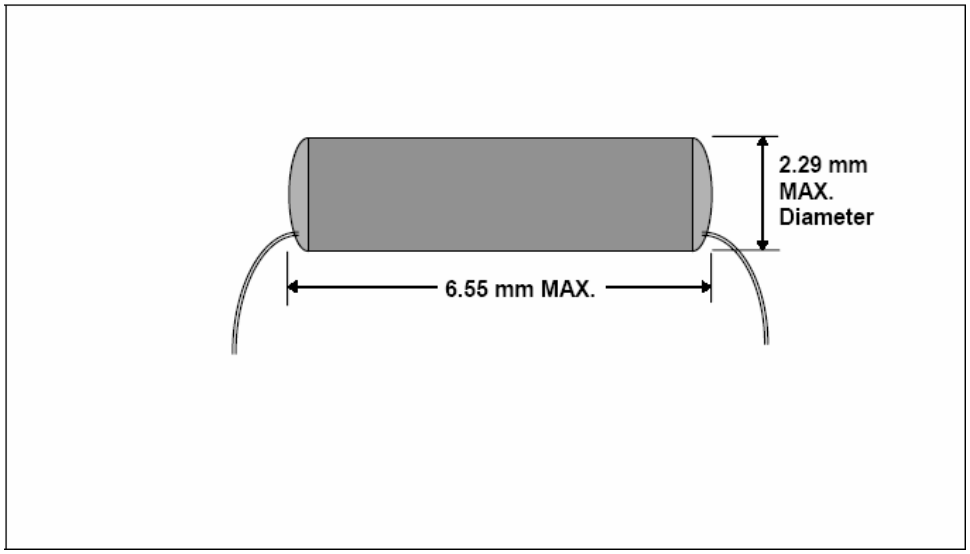

Figure D-11 - Typical hearing aid probe coil dimensions

D.9 Helmholtz calibration coils

Deleted: Calibration
Deleted: Coils

Refer to Section D.9.1 and Figure D-12, "Helmholtz Coil Diagram".

Radius 143 mm
Windings 20 turns of no. 24 AWG enameled magnet wire

D.9.1 Helmholtz coil magnetic field generation

Deleted: Coil
Deleted: Magnetic
Deleted: Field
Deleted: Generation

Helmholtz coils consist of a pair of identical coils wound in a series-aiding fashion, coaxially aligned and spaced a distance apart *that* is equal to their radius (See Annex F). The magnetic field at the center of such a pair of coils is axially directed with a strength given by:

$$H_C = \frac{NI}{r\sqrt{1.25^3}} \text{ [A/m]}$$

where

H_c = magnetic field strength in amperes per meter
N = number of turns per coil

DRAFT
Copyright © 2006 IEEE. All rights reserved.
This is an unapproved IEEE Standards Department Draft, subject to change.

Copyright The Institute of Electrical and Electronics Engineers, Inc.
Provided by IHS under license with IEEE
No reproduction or networking permitted without license from IHS
Not for Resale

I = current in amperes
r = coil radius in meters

The above equation assumes that all the turns on each coil can be considered to lie in the same place and have the same radius. In practice this means that the diameter of the wire bundle is much less than the diameter of the coil.

The coil parameters are such that the magnetic field strength is numerically equal to 100 times the current flowing through the coils. Thus, if a 100 Ω resistor is used to sense the current flow, the magnetic field strength is numerically equal to the voltage across this sensing resistor.

Nonmetallic materials should be used to construct the coil forms, base, and any supporting structure for locating probe coils that are to be calibrated. The method shown in this Annex of interconnecting the coils and bringing out the leads to binding posts on the end of the base minimizes any disturbing effects on the desired magnetic field.

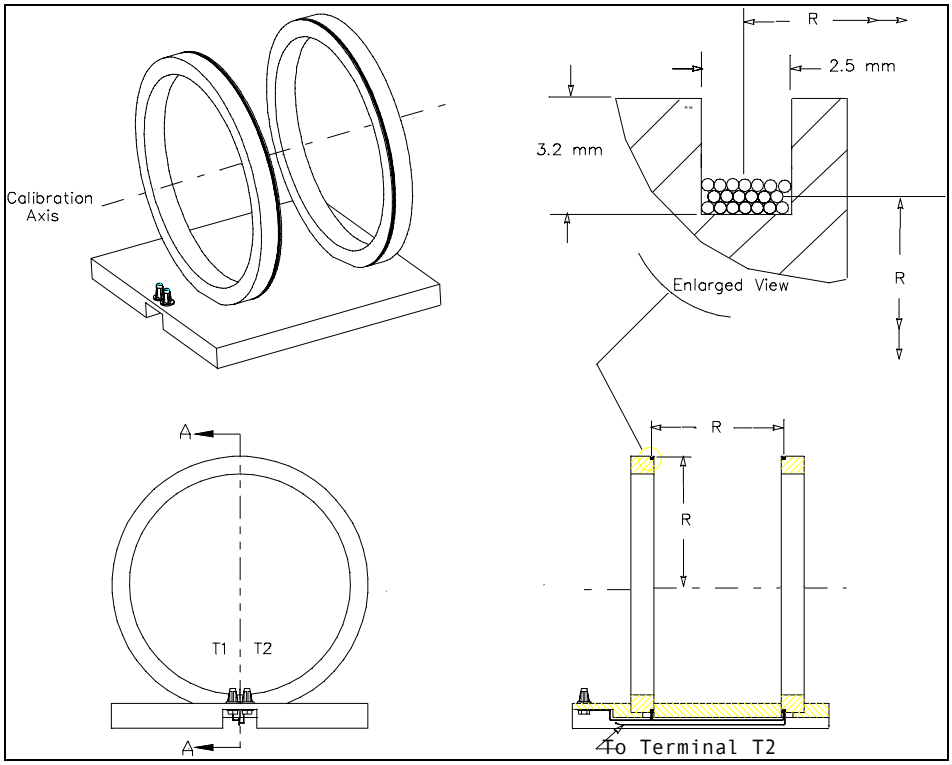

Figure D-12 - Helmholtz coil diagram

R = 143 mm
N = 20 Turns, AWG No 24 Enameled Magnet Wire, Per Coil

DRAFT
Copyright © 2006 IEEE. All rights reserved.
This is an unapproved IEEE Standards Department Draft, subject to change.

Copyright The Institute of Electrical and Electronics Engineers, Inc.
Provided by IHS under license with IEEE
No reproduction or networking permitted without license from IHS
Not for Resale

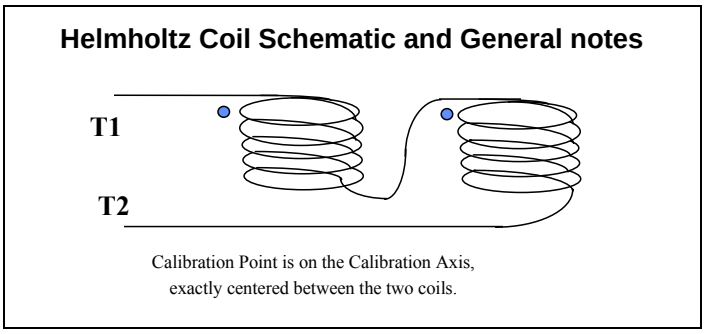

Figure D-13 - Helmholtz coil circuit

D.10 Probe, near-field, E-field

The probe and its associated cables shall not perturb the field by more than 1 dB from the measured quantity. Normally this requires probes of diameter less than 10 mm that are connected to the measurement instrumentation through high-resistance or non-conductive lines.

The probes shall be calibrated to a measurement uncertainty of no worse than ±2 dB. Probe calibration in accordance with IEEE Std 1309-2005 is discussed in Section C.3.

D.11 Probe, near-field, H-field

The probe and its associated cables shall not perturb the field by more than 1 dB from the measured quantity. Normally this requires probes of diameter less than 10 mm that are connected to the measurement instrumentation through high-resistance or non-conductive lines.

The probes shall be calibrated to a measurement uncertainty of no worse than ±2 dB. Probe calibration in accordance with IEEE Std 1309-2005 is discussed in Section C.3.

D.12 RF cables

Insertion Loss:	< 0.5 dB over 800 - 2500 MHz
VSWR:	< 1.5:1 over 800 - 2500 MHz (terminated with a 50 ohm load)

D.13 RF Communications test set

A Base Station Simulator or other means by which the WD may be configured in the required test conditions.

D.14 RF power amplifier

a) Frequency Range: 0.8 GHz to 3.0 GHz

b) Power Output Level and Gain: Capable of producing the required field strength within the test volume of the TEM Cell using the RF Signal Generator (described in D.15 below).

c) Linearity: Harmonics of the fundamental carrier frequency shall be at least 30 dB below carrier level (-30 dBc) at the maximum carrier power level used in the test set-up, With this carrier level, the AM distortion of the modulated envelope shall be less than 5% at an AM level of 80%.

Deleted: Near
Deleted: Field
Deleted: Field
Deleted: Near
Deleted: Field
Deleted: Field
Deleted: Cables
Deleted: Test
Deleted: Set
Deleted: Power
Deleted: Amplifier

DRAFT
Copyright © 2006 IEEE. All rights reserved.
This is an unapproved IEEE Standards Department Draft, subject to change.

Copyright The Institute of Electrical and Electronics Engineers, Inc.
Provided by IHS under license with IEEE
No reproduction or networking permitted without license from IHS
Not for Resale

D.15 RF Signal generator

Deleted: Generator

a) Frequency Range:	0.8 GHz to 3.0 GHz
b) Frequency Resolution:	100 Hz
c) Power Output Level:	greater or equal to +13 dBm (unmodulated carrier)
d) Modulation Capability:	0 to 99% AM at 1000 Hz at carrier outputs up to +7 dBm , both internal and external modulation capability
e) Linearity:	Harmonics of the fundamental carrier frequency shall be at least 40 dB below carrier level (-40 dBc) at the maximum carrier power level used in the test set-up, With this carrier level, the AM distortion of the modulated envelope shall be less than 5% at an AM level of 80%.
f) Non-Harmonic Spurious:	less than -40 dBc
g) Control Bus:	IEEE Std. 488

D.16 RF wattmeter

Deleted: Wattmeter

This is for measurement of the directional coupler output. Any RF voltmeter with an input impedance of 50 Ohms that can be calibrated in terms of rms Volts may be used as a substitute. Examples are spectrum analyzers, EMI receivers, and RF millivoltmeter instruments.

a) Frequency Range:	0.8 to 3.0 GHz
b) Impedance:	50 ohms
c) Amplitude Range of Input:	+20 to + 40 dBm (2.236 V rms to 22.36 V rms across 50 Ohms)

D.17 T-Coil integrator

Deleted: <#>Sine/Noise Generator¶
Equivalent to: B&K 2636¶

Formatted: Bullets and Numbering

Deleted: Integrator

For the measurement of ABM1, the intended WD audio frequency magnetic signal, the true magnetic field amplitude of the T-Coil signal is required. The reading must be compensated for the combined effect of the probe and the integrator. A full-band or half-band integrator may be used, so long as the proper compensation is applied to the resulting readings. Either integrator, full-band or half-band, may be used so long as the resulting reading is properly compensated to give the true magnetic field amplitude.

For a broadband measurement of the noise, ABM2, a half-band integration of the probe coil voltage is required.

Formatted: Bullets and Numbering

D.17.1 Full-band integration

For the measurement of audio frequency magnetic signal, a full-band integration of the probe coil voltage output, shown in Figure D-14, is specified, in order to enable measurement of the magnetic field magnitude vs. frequency. This integration, which consists of a downwards-sloping 6 dB/octave equalization, must be maintained accurately over at least the 300 Hz – 3 kHz frequency range of the frequency response masks of Section 7.3.2. This integration may be applied directly to the buffered probe coil signal, or mathematically in post-processing according to the inverse of the probe coil response defined in Figure C-4. The full-band integration frequency response is shown in Figure D-14, with the resultant integrated probe response to a constant field magnitude shown in Figure D-15. The resultant sensitivity shall not deviate from the uniform characteristic shown in Figure D-15 by more than 0.5 dB over the frequency range of 300 Hz to 3 kHz.

D.17.2 Half-band integration (T-Coil response)

Deleted: Response

Formatted: Bullets and Numbering

For the measurement of ABM2, the undesired WD audio frequency magnetic signal, a half-band integration of the probe coil voltage output, shown in Figure D-14, is specified, in order to simulate the magnetic frequency response of a typical hearing aid T-Coil. This integrates only the frequencies above 1 kHz, resulting in a first-order low-pass filter characteristic with a corner frequency of 1 kHz being applied to the probe coil output. This equalization should be maintained over at least a frequency range of 100 Hz –10 kHz, since the measured noise signal is not limited to the narrower ABM1 bandwidth. This filtering may be applied directly to the buffered probe coil signal, or mathematically in post-processing. The primary calibration of the half-band integrated probe coil response is at 1 kHz. The applied half-band integration frequency response is shown in Figure D-14, and the resultant modified

DRAFT
Copyright © 2006 IEEE. All rights reserved.
This is an unapproved IEEE Standards Department Draft, subject to change.

--`,,```,,,,````-`-`,,`,,`,`,,`---

Copyright The Institute of Electrical and Electronics Engineers, Inc.
Provided by IHS under license with IEEE
No reproduction or networking permitted without license from IHS
Not for Resale

probe response to a constant field magnitude shown in Figure D-15. The resultant sensitivity shall not deviate from the characteristic shown in Figure D-14 by more than 0.5 dB over the frequency range of 300 Hz to 3 kHz and 1 dB over the extended range of 100 Hz to 10 kHz.

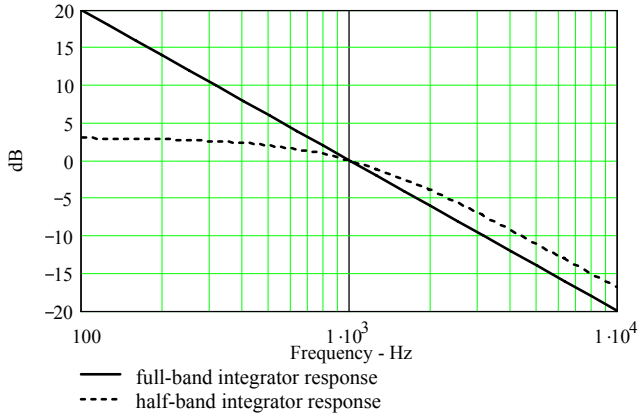

Figure D-14 – Full- and half-band integrator responses

Frequency (Hz)	315	400	500	630	800	1000	1250	1600	2000	2500	3150
Full-band	10.03	7.96	6.02	4.01	1.94	0	-1.94	-4.08	-6.02	-7.96	-9.97
Half-band	2.60	2.37	2.04	1.56	0.86	0	-1.08	-2.50	-3.98	-5.59	-7.37
Difference	7.43	5.59	3.98	2.46	1.08	0	-0.86	-1.58	-2.04	-2.37	-2.59

Table D-8 – Full- and half-band integrator responses at 1/3 octaves in dB re 1 kHz

DRAFT
Copyright © 2006 IEEE. All rights reserved.
This is an unapproved IEEE Standards Department Draft, subject to change.

Copyright The Institute of Electrical and Electronics Engineers, Inc.
Provided by IHS under license with IEEE
No reproduction or networking permitted without license from IHS
Not for Resale

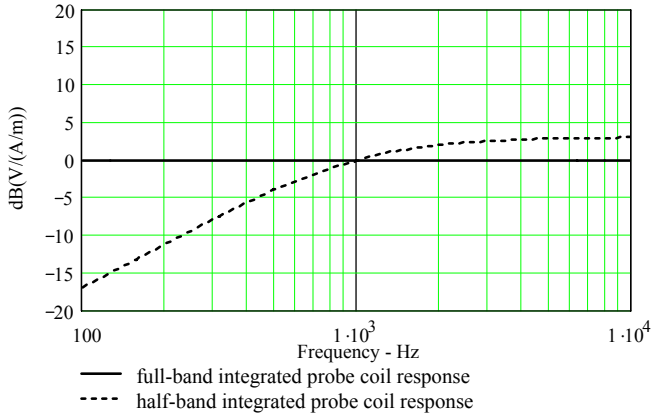

Figure D-15 – Resultant filtered probe coil responses

Frequency (Hz)	315	400	500	630	800	1000	1250	1600	2000	2500	3150
Full-band	0	0	0	0	0	0	0	0	0	0	0
Half-band	-7.43	-5.59	-3.98	-2.46	-1.08	0	0.86	1.58	2.04	2.37	2.59

Table D-9 – Resultant probe coil responses, dB (V/(A/m)) at 1/3 octaves in dB re 1 kHz

Frequency (Hz)	100	125	160	200	250	315	400	500	630	800	1000
Half-band integrator	2.97	2.94	2.90	2.84	2.75	2.60	2.37	2.04	1.56	0.86	0
Resultant response	-17.03	-15.12	-13.02	-11.14	-9.29	-7.43	-5.59	-3.98	-2.46	-1.08	0

Frequency (Hz)	1000	1250	1600	2000	2500	3150	4000	5000	6300	8000	10000
Half-band integrator	0	-1.08	-2.50	-3.98	-5.59	-7.37	-9.29	-11.14	-13.08	-15.12	-17.03

DRAFT
Copyright © 2006 IEEE. All rights reserved.
This is an unapproved IEEE Standards Department Draft, subject to change.

Copyright The Institute of Electrical and Electronics Engineers, Inc.
Provided by IHS under license with IEEE
No reproduction or networking permitted without license from IHS
Not for Resale

Resultant response	0	0.86	1.58	2.04	2.37	2.59	2.75	2.84	2.90	2.94	2.97

Table D-10 – Half-band integrator responses at 1/3 octave frequencies from 100 Hz to 10 kHz in dB re 1 kHz

Formatted: Bullets and Numbering

Deleted: Cell

D.18 TEM cell

a) Frequency range: 0.8 GHz to 3.0 GHz
b) VSWR over frequency range: < 1.50
c) Input impedance: 50 Ohms
d) Septum height in test region: 2X to 3X maximum dimension of hearing aid
e) Field uniformity in test region: 0 to 6 dB

Formatted: Bullets and Numbering

D.19 True RMS voltmeter

Input impedance: ≥100k ohm
Frequency range: 10 Hz to >10 kHz
Averaging Time: 0.1 sec and 3 seconds
Input Sensitivity: 0.7 mV or better
Accuracy: ± 3 %

DRAFT
Copyright © 2006 IEEE. All rights reserved.
This is an unapproved IEEE Standards Department Draft, subject to change.

Copyright The Institute of Electrical and Electronics Engineers, Inc.
Provided by IHS under license with IEEE
No reproduction or networking permitted without license from IHS
Not for Resale

Deleted: Measurement
Deleted: Uncertainty
Deleted: Estimates
Deleted: INFORMATIVE

Annex E. Sample measurement uncertainty estimates - (Informative)

Measurement uncertainty reflects the quality and accuracy of a measured result as compared to the true value. Such statements are generally required when stating results of measurements so that it is clear to the user of these measurement results that the results may differ when reproduced by different laboratories. Measurement results vary due to the measurement uncertainty of the instrumentation, and measurement technique, even when using this standard for test setups and compliance measurements.

Most uncertainties are calculated using the tolerances of the instrumentation used in the measurement, the measurement setup variability, and the technique used in performing the test. While not generally included, the variability of the equipment under test also figures into the overall measurement uncertainty.

Another component of the overall uncertainty is based on the variability of repeated measurements (so-called Type A uncertainty). This may mean that the Hearing Aid immunity tests may have to be repeated by taking down the test setup and resetting it up so that there is a statistically significant number of repeat measurements to identify this very important aspect of measurement uncertainty. By combining the repeat measurement results with that of the instrumentation chain using the technique contained in NIS 81 and NIS 3003,[9] the overall measurement uncertainty can be estimated.

This Annex contains sample calculations and typical values for the tests contained in this standard.

Deleted: Near
Deleted: Field
Deleted: Emissions
Deleted: Measurement
Deleted: Uncertainty
Deleted: Uncertainty
Deleted: Factors

E.1 WD near-field emissions measurement uncertainty

This section gives a sample uncertainty estimation for the WD Near-Field emission measurement.

E.1.1 Primary uncertainty factors

The following are judged to be the primary contributors affecting measurement uncertainty for this test:

Contributor	Influence quantity	Type	Source of information
RF reflections	±0.8 dB	Specification	Section 4.2.1 (Reflections < –20 dB)
Field probe conversion factor	±1.76 dB	Specification	C.3
Field probe anisotropy	±0.5 dB	Specification	Typical Probe Manufacturer Data
Positioning accuracy	±1.62 dB	Specification	E.2.3.1.3
Probe cable placement	±1 dB	Specification	D.10 & D.11
System repeatability	±2 dB	Specification	System repeatability is established by performing a series of measurements under equal conditions. For further guidance, consult United Kingdom Accreditation Service (UKAS) document M3003.
Repeatability of the WD	±0.5 dB	Std. Dev.	Estimate

[9] ANSI C63 current has a project underway that is preparing a document on measurement uncertainty. It is anticipated that when complete this document will have the most current and relevant guidance on determining measurement uncertainty for EMC measurements.

DRAFT
Copyright © 2006 IEEE. All rights reserved.
This is an unapproved IEEE Standards Department Draft, subject to change.

Copyright The Institute of Electrical and Electronics Engineers, Inc.
Provided by IHS under license with IEEE
No reproduction or networking permitted without license from IHS
Not for Resale

Deleted: Estimation

E.1.2 Sample estimation

WD near-field measurement uncertainty estimation						
Contribution	Data dB	Data type	Prob. dist.	Weight	Uncertainty dB	Notes/comments
RF reflections	0.8	Spec.	Rect.	$1/\sqrt{3}$	0.46	Reflections < –20 dB
Field probe conv. factor	1.76	Spec.	Rect.	$1/\sqrt{3}$	1.02	
Field probe anisotropy	0.5	Spec.	Rect.	$1/\sqrt{3}$	0.29	
Positioning accuracy	1.62	Accy.	Rect.	$1/\sqrt{3}$	0.94	
Probe cable placement	1.0	Spec.	Rect.	$1/\sqrt{3}$	0.58	
System repeatability	2.0	Spec.	Rect.	$1/\sqrt{3}$	1.15	
EUT repeatability	0.5	Std. Dev.	Norm.	1	0.5	
Combined standard uncertainty, $u_c(y)$			Norm.	1	2.03	
Expanded uncertainty, $U(y)$			Norm.	k = 2	4.06	

Table E-1 - Near-field measurement uncertainty

DRAFT
Copyright © 2006 IEEE. All rights reserved.
This is an unapproved IEEE Standards Department Draft, subject to change.

Copyright The Institute of Electrical and Electronics Engineers, Inc.
Provided by IHS under license with IEEE
No reproduction or networking permitted without license from IHS
Not for Resale

Deleted: Aid
Deleted: Near
Deleted: Field
Deleted: Immunity
Deleted: Measurement
Deleted: Uncertainty
Deleted: Uncertainty
Deleted: Contributors

E.2 Hearing aid near-field immunity measurement uncertainty

This section gives a sample uncertainty estimation for the hearing aid Near-Field immunity measurement.

E.2.1 Primary uncertainty contributors

The following are judged to be the primary contributors affecting measurement uncertainty for this test:

Contributor	Influence quantity	Type	Source of information
RF reflections	±0.8 dB	Specification	Section 4.2.1 (reflections < –20 dB)
Power meter (forward)	±0.06 dB	Specification	Typical power meter data
Power meter (reverse)	±0.06 dB	Specification	Typical power meter data
Directional coupler	±1.0 dB	Specification	Typical acccuracy dir. coup. data
Cable loss	±1.0 dB	Uncertainty	Calibration data
Hearing aid loading of antenna	TBD	Specification	D.5 Antenna VSWR ≤ 1.9
Mismatch - directional coupler to antenna	±0.19	Specification	Calculation for U-shaped distribution
Positioning variation	±1.62 dB	Specification	E.2.3.1.3
Acoustic transmission line loss	TBD		
Microphone	±1.0 dB	Specification	Calibration
2 cc coupler	TBD		
Pre-amplifier	±1.0 dB	Specification	Calibration
Frequency analyzer	±0.5 dB	Specification	Calibration
System repeatability	±0.5 dB	Std. dev.	System repeatability is established by performing a series of measurements under equal conditions. For further guidance, consult United Kingdom Accreditation Service (UKAS) document M3003.
Repeatability of the Hearing Aid	TBD		

The following factors are assumed to be negligible if the conditions listed are met:

Ambient Signals - Assumes an RF shielded environment.
Ambient Environment - Assumes temperature, humidity and other environmental parameters are within normal laboratory tolerances.

DRAFT
Copyright © 2006 IEEE. All rights reserved.
This is an unapproved IEEE Standards Department Draft, subject to change.

Copyright The Institute of Electrical and Electronics Engineers, Inc.
Provided by IHS under license with IEEE
No reproduction or networking permitted without license from IHS
Not for Resale

E.2.2 Sample estimation

Deleted: Estimation

Hearing aid near-field immunity measurement uncertainty estimation						
Contribution	Data dB	Data Type	Prob. dist.	Weight	Uncertainty dB	Notes/comments
RF reflections	±0.8	Spec.	Rect.	$1/\sqrt{3}$	±0.46	Reflections < –20 dB
Power meter (forward)	±0.06	Spec.	Rect.	$1/\sqrt{3}$	±0.034	VSWR ≤ 1.08, Γ ≤ 0.04
Power meter (reverse)	±0.06	Spec.	Rect.	$1/\sqrt{3}$	±0.034	" " " " " "
Directional coupler	±1.0	Spec.	Rect.	$1/\sqrt{3}$	±0.58	VSWR ≤ 1.15, Γ ≤ 0.07
Cable loss	±1.0	Uncert'y	Norm.	1/2	±0.5	
Hearing aid loading of ant.	-	-	-	-	-	VSWR ≤ 1.9, Γ ≤ 0.31
Mismatch	±0.19	Spec.	U-shaped	$1/\sqrt{2}$	±0.13	$20\text{Log}(1\pm\Gamma_1\Gamma_2)$
Positioning accuracy	±1.62	Spec.	Rect.	$1/\sqrt{3}$	±0.94	Section E.2.3.2
Acoustic transmission line	-	-	-	-	-	TBD
Microphone	±1.0	Spec.	Rect.	$1/\sqrt{3}$	±0.58	
2 cc coupler	-	-	-	-	-	TBD
Pre-amplifier	±1.0	Spec.	Rect.	$1/\sqrt{3}$	±0.58	
Frequency analyzer	±0.5	Spec.	Rect.	$1/\sqrt{3}$	±0.29	
System repeatability	±0.5	Std. Dev.	Norm.	1	±0.5	
EUT repeatability	-	Std. Dev.	Norm.	-	-	TBD
Combined standard uncertainty, $u_c(y)$			Norm.	1	1.65	
Expanded uncertainty, U			Norm.	2	3.29	

Table E-2 – Hearing aid immunity measurements

E.2.3 Positioning variability

Deleted: Variability

E.2.3.1 Resonant dipole field gradients

Deleted: Dipole
Deleted: Field
Deleted: Gradients

To measure the quantities reported in this section a resonant dipole was used having the following characteristics with a 1 mW net input power. The quantities given are scaleable to adjust for the actual power used in an immunity test.

E.2.3.1.1 At 1900 MHz and 10 mm separation distance

Deleted: Separation
Deleted: Distance

The maximum E-Field is 33.3 V/m, which is located 3.3 cm from the center of the dipole. The H-Field at this point is 878 μA/m. So the field impedance is 37.93 kΩ. The field varies by 10% 1 mm from center in the tangential direction and by 20% 2 mm from center.

The maximum H-Field is 93.7 mA/m, which is located at the center of the dipole. The E-Field at this location is 4.19 V/m. The field impedance is 44.74 Ω at this location. The field variation is the same as that given for the E-Field.

E.2.3.1.2 At 1900 MHz and 20 mm separation distance

Deleted: Separation
Deleted: Distance

DRAFT
Copyright © 2006 IEEE. All rights reserved.
This is an unapproved IEEE Standards Department Draft, subject to change.

Copyright The Institute of Electrical and Electronics Engineers, Inc.
Provided by IHS under license with IEEE
No reproduction or networking permitted without license from IHS
Not for Resale

The maximum E-Field is 13.9 V/m, which is located 30 mm from the center of the dipole. The H-Field at this point is 17 mA/m. The field impedance is 817.65 Ω at this point. The field varies by 10% 3 mm from center in the tangential direction and by 20% 6 mm from center.

The maximum H-Field is 34 mA/m, which is located at the center of the dipole. The E-Field at this location is 7.0 V/m. The field impedance is 205.88 Ω at this location. The field variation is the same as that given for the E-Field.

E.2.3.1.3 Uncertainty due to positioning variability

Deleted: Due
Deleted: Positioning
Deleted: Variability

If the immunity test is performed at 10 mm from the dipole and the positioning system has a tolerance of ±2 mm a variation of ±17% can be expected. Converting ±17% to dB yields a ±1.62 dB uncertainty due to positioning accuracy. For an uncertainty of ±2.0 dB, a variation of ±21% is required. This equates to a distance between readings of less than 2.5 mm.

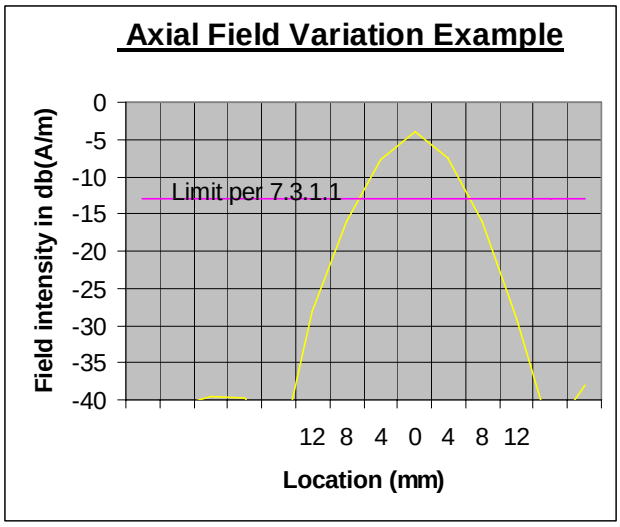

Figure E-1 – Example of axial field variation

DRAFT
Copyright © 2006 IEEE. All rights reserved.
This is an unapproved IEEE Standards Department Draft, subject to change.

Copyright The Institute of Electrical and Electronics Engineers, Inc.
Provided by IHS under license with IEEE
No reproduction or networking permitted without license from IHS
Not for Resale

E.3 WD audio band measurement uncertainty

Deleted: Audio
Deleted: Band
Deleted: Measurement
Deleted: Uncertainty

This section gives sample uncertainty estimation for the WD Audio Band Magnetic Signal measurement.

E.3.1 Primary uncertainty factors

Deleted: Uncertainty
Deleted: Factors

Contributor	Influence quantity	Type	Source of information
RF reflections	±0.8 dB	Specification	Section 6.2.1
Acoustic noise	±0.8 dB	Specification	Section 6.2.1
Probe coil sensitivity	±0.5 dB	Specification	Section D.8
Reference signal level	±0.5 dB	Specification	Calibration
Positioning accuracy	±1.62 dB	Specification	Section E.2.3.1.3
Cable loss	±1 dB	Uncertainty	Calibration
Frequency analyzer	±0.5 dB	Specification	Calibration
System repeatability	±0.5 dB	Specification	Estimate
Repeatability of the WD	±0.5 dB	Std. dev.	Estimate

E.4 Sample estimation

Deleted: Estimation

Contribution	Data (dB)	Data (%)	Data type	Probability distribution	Divisor	Std. uncertainty (%)	Std. uncertainty (dB)
RF reflections	0.80	20.2	Specification	rectangular	√3	11.7	
Acoustic noise	0.80	20.2	Specification	rectangular	√3	11.7	
Probe coil sensitivity	0.50	12.2	Specification	rectangular	√3	7.0	
Reference signal level	0.50	12.2	Specification	rectangular	√3	7.0	
Positioning accuracy	1.62	45.2	Specification	rectangular	√3	26.1	
Cable loss	1.00	25.9	Uncertainty	Normal	2	12.9	
Frequency analyzer	0.50	12.2	Specification	rectangular	√3	7.0	
System repeatability	0.50	12.2	Standard deviation	normal	1	12.2	
Repeatability of the WD	0.50	12.2	Standard deviation	normal	1	12.2	
Combined standard uncertainty u_c				normal		39.6%	1.45 dB
Expanded uncertainty (coverage factor = 2) U				Normal (K=2)		79.2%	2.53 dB

Table E-3 – Sample WD uncertainty estimate

DRAFT
Copyright © 2006 IEEE. All rights reserved.
This is an unapproved IEEE Standards Department Draft, subject to change.

Copyright The Institute of Electrical and Electronics Engineers, Inc.
Provided by IHS under license with IEEE
No reproduction or networking permitted without license from IHS
Not for Resale

Deleted: Coils
Deleted: Calibration
Deleted: INFORMATIVE

Annex F. Use of Helmholtz coils for calibration - (Informative)

This paper was presented at the 1995 IEEE Symposium on EMC in Atlanta, Ga. Some typographical errors were discovered in the equations in the original published copy. It is therefore reproduced here, with typographical corrections, for the convenience of the reader.

Helmholtz Coils for Calibration of Probes and Sensors: Limits of Magnetic Field Accuracy and Uniformity

Edwin L. Bronaugh, NCE
EdB™ EMC Consultants
10210 Prism Drive
Austin, TX 78726-1364

Abstract — Helmholtz coils have been around us for years, but few people now seem to understand their capabilities. The paper explains the accuracy and field uniformity limits of helmholtz coils for use as a calibration standard for magnetic field probes and sensors. The magnetic field generation accuracy depends on the accuracy with which helmholtz coils are constructed and the accuracy with which the current through them is maintained. The user is shown how to determine the accuracy of the generated magnetic field based on physical measurements of distance or spacing between the coils, their radii, the thicknesses of the windings on each coil and number of turns. Ways to estimate the maximum usable frequency and minimum space needed around them are given. Procedures are given so that the user may determine the field uniformity versus volume around the center point of the set of coils, and thus determine the coil characteristics needed to calibrate a particular probe or sensor. Or, if a given helmholtz coil set can be used for calibration of a given sensor.

F.1 Introduction

Helmholtz coils have been in use for several lifetimes for calibrating magnetic field sensors or probes. More recently, they have been put to work doing low-frequency magnetic field immunity tests. A few years ago, the author presented a paper in England [1] on the use of helmholtz coils for immunity testing. The need for that paper became apparent when listening to discussions of helmholtz coils in test seminars and standards committees. No one seemed to understand the accuracy with which helmholtz coils could produce magnetic fields and the trade-offs between the field uniformity and the size of the device under test (DUT). Guesses were made as to how large a device could be tested in a pair of helmholtz coils, and a cubic volume having dimensions of one-third of the coil radius was often suggested, but wholly incorrect, since this dimension came from TEM (Crawford) cell use.

Now helmholtz coils are again being considered as one of several methods for calibrating low frequency magnetic field probes and sensors in IEEE standards project P1309. It appears that a clear and easy method is needed for a user to assess the expected calibration accuracy of a set of helmholtz coils and the field uniformity versus size of the DUT, which leads to the size of the helmholtz coils needed. The size of the coils and field strength required also impact the maximum frequency of calibration and the size of obstruction-free laboratory space needed to assure minimal environmental interaction.

In sensor and magnetometer calibration it is important to obtain the utmost in field uniformity. To make best use of helmholtz coils for calibration of sensors, the metrologist needs to know the size and shape of the uniform field region of given precision within a set of helmholtz coils. In this paper, equations are developed for use in determining the size and shape of regions of specified field uniformity in standard helmholtz coil sets defined below. Regions of commonly used values of uniformity are tabulated, and graphical data and formulas are given that allow the arbitrary selection of uniformity, within reason, and produce dimensions of the uniform region.

DRAFT
Copyright © 2006 IEEE. All rights reserved.
This is an unapproved IEEE Standards Department Draft, subject to change.

Copyright The Institute of Electrical and Electronics Engineers, Inc.
Provided by IHS under license with IEEE
No reproduction or networking permitted without license from IHS
Not for Resale

The work reported in this paper is part of a larger project to fully understand and characterize the sources of error in magnetic fields generated by helmholtz coils. There are other structures for producing very uniform magnetic fields, e.g., the "Rubens' Coil" [2], but the helmholtz coils are the simplest to manufacture and characterize.

In a pair of helmholtz coils, the accuracy of the magnetic fields produced within them is primarily affected by the accuracy with which they are constructed and the accuracy with which the current driving them is known. Secondarily, the accuracy is also affected by the equality and uniformity of the driving currents in the two coils. These secondary effects usually arise because of the frequency of operation and the nearness of large metallic (magnetic) surfaces.

Definition. A set of helmholtz coils consists of two circular coils of equal diameter and equal number of turns parallel to each other along an axis through the center of the coils, separated by a distance equal to the common radius of the coils. For multiple turn coils, the diameter of the winding on each coil is much much smaller than the diameter of the coil. The two coils are connected in series aiding in order to produce a nearly uniform magnetic field in a region surrounding the center point of the axis between to two coils. (The coils can be connected in parallel aiding, but the current in the coils shall be kept equal!) This arrangement is shown in Figure 1.

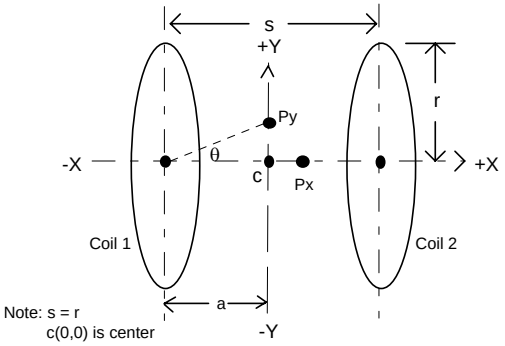

Figure F-1 - Helmholtz coil arrangement

F.2 Axial field-strength accuracy

Deleted: Field
Deleted: Strength
Deleted: Accuracy

Constructional features such as the radii of the coils and their spacing have a direct effect as can be seen from equation (1) [3] of the axial magnetic field strength, H_x in A/m, vs. coil size, spacing, number of turns, and current. This equation gives the field strength at a point on the common axis of the two coils, P_x on the X-axis in Figure 1.

$$H_x = H_1 + H_2 = \frac{N_1 I r_1^2}{2\left(r_1^2 + a_1^2\right)^{3/2}} + \frac{N_2 I r_2^2}{2\left(r_2^2 + a_2^2\right)^{3/2}} \qquad (1)$$

According to the definition of helmholtz coils, $r_1 = r_2 = r$, $N_1 = N_2 = N$ and $2a_1 = 2a_2 = s = r$, so that after some manipulation, equation (1) becomes:

DRAFT
Copyright © 2006 IEEE. All rights reserved.
This is an unapproved IEEE Standards Department Draft, subject to change.

Copyright The Institute of Electrical and Electronics Engineers, Inc.
Provided by IHS under license with IEEE
No reproduction or networking permitted without license from IHS
Not for Resale

$$H_x = \frac{NI}{2r}\left\{\left[1+\left(\frac{1}{2}-\frac{x}{r}\right)^2\right]^{-\frac{3}{2}} + \left[1+\left(\frac{1}{2}+\frac{x}{r}\right)^2\right]^{-\frac{3}{2}}\right\} \quad (2)$$

Where: N is the number of turns on each coil;
r is the radius of each coil, in meters;
x is the axial position of the magnetic field, in meters from the center of the coil set; and
I is the current in the coils, in amperes.

For the special position at the center of the coil set where x = 0, the magnetic field is given by equation (3).

$$H_C = \frac{NI}{r(1.25)^{3/2}} \approx \frac{0.7155NI}{r} \quad (3)$$

The approximation using the four-digit constant (0.7155) is less than 0.006 % low, i.e., the error is less than 60 parts per million. Neglecting this small error, the error in H_c caused by dimensional, constructional, and current variability errors may be found from equation (4), which is also found in [5].

$$\varepsilon = \frac{\Delta H_C}{H_C} = -0.2\left(\frac{\Delta r_1}{r}+\frac{\Delta r_2}{r}\right) - 0.6\frac{\Delta s}{s} + \frac{\Delta I}{I} + \frac{\Delta N}{N} \quad (4)$$

From this relationship, you can see that errors in the coil current and the number of turns are most serious, an error in the coil spacing is less serious, and an error in the coil radius is least serious.

F.2.1 Coil radius and spacing error effects

Deleted: Radius
Deleted: Spacing
Deleted: Error
Deleted: Effects

Table F-1 shows some errors in dimensions that cause errors of 1 %, 2 %, and 5 % in Hc. It is apparent in equation (4) that equal and opposite errors in the radius of the coils offset each other and not affect the magnetic field. This is correct for points on the center line of the coils; but for fields radially off of the center line, the field uniformity is no longer symmetrical either side of the center of the coil set (discussed later in the paper). The important issue is that the coils can be measured with a "ruler" and an error as large as 2 % in coil radius or 1.6 % in coil spacing are very obvious for coils of practical dimensions. This is one of the reasons that helmholtz coils have for years had almost the status of primary standards. When measuring the radius of the coils, measure the diameter from the center of the winding through the center of the coil to the center of the winding at the other end of the diameter and divide by two.

Dimension	ε = 1 %	ε = 2 %	ε = 5 %
r_1	5 %	10 %	25 %
r_2	5 %	10 %	25 %
$r_1 + r_2$	2.5 %	5 %	12.5 %
s	1.66 %	3.33 %	8.33 %

Table F-1 - Errors in H_c versus errors in r_1, r_2 and s.

DRAFT
Copyright © 2006 IEEE. All rights reserved.
This is an unapproved IEEE Standards Department Draft, subject to change.

Copyright The Institute of Electrical and Electronics Engineers, Inc.
Provided by IHS under license with IEEE
No reproduction or networking permitted without license from IHS
Not for Resale

F.2.2 Coil current and turns errors

Deleted: Current
Deleted: Turns
Deleted: Errors

Errors in coil turns and coil current are more serious, not only because they directly affect the magnetic field on a one-to-one basis, but because they are harder to measure accurately. There can also be errors brought about by unequal coil currents and an unequal number of coil turns, which require special methods to avoid.

Coil Current Errors are dependent on the accuracy and resolution (precision) of the current measuring device or current meter. Now-a-days AC and DC current meters can be much more accurate than they once were. There are current meters available that have accuracies better than 0.4 % and resolutions better than 0.00005 %, but there are also many available that are much worse. Do not "cut corners" when acquiring the current meter.

Coil Turns Errors may be determined directly or indirectly. If there are more than two or three turns on each coil, it is difficult to count them and indirect measurements may have be made to determine how much wire is on the coil. The measurement errors can add up to large amounts in these indirect measurements. It is therefore best to assure that the coil manufacturer has counted the turns correctly during construction of the coils. Short of that, it is important to know that there are an integral number of turns on each coil.

An integral number of turns allows a choice of two methods to determine the number of turns. One, a coil resistance measurement easily determines how many coil turns there are since the coil resistance is proportional to the number of turns. While a resistance measurement might not be sufficiently accurate to determine if there are a certain number of whole turns on the coil, such a measurement tells how many turns are there if one has a priori knowledge that there are an integral or whole number of turns on the coil; i.e., the leads come out of the coil at the same point on the circumference. Two, a current probe measurement of the product *NI* easily gives the number of turns by comparison with the input current to the coil, if it is known that there are an integral number of turns on the coil.

The last term in equation (4), the turns error, may be modified to account for errors in the number of turns on each of the individual coils. Replace $\Delta N/N$ with $0.5(\Delta N_1/N + \Delta N_2/N)$, where N is the design number of turns. This shows that the error in the axial magnetic field is half that of the turns error in each of the coils. Again, if one coil is too small and the other too large by the same error, the center point magnetic field is not affected, but the symmetry of the uniform field volume is distorted.

Current and Turns Errors in Parallel-Fed Coils. There are situations in which it is necessary to feed the coils in parallel. This occurs at higher frequencies where the impedance of the coil is large enough to make it difficult to drive the necessary current through the coils when they are connected in series aiding. Use this parallel-aiding connection only when absolutely necessary.

When the coils are connected in parallel-aiding, the two coil currents shall be kept equal and in phase. To do this, they shall come from the same generator through phase-matched paths and be independently adjustable. To evaluate the errors caused by this connection, replace the last two terms in equation (4) with a new last term, as shown in equation (5), in which N is the design value and I is the intended current.

$$\varepsilon = -0.2\left(\frac{\Delta r_1}{r} + \frac{\Delta r_2}{r}\right) - 0.6\frac{\Delta s}{s} + 0.5\left(\frac{\Delta N_1 I_1}{NI} + \frac{\Delta N_2 I_2}{NI}\right) \qquad (5)$$

This shows that the products *NI* are what shall be controlled and kept as accurate and as equal as possible. If a current probe is connected around each coil, the value of *NI* in both coils can be set equally and accurately within the resolution and accuracy of the current probe and voltmeter combination used. The last term of equation (5) now becomes $(\Delta I_{cpa}/I + \Delta I_{cpr}/I)$, where $\Delta I_{cpa}/I$ is the accuracy of the probe and voltmeter, $\Delta I_{cpr}/I$ is their resolution, and the coefficient 0.5 becomes unity. If a precision current meter is used to set the current in one coil and the current probe-voltmeter technique is used to bring *NI* to equality in both coils, the last term of equation (5) becomes $(\Delta I/I + 0.5\Delta I_{cpr}/I)$, where $\Delta I/I$ is the error in the current meter. For example, if the current accuracy is 0.4 % and the resolution of the current probe-voltmeter is 0.01 %, then the total error in H_x is 0.405 %. The inequality of *NI* in both coils is the resolution of the current probe-voltmeter. This technique can produce a more symmetrical uniform field volume than individually adjusting the coil currents when the coils shall be fed in parallel, and is my recommended approach.

DRAFT
Copyright © 2006 IEEE. All rights reserved.
This is an unapproved IEEE Standards Department Draft, subject to change.

Copyright The Institute of Electrical and Electronics Engineers, Inc.
Provided by IHS under license with IEEE
No reproduction or networking permitted without license from IHS
Not for Resale

F.3 Radial field-strength

Deleted: Field
Deleted: Strength
Deleted: Radial
Deleted: Field
Deleted: Strength

F.3.1 Calculating radial field strength

Equation (6) gives the radial magnetic field strength, H_ρ, at a point off of the coil-axis, e.g., P_y in Figure 1. When *y/r* is zero, this equation gives results identical to equation (2), and when *x/r* is also zero, it gives results identical to equation (3). This equation may be used to compute the magnetic field strength anywhere in the space between the coils and its results are plotted in Figure 2. Figure 2 is a normalized plot of field strength relative to center, $\Delta H/H_c$, versus the axial distance from center, *x/r*, for several values of radial distance from center, *y/r*.

$$H_\rho = H_{\rho 1} + H_{\rho 2} \tag{6}$$

$H_{\rho 1}$ is the field contribution from coil 1 and $H_{\rho 2}$ is the field contribution from coil 2.

$$H_{\rho 1} = \frac{NI}{2\pi r}\frac{1}{\sqrt{(1+y/r)^2 + K_1^2}}\left[f_1(\theta) + g_1(\theta)\frac{1-(y/r)^2-(x/r+1/2)^2}{(1-y/r)^2 + K_1^2}\right] \tag{6a}$$

$$H_{\rho 2} = \frac{NI}{2\pi r}\frac{1}{\sqrt{(1+y/r)^2 + K_2^2}}\left[f_2(\theta) + g_2(\theta)\frac{1-(y/r)^2-(x/r-1/2)^2}{(1-y/r)^2 + K_2^2}\right] \tag{6b}$$

where: $$f_C(\theta) = \int_0^{\pi/2} \frac{d\theta}{\sqrt{1-\rho_C^2 \sin^2\theta}} \tag{7}$$

$$g_C(\theta) = \int_0^{\pi/2} \sqrt{1-\rho_C^2 \sin^2\theta}\; d\theta \tag{8}$$

$$\rho_C = \sqrt{\frac{4(y/r)}{(1+y/r)^2 + K_C^2}} \tag{9}$$

The subscript c is 1 for coil #1 and 2 for coil #2

$$K_1 = (x/r + 1/2) \tag{10a}$$

$$K_2 = (1/2 - x/r) \tag{10b}$$

DRAFT
Copyright © 2006 IEEE. All rights reserved.
This is an unapproved IEEE Standards Department Draft, subject to change.

Copyright The Institute of Electrical and Electronics Engineers, Inc.
Provided by IHS under license with IEEE
No reproduction or networking permitted without license from IHS
Not for Resale

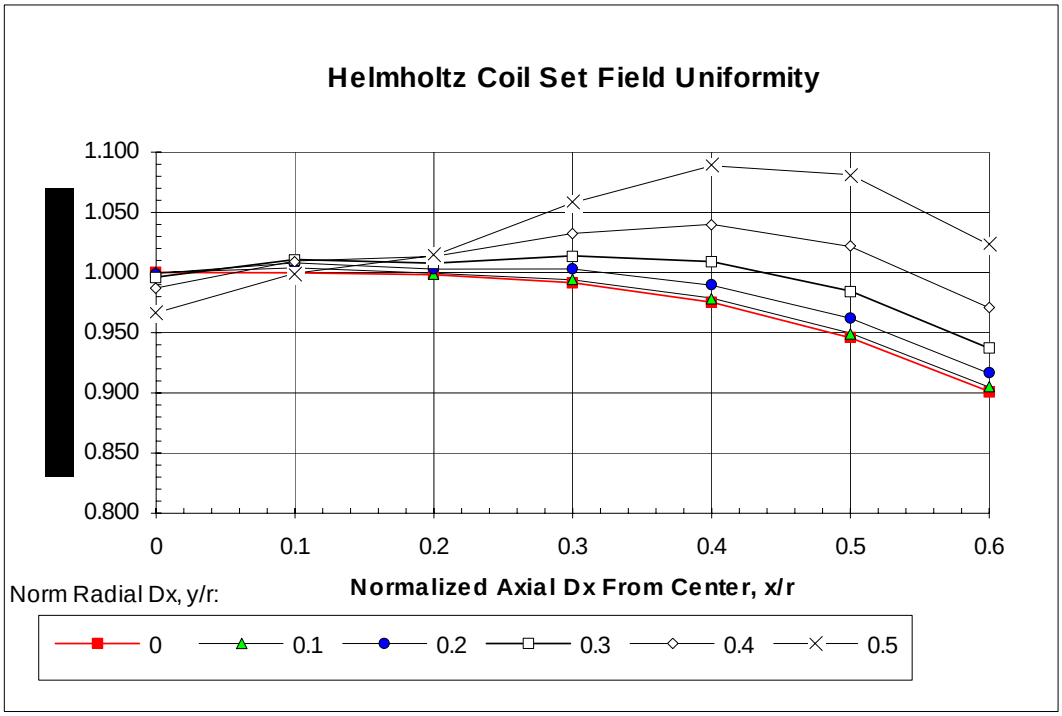

Figure F-2 - Normalized magnetic field strength computed from equation (6).

F.3.2 Determining coil size

Deleted: Coil

Deleted: Size

Table F-2 shows the normalized x and y values for field uniformity of 1 %, 2 %, 5 % and 10 %.

Unif.	1 %	2 %	5 %	10 %
±x/r	0.3	0.4	0.5	0.6
±y/r	0.3	0.4	0.4	0.5

Table F-2 - **Normalized radii for several values of field uniformity ($\Delta H/H_c$)**

From Table F-2 one can determine the size of coils needed for a particular maximum field-strength uncertainty based on the size of the DUT. Each volume is ellipsoidal or cylindrical, approximately, centered on the center point of the helmholtz coil set, and *x/r* and *y/r* are the normalized radii of the ellipsoid. These radii represent half of the maximum dimensions of the DUT relative to the radius of the coils. To find the radii of helmholtz coils needed for a DUT of a given size, divide the dimensions of the DUT by twice the values in Table F-2. For example, if a magnetic field probe is made up of three orthogonal loops each 20 cm in diameter, and it is desired to keep each loop in the 1 % uncertainty or field uniformity volume, the minimum radius of the Helmholtz coils shall be $r = 20/(2\times0.3) = 33.33$ cm. The diameter of both coils should be 0.67 m or greater.

DRAFT
Copyright © 2006 IEEE. All rights reserved.
This is an unapproved IEEE Standards Department Draft, subject to change.

Copyright The Institute of Electrical and Electronics Engineers, Inc.
Provided by IHS under license with IEEE
No reproduction or networking permitted without license from IHS
Not for Resale

F.3.3 Maximum frequency of operation

Deleted: Frequency
Deleted: Operation

To assure that the magnetic fields within the helmholtz coil set remain as uniform as possible, the upper frequency of use should be limited such that the current around the circumference of both coils stays constant, and the electric and magnetic fields induced by the intended alternating magnetic field are small enough to be neglected [5]. A further limit is that the frequency of operation should be well below the self-resonance frequency of the coils. A practical limiting frequency is the frequency at which the impedance of the coils is so high that they are difficult to drive. This last limit is the lowest in frequency and is the one that usually prevails. The hierarchy of these limits are shown in Table F-3 and discussed below.

1	Length of wire in coils	Highest frequency
2	Secondary field effects	Lower than 1
3	Self resonance	Lower than 2
4	Fall-off of drive current	Lowest frequency

Table F-3 – Upper frequency limit

The frequency at which the currents around the circumference of the coils stays constant is the highest of the possible limiting frequencies. At this frequency the length of the wire in each of the coils is no longer than 0.15 λ or 0.10 λ. Since it is the highest of the limiting frequencies, it is of little practical importance.

From Maxwell's equations, we know that an alternating magnetic field generates an alternating electric field, which in turn, generates another alternating magnetic field, etc. Thus when an AC magnetic field is intentionally created by a pair of helmholtz coils, it generates a series of electric and magnetic fields in the same test volume where the uniform magnetic fields are desired. Also, since the helmholtz coils do not usually have an electric shield, they directly generate an electric field that also generates a secondary magnetic field, etc. The magnitude of these effects increases with increasing frequency. The frequency at which these effects cannot be neglected is lower than the highest limiting frequency discussed above, but much higher than the self-resonance frequency of the coils [5].

The self-resonance frequency of the coils is given by the familiar equation $f_0 = 1/(2\pi\sqrt{LC})$. The inductance L of the coils is easily calculated, but C is the stray capacitance of the coils and is not easily calculated. It could be modeled by the Method of Moments. This frequency is much lower than the other two limiting frequencies, and it is a limit primarily because the coils are extremely difficult to drive at this frequency since it is a parallel resonance.

A practical maximum frequency is reached before the coils begin to approach resonance. About two orders of magnitude below the self-resonance frequency of the coils is the frequency where for a given generator power, the drive current begins to fall off. The impedance (mostly reactance) of the coils increases with increasing frequency so that more and more generator power is required to maintain the nominal magnetic field. The frequency at which the generator power shall be doubled (3 dB) to maintain the desired coil current is often referred to as the bandwidth or corner frequency of the helmholtz coil set. It is probably reasonable to set the practical upper frequency no higher than the frequency where the generator power would have to be 10 times its level at low frequencies. The term *generator* used here includes any power amplifier needed to produce the required coil current, so that a factor of 10 increase in generator power may be too extravagant, i.e., the cost of the higher-powered amplifier may be prohibitive. The effect is given in equation (11).

$$f_U = \frac{\left(R_g + R_c\right)}{2\pi L_T}\sqrt{\left(\frac{P_U}{P_O}\right) - 1}\ \text{, Hz} \qquad (11)$$

$$L_T = 2N^2 r\left\{\alpha + \mu\left[ln\left(8r/b\right) - 2\right]\right\}\text{, H (Series-connected)} \qquad (12)$$

Where: α is the mutual inductance factor, 0.494×10^{-6} for helmholt coils [5];
b is the effective radius of the coil winding, m (see Figure 3);
R_g is the generator source impedance, Ω;
R_c is the total resistance of both coils, Ω;
and,
P_u/P_o is the ratio of the generator power at the upper frequency to the generator power at low

DRAFT
Copyright © 2006 IEEE. All rights reserved.
This is an unapproved IEEE Standards Department Draft, subject to change.

--`,,```,,,,````-`-`,,`,,`,`,,`---

Copyright The Institute of Electrical and Electronics Engineers, Inc.
Provided by IHS under license with IEEE
No reproduction or networking permitted without license from IHS Not for Resale

frequencies.

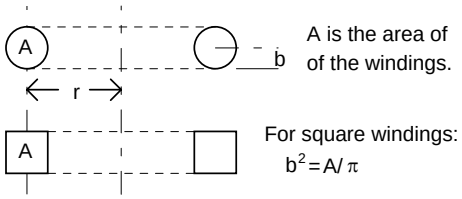

Figure F-3 - Alternative coil winding configurations.

Deleted: Loading

F.3.4 Effect of loading

A large DUT made of magnetic material may load the coils and concentrate the fields in its vicinity. If inserting the DUT into the test space within the helmholtz coil set causes the coil current to change by more than a few per cent, it should be suspected that the field is distorted and may not be accurate even after returning the coil current to the correct value. The coil current should always be set with the system empty and then reset to the original value after the DUT is inserted. If field distortion is suspected, a larger set of helmholtz coils should be used.

Using the helmholtz coil set inside of a shielded enclosure that is too small affects the accuracy of the fields. If a shielded enclosure is used, its smallest dimension shall be more than 6.7 *r* to prevent loading of the system and distortion of the fields. This dimension may also be used to determine how far away from the helmholtz coils large metallic objects should be.

F.4 Summary

The use of helmholtz coils for probe or sensor calibration is summarized as follows:

1. Helmholtz coils may be used to volumes with dimensions of *0.6 r* for highly accurate probe or sensor calibration;
2. Helmholtz coils should be used in the series-aiding connection, but may be used in the parallel-aiding connection if necessary–with extra current controls and precautions;
3. Balance the products *NI* in the two coils for maximum accuracy; and,
4. Consider helmholtz coils a primary standard: they can be calibrated by ruler.

F.5 References

[1] E. L. Bronaugh, "Helmholtz Coils for EMI Immunity Testing: Stretching the Uniform Field Area," *Electromagnetic Compatibility*, 7th Int'l. Conf. on EMC, Pub. No. 326, Institution of Electrical Engineers, York, UK, 1990, pp 169-172.

[2] S. M. Rubens, "Cube-Surface Coil for Producing a Uniform Magnetic Field," *Review of Scientific Instruments,* Vol. 16, No. 9, September 1954, pp 243-245.

[3] L. B. Loeb, *Fundamentals of Electricity & Magnetism,* 3rd Ed., Dover Publications, Inc., NY, 1961, pp 56-62.

[4] Van Bladel, *Electromagnetic Fields,* McGraw-Hill, Inc., NY, 1964, pp 155-156.

[5] L. M. Millanta, et. al., "Helmholtz Coils: Static and Frequency-Dependent Performance Limitations."

DRAFT

Copyright © 2006 IEEE. All rights reserved.

This is an unapproved IEEE Standards Department Draft, subject to change.

Copyright The Institute of Electrical and Electronics Engineers, Inc.
Provided by IHS under license with IEEE
No reproduction or networking permitted without license from IHS

Not for Resale

Annex G. RF envelope comparison for US WD systems - (Informative)

Deleted: E
Deleted: Comparison
Deleted: Systems
Deleted: INFORMATIVE
Deleted: Comparison of the RF Envelope of US Cellular Systems¶ ¶

G.1 Introduction

The purpose of this annex is to outline the similarities and differences between the current cellular systems being used in the US. The discussion is tailored towards the information that is pertinent to the issue of hearing aid compatibility, when addressing the issue of interference to hearing aids from digital cellular phones. There is one major analog and several digital cellular systems on the air currently in the US. They are AMPS (IS-91A), NADC (IS-136), PCS1900 (JTC007), *i*DEN and CDMA (IS-95). The following discussion will review each of these systems, highlighting their operation as it relates to the time domain transmitter signatures. Table G-1 shows a summary of the relevant parameters of each of these systems.

	IS-91A	IS-136		JTC007	IS-95	
Characteristic	Analog	800 MHz TDMA (NADC)	800 MHz GSM	1900 MHz PCS	800 MHz CDMA	iDEN™
Transmit Frequency (MHz)	824-849	824-849	890-915	1850-1990	824-849	806-821 896-901
Peak Transmitter Power (mw)	600	600	2000	1000	250	600
Lowest Transmitter Power (mw)	7	0.4	20	20	<0.001	0.3
Average Transmitter Power (mw)	600	200	235	118	varies	100 (1:6 duty cycle) 200 (2:6 duty cycle)
Pulse Repitition (pulses/sec.)	N/A	50	217	217	varies	11 (1:6 duty cycle) 22 (2:6 duty cycle)
Pulse Width (ms.)	N/A	6.7	0.6	0.6	varies	15
Time between pulses (ms.)	N/A	13.4	4	4	varies	75 (1:6 duty cycle) 30 (2:6 duty cycle)
Modulation in pulse	FM	pi/4 QPSK (1)	GMSK (2)	GMSK (2)	OQPSK (3)	QUAD 16-QAM
Power control	Base Station only	Base Station only	Base Station only	Base Station only	Base and Mobile	Mobile
Notes:						
1) pi/4 QPSK modulation has 8 modulation phase states, which travel in an irregular path between states, resulting in a small amount						
of AM content.						
2) GMSK modulatin has 4 modulation phase states which travel in a circular path between states, resulting in no AM content.						
3) OQPSK modulation has 4 modulation phase states which travel in an irregular path between states thus resulting in a large AM content.						

Table G-1 - Relevant parameters for time domain transmitter signatures

G.2 AMPS

The Advanced Mobile Phone system that is used in the US is classified as an analog system because the transmitter is on for the full duration of the phone call and the transmitter is Frequency Modulated using an analog representation of the voice signal. Although the base station has control over the subscriber unit's transmitter power, the power level can change only every few seconds. The transmitter is turned off for approximately 75ms during a "handoff" from one channel to another, i.e. when switching from a signaling channel to a voice channel, or from one voice channel to another.

G.3 NADC

The North American Digital Cellular system is a Time Division Multiple Access (TDMA) system in that each user has one of three time slots to transmit in. There are 3 time slots allocated for each channel. The frame repetition rate

DRAFT
Copyright © 2006 IEEE. All rights reserved.
This is an unapproved IEEE Standards Department Draft, subject to change.

--`,,```,,,,````-`-`,,`,,`,`,,`---

Copyright The Institute of Electrical and Electronics Engineers, Inc.
Provided by IHS under license with IEEE
No reproduction or networking permitted without license from IHS
Not for Resale

is 50 Hz, thus making any given subscriber unit transmit 50 pulses every second, each pulse being 6.7 ms. long. The modulation during the pulse is 1/4 Quadrature Phase Shift Keying (QPSK). This means that the modulation is essentially phase modulation, but as the modulation phase state moves from one state to another, it does change in amplitude. This results in some amount of AM present on the PM signal in the pulse. Thus one needs to talk about peak power in the pulse and separately average power in the pulse, as well as overall average power. The ramp up and ramp down times of the transmitter are fairly rapidly, thus the average power is very close to 1/3 rd of the peak power. The transmitter power is controlled by the base station, and can change only every several pulses in 4dB steps.

Measuring overall average transmitter power is difficult with many power meters because their sampling time is not correlated to the pulse rate, and they may sample a slightly different number of "on" pulses during successive measurements. The best meters to use are the older bolometer type analog meters, which will perform a long time average, or diode detector type meters that can discern between on and off time of the pulse.

G.4 GSM and PCS

The European 900 MHz GSM system is essentially identical to the US 1900 MHz PCS system. The major differences are the frequencies of operation, and that the PCS system has a transmitter power of 1.0 W in the burst vs. 2.0 W for GSM. The PCS system is a Time Division Multiple Access (TDMA) system in that each user has one of eight time slots to transmit in. There are eight time slots allocated for each channel. The repetition rate is 217 Hz, thus making any given subscriber unit transmit 217 pulses every second, each pulse being 0.6 ms. long. The modulation during the pulse is Gaussian Minimum Shift Keying (GMSK). This means that the modulation is phase modulation where the modulation phase state travels in a circle around the origin. This results in a flat power curve in the burst. Also there is some ramp-up and ramp-down time allowed for the transmitter, thus making the overall average power slightly less than 1/8 th of the average power in the pulse. A factor of 8.5 is recommended when estimating overall average power compared to peak power. The transmitter power is controlled by the base station, and can change by one 2 dB power step every 60 ms. Figure G-1 shows the waveform of a single 0.6 ms pulse.

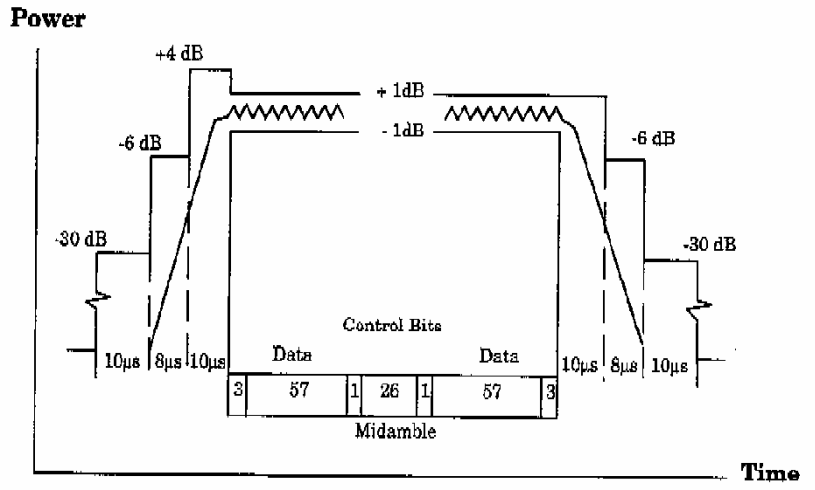

Figure G-1 – GSM power burst

Deleted: Power

Deleted: Burst

DRAFT
Copyright © 2006 IEEE. All rights reserved.
This is an unapproved IEEE Standards Department Draft, subject to change.

Copyright The Institute of Electrical and Electronics Engineers, Inc.
Provided by IHS under license with IEEE
No reproduction or networking permitted without license from IHS
Not for Resale

G.5 CDMA

The Code Division Multiple Access (CDMA) system is the most complicated of all of these digital systems. CDMA has time slots, power control groups, modulation symbols, code symbols and chips all as part of the time varying envelope description. Figure G-2 shows the transmitter on/off pulsing timings, and Figure G-3 shows the time varying envelope in the pulse. There are sixteen power control groups occurring in every 20 ms. time slot, thus making for 800 1.25 ms. long power control groups every second. A power control group is the basic unit of transmission time. Phones may transmit for 1, 2 or 16 successive power control groups. The phone may transmit during 2, 4, 8 or 16 power control groups of each time slot, thus making for the eighth rate, quarter rate, half rate, and full rate VOCODER rates respectively. The VOice COder DEcodeR (VOCODER) rate chosen for any given time slot depends on the amount of data to be sent, which is directly related to the amount of voice activity. Data in the power control group is always sent at a rate of 9.6K bits per second. Each bit is subdivided into 128 “chips”, thus making for 1.228 M chips per second.

The modulation is Offset QPSK, where the modulation phase state travels an irregular path from one state to another, thus the modulation envelope has a large amount of AM component in the power control group (transmit burst). However this AM component is occurring at the 1.2228 MHz chip rate, and is thus much above the audio band. Since all subscriber units on a given channel are transmitting during the same power control group(s), the transmitter power is controlled to an accuracy of ±1 dB. Even the power control group that the subscriber unit will transmit in during the next frame is randomized so that there is a uniform distribution of portables transmitting in all power control groups.

Additionally all subscriber units have two sources of power control. One is the base station that will make fine adjustments (closed loop power control), the other is the subscriber unit itself that will make coarse adjustments (open loop power control) based on the incoming receive signal strength. The base station may command a change of 1 dB in power at every power control group (1.25 ms.), and over a power range of 24 dB. Open loop power control occurs much slower. Open loop power control may have to be disabled by means of a hardware change in some if not all manufacturers phones for the purposes of testing hearing aids. The problem with not disabling open loop power control is that since the subscriber unit operates in the same frequency band as the AMPS system, the subscriber unit will receive the AMPS signals and thus adjust its transmitter power in response to the level of those incoming signals, even in test mode.

DRAFT

Copyright © 2006 IEEE. All rights reserved.
This is an unapproved IEEE Standards Department Draft, subject to change.

Copyright The Institute of Electrical and Electronics Engineers, Inc.
Provided by IHS under license with IEEE
No reproduction or networking permitted without license from IHS Not for Resale

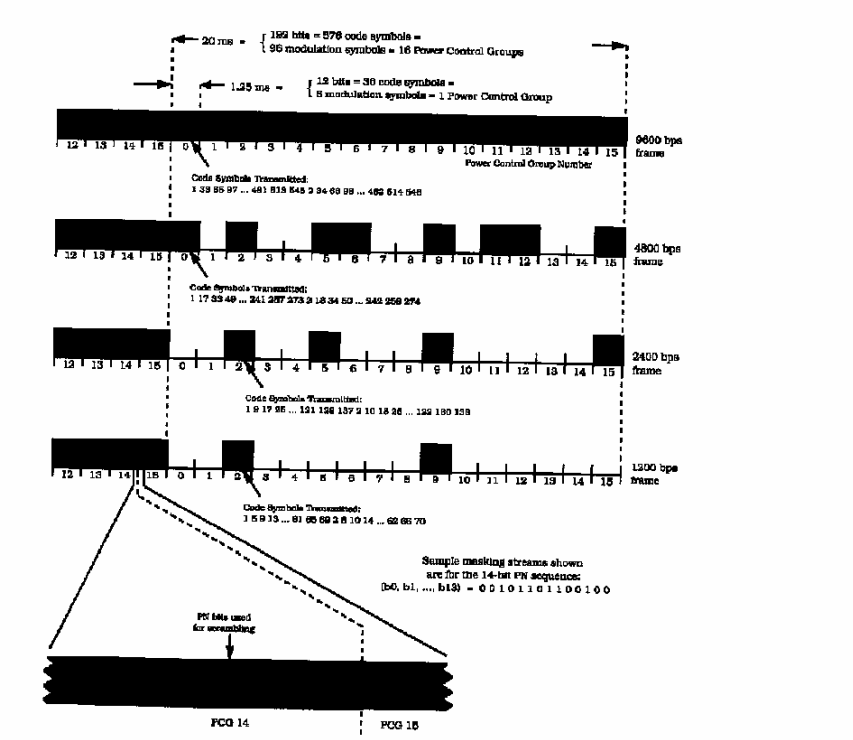

Figure G-2 – Reverse CDMA channel variable data rate transmission example[10]

[10] TIA/EIA/IS-95-A pg. 5-21

DRAFT
Copyright © 2006 IEEE. All rights reserved.
This is an unapproved IEEE Standards Department Draft, subject to change.

Copyright The Institute of Electrical and Electronics Engineers, Inc.
Provided by IHS under license with IEEE
No reproduction or networking permitted without license from IHS
Not for Resale

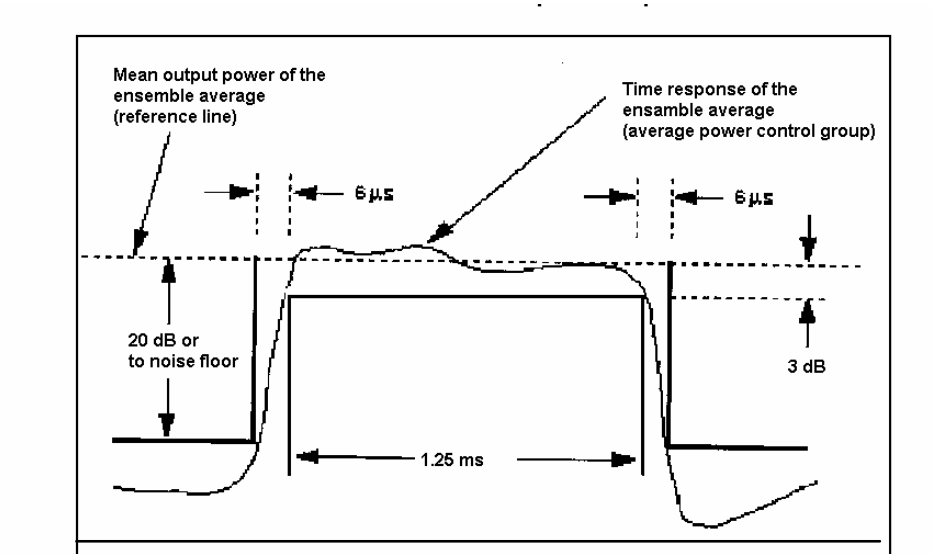

Figure G-3 – CDMA power control group envelope mask transmission envelope mask (average gated power control group)[11]

G.6 IDEN™

The iDEN™ integrated digital enhanced network is used to provide telephony, rapid access two-way dispatch, messaging, paging, circuit data and packet data services in a single handset using a basic time division multiplexed 90 ms frame comprised of six time slots. Telephone service is provided using either one or two time slots per frame at the discretion of the network provider. The suppressed carrier modulation format utilizes four strategically spaced 16-QAM (Quadrature Amplitude Modulation) subcarriers to transmit a 64 kilobits/sec digital signal using a highly linear power amplifier to limit unwanted emissions and provide power control in steps as small as 1 dB. This digital data rate supports up to six voice channels in a 25 kHz RF channel bandwidth.

The power of the transmitter is normally stated as pulse average power (i.e. the power measured over the duration of the voice signal, and excludes a short duration preamble transmitted within the voice signal during the 15 ms period), as this is the significant parameter for telephony coverage area design.

[11] TIA/EIA/IS-95-A

DRAFT
Copyright © 2006 IEEE. All rights reserved.
This is an unapproved IEEE Standards Department Draft, subject to change.

Copyright The Institute of Electrical and Electronics Engineers, Inc.
Provided by IHS under license with IEEE
No reproduction or networking permitted without license from IHS Not for Resale

Annex H. Explanation of rationale used in this standard - (Informative)

Deleted: EXPLANATION

Deleted: OF RATIONALE USED IN THIS STANDARD

Deleted: INFORMATIVE

The testing prescribed in this document has been designed without a simulated or actual human to facilitate test repeatability of measurement as well as ease of use. The performance criteria, as outlined in Section 7, have been determined to reflect a good correlation of measured emissions with actual use.

Validation of this specification accounted for actual in situ testing. The validation process verified test procedures and limits in a non-human test regime. These verification steps included specified testing and clinical trials as well as phone Near-Field and in situ comparisons.

DRAFT
Copyright © 2006 IEEE. All rights reserved.
This is an unapproved IEEE Standards Department Draft, subject to change.

--`,,```,,,,````-`-`,,`,,`,`,,`---

Copyright The Institute of Electrical and Electronics Engineers, Inc.
Provided by IHS under license with IEEE
No reproduction or networking permitted without license from IHS
Not for Resale

Annex I. Measurement of peak power across multiple airlink technologies (Informative)

Deleted: Peak
Deleted: Power
Deleted: Multiple
Deleted: Airlink
Deleted: Technologies

I.1 Introduction

The accurate understanding of an airlink technology's modulation type, power and modulation characteristics is important in understanding of the hearing aid compatibility test process.

The execution of RF power measurement on first generation airlink technologies was relatively simple, primarily because of the constant-envelope signals involved. The nature of power measurement methodologies changed substantially with the introduction of modulation schemes such as CDMA, which display a peak power distribution that is best described statistically. The purpose of this annex is to:

1. Address the issues associated with peak power measurement, including definition of terms
2. Provide examples of peak power measurement methodologies based on statistical processes
3. Investigate the theoretical and/or generally accepted peak-to-average ratios of multiple airlink technologies
4. Present results of lab measurements for multiple airlink technologies emulated in the lab
5. Summarize the findings of these measurements

DRAFT
Copyright © 2006 IEEE. All rights reserved.
This is an unapproved IEEE Standards Department Draft, subject to change.

--`,,```,,,,````-`-`,,`,,`,`,,`---
Copyright The Institute of Electrical and Electronics Engineers, Inc.
Provided by IHS under license with IEEE
No reproduction or networking permitted without license from IHS
Not for Resale

I.2 RF power measurement terminology

Deleted: Power
Deleted: Measurement
Deleted: Terminology

The quantity of concern for the issue of hearing aid compatibility is the variation in the signal that when demodulated will create audible interference. The information in this annex provides an understanding of the complex nature of these transmissions, as an aid to understanding the potential sources for hearing aid interference.

Historically, the measurement of transmitter output power was a relatively simple matter. The constant-envelope modulation schemes used in first-generation analog equipment allowed the use of simple square-law detectors or thermal power measurement devices. The introduction of non constant-envelope digital modulation in TDMA systems complicated the measurement of output power, however, this was easily accommodated by test equipment manufacturers due to the relatively low peak-to-average power ratio. However, with the deployment of a variety of higher-order modulation schemes, the concept of power measurement takes on a whole new meaning. It is no longer possible to utilize simple average-reading power detection systems. Instead, high-speed detectors have become the rule, and because of the higher peak-to-average ratios inherent in the more complex modulation schemes, a means of defining output power both as an average as well as a peak value becomes crucial.

At this point it's important to define the term "peak" power, because this term often causes a great deal of confusion. "Peak" power may be defined as the *Peak Envelope Power (PEP)* ($V_{pk}^2/2R$), or as *instantaneous peak power* (V_{pk}^2/R).

It's very important to make a clear distinction between these two, as it can otherwise result in a 3 dB discrepancy between measured and expected values. For example, the peak-to-average ratio of a CW signal is 0 dB when measured in terms of PEP, while this same CW signal has an instantaneous peak-to-average power ratio of 3 dB. Spectrum analyzers are typically calibrated in terms of RMS-equivalent power, so RF envelope power measurements (made in the time domain using zero-span, for example) quantify peak power in terms of an RMS equivalent, which equates to PEP. In the case of complex signals such as CDMA, instantaneous peak power becomes difficult to determine, and peak envelope power becomes the primary consideration. All peak power measurements in this annex refer to peak envelope power.

I.3 Statistical RF power measurement

Deleted: Power
Deleted: Measurement

Establishing the value of peak power can become difficult depending upon the nature of the airlink technology. For example, power measurement is relatively straightforward with constant-modulation schemes such as those used for AMPS or GSM, but complex modulation schemes such as CDMA require special considerations in order to take the statistical aspects of the signal into account.

In the past, statistical RF power measurements have been exceedingly difficult to perform. In the early 1990's (when modulation schemes with high peak-to-average ratios were just becoming commonplace), several methodologies to the problem of measuring peak power were proposed. One such method required the use of an average power meter, mixer, pulse generator, and frequency counter[12]. This method could be used to provide a statistical distribution of RF output power, but it was exceedingly time intensive. Fortunately, by the mid 1990's, DSP technology had advanced to the point where it was a relatively simple task to measure the signal's peak envelope power, calculate the average power, and place the measured peak power values into bins for the calculation of a Cumulative Distribution Function (CDF) or a Complementary Cumulative Distribution Function (CCDF)[13].

One such example of a test instrument capable of supporting statistical power measurements is the Vector Signal Analyzer. This device is capable of supporting a wide array of parametric measurements applicable to any 2G and

[12]C.W. Rhodes, "*Measuring Peak and Average Power of Digitally Modulated Advanced Television Systems*", IEEE Transactions on Broadcasting, December, 1992, pp 197-201.

[13]A. Christman, R.P. Zeineddin, R. Radcliff and J. Breakall, *"Measuring Peak/Average Power Ratio of the Zenith/AT&T DSC-HDTV Signal with Vector Signal Analyzer",* IEEE Transactions on Broadcasting, June, 1993, pp. 255-264

DRAFT
Copyright © 2006 IEEE. All rights reserved.
This is an unapproved IEEE Standards Department Draft, subject to change.

Copyright The Institute of Electrical and Electronics Engineers, Inc.
Provided by IHS under license with IEEE
No reproduction or networking permitted without license from IHS
Not for Resale

3G transmission platform, and it is especially useful when performing statistical RF power measurements. For any given input signal within its range, the instrument can be configured to display the time-domain RF power envelope, the frequency-domain spectral composition, the time-domain average power, the time-domain peak envelope power (at a user-specified probability of occurrence), and the peak-to-average ratio (in dB). In addition, the instrument is capable of providing the user with a real-time display of the input signal's peak power (in dB) above the average power, expressed as likelihood of occurrence. This data is presented in the form of a Complementary Cumulative Distribution Function (CCDF). The number of samples used to create the CCDF is updated in real time as is the average power.

In this section, measurements made with a vector signal analyzer were used to confirm the theoretical peak-to-average ratio for each airlink technology in common use today.

I.4 Peak envelope power vs. airlink technology

The sections that follow describe both the theoretical and measured PEP of each airlink technology currently in common use within the United States.

Deleted: Envelope
Deleted: Power
Deleted: Airlink
Deleted: Technology

DRAFT
Copyright © 2006 IEEE. All rights reserved.
This is an unapproved IEEE Standards Department Draft, subject to change.

Copyright The Institute of Electrical and Electronics Engineers, Inc.
Provided by IHS under license with IEEE
No reproduction or networking permitted without license from IHS
Not for Resale

I.4.1 CW, AMPS and GSM

By definition, constant envelope modulation schemes such as unmodulated CW, FM (used in AMPS) and GMSK (used in GSM) all display a peak-to-average ratio of 0 dB PEP. In the case of GSM, the DUT may display a slight increase in power at the leading (and in some cases, the trailing) edge of the pulse. However, this increase in power is minimal, and should result in an insignificant peak-to-average ratio.

I.4.1.1 Amplitude modulation (double sideband)

Amplitude modulation is a non-constant envelope signal, the average power of which is defined by the signal's modulation index m. For example, an unmodulated carrier (Pcarrier) with a power of 1 W (+30 dBm) and a modulation index of 0.8 (80% modulation) has an average power of 1.3 W (+31.2 dBm), as shown in Equation I.1.[14]

(Eq I.1) **Calculation of AM average power with amplitude modulation**

$$P_{carrier} = \frac{\left(\frac{E_{Peak}}{\sqrt{2}}\right)^2}{R_{Load}} \qquad P_{average} = P_{carrier}\left(1 + \frac{m^2}{2}\right)$$

Equation I.2 describes the calculation of peak envelope power when the modulation index is known. At a modulation index of 1.0 (100% modulation), Epeak doubles; consequently, the current also doubles (assuming a non-reactive load). Therefore, the peak envelope power increases by a factor of four over the unmodulated carrier power. Lower values of m will result in correspondingly lower values of PEP. For example, Equation I.2 indicates that the PEP of a 1 W (+30 dBm) carrier with 80% modulation is 3.24 W (+35.1 dBm).

(Eq I.2) **Calculation of AM peak envelope power**

$$PEP_{AM} = P_{carrier} \cdot (m+1)^2$$

Equation I.3 describes the calculation of AM peak-to-carrier ratio when the modulation index is known. For example, Equation I.3 indicates that the peak-to--(unmodulated) carrier is 5.1 dB while Equation I.4 indicates the peak-to-average of a signal with 80% modulation is 3.9 dB.

(Eq I.3) **Calculation of AM peak-to-carrier ratio (PCR)**

$$PCR_{dB} = 10\log(m+1)^2$$

(Eq I.4) **Calculation of AM peak-to-average ratio (PAR)**

[14] Equation I.1 is included to make the reader sensitive to the difference values when measuring the average power of the unmodulated carrier and the modulated signal. This difference also can occure between the power of a modulated signal as measured with an average-reading power meter and the power measured on an oscilloscope or peak-reading power meter. As the equation shows, there is a 1.2 dB difference in these values.

Deleted: Modulation
Deleted: Double
Deleted: Sideband
Deleted: Average
Deleted: Power
Deleted: Amplitude
Deleted: Modulation
Deleted: Peak
Deleted: Envelope
Deleted: Power
Deleted: carrier
Deleted: 5.1
Deleted: <sp>¶
Formatted: Equation, Centered, Space Before: 11 pt, After: 7 pt, Line spacing: At least 14 pt
Deleted: Peak
Deleted: Carrier
Deleted: Ratio
Formatted: Lowered by 5 pt
Formatted: Centered, Indent: Left: 0 pt, Tabs: Not at 126 pt

DRAFT
Copyright © 2006 IEEE. All rights reserved.
This is an unapproved IEEE Standards Department Draft, subject to change.

Copyright The Institute of Electrical and Electronics Engineers, Inc.
Provided by IHS under license with IEEE
No reproduction or networking permitted without license from IHS
Not for Resale

$$PAR_{dB} = 10\log((m+1)^2/(1+\frac{m^2}{2}))$$

Formatted: Lowered by 7 pt

Deleted: <sp>¶

I.4.2 TDMA (IS-136)

TDMA utilizes p/4 DQPSK modulation, which limits the severity of zero-crossings, minimizing the peak-to-average ratio of the transmitted signal. According to Tropian[15], the peak-to-average ratio of TDMA (IS-136) is 3.5 dB, although no probability of occurrence is associated with this number. To confirm this validity of this value, a CCDF for an NADC signal was measured. The signal source was configured to emulate a traffic channel using p/4 DPQSK modulation and the associated NADC symbol rate in all eight time slots. The result of this measurement is depicted in Figure I-1. Under the test conditions just described, a peak-to-average ratio of about 3.1 dB was measured at a probability of 99.9%, with a PAR of 3.2 dB at 99.999%. This measurement agrees quite well with the 3.5 dB peak-to-average ratio cited.

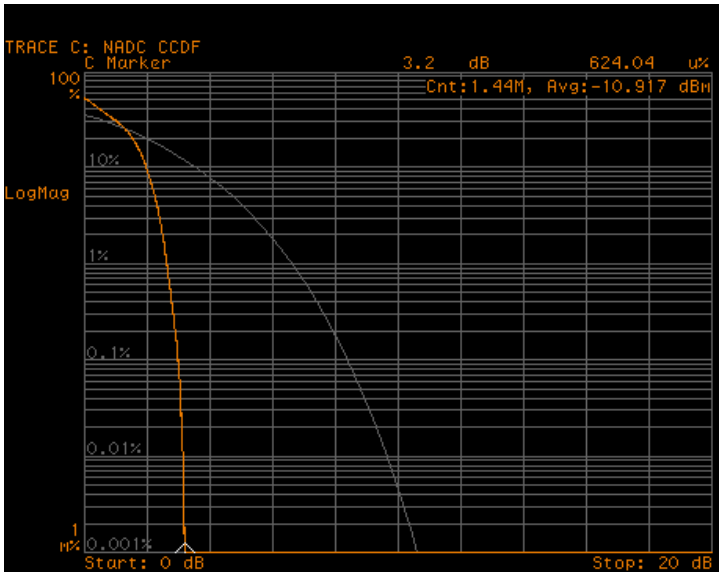

Figure I-1 - CCDF of a simulated NADC signal generated by a signal generator

[15] *"Polar Modulation: An Alternative for Software Defined Radio"*, Tropian presentation to International Symposium on Advanced Radio Technologies, March 6, 2002, Boulder, CO, Page 6 available at the following URL: http://www.its.bldrdoc.gov/meetings/art/art02/slides02/mcc/mcc_slides.pdf

DRAFT
Copyright © 2006 IEEE. All rights reserved.
This is an unapproved IEEE Standards Department Draft, subject to change.

Copyright The Institute of Electrical and Electronics Engineers, Inc.
Provided by IHS under license with IEEE
No reproduction or networking permitted without license from IHS
Not for Resale

I.4.3 *i*DEN

*i*DEN utilizes proprietary M16-QAM, the characteristics of which are not well documented in publicly-available papers. During lab measurements of an *i*DEN device, the peak-to-average ratio measured 5.9 dB. This is in reasonable agreement with lab measurements of a conventional 16QAM signal, the statistical distribution of which is depicted in Figure I-2. As the CCDF in this figure indicates, the peak-to-average ratio reaches about 4.8 dB at a probability of 99.9%, and 5.52 dB at a probability of 99.999%. This agrees reasonably well with the measured value of 5.9 dB in the Motorola lab.

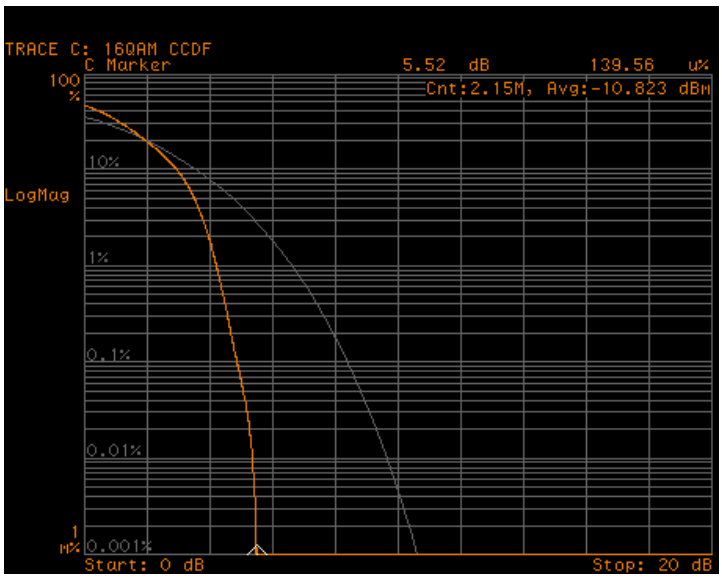

Figure I-2 - CCDF of a 16QAM signal produced by a signal generator

DRAFT
Copyright © 2006 IEEE. All rights reserved.
This is an unapproved IEEE Standards Department Draft, subject to change.

Copyright The Institute of Electrical and Electronics Engineers, Inc.
Provided by IHS under license with IEEE
No reproduction or networking permitted without license from IHS
Not for Resale

I.4.4 CDMA (IS-95)

CDMA utilizes direct sequence spread spectrum operating over a 1.23 MHz bandwidth with QPSK modulation. The essentially random phase distribution of the individual components of this signal result in a statistical distribution that begins to approximate Gaussian noise. In IS-95, the uplink and downlink peak-to-average ratio differ somewhat, in part because of the presence of downlink pilots that are not required on the reverse link. According to graphs presented by Sevic and Steer[16], the peak-to-average ratio of an IS-95 reverse link is about 3.8 dB at 99.9% probability, and about 5 dB at 99.999% probability.

To confirm the PAR values presented by Sevic and Steer, an IS-95 reverse-link traffic channel was generated using a signal source capable of emulating an IS-95 uplink. The CCDF of this signal was calculated and measured, the result is depicted in Figure I-3. This figure indicates that the measured PAR for an IS-95 signal is about 3.8 dB at 99.9% probability, and 5.2 dB at 99.999% probability. These values are in excellent agreement with those provided by Sevic and Steer.

Figure 1.4 CCDF of a Simulated IS-95 Reverse-Link Traffic Channel

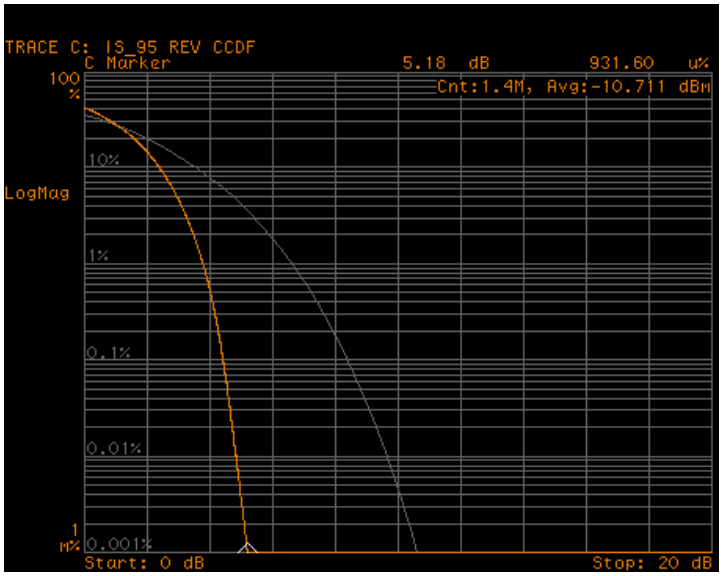

Figure I-3 - CCDF of a simulated IS-95 reverse-link traffic channel

[16] "*On the Significance of Envelope Peak-to-Average Ratio for Estimating the Spectral Regrowth of an RF/ Microwave Power Amplifier*", John F. Sevic and Michael B. Steer, IEEE Transactions on Microwave Theory and Techniques, Vol. 48, No. 6, June 2000, page 1069.

DRAFT
Copyright © 2006 IEEE. All rights reserved.
This is an unapproved IEEE Standards Department Draft, subject to change.

Copyright The Institute of Electrical and Electronics Engineers, Inc.
Provided by IHS under license with IEEE
No reproduction or networking permitted without license from IHS
Not for Resale

I.4.5 WCDMA (UMTS)

WCDMA utilizes direct sequence spread spectrum operating over a 3.84 MHz bandwidth with QPSK modulation. In WCDMA, optimized scrambling codes are employed by the mobile to maintain a low PAR on the uplink. According to Ali-Ahmad[17], the typical peak-to-average ratio of a WCDMA reverse link with one active voice channel (one DPCCH and one DPDCH) is about 3.1 dB at 99.9% probability, and about 3.5 dB at 99.999% probability.

To confirm the PAR values presented by Ali-Ahmad, the CCDF of a WCDMA reverse-link traffic channel from a commercial UMTS handset was measured and the result of this measurement is depicted in Figure I-4. This figure indicates that the measured PAR for a WCDMA signal is about 3.3 dB at 99.9% probability, and 3.7 dB at 99.999% probability. The measured PAR values are in excellent agreement with those published by Ali-Ahmad.

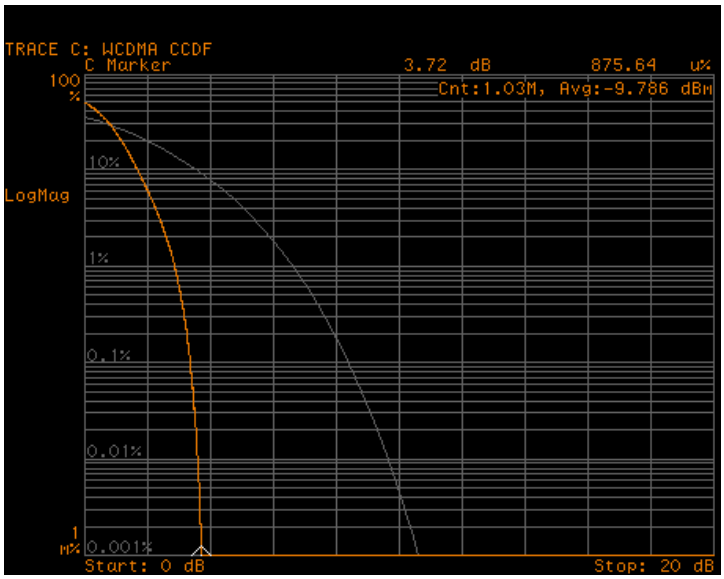

Figure I-4 - CCDF of a WCDMA reverse-link traffic channel

I.4.6 Summary

The results of PAR measurements made for non-constant envelope signals are summarized in Table I-1. As this table indicates, the PAR of an AM signal at 80% modulation (the signal used for hearing aid immunity tests) closely approximates the PAR of CDMA (IS-95). The PAR of 80% AM is about 1 dB lower than *i*DEN, 2 dB higher than TDMA (IS-136), and about the same as WCDMA. The PAR of an 80% AM signal is about 5 dB higher than constant envelope signals such as AMPS or GSM.

Modulation	Theoretical PAR	Measured PAR at 99.9% probability	Measured PAR at 99.999% probability

[17] "Effective IM2 estimation for two-tone and WCDMA modulated blockers in zero-IF", Walid Y. Ali-Ahmad, RF Design, April, 2004, page 34

DRAFT
Copyright © 2006 IEEE. All rights reserved.
This is an unapproved IEEE Standards Department Draft, subject to change.

--`,,```,,,,````-`-`,,`,,`,`,,`---

Copyright The Institute of Electrical and Electronics Engineers, Inc.
Provided by IHS under license with IEEE
No reproduction or networking permitted without license from IHS
Not for Resale

80% AM	5.1 dB	4.8 dB	4.9 dB
TDMA (IS-136)	3.5 dB	3.1 dB	3.2 dB
*i*DEN	Unknown	Unknown	5.9 dB[18]
CDMA (IS-95)	Varies	3.8 dB	5.2 dB
WCDMA (UMTS)	3.5	3.3 dB	3.7 dB

Table I-1 - Comparison of theoretical vs. measured PAR values for non-constant envelope airlink technologies

The CCDFs plotted for each of the four airlink technologies included in Table I-1 indicate that the difference in PAR between 99.9% and 99.999% probability is minimal, with the exception of CDMA (IS-95) and possibly *i*DEN (further data are needed to confirm this). However, this may not hold true going forward, as some 3G technologies that utilize complex modulation schemes may have a significantly higher PAR at 99.999% than at 99.9% probability.

I.5 Conclusion

This annex presents a standardized definition for peak power, and a statistical means of measuring it. This annex also discusses the correlation between theoretical and/or generally accepted PAR values for multiple airlink technologies vs. their corresponding measured values. While the signals used to make most of these measurements were emulated by a signal generator (as opposed to generated by actual devices), the results should still prove representative of the general PAR range associated with each airlink technology. From the measurements presented, there appears to be very good correlation between the theoretical and actual values of PAR for multiple airlink technologies at a probability of 99.999%. However, the CCDF curves of future airlink technologies (which may emulate the statistics of Gaussian noise) must be considered in order to establish a reasonable PAR baseline for HAC compliance measurement.

[18] This value was measured and an approximation of an *i*DEN signal yielded a similar value of 5.5 dB

DRAFT

Copyright © 2006 IEEE. All rights reserved.
This is an unapproved IEEE Standards Department Draft, subject to change.

--`,,```,,,,````-`-`,,`,,`,`,,`---

Copyright The Institute of Electrical and Electronics Engineers, Inc.
Provided by IHS under license with IEEE
No reproduction or networking permitted without license from IHS Not for Resale

Deleted: Application
Deleted: Forms
Deleted: INFORMATIVE

Annex J. Sample HAC application forms (Informative)

The following sample forms were developed in order to facilitate the regulatory acceptance of HAC WDs. The Summary form is used for each WD application. The supporting forms are needed for the E- & H-Field data - one set each for each frequency supported.

Summary Form Items in blue are filed in by the manufacture submitting the report. The complete test report will contain additional information, such as information on test instrumentation used, e.g. model and serial number of the E- and H-field probes used, and their last calibration date.

ANSI C63.19 Wireless Device Test Data				
LAB	Wireless Device Manufacturer	Facility		
	Contact Name	John Doe		
	Contact	123-456-7890		
	Contact Email	John.doe@facility.co		
	Contact	#234		
	Contact	Street		
	Contact	State		
	Contact Zip	12345		
RF INFORMATIO	Wireless Device FCC ID	FCC ID ABC-		
	Test Date	6-Apr-04	6-Apr-04	
	RF Air Interface	GS	GSM	
	AW	-5	-5	
	Test Method (In Call vs. Test	IN CALL	IN CALL	
	Radio Transmit Frequency	850	1880	
	Scan increment (mm)	5	5	
	Measurement Uncertainty	1.4	1.4	
RF AND M-	Highest Measured E-Field converted to Peak	45.7	45.7	
	E-Field Probe Modulation Factor	9.0	9.0	
	Total E-Field Emissions with Probe Modulation Factor	54.7	54.7	
	E-Field M-Rating Criteria from ANSI C63.19	Peak E-Field Emissions		
		Category	AWF = 0	AWF = -5	Units
		M1	46 to 51	43.5 to 48.5	dB(V/m)
		M2	41 to 46	38.5 to 43.5	dB(V/m)
		M3	36 to 41	33.5 to 38.5	dB(V/m)
		M4	<36	<33.5	dB(V/m)
	E-Field M	M		M	
	Highest Measured H-Field converted to Peak	-		-	
	H-Field Probe Modulation Factor	9.0		9.0	
	Total H-Field Emissions with Probe Modulation Factor	8.2		8.2	
	H-Field M-Rating Criteria from ANSI C63.19	Peak H-Field Emissions		
		Category	AWF = 0	AWF = -5	Units
		M1	-4.4 to 0.6	6.9 to -1.9	dB(A/m)
		M2	-9.4 to -4.4	-11.9 to -6.9	dB(A/m)
		M3	-14.4 to -9.4	-16.9 to -11.9	dB(A/m)
		M4	<14.4	<-16.9	dB(A/m)
	H-Field M	M		M	
	Total M	M			
T- RESULTS AND T-	T-Rating	NR			
	Signal Quality	31.4			
	Magnetic Signal Strength Axial (dB	-			
	Magnetic Signal Strength Radial 1 (dB	-			
	Magnetic Signal Strength Radial 2 (dB	-			
	Frequency Response curve passes	No			

Figure J-1 - Summary report

DRAFT

Copyright © 2006 IEEE. All rights reserved.
This is an unapproved IEEE Standards Department Draft, subject to change.

Copyright The Institute of Electrical and Electronics Engineers, Inc.
Provided by IHS under license with IEEE
No reproduction or networking permitted without license from IHS
Not for Resale

J.1 E-Field technical report

Deleted: T

Deleted: R

Measured data graphic and sub grid data are supplied by the submitting manufacturer.

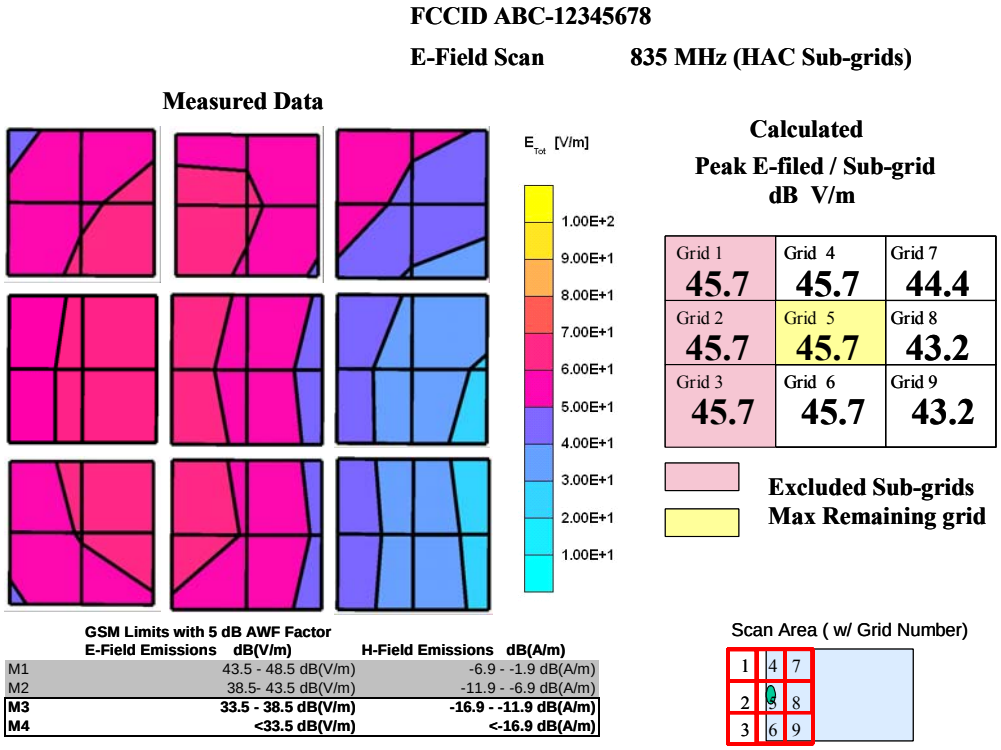

GSM Limits with 5 dB AWF Factor	E-Field Emissions dB(V/m)	H-Field Emissions dB(A/m)
M1	43.5 - 48.5 dB(V/m)	-6.9 - -1.9 dB(A/m)
M2	38.5- 43.5 dB(V/m)	-11.9 - -6.9 dB(A/m)
M3	**33.5 - 38.5 dB(V/m)**	**-16.9 - -11.9 dB(A/m)**
M4	**<33.5 dB(V/m)**	**<-16.9 dB(A/m)**

Figure J-2 – E-Field technical report

DRAFT
Copyright © 2006 IEEE. All rights reserved.
This is an unapproved IEEE Standards Department Draft, subject to change.

Copyright The Institute of Electrical and Electronics Engineers, Inc.
Provided by IHS under license with IEEE
No reproduction or networking permitted without license from IHS
Not for Resale

Deleted: T
Deleted: R
Deleted: :

J.2 H-Field technical report

Measured data graphic and sub grid data are supplied by the submitting manufacturer.

FCCID ABC-12345678

H-Field Scan 835 MHz (HAC Sub-grids)

Measured Data

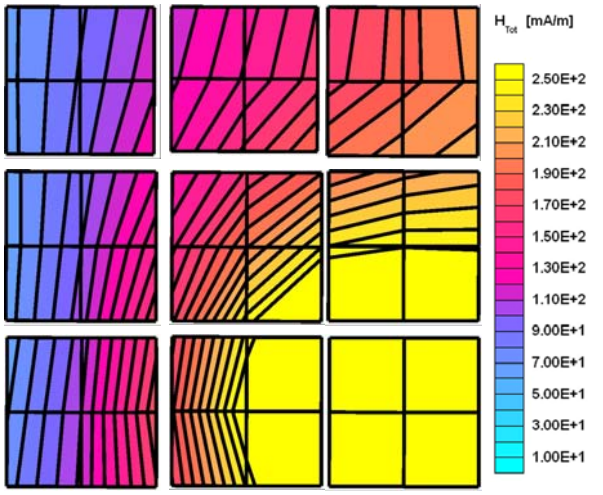

GSM Limits with 5 dB AWF Factor	E-Field Emissions dB(V/m)	H-Field Emissions dB(A/m)
M1	43.5 - 48.5 dB(V/m)	-6.9 - -1.9 dB(A/m)
M2	38.5- 43.5 dB(V/m)	-11.9 - -6.9 dB(A/m)
M3	**33.5 - 38.5 dB(V/m)**	**-16.9 - -11.9 dB(A/m)**
M4	**<33.5 dB(V/m)**	**<-16.9 dB(A/m)**

Calculated
Peak H-filed / Sub-grid
dB A/m

Grid 1 **-8.2**	Grid 4 **-4.8**	Grid 7 **-3.8**
Grid 2 **-5.9**	Grid 5 **-0.8**	Grid 8 **-0.6**
Grid 3 **-5.4**	Grid 6 **0.3**	Grid 9 **1.0**

Excluded Sub-grids
Max Remaining grid

Scan Area (w/ Grid Number)

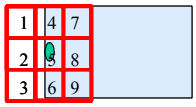

DRAFT

Copyright © 2006 IEEE. All rights reserved.
This is an unapproved IEEE Standards Department Draft, subject to change.

Copyright The Institute of Electrical and Electronics Engineers, Inc.
Provided by IHS under license with IEEE
No reproduction or networking permitted without license from IHS
Not for Resale

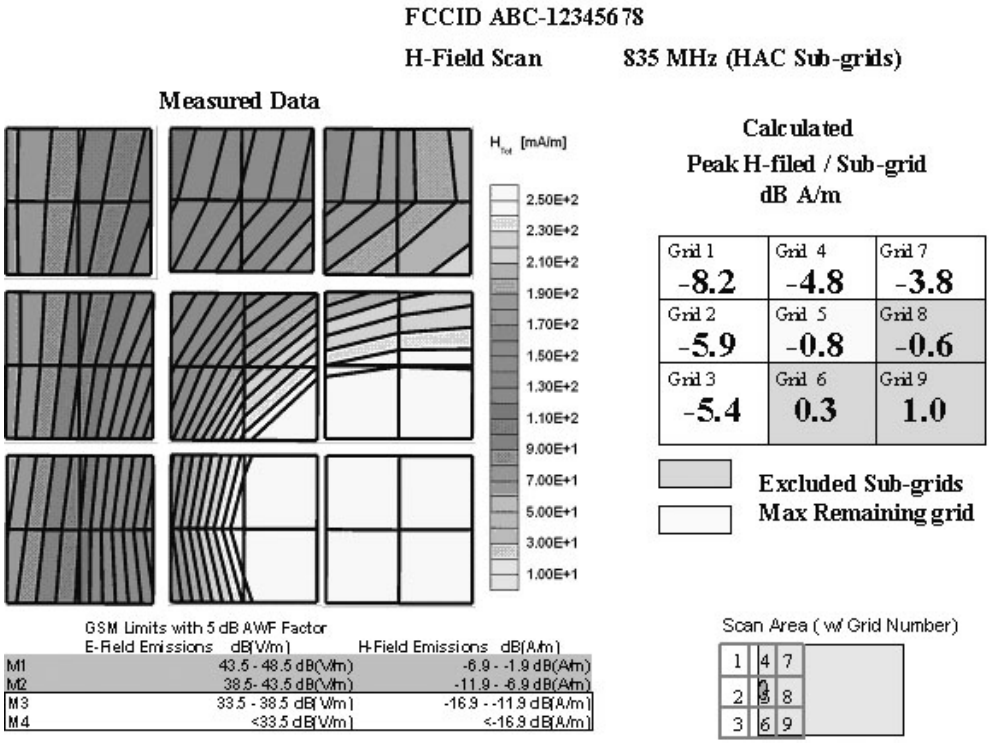

Figure J-3 – H-Field technical report

DRAFT
Copyright © 2006 IEEE. All rights reserved.
This is an unapproved IEEE Standards Department Draft, subject to change.

--`,,```,,,,````-`-`,,`,,`,`,,`---
Copyright The Institute of Electrical and Electronics Engineers, Inc.
Provided by IHS under license with IEEE
No reproduction or networking permitted without license from IHS
Not for Resale

Revision History

DATE	REV.	DESCRIPTION
9/3/03	Rev 1.0	1st revision draft from comments received from ATIS HAC Incubator.
10/24/03	Rev 2.0	Revisions received on revision draft 1.0. Version 2 was the basis for the WG discussions on Oct. 28, 2003.
10/30/03	Rev 2.1	Editor's interim version.
11/15/03	Rev 2.2	Revision based on comments received at October 28, 2003 meeting and in follow-up to action items assigned at the meeting.
12/3/02	Rev 2.4	Draft released for 2 week pre-ballot review.
12/22/03	Rev 2.5	Draft released for C63 ballot.
3/12/04	Rev 2.6	Accept all changes from Rev. 2.5 and record new changes per comments received during ballot.
3/22/04	Rev 2.7	**Further revisions after review of proposed changes in vs. 2.6 with commenters.**
6/24/04	Rev 2.8	Final draft released for recirculation ballot.
9/27/04	Rev 3.0	draft for 2nd recirculation ballot.
10/7/04	Rev 3.1	Final draft released for recirculation ballot.
11/6/04	Rev 3.2	Accept all changes from Rev. 3.1 and record new changes per comments received during 2nd recirculation ballot.
12/28/04	Rev 3.3	Continuation of Rev. 3.2 after Dec. 2004 editing meeting.
1/30/05	Rev 3.3	Draft for 3rd reciculation ballot.
3/6/05	Rev 3.4	Draft Rev. 3.3 with changes accepted, track changes on comments received in 3rd recirculation
4/12/05	Rev 3.5	Draft released for ANSI review and approval.
4/14/05	Rev 3.6	Figure C-1 reinserted.
8/31/05	Rev 3.7	Prepared in response to public comments
9/28/05	Rev 3.8	Prepared from discussions at Sept. 27, 2005 meeting in preparation for 4th recirculation ballot.
11/1/05	Rev 3.9	Prepared in response to committee discussions in preparation for 4th recirculation ballot.
11/4/05	Rev 3.10	Prepared and submitted for 4th recirculation ballot.
1/4/06	Rev 3.11	Prepared with responses to comments received from the 4th recirculation ballot. This version was distributed for use during the Jan. 9-10, 2006 WG meeting.
1/18/06	Rev 3.12	Version released for ANSI Public Comments. Contains editorial changes agreed to at the Jan. 9-10, 2006 meeting.

DRAFT

Copyright © 2006 IEEE. All rights reserved.
This is an unapproved IEEE Standards Department Draft, subject to change.

Copyright The Institute of Electrical and Electronics Engineers, Inc.
Provided by IHS under license with IEEE
No reproduction or networking permitted without license from IHS Not for Resale