

American National Standard Guide for Construction of Open-Area Test Sites for Performing Radiated Emission Measurements

Accredited by the American National Standards Institute

Sponsored by the
Accredited Standards Committee on Electromagnetic Compatibility, C63

C63.7

IEEE
3 Park Avenue
New York, NY 10016-5997, USA

7 April 2006

ANSI C63.7-2005
(Revision of ANSI C63.7-1992)

--`,,```,,,,````-`-`,,`,,`,`,,`---

Copyright The Institute of Electrical and Electronics Engineers, Inc.
Provided by IHS under license with IEEE
No reproduction or networking permitted without license from IHS

Not for Resale

and Electronics Engineers, Inc.
IEEE
nitted without license from IHS
Not for Resale

ANSI C63.7-2005
(Revision of
ANSI C63.7-1992)

American National Standard Guide for Construction of Open-Area Test Sites for Performing Radiated Emission Measurements

Accredited Standards Committee on Electromagnetic Compatibility, C63

accredited by the

American National Standards Institute

Secretariat

Institute of Electrical and Electronic Engineers, Inc.

Approved 7 October 2005

American National Standards Institute

Abstract: Information that is useful in constructing an open-area test site used to perform radiated emission measurements in the frequency range of 30 MHz to 1000 MHz is provided. Final validity of the test site can only be made by performing site attenuation measurements as described in ANSI C63.4-2003.
Keywords: emission measurement, open-area test sites, radiated emission measurement

---

The Institute of Electrical and Electronics Engineers, Inc.
3 Park Avenue, New York, NY 10016-5997, USA

Copyright © 2006 by the Institute of Electrical and Electronics Engineers, Inc.
All rights reserved. Published 7 April 2006. Printed in the United States of America.

Print: ISBN 0-7381-4907-1 SH95518
PDF: ISBN 0-7381-4908-X SS95519

No part of this publication may be reproduced in any form, in an electronic retrieval system or otherwise, without the prior written permission of the publisher.

--`,,```,,,,````-`-`,,`,,`,`,,`---

Copyright The Institute of Electrical and Electronics Engineers, Inc.
Provided by IHS under license with IEEE
No reproduction or networking permitted without license from IHS Not for Resale

American National Standard

An American National Standard implies a consensus of those substantially concerned with its scope and provisions. An American National Standard is intended as a guide to aid the manufacturer, the consumer, and the general public. The existence of an American National Standard does not in any respect preclude anyone, whether he has approved the standard or not, from manufacturing, marketing, purchasing, or using products, processes, or procedures not conforming to the standard. American National Standards are subject to periodic review and users are cautioned to obtain the latest editions.

CAUTION NOTICE: This American National Standard may be revised or withdrawn at any time. The procedures of the American National Standards Institute require that action be taken to reaffirm, revise, or withdraw this standard no later than five years from the date of publication. Purchasers of American National Standards may receive current information on all standards by calling or writing the American National Standards Institute.

Authorization to photocopy portions of any individual standard for internal or personal use is granted by the Institute of Electrical and Electronics Engineers, Inc., provided that the appropriate fee is paid to Copyright Clearance Center. To arrange for payment of licensing fee, please contact Copyright Clearance Center, Customer Service, 222 Rosewood Drive, Danvers, MA 01923 USA; (978) 750-8400. Permission to photocopy portions of any individual standard for educational classroom use can also be obtained through the Copyright Clearance Center.

--`,,```,,,,````-`-`,,`,,`,`,,`---

Copyright The Institute of Electrical and Electronics Engineers, Inc.
Provided by IHS under license with IEEE
No reproduction or networking permitted without license from IHS Not for Resale

Introduction

This introduction is not part of ANSI C63.7-2005, American National Standard Guide for Construction of Open-Area Test Sites for Performing Radiated Emission Measurements.

ANSI C63.4, American National Standard Methods of Measurement of Radio-Noise Emissions from Low-Voltage Electrical and Electronic Equipment in the Range of 9 kHz to 40 GHz, has undergone several revisions since the original document covering methods of measurement was produced in 1940. While many improvements were made in this standard up to the current version published in early 2004, the reproducibility of measurements or radiated interference from one open-area test site (OATS) to another had not been completely satisfactory.

In 1982, a concerted effort was organized in Subcommittee One of Accredited Standards Committee C63, to determine how the OATS technique could be improved. Evidence showed that the variability at the time was due, in part, to inadequate: a) control of the site ground plane conductivity, its flatness, site enclosure effects, and certain other characteristics; b) accounting for antenna factors, associated cabling, and balun and equipment under test (EUT) characteristics; and c) consideration of mutual coupling effects between the EUT and the receiving antennas and their images in the conducting ground plane. Accordingly, after over five years of deliberations and investigations, ANSI C63.4 was revised. In the same year, ANSI C63.5 (American National Standard for Radiated Emission Measurements in Electromagnetic Interference (EMI) Control—Calibration of Antennas), ANSI C63.6 (American National Standard for Open Area Test Site Measurements—Guide for Computation of Errors), and ANSI C63.7 (American National Standard Guide for Construction of Open Areas Test Sties for Performing Radiated Emission, Measurements) were first published. All of this occurred in 1988.

In 1992, the next edition of ANSI C63.7 was published. That update included improvements to the text resulting from experience testing at an OATS, which even today serves as the reference test site for performing radiated emission measurements. These measurements continue to be used to determine product compliance to radiated emission limits, although there are other test facilities that are used such as semianechoic chambers, which replicate an OATS as both have conductive ground planes and both are validated using the normalized site attenuation technique contained in ANSI C63.4.

This edition of ANSI C63.7 further improves on the 1992 edition by clarifying and elaborating how: a) cables from the receiving antenna should be routed; b) the metal conducting ground plane should be treated when exposed to the weather; c) choices can be made for the ground plane material; and d) the slope of the ground plane affects the test site.

The following members of the C63 Committee served as task group leaders on this revision:

Donald N. Heirman
Edwin L. Bronaugh

Copyright © 2006 IEEE. All rights reserved.

Copyright The Institute of Electrical and Electronics Engineers, Inc.
Provided by IHS under license with IEEE
No reproduction or networking permitted without license from IHS
Not for Resale

Participants

At the time this guide was published, the Accredited Standards Committee on Electromagnetic Compatibility, C63, had the following membership:

Ralph M. Showers, *Chair*

Donald N. Heirman, *Vice Chair*

Robert L. Pritchard, *IEEE Secretariat*

Organization Represented	*Name of Representative*
Alliance for Telecom Industry Solutions (ATIS)	Chrys Chrysanthou
	James Turner *(Alt.)*
American Council of Independent Laboratories (ACIL)	Michael F. Violette
	William Stumpf *(Alt.)*
American Radio Relay League (ARRL)	Dennis Bodson
	Edward F. Hare *(Alt.)*
Cisco Systems	Werner Schaefer
Curtis-Straus LLC	Jon Curtis
	Jonathan Stewart *(Alt.)*
Dell Inc.	Barry R. Wallen
	Richard Worley *(Alt.)*
ETS-Lindgren	Michael Foegelle
	Zhong Chen *(Alt.)*
Federal Communications Commission (FCC)	William Hurst
Food and Drug Administration (FDA)	Jon P. Casamento
	Jeffrey L. Silberberg *(Alt.)*
Hewlett-Packard Company	Kenneth Hall
	Colin Brench *(Alt.)*
Information Technology Industry Council (ITIC)	John Hirvela
	Joshua Rosenberg *(Alt.)*
Institute of Electrical and Electronics Engineers, Inc. (IEEE)	Donald N. Heirman
IEEE-EMCS	Stephen Berger
	Donald Sweeney *(Alt.)*
Lucent Technologies	Dheena. Moogilan
National Institute of Standards and Technology	Dennis Camell
Society of Automotive Engineers (SAE)	Poul Andersen
TUV-America, Inc.	David Zimmerman
	Joel Schneider *(Alt.)*
Underwriters Laboratories	Michael Windler
	Robert Delisi *(Alt.)*
U.S. Dept. of Defense—Joint Spectrum Center	Marcus Shellman
	Joseph Snyder *(Alt.)*
U.S. Dept. of the Navy—SPAWAR	David Southworth
Members-at-Large	Robert Hofmann
	Daniel Hoolihan
	Warren Kesselman*
	John Lichtig
	Herbert Mertel*
	Ralph M. Showers
	Norman Violette*

*Member Emeritus

Copyright © 2006 IEEE. All rights reserved.

Copyright The Institute of Electrical and Electronics Engineers, Inc.
Provided by IHS under license with IEEE
No reproduction or networking permitted without license from IHS
Not for Resale

Contents

1. Scope 1

2. Normative references 1

3. Definitions 2

4. General considerations 2

5. Obstruction-free area 2

6. Ground plane 5

6.1 Size and shape of ground plane 5
6.2 Smoothness of ground plane 5
6.3 Ground-plane material 6
6.4 Ground-plane earthing 7

7. Measurement facilities 7

7.1 Turntables 7
7.2 Services to EUT 7
7.3 Receiving antenna mast installation 8
7.4 Location of personnel and radio-noise meter 8
7.5 Services to the radio-noise meter 9

8. Weather-protection enclosure 9

8.1 Construction recommendations 9
8.2 Materials and fasteners 9
8.3 Internal arrangements 10
8.4 Size 10
8.5 Uniformity with time and weather 10
8.6 Other considerations 10

Annex A (informative) Fresnel ellipse 11

Annex B (informative) The Rayleigh criterion 13

Annex C (informative) Bibliography 15

Copyright © 2006 IEEE. All rights reserved.

Copyright The Institute of Electrical and Electronics Engineers, Inc.
Provided by IHS under license with IEEE
No reproduction or networking permitted without license from IHS
Not for Resale

and Electronics Engineers, Inc.
IEEE
nitted without license from IHS
Not for Resale

American National Standard Guide for Construction of Open-Area Test Sites for Performing Radiated Emission Measurements

1. Scope

This guide provides information that is useful in constructing an open-area test site (OATS) used to perform radiated emission measurements in the frequency range of 30 MHz to 1000 MHz. Final validity of the test site can only be made by performing site attenuation measurements described in ANSI C63.4-2003,[1] section 5.4.6.

2. Normative references

The following standards should be consulted when validating an OATS.

ANSI C63.4-2003, American National Standard Methods of Measurement of Radio-Noise Emissions from Low-Voltage Electrical and Electronic Equipment in the Range of 9 kHz to 40 GHz.[2]

ANSI C63.5-2006, American National Standard for Calibration of Antennas Used for Radiated Emission Measurements in Electromagnetic Interference (EMI) Control.

ANSI C63.14-1998, American National Standard Dictionary for Technologies of Electromagnetic Compatibility (EMC), Electromagnetic Pulse (EMP), and Electrostatic Discharge (ESD) (Dictionary of EMC/EMP/ESD Terms and Definitions).

[1] For information on references, see Clause 2.

[2] ANSI C63 publications are available from the Institute of Electrical and Electronics Engineers, 445 Hoes Lane, P.O. Box 1331, Piscataway, NJ 08855-1331, USA (http://standards.ieee.org/), or from the Sales Department, American National Standards Institute, 11 West 42nd Street, New York, NY 10036, USA (http://www.ansi.org/).

Copyright © 2006 IEEE. All rights reserved.

Copyright The Institute of Electrical and Electronics Engineers, Inc.
Provided by IHS under license with IEEE
No reproduction or networking permitted without license from IHS
Not for Resale

3. Definitions

For the purposes of this guide, see ANSI C63.14-1998.

4. General considerations

Section 5.1 through 5.4.5 of ANSI C63.4-2003 list general conditions for test sites and, in particular, OATSs. To summarize, radiated emission tests can be performed in an open, flat area of cleared, level terrain. Alternate sites might include a raised platform; rooftop site; an open area such as a large factory floor, relatively clear of obstructions that could adversely affect the measurements; or an effectively absorber-lined shielded room that is also free of undesired reflections from the walls and ceiling. The preferred test site is an OATS, which is internationally recognized as the standard for making radiated emission measurements (see [B4]).[3]

Such OATSs should be void of buildings, electric lines, fences, trees, etc., and free of underground cables, pipelines, etc., except when using a metallic ground plane that isolates the adverse effects of such underground metallic objects. Services to operate the equipment under test (EUT) and the cabling to the receive antenna should be trenched into the earth if no metallic ground plane is used. The depth of the trench should be such that the cabling will not significantly affect the normalized site attenuation measurement.

Clause 5 through Clause 8 describe key recommended characteristics of the test site, the ground plane, instrumentation and EUT services, and all-weather covers. These recommendations should be used to ensure adequate test sites. Adequacy is determined by performing normalized site attenuation measurements described in ANSI C63.4-2003, section 5.4.6.

5. Obstruction-free area

An obstruction-free area surrounding the EUT and field strength measuring antenna is required. The obstruction-free area should be free from significant scatterers of electromagnetic fields, and should be large enough so that scatterers outside the obstruction-free area will have little effect on the fields measured by the field-strength measuring antenna. The definitive test of the obstruction-free area is to perform normalized site attenuation measurements indicated in ANSI C63.4-2003.

Since the magnitude of the field scattered from an obstruction depends on many factors (size of the obstruction, distance from the EUT and receiving antenna, orientation with respect to the EUT and receiving antenna, conductivity and permittivity of the obstruction, frequency, etc.), it is impossible to specify an obstruction-free area that is necessary and sufficient for all applications. However, a reasonable guide is given in the following paragraphs.

The size and shape of the obstruction-free area are dependent upon the measurement distance and whether or not the EUT will be rotated. If the site is equipped with a turntable, the recommended obstruction-free area is an ellipse with the receiving antenna and EUT at the two foci, and having a major axis equal to twice the measurement distance and a minor axis equal to the product of the measurement distance and the square root of three (see Figure 1). For this ellipse, the path of the undesired ray reflected from any object on the perimeter is twice the length of the direct ray path between the foci.

In the original development of the reflection-free area ellipse, the rationale for using twice the direct path length was that it implies that the scattered signal at the boundary will be at least 6 dB down from the direct signal between the EUT and receiving antenna, and hence have minimal impact on the direct path

[3] The numbers in brackets correspond to those of the bibliography in Annex C.

Copyright © 2006 IEEE. All rights reserved.

Copyright The Institute of Electrical and Electronics Engineers, Inc.
Provided by IHS under license with IEEE
No reproduction or networking permitted without license from IHS
Not for Resale

measurement. Calculations since have shown that a spurious reflected signal 6 dB down from the direct path signal can cause 2 dB to 3 dB errors in the measurements. However, the magnitude of a ground plane edge reflection is dependent upon the path distance and the degree to which the edge is electrically terminated or produces reflections.

For large EUTs, the obstruction-free area must be expanded so that the obstruction clearance distances exist from the perimeter of the EUT. Since the first Fresnel ellipse encloses the area on the ground plane from which the major part of the ground-reflected energy comes, it follows logically that there should be no obstructions in this area. For a 3 m site, the first Fresnel ellipse (see Table 1) is larger than the obstruction-free area ellipse shown in Figure 1. If the site fails to meet the normalized site attenuation criteria in ANSI C63.4-2003, the area that is outside of the construction-free ellipse but enclosed within the first Fresnel ellipse should be investigated for scatterers and obstructions. The effects of poor test-site construction including inadequate obstruction-free area, improper ground-plane construction and sizing, and other site defects are discussed in [B3] and [B10]. If the site is not equipped with a turntable, that is, if the EUT is stationary, the recommended obstruction-free area is a circular area such that the radial distance from the boundary of the EUT to the boundary of the area is equal to the measurement distance multiplied by 1.5 (see Figure 2). In this case, the receiving antenna will be moved about the EUT and a clear area of 1.5 times the measurement separation distance will provide the same prevention of undesired reflections as the boundary shown in Figure 1.

The terrain within the obstruction-free area should be smooth, but does not have to be flat. Small slopes needed for adequate drainage may be acceptable as long as the normalized site attenuation measurement is not significantly affected. (See 6.2 for a discussion of smoothness requirements.)

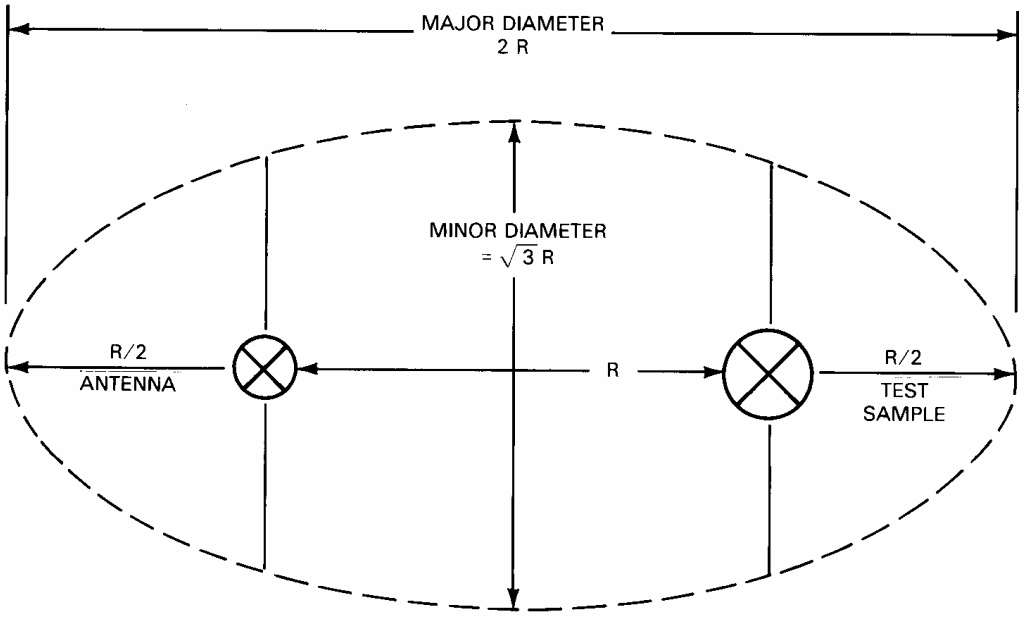

Figure 1—Obstruction-free area for OATS with a turntable

Copyright © 2006 IEEE. All rights reserved.

Copyright The Institute of Electrical and Electronics Engineers, Inc.
Provided by IHS under license with IEEE
No reproduction or networking permitted without license from IHS
Not for Resale

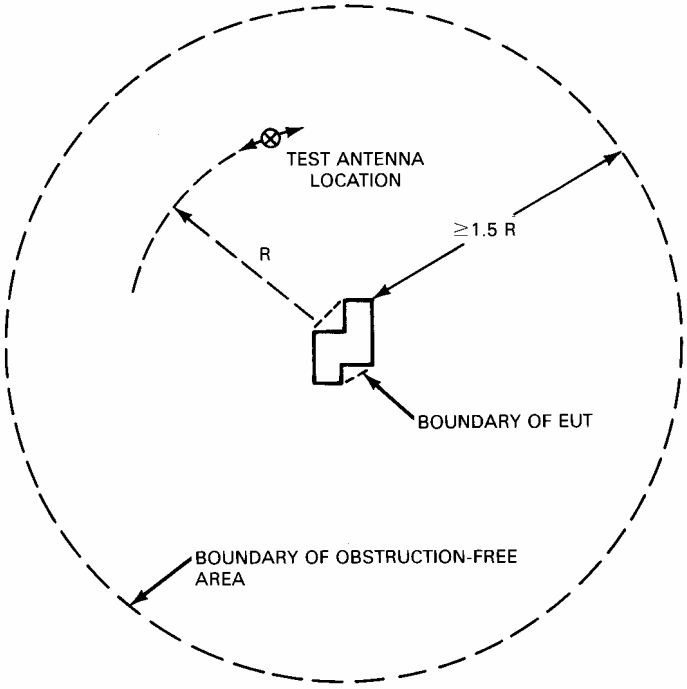

Figure 2—Obstruction-free area for OATS with stationary EUT

Table 1—Dimensions for several representative measurement conditions[4]

Measurement distance (m)	Frequency (MHz)	Antenna heights (m)		Ellipse axes (m)		Ellipse center (m) (see NOTE 2)
				Major	Minor	
R		h_1	h_2	$2X_1$	$2Y_1$	X_0
3 (see NOTE 1)	30	1	4	9.9	9.5	1.4
		2	4	11.3	11.0	1.5
	100	1	4	5.9	5.3	1.2
		2	4	7.6	7.1	1.4
	1000	1	4	4.0	3.4	1.0
		2	4	6.1	5.5	1.3
10	30	1	4	15.3	12.0	4.7
		2	4	16.3	13.0	4.9
	100	1	4	10.8	6.6	4.3
		2	4	12.4	8.1	4.7
	1000	1	4	7.7	3.6	3.4
		2	4	10.6	5.7	4.5
30	30	1	4	34.5	18.3	14.6
		2	4	35.2	18.9	14.8
	100	1	4	29.5	10.1	13.9
		2	4	31.1	11.1	4.5
	1000	1	4	22.5	4.3	11.0
		2	4	28.0	6.1	13.7

NOTE 1—The dimensions of the first Fresnel ellipse calculated for the 3 m measurement distance at 30 MHz are larger than the recommended obstruction-free area ellipse dimensions in Figure A.1. See Clause 5 and 6.1 for further discussion.

NOTE 2—X_0 is the distance from the position of the EUT to the center of the first Fresnel ellipse. (See Figure A.1.)

[4] Notes in text, tables, and figures of a standard are given for information only and do not contain requirements needed to implement this standard.

Copyright © 2006 IEEE. All rights reserved.

Copyright The Institute of Electrical and Electronics Engineers, Inc.
Provided by IHS under license with IEEE
No reproduction or networking permitted without license from IHS
Not for Resale

6. Ground plane

6.1 Size and shape of ground plane

The size and shape of the reflecting surface, or ground plane, are dependent upon the measurement geometry and whether or not the EUT can be rotated (see 6.3 for ground plane material discussion). In general, the reflecting surface is contained wholly within the obstruction-free area. It is prudent, however, to construct the ground plane so that it may be extended in all directions if needed. For a site equipped with a turntable, the theoretically minimum ground plane size and shape is that of the first Fresnel ellipse. See Annex A for a discussion of Fresnel ellipses, the note associated with Figure A.1 for a descriptive picture, and Table 1 for dimensions of several representative ellipses. Practical experience indicates that rectangular ground planes having length and width dimensions substantially less than the Fresnel ellipse dimensions shown in Table 1 may be satisfactory. For example, [B4] shows a 6 m by 9 m ground plane for making 3 m measurements. Table 1 indicates that at 30 MHz the ellipse is 9.9 m by 9.5 m, which for certain areas of the ellipse is larger than the rectangular 6 m by 9 m size (which is generally adequate for measurements). The 6 m by 9 m ground-plane size may not be adequate for vertical polarization, particularly if the ground plane is raised. In this case, it should be expanded to the dimensions in Table 1. The Fresnel ellipse dimensions should, therefore, be used only as a guide, and the adequacy of an actual ground plane should be determined using the site characterization procedure and acceptability criterion given in ANSI C63.4-2003. Since the first Fresnel ellipse encloses the area on the ground plane from which the major part of the ground-reflected energy comes, it may be prudent to have the capability to extend the rectangular or trapezoidal dimensions of the ground plane up to or larger than the dimensions of the Fresnel ellipse. This is especially important for ground planes that are elevated above the surrounding surface.

If the site is not equipped with a turntable and the receiving antenna must be moved around the EUT, a circular ground plane is recommended. The radius of the ground plane derived by rotating the first Fresnel ellipse about the source focal point is given by the following equation:

$$R = X_0 + X_1$$

where

X_0 is the distance from the closest point of the EUT to the center (midway between the two foci) of the first Fresnel ellipse

X_1 is the length of semimajor axis of Fresnel ellipse (see Table 1)

For example, for a 3 m measuring distance, use of the calculated Fresnel ellipse major axis from Table 1 in the above equation (R = 1.4 + 9.9/2 = 6.35 m) results in a ground plane that is larger than the obstruction-free area radius given in Figure 2 at a frequency of 30 MHz; that is, 1.5 m · 3 m = 4.5 m.

6.2 Smoothness of ground plane

In some cases, the Rayleigh roughness criterion described in Annex B provides a useful estimate of maximum allowable rms ground-plane roughness (see Figure B.1).[5] Some examples for representative geometries are given in Table 2. For most practical test sites, especially for 3 m separation applications, up to 4.5 cm (1.8 in) of "valleys" are not significant. Clearly, any site reasonably graded would meet this criterion. The obvious exceptions would be raised ground planes where the edge would probably exceed 4.5 cm. For those cases in particular, site attenuation measurements as described in ANSI C63.4-2003

[5] The rms roughness is a general view of undulations in the ground plane by representing these undulations as shown in Figure B.1.

Copyright © 2006 IEEE. All rights reserved.

Copyright The Institute of Electrical and Electronics Engineers, Inc.
Provided by IHS under license with IEEE
No reproduction or networking permitted without license from IHS
Not for Resale

would have to be made to determine the impact of exceeding the roughness criterion. As can be seen in Table 2, the roughness for the 10 m and 30 m separations is not as restrictive as that for the 3 m site.

6.3 Ground-plane material

As stated in ANSI C63.4-2003, section 5.4.1 and section 5.4.3, a conducting ground plane is required. Metals such as copper, steel, tin, and aluminum or alloys of these metals as long as electrical conductivity is no lower than steel are recommended as the ground-plane material for measurement distances between 3 m and 30 m. Some examples include solid metal sheets, metal foil, perforated metal, expanded metal, wire cloth, wire screen, and metal grating. Metals should be protected to the largest extent practical from weather effects if no protective structure covers the test site, e.g., steel should be galvanized to prevent rust. In any case, periodic normalized site attenuation measurements may be needed to determine any deleterious effects due to the ground plane aging and other effects such as the structure itself being exposed to the weather (if a structure is used). The ground plane should have no voids or gaps with linear dimensions that are greater than 1/10 of a wavelength at the highest frequency of measurement (about 3 cm at 1000 MHz). Material comprised of individual sheets, rolls, or pieces should be soldered or welded at the seams, preferably continuously, but in no case with gaps longer than the 1/10 wavelength criterion. After installation and especially if the above criterion is not adhered to, the adequacy of the ground-plane material and interconnecting mechanism and fastening techniques should be determined by using the site-characterization procedure and acceptability criterion in ANSI C63.4-2003. If the ground plane is exposed to the weather, adequate precautions should be taken to ensure that the material and interconnecting mechanism do not oxidize or corrode to the point that the conductive properties of the entire test area ground plane are degraded. Repeat site-attenuation measurements are clearly needed for all sites (a minimum of every six months is recommended) and more frequently for sites exposed to the weather. In fact, some test laboratories perform representative attenuation measurements at the start of each major test program.

Table 2—Typical values of maximum rms terrain roughness[6]

			Maximum rms roughness, b		
Measurement distance, R (m)	**Source height, h_1 (m)**	**Maximum receiving antenna height, h_2 (m)**	**In wavelengths**	**At 1000 MHz (cm)**	**(in)**
3	1	4	0.15λ	4.5	1.8
10	1	4	0.28λ	8.4	3.3
30	2	4	0.64λ	19.1	7.5

NOTE 1—The rms roughness b is determined from a profile section of the surface. For a random rough surface the rms value is equal to the standard deviation.

NOTE 2—The Rayleigh criterion for a smooth surface is

$$b \le \frac{\lambda}{8}\left[1 + \left(\frac{R}{h_1 + h_2}\right)^2\right]^{-\frac{1}{2}}$$

where

h_1, h_2, and R are shown in Figure B.2

λ is the wavelength in meters

[6] See Annex B.

Copyright © 2006 IEEE. All rights reserved.

Copyright The Institute of Electrical and Electronics Engineers, Inc.
Provided by IHS under license with IEEE
No reproduction or networking permitted without license from IHS
Not for Resale

Use of ground plane materials other than metal may result in failure of the site to meet the ±4 dB acceptability criterion in 5.4.6.1 of ANSI C63.4-2003. Thick (several millimeters or more) dielectric coatings such as sand, asphalt, or wood on top of metal ground planes, not under the EUT (ANSI C63.4-2003; see the Note in 7.1), may also result in unacceptable site-attenuation characteristics in certain frequency ranges, especially for vertical polarization measurements.

6.4 Ground-plane earthing

It is recommended that the ground plane be connected to the surrounding earth (for earth-mounted ground planes) by either a continuous method or periodically spaced ground rods. To avoid corrosion, use the same metal to "earth" as is used for the ground plane itself.

For elevated ground planes, single point grounding should be used. The ground plane, test instrumentation safety ground, and EUT grounds should all be connected to this point via suitable low RF impedance ground connections that are, in turn, connected to the building power supply ground point.

7. Measurement facilities

7.1 Turntables

A remotely controlled turntable is recommended for convenience in measuring radiated emissions from all sides of the EUT. For testing floor-standing EUTs, the turntable should be metal covered and flush with the conducting ground plane. The site attenuation measurement should show whether the gap between the conducting flush turntable surface and the surrounding conducting ground plane should be electrically bridged with suitable rubbing or rolling flexible conductive material. The presence of such an electrical connection can be temporarily simulated by bridging the circumferential gap with conductive tape (fastened with a conductive adhesive) at least every 30° or so (see [B7]). If there is no change in site attenuation, especially below 100 MHz for vertical polarization measurements, the gap need not be filled. If changes are noted that are significant, that is, greater than 0.5 dB, a suitable bridging mechanism as mentioned above should be installed.

NOTE—Some standards require an insulating surface between the ground plane and floor-standing EUT (see ANSI C63.4-2003 requirements for insulating floor standing equipment from the ground plane).

Tabletop EUTs may be tested on a flush turntable or on a nonmetallic turntable above the ground plane.

In the case of a raised turntable, the ground plane should be continuous under the turntable. Material used for such raised turntables and nonmetallic tables of appropriate height should be selected so that there is no adverse effect when performing the site-attenuation measurement. For some applications, such as operation of the EUT via a remote simulator and *I/O* cabling, the turntable should have a center-area hole that will allow the cabling to drop directly down to the ground plane for raised turntables or below the ground plane for flush turntables. If this center area does not rotate with the turntable, power and cooling access and receptacles can also be accommodated and supplied from below the top of the turntable.

7.2 Services to EUT

Electrical service wiring to the EUT should be run under the ground plane to the maximum extent possible and preferably at right angles to the measurement axis. All wires, cables, and plumbing to the turntable or mounting of the EUT should also preferably be run under the ground plane. When not possible, service to the EUT should be placed in a shielded conduit on top of, and bonded to, the ground plane, with as low a profile as possible. These should be in place during site attenuation measurements. If radiation from these

Copyright © 2006 IEEE. All rights reserved.

Copyright The Institute of Electrical and Electronics Engineers, Inc.
Provided by IHS under license with IEEE
No reproduction or networking permitted without license from IHS
Not for Resale

services on top of the ground plane may occur, they should be run through a shielded conduit so as not to affect the site attenuation.

7.3 Receiving antenna mast installation

The receiving antenna should be mounted on a nonconducting support or positioner that will allow the antenna to be raised between 1 m and 4 m. The cable shall be connected to the antenna balun such that the cable is orthogonal to the axis of the antenna elements at all antenna heights in order to maintain balance with respect to ground. The cabling from the receiving antenna balun should drop vertically to the ground plane approximately 1 m or more to the rear of the receiving antenna. An antenna boom approximately 1 m in length will suffice. From that point the cable shield should be bonded to the ground plane or, preferably, attached via an RF feed-through connector (attached to the ground plane) to below the ground plane. Cables that lie on the ground randomly or come closer than 1 m to any portion of the receive antenna elements should be avoided unless it is shown that the effects on site attenuation are negligible. Take-up reels and the like could be used, providing that the effects (both short term and long term) of cable flexing and rotating connectors are investigated and checked periodically via the site-attenuation measurement or other suitable RF impedance checks. Preferably, the take-up reel should be directly under the vertical drop of the cable. The cable between the antenna and radio-noise meter should be as short as practical to ensure acceptable received signal levels at high frequencies.

For both cases, the antenna factor calibration should not be affected by the presence of the antenna positioners and disposition of the coaxial cabling attached to the antenna. To ensure that the antenna positioner and cable layout do not adversely affect emission measurements, both need to be included during NSA measurements and the NSA acceptance criteria met as indicated in ANSI C63.4-2003. ANSI C63.5-1988 provides techniques for proper measurement of antenna factors.

To reduce adverse effects from RF currents induced by the EUT or calibrating source antenna on the exterior of the coaxial antenna cables, particularly with vertically polarized measurements, it is recommended that the portion of the cables above the ground plane be strung with lossy ferrite beads at intervals of approximately 150 mm (6 in), or that the outer jacket be heavily impregnated with lossy ferrite material (see [B5] and [B6]).

7.4 Location of personnel and radio-noise meter

The location of test instrumentation and personnel should be chosen to minimize scattering from these objects during measurements. If any doubt exists, a normalized site-attenuation measurement can be performed to verify the acceptability of instrumentation and personnel positioning. Some standards require test personnel to access the EUT during testing for such purposes as I/O cable movement. If this is done, the full effect of introducing the person as a scatterer should be investigated, since the mere presence of the person can enhance or suppress emissions compared to those found when the person is not present. In any case, the final measurement should be made with test personnel and measuring instrumentation clear of the test area, or test documentation should describe the method used to correct the test results for the effect of the tester's body.

An underground instrumentation room located beneath the metal ground plane will eliminate scattering from instrumentation and personnel and has other advantages in servicing the EUT. A location perpendicular to the test axis and outside the obstruction-free area indicated in Clause 5 is also appropriate for test personnel and measurement instrumentation. If an underground (or under-the-ground plane) instrumentation room is used, a great deal of attention should be paid to bonding of the EUT, EUT cable shields (if used), antenna cable shield, and filtering of the power to the EUT at the ground plane. The reference and physical connection for these bonds should be to a single point connection to the ground plane. If the ground plane does not form the true ground reference for all the equipment involved in the test and is not an effective barrier isolating the test setup from the emissions possibly emanating from the room below, the test results may be affected adversely.

Copyright © 2006 IEEE. All rights reserved.

Copyright The Institute of Electrical and Electronics Engineers, Inc.
Provided by IHS under license with IEEE
No reproduction or networking permitted without license from IHS
Not for Resale

7.5 Services to the radio-noise meter

Electric service to the radio-noise meter (or spectrum analyzers meeting the requirements of 4.1.1.2 of ANSI C63.4-2003) should preferably be derived from a different power distribution panel or, alternately, a filtered panel other than that used to supply the EUT, in order to provide as much RF isolation as possible. Electric service lines for the radio-noise meter should preferably be run underground and should be separated from the EUT and EUT service lines to the maximum extent possible. When not possible, service should be kept flush with, and bonded to, the ground plane and installed so as not to move during testing. Proper isolation between the EUT and instrumentation power sources is obtained when an RF power-line filter is inserted in the path between the ac outlet for the EUT power and the ac outlet for the instrumentation.

8. Weather-protection enclosure

8.1 Construction recommendations

Weather protection is desirable if the test facility is to be used throughout the year, during extremes of weather, and to protect the metallic ground plane, EUT, and receiving antennas from corrosion and deterioration.

The following three types of structures are in common use:

a) *Type 1.* A structure that encloses the measurement range, that is, both the EUT, the receiving antenna, and the space in between.

b) *Type 2.* A structure that encloses only the EUT (the receiving antenna and most of the intervening space between the EUT and antenna are outside).

c) *Type 3.* A structure that is outside the obstruction-free area (that is, encloses neither the EUT nor the receiving antenna). This type of structure is used, for example, to house instrumentation and test personnel only.

Weather-protection materials must be RF transparent so as not to cause undesirable reflections and attenuations of the EUT fields at the highest measurement frequency. The structure should preferably be shaped to allow easy or self-removal of snow, ice, or water. RF transparency of these materials should be measured. If there is a significant (> 0.5 dB) increase in site attenuation with the material placed between the transmit and receive antenna, such material or construction practice should not be used. Such example measurements are cited in [B11].

The most critical structure from an RF transparency viewpoint is Type 2, since the propagation path from the EUT to the receiving antenna passes through the structure and periodic cleaning of the structure may be advisable. The next most critical structure is Type 1, since reflections and scattering from materials can disturb the fields inside the structure. The least critical is Type 3, which is more amenable to use of conventional materials and construction techniques, such as wood and common nails. It is prudent to consider making site-attenuation measurements in accordance with 5.4.6 of ANSI C63.4-2003 if the weather-enclosure material is considered to be affecting emission measurements.

8.2 Materials and fasteners

Up to 1000 MHz, thin sections of fiberglass, most other plastics, specially sealed woods, and fabric material will not cause appreciable attenuation. Moisture absorption in some materials (for example, wood and nylon) can cause transmission losses that are particularly critical if EUT emissions are measured through such material as in a Type 2 structure. Care should be taken to ensure that air-deposited conductive

Copyright © 2006 IEEE. All rights reserved.

Copyright The Institute of Electrical and Electronics Engineers, Inc.
Provided by IHS under license with IEEE
No reproduction or networking permitted without license from IHS
Not for Resale

particles, standing water, and ice do not build up on the structure or within the material forming the structure.

Use of metal above the ground plane should be kept to a minimum. Use of plastic or fabric fasteners is recommended for Type 1 and Type 2 structures. Any anchors, pilings, or similar foundations should be at or below ground-plane elevation or be far enough removed so as not to affect the measurement. Modern RF transparent building practices and materials such as those cited in [B8] and [B9] are available and do not contain any metal above the ground-plane elevation.

The RF attenuation and scattering properties of materials and fasteners should be measured or evaluated before commitment to the final design. It is shown that scattering from 2 in by 4 in wood studs can cause nonnegligible attenuation through walls using this type of construction. Again, site-attenuation measurements described in ANSI C63.4-2003 provide the definitive mechanism for determining the suitability of such building practices. Measurements with a sample construction section are prudent and are strongly recommended.

8.3 Internal arrangements

All structural members should be nonreflective. Any blowers or ducts for heating, cooling, or air support should be outside the test area, outside the structure, or beyond the obstruction-free area, unless they are made of nonconductive material or run below the ground plane. Temperature and humidity control may be required for the operation of the equipment and for control of electrostatic discharge effects. Thermostats or humidistats and their control wires should be located in underground return plenums so as not to cause control wiring reflections. Insulation or windows should be free of metal backing or framing. Safety rails or stairs should also be nonconductive if located above the ground plane.

8.4 Size

The size of a weather-protection enclosure will depend on the size of the EUT and whether or not the antenna range is to be enclosed. If the antenna position is enclosed, the enclosure height should be high enough to accommodate the highest elevation of the receive antenna upper element during vertical polarization measurements.

8.5 Uniformity with time and weather

It is recommended that periodic site-attenuation measurements be made in accordance with 5.4.6.5 of ANSI C63.4-2003 in order to detect anomalies due to degradation of all-weather protection caused by weather conditions (for example, moisture absorption) or contamination of enclosure materials. A six-month interval is generally adequate unless physical signs indicate material degradation sooner; that is, the material changes color due to airborne contaminants.

8.6 Other considerations

The walls of a weather-protection enclosure should not be located at the ground-plane edges. For economy of design, a structure may be smaller than the ground plane, provided care is taken to avoid discontinuities as the ground plane passes under the building walls. Experience has shown that the axis of measurements should be nonparallel with the building axis. This will usually reduce the reflective effects of the building, if any.

Copyright © 2006 IEEE. All rights reserved.

Copyright The Institute of Electrical and Electronics Engineers, Inc.
Provided by IHS under license with IEEE
No reproduction or networking permitted without license from IHS
Not for Resale

Annex A

(informative)

Fresnel ellipse

This annex contains a derivation of the Fresnel zones. The Fresnel zones give one an indication of the shape and location of the regions on a reflecting plane that contribute the most to the total field received at a given point. The derivation follows from [B2].

Assume a smooth *xy* plane (Figure A.1). A source at the point A (0, 0, h_1) induces surface currents on the *xy* plane that radiate a reflected field. The reflected field, as well as the direct field, is received at the point B (R, 0, h_2).

The ray through the geometrical point of reflection (illustrated with dashed lines) has a longer path length than the direct ray path. This increase of path length δ is given by Equation (A.1):

$$\delta = R_1 + R_2 - d \tag{A.1}$$

For a given measurement geometry, δ and d are constant and Equation (A.1) may be rewritten as follows:

$$R_1 + R_2 = \delta + d = \text{Constant} \tag{A.2}$$

In three dimensions, Equation (A.2) is the equation of an ellipsoid of revolution about the axis connecting foci A and B and touching the *xy* plane only at the geometrical reflection point. This ellipsoid defines the locus of all possible reflection points that would produce a reflected ray exactly δ longer than the direct ray d. If δ is increased by λ/2, a new ellipsoid is formed that describes the locus of all possible reflection points that would produce a reflected ray with a path length λ/2 longer than a ray through the geometrical point of reflection. A series of such ellipsoids may be formed by replacing δ in Equation (A.1) by δn, where

$$\delta_n = \delta + \frac{n\lambda}{2},\ n = 0, 1, 2, 3, \ldots \tag{A.3}$$

The intersection of these ellipsoids and the *xy* plane yields the family of ellipses shown in Figure A.1. For the case where n = 0, the intersection of the ellipsoids is the geometrical point of reflection. The average phase of the radiation from each zone bounded by two neighboring ellipses will differ from the adjacent zone by π so that the elementary secondary waves radiated by successive zones will be in phase opposition.

For the purposes of this annex, the ellipses may be expressed in terms of R, h_1, h_2, and δ. The center of the ellipse (X_0, 0, 0) is given as follows in Equation (A.4):

$$X_0 = \frac{R}{2}\left[1 - \frac{\tan^2\theta}{\left(\frac{\delta_n}{R} + \sec\theta\right)^2 - 1}\right] \tag{A.4}$$

Copyright © 2006 IEEE. All rights reserved.

Copyright The Institute of Electrical and Electronics Engineers, Inc.
Provided by IHS under license with IEEE
No reproduction or networking permitted without license from IHS
Not for Resale

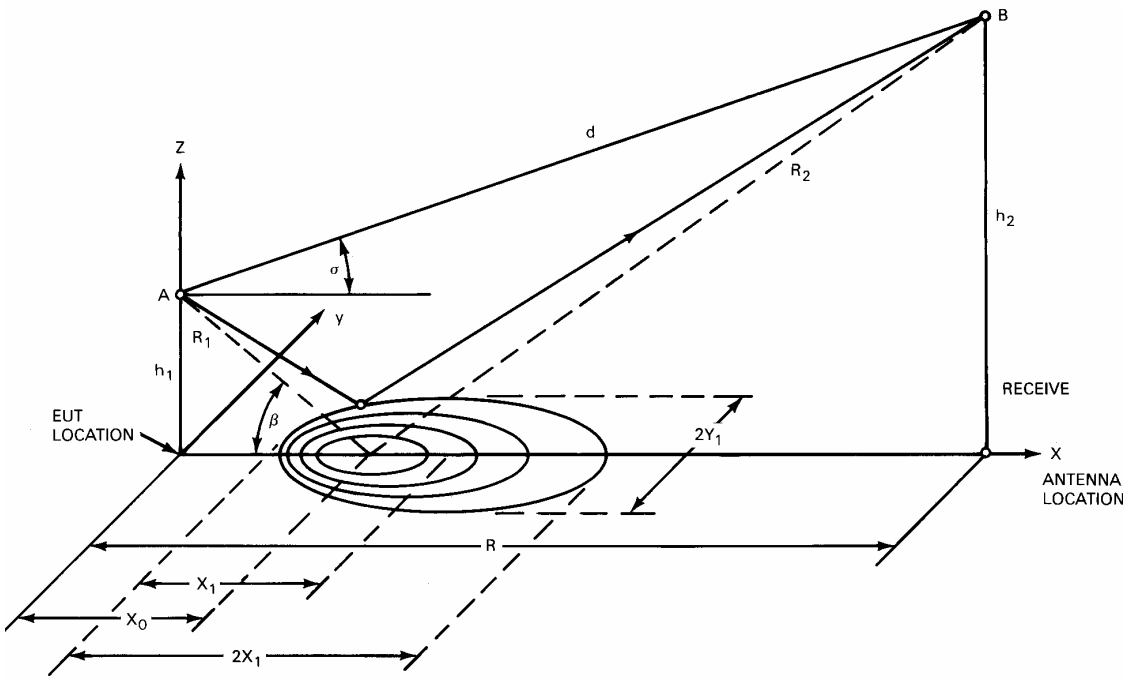

NOTE—For simplicity, the EUT location is considered at the center of the turntable for this figure. For actual application, R and X_0 are measured from the closest point of the EUT to the receive antenna. Hence, the largest linear dimension projected onto the ground plane should be considered when applying the Fresnel ellipse equation.

Figure A.1—The Fresnel ellipses on a reflecting surface

where θ is the angle formed between line *d* and a line through point A parallel with the *X* axis (see Figure A.1). The semiminor axis is given in Equation (A.5) as follows:

$$Y_1 = \frac{R}{2}\left\{\left[\left(\frac{\delta_n}{R}\right)^2 + \frac{2\delta_n}{R}\sec\theta\right]\left[1 - \frac{\tan^2\theta}{\left(\frac{\delta_n}{R} + \sec\theta\right)^2 - 1}\right]\right\}^{\frac{1}{2}} \tag{A.5}$$

The semimajor axis is given in Equation (A.6) as follows:

$$X_1 = Y_1\left\{1 + \frac{1}{\left(\frac{\delta_n}{R} + \sec\theta\right)^2 - 1}\right\}^{\frac{1}{2}} \tag{A.6}$$

Copyright © 2006 IEEE. All rights reserved.
Copyright The Institute of Electrical and Electronics Engineers, Inc.
Provided by IHS under license with IEEE
No reproduction or networking permitted without license from IHS
Not for Resale

Annex B

(informative)

The Rayleigh criterion

Rayleigh has suggested a way of formulating the criterion for a specularly smooth surface. Figure B.1 depicts the derivation. If two rays are incident on a surface with roughness of height b at a grazing angle of β, the path difference between the two rays is given in Equation (B.1) as follows:

$$\Delta d = 2b\sin\beta \tag{B.1}$$

Hence the phase difference is given in Equation (B.2) as follows:

$$\Delta\phi = \frac{2\pi}{\lambda}\cdot\Delta d = \frac{4\pi b}{\lambda}\sin\beta \tag{B.2}$$

If the phase difference is small, the two rays will be nearly in phase as they are when reflected from a perfectly smooth surface. As the phase difference increases, the two rays will interfere until they cancel when

$$\Delta\varnothing = \pi$$

If this happens, no energy is transferred in this direction so it must be scattered in other directions. Then, the surface must be considered rough at

$$\Delta\varnothing = \pi$$

and smooth at

$$\Delta\varnothing = 0$$

Rayleigh chose the value halfway between the two, or

$$\Delta\varnothing = \pi/2$$

as the distinguishing criterion. (Other values, for example π/4, have been called more realistic [B2].) Using the Rayleigh criterion, a surface is “smooth” if

$$b < \frac{\lambda}{8\sin\beta} \tag{B.3}$$

For measurement distance R and source and receive antenna heights h_1 and h_2 (see Figure B.2), we have Equation (B.4) as follows:

Copyright © 2006 IEEE. All rights reserved.

Copyright The Institute of Electrical and Electronics Engineers, Inc.
Provided by IHS under license with IEEE
No reproduction or networking permitted without license from IHS
Not for Resale

$$\sin\beta = \frac{h_1 + h_2}{[R^2 + (h_1 + h_2)^2]^{\frac{1}{2}}} \tag{B.4}$$

and Equation (B.3) can be rewritten as follows in Equation (B.5):

$$b < \lambda\left[\frac{R^2 + (h_1 + h_2)^2}{8(h_1 + h_2)}\right]^{\frac{1}{2}} \tag{B.5}$$

or as follows in Equation (B.6):

$$b < \frac{\lambda}{8}\left[1 + \left(\frac{R}{h_1 + h_2}\right)^2\right]^{\frac{1}{2}} \tag{B.6}$$

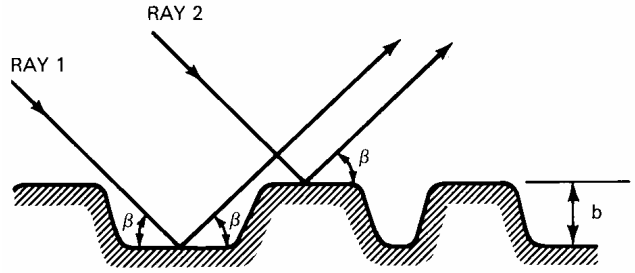

Figure B.1—The Rayleigh criterion

The right-hand side of the inequality [Equation (B.5) or Equation (B.6)] is a minimum (that is, most stringent condition) when the receiving antenna is at the maximum height h_2^{max} in the scan range $h_2^{min} \_ h_2 \_ h_2^{max}$

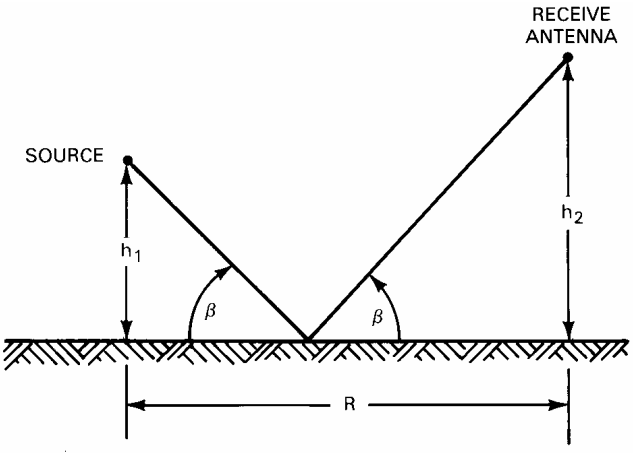

Figure B.2—Reflection geometry

Copyright © 2006 IEEE. All rights reserved.

Copyright The Institute of Electrical and Electronics Engineers, Inc.
Provided by IHS under license with IEEE
No reproduction or networking permitted without license from IHS
Not for Resale

Annex C

(informative)

Bibliography

[B1] ANSI C63.6, American National Standard for Open Area Test Site Measurements—Guide for Computation of Errors.

[B2] Beckmann, P. and Spizzichino, A., *The Scattering of Electromagnetic Waves from Rough Surfaces*. New York: Pergamon Press Book, MacMillan Co., 1963.

[B3] Bronaugh, E. L., "Comparison of four open area test sites," *Seventh International Zurich Symposium and Technical Exhibition on Electromagnetic Compatibility*, Mar. 3–5, 1987.

[B4] CISPR Publication 16, CISPR Specification for Radio Interference Measuring Apparatus and Measurement Methods.

[B5] DeMarinis, J., "The antenna cable as a source of error in EMI measurements," *IEEE International Symposium in Electromagnetic Compatibility*, pp. 9–14, 1988.

[B6] DeMarinis, J., "Getting better results from an open area test site," *Eighth International Zurich Symposium and Technical Exhibition on Electromagnetic Compatibility*, pp. 329–332, Mar. 7–9, 1989.

[B7] Friesen, D., "Effect of flush mounted turntables on site attenuation," *IEEE EMC Symposium*, pp. 163–165, 1989.

[B8] Heirman, D. N., "A basic all-weather open field EMI test facility," *IEEE ELECTRO*, New York, NY, Session 8, Apr. 1983.

[B9] Heirman, D. N., "Construction considerations in building a permanent all-weather open area test site," *IEEE EMC Symposium Record*, Cat. No. 85CH2116-2, 1985.

[B10] Heirman, D. N., "Investigating open area test site measurements," *Seventh International Zurich Symposium and Technical Exhibition on Electromagnetic Compatibility*, Mar. 3–5, 1987.

[B11] Smith, A. A., Jr., "Control of errors on open area test sites," *EMC Technology*, Oct. 1982.

Copyright © 2006 IEEE. All rights reserved.

Copyright The Institute of Electrical and Electronics Engineers, Inc.
Provided by IHS under license with IEEE
No reproduction or networking permitted without license from IHS
Not for Resale