IEEE Guide for the Application of Component Surge-Protective Devices for Use in Low-Voltage [Equal to or Less than 1000 V (ac) or 1200 V (dc)] Circuits

C62.42™

IEEE Power Engineering Society

Sponsored by the
Surge Protective Devices Committee

IEEE
3 Park Avenue
New York, NY 10016-5997, USA

31 May 2006

IEEE Std C62.42™-2005
(Revision of IEEE C62.42-1992)

Copyright The Institute of Electrical and Electronics Engineers, Inc.
Provided by IHS under license with IEEE
No reproduction or networking permitted without license from IHS

Not for Resale

and Electronics Engineers, Inc.
IEEE
itted without license from IHS
Not for Resale

Recognized as an
American National Standard (ANSI)

IEEE Std C62.42™-2005
(Revision of
IEEE Std C62.42-1992)

IEEE Guide for the Application of Component Surge-Protective Devices for Use in Low-Voltage [Equal to or Less than 1000 V (ac) or 1200 V (dc)] Circuits

Sponsor
Surge Protective Devices Committee
of the
IEEE Power Engineering Society

Approved 4 May 2006

American National Standards Institute

Approved 7 December 2005

IEEE-SA Standards Board

Copyright The Institute of Electrical and Electronics Engineers, Inc.
Provided by IHS under license with IEEE
No reproduction or networking permitted without license from IHS

Not for Resale

The working group thanks Littelfuse, Inc. for permission to reproduce Figure 11, Figure 12, Figure 13, Figure 14, Figure 15, Figure 16, Figure 18, Figure 20, Figure 22, Figure 23, Figure C.1, Figure C.4, Figure C.5, Figure C.6, Figure C.7, Figure C.9, and Figure C.10. All such extracts are copyright of Littlefuse, Inc., Des Plaines, IL, USA. All rights reserved. Further information on Littlefuse is available from www.littelfuse.com Littelfuse has no responsibility for the placement and context in which the extracts and contents are reproduced by the author, nor is Littelfuse in any way responsible for the other content or accuracy therein.

Abstract: Assistance in selecting the most appropriate type of low-voltage component surge-protective device (gas tube, air gap, metal-oxide varistor, or avalanche junction semiconductor) for a particular application is provided. Evaluation of the characteristics of each device to meet specific service requirements is also given.
Keywords: air gap surge arrester, avalanche junction semiconductor, breakdown voltage, communication circuits, gas tube surge arrester, metal-oxide varistor, power circuits, SPD, surge, surge-protective device, surge protector

---

The Institute of Electrical and Electronics Engineers, Inc.
3 Park Avenue, New York, NY 10016-5997, USA

Copyright © 2006 by the Institute of Electrical and Electronics Engineers, Inc.
All rights reserved. Published 31 May 2006. Printed in the United States of America.

IEEE is a registered trademark in the U.S. Patent & Trademark Office, owned by the Institute of Electrical and Electronics Engineers, Incorporated.

National Electrical Code and NEC are both registered trademarks in the U.S. Patent & Trademark Office, owned by the National Fire Protection Association, Inc.

Print: ISBN 0-7381-4886-5 SH95513
PDF: ISBN 0-7381-4887-3 SS95513

No part of this publication may be reproduced in any form, in an electronic retrieval system or otherwise, without the prior written permission of the publisher.

Copyright © 2006 IEEE. All rights reserved.

Copyright The Institute of Electrical and Electronics Engineers, Inc.
Provided by IHS under license with IEEE
No reproduction or networking permitted without license from IHS Not for Resale

IEEE Standards documents are developed within the IEEE Societies and the Standards Coordinating Committees of the IEEE Standards Association (IEEE-SA) Standards Board. The IEEE develops its standards through a consensus development process, approved by the American National Standards Institute, which brings together volunteers representing varied viewpoints and interests to achieve the final product. Volunteers are not necessarily members of the Institute and serve without compensation. While the IEEE administers the process and establishes rules to promote fairness in the consensus development process, the IEEE does not independently evaluate, test, or verify the accuracy of any of the information contained in its standards.

Use of an IEEE Standard is wholly voluntary. The IEEE disclaims liability for any personal injury, property or other damage, of any nature whatsoever, whether special, indirect, consequential, or compensatory, directly or indirectly resulting from the publication, use of, or reliance upon this, or any other IEEE Standard document.
The IEEE does not warrant or represent the accuracy or content of the material contained herein, and expressly disclaims any express or implied warranty, including any implied warranty of merchantability or fitness for a specific purpose, or that the use of the material contained herein is free from patent infringement. IEEE Standards documents are supplied "**AS IS**."

The existence of an IEEE Standard does not imply that there are no other ways to produce, test, measure, purchase, market, or provide other goods and services related to the scope of the IEEE Standard. Furthermore, the viewpoint expressed at the time a standard is approved and issued is subject to change brought about through developments in the state of the art and comments received from users of the standard. Every IEEE Standard is subjected to review at least every five years for revision or reaffirmation. When a document is more than five years old and has not been reaffirmed, it is reasonable to conclude that its contents, although still of some value, do not wholly reflect the present state of the art. Users are cautioned to check to determine that they have the latest edition of any IEEE Standard.

In publishing and making this document available, the IEEE is not suggesting or rendering professional or other services for, or on behalf of, any person or entity. Nor is the IEEE undertaking to perform any duty owed by any other person or entity to another. Any person utilizing this, and any other IEEE Standards document, should rely upon the advice of a competent professional in determining the exercise of reasonable care in any given circumstances.

Interpretations: Occasionally questions may arise regarding the meaning of portions of standards as they relate to specific applications. When the need for interpretations is brought to the attention of IEEE, the Institute will initiate action to prepare appropriate responses. Since IEEE Standards represent a consensus of concerned interests, it is important to ensure that any interpretation has also received the concurrence of a balance of interests. For this reason, IEEE and the members of its societies and Standards Coordinating Committees are not able to provide an instant response to interpretation requests except in those cases where the matter has previously received formal consideration. At lectures, symposia, seminars, or educational courses, an individual presenting information on IEEE standards shall make it clear that his or her views should be considered the personal views of that individual rather than the formal position, explanation, or interpretation of the IEEE.

Comments for revision of IEEE Standards are welcome from any interested party, regardless of membership affiliation with IEEE. Suggestions for changes in documents should be in the form of a proposed change of text, together with appropriate supporting comments. Comments on standards and requests for interpretations should be addressed to:

Secretary, IEEE-SA Standards Board
445 Hoes Lane
Piscataway, NJ 08854
USA

NOTE—Attention is called to the possibility that implementation of this standard may require use of subject matter covered by patent rights. By publication of this standard, no position is taken with respect to the existence or validity of any patent rights in connection therewith. The IEEE shall not be responsible for identifying patents for which a license may be required by an IEEE standard or for conducting inquiries into the legal validity or scope of those patents that are brought to its attention.

Authorization to photocopy portions of any individual standard for internal or personal use is granted by the Institute of Electrical and Electronics Engineers, Inc., provided that the appropriate fee is paid to Copyright Clearance Center. To arrange for payment of licensing fee, please contact Copyright Clearance Center, Customer Service, 222 Rosewood Drive, Danvers, MA 01923 USA; +1 978 750 8400. Permission to photocopy portions of any individual standard for educational classroom use can also be obtained through the Copyright Clearance Center.

Copyright © 2006 IEEE. All rights reserved.

Copyright The Institute of Electrical and Electronics Engineers, Inc.
Provided by IHS under license with IEEE
No reproduction or networking permitted without license from IHS
Not for Resale

Introduction

This introduction is not part of IEEE Std C62.42-2005, IEEE Guide for the Application of Component Surge-Protective Devices for Use in Low-Voltage [Equal to or Less than 1000 V (ac) or 1200 V (dc)] Circuits.

This guide is a revision of IEEE Std C62.42-1992 and has been rewritten to include metal oxide varistor (MOV) and avalanche junction semiconductor component surge-protective devices in addition to gas tube and air gap arresters, which were the subjects of the previous document.

This guide supplements IEEE Std C62.31™-1987[a,b], IEEE Std C62.32™-1981, IEEE Std C62.33™-1982, and IEEE Std C62.35™-1987. The purpose of this guide is to assist in selecting the most appropriate type of device for a particular application, and in evaluating the characteristics of devices to meet specific service requirements.

IEEE Std C62.42-2005 includes an explanation of the electrical environment in which component surge-protective devices shall operate, a comparison of the major difference among the four types of devices considered. It also includes a description and the theory of operation of gas tube, air gap, MOV and avalanche junction semiconductor devices, as well as guidance in applying and interpreting the respective test specifications for the arrester characteristics.

Notice to users

Errata

Errata, if any, for this and all other standards can be accessed at the following URL: http://standards.ieee.org/reading/ieee/updates/errata/index.html. Users are encouraged to check this URL for errata periodically.

Interpretations

Current interpretations can be accessed at the following URL: http://standards.ieee.org/reading/ieee/interp/index.html.

Patents

Attention is called to the possibility that implementation of this guide may require use of subject matter covered by patent rights. By publication of this guide, no position is taken with respect to the existence or validity of any patent rights in connection therewith. The IEEE shall not be responsible for identifying patents or patent applications for which a license may be required to implement an IEEE standard or for conducting inquiries into the legal validity or scope of those patents that are brought to its attention.

[a] The IEEE standards or products referred to in this introduction are trademarks of the Institute of Electrical and Electronics Engineers, Inc.

[b] IEEE publications are available from the Institute of Electrical and Electronics Engineers, Inc., 445 Hoes Lane, P.O. Box 1331, Piscataway, NJ 08855-1331, USA (http://standards.ieee.org/).

Copyright © 2006 IEEE. All rights reserved.

Copyright The Institute of Electrical and Electronics Engineers, Inc.
Provided by IHS under license with IEEE
No reproduction or networking permitted without license from IHS
Not for Resale

Participants

At the time this guide was completed, the 3.6.3 Working Group had the following membership:

Donald Turner, *Chair*
Ken Brown, *Secretary*

William Bush
Chrysanthos Chrysanthou
Tom Conrad
Ted Dhooge
Ernie Gallo
William Goldbach
Randy Goodrich
Jim Harrison
Tom Hartman
Ronald Hotchkiss
Phillip Havens
Wilhelm H. Kapp
Joseph L. Koepfinger
Benny Lee
François D. Martzloff
Michael Maytum
Pat McCurdy
Richard Odenberg
Hans-Wolfgang Oertel
Bill Travis

The following members of the individual balloting committee voted on this guide. Balloters may have voted for approval, disapproval, or abstention.

Mark Bushnell
James Case
Chrysanthos Chrysanthou
Bryan Cole
Tommy Cooper
Jerry Corkran
R. Daubert
Charles Drexler
Gary Engmann
Clifford Erven
James Funke
Ernie Gallo
William Goldbach
Randall Groves
Ken Hanus
Steven Hensley
Raymond Hill
Ronald Hotchkiss
Jose Jarque
Yuri Khersonsky
Joseph Koepfinger
Saumen Kundu
Benny Lee
Antonio Lim
Jason Lin
Paul Lindemulder
Carl Lindquist
Al Maguire
Ahmad MahinFallah
William Majeski
Albert Martin
Michael Maytum
Mark McGranaghan
Nigel McQuin
Bryan Melville
G. Michel
Rick O'Keefe
Hans-Wolfgang Oertel
Joseph Osterhout
Gary Peele
Paul Pillitteri
Johannes Rickmann
Michael Roberts
Thomas Rozek
Koenraad Rutgers
Steven Sano
John Stein
Donald Turner
Daniel Ward
James Wilson

When the IEEE-SA Standards Board approved this guide on 7 December 2005, it had the following membership:

Steve M. Mills, *Chair*
Richard H. Hulett, *Vice Chair*
Don Wright, *Past Chair*
Judith Gorman, *Secretary*

Mark D. Bowman
Dennis B. Brophy
Joseph Bruder
Richard Cox
Bob Davis
Julian Forster*
Joanna N. Guenin
Mark S. Halpin
Raymond Hapeman
William B. Hopf
Lowell G. Johnson
Herman Koch
Joseph L. Koepfinger*
David J. Law
Daleep C. Mohla
Paul Nikolich
T. W. Olsen
Glenn Parsons
Ronald C. Petersen
Gary S. Robinson
Frank Stone
Malcolm V. Thaden
Richard L. Townsend
Joe D. Watson
Howard L. Wolfman

*Member Emeritus

Copyright © 2006 IEEE. All rights reserved.

Copyright The Institute of Electrical and Electronics Engineers, Inc.
Provided by IHS under license with IEEE
No reproduction or networking permitted without license from IHS
Not for Resale

Also included are the following nonvoting IEEE-SA Standards Board liaisons:

Satish K. Aggarwal, *NRC Representative*
Richard DeBlasio, DOE Representative
Alan H. Cookson, NIST Representative

Jennie Steinhagen
IEEE Standards Project Editor

--`,,```,,,,````-`-`,,Copyright © 2006 IEEE. All rights reserved.

Copyright The Institute of Electrical and Electronics Engineers, Inc.
Provided by IHS under license with IEEE
No reproduction or networking permitted without license from IHS

Not for Resale

Contents

1. Overview 1

1.1 Scope 2

2. Normative references 2

2.1 IEEE standard test specifications for component surge-protective devices 2
2.2 IEEE standard test specifications for multiple component surge-protective devices 2
2.3 General references 3

3. Definitions 4

4. Electrical environment 4

4.1 Lightning and its effects 4
4.2 Low-energy static source 8
4.3 Power interference 8
4.4 Switching transients 10
4.5 Electrostatic discharge 10
4.6 Electromagnetic pulse 12

5. Comparison and selection of component surge-protective devices 12

5.1 Comparison between voltage switching and voltage limiting component SPDs 12

6. Gas tubes 15

6.1 Description 15
6.2 Theory of operation 16
6.3 Gas tube arrester test characteristics 19
6.4 Application of gas tube surge arresters (telecommunications) 23

7. Air gaps 28

7.1 Description 28
7.2 Theory of operation 29
7.3 Air gap arrester test characteristics 29
7.4 Application of air gap surge arresters 32
7.5 Backup air gap surge arresters 35

8. Component MOV surge-protective devices 36

8.1 Description 36
8.2 Theory of operation 37
8.3 Varistor test characteristics 38
8.4 Application of varistor surge-protective device components 50

Copyright © 2006 IEEE. All rights reserved.

Copyright The Institute of Electrical and Electronics Engineers, Inc.
Provided by IHS under license with IEEE
No reproduction or networking permitted without license from IHS
Not for Resale

9. Component avalanche junction semiconductor surge-protective devices 58

9.1 Description 59
9.2 Theory of Operation 59
9.3 Avalanche diode test characteristics 61
9.4 Application of avalanche diodes 68

Annex A (informative) Circuit behavior of gas tube arresters 69

Annex B (informative) Circuit behavior of air gap arresters 74

Annex C (informative) Examples of applications of MOVs 78

Annex D (informative) Generic examples of surge problems that are solved by the application of avalanche junction semiconductor SPDs 93

Annex E (informative) Bibliography 97

Copyright © 2006 IEEE. All rights reserved.

Copyright The Institute of Electrical and Electronics Engineers, Inc.
Provided by IHS under license with IEEE
No reproduction or networking permitted without license from IHS
Not for Resale

IEEE Guide for the Application of Component Surge-Protective Devices for Use in Low-Voltage [Equal to or Less than 1000 V (ac) or 1200 V (dc)] Circuits

1. Overview

This guide is intended to provide assistance in selecting the most appropriate type of component surge-protective device, or combination of devices, for use in a surge protector, equipment, or system application. The following are examples of those who can benefit from this guide:

a) One who designs low-voltage surge protectors and desires an overview of the application of component surge-protective devices, or combination of component surge-protective devices used within surge protectors.

b) One who designs low-voltage power, data, communications, or signaling products or systems and desires guidance on selecting appropriate component surge-protective devices to be used directly within the product or system as part of the initial product/system design (i.e., protection designed as an integral part of the product or system).

c) One who needs to solve a surge protection problem in the field and seeks guidance on selecting and installing appropriate component surge-protective devices to solve the problem (e.g., consultants or field service personnel who need to provide ad hoc surge protection for a product or system in order to resolve a problem).

d) One who desires to ensure appropriate surge protection of a system in the early stages of design and needs to gain an overall appreciation of the technology.

This guide is divided into nine clauses. Clause 1 provides an overview and scope for this guide. Clause 2 lists references. Clause 3 lists definitions. Clause 4 describes the electrical environment. Clause 5 compares some of the major characteristics of component surge-protective devices. Clause 6, Clause 7, Clause 8, and Clause 9 give a description and theory of operation and guidance in applying and interpreting the respective test specifications for component gas tube (Clause 6), air gap (Clause 7), metal-oxide varistor (Clause 8), and avalanche junction semiconductor (Clause 9) surge-protective devices.

This guide also contains five informative annexes, which provide examples of applications of component surge-protective devices in surge protectors, equipment, and/or systems, and a bibliography. These informative annexes provide additional information for understanding and using this guide, but they are not part of the guide.

Copyright © 2006 IEEE. All rights reserved.

Copyright The Institute of Electrical and Electronics Engineers, Inc.
Provided by IHS under license with IEEE
No reproduction or networking permitted without license from IHS
Not for Resale

Annex A, Annex B, Annex C, and Annex D illustrate examples of component gas tube, air gap, metal oxide varistor (MOV), and avalanche junction semiconductor surge-protective devices, respectively, used either as single component surge protectors, or as individual components integral to the protected equipment or system. Annex E contains a bibliography of the sources used in developing this guide.

1.1 Scope

This guide covers the application of component air gaps, gas tubes, MOVs, and avalanche junction semiconductor surge-protective devices for use within surge protectors, equipment, or systems involving low-voltage power, data, communication, and/or signaling circuits. This guide is intended to be used with, or to complement, the related documents referred to in 2.1.

2. Normative references

The following referenced documents are indispensable for the application of this document. For dated references, only the edition cited applies. For undated references, the latest edition of the referenced document (including any amendments or corrigenda) applies.

This guide shall be used in conjunction with the publications listed in 2.1, 2.2, and 2.3.

2.1 IEEE standard test specifications for component surge-protective devices

The following test standards are used to characterize the surge-protective devices covered by this guide, either as component surge-protective devices, or as single technology, packaged low-voltage surge protectors.

NOTE—The definitions used in the following four standards and in this guide are the same with respect to terms that are common to both.

IEEE Std C62.31™-1987, IEEE Standard Test Specifications for Gas-Tube Surge-Protective Devices.[1,2]

IEEE Std C62.32™-1981, IEEE Standard Test Specifications for Low-Voltage Air Gap Surge-Protective Devices.

IEEE Std C62.33™-1982 (Reaff 1994), IEEE Standard Test Specifications for Varistor Surge-Protective Devices.

IEEE Std C62.35™-1987, IEEE Standard Test Specifications for Avalanche Junction Semiconductor Surge-Protective Devices.

2.2 IEEE standard test specifications for multiple component surge-protective devices

The following test standards are used to characterize multiple component "black box" surge protectors for use in low-voltage circuits, which constitute applications of the component surge-protective devices covered by this guide.

IEEE Std C62.36™-2000, IEEE Standard Test Methods for Surge Protectors Used in Low-Voltage Data, Communications, and Signaling Circuits.

[1] The IEEE standards or products referred to in this document are trademarks of the Institute of Electrical and Electronics Engineers, Inc.

[2] IEEE publications are available from the Institute of Electrical and Electronics Engineers, 445 Hoes Lane, P.O. Box 1331, Piscataway, NJ 08855-1331, USA (http://standards.ieee.org/).

Copyright © 2006 IEEE. All rights reserved.

Copyright The Institute of Electrical and Electronics Engineers, Inc.
Provided by IHS under license with IEEE
No reproduction or networking permitted without license from IHS
Not for Resale

IEEE Std C62.62™-2000, IEEE Standard Test Specifications for Surge-Protective Devices for Low Voltage AC Power Circuits.

2.3 General references

Accredited Standards Committee C2-2002, National Electrical Safety Code® (NESC®).[3]

ANSI C62.61-1993, Gas Tube Surge Arresters on Wire Line Telephone Circuits.[4]

ANSI C101.1-1992, Standard for Leakage Current for Appliances.

NFPA 70, 2005 Edition, National Electrical Code® (NEC®).[5]

IEC 61000-4-4 (1995), Electromagnetic compatibility for industrial process measurement and control equipment, Part 4: Electrical fast transient/burst requirements.[6]

IEEE Std 80™-2000, IEEE Guide for Safety in AC Substation Grounding.

IEEE Std 81™-1983, IEEE Guide for Measuring Earth Resistivity, Ground Impedance, and Earth Surface Potentials of a Ground System.

IEEE Std 367™-1996, IEEE Recommended Practice for Determining the Electric Power Station Ground Potential Rise and Induced Voltage from a Power Fault.

IEEE Std 487™-1992, IEEE Recommended Practice for the Protection of Wire Line Communications Facilities Serving Electric Power Stations.

IEEE Std C37.90.1™-1989, IEEE Standard Surge Withstand Capability (SWC) Tests for Protective Relays and Relay Systems.

IEEE Std C62.1™-1989, IEEE Standard for Gapped Silicon-Carbide Surge Arresters for AC Power Circuits.

IEEE Std C62.34™-2001, IEEE Standard for Performance of Low-Voltage Surge-Protective Devices (Secondary Arresters).

IEEE Std C62.41™-1991, IEEE Recommended Practice on Surge Voltages in Low-Voltage AC Power Circuits.

IEEE Std C62.92.1™-1987, IEEE Guide for the Application of Neutral Grounding in Electrical Utility Systems, Part 1—Introduction.

UL 943, Ground Fault Circuit Interrupters.[7]

UL 1449, 2nd Ed, Transient Voltage Surge Suppressors.

---

[3] The NESC is available from the Institute of Electrical and Electronics Engineers Inc, 445 Hoes Lane, P.O. Box 1331, Piscataway, NJ 08855-1331, USA (http://standards.ieee.org/).

[4] ANSI publications are available from the Sales Department, American National Standards Institute, 11 West 42nd Street, 13th Floor, New York, NY 10036, USA (http://www.ansi.org/).

[5] The NEC is published by the National Fire Protection Association, Batterymarch Park, Quincy, MA 02269, USA (http://www.nfpa.org/). Copies are also available from the Institute of Electrical and Electronics Engineers Inc, 445 Hoes Lane, P.O. Box 1331, Piscataway, NJ 08855-1331, USA (http://standards.ieee.org/).

[6] IEC publications are available from the Sales Department of the International Electrotechnical Commission, Case Postale 131, 3, rue de Varembé, CH-1211, Genève 20, Switzerland/Suisse (http://www.iec.ch/). IEC publications are also available in the United States from the Sales Department, American National Standards Institute, 11 West 42nd Street, 13th Floor, New York, NY 10036, USA.

[7] UL standards are available from Global Engineering Documents, 15 Inverness Way East, Englewood, Colorado 80112, USA (http://global.ihs.com/).

Copyright © 2006 IEEE. All rights reserved.

Copyright The Institute of Electrical and Electronics Engineers, Inc.
Provided by IHS under license with IEEE
No reproduction or networking permitted without license from IHS
Not for Resale

3. Definitions

The terms and definition used in this document are found in *The Authoritative Dictionary of IEEE Standards Terms* [B14][8]. In some instances, the definition in the current edition of *The Authoritative Dictionary of IEEE Standards Terms* [B14] may be either too broad or too restrictive; in such a case, an additional definition or note is included in this clause.

3.1 component surge-protective device (component SPD): A discrete surge-protective device involving a single specific technology and intended to be installed as a component within a surge protector or as a component housed within the equipment to be protected.

NOTE—Examples are "component air gap surge-protective device," "component gas tube surge-protective device," "component varistor surge-protective device," and "component avalanche junction semiconductor surge-protective device". The term surge arrester is also used to describe a single component.

3.2 component surge-protective device—voltage limiting type: A component surge-protective device that has a high impedance when no surge is present, but that can limit voltage by progressively and smoothly reducing its impedance when responding to a surge. Examples are component varistor and avalanche junction semiconductor surge-protective devices.

NOTE—Also commonly referred to as a "voltage clamping" device.

3.3 component surge-protective device—voltage switching type: A component surge-protective device that has a high impedance when no surge is present, but that can have a sudden voltage collapse to a low impedance state when responding to a surge. Examples are component air gap and gas tube surge-protective devices.

NOTE—Also commonly referred to as a "crowbar" device.

3.4 surge protector: A specific complete surge-protective device, as opposed to a component of a surge protector or a generic surge-protective device.

4. Electrical environment

Electrical and electronic systems and networks (facilities) are subject to disturbances from external sources of electrical energy. These sources include electric power circuits and natural phenomena, such as lightning and low-energy static influences. The effects of such disturbances may be confined to interference with normal use or operation, as in the case of noise or interference with signaling; or may be capable of creating hazards to users, maintenance personnel, and equipment.

4.1 Lightning and its effects

Lightning is a transient high-current electrical discharge. It occurs when some region of the atmosphere attains an electrical charge of sufficient potential to cause dielectric breakdown of the air.

The most common source of lightning is the thundercloud. Charged regions of the thundercloud emerge as shown in Figure 1. This concentration of charge induces a similar, but opposite, concentration of charge in the earth beneath the cloud, in another portion of the same cloud, or in another cloud. When the electric field gradient exceeds the dielectric strength of the air, lightning discharges (cloud-to-cloud, within a cloud, or cloud-to-ground) take place as shown in Figure 1.

[8] The numbers in brackets correspond to those in the bibliography in Annex E.

Copyright © 2006 IEEE. All rights reserved.

Copyright The Institute of Electrical and Electronics Engineers, Inc.
Provided by IHS under license with IEEE
No reproduction or networking permitted without license from IHS
Not for Resale

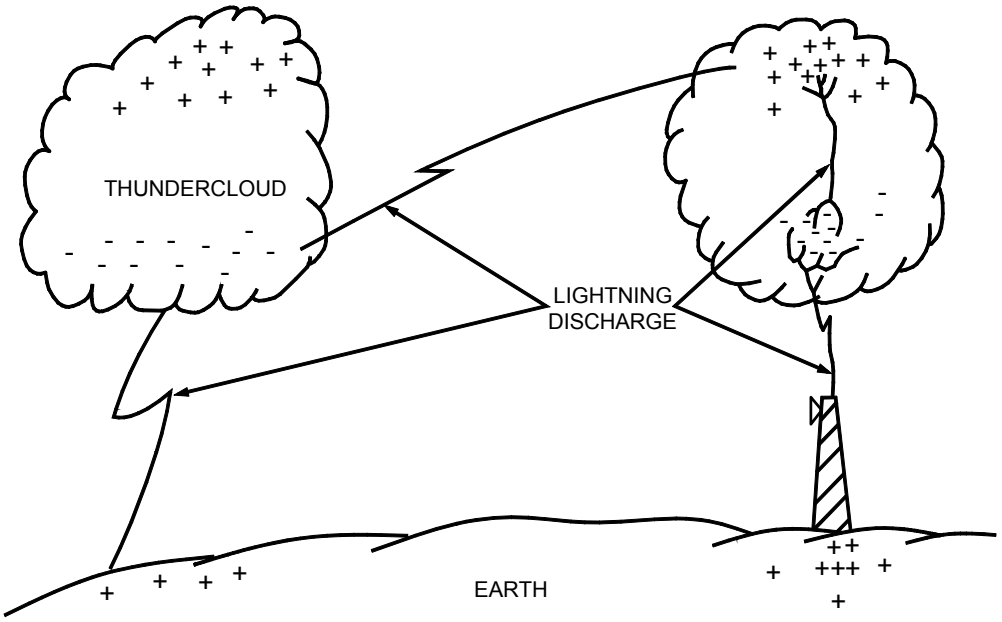

Figure 1—Source of lightning

A complete lightning flash may last as long as 0.25 s, and may consist of several strokes of high-current discharge separated by periods of up to 0.1 s when current flow is significantly reduced. Figure 2-1 and Figure 2-2 illustrate the typical time history of a lightning flash (see Anderson and Ericksson 1980 [B1] and Cianos and Pierce 1972 [B3]). Some studies have shown that typical times to peak current for most subsequent strokes is less than 1.5 μs, with most values between 0.1 μs and 0.7 μs (see Sandia Laboratories [B30]). IEC 61312-1 [B13] specifies a front time of 0.25 μs as a lightning current parameter for a stroke subsequent to the first stroke.

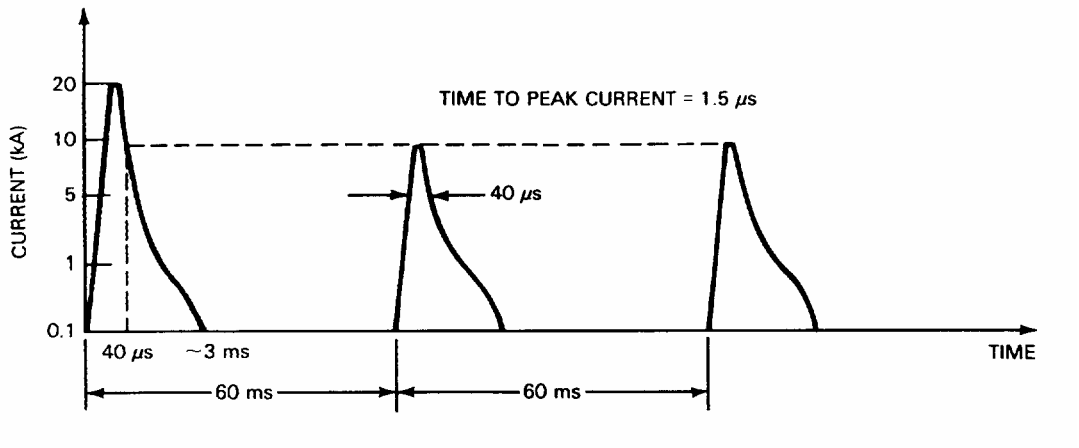

Figure 2-1—Time history of typical (basic) lightning models—flash without any continuing current surges

Copyright © 2006 IEEE. All rights reserved.

Copyright The Institute of Electrical and Electronics Engineers, Inc.
Provided by IHS under license with IEEE
No reproduction or networking permitted without license from IHS
Not for Resale

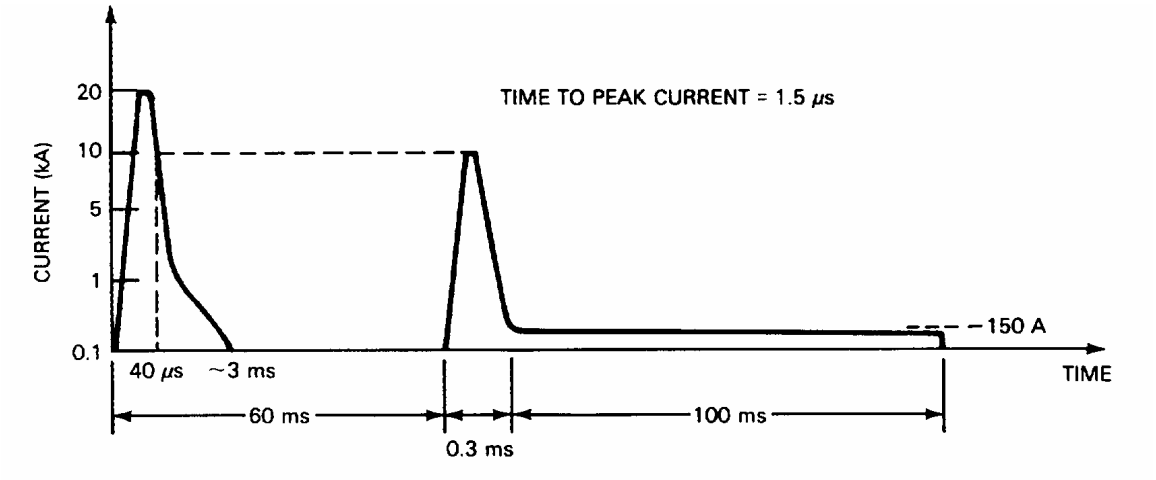

Figure 2-2—Time history of typical (basic) lightning models—flash with final stage continuing current

The crest current magnitude of an actual lightning stroke varies widely. Figure 3 illustrates the distribution of a lightning stroke's crest currents to structures (see Anderson and Ericksson 1980 [B1], Sunde 1968 [B33], and Cianos and Pierce 1972 [B3]). Typical surges conducted or induced into wire line facilities would be considerably smaller because of the availability of alternate paths. As a result, protectors at the terminations of these facilities are not designed to withstand the full crest current of direct strokes.

Copyright © 2006 IEEE. All rights reserved.

Copyright The Institute of Electrical and Electronics Engineers, Inc.
Provided by IHS under license with IEEE
No reproduction or networking permitted without license from IHS
Not for Resale

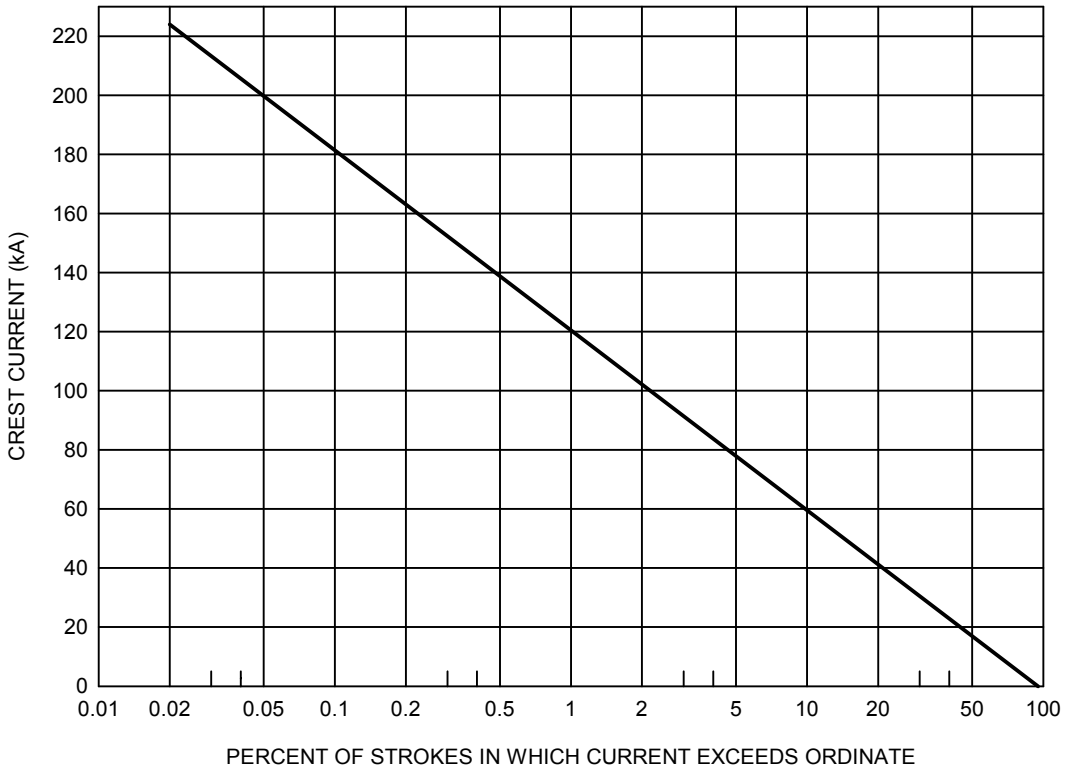

Figure 3—Distribution of lightning stroke crest currents

Facilities may be subjected to lightning-caused potentials in the following manners:

a) Induction from nearby strokes to earth.

b) Arcing to facilities from the earth, a tree, or a structure incurring a direct stroke.

c) Lightning currents also may be conducted to wire line facilities when strokes take place near grounded points. For example, a stroke to ground near a protected terminal will raise the earth potential at the protector so that surge currents will flow from the protector ground, through the protector, to other ground points outside the direct influence of the stroke.

4.1.1 Factors affecting the exposure to lightning damage

When estimating the exposure to lightning damage, several variables shall be considered. Briefly, they include:

a) *Lightning flash density*. Lightning flash density, or ground flash density (GFD), can be used as a measure of potential exposure to lightning damage. GFD is the number of ground flashes per square kilometer per year in a specified region. Maps showing the average U.S. lightning flash density are available (see Global Atmospherics [B12]).

In cases where only thunderstorm days or thunderstorm hours are known, GFD can be estimated as follows:

Copyright © 2006 IEEE. All rights reserved.

Copyright The Institute of Electrical and Electronics Engineers, Inc.
Provided by IHS under license with IEEE
No reproduction or networking permitted without license from IHS
Not for Resale

Converting thunderstorm days to GFD

$N_g = 0.04\ T_D^{1.25}$

where

T_D is Keraunic level in thunderstorm days/year
N_g is GFD (flashes per square kilometer each year)

Converting thunderstorm-hours to GFD

$N_g = 0.05\ T_H^{1.1}$

where

T_H is thunderstorm-hours/year
N_g is GFD (flashes per square kilometer each year)

b) *Earth resistivity*. Earth resistivity is also important in determining the exposure to lightning damage. The unit of earth resistivity, the ohm-meter, is defined as the resistance, in ohms, between opposite faces of a cube of earth one cubic meter in volume (see U.S. Department of Agriculture 1982 [B7] and IEEE Std 81-1983). If earth resistivity is high, the distance through the earth over which a given stroke would arc to a buried conductor or structure, and the distance that lightning currents would have to travel along a conductor before attenuating to harmless values are greater than if the earth resistivity is low. The result is that the exposure to lightning damage may be greater in some areas of the country with high earth resistivity and only moderate incidence of storms, than it is in other locations with low resistivity and greater incidence. Earth resistivity varies from a few ohm-meters to more than 10 000 ohm-meters.

c) *Other considerations*. Engineering judgment, based on the best available experience and information, needs to be exercised to obtain optimum protection for the system under consideration. For example, a microwave tower in a low-lightning incidence area, but on a hilltop, may require special protection while facilities in a city of tall buildings located in an area of high-lightning incidence, but served by cable in duct runs, may require only minimal protection.

4.2 Low-energy static source

In some areas, open wire lines are subjected to excessive static potentials through wind-blown sand or snow. Such potentials are low in energy, the latter being proportional to the capacitance between line and earth and therefore, proportional to the length of the lines involved. The resulting interference effects are in the category of circuit noise, mainly due to intermittent breakdown of protective devices.

4.3 Power interference

The power network is an important environmental factor that can adversely affect low-voltage wire line facilities in a number of ways. Capacitive or inductive coupling, ground faults, or direct contacts can produce hazardous voltages. They can also cause damage to facilities as a result of overstressed or overheated elements. Permissible induced ac interference voltages should be considered when determining the minimum dc breakdown voltage of a gas tube surge arrester. See IEEE Std 367-1996 and IEEE Std 487-1992.

Copyright © 2006 IEEE. All rights reserved.

Copyright The Institute of Electrical and Electronics Engineers, Inc.
Provided by IHS under license with IEEE
No reproduction or networking permitted without license from IHS
Not for Resale

4.3.1 Characteristics of ac power systems and their effects on wire line facilities

An electrical power network consists of many kinds of systems that generally fall into two types of circuit configurations (see Klewe [B17], Bodle et al 1976 [B2], IEEE Std 487-1992, and IEEE Std C62.92.1-1987).

4.3.1.1 Types of circuits

a) *Ungrounded circuits.* In an ungrounded circuit, single line-to-ground faults produce low-ground return currents, since the only return path to the source is the distributed capacitance-to-ground of the ungrounded line. These low currents are unlikely to induce disturbing currents and voltages into nearby wire line facilities. However, the low currents are unlikely to de-energize the power circuit and a second line-to-ground fault on another phase conductor of the same line may produce disturbing currents or voltages.

b) *Grounded circuits.* Grounded circuits permit high currents during single line-to-ground faults because of the low-impedance return path. These currents may be high enough to induce disturbing voltages into nearby wire line facilities. However, rapid de-energization of faults is easier to achieve on these systems and the disturbance is likely to be of short duration.

4.3.1.2 Forms of coupling

There is usually more than one form of coupling between power systems and low-voltage wire line facilities. A combination of capacitive, resistive, and inductive coupling is usually present.

a) *Capacitive coupling.* A steady state voltage can appear on a low-voltage wire line facility located in the electric field of a power system. The voltage level of an insulated wire line is determined by the relative position of the two facilities and by the voltage of the power line facility. The current that can flow to ground from a wire line is dependent upon the capacitance between the two facilities, and is therefore a function of the length of exposure. Electric influence through capacitive coupling is rarely a problem on properly terminated low-voltage wire lines.

b) *Resistive coupling.* Resistive coupling can be divided into two categories:

   1) *Power contact.* Damage to wire line facilities due to accidental contacts between electric power supply lines and low-voltage wire line facilities (aerial or underground) is a possible hazard requiring protection measures. In extreme cases, the potential on the low-voltage wire line facility may approach that of the power conductor and currents may cause fusing of the low-voltage plant. Fault current duration may range from a fraction of a second to 5 s if the fault is interrupted automatically, or otherwise to indefinitely large time intervals (see Klewe [B17]).

   2) *Ground potential rise.* When a fault to ground occurs on a transmission or distribution line terminating in a grounded-neutral transformer bank at a power station or substation, fault current will flow from ground to the system neutral by way of the station grounding system. Since the grounding system has finite impedance to ground, it will experience a rise in potential with respect to remote earth, because of this ground-return fault current. Grounded facilities near the power station or substation can experience a portion of this voltage with respect to wire line facilities that are remotely terminated. These same effects can be experienced in the vicinity of the power fault.

Copyright © 2006 IEEE. All rights reserved.
Copyright The Institute of Electrical and Electronics Engineers, Inc.
Provided by IHS under license with IEEE
No reproduction or networking permitted without license from IHS
Not for Resale

c) *Inductive coupling.* Low-voltage wire line facilities are subject to inductive coupling from power lines. The resulting induced voltages may be present continuously at permissible levels, in which case they should be accommodated in the system design, or they may be present at high levels during power faults, and require protective measures. The magnitude of the induced voltage is determined by the power line currents and the mutual impedance of the two systems (see Bodle et al 1976 [B2] and Klewe [B17]). A survey conducted on communications lines (see Bell Communications Research 1987 [B19]) indicates that the continuous levels experienced are normally very low, although on long exposures it is possible for the rms potential to exceed 50 V. During power line ground faults or periods of abnormal operation (for example, two-phase operation of a three-phase line and unbalanced phase currents, which may occur at different times of day), inductive coupling to the wire line may result in voltages up to several thousand volts. Fault current duration may range from a fraction of a second to 5 s if the fault is interrupted automatically, or otherwise to indefinitely long time intervals (see Bell Communications Research 1987 [B19]).

4.4 Switching transients

Switching transients can be divided into two general categories—internal switching transients and external switching transients.

a) *Internal switching transients.* Internal switching transients occur in wire line facilities when inductances (relay coils, transformers, etc.) are switched off. Parameters such as the amplitude of the switching current and the stored energy are usually known. Therefore, the surge voltage magnitude can be calculated. See IEEE Std C37.90.1-1989, IEEE Std C62.41-1991, and IEC 61000-4-4 (1995).

b) *External switching transients.* Transients may be induced in wire line facilities by means of capacitive or inductive coupling when switching occurs in nearby power systems [see item a) and item c) of 4.3.1.2].

Capacitively coupled transients are possible if high rates of change of voltage are generated in power lines. For example, voltage transients can occur during switching operations in power systems. See IEEE Std C37.90.1-1989, IEEE Std C62.1-1989, IEEE Std C62.41-1991, and IEC 61000-4-4 (1995).

Inductively coupled transients are possible if high current rates of change are generated in power lines. For example, current transients can occur during fault conditions or when switching power factor correction capacitors.

4.5 Electrostatic discharge

Electrostatic discharge (ESD) is one of the most common types of pulsed electromagnetic interference (EMI) that plagues electronic equipment. Although the energy contained in an ESD pulse is low compared to other threats, such as electromagnetic pulse (EMP) (see 4.6), the extremely high frequencies associated with ESD result in radiated coupling of the ESD to even short connections in electronic circuits. This coupling is frequently at a sufficient level to upset electronic circuits.

The sources of ESD are virtually limitless. The only requirement is that two dissimilar materials be brought into contact in order to develop a charge. This can occur through activities such as paper moving through a printer, a chair being moved across the floor, or the familiar case of a person walking across a carpet.

The two most common sources of ESD, for many electronic products, are personnel and mobile furnishings, such as chairs on casters or equipment carts. These two broad categories are identified as personnel ESD and furniture ESD.

Copyright © 2006 IEEE. All rights reserved.

Copyright The Institute of Electrical and Electronics Engineers, Inc.
Provided by IHS under license with IEEE
No reproduction or networking permitted without license from IHS
Not for Resale

ESD can be further subdivided into direct and indirect ESD events. In a direct ESD event, the arc from the intruder terminates directly on the equipment victim. However, in an indirect ESD event, the ESD arc terminates on an object other than the equipment victim. In the case of indirect ESD, it is the electromagnetic field from a nearby ESD event that threatens the equipment victim.

Floor-standing electronic equipment is commonly subjected to direct ESD from both personnel and furniture sources. However, tabletop equipment is usually only subjected to direct ESD from personnel because furniture typically cannot touch tabletop products directly. Of course, both floor-standing and tabletop equipment are subjected to indirect ESD from both personnel and furniture.

4.5.1 Charge voltages

Personnel can achieve charge voltages as high as 15 kV, with levels as high as 20 kV in extreme cases. In the case of furniture ESD, charge voltages seldom reach such high levels. Typically, furnishings have sharp corners or radii that encourage corona discharge. As a result, furnishings usually do not achieve charge voltages in excess of 6 kV, or 8 kV in extreme situations (see IEC 801-2 [B15] and CISPR-22 [B16]).

4.5.2 ESD current

Although ESD threat levels are often specified in terms of charge voltage, it is in fact the discharge current that is more indicative of the threat level.

For personnel ESD, peak discharge currents can attain levels of up to tens of amps. However, this peak current may only exist for a few nanoseconds or less. For furniture ESD, peak current levels may be much higher than for personnel ESD, even though the maximum charge voltages are lower. Peak currents of greater than 100 A may be achieved from furniture ESD. In addition, this high current level may last for several nanoseconds. As a result, even though the charge voltages associated with furniture ESD are less than those for personnel ESD, furniture ESD is typically a much more severe threat to electronic equipment.

4.5.3 ESD frequency spectrum

An ESD pulse contains a broad spectrum of frequency components. The spectrum ranges from tens of MHz to as high as 5 GHz, or more. The upper boundary of the frequency spectrum is related to many factors including the charge voltage. For personnel ESD, the fastest pulse rise times (and thus highest frequencies) typically occur at charge voltages of less than 4 kV. These fast rise times are usually faster than 350 ps. At higher charge voltage levels, such as 10 kV or more, ESD pulse rise times are typically much slower. Rise times as slow as 20 ns are possible.

With furniture ESD, the initial rise time of the pulse may also be faster for lower charge voltages. In fact the initial rise time of furniture ESD may also be less than 350 ps, just as for personnel ESD. However, the rise time of furniture ESD at higher charge voltages is typically not slowed to the same degree as for personnel ESD. Thus, the maximum frequency would show less variation for furniture ESD than for personnel ESD.

4.5.4 Energy levels

Because the energy stored in an ESD is related to the square of the charge voltage, and since personnel ESD can involve higher charge voltages, it is typically possible for personnel ESD to have a higher energy level than for furniture ESD. In the case of personnel ESD, the energy stored would typically not exceed 15 mJ, although levels as high as 80 mJ could be achieved in extreme cases. With furniture ESD, the energy stored would typically not exceed 5 mJ, although levels as high as 15 mJ could be achieved in extreme cases.

Copyright © 2006 IEEE. All rights reserved.

Copyright The Institute of Electrical and Electronics Engineers, Inc.
Provided by IHS under license with IEEE
No reproduction or networking permitted without license from IHS
Not for Resale

4.5.5 Field strengths

Field strengths for indirect personnel ESD 10 cm from an arc were calculated to reach 4 kV/m for the E-field and 15 A/m for the H-field. Because furniture ESD is typically more likely to cause failure than fields from personnel ESD, it is believed that fields from furniture ESD are even higher than those for personnel ESD.

4.5.6 Rate of occurrence

The rate at which ESD occurs is dependent on the degree to which static charging is controlled. For example, if charging is controlled by the use of such items as antistatic carpets and controlled humidity, ESD at peak current levels of 5 A or higher, may be expected every 2 h to 3 h. However, if no special ESD preventive measures are taken, ESD peak currents of more than 5 A may be expected to occur once per hour. Higher ESD currents, of course, occur less frequently. In a controlled environment, peak ESD current levels of more than 20 A would occur only about once every 70 h. In an uncontrolled environment, peak currents of 20 A or more would only occur about every 10 h. In any case, however, the frequency of occurrence is too great to be ignored.

4.6 Electromagnetic pulse

When a nuclear device explodes at high altitudes, gamma rays are generated, traveling away from the explosion at the speed of light. When these gamma rays collide with molecules, electrons are knocked off (Compton effect). This results in a band of high speed Compton electrons, moving generally towards earth. The interaction between these electrons and the earth's magnetic field creates a very fast rising, single radiated pulse. The effects of this pulse will be felt on all the earth's surface visible from the point of the explosion. The extended geographical coverage, high-peak field strength, and fast rise time may result in high-amplitude transients on wire lines and may threaten terminal equipment (see NATO 1977 [B8]; Dept. of Defense 1972, [B9] and [B10]; Lerner 1981[B18]; and Vance [B36]).

5. Comparison and selection of component surge-protective devices

This clause provides a general discussion of the similarities and differences between the component SPDs covered by this guide. It is intended to assist the reader in selecting the appropriate component, or combination of components, in order to achieve the characteristics desired of a surge protector, or to achieve the desired level of protection for a specific product or system within which the component SPD is installed as an integral part.

Component SPDs generally fall into one of two types: 1) voltage switching ("crowbar") or 2) voltage limiting ("clamping") (see Clause 3). 5.1 provides a general comparison between these two types of SPDs. 5.1.1 provides a general comparison between voltage switching SPDs. 5.1.2 provides a general comparison between voltage limiting SPDs. 5.1.3 and Table 1 provides a broad comparison between related device parameters of component SPDs.

5.1 Comparison between voltage switching and voltage limiting component SPDs

Component air gaps and gas tubes are voltage switching SPDs that effectively behave as short circuits when operating in response to voltage surges. In so doing, these devices may be used to divert substantial surge current resulting in voltages significantly lower than the normal operating voltage. When this occurs, the energy of the surge needs to be dissipated elsewhere in the circuit.

Component varistors and avalanche junction semiconductors are voltage limiting component SPDs that effectively behave like low non-linear impedances, but not short circuits, when operating in response to voltage and current surges. Therefore, for the same level of surge current, these devices need to be capable of dissipating greater power than air gaps and gas tubes.

Copyright © 2006 IEEE. All rights reserved.

Copyright The Institute of Electrical and Electronics Engineers, Inc.
Provided by IHS under license with IEEE
No reproduction or networking permitted without license from IHS
Not for Resale

Component air gaps and gas tubes exhibit very high resistance and low capacitance under normal (i.e., non-surge) operating conditions. Consequently, under non-surge conditions these devices conduct little or no current in the circuit.

Component varistors and avalanche junction semiconductors exhibit lower resistance and higher capacitance under normal (i.e., non-surge) operating conditions than air gaps or gas tubes. Consequently, under non-surge conditions attention needs to be paid to the current conducted by these devices in the circuit.

In the case of air gaps and gas tubes, the voltage across the terminals of these devices when responding to a surge can be lower than the voltage that is normally present across the terminal under non-surge conditions. If the circuit impedance between these devices and normal operating voltage source is low at normal operating frequencies of the circuit, these devices might effectively short-circuit or ground the circuit conductors during surges resulting in follow (power) current. Consequently, the operation of these devices when connected directly across a low impedance line does not normally provide interruption-free service unless they are used in conjunction with other components to avoid a short-circuit being applied to the line. This may be particularly important to maintain critical services (see, for example, IEEE Std 487-1992). In many communication and signaling circuits, the gas tube component device can be designed to self-reset (see Annex A).

In contrast to air gaps and tubes, the voltage appearing across the terminals of MOVs and avalanche junction semiconductor devices during a surge is greater than the normal voltage. Consequently, power follow current is not normally a concern for these devices as it is with air gaps and gas tubes, and their operation does not normally interfere with the circuit.

Finally, the published impulse breakdown voltages of gas tube and air gap surge arrester devices are defined for specific voltage rates of rise. Higher voltage rates of rise may result in measured limiting voltages greater than the published impulse breakdown voltage. In contrast, the published clamping voltage of a varistor or avalanche junction semiconductor is determined for specific current amplitudes and current waveforms. Higher current amplitudes or faster rising current waveshapes may result in measured voltages greater than the published voltage clamping levels.

The differences in characteristics between voltage limiting and voltage switching component SPDs are such that they can be made to complement each other when used in combinations that take advantage of the strengths of each.

5.1.1 Comparison between voltage switching SPDs (air gaps and gas tubes)

Air gap SPDs typically have a wider statistical variation of dc (or ac) and impulse breakdown voltage than gas tube surge SPDs of similar nominal dc breakdown voltage rating. Thus, in cases where the difference between normal operating voltage levels and the required protection voltage level is small, it is possible that some percentage of air gap SPDs at both ends of the statistical performance distribution would both interfere with normal operation and allow damage to the protected equipment. Consequently, in applying air gap SPDs the user should apply an appropriate margin between normal operating voltage and the published dc (or ac) breakdown voltage. With gas tube SPDs this adverse characteristic is much reduced (see 6.2).

For applications on typical communications and signaling lines, the difference in sensitivity to voltage rate of rise between air gap and gas tube surge SPDs is not significant enough to be of importance. For gas tube applications where surges with high rates of rise (greater than 1000 V/μs) are present, the use of specialized gas tubes should be considered. SPDs having three or more electrodes in a common sealed chamber are available in gas tubes but not air gap SPDs. The common chamber design in multi-electrode gas tube SPDs provides an improved balance between the line terminals by reducing the impulse or AC transverse voltage.

Generally, gas tube devices exhibit a glow-mode characteristic that is not found with air gap devices. A device in the glow mode will operate at a higher temperature than a device not in the glow mode conducting the same current. As a result, gas tube SPDs may have shorter ac life at certain current levels than air gap surge arresters.

Copyright © 2006 IEEE. All rights reserved.

Copyright The Institute of Electrical and Electronics Engineers, Inc.
Provided by IHS under license with IEEE
No reproduction or networking permitted without license from IHS
Not for Resale

Hermetically sealed gas tube SPDs with long surface leakage paths between electrodes are less susceptible than air gap SPDs to dust, insect contamination, and temperature and humidity variations. These conditions may cause failure of an air gap SPD due to low-insulation resistance or low-breakdown voltage. Some gas tube SPDs contain minute amounts of radioactive material; air gap SPDs do not.

The most significant difference between air gap and gas tube SPDs is their useful impulse life in actual service and in impulse life tests, and their sensitivity to dust, insect contamination, temperature, and humidity. For a given set of impulse life test criteria, gas tube SPDs typically survive from 4 to 40 times more life test surges than air gap SPDs. Consideration should be given to short-term versus long-term cost benefits for one type of device over the other.

5.1.2 Comparison between voltage limiting type SPDs

MOVs and avalanche junction semiconductors are available in a variety of rated parameter values (see IEEE Std C62.33-1982 and IEEE Std C62.35-1987). Avalanche junction semiconductors can limit voltages to very precise levels and are available in low-voltage ranges. MOVs have symmetrical volt ampere characteristics, while avalanche junction semiconductor devices are available with both symmetrical and asymmetrical volt-ampere characteristics. For avalanche junction semiconductor devices reference should be made to the manufacturer's data for clamping level for both polarities. The capacitance for both types of devices is relatively high and varies with the applied bias. Generally, the capacitance for both these devices varies inversely with rated voltage, with the capacitance being greatest at the lower voltage ratings. The capacitance associated with these devices should be taken into account when connecting the devices between ungrounded ac circuit conductors and the equipment ground, since objectionable capacitively coupled leakage currents to ground may be introduced.

Generally, the failure mode in avalanche junction semiconductors and varistors is the short-circuit mode. It is suggested that the need for overcurrent protection be determined for both devices.

5.1.3 Comparison between related device parameters

Table 1 is intended to provide an overview of some of the parameters of gas tubes, air gaps, MOVs, and avalanche junction semiconductor devices. The ranges shown in the table are for typical, commercially available single component devices. Values outside these ranges are also possible for individual devices, or packages incorporating multiple devices connected in parallel. Although the descriptions of the related device parameters in Table 1 are grouped based on their similarities, the clauses and subclauses referenced in the table, which are contained in this guide and which provide a general description of the meaning of the related device parameters, must be reviewed before attempting to compare different devices. The reader is cautioned that for a particular component the parameters in this table may be higher or lower, may not be independent of one another, and that some combinations of parameters may not be available. The reader is cautioned that the test surges used to obtain performance values for different types of SPDs are in some cases different though they may appear at first to be the same, thus making a direct comparison of values possibly inappropriate. An example is an 8/20[9] test current wave that actually flows through a component SPD under test versus a current wave supplied by a combination wave generator to a hybrid SPD in which case the current wave is an 8/20 generator short-circuit current wave, and may not be the actual test current that passes through the device.

Reference should be made to the complete specifications for a given device and a detailed analysis of the specific application should be conducted.

[9] "The impulse waveshape designation indicates the time in microseconds for a surge waveform to rise to its peak value followed by the time in microseconds for that surge waveform to decay to 50% of its peak value. This nomenclature is more thoroughly defined in IEEE Std C62.1-1989, Clause 2, Definitions [wave shape designation (of an impulse)]; in IEEE Std C62.37-1996, Annex A, Definition A.2.12(1); and in IEEE Std C62.37.1-2000, Clause 7.2.1."

Copyright © 2006 IEEE. All rights reserved.

Copyright The Institute of Electrical and Electronics Engineers, Inc.
Provided by IHS under license with IEEE
No reproduction or networking permitted without license from IHS
Not for Resale

Table 1—Comparison of different device parameters (higher or lower values are possible

Related device parameters	Gas tubes/ air gaps	MOVs	Avalanche junction semiconductors
DC breakdown voltage	75 V to >1200 V	–	–
Nominal varistor voltage, V_n	–	3.5 V to >1200 V	–
Breakdown Voltage, $V_{(br)}$	–	–	3 V to >850 V
Clauses and subclauses	**6.3.1/7.3.2**	**8.3.6**	**9.3.7**
Capacitance	0.5 pF to 5 pF	3 pF to 30 000 pF	5 pF to 10 000 pF
Clauses and subclauses	**6.3.2/7.3.5**	**8.3.8**	**9.3.12**
Maximum single impulse discharge current	5000 A to 100 000 A (8/20) 10 A to 2000 A (10/1000)	–	–
Rated single pulse transient current I_{tm}	–	8 A to 80 000 A (8/20)	–
Rated peak impulse current I_{ppm}	–	–	2.5 A to 40 A (10/1000)
Clauses and subclauses	**6.3.5/7.3.5**	**8.3.2**	**9.3.2**
Impulse breakdown voltage	250 V to >1500 V (100V/μs)	–	–
Clamping voltage V_c	–	17 V to 4000 V (8/20)	7 V to 540 V (10/1000)
Clauses and subclauses	**6.3.4/7.3.4**	**8.3.1**	**9.3.1**
Rated RMS voltage, V_m	–	3 V to 1500 V	–
Rated stand-off voltage, V_{wm}	–	–	3 V to 700 V
Clauses and subclauses		**8.3.4**	**9.3.3**
DC stand-by current, I_d	–	0.5 μA to 200 μA	0.01 μA to 1000 μA
Insulation resistance	1 GΩ to 10 GΩ	–	–
Clauses and subclauses	**6.3.3/7.3.3**	**8.3.5**	**9.3.4**

NOTE—The purpose of this table is to show similarities among established parameter terminology of the different component technologies. This application guide uses existing terms; it does not create new terms or change existing ones. Table 1 groups different parameter terms for easy comparison.

6. Gas tubes

This clause presents a description, theory of operation, test characteristics, and an application guide for component gas tube arrester surge-protective devices.

6.1 Description

Gas tube arresters consist of two or more metallic electrodes that are separated by gap(s) in a hermetically sealed envelope containing an inert gas or mixture of gases, usually at less than atmospheric pressure. Some of the gases used are argon, helium, hydrogen, and nitrogen. Electrode spacing is maintained by means of ceramic, glass, or other insulating materials, that may form a part of the sealed envelope. The electrodes are fitted with a variety of terminations suitable for mounting on circuit boards, clip terminals, sockets, or for incorporation in a protector. Figure 4 illustrates in a simplified manner the functional components of a typical two-electrode gas tube arrester and its circuit symbol. Other types of gas tube geometries, including those that employ more than two electrodes, are also in common use.

Copyright © 2006 IEEE. All rights reserved.

Copyright The Institute of Electrical and Electronics Engineers, Inc.
Provided by IHS under license with IEEE
No reproduction or networking permitted without license from IHS
Not for Resale

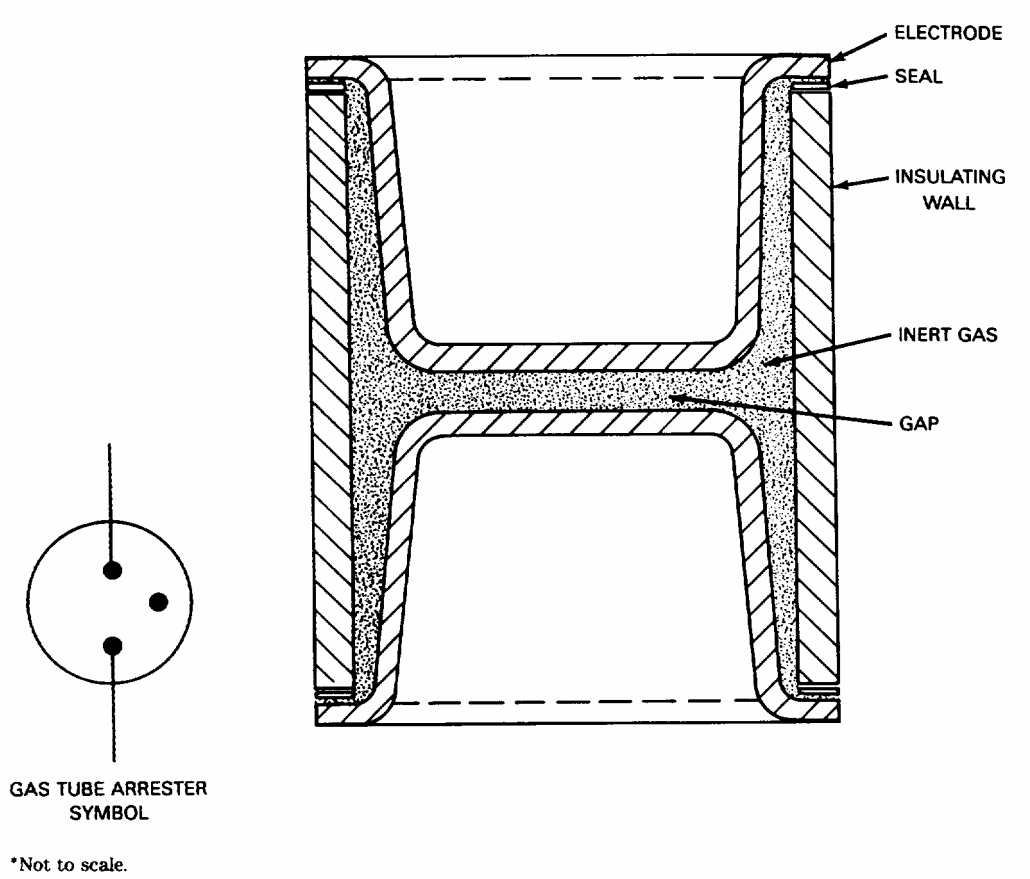

Figure 4—Cross-sectional view of the functional components of a two-electrode gas tube arrester (simplified)

6.2 Theory of operation

Gas tube arresters operate as cold cathode discharge tubes. An electrode may serve as either an anode or a cathode, depending on the polarity of the applied voltage. When the gap of a gas tube arrester is subjected to an increasing field intensity due to a voltage surge, it will break down at some voltage that is determined by the design of the gas tube arrester, and the rate of rise of the voltage surge. The faster the rate of rise of the surge wavefront, the higher the impulse breakdown voltage. Design factors include spacing between electrodes, type of gas used, gas pressure, electrode configuration, and surface coating.

Because the inter-electrode distance in a gas tube is finite and the flight time of an electron across this gap is also finite, time is needed to begin and to form the electron avalanche required for breakdown. This time is dependent on the amount of overvoltage above the DC breakdown voltage of the tube. If the applied voltage wave is increasing rapidly, of the order of volts per microsecond, the small amount of time required to begin and form the avalanche may allow the rapidly rising voltage to exceed the DC breakdown voltage by an amount sufficient to harm the equipment intended to be protected. Generally, the faster the rate of rise, the higher the overvoltage required for operation of the tube. In order to minimize this effect, gas tube manufacturers may place graphite lines on the interior walls of the insulator. These act to provide free electrons from partial gas discharge at their ends.

For a particular electrode material and configuration, the dc breakdown potential for a certain gas or gas mixture follows Paschen' s law, which states that the breakdown voltage is a function only of the product of

Copyright © 2006 IEEE. All rights reserved.

Copyright The Institute of Electrical and Electronics Engineers, Inc.
Provided by IHS under license with IEEE
No reproduction or networking permitted without license from IHS
Not for Resale

the gas pressure multiplied by the distance between the plane electrodes. See Cobine 1958 [B4] and Druyvesteyn and Penning [B6].

Small amounts of radioactive material may be placed inside the gas tube during manufacture. These radioisotopes may be introduced as a solid or in gaseous form. Their purpose is to provide a constant low level source of free electrons. A gas tube operating in the light will have free electrons present in its gas chamber due to photoionization. In the dark this source of free electrons is absent and the DC breakdown of the tube can be considerably higher. With the addition of a radio isotope a constant source of electrons is available to stabilize breakdown.

In the nonconducting state, the gas tube arrester has a very high resistance, in the order of several thousand megohms. Once breakdown occurs, various operating states are possible, depending upon the external circuitry. These states are exhibited in the voltampere characteristic, typical of a gas tube arrester (see Figure 5). At currents less than the glow-to-arc transition current, a glow region exists. At low currents in the glow region, the voltage is nearly constant; at high glow currents, some arrester types may enter an abnormal glow region in which the voltage increases. Beyond this abnormal glow region the tube impedance decreases in the transition region into the low-voltage arc condition. The arc-to-glow transition current may be lower than the glow-to-arc transition. The voltampere characteristic, in conjunction with the external circuitry, determines the ability of the gas tube arrester to extinguish after passage of a surge, and also determines the energy dissipated in the arrester during the surge. Specific examples of circuit behavior of gas tube arresters can be found in Annex A. The voltampere characteristic is controlled by the design of the gas tube arrester.

When breakdown of a gas tube arrester occurs, a low-impedance condition is produced. The energy remaining in the disturbing transient is shunted and reflected away from the components to be protected.

Copyright © 2006 IEEE. All rights reserved.

Copyright The Institute of Electrical and Electronics Engineers, Inc.
Provided by IHS under license with IEEE
No reproduction or networking permitted without license from IHS
Not for Resale

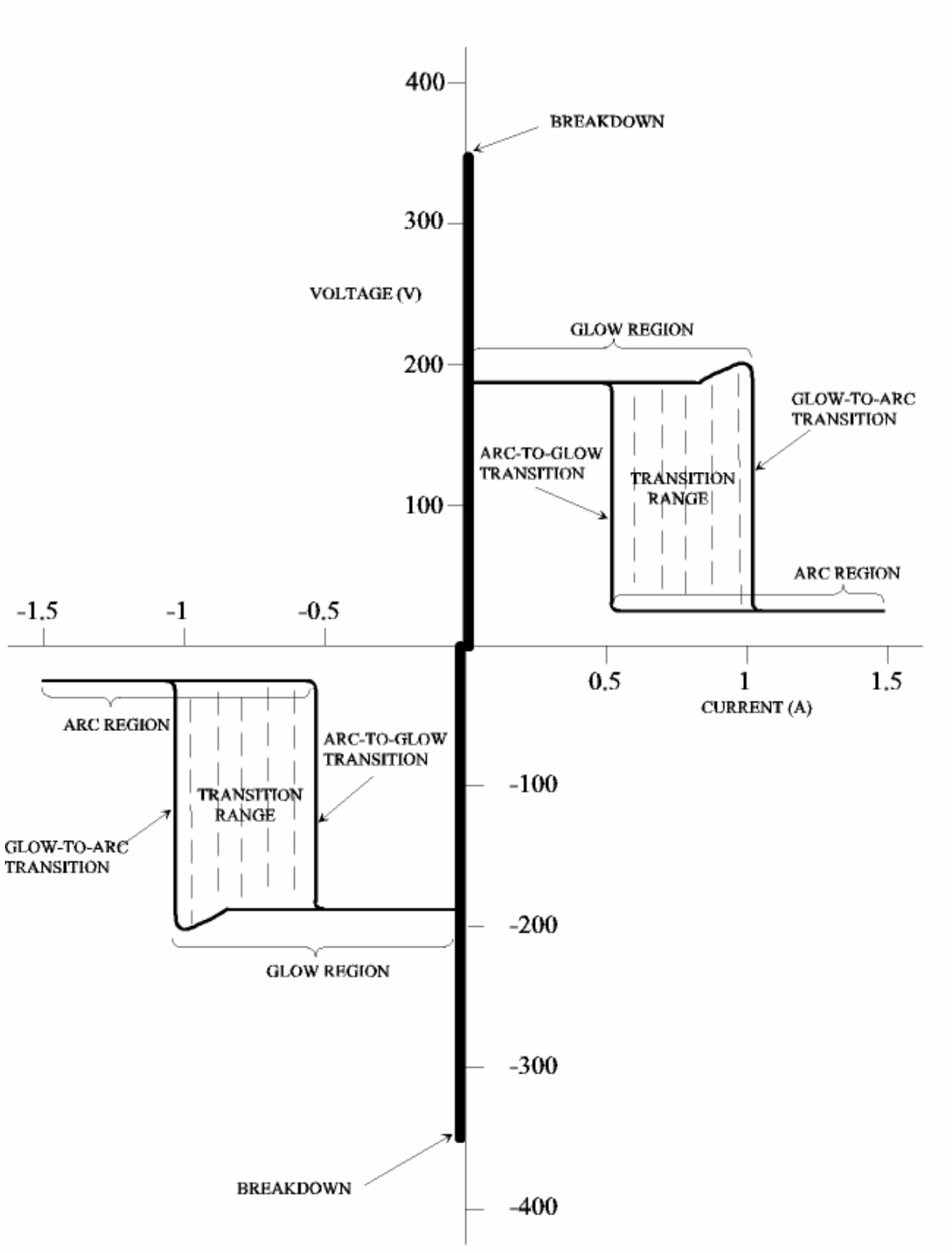

Figure 5—Typical voltampere characteristic for gas tube arresters

Copyright © 2006 IEEE. All rights reserved.

Copyright The Institute of Electrical and Electronics Engineers, Inc.
Provided by IHS under license with IEEE
No reproduction or networking permitted without license from IHS
Not for Resale

6.3 Gas tube arrester test characteristics

This subclause applies to all gas tube surge-protective devices. For further information about the following tests, see IEEE Std C62.31-1987.

6.3.1 DC breakdown voltage test

DC breakdown is a breakdown caused by a slowly rising voltage. Unless otherwise specified, a rate of rise not exceeding 2 kV/s is used for this test. Breakdown voltages of many gas tube arresters will only vary slightly, when the rate of rise is less than 2 kV/s.

Low dc breakdown voltage is of concern where the crest value of the sum of the system operating voltages and any permissible low-frequency extraneous voltages (for example, induction from power lines) approach the lower-limit dc breakdown value of the gas tube arrester. Should the crest value exceed the dc breakdown voltage of the gas tube arrester, causing it to sparkover, interruption of the transmission or signaling on the circuit will occur.

During the life of gas tube arresters, after being exposed to a number of transients and disturbances, the gas tube arrester usually deteriorates in a manner whereby the dc breakdown voltage changes (typically the breakdown voltage is reduced). This may be accompanied by a degradation of other parameters, such as insulation resistance and impulse breakdown voltage.

If the dc breakdown voltage is too high, the gas tube arrester will fail to break down and will not conduct a disturbing low-frequency current to ground, thus failing to protect the circuit.

In general, dc breakdown should be high enough so as not to interfere with the normal operation of equipment to be protected. It should be low enough so that the gas tube arrester breakdown will occur before a low-frequency voltage can rise to destructive magnitudes.

The dc breakdown voltage for gas tubes covered by the scope of this guide can range from 75 V ±20% to 1200 V ±20%. The low end of the range of voltage breakdown is limited by the ionization potentials of gases used in the manufacturing of the tube. The high end is more flexible, capable of up to tens of thousands of volts depending on the application requirement.

6.3.2 Capacitance test

Capacitance of gas tube arresters installed on low-frequency lines is usually of small concern due to the inherent low-capacitance of the gas tube arresters. The capacitance of a two-electrode gas tube arrester is usually in the range of 0.5 pF to 5 pF. Considering the upper value of 5 pF and a line frequency of 1.0 MHz, the impedance between terminals is approximately 31.8 kΩ. Capacitance of gas tube arresters is usually constant over a wide range of frequencies. The unit-to-unit capacitance variation between gas tube arresters of the same type is usually quite small. Capacitance of gas tube arresters is normally so low that signal loss and unbalance are insignificant in most applications.

6.3.3 Insulation resistance test

The initial insulation resistance of gas tube arresters is in the order of thousands of megohms. During the field life of a gas tube arrester, the insulation resistance decreases due to the formation of internal and external leakage paths. A substantial decrease in insulation resistance could result in noisy conditions and ultimately in a loss of transmission or signaling. Unbalance caused by a substantial difference in insulation resistance to ground of gas tube arresters on each side of line could be a contributing factor in causing noise. The lowest tolerable insulation resistance depends on the system application.

Copyright © 2006 IEEE. All rights reserved.

Copyright The Institute of Electrical and Electronics Engineers, Inc.
Provided by IHS under license with IEEE
No reproduction or networking permitted without license from IHS
Not for Resale

6.3.4 Impulse breakdown voltage test

The impulse breakdown voltage characterizes the ability of a gas tube arrester to limit fast rising voltage transients. The breakdown voltage should be less, by a suitable margin, than the withstand ability of the component or circuit that is to be protected. The impulse breakdown voltage should not be set so low that the dc breakdown voltage, which would normally be lower, interferes with system operation.

Due to a time lag between the presence of voltage that is high enough to cause breakdown and actual ionization process, faster rates of rise cause higher breakdown voltages. Curves plotting breakdown voltages versus rates of rise are published by gas tube manufacturers. In the absence of special test requirements, the rates of rise should be one or more of the following: 100 V/μs, 500 V/μs, 1 kV/μs, 5 kV/μs, and 10 kV/μs. See Figure 3 of IEEE Std C62.31-1987 for typical test waveforms.

Impulse breakdown voltage for devices covered under the scope of this guide range from 250 V to greater than 1200 V. Impulse breakdown voltage is typically 500 V at the rate of rise of 100 V/μs and 900 V at the rate of rise of 10 kV/μs.

6.3.5 Maximum single impulse discharge current test

The maximum single impulse discharge current test is a measure of the capability of a gas tube arrester to withstand a single large surge. Nearby lightning strikes can produce such surges. IEEE Std C62.31-1987 specifies waveforms of 10/1000 μs and 8/20 μs as well as failure modes. This magnitude is determined by the possibility of exposure to a severe impulse. The test is of greatest importance in applications involving exposed facilities located in areas of high thunderstorm activity or high soil resistivity. The maximum single impulse current is mainly determined by factors such as the electrode area, the electrode material, the heat dissipation path, etc. Values for 8/20 current range from 5 kA to 100 kA. Typical values for this current are 20 kA for 8/20 current waves and 2 kA for 10/1000 current waves.

6.3.6 Impulse life test

One of the most important measures of the capability of gas tube arresters is the impulse life test. Table 1 of IEEE Std C62.31-1987 suggests waveforms and currents to be used. The individual application will determine the extent of life test requirements needed.

Applications in areas of high lightning incidence or severe exposure may justify the use of gas tube arresters with high-impulse life characteristics.

Lightning flash density maps (see Global Atmospherics [B12]) are published showing ground flashes per kilometer squared per year. From the severity and incidence of lightning, the type of facilities, the desired reliability of service, and the exposure to lightning, a determination can be made of the gas tube arrester's life requirements.

Although lightning occurs in multiple flashes, usually averaging two to six flashes within a few tenths of a second, a standardized life test method has been accepted. Test results can be used for comparing cost/performance trade-offs and to indicate the durability of gas tube arresters. Failure criteria for this test are defined in IEEE Std C62.31-1987.

The useful life of the gas tube arrester is ended when degradation results in interference with transmission or signaling, or when the breakdown voltage reaches a point where the gas tube arrester fails to protect.

6.3.7 AC discharge current test

The ability of a gas tube arrester used on communications lines to withstand an ac current is significant in applications where power contacts and power induction are factors. Experience has shown that induced currents are usually less than 5 A, but may be of very long duration. Power contact currents of hundreds of amperes are possible, but the high currents are usually interrupted in less than 5 s by disconnect devices.

Copyright © 2006 IEEE. All rights reserved.

Copyright The Institute of Electrical and Electronics Engineers, Inc.
Provided by IHS under license with IEEE
No reproduction or networking permitted without license from IHS
Not for Resale

6.3.8 Alternating follow current test

The alternating follow current test measures the ability of a gas tube arrester to extinguish under specified conditions. IEEE Std C62.31-1987 suggests voltages and frequency to be used. This ability is of particular interest for gas tube arresters used on circuits intended to carry ac power because it characterizes their ability to extinguish, thus restoring normal service, after the passage of a surge. During the time that conduction occurs, service is interrupted.

6.3.9 Holdover test

In applications where a dc voltage exists on a line, the holdover test is a measure of the ability of a gas tube arrester to extinguish after it is subjected to an impulse large enough to cause it to conduct. During the time that the gas tube arrester is in a holdover condition (that is, conducting), transmission and signaling are interrupted. Further, a potentially destructive condition is introduced, possibly causing overheating of the gas tube arrester. Holdover becomes increasingly probable as dc line voltages and available line current increases. The holdover of a gas tube arrester is strongly influenced by the external circuit in which it is operating. Significant circuit parameters, which may influence holdover, are open circuit voltage, short circuit current, source regulation characteristics and values of the reactive components.

6.3.10 Transition time test

Transition time is the time required for the voltage across a conducting gap to drop into the arc region after the gap initially begins to conduct. Indirectly, it is a measure of the energy dissipation of a gas tube arrester during breakdown. The faster the transition time, the less energy the tube is required to dissipate during the breakdown interval.

6.3.11 Impulse transverse voltage test

The impulse transverse voltage is the metallic voltage that appears across the line terminals of the gas tube arrester when a longitudinal voltage is impressed on each of the lines.

The impulse transverse voltage test is primarily intended to test gas tube arresters with three or more electrodes. In balanced communications or signaling circuits, two-electrode gas tube arresters can be used to protect each conductor of a pair. If one gas tube arrester breaks down and the other does not or is delayed, a metallic voltage results. This metallic (transverse, normal mode) voltage can cause equipment damage (see Figure 6-1, Figure 6-2, and Figure 6-3.). Gas tube arresters with three or more electrodes can be designed to reduce the metallic voltage. However, transverse voltages are unlikely to be eliminated completely, and the application should accommodate such circumstances.

Copyright © 2006 IEEE. All rights reserved.

Copyright The Institute of Electrical and Electronics Engineers, Inc.
Provided by IHS under license with IEEE
No reproduction or networking permitted without license from IHS
Not for Resale

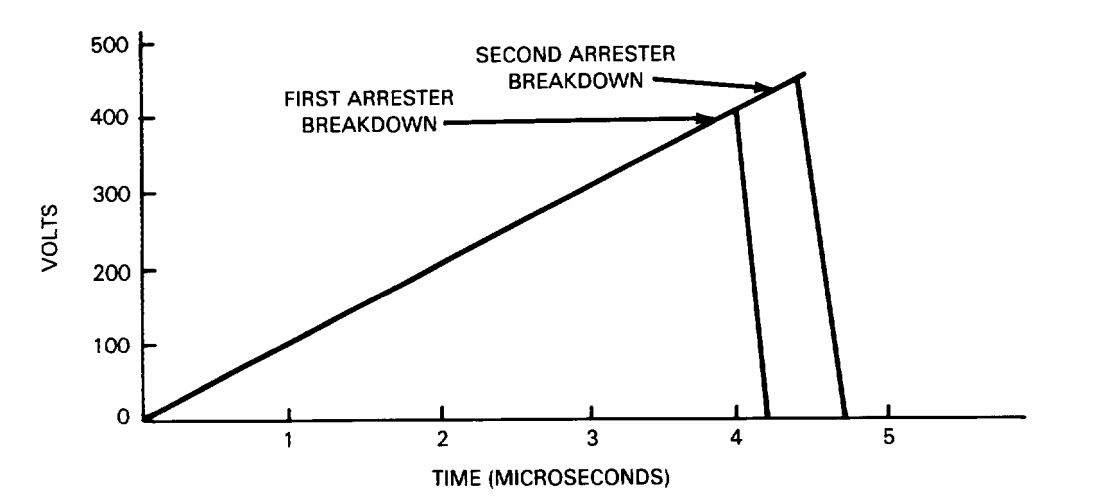

Figure 6-1—Simplified illustration of line-to-line voltage unbalance—line-to ground voltage A-G, B-G

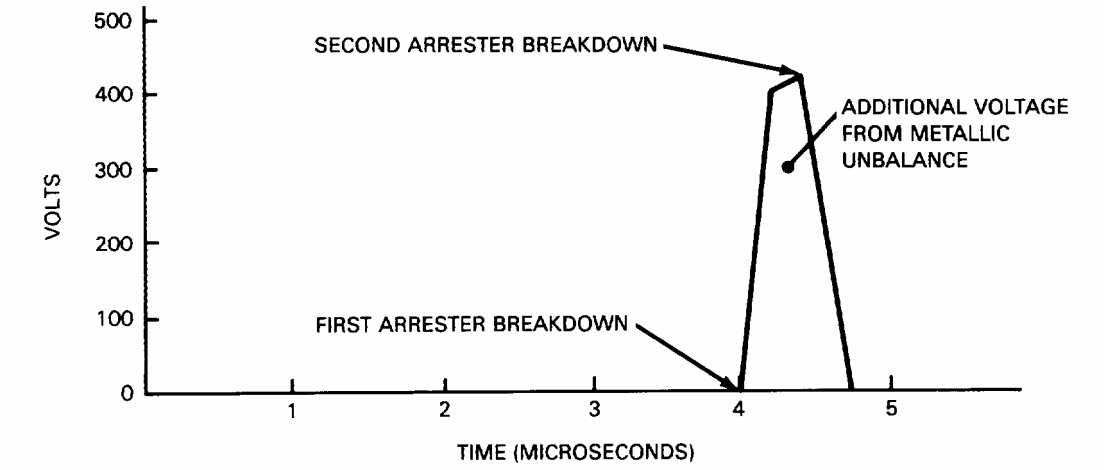

Figure 6-2—Simplified illustration of line-to-line voltage unbalance—line-to-line voltage A-B

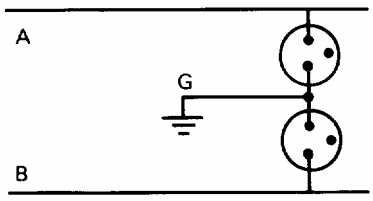

Figure 6-3—Simplified illustration of line-to-line voltage unbalance—schematic of arresters connected A-G, B-G

NOTE: Surges of equal rates of rise are simultaneously applied to line A and line B. After the first arrester breakdown occurs there is a time delay until the second arrester breakdown occurs, resulting in a metallic voltage.

Copyright © 2006 IEEE. All rights reserved.

Copyright The Institute of Electrical and Electronics Engineers, Inc.
Provided by IHS under license with IEEE
No reproduction or networking permitted without license from IHS
Not for Resale

6.3.12 AC transverse voltage test

The ac transverse voltage test is similar to the impulse transverse voltage test except that a 50 Hz or 60 Hz source is used. This test is primarily intended for gas tube arresters with three or more electrodes. It is a measure of the energy that is transferred to the circuit or component being protected under specific load and line conditions, where a balanced longitudinal 50 Hz or 60 Hz voltage is impressed on the line.

6.3.13 Voltampere characteristic test

The voltampere characteristic is portrayed as a graph and usually shown as a plot of current versus voltage. It includes dc breakdown, glow voltage, glow-to-arc transition current, arc voltage, and arc current (see Figure 5).

6.3.14 Crosstalk test

IEEE Std C62.31-1987 describes a method to measure crosstalk loss between vertically and horizontally adjacent pairs on multipair protector assemblies. Since crosstalk is a function of the wires, leads, and cable stubs rather than the gas tube arrester itself, the test is generally unnecessary in selecting a gas tube arrester for a specific application.

6.4 Application of gas tube surge arresters (telecommunications)

The application of gas tube surge arresters to limit voltages at the terminals of electrical apparatus requires the selection of a gas tube arrester with suitable characteristics, and then the proper physical arrangement of the gas tube arrester in the electrical circuit. It also requires the selection or design of equipment that will withstand the energy that bypasses the selected arresters in their circuit configuration. An overall economic choice of both equipment and arresters should be made.

The electrical configurations of the most common applications are illustrated in the matrix in Figure 7. The configurations have one or more signaling terminals and usually include a ground terminal. The one-port configuration may represent a communication line or terminating equipment for communication facilities. The two-port configuration may represent a communication line repeater. Figure 7a)'s arrangement in each configuration limits longitudinal (common mode) surge voltages. Figure 7b)'s arrangement uses multigap surge arresters to limit longitudinal voltages while also minimizing metallic (transverse mode) voltages. The multi-gap arresters may also afford a size reduction as compared to the single-gap arrangement. Figure 7-3c)'s arrangement limits transverse mode surge voltages, but does not provide protection against common mode surge voltages. An additional arrester (see Demircioglu et al 1978 [B5]) may be added to this last arrangement, connected between one of the terminals and ground, to provide longitudinal mode protection.

--`,,```,,,,````-`-`,,`,,`,`,,`---
Copyright © 2006 IEEE. All rights reserved.

Copyright The Institute of Electrical and Electronics Engineers, Inc.
Provided by IHS under license with IEEE
No reproduction or networking permitted without license from IHS
Not for Resale

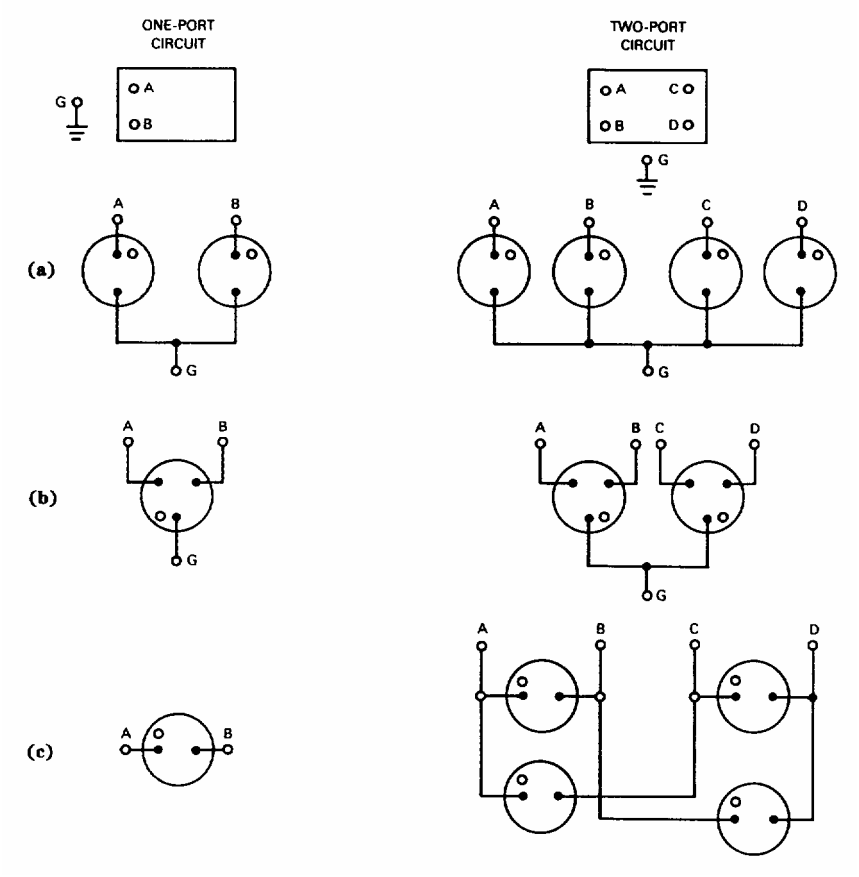

Figure 7—Typical arrangements of gas tube surge arresters

The application principles will be discussed in detail for the configuration consisting of two signaling terminals and a ground terminal (see Figure 8), the objective being to limit the magnitude of surge potentials that may occur between the two signaling terminals and between either terminal and ground.

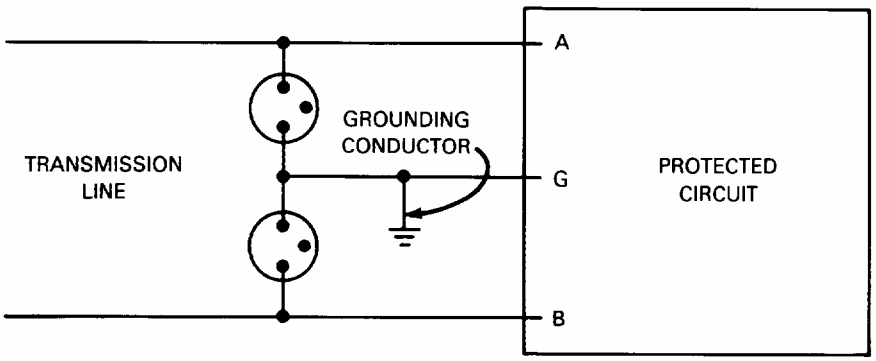

Figure 8—Protection of circuit composed of two signaling leads and a ground terminal

Copyright © 2006 IEEE. All rights reserved.

Copyright The Institute of Electrical and Electronics Engineers, Inc.
Provided by IHS under license with IEEE
No reproduction or networking permitted without license from IHS
Not for Resale

6.4.1 Operational compatibility

In the quiescent state, an unoperated gas tube surge arrester should not interfere with transmission of information, control, or test signals. Leakage resistance of the gas tube surge arrester, measured at the voltages applied by the system, should be sufficiently high to avoid significant insertion loss. The low-capacitance of gas tube surge arresters generally causes insignificant insertion loss as compared to the transmission line at the protected terminals. However, if capacitance is of concern (such as in high-frequency applications), its maximum permissible value should be specified at the frequency of the applied transmission signal.

Unwanted clipping of signals is avoided by specifying the minimum dc breakdown voltage to be greater than the largest signal level, including any superimposed dc bias or any acceptable induced ac interference voltage, at the protected terminals. Gas tube surge arresters do not incorporate a current-limiting element to extinguish follow currents after a surge has been conducted. Conduction is interrupted if the load line of the source intersects the voltampere characteristic of the off state after the surge has decayed (see Annex A). Extinguishing capability is established by testing for holdover with a test source having the equivalent load line of the actual source at the protected terminals. Since reactive components (that is, transmission line, connected apparatus) may effect extinguishing, they should be included in the holdover test circuit.

6.4.2 Voltage limiting

The gas tube surge arrester is intended to limit the magnitude of unwanted voltage transients to levels that are below the withstand threshold of apparatus being protected (with suitable margin for aging of the apparatus). Protection of the circuit shown in Figure 8 requires that the voltages between terminals A-G, B-G, and A-B all be limited. In many applications, surges are of like polarity with respect to ground, and the maximum voltage between terminals A-B does not exceed the gas tube arrester surge limiting voltage between A-G or B-G. Accordingly, two gas tube surge arresters, placed between A-G and B-G, are normally sufficient to protect all three terminals. If the application is such that metallic transients can occur without a longitudinal component, then the two-gas tube arrester arrangement will permit metallic voltages as high as the sum of the two limiting voltages. In this situation, a third gas tube arrester placed between terminals A-B may be necessary to limit metallic transients to lower values.

If protection against fast-rising transients is desired, the voltage rate-of-rise of the transients should be specified. If the rate of rise is not known, suggested values are 100 V/μs for lightning transients on metallic shielded communication or signaling lines and 500 V/μs on unshielded lines, 100 kV/μs for EMP, 1 kV/μs and 5 kV/μs for ac power switching transients. Protection against 50 Hz or 60 Hz overvoltages is usually provided by selecting the maximum dc breakdown voltage to equal the peak value of the tolerable ac overvoltage.

6.4.3 Failure mode

Since the failure mode of the gas tube surge arrester affects protection of terminal equipment, the preferred failure mode of the gas tube arrester should be specified. Gas tube arrester failure modes are of two types: those that may interfere with system operation, and those that do not. In the first category are the short-circuit failure mode, the low-breakdown voltage failure mode, and the low-insulation resistance failure mode. These failure modes are often detectable by the user of the protected system and are usually preferred where protection of people, property, or terminal equipment is paramount. In the second category is the high-breakdown voltage failure mode. This failure mode is not normally noticeable to the user (without special testing), and may be preferred where uninterrupted system operation is paramount.

Failure of a gas tube arrester may be caused by several mechanisms. Among them are mechanical shock, corrosion, hermetic seal failure, and repeatedly or excessively large surge operation. Each of these mechanisms may produce different failure modes in a given gas tube arrester, so that both the type of stress and the preferred failure mode should be considered.

Copyright © 2006 IEEE. All rights reserved.
Copyright The Institute of Electrical and Electronics Engineers, Inc.
Provided by IHS under license with IEEE
No reproduction or networking permitted without license from IHS
Not for Resale

6.4.4 Operations to failure

Repeated discharges of impulse and alternating currents eventually cause a gas tube surge arrester to degrade. This degradation causes disruption of transmission or loss of protection if one or more of the device characteristics (for example, insulation resistance, breakdown voltage) do not satisfy desired values. The number of impulse or ac discharge current operations that cause a device characteristic to fail specifications is a measure of gas tube arrester lifetime. Since in-service discharges are likely to be of widely different amplitudes and durations, discharge tests made in accordance with IEEE Std C62.31-1987, are a convenient approximation of actual service life conditions.

The required number of operations before failure depends upon the severity of the environment and the desired length of service. Since the lifetime of a gas tube arrester may depend on its mounting, and since many protectors contain mechanisms (internal, external, or both to the gas tube arrester) that conduct when the conducting capacity of the gas tube arrester has been exceeded, the gas tube arrester should be tested in its protector mounting.

Protectors that are applied to exterior transmission lines may be subjected to surges from lightning or from nearby power lines. Because of the many conductive paths that are present, lightning-caused surges are normally lower than the currents delivered by the flash from the thundercloud. Lines in areas of high thunderstorm activity and lines without a grounded metallic shield experience the greatest number of high-current lightning surges. Only a limited amount of surge current data for in-service facilities is available (see Klewe [B17] and Bell Communications Research 1987 [B19]). Peak values of these currents typically are less than 100 A, but may be higher on unshielded facilities (see Sunde 1968 [B33]). Discharge currents resulting from faults on 50 Hz or 60 Hz power lines are normally of short duration (less than 5 s) because of automatic disconnect devices on the power system.

However, high-impedance power faults may last indefinitely, actuating the heat-sensing mechanism in the protector, and permanently short-circuiting the gas tube arrester. Gas tube arresters on ac power service lines may be subjected to repeated short duration surges caused by lightning, operation of nearby electrical equipment, or power system switching transients (see Martzloff and Hahn 1970 [B28]).

6.4.5 Grounding and bonding

In Figure 8, the connection between the protector ground terminal and the local grounding electrode, known as the grounding conductor, shall be capable of conducting the sum of the currents of the two arresters, as well as from other paths. The grounding electrode is likely to be the ground for the neutral of a power system, a buried metallic water pipe, building steel, a ground-rod or mat, or a combination of these. In any case, the electrode establishes a local ground reference that is different in potential from a remote location in the earth. Nearby metallic systems should be connected to the same grounding electrode so that the potential difference to the electrode, rather than to remote earth, determines the difference in potential between nearby systems.

The impedance of the grounding conductor multiplied by the current conducted during a surge will determine the voltage difference between point G of Figure 8 and other systems connected to the same electrode. If the arresters operate, the difference in potential between terminals A-B-G will be the conducting voltage of the arresters, but all three terminals will be at an elevated potential with respect to the ground electrode as determined by the voltage drop in the grounding conductor. For example, if the grounding conductor is 9 m (30 ft) of 14 AWG copper wire the total resistance will be about 0.08 Ω and the inductance about 12 μH. If the total surge current in the two arresters is 200 A, with a rise time of 100 A per microsecond, the resistive component of voltage will be 16 V and the inductive, 1200 V.

The voltage appearing in the grounding conductor is minimized with short conductors. In the case of circuits that are bonded together, only that portion of the grounding conductor, which is not common to the protected circuits, contributes to the potential difference between circuits.

Copyright © 2006 IEEE. All rights reserved.

Copyright The Institute of Electrical and Electronics Engineers, Inc.
Provided by IHS under license with IEEE
No reproduction or networking permitted without license from IHS
Not for Resale

6.4.6 Location of arresters

Protectors equipped with two-electrode or three-electrode gas tube arresters are connected to the terminals to be protected, as in the configurations in Figure 7a) and Figure 7b). The physical location should minimize the effect of grounding conductor impedance.

CAUTION

Care should be exercised to avoid an inadvertent hazard to the building in which the protected equipment is located. Section 800-30 (b) of NFPA 70, 2005 Edition (NEC), requires that, where the protector is installed inside the building, it shall be located as close as practicable to the point at which the exposed conductors enter the building. Figure 9-1 illustrates the hazard that can result if this requirement in Section 800-30 (b) of NFPA 70, 2005 Edition (NEC) is violated. Sustained conduction of 50 Hz or 60 Hz current to the protector ground can overheat the interior wiring and cause a fire hazard.

Even when the primary protector is located at the building entrance, a low-longitudinal impedance to ground of the protected circuit can result in a hazard. The sustained conduction of 50 Hz or 60 Hz current to the protected circuit ground, due to a voltage that is insufficient to operate the primary protector, can be large enough to overheat the interior wiring or the protected circuit and again cause a fire hazard. If a secondary protector is installed, as illustrated in Figure 9-2, either to eliminate voltages in the grounding circuit, to induce overvoltages directly into the interior wiring, or to reduce overvoltages to a level lower than that which will cause the primary protector to operate, a fire hazard may still exist. The hazard may be reduced if the installation complies with Section 800-32 of NFPA 70, 2005 Edition (NEC) Section 800-32 requires that when a secondary protector is installed in series with the interior wiring between the primary protector and the protected circuit, it shall be listed for the purpose and shall incorporate a means for limiting the current, and thereby the heating, in the interior wiring. In addition, the impedance of the interior wiring between primary and secondary protectors and the current limiting means of the secondary protector may be sufficient to assure operation of the primary protector.

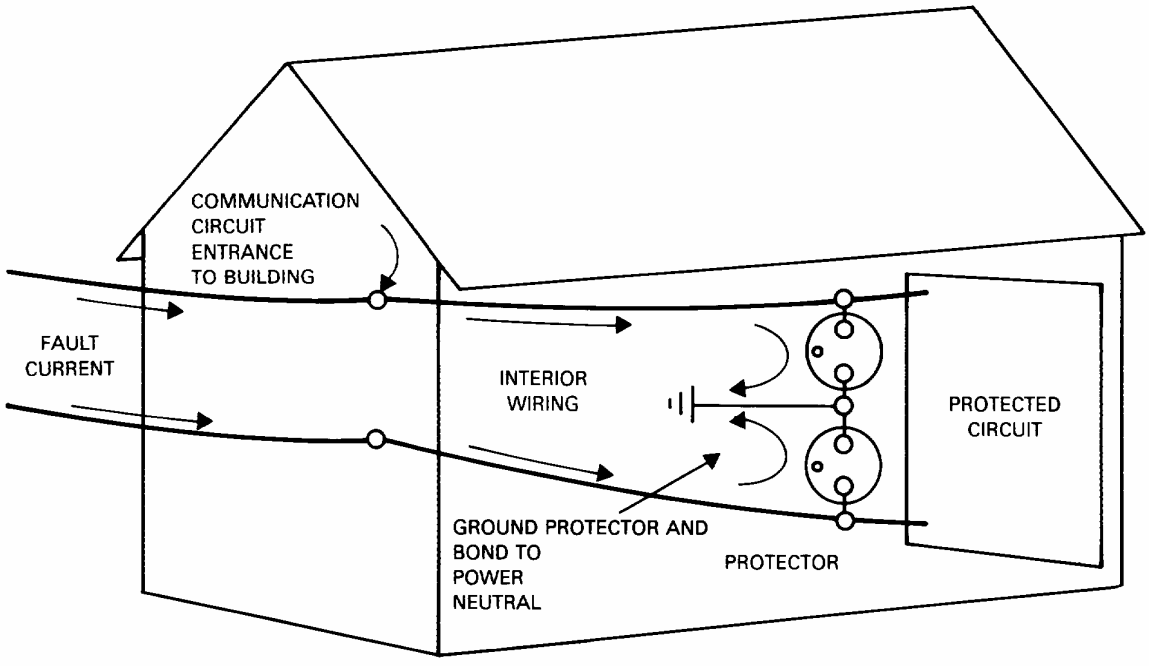

Figure 9-1—Possible overheating of interior wiring when protector is located remotely from building entrance

Copyright © 2006 IEEE. All rights reserved.

Copyright The Institute of Electrical and Electronics Engineers, Inc.
Provided by IHS under license with IEEE
No reproduction or networking permitted without license from IHS
Not for Resale

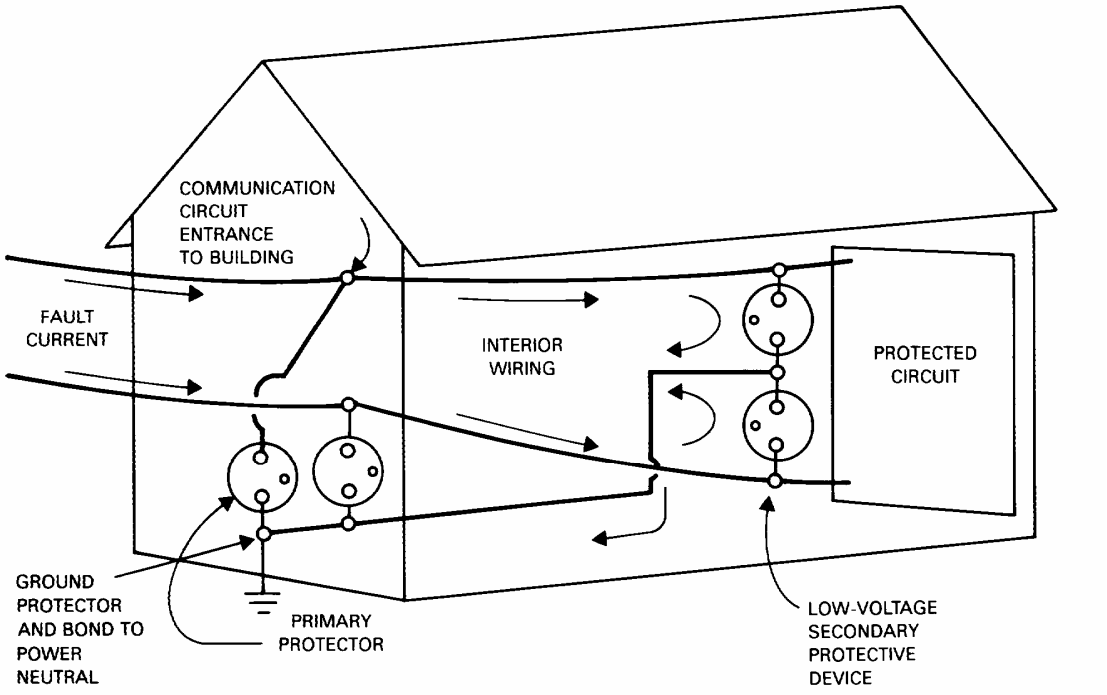

Figure 9-2—Possible overheating of interior wiring when secondary protector without current limiting is used

6.4.7 Codes and standards

Arresters used for the protection of communication circuits should be mounted in protectors that comply with the provision of NFPA 70, 2005 Edition (NEC), Article 800 and/or Accredited Standards Committee C2-2002, where these are applicable. Both of these standards address the requirement for the provision of protectors. In addition, NFPA 70, 2005 Edition (NEC) addresses the location and grounding requirements for protectors on communications circuits that are subject to contact by power conductors operating at voltages above 300 V to ground. Typical safety test requirements are described in UL 497 [B34] for communications circuit protectors and in UL 497A [B35] for secondary protectors.

7. Air gaps

This clause presents a description, theory of operation, test characteristics, and an application guide for component air gap arrester surge-protective devices.

Air gap surge arresters may generally be divided into two types: carbon electrode, which have for decades provided the principal primary protection for telecommunications; and backup air gap, which are used to avoid loss of protection in the event of venting to the atmosphere by a primary gas tube device.

7.1 Description

Carbon air gap arresters are used for the purpose of diverting damaging energy from equipment or cable and are usually connected between line conductors and ground.

A carbon air gap arrester consists of two carbon electrodes separated by an air gap, the dimensions of which establish the normal breakdown voltage. Electrode spacing is maintained by means of ceramic, glass, or other insulating materials. The electrodes can be fitted with a variety of terminations suitable for mounting on

Copyright © 2006 IEEE. All rights reserved.

Copyright The Institute of Electrical and Electronics Engineers, Inc.
Provided by IHS under license with IEEE
No reproduction or networking permitted without license from IHS
Not for Resale

circuit boards, clip terminals, sockets, or for incorporation in a protector. Figure 10 illustrates, in a simplified manner, the functional components of a commonly used two-electrode air gap arrester with its circuit symbol.

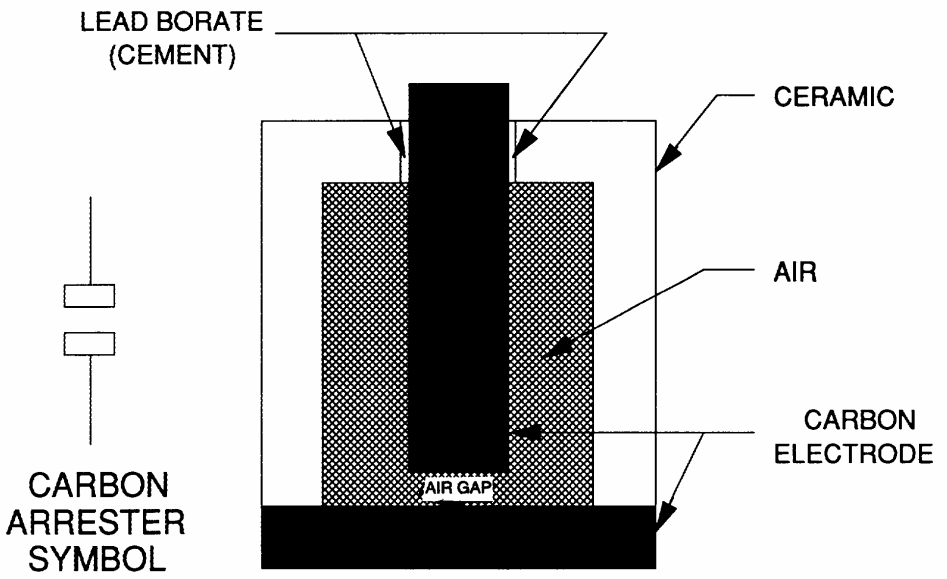

Figure 10—Cross-sectional view of the functional components of a two-electrode carbon arrester (simplified)

7.2 Theory of operation

A carbon air gap arrester electrode may be either an anode or cathode, depending on the polarity of the applied surge voltage. When the gap of a carbon air gap arrester is subjected to an increasing field intensity, it will breakdown at a voltage that is determined by the gap spacing, material, surface preparation, electrical configuration, atmospheric pressure, and the rate of rise of the voltage surge. The faster the rate of rise of the surge wavefront, the higher the impulse breakdown voltage.

In the unoperated state, the carbon air gap arrester has a very high resistance, in the order of several thousand megohms. In the operational state, that is, when breakdown of the carbon air gap arrester occurs, a high conductance state is produced, and the voltage across the air gap arrester is reduced to the arc mode voltage of about 30 V, regardless of the current flowing through the air gap arrester. The energy remaining in the disturbing transient is shunted and reflected away from the components to be protected.

For all practical purposes, the glow-mode characteristic exhibited by gas tube arresters does not exist for carbon air gaps arresters and is, therefore, not discussed.

The useful life of an air gap arrester is ended when degradation results in interference with transmission or signaling, such as from low-breakdown voltage or from excessive noise due to low-insulation resistance. The useful life is also ended when the breakdown voltage of the air gap arrester rises to a level where it fails to protect. Degradation may be caused by conduction of ac or impulse currents, by mechanical disturbances, or by climatic conditions.

7.3 Air gap arrester test characteristics

This subclause applies to all air-gap devices, except back-up air gaps, which are discussed in 7.5 of this guide. For further information about the following tests, see IEEE Std C62.32-1981.

Copyright © 2006 IEEE. All rights reserved.

Copyright The Institute of Electrical and Electronics Engineers, Inc.
Provided by IHS under license with IEEE
No reproduction or networking permitted without license from IHS
Not for Resale

7.3.1 DC breakdown voltage test

DC breakdown is a breakdown caused by a slowly rising voltage. Unless otherwise specified, a rate of rise not exceeding 1000 V/s is used for this test. Breakdown voltages of many air gap arresters will only vary slightly, when the rate of rise is less than 2 kV/s. To speed up life testing, a ramp speed of 2 kV/s is often used.

Low dc breakdown voltage is of concern where the crest value of the sum of the system operating voltages and any permissible low-frequency extraneous voltages (for example, induction from power lines) approach the lower limit dc breakdown value of the air gap arrester. Should this crest value exceed the dc breakdown voltage of the air gap arrester, causing it to spark over, interruption of the transmission or signaling on the circuit will occur.

During the life of air gap arresters, after being exposed to a number of transients and disturbances, the air gap arrester usually deteriorates in a manner whereby the dc breakdown voltage changes (typically the breakdown voltage is reduced). This may be accompanied by a degradation of other parameters, such as insulation resistance and impulse breakdown voltage.

If the dc breakdown voltage is too high, the air gap arrester will fail to break down and will not conduct a disturbing low-frequency current to ground, thus failing to protect the circuit. In general, dc breakdown should be high enough so as not to interfere with the normal operation of equipment that is to be protected. Moreover, it should be low enough so that the air gap arrester breakdown will occur before a low-frequency voltage can rise to destructive magnitudes.

The dc breakdown voltage for air gaps covered under the scope of this guide can range from 300 V ± 20% to 1200 V ± 20%. The low end of voltage breakdown of an air gap is limited by the nature of Paschen's breakdown law. The high end is more flexible, capable of up to tens of thousands of volts depending on the application requirement.

7.3.2 Capacitance test

Capacitance of air gap arresters installed on low-frequency lines is usually of small concern due to the inherent low-capacitance of the air gap arresters. The capacitance of a two-electrode air gap arrester is usually in the range of 0.5 pF to 5 pF. Considering the upper value of 5 pF and a line frequency of 1.0 MHz, the impedance between terminals is approximately 31.8 kΩ. Capacitance of air gap arresters is usually constant over a wide range of frequencies. The unit-to-unit capacitance variation between air gap arresters of the same type is usually quite small. Capacitance of air gap arresters is normally so low that signal loss and unbalance are insignificant in most applications.

7.3.3 Insulation resistance test

The initial insulation resistance of air gap arresters is in the order of thousands of megohms. During the field life of an air gap arrester, the insulation resistance decreases due to the formation of internal and external leakage paths. A substantial decrease in insulation resistance could result in noisy conditions and ultimately in a loss of transmission or signaling. Unbalance, caused by a substantial difference in insulation resistance to ground of air gap arresters on each side of the line, could be a contributing factor in causing noise. The lowest tolerable insulation resistance depends on the system application.

7.3.4 Impulse breakdown voltage test

The impulse breakdown voltage characterizes the ability of an air gap arrester to limit fast-rising voltage transients. The breakdown voltage should be less, by a suitable margin, than the withstand ability of the component or circuit that is to be protected. The selected impulse breakdown voltage should not be so low that the dc breakdown voltage, which would normally be lower, interferes with system operation.

Copyright © 2006 IEEE. All rights reserved.

Copyright The Institute of Electrical and Electronics Engineers, Inc.
Provided by IHS under license with IEEE
No reproduction or networking permitted without license from IHS
Not for Resale

Due to a time lag between the presence of voltage high enough to cause breakdown and the actual ionization process, faster rates of rise cause higher breakdown voltages. Curves plotting breakdown voltages versus rates of rise are published by air gap arrester manufacturers. In the absence of special test requirements, the rates of rise should be one or more of the following: 100 V/μs, 500 V/μs, 1 kV/μs, 5 kV/μs, and 10 kV/μs. See Figure 4 of IEEE Std C62.32-1981 for typical test waveforms.

The impulse breakdown voltage for devices covered under the scope of this guide range from 250 V to greater than 1200 V. Impulse breakdown voltage is typically 500 V at the rate of rise of 100 V/μs and 900 V at the rate of rise of 10 kV/μs.

7.3.5 Maximum single impulse discharge current test

The maximum single impulse discharge current test is a measure of the capability of an air gap arrester to withstand a single large surge. Nearby lightning strikes can produce such surges. IEEE Std C62.32-1981 specifies waveforms of 10/1000 and 8/20 as well as failure modes. The impulse magnitude is determined by the possibility of exposure to a severe impulse. The test is of greatest importance in applications involving exposed facilities located in areas of high thunderstorm activity or high soil resistivity.

The maximum single impulse current is mainly determined by factors such as the electrode area, the electrode material, the heat dissipation path, etc. Values for 8/20 current range from 5 kA to 100 kA. Typical values for this current are 20 kA for 8/20 current waves and 2 kA for 10/1000 current waves.

7.3.6 Impulse life test

The impulse life test measures the ability of an air gap arrester to survive repeated impulse current discharges. Although actual impulse currents on communication and signaling lines have complex waveshapes, standardized waveforms and test methods have been adopted as a reasonable laboratory simulation. The applications will determine the test parameters, including peak current and waveshape, number of applied impulses, and failure modes.

4.12.5 of IEEE Std C62.32-1981 suggests peak currents and current waveshapes to be used. Suggested failure modes for impulse life tests are listed in 4.12.4 of IEEE Std C62.32-1981.

In some cases, the life of an air gap arrester may be greater using higher test currents than when using lower currents. This may be due to a clearing action when using higher current values. Furthermore, the electrode surfaces of a carbon air gap may be affected by currents passed through the gap during measurement of insulation resistance. If a clearing source is to be used during impulse life testing, it should simulate a clearing source that is present in the application such as that described in 4.12.3 of IEEE Std C62.32-1981.

7.3.7 AC discharge current test

The ability of an air gap arrester used on communication lines to withstand an ac current is significant in applications where power contacts and power induction are factors. Experience has shown that induced currents are usually less than 5 A, but may be of very long duration, such as during a load unbalance on a power system. Power contact currents of hundreds of amperes are possible, but the high currents are usually interrupted in less than 5 s by power system overcurrent protective devices (circuit breakers, fuses, etc.).

7.3.8 Pulsed ac life test

This test, described in 4.14.1 of IEEE Std C62.32-1981, characterizes the ability of a device to conduct a series of 50 Hz or 60 Hz pulses that may occur on communication and signaling circuits exposed to power system induction. Experience shows that pulses of 1.0 A rms current for one second durations are reasonable.

Copyright © 2006 IEEE. All rights reserved.

Copyright The Institute of Electrical and Electronics Engineers, Inc.
Provided by IHS under license with IEEE
No reproduction or networking permitted without license from IHS
Not for Resale

7.3.9 Pulsed ac gap erosion test

Due to normal clearing action, considerable deterioration of device characteristics (such as leakage or low-breakdown voltage) may occur before a failed device is detected and replaced. Prior to replacement, arc erosion may cause widening of the gap to values allowing unacceptably high breakdown voltages. See 4.14.2 of IEEE Std C62.32-1981.

7.3.10 Alternating follow current test

The alternating follow current test measures the ability of an air gap arrester to extinguish under specified conditions. IEEE Std C62.32-1981 suggests voltages and frequency to be used. This ability is of particular interest when air gaps arresters are used on circuits intended to carry ac power; it characterizes their ability to extinguish, restoring normal service, after passage of a surge. During the time that conduction occurs, service is interrupted.

7.3.11 Holdover test

In applications where a dc voltage exists on a line, the holdover test is a measure of the ability of an air gap arrester to extinguish after it is subjected to an impulse large enough to cause it to conduct. During the time that the air gap arrester is in a holdover condition (that is, conducting), transmission and signaling are interrupted. Further, a potentially destructive condition is introduced, possibly causing overheating of the air gap arrester. Holdover becomes increasingly probable as the dc line voltage and available line current increase. The holdover of an air gap arrester is strongly influenced by the external circuit in that it is operating. Significant circuit parameters that may influence holdover are open circuit voltage, short circuit current, source regulation characteristics and values of reactive components.

7.4 Application of air gap surge arresters

The application of air gap surge arresters to limit voltages at the terminals of electrical apparatus requires the selection of an air gap arrester with suitable characteristics, and then the proper physical arrangement of the air gap arrester in the electrical circuit. It also requires the selection or design of equipment that will withstand the energy that bypasses the selected air gap arresters in their circuit configuration. An overall economic choice of both equipment and air gap arresters should be made.

The electrical configurations of the most common applications are illustrated in the matrix of Figure 7 (when the gas tube components are replaced with air gap devices). The configurations have one or more signaling terminals and usually include a ground terminal. The one-port configuration may represent a communication line or terminating equipment for communication facilities. The two-port configuration may represent a communication line repeater. Figure 7a)'s arrangement in each configuration limits longitudinal (common mode) surge voltages. Air gap arresters are not normally packaged in multielement configurations. Arrangement b) of Figure 7 thus would not be relevant. Figure 7c)'s arrangement limits transverse mode surge voltages, but does not provide protection against common-mode surge voltages. An additional air gap arrester (see Demircioglu et al 1978 [B5]) may be added to this last arrangement, connected between one of the terminals and ground, to provide longitudinal mode protection.

The application principles will be discussed in detail for the configuration consisting of two signaling terminals and a ground terminal as shown in Figure 8 (when the gas tube components are replaced with air gap devices), the objective being to limit the magnitude of surge potentials that may occur between the two signaling terminals and between either terminal or ground.

7.4.1 Operational compatibility

In the quiescent state an unoperated air gap surge arrester should not interfere with transmission of information, control, or test signals. Leakage resistance of the air gap surge arrester, measured at the voltages applied by the system, should be sufficiently high to avoid significant insertion loss. The low-capacitance of

Copyright © 2006 IEEE. All rights reserved.

Copyright The Institute of Electrical and Electronics Engineers, Inc.
Provided by IHS under license with IEEE
No reproduction or networking permitted without license from IHS
Not for Resale

air gaps surge arresters generally causes insignificant insertion loss as compared to the transmission line at the protected terminals. However, if capacitance is of concern, such as in high-frequency applications, its maximum permissible value should be specified at the frequency of the applied transmission signal.

Unwanted clipping of signals is avoided by specifying the minimum dc breakdown voltage to be greater than the largest signal level, including any superimposed dc bias or any acceptable induced ac interference voltage, at the protected terminals. Air gap surge arresters do not incorporate a current-limiting element to extinguish follow currents after a surge has been conducted. Conduction is interrupted if the load line of the source intersects the voltampere characteristic of the off state after the surge has decayed (see Annex B). Extinguishing capability is established by testing for holdover with a test source having the equivalent load line of the actual source at the protected terminals. Since reactive components (that is, transmission line, connected apparatus) may effect extinguishing, they should be included in the holdover test circuit.

7.4.2 Voltage limiting

The air gap surge arrester is intended to limit the magnitude of unwanted voltage transients to levels that are below the withstand threshold of apparatus being protected (with suitable margin for aging of the apparatus). Protection of the circuit of Figure 8 requires that the voltages between terminals A-G, B-G, and A-B all be limited. In many applications, surges are of like polarity with respect to ground, and the maximum voltage between terminals A-B does not exceed the air gap arrester surge limiting voltage between A-G or B-G. Accordingly, two surge air gap arresters, placed between A-G and B-G, are normally sufficient to protect all three terminals. If the application is such that metallic transients can occur without a longitudinal component, then the two-air gap arrester arrangement will permit metallic voltages as high as the sum of the two limiting voltages. In this situation, a third air gap arrester placed between terminals A-B may be necessary to limit metallic transients to lower values.

If protection against fast-rising transients is desired, the voltage rate of rise of the transients should be specified. If the rate-of-rise is not known, suggested values are 100 V/μs for lightning transients on metallic shielded communication or signaling lines, and 500 V/μs on unshielded lines; 100 kV/μs for EMP; 5 kV/μs for ac power switching transients. Protection against 50 Hz or 60 Hz overvoltages is usually provided by selecting the maximum dc breakdown voltage to equal the peak value of the tolerable ac overvoltage.

7.4.3 Failure mode

Since the failure mode of the air gap surge arrester affects protection of terminal equipment, the preferred failure mode of the air gap arrester should be specified. Air gap arrester failure modes are of two types: those that may interfere with system operation, and those that do not. In the first category are the short-circuit failure mode, the low-breakdown voltage failure mode, and the low-insulation resistance failure mode. These failure modes are often detectable by the user of the protected system and are usually preferred where protection of people, property, or terminal equipment is paramount. In the second category is the high-breakdown voltage failure mode. This failure mode is not normally noticeable to the user (without special testing), and may be preferred where uninterrupted system operation is paramount.

Failure of an air gap arrester may be caused by several mechanisms. Among them are mechanical shock, corrosion, and repeated or excessively large surge operation. Each of these mechanisms may produce different failure modes in a given air gap arrester, so that both the type of stress and the preferred failure mode should be considered. Air gap surge arresters usually fail in the low breakdown voltage failure mode.

7.4.4 Operations to failure

Repeated discharges of impulse and alternating currents eventually cause an air gap surge arrester to degrade. This degradation causes disruption of transmission or loss of protection if one or more of the device characteristics (for example, insulation resistance or breakdown voltage) do not satisfy desired values. The number of impulse or ac discharge current operations that cause a device characteristic to fail specifications is a measure of air gap arrester lifetime. Since in-service discharges are likely to be of widely different

Copyright © 2006 IEEE. All rights reserved.
Copyright The Institute of Electrical and Electronics Engineers, Inc.
Provided by IHS under license with IEEE
No reproduction or networking permitted without license from IHS
Not for Resale

amplitudes and durations, discharge tests made in accordance with IEEE Std C62.32-1981 are a convenient approximation of actual service life conditions.

The required number of operations before failure depends upon the severity of the environment and the desired length of service. Since the lifetime of an air gap arrester may depend on its mounting, and since many protectors contain mechanisms (internal, external, or both to the air gap arrester) that conduct when the conducting capacity of the air gap arrester has been exceeded, the air gap arrester should be tested in its protector mounting with normal orientation.

Protectors that are applied to exterior telecommunication lines may be subjected to surges from lightning or from exposure to nearby power lines. Because of the many conductive paths that are present, lightning-caused surges are normally lower than the currents delivered by the flash from a thundercloud. Lines in areas of high-thunderstorm activity and lines without a grounded metallic shield experience the greatest number of high-current lightning surges. Only a limited amount of surge current data for in-service facilities is available (see Klewe [B17] and Bell Communications Research 1987 [B19]). Peak values of these currents typically are less than 100 A, but may be higher on unshielded facilities (see Sunde 1968 [B33]). Discharge currents resulting from faults on 50 Hz or 60 Hz power lines are normally of short duration (less than 5 s) because of automatic disconnect devices on the power system.

However, high-impedance power faults may last long enough to actuate the heat-sensing mechanism in the protector, and permanently short-circuit the air gap arrester.

Air gap arresters on ac power service lines may be subjected to repeated short duration surges caused by either lightning, operation of nearby electrical equipment, or power system switching transients (see Martzloff and Hahn 1970 [B28]).

7.4.5 Grounding and bonding

In Figure 8, the connection between the protector ground terminal and the local grounding electrode, the grounding conductor, has to be capable of conducting the sum of the currents of the two arresters, as well as from other paths. The grounding electrode is likely to be the ground for the neutral of a power system, a buried metallic water pipe, building steel, a ground-rod or mat, or a combination of these. In any case, the electrode establishes a local ground reference that is different in potential from a remote location in the earth. Nearby metallic systems should be connected to the same grounding electrode so that the potential difference to the electrode, rather than to remote earth, determines the difference in potential between nearby systems. If separate electrodes are employed or required, they should be bonded together.

The impedance of the grounding conductor multiplied by the current conducted during a surge will determine the voltage difference between point G of Figure 8 and other systems connected to the same electrode. If the arresters operate, the difference in potential between terminals A-B-G will be the conducting voltage of the arresters, but all three terminals will be at an elevated potential with respect to the ground electrode as determined by the voltage drop in the grounding conductor. For example, if the grounding conductor is 9 m (30 ft) of 14 AWG copper wire the total resistance will be about 0.08 Ω and the inductance about 12 μH. If the total surge current in the two arresters is 200 A with a rise time of 100 A per microsecond, the resistive component of voltage will be 16 V and the inductive, 1200 V.

The voltage appearing in the grounding conductor is minimized with short conductors. In the case of circuits that are bonded together, only that portion of the grounding conductor that is not common to the protected circuits contributes to the potential difference between circuits.

7.4.6 Location of arresters

Protectors equipped with air gap arresters are connected to the terminals to be protected, as in the configurations in Figure 7a). The physical location should minimize the effect of grounding conductor impedance.

Copyright © 2006 IEEE. All rights reserved.

Copyright The Institute of Electrical and Electronics Engineers, Inc.
Provided by IHS under license with IEEE
No reproduction or networking permitted without license from IHS
Not for Resale

CAUTION

Care should be exercised to avoid an inadvertent hazard to the building in which the protected equipment is located. Section 800-30 (b) of NFPA 70, 2005 Edition (NEC) requires that, where the protector is installed inside the building, it shall be located as close as practicable to the point at which the exposed conductors enter the building. Figure 9-1 illustrates the hazard that can result if this requirement in Section 800-30 (b) of NFPA 70, 2005 Edition (NEC) is violated. Sustained conduction of 50 Hz or 60 Hz current to the protector ground can overheat the interior wiring and cause a fire hazard.

Even when the primary protector is located at the building entrance, a low-longitudinal impedance-to-ground of the protected circuit can result in a hazard. The sustained conduction of 50 Hz or 60 Hz current to the protected circuit ground, due to a voltage that is insufficient to operate the primary protector, can be large enough to overheat the interior wiring or the protected circuit and again cause a fire hazard. If a secondary protector is installed, as illustrated in Figure 9-2, either to eliminate voltages in the grounding circuit, to induce overvoltages directly into the interior wiring, or to reduce overvoltages to a level lower than that which will cause the primary protector to operate, a fire hazard may still exist. The hazard may be reduced if the installation complies with Section 800-32 of NFPA 70, 2005 Edition (NEC). Section 800-32 requires that when a secondary protector is installed in series with the interior wiring between the primary protector and the protected circuit, it shall be listed for the purpose and shall incorporate a means for limiting the current, and thereby the heating, in the interior wiring. In addition, the impedance of the interior wiring between primary and secondary protectors and the current limiting means of the secondary protector may be sufficient to assure operation of the primary protector.

7.4.7 Codes and standards

Arresters used for protection of communications circuits should be mounted in protectors that comply with the provisions in Article 800 of NFPA 70, 2005 Edition (NEC) and/or Accredited Standards Committee C2-2002, where these are applicable. Both of these standards address the requirement for the provision of protectors. In addition, NFPA 70, 2005 Edition (NEC) addresses the location and grounding requirements for protectors on communications circuits, which are subject to contact by power conductors operating at voltages above 300 V to ground. Typical safety test requirements are described in UL 497 [B34] for communications circuit protectors and in UL 497A [B35] for secondary protectors.

7.5 Backup air gap surge arresters

Because of their relatively narrow gaps (small spacing between electrodes), low-voltage air gaps arresters typically have the characteristic of not failing in a high-breakdown voltage mode. Instead, they usually fail in one of the following modes: shorted, low-insulation resistance, or low-breakdown voltage. This characteristic is especially true of carbon air gap arresters.

It is possible for certain types of air gap surge arresters to fail in the high-breakdown voltage mode. This is because they incorporate relatively wide gaps and are sealed at sub-atmospheric pressure. If for some reason they lose this seal (that is, become “vented”), air will enter causing the internal pressure to rise to 1 atm, resulting in an increase in breakdown voltage.

Although not required in all applications, a common method of protecting against a failure by high breakdown voltage due to gas tube venting is to use air gap arresters in parallel with backup air gaps. The backup air gap is designed to have a higher breakdown voltage than the sealed gas tube, but provide an acceptably low dc and impulse breakdown voltage if venting occurs. If the breakdown voltage levels of the two gaps are carefully controlled and are sufficiently separated, then the resulting arrester assembly will have gas tube performance with safety from high-breakdown failure mode due to venting. Since loss of the gas tube seal is a rare event, the only life test requirement on the backup air gap is that failure shall not occur in

Copyright © 2006 IEEE. All rights reserved.

Copyright The Institute of Electrical and Electronics Engineers, Inc.
Provided by IHS under license with IEEE
No reproduction or networking permitted without license from IHS
Not for Resale

the high-breakdown voltage failure mode. One example of the use of backup air gaps is found in protectors that incorporate them to meet the "vent test" requirements of UL 497 [B34].

8. Component MOV surge-protective devices

This clause presents a description, theory of operation, test characteristics, and an application guide for MOVs. This clause specifically discusses the zinc-oxide type of MOVs. Another type of varistor, based on silicon carbide material that typically might be used in conjunction with a series gap in ac line protection applications, has somewhat different characteristics and terminology. A third type of device often called a varistor is actually a multi-pellet silicon diode. The latter two types are not in the scope of this clause, although the principles for their application might be similar. For those other devices users should refer to their applicable standards.

8.1 Description

Typically, MOVs consist of a round disc-shaped body of sintered zinc oxide with suitable additives. Other types in use include rectangular and tubular shapes and multilayer structures. Varistors have metal particle electrodes consisting of a silver alloy or other metal. The electrodes may have been applied to the body by screening and sintering or by other processes depending on the metal used. Varistors also often have wire leads or some other type of termination that may have been soldered to the electrode.

The basic conduction mechanism of MOVs results from semiconductor junctions at the boundary of the zinc oxide grains formed during a sintering process. The varistor may be considered a multi-junction device with many grains acting in series-parallel combination between the terminals. A schematic cross-sectional view of a typical varistor is shown in Figure 11.

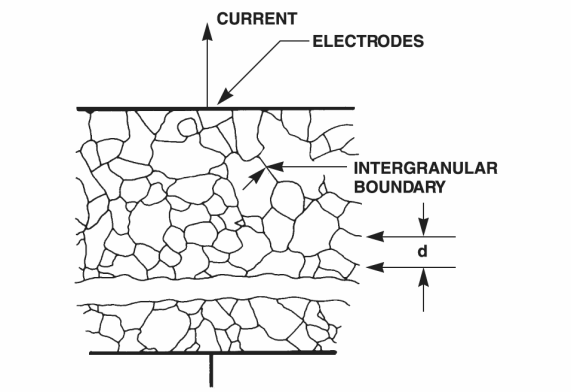

Figure 11—Schematic depiction of microstructure of MOV

NOTE— Reprinted with permission from Littelfuse Inc. (see Figure 3 in [B21])

Copyright © 2006 IEEE. All rights reserved.

Copyright The Institute of Electrical and Electronics Engineers, Inc.
Provided by IHS under license with IEEE
No reproduction or networking permitted without license from IHS
Not for Resale

8.2 Theory of operation

The term "varistor," a contraction of variable resistor, covers a class of two-terminal nonlinear devices exhibiting a monotonic increase in voltage with increasing current flow. These devices typically have symmetrical volt-ampere characteristics.

Varistors have the property of maintaining a relatively small voltage change across their terminals while the surge current flowing through them varies over several decades. This nonlinear action allows them to divert the current of a surge when connected in shunt across the line, and hold the voltage across the line to values that protect the equipment connected to that line. Since the voltage across the varistor is held at some level higher than the normal circuit voltage (but still protecting) while surge current flows, there will be energy deposited in the varistor during its surge diversion function.

As shown in Figure 11, the MOV material consists of zinc oxide grains separated by a thin intergranular material. Bismuth oxide and other metal oxides comprise the boundary between grains, and these form semiconducting junctions with the grains. A fundamental property of the material is that the voltage drop across a single interface between the grains is nearly constant, and is independent of the grain size. Figure 12 shows a typical V-I characteristic of a MOV in one direction of conduction, and the opposite direction would be similar.

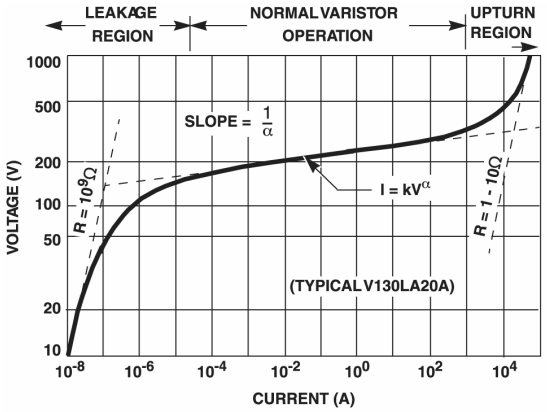

Figure 12—Typical varistor V-I curve plotted log-log scale

NOTE— Reprinted with permission from Littelfuse Inc. (see Figure 10 in [B21])

When it is exposed to surges, the zinc oxide material exhibits a "bulk action" characteristic permitting it to conduct large amounts of current without damage. The bulk action can be explained by imagining this material to be made up of an array of semiconducting junctions arranged electrically in series-parallel so that the surge current is shared among them. Because the grains themselves have finite resistance, they act as current limiting resistors. Consequently, current flow tends to be distributed throughout the bulk of the material in a manner that reduces current concentration at a single junction.

The electrical behavior of a varistor can be understood by reference to the V-I characteristic of Figure 12 and the equivalent circuit components of Figure 13. At low current levels, in the standby region, the parallel resistance R_{off}, is the prevailing component. In the protective operating region, the variable resistance R_x takes on continuously decreasing values, according to the power law relating current and voltage. At large currents, in the upturn region, the series resistance R_{on} becomes a significant part of the total device resistance, causing an upturn with the value of R_{on} as an asymptote. The parametric values given on Figure 12 and Figure 13 are shown for illustration purposes only.

Copyright © 2006 IEEE. All rights reserved.

Copyright The Institute of Electrical and Electronics Engineers, Inc.
Provided by IHS under license with IEEE
No reproduction or networking permitted without license from IHS
Not for Resale

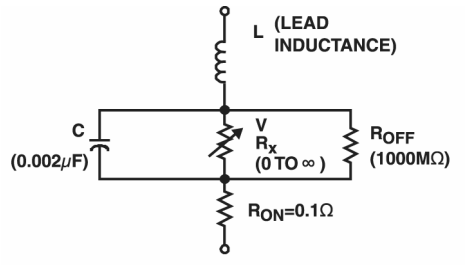

Figure 13—Varistor equivalent circuit model

NOTE—Reprinted with permission from Littelfuse Inc. (see Figure 11 in [B21])

Under ac or signal operating conditions as well as under surge conditions the reactive components of Figure 13 may significantly affect the behavior of the varistor. The parallel capacitance C can pass a current that may be larger than the dc leakage current. The series inductance L, resulting from the leads can increase the voltage appearing across the device terminals when it passes surge currents with steep wave fronts. This inductive voltage drop may appear as an overshoot on the voltage waveform and appear to be a delay in varistor response.

Ambient temperature, and/or the temperature rise caused in the device by operating conditions or by a surge, produces little effect on the clamping voltage. However, the leakage or standby current will increase with increasing temperature. Therefore, if conditions result in temperatures that may exceed the device rating, consideration will have to be given to thermal design in the application.

8.3 Varistor test characteristics

Refer to IEEE Std C62.33-1982 for varistor characteristics and ratings discussed in this guide. 8.2.1 through 8.2.5 of IEEE Std C62.33-1982 are detailed explanations of the tested characteristics and ratings that are the minimum necessary to use the device in most applications. 8.2.6 through 8.2.9 of IEEE Std C62.33-1982 explain some characteristics and ratings that might be useful in certain applications. 8.2.10 and above in IEEE Std C62.33-1982 discuss other characteristics and ratings that are sometimes used.

8.3.1 Clamping voltage test (V_c)

Clamping voltage, by definition, is the measured peak voltage across the device terminals, under standardized test conditions, when a current impulse of specified amplitude and waveshape is conducted through the varistor. It is an indication of the ability of the varistor to protect the circuit against voltage surges. To avoid waveshape dependent variations of test results an 8/20 current waveshape has been defined as the standard test impulse. See Figure 14 for typical clamping voltage response to this impulse.

Copyright © 2006 IEEE. All rights reserved.

Copyright The Institute of Electrical and Electronics Engineers, Inc.
Provided by IHS under license with IEEE
No reproduction or networking permitted without license from IHS
Not for Resale

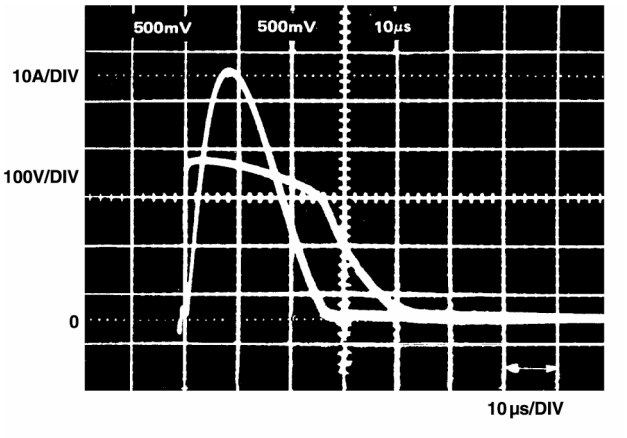

Figure 14—Typical clamping voltage response to 8/20 test current impulse

NOTE— Reprinted with permission from Littelfuse Inc. (see Figure 5A in [B22])

The I-V curve of Figure 15 illustrates the dependence of clamping voltage on surge current for the protective operating region. Also see Figure 12. Users should be cautioned that varistor specification tables typically show a clamping voltage (V_C) at only one specific test current.

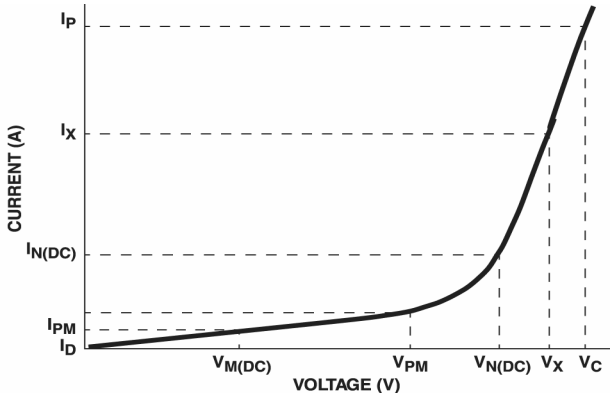

V_x = varistor voltage at current, I_x
$V_{n(dc)}$ = nominal varistor voltage at specified current, $I_{N(dc)}$
V_c = clamping voltage of varistor at peak current, I_p
V_{pm} = maximum rating of peak applied voltage for a specified waveform
$V_{m(dc)}$ = maximum rating of dc applied voltage

Figure 15—Illustration of I–V characteristics on linear scale

NOTE— Reprinted with permission from Littelfuse Inc. (see Figure 20 in [B21])

Users should refer to the V-I characteristic curves that should be a part of a varistor's complete specification. The V-I curves allow the user to determine the clamping voltage (V_c) to expect at various peak currents. See Figure 16 for examples. Values shown in Figure 12, Figure 13, Figure 14, Figure 15, and Figure 16 are for illustration only.

Copyright © 2006 IEEE. All rights reserved.

Copyright The Institute of Electrical and Electronics Engineers, Inc.
Provided by IHS under license with IEEE
No reproduction or networking permitted without license from IHS
Not for Resale

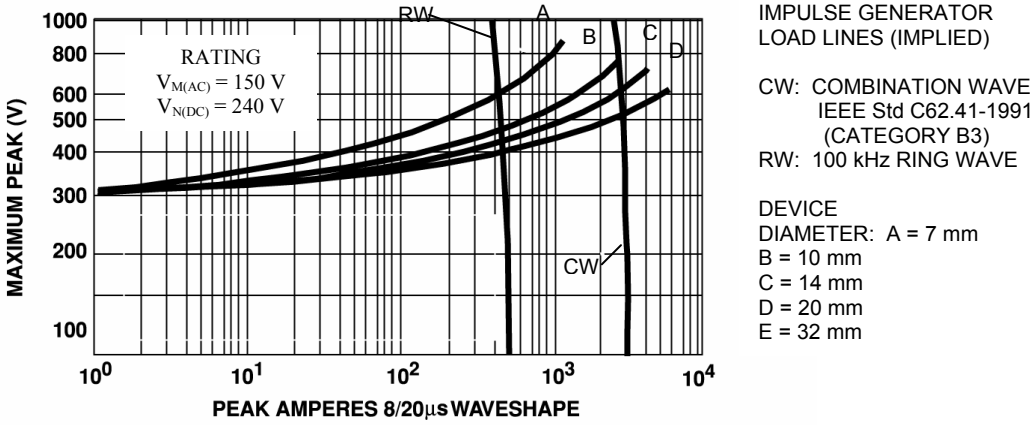

Figure 16—Examples of maximum clamping voltage V-I characteristics 8/20 μs test current wave shape

NOTE— Reprinted with permission from Littelfuse Inc. (see Figure 2A in [B23])

Clamping voltages can range from 17 V to 4000 V depending on the varistor voltage rating and disc size.

The user should be cautioned against selecting a varistor with a clamping voltage so low that it would begin to conduct excessively during high ac or dc power line conditions. This might then interfere with normal operation of the equipment being protected, overheat the varistor and shorten its life due to extended operation above rating. See 8.3.4 for further discussion about selecting a varistor with adequate rating.

A factor that can affect the varistor's measured peak voltage is lead and circuit inductance, due to L di/dt voltage. For further discussion, see 8.3.17, 8.3.18, and 8.3.1.

Users should be aware that the clamping voltage can increase slightly, typically less than 0.01 %/°C, with increasing operating temperature. Also, clamping voltage can change after being exposed to a number of high current transients, and the amount of change could be significant depending on the application. See 8.3.3.

8.3.2 Rated peak single pulse transient current test (I_{tm})

This is the maximum surge current, 8/20 waveshape, which a varistor is rated to withstand for a single surge. The rating provides a means of determining a varistor's capability to withstand, without failure, a surge that might be expected in an application environment. See 8.3.3 for a discussion of failure modes.

A varistor might withstand more than one surge at rated peak single pulse transient current. However, because of relatively high electrical stress, it would be expected to withstand only a limited number of these surges.

The energy deposited in a varistor could instantaneously raise its internal temperature by 60 °C or more. This will tend to increase the standby current and power dissipated by the varistor, until the varistor has cooled down. However, if the V-I characteristic were sufficiently shifted downward at the low current end, due to heating by the surge or varistor damage or both, then standby power dissipation could increase progressively causing failure due to thermal runaway. To verify that the varistor can recover from the effects of the rated current surge, rated voltage $V_{m(ac)}$ or $V_{m(dc)}$ shall be applied continuously for a minimum of 2 s before impulse and minimum of 30 s after the impulse.

The rated single pulse transient current can range from 8 A for small surface mount and leaded type varistors, to as high as 80 kA for large block type varistors.

Copyright © 2006 IEEE. All rights reserved.
--`,,```,,,,````-`-`,,`,,`,`,,`---
Copyright The Institute of Electrical and Electronics Engineers, Inc.
Provided by IHS under license with IEEE
No reproduction or networking permitted without license from IHS
Not for Resale

8.3.3 Lifetime rated pulse current tests

These multiple pulse ratings are the maximum number of pulses that a given design of varistor is rated to withstand. These ratings include different numbers of pulses for different pulse current levels. The ratings are based upon both 8/20 and 10/1000 waveshapes. The rated values can be obtained from manufacturer's specifications. The specifications typically contain pulse rating graphs which also include the rated current levels and number of pulses for a range of other impulse durations. Therefore, these ratings provide a means of comparing a varistor's capability against a specific number of surge events which are expected to occur in an application.

Because of the relatively high electrical stress, varistors should not be exposed to the rated current for routine acceptance test purposes. Rather, a statistically expressed sampling procedure should be used to test the acceptability of a given varistor design or lot.

When subjected to impulses in a unipolar direction the V-I characteristics of a varistor could become slightly polarized; i.e., asymmetrical. Typically, after unipolar stresses the voltage measured at low currents in the same direction as the electrical stress tends to be greater than that measured in the opposite direction. Therefore, shifts in the reverse direction V-I characteristic should be ignored unless they specifically affect the application.

Unless the application is known to consist of unipolar pulses, an alternating polarity test impulse is required by IEEE Std C62.33-1982 for three reasons. First, the random surges related to ac line applications are likely to occur in both positive and negative polarities. Second, an alternating polarity assures that degenerating stresses have been applied in both directions of conduction. Thirdly, device evaluation is simplified because the polarizing effects of non-uniformly applied stresses do not have to be considered. It should be apparent that a minimum of two surges, one in each direction, are needed to fulfill the conditions.

8.3.4 Rated RMS voltage test [$V_{(ac)}$], rated DC voltage tests [$V_{m(dc)}$]

These are the maximum designated values of power system voltage that may be applied continuously between the terminals of the device. These voltage ratings are based on the limitation of device life, as described in 8.3.3, for the maximum ambient temperature at which the devices are rated to operate.

These ratings are established by an evaluation procedure taking into consideration the desired device life, anticipated ambient temperature, incidence of high energy pulses, and selection of the end-of-life (failure) criteria. These considerations are within the realm of the manufacturer's and user's reliability assurance function. Users also should be aware that device life tends to follow an Arrhenius model in which typical life expectancy reduces as ambient temperature increases. See Figure 17 for an example.

Copyright © 2006 IEEE. All rights reserved.

Copyright The Institute of Electrical and Electronics Engineers, Inc.
Provided by IHS under license with IEEE
No reproduction or networking permitted without license from IHS
Not for Resale

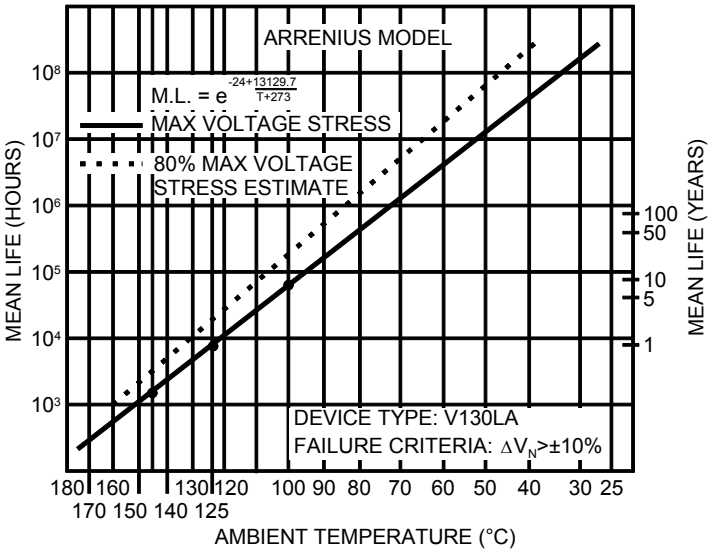

Figure 17—Example of Arrhenius Model of varistor mean life vs. temperature

Users are cautioned against selecting devices with inadequate voltage ratings. For example, in seeking a low clamping voltage a user, at first glance, might look for the type rated closest to the nominal voltage of the power system. However, proper allowance should be made for the possibility of device degradation and higher system voltages due to voltage regulation tolerances or, worse, due to temporary fault conditions such as those related to equipment failure or the effects of severe weather. Because of the high degree of nonlinearity of these surge-protective devices, a relatively small percentage of steady-state over-voltage can result in a relatively high increase in standby current conducted through them in turn leading to overheating and premature failure. In the absence of specific requirements, it is recommended that device ratings preferably should have margins of 20% or more above nominal ac power system voltages.

The rated continuous RMS voltage range for varistors covered under the scope of this guide starts at 3 V for small surface mount types to 1000 V for large leaded disc and block types.

8.3.5 DC standby current test (I_d)

The dc standby current is the current conducted by a varistor from the power source. The important consideration is that the self heating of the varistor should not be significant compared to its rated transient average power dissipation, P_t (see 8.3.11 for definition). Standby current by definition is measured with rated dc voltage $V_{m(dc)}$ applied. Values of $V_{m(dc)}$ can be obtained from manufacturer's specifications, and should not be exceeded. Users should design with adequate derating margin to allow for power source voltage variations.

Users can estimate typical standby current. For example, consider a varistor with V-I characteristics as illustrated in Figure 12. If the nominal power source voltage were 140 V dc, then the current drain would be about 20 μA. If the power source voltage increased to 154 V under high line conditions, then the typical standby current would increase to about 50 μA. The system power drains under these two conditions would be about 2.8 mW and 7.7 mW respectively, small values compared to a P_t rating of about 1 W, and not enough to elevate device temperature. Typical values for DC Standby current ranges from 0.5 μA to <100 μA for disc type varistors and 0.5 μA to <200 μA for large block type varistors.

Users can estimate the effects of temperature on standby current. Figure 18 illustrates the typical temperature coefficient of voltage for varistors shown in Figure 12. For the example above, the varistor voltage characteristic would be expected to decrease at a rate of about 0.15 %/°C with increasing temperature. If the ambient temperature were to increase to 60 °C above room value, the varistor voltage characteristic would

Copyright © 2006 IEEE. All rights reserved.

Copyright The Institute of Electrical and Electronics Engineers, Inc.
Provided by IHS under license with IEEE
No reproduction or networking permitted without license from IHS
Not for Resale

shift downward by about 9.4%. Therefore, the characteristic point, which was 154 V at 25 °C, would become about 140 V at 85 °C, and typical standby current would increase from about 20 μA to 50 μA.

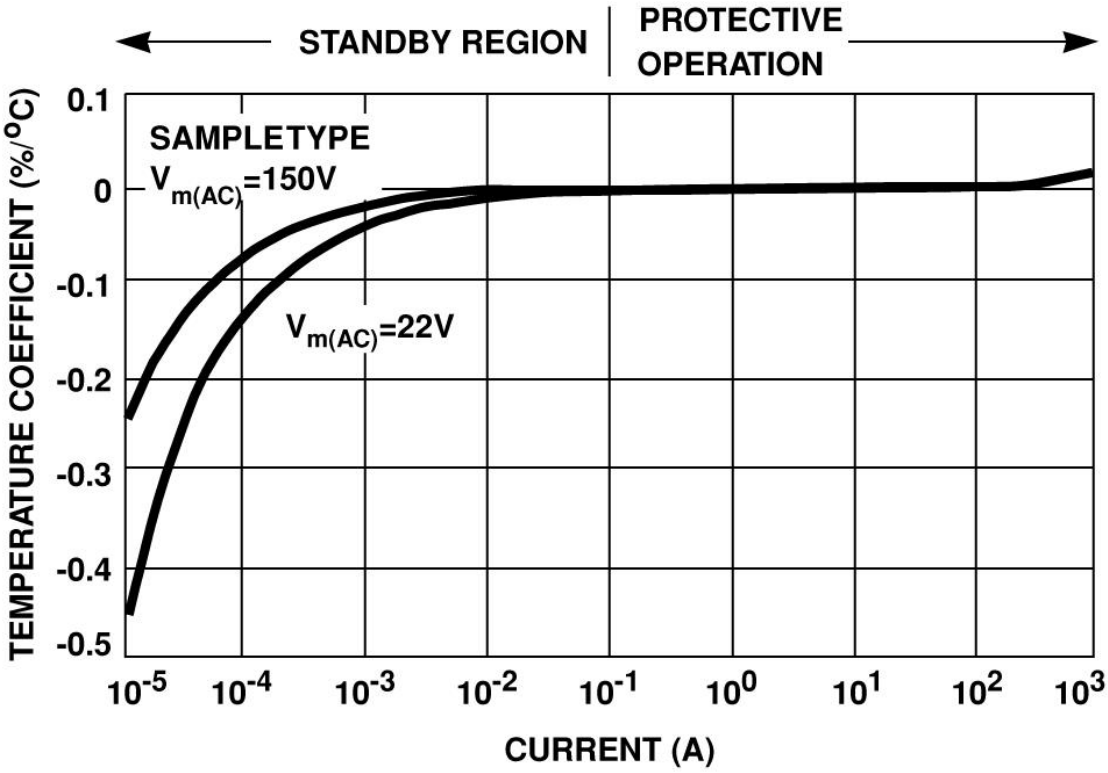

Figure 18—Typical temperature coefficient of voltage versus current, 14 mm size, −55°C to 125°C

NOTE— Reprinted with permission from Littelfuse Inc. (see Figure 14 in [B21])

The standby current of a varistor is subject to change over operating life. On typical specimens the measured value has been observed to be stable or even to decrease somewhat during the initial period of service. With an accumulation of stresses over time standby current may increase significantly, due to the V-I characteristic shifting in the leakage region similarly to the effects of increased ambient temperature. This could eventually lead to failure in the degradation mode, or to even failure by thermal runaway (see 8.3.3 for failure modes).

However, there is no single value that can determine the standby current limit appropriate for all applications; but rather an evaluation process taking into consideration the desired device life, anticipated ambient temperature, incidence of high energy pulses, and selection of the end-of-life (failure) criteria. These considerations are within the realm of the manufacturer's and user's component engineering functions.

The relationship between standby current and nonlinear exponent (α) (see 8.3.14) can be described with the aid of Figure 12. In the clamping operation region where nonlinear exponent is high, and the V-I characteristic curve is relatively flat, relatively small changes in applied power source voltage would result in relatively large increases in standby current. Manufacturers' specifications, however, are designed to keep continuous operation nearer to the leakage region where standby current is less sensitive to applied voltage changes. Therefore, those specifications should be adhered to.

Copyright © 2006 IEEE. All rights reserved.

Copyright The Institute of Electrical and Electronics Engineers, Inc.
Provided by IHS under license with IEEE
No reproduction or networking permitted without license from IHS
Not for Resale

8.3.6 Nominal varistor voltage test [$V_{n(dc)}$]

The nominal varistor voltage is a test characteristic that is commonly used to classify varistors by type. A test current of 1 mA is the value most frequently used, although values of 0.1 mA and 10 mA also are used in some manufacturers' specifications for some types. These test currents are relatively low and are compatible with many models of commercially available automatic test equipment used by the electronics industry. Therefore, the nominal varistor voltage fulfills the role of a varistor characteristic convenient for both manufacturers and users to measure.

As evident from Figure 12, the test current used for this characteristic lies in the highly nonlinear region. Hence, the nominal varistor voltage is predictive of the clamping voltage of varistors of given design. Also, because the test current for this characteristic lies in the lower end of the nonlinear region, as shown in Figure 15, it is predictive of varistor standby current, power dissipation, and ability to stand off rated voltages. Therefore, if the quality control functions of the manufacturer and the user verify that a given varistor piece has been correctly classified by type according to its nominal varistor voltage, then there is confidence that it can perform as intended in service.

For compatibility with automatic test equipment most manufacturers specify a dc current for nominal varistor voltage. Users should be aware that if an ac current source is used, such as on a curve tracer instrument, the voltage measured could be up to 5% higher. A similar difference can occur if automatic test equipment does not allow sufficient time for the measurement. About 5 ms may be needed for the voltage to stabilize within 1%. To allow adequate range for normal variations in manufacturing, varistor are typically classified into type tolerance ranges of about ±10%.

Nominal varistor voltage at 1 mA can range from 3.5 V for low operating voltage types to 1800 V or higher for high operating voltage types.

8.3.7 Rated recurrent peak voltage test (V_{pm})

This is the maximum designated value of a repetitive nonsinusoidal power source voltage of specified waveshape that may be applied continuously between the terminals of the device. This rating is established by an evaluation procedure as described in 8.3.4. Device ratings should have appropriate margin above the nominal level of the repetitive peak voltage. This rating does not include repetitive current pulses, such as produced by commutating of circuit loads, which might exceed lifetime rated pulse current values. See 8.3.3.

8.3.8 Capacitance test

Since an MOV basically consists of a dielectric sandwiched between two electrodes, it has capacitance, the value of which is directly proportional to its area and inversely proportional to its thickness.

When a varistor is applied to a dc circuit, the capacitance of the device is of little concern. When applied to ac circuits, however, especially higher frequency communications circuits, consideration must be given to the potentially unwanted effects that capacitance may have on the normal circuit operation. The leakage currents caused by the capacitive reactance XC = 1/ωc may result in undesirable circuit loading, signal degradation and phase shift.

The capacitance of a given varistor is known to decrease with frequency. Therefore, it is advisable to measure the capacitance at or close to the actual frequency of application.

When measured at a fixed frequency, the capacitance of a varistor shows little change with increasing bias voltage until the nominal varistor voltage (V_n) is approached, at which point the capacitance suddenly decreases. The capacitance of varistors is relatively stable with temperature and typically does not vary by more than ±20% from −40 °C to +125 °C.

Typical capacitance values for varistors can range from 3 pF to 30 000 pF depending upon RMS operating voltage and varistor disc size.

Copyright © 2006 IEEE. All rights reserved.

Copyright The Institute of Electrical and Electronics Engineers, Inc.
Provided by IHS under license with IEEE
No reproduction or networking permitted without license from IHS
Not for Resale

8.3.9 AC standby power test (P_d)

AC standby power is the power dissipated in a varistor when it is connected to an ac power source. The varistor current consists of both nonlinear resistive and capacitive components. The power dissipated is the sum of the two current phasors multiplied by the applied voltage and the cosine of the phase angle between the resultant current and the applied voltage. Measurements of ac standby power must be performed with a proper rms wattmeter because the resultant current is not sinusoidal.

The magnitude of the power dissipated is affected by the applied voltage amplitude, the ambient temperature and the frequency of the ac voltage. Figure 19 illustrates the standby power characteristics of a typical 20 mm diameter varistor intended for service on 120 V nominal voltage ac mains. The effects are shown of increasing or decreasing the applied voltage by 10% from the rated value V_m(ac), by increasing the temperature from room ambient 25 °C to 50 °C and 85 °C, and by increasing the frequency from 60 Hz to 400 Hz. The affects of voltage and temperature variations on the dc standby power are shown also for comparison.

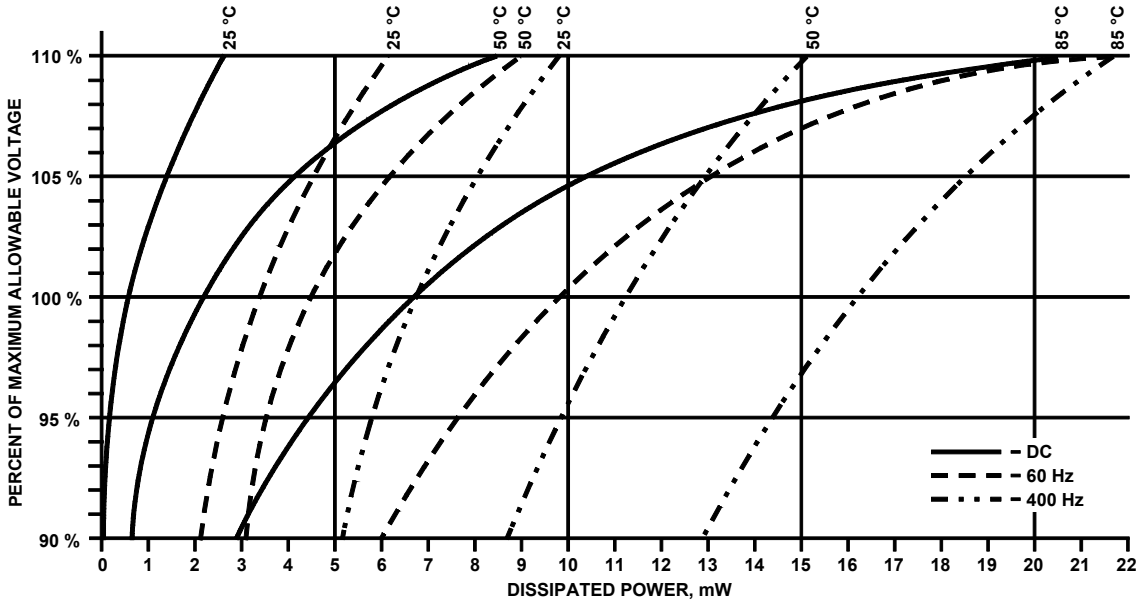

Figure 19— Short term effect of temperature, frequency, and voltage on standby power of a typical 20 mm varistor

Users are cautioned against selecting devices with inadequate voltage ratings. The V-I characteristics of varistors are highly nonlinear, and the standby power dissipation increases rapidly as voltage increases. The margin between device rating and the nominal power system voltage should not be compromised. In the absence of specific requirements, it is recommended that device ratings preferably should have margins of 20% or more above nominal ac power system voltages. Also see 8.3.4.

8.3.10 Rated transient energy (W_t)

Users should be aware that energy rating can be misleading as an indicator of the comparative merit of different varistor designs. The energy deposited in a varistor by a transient current source depends on the varistor clamping voltage. Therefore, a lower energy rating does not necessarily mean a lower capability of survival in the transient environment. Instead, the single and lifetime pulse current ratings are the appropriate tests of varistor surge withstand capability. In the absence of special requirements, energy ratings are recommended for use only as supplements to the predominant current ratings, and for application problems that are more conveniently treated in terms of energy.

Copyright © 2006 IEEE. All rights reserved.
--`,,```,,,,````-`-`,,`,,`,`,,`---
Copyright The Institute of Electrical and Electronics Engineers, Inc.
Provided by IHS under license with IEEE
No reproduction or networking permitted without license from IHS
Not for Resale

A single pulse energy rating can be established, from the data collected in the rated peak current tests, using the same statistical methods for lot acceptance. For multiple pulses, where aging of the varistor is a parameter to be considered, a pulse lifetime factor can be derived. For practical purposes, the same factor used in current ratings, while not theoretically equivalent for the energy, can be applied to the single pulse energy rating for deriving the multiple pulse energy rating.

Users should be cautioned that the source energy and the energy deposited in the surge-protective device generally are not the same. This is because the flow of surge current will deposit part of the surge energy in the series impedance of the surge source itself. As an extreme example consider the case of a protector that is effectively a short circuit. In that case the surge energy would be deposited entirely in the source impedance.

8.3.11 Rated transient average power dissipation [$P_{t(AV)}$]

The rated transient average power dissipation of a varistor is specified by the manufacturer, in order to limit device temperatures for reliable long life, taking into consideration three parameters:

a) Input average energy deposited in the material by repetitive transients.

b) Input power dissipation associated with standby current at the operating temperature (normally a small factor of the total energy level).

c) Output energy transferred to the environment by leads, or heat sink mounting, or both, as recommended by the manufacturer.

For stable operation of the varistor, the two inputs, item a) and item b), will be lower than the output capability of item c).. The latter may be influenced by the specific mounting applied by the user.

8.3.12 Varistor voltage (V_x)

The symbol V_x is frequently used to define the varistor voltage measured at a specified current of value x; e.g., V_1 would be the voltage measured at a current of 1 A.

8.3.13 Voltage clamping ratio [$V_c/V_{m(ac)}$, $V_c/V_{m(dc)}$]

This ratio is a value obtained by dividing clamping voltage by the maximum rated continuous voltage. The value will depend on the test current at which clamping voltage is measured and upon the units in which maximum rated continuous voltage is measured. For example, $V_{m(dc)}$ typically will be greater than $V_{m(ac)}$ resulting in a lower ratio. If the peak voltage of the rated ac voltage were used as the divisor, then an even lower ratio could be obtained. See Figure 15.

Users are cautioned against being misinformed by elusively defined figure-of-merit ratios. In making comparisons between products, the user should take care to see that similar definitions and test conditions are used. The surest course is to compare the maximum clamping voltages, for a specified peak test current and waveform, between parts of similar maximum rated voltage, $V_{m(ac)}$ or $V_{m(dc)}$.

Users are cautioned against selecting devices with inadequate voltage rating. Because clamping ratios are similar for closely related products, it is obvious that lower clamping voltages can be obtained at the expense of the margin between the maximum rated continuous voltage of the device and nominal power system voltage. However, injudicious compromises should be avoided. In the absence of specific requirements, it is recommended that these margins preferably should be 20% or more. See also 8.3.4.

Copyright © 2006 IEEE. All rights reserved.

Copyright The Institute of Electrical and Electronics Engineers, Inc.
Provided by IHS under license with IEEE
No reproduction or networking permitted without license from IHS
Not for Resale

8.3.14 Nonlinear exponent (α)

The nonlinear exponent (α) is a measure of the degree of varistor nonlinearity in the power law model $I = kV^{\alpha}$ where k is a device constant. The fit of this model can hold relatively well over a few decades of current range that includes the point I = 1 mA (see Figure 12). As currents approach or exceed about 100 A, the model tends to lose accuracy because of the effects of voltage developed across the internal bulk resistance. However, it serves to illustrate that relatively small increases in power system voltage can cause disproportionately larger increases in standby current and power dissipation. Devices should be selected with adequate margin of maximum rated continuous voltage (see 8.3.4).

Because varistors are conventionally tested using current stimuli, and with maximum clamping voltage as the dependent variable of interest, a more useful form of the model might be $V = kI^{\beta} + R_{on}I$ where $\beta = 1/\alpha$ and R_{on} is the internal bulk resistance of the varistor. This applies to typical cases where reactive components are small and look resistive. For a representative varistor type of 14 mm nominal diameter intended for application across 120 V ac power systems, the parametric values would be on the order of k = 350 Ω, $\beta = 0.033$ and $R_{on} < 0.1$ Ω.

Users should note that manufacturers graphical V-I curves are the definitive specifications of maximum clamping voltage. In most cases they also may be more convenient for protection design solutions than mathematical models.

8.3.15 Dynamic impedance (Z_x)

By the definition $Z_x = dV_x/dI_x$, this is the dynamic impedance presented by the device to small changes of voltage about an operating point. This characteristic is commonly specified for zener diodes used in voltage reference or stabilization applications. For surge suppression applications, the maximum clamping voltage specifications of the surge-protective device are instead recommended to the user.

The relationship of dynamic impedance to clamping voltage can be demonstrated by applying the definition above to the power law plus resistance equation model of clamping voltage. See paragraph 2 of 8.3.14. By performing the calculus operations it can be shown that $Z_x = \beta V/I + R_{on} = V/I\alpha + R_{on}$. If interpreted in terms of the equivalent circuit model of Figure 13, the exponents α or β describe the nonlinearity of the element R_x where $R_x = V/I\alpha = \beta V/I$. As the peak surge current I increases the value of R_x diminishes toward zero, so that the value of Z_x asymptotically approaches R_{on}. The dynamic impedance of typical varistors is illustrated in Figure 20.

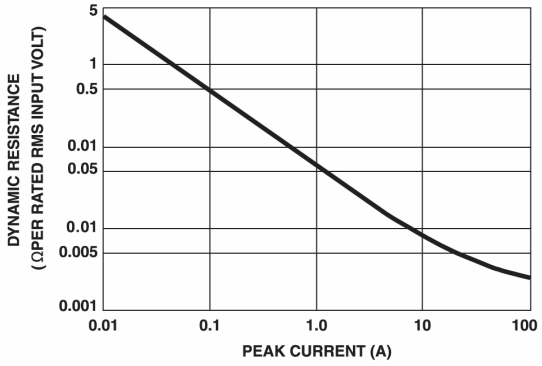

Figure 20— Dynamic Impedance Z_X of a typical varistor

NOTE— Reprinted with permission from Littelfuse Inc. (See Figure 16B in [B21])

Copyright © 2006 IEEE. All rights reserved.

Copyright The Institute of Electrical and Electronics Engineers, Inc.
Provided by IHS under license with IEEE
No reproduction or networking permitted without license from IHS
Not for Resale

8.3.16 Resistance (R_x)

By definition this characteristic is the instantaneous resistance to surge current presented by the varistor, $R_x = V_x/I_x$. It is of no value in determining the protective level provided by a varistor, because the clamping voltage characteristic is a more accurate and convenient means of finding that level. However, because a surge-protective device acts to discharge the source of a surge, the resistance can affect the time duration of the surge. In general, the open circuit voltage waveform at the output of a capacitance discharge surge generator will be longer in time duration than the short circuit impulse duration. Therefore, the effective resistance presented by a varistor may be useful to know in designing and predicting the decay characteristics of surge test circuits.

8.3.17 Voltage overshoot (V_{os})

Voltage overshoot is primarily attributable to the magnetic field established around the current-carrying leads of the device, which induces a voltage in the loop formed by the device leads and the protected circuit. See Figure 21. Under conditions of steep front current impulses at high amplitudes, measurement of the clamping voltage across a lead-mounted varistor can indicate values exceeding the levels observed with the standard 8/20 waveform. This higher voltage is referred to as overshoot.

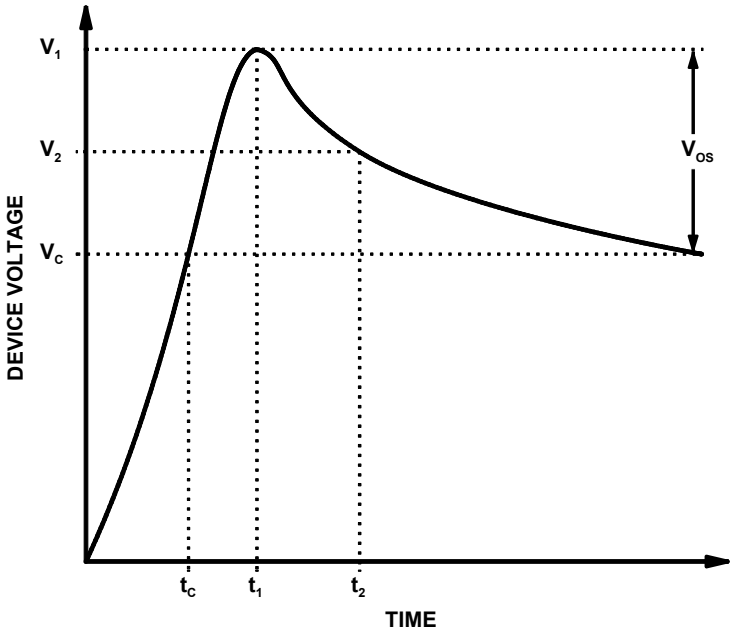

V_2	=	$\frac{V_1 + V_c}{2}$
V_c	=	device clamping voltage for an 8/20 μs current wave form
$V_{os} = V_1 - V_c$	=	voltage overshoot
$t_2 - t_c$	=	overshoot duration
t_c	=	time for the device voltage to reach its clamping voltage
t_2	=	time for the device voltage to decay to 50% of its overshoot value
t_1	=	time for the device voltage to reach its peak value
$t_1 - t_c$	=	response time

Figure 21 — Graph illustrating voltage overshoot, response time, and overshoot duration

Copyright © 2006 IEEE. All rights reserved.

Copyright The Institute of Electrical and Electronics Engineers, Inc.
Provided by IHS under license with IEEE
No reproduction or networking permitted without license from IHS
Not for Resale

In typical applications, lead length refers to the length of leads inherent to the device (i.e., device package), and any additional leads provided as part of the application circuitry. This can cause voltage overshoot when testing products in a circuit. From a practical standpoint, users should try to minimize the length and the enclosed loop areas of wires connecting surge-protective devices to the power bus lines and the data line I/O ports. It is also important to consider the board layout of the printed circuit board when designing surge-protective devices in their circuits.

Figure 22c) shows the effect that has been observed on a varistor test piece whose connections enclosed 22 cm^2 instead of 0.5 cm^2. The L di/dt voltage drop in the inductance created by the lead loop added an overshoot of 50 V to the voltage across this varistor with current pulse of 2.7 kA, 8/20 waveshape conducted through the device. Under a steeper front current pulse of 2.5 kA, 0.5/1.5 waveshape, the L di/dt voltage drop of the excessive lead loop area, Figure 22d), added 560 V of overshoot to the voltage with minimal loop area.

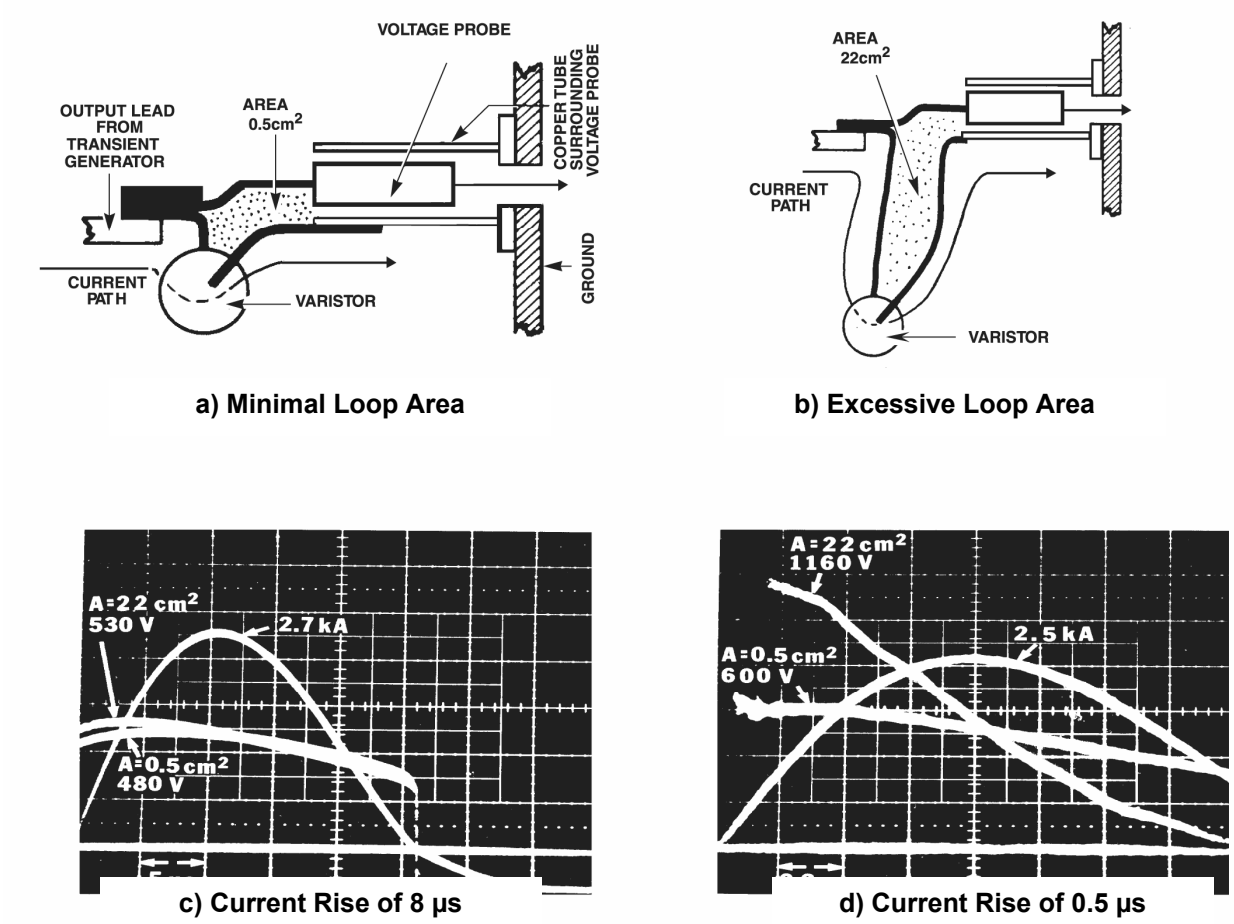

Figure 22— Effect of lead length on "overshoot"

NOTE— Reprinted with permission from Littelfuse Inc. (see Figure 7 in [B22])

8.3.18 Response time, overshoot duration

For solid state devices with fast responding internal active elements voltage overshoot, response time and overshoot duration are phenomena primarily caused by the effect of lead inductance. See 8.3.17. Consequently, measurements of response time should recognize the dependency of voltage overshoot

Copyright © 2006 IEEE. All rights reserved.

Copyright The Institute of Electrical and Electronics Engineers, Inc.
Provided by IHS under license with IEEE
No reproduction or networking permitted without license from IHS
Not for Resale

behavior on lead length and loop coupling rather than treat response time as an intrinsic characteristic of solid state devices.

Due to the high frequencies involved in steep wavefronts, response time and overshoot duration measurements require special techniques, fixtures and extremely fast-responding instrumentation. Response time and overshoot duration will be a function of the wave form used for the measurement, and may not resemble the idealized illustration in Figure 21. For these reasons, reference to response time in device specification is discouraged.

To minimize these inductance related effects, users should follow the precautions cited in 8.3.17.

8.4 Application of varistor surge-protective device components

The application of varistors to limit voltages at the terminals of electronic and electrical equipment requires the selection of a varistor with suitable characteristics, and then the proper physical arrangement of the varistor in the electrical circuit. It also requires the selection or design of equipment that will withstand the overvoltage and surge energy that bypasses the selected varistors in their circuit configuration. An overall economic choice of both equipment and varistors should be made.

The electrical configurations of the most common applications in low-voltage ac power systems are illustrated in Figure 23. If a single varistor is employed, the usual connection is line-to-neutral [see (1) in Figure 23] to limit overvoltage surges in that mode. Surges also can occur between neutral-to-ground [see (3) in Figure 23] and line-to-ground [see (2) in Figure 23], together or independently. In some applications MOVs may be installed between all three lines, as illustrated. Overcurrent protection devices or thermal protection devices or both should be added as appropriate, see 8.4.4.2. For other application circuit examples, see Annex C.

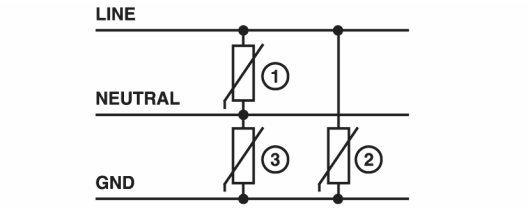

Figure 23—Possible connection of MOVs (simplified)

NOTE 1—Reprinted with permission from Littelfuse Inc. (see Figure 22 in [B21])

NOTE 2—User applications may require overcurrent and/or thermal protection devices, not shown in figures.

8.4.1 Operational compatibility

Surge-protective devices may be connected between the ac line ungrounded conductor and the equipment grounding conductor, grounding path or grounded metal parts. The purpose is to protect insulation against damage by surge voltages or to prevent flashover between clearances. However, safety concerns related to leakage paths through the varistor must be considered for the particular application. One of these concerns has to do with standby leakage current.

ANSI C101.1-1992 defines leakage current as “All currents, including resistive and capacitive currents, between parts of an appliance accessible to the user and an earth ground or other accessible parts of the appliance.”

As a result of the capacitance associated with the internal semiconducting junctions of a varistor, and also its internal resistance, a varistor will contribute to the leakage current described above. With dc circuits only the

Copyright © 2006 IEEE. All rights reserved.
Copyright The Institute of Electrical and Electronics Engineers, Inc.
Provided by IHS under license with IEEE
No reproduction or networking permitted without license from IHS
Not for Resale

resistive portion will contribute to leakage current. With ac power circuits, the internal capacitance and resistance both contribute. The leakage current will vary with temperature and also is related to the size and energy handling capability of the device. See 8.3.5.

Leakage current through varistors along with other leakage currents in the system can increase the risk of electric shock, or risk personal injury related to reaction levels of electric current, depending on the leakage current levels and other conditions related to the specific varistor application.

With regard to general cord and plug connected appliance applications, ANSI C101.1-1992 describes test procedures and acceptable leakage current limits, and is based on the assumption that the appliance might not be properly grounded by the user. For two- and three-wire (including grounding wire) cord- and plug-connected portable appliances, the leakage current limit is 0.5 Measurement Indication Units (MIU) (the MIU is essentially the rms value of a 60 Hz sinusoidal leakage current in mA). For three-wire (including grounding wire) cord- and plug-connected stationary or fixed appliances, the limit is 0.75 MIU. There are exceptions given where higher limits are permitted (refer to ANSI C101.1-1992 for the specific conditions under which these exceptions apply).

The test methods and leakage current limits of various editions of ANSI C101.1 have been adopted by many nationally and internationally recognized safety standards covering various products. However, some widely used safety standards apply different test methods. The leakage limits may differ from those specified in ANSI C101.1, as shown in the following examples:

a) A standard for patient-connected medical care equipment specifies a maximum of 10 μA of leakage current due to concerns with lower body impedance.

b) A standard for electronic data processing equipment permits leakage current up to 3.5 mA for other than household data processing equipment, recognizing the need for EMI filtering and the likelihood that the equipment will be properly grounded.

The above illustrates the need for the end-product designer to consult with the applicable safety certification testing agency and its standards covering the particular varistor application. The designer should recognize that the leakage current specified in the application standard is the total leakage, and is therefore the sum of the product leakage without the varistor plus the varistor contribution.

In addition to electric shock concerns, consideration should also be given to the possibility that varistor leakage current could interfere with the proper operation of personnel protection devices such as ground fault circuit interrupters (GFCIs). Excessive ground leakage could result in “nuisance operation” of such devices. For example, UL 943 requires a GFCI to trip at 4 mA after 20 ms.

8.4.2 Voltage limiting

The expected clamping voltage of varistors can be found by constructing a V-I graph similar to Figure 16. Load lines can be drawn representing all possible output combinations of a test surge generator under the conditions of this example; i.e., 6 kV open-circuit voltage, and 0.5 kA and 3 kA short-circuit currents. Maximum clamping voltage curves for MOVs can be obtained from manufacturer’s specifications; Figure 16 is for illustration only. The intersections of load lines and clamping curves represent peak operating point predictions for each combination of test condition and MOV size. Predicted values should be verified by testing.

Note that larger diameter MOVs tend to clamp at lower voltages than smaller ones. The user should select the size that best fits the space, cost and performance goals of the application.

The user should be cautioned against selecting a varistor with a clamping voltage so low that it would begin to conduct excessively during high ac or dc power line conditions. This might then interfere with normal operation of the equipment being protected, overheat the varistor and shorten its life due to extended operation above rating. See 8.3.4 for further discussion about selecting a varistor with adequate rating.

--`,,```,,,,````-`-`,,`,,`,`,,`---
Copyright © 2006 IEEE. All rights reserved.

Copyright The Institute of Electrical and Electronics Engineers, Inc.
Provided by IHS under license with IEEE
No reproduction or networking permitted without license from IHS
Not for Resale

A factor that can affect the varistor's measured peak voltage is lead and circuit inductance, due to L di/dt voltage. For further discussion, see 8.3.17, 8.3.18, and 8.3.1.

8.4.3 Failure modes

The case must be considered in which power frequency overvoltages or extreme surge values could occur, exceeding the predictions of limited-base statistics, and in which excess energy might be deposited in the varistor. Like any other component over stressed in this manner, a varistor is subject to failure. The mode of failure will depend on the kind and degree of stress. The failure modes discussed below are short-circuit, degradation, and open-circuit and high clamping voltage.

The use of "fail-safe" to describe a failure mode of a varistor is discouraged, since the consequences of failure, if not mitigated, may present a hazard to equipment or personnel (refer to 8.3.4). Some users may consider that the most desirable condition of a failed device is a low resistance, where the protective function is maintained. Others may prefer failure into a high resistance condition, so that the circuit does not see a fault. Because "fail-safe" can mean opposite things to different users, the recommended practice is to describe varistor failure only by the terms below.

High current flowing in a failed varistor can melt soldered connections or shatter the device. Since these ultimate failure modes are not generally desirable, the common practice is to provide a thermal or overcurrent protective device, or both, in order to disconnect the varistor and clear the fault from the circuit. For a discussion of mitigating the consequences of varistor failure see 8.3.4.

8.4.3.1 Short-circuit failure mode

In this failure mode a varistor may exhibit mechanical damage due to overheating by electrical current. The varistor element may have a punch- through hole between the electrodes, and some of the zinc oxide material may have been reduced to metallic form. Outside of the damaged region, the varistor element may have normal V-I characteristics. Hence, in terms of the equivalent electrical circuit of Figure 13, the parallel resistance component R_{off} has a much lower value in failed varistors. When the failed device is measured out of its circuit and at room temperature, the resistance will be less than 100 Ω at 1 V by the definition of this mode. Typical values may be on the order of 10 Ω or more. The value could be lower at higher temperature at the time of failure.

If a large region of undamaged varistor material exists outside of the point of punch-through, and if the electrodes and other circuit connections remain intact, the failed varistor will continue to suppress a surge voltage.

8.4.3.2 Degradation failure mode

Overvoltage stresses that do not result in functional failure may nonetheless cause an observable change in V-I characteristics. In the degradation failure mode, a device has a nominal varistor voltage of less than 90% of the pretest value. See 8.3.6 for a description of nominal varistor voltage.

A degradation of nominal varistor voltage is likely to be associated with an increase in the device's dc standby current and ac standby power dissipation. Continuing degradation could lead to overheating and premature failure. Consequently, users are cautioned against selecting devices with inadequate voltage ratings. See 8.3.4, 8.3.5, and 8.3.9 for further discussion.

Degradation may be explained as due to a reduction in the value of parallel resistance R_{off} in the equivalent circuit of Figure 13. It is important to note that such a change would affect only the low-current extremity of the V-I characteristics, and the varistor would continue to perform its surge-protective function.

The outcome of evaluation for this failure mode is sensitive to the current density at which the test is conducted. Specifically, if the current selected is too low, serviceable devices could be unnecessarily rejected. Typical values recommended for the peak current density in this test are on the order of 1 mA/cm^2. It should

Copyright © 2006 IEEE. All rights reserved.

Copyright The Institute of Electrical and Electronics Engineers, Inc.
Provided by IHS under license with IEEE
No reproduction or networking permitted without license from IHS
Not for Resale

be noted that nominal varistor voltage may shift upward without implication that clamping voltage has shifted upward in correlation. Instead, clamping voltage should be measured independently. Consequently, no limit can be recommended for upward change of nominal varistor voltage.

8.4.3.3 Open circuit and high clamping voltage failure modes

The V-I characteristics of varistors used in ac mains applications typically are very stable in the region of protective operation. See Figure 12 for illustration of this region. However, if the electrodes, leads, solder or other connections become damaged, or the varistor element is shattered, the varistor may become open circuited because of an increase in the effective value of series resistance component R_{on} in the equivalent circuit of Figure 13. External mechanical damage is evident in this failure mode almost invariably, and an open circuit voltage condition can be identified in position by visual inspection. The recommended definition of failure is: 1) clamping voltage exceeding 120% of pretest value, or 2) open circuit voltage condition.

8.4.4 Mitigating the consequences of failure

Like any other electronic component, a varistor can fail when subjected to electrical over stress, generally in a short-circuit mode. The consequences of varistor short-circuit failure can vary from violent rupturing of the package to sustained overheating, depending on a number of variables, including the packaging of the varistor in its application and the fault current that flows through it after failure. The latter can depend on the source impedance in the circuit.

Generally, there are three approaches to mitigating the consequences of varistor short-circuit failure. One involves the use of overcurrent protective devices that respond directly to current. Examples are fuses and resettable circuit breakers. The second involves the use of thermal protection devices that respond to heat produced externally to the device itself. Examples are one-shot thermal cutoffs (fusible links), automatically or resettable thermostats, thermistors, etc. The third involves packaging the varistor so that the effect of overheating and/or rupturing of the varistor is contained.

With respect to overcurrent and thermal protection devices, there are two options for electrically connecting such devices as shown in Figure 24. In option (a) of Figure 24, the device disconnects both the varistor and the load from the supply, so that the protected equipment is not exposed to further surges. Under option (b) of Figure 24, only the varistor is disconnected, and the equipment remains powered and able to function. Depending on the type of equipment and its use, one option may be preferable to the other. For example, in the case of option a) of Figure 24, load current requirements can limit how low the rating of an overcurrent protection device can be, whereas load current is not a factor in the rating selected for the device in option (b). On the other hand, in the case of option (b) of Figure 24, the protective device (overcurrent or thermal) must be capable of withstanding (i.e. remaining intact) transient surges that the varistor is capable of diverting. If it is not, then the device can needlessly operate, leaving the equipment operating unprotected. In addition, it should be noted that the resistance and inductance of the device in circuit (b) will add to the circuit's overall clamping voltage.

Copyright © 2006 IEEE. All rights reserved.

Copyright The Institute of Electrical and Electronics Engineers, Inc.
Provided by IHS under license with IEEE
No reproduction or networking permitted without license from IHS
Not for Resale

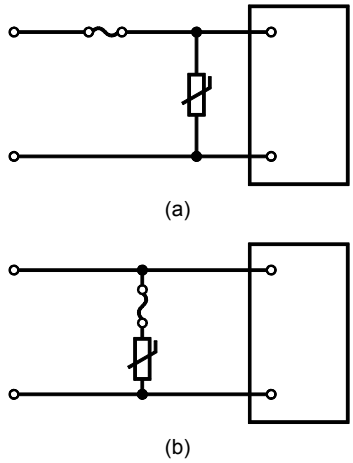

Figure 24— Options for varistor fuse connection

From the foregoing it is clear that it is not appropriate to describe either option (a) or (b) as being necessarily better than the other. If an indicator is wanted of operation of the overcurrent or thermal protection device, then different approaches are possible. A summary of these considerations is available in the literature (see Standler 1989 [B32]).

The choice of rated trip current of an overcurrent protection device will be limited to a lower bound by such factors as load requirements (if the overcurrent protection device is in series with the load), and the need for the device to withstand (i.e., not open) in the presence of expected transient currents. These factors, can limit the usefulness of overcurrent protection devices. Thermal protection devices might be needed as well.

Further discussion of overcurrent protection devices, thermal protection devices, and varistor packaging follows in 8.4.4.1, 8.4.4.2, and 8.4.4.3.

8.4.4.1 Overcurrent protection devices

Overcurrent protection devices are most effective in the case where the source impedance is relatively low, and therefore the current available to the varistor, if it fails in the short-circuit mode, is relatively high. In this scenario the overcurrent protection device has the advantage of speed of response as compared to a thermal protection device, because the latter requires time for heat transfer to take place in order to function. It should be noted that fuses generally respond more quickly than some types of circuit breakers, especially the thermal trip type. Regardless of type, an overcurrent device should be suitable for the fault current available in the circuit.

The customary way to describe the response of overcurrent protection devices is in terms of an I^2t rating. These ratings are usually based on time events longer than transient surge voltages, see Figure 25. For example, the melting curve of the 3-A fast fuse shows a melting current of 46 A at 0.01 s, which corresponds to an I^2t of 21 A^2s.

Copyright © 2006 IEEE. All rights reserved.

Copyright The Institute of Electrical and Electronics Engineers, Inc.
Provided by IHS under license with IEEE
No reproduction or networking permitted without license from IHS
Not for Resale

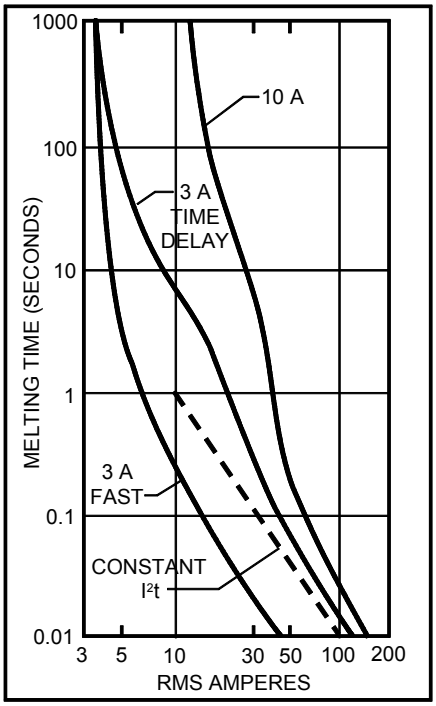

Figure 25— Time-current characteristic of fast acting and time delay fuse

The applicability of overcurrent protection device ratings to surge currents needs to be established. For example, the standard impulse for characterizing varistors and other surge-protective devices is an 8/20 current waveshape. The I^2t integral for this impulse can be computed. For a 1000 A crest, the I^2t value of the 8/20 impulse waveshape has been found to be close to 20 A^2s (see Martzloff 1985 [B25]).

Empirical tests have shown that the observed I^2t fuse melting current for 8/20 current waveshape can be similar to the I^2t rated value for 0.01 s duration currents. This relationship held for both fast and time delay types. However, the statistical nature of fuse melting should be recognized, and at a given current some fuses from a group of the same type will survive more surge repetitions than others. Further, to avoid premature opening of a fuse after repeated surges, the surge current should not exceed 25% of the value corresponding to the fuse's I^2t rating. In other words, a fuse selected to withstand a few surges at 3 kA, for example, would be expected to withstand many times more surges at 750 A.

The opening of a current-limiting fuse will take place when there is sufficient fault current to melt the fuse wire. Overvoltage swells have the potential to overheat surge-protective devices without causing short-circuit failure (users are cautioned against selecting devices with inadequate voltage ratings; in the absence of specific requirements, it is recommended that device ratings preferably should have margins of 20% or more above nominal ac power system voltages. See also 8.3.4.)

8.4.4.2 Thermal protection devices

Thermal protection devices can be effective in cases where overcurrents through a varistor might be so low as to not result in the operation of an overcurrent protection device, and where currents yet could be high enough to cause a varistor to reach extremely high temperatures sufficient to result in extreme overheating. In this scenario the thermal protection device can have an advantage over an overcurrent protection device, provided that it is adequately thermally coupled to the varistor, so that it is able to limit the ultimate temperature of the varistor. Some situations are described below in which a thermal protection device could be applied.

Copyright © 2006 IEEE. All rights reserved.

Copyright The Institute of Electrical and Electronics Engineers, Inc.
Provided by IHS under license with IEEE
No reproduction or networking permitted without license from IHS
Not for Resale

One, if a power frequency overvoltage occurs, ac standby power dissipation will rise. This could result in heating of a varistor. Two, if a varistor is exposed to stresses beyond rating it could be subject to a degradation failure mode. With severe degradation of a varistor, standby power dissipation could rise enough to cause heating. Three, if the power source impedance is relatively high, and the fault current available is too low to operate an overcurrent device, even if a varistor failed in the short-circuit mode, the power dissipated could cause heating. Then, in these cases a thermal protection device could operate to disconnect the varistor.

If thermal protection devices are to be used, further work also needs to be done to evaluate the effect of surge transients on their operating characteristics.

8.4.4.3 Packaging

The consequences of varistor failure and heating may also be mitigated by the way the varistor is packaged in the application, such as by isolating the varistor from flammable materials, positioning the varistor away from openings in the enclosure, and/or enclosing the varistor in a substantial non-flammable or flame resistant housing.

The choice of whether to use overcurrent protection, thermal protection, application packaging or some combination of the three, as a means of mitigating the consequences of varistor failure will depend on the specific application. Generally, it is desirable to conduct tests that simulate the failure modes of concern on the complete product in order to determine the effectiveness of the means used to mitigate the consequences of varistor failure.

8.4.5 Operations to Failure

The varistor ratings described in this guide help the user to estimate the ability of a specific type to function reliably in a particular surge environment. Clearly, the estimate depends on assumptions made about the actual environment from generalized descriptions such as IEEE Std C62.41-1992.

8.4.5.1 Matching varistors to their surge environment

A procedure for evaluating the cumulative effect of surges on varistors in their use environments has been devised (see Martzloff 1985 [B25]). The method constructs a model of the surge environment using IEEE Std C62.41-1991 as a basis and derives a set of surges of specific amplitude. This enables calculation of an annual rate of consumption of the rated pulse life of varistors of specified type and diameter. Varistors then can be selected such that rated life will not be consumed within some time chosen as a design goal.

The procedure was used to calculate the time to consume rated life for devices installed at a Category B service entrance location and also for devices installed in short branch circuits. Devices at the service entrance were found subject to higher lightning currents than those downstream, because branch circuit wiring tends to limit surge voltage by flashover and to limit surge current through higher impedance. Consequently, varistors near the service entrance need greater surge current handling capacity than those in branch circuits. Users should see Martzloff 1985 ([B25]) for details of the procedure and the findings.

Users of the procedure should note that the expected annual rate of surge occurrence versus voltage level as shown in IEEE Std C62.41-1991 includes all wave shapes. When constructing a model of annual surges it is necessary to assume a value for the fraction of surges that have the effect of 8/20 impulses. This assumption is very significant because the other surges, represented by 100 kHz wave shape, consume little of a typical varistor's rated life. Also, it is necessary to assume an exposure level, such as medium exposure. By contrast, the exposure and actual rate of surge occurrence in service can vary over a very wide range. Clearly, although the procedure is valid, the accuracy of the estimates obtained is limited by possible inaccuracy in assumptions about the environment.

Copyright © 2006 IEEE. All rights reserved.

Copyright The Institute of Electrical and Electronics Engineers, Inc.
Provided by IHS under license with IEEE
No reproduction or networking permitted without license from IHS
Not for Resale

The procedure is not intended as a substitute for conformance to device performance standards where applicable, but can be a useful additional device selection criteria. In the absence of specific requirements the procedure represents a reasonable and conservative approach to selecting device ratings for reliable operation, and to comparing devices of different sizes.

8.4.6 Grounding and bonding

Surge-protective devices may be connected between ac power circuit conductors and the equipment grounding conductor, or to accessible metal parts of the equipment that are connected to the grounding conductor. These devices serve to protect insulation from surge voltages; in turn, the insulation reduces the risk of electric shock to personnel under normal line voltage conditions. On the other hand, when surge-protective devices are so connected, an increased risk of electric shock might arise as a result of the injection of surge current into ground paths, under the following conditions:

a) The magnitude, duration and source impedance of a surge are such that the surge itself poses a risk of electric shock, and either

b) The accessible metal parts of the equipment are not reliably or positively grounded; or

c) Surge-protective devices conduct high surge current into the ground return paths including the grounded power conductor and the equipment grounding conductor,

d) The grounded power conductor, neutral, does not carry enough of the surge current, and a high surge current is injected into the grounding conductor, and

e) The impedance of the combined ground return paths at the surge current frequency is sufficiently high to cause significant peak surge voltage to develop between accessible metal equipment surfaces and surrounding conductive surfaces possibly in contact with personnel. A discussion of the factors in this list follows in 8.4.6.1 and 8.4.6.2.

8.4.6.1 Reliability of grounding

The reliability of grounding of accessible metal equipment surfaces can be affected by numerous factors. In general, the grounding of permanently wired equipment is more reliable than the grounding of equipment that is connected to a branch circuit outlet receptacle by cord and plug means. The latter may be adversely affected by an improperly wired or ungrounded receptacle or a miswired attachment plug or cord. Users are cautioned to make sure that a properly grounded outlet has been provided when using cord connected equipment intended to be grounded, in which surge-protective devices may have been effectively connected between line and accessible metal surfaces.

8.4.6.2 Ground path impedance

Although the impedance of a properly installed grounding system may be sufficiently low at ac power frequencies so as not to be of concern, the impedance may play an important role at surge pulse frequencies. The extent of its importance will be strongly influenced by the specific conditions at the installation site. Discussion of factors affecting those conditions is beyond the scope of this clause, and users should refer to appropriate sources.

8.4.7 Location of varistors

Varistors are components intended to be installed within complete electrical or electronic equipment by the complete equipment manufacturer. Generally, varistors are not “stand alone” type devices suitable for direct installation in the field. At a minimum, a suitable housing and means for making electrical connections in the field are needed.

Copyright © 2006 IEEE. All rights reserved.

Copyright The Institute of Electrical and Electronics Engineers, Inc.
Provided by IHS under license with IEEE
No reproduction or networking permitted without license from IHS
Not for Resale

Consequently, the suitability of a varistor, from the standpoint of safety, in a specific application will entail an investigation of the varistor in combination with the actual end-use equipment. The safe operation of a varistor in the end-use equipment will depend upon a number of factors, including, but not limited to, the following:

a) The intended use of the equipment

b) The function of the varistor and its location in the equipment circuitry

c) The equipment environment (surge environment, power frequency voltage, temperature, humidity, etc).

d) The enclosure of the equipment (flammability characteristics; number, location and size of openings, etc.)

e) The presence of overcurrent and/or thermal protective devices within the equipment

f) Voltage regulation within the equipment

These and other factors are the purview of standards that cover the specific end-use equipment.

8.4.8 Codes and standards

There are two broad categories of end-use equipment applications for varistors.

One category is surge-protective devices for low-voltage ac power circuits. These devices may contain varistors packaged along with other components. Their intended function is to provide some measure of protection for electrical and electronic equipment against the adverse affects of transient surges. Examples of such devices are wall outlet receptacles, cord- and plug-connected power outlet strips, service panel-mounted devices, and outdoor mast-mounted secondary surge arresters. Examples of standards covering such devices are IEEE Std C62.34-2001 and UL 1449.

The second category involves the direct installation of varistors into the circuitry of utilization equipment, such as TV receivers, computers, and appliances. When varistors are included in such equipment, the combination of the varistor and the equipment should be evaluated to an appropriate standard covering the specific equipment. An example of a standard covering such devices is IEEE Std C62.33-2000.

9. Component avalanche junction semiconductor surge-protective devices

This clause presents a description, a theory of operation, test characteristics, and an application guide for avalanche junction semiconductors, hereafter referred to as “avalanche diodes” (AD). Specifically, it covers two terminal devices that are specified as avalanche diodes having symmetrical or asymmetrical characteristics. Applications to ac or dc power and analog or digital communication transmission lines are referenced in this guide.

The avalanche diode is designed to provide protection to voltage-sensitive components or circuits. With the guide, the reader will be able to compare the standard electrical characteristics of the avalanche diode and be able to select a protector to meet most applications.

Although the avalanche diode is a two terminal protector, some applications may require these devices to be configured in series or parallel combination to increase the voltage or power handling capability. In other applications, the avalanche diode may require some additional components to limit or divert a specified level of transient threat or to lower the capacitance.

Copyright © 2006 IEEE. All rights reserved.

Copyright The Institute of Electrical and Electronics Engineers, Inc.
Provided by IHS under license with IEEE
No reproduction or networking permitted without license from IHS
Not for Resale

9.1 Description

The avalanche diode, in its basic form, is a single P-N junction consisting of an anode (P) and a cathode (N). See Figure 26a). In DC circuit applications, the protector is reverse biased such that a positive potential is applied to the cathode (N) side of the device. See Figure 26b).

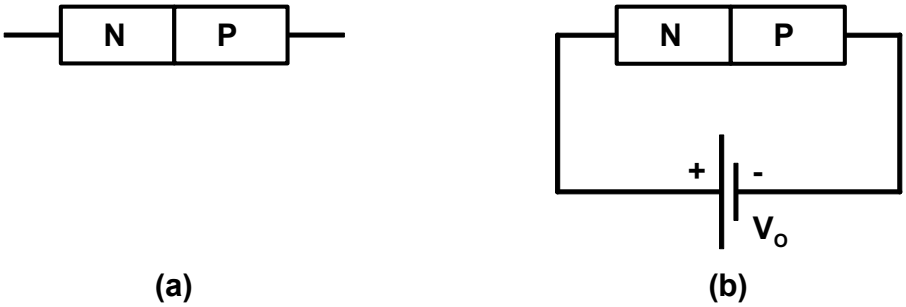

Figure 26— Basic form of avalanche diode

9.2 Theory of Operation

The avalanche diode has two operating modes: 1) off (high impedance), or 2) on (relative low impedance). In the off condition, the protective device has a low current level called leakage current. This current will vary with junction temperature. The transition from an off state to the on state is called the avalanche region. Figure 27 shows a typical V-I characteristics curve of a single P-N junction device. This device has a high reverse voltage characteristic (positive potential to the N side) and a low forward voltage characteristic (positive potential to the P side). It can be used in either direction for limiting transient voltages. Refer to manufacture's individual data sheet for transient electrical characteristics of a single junction device.

Copyright © 2006 IEEE. All rights reserved.

Copyright The Institute of Electrical and Electronics Engineers, Inc.
Provided by IHS under license with IEEE
No reproduction or networking permitted without license from IHS
Not for Resale

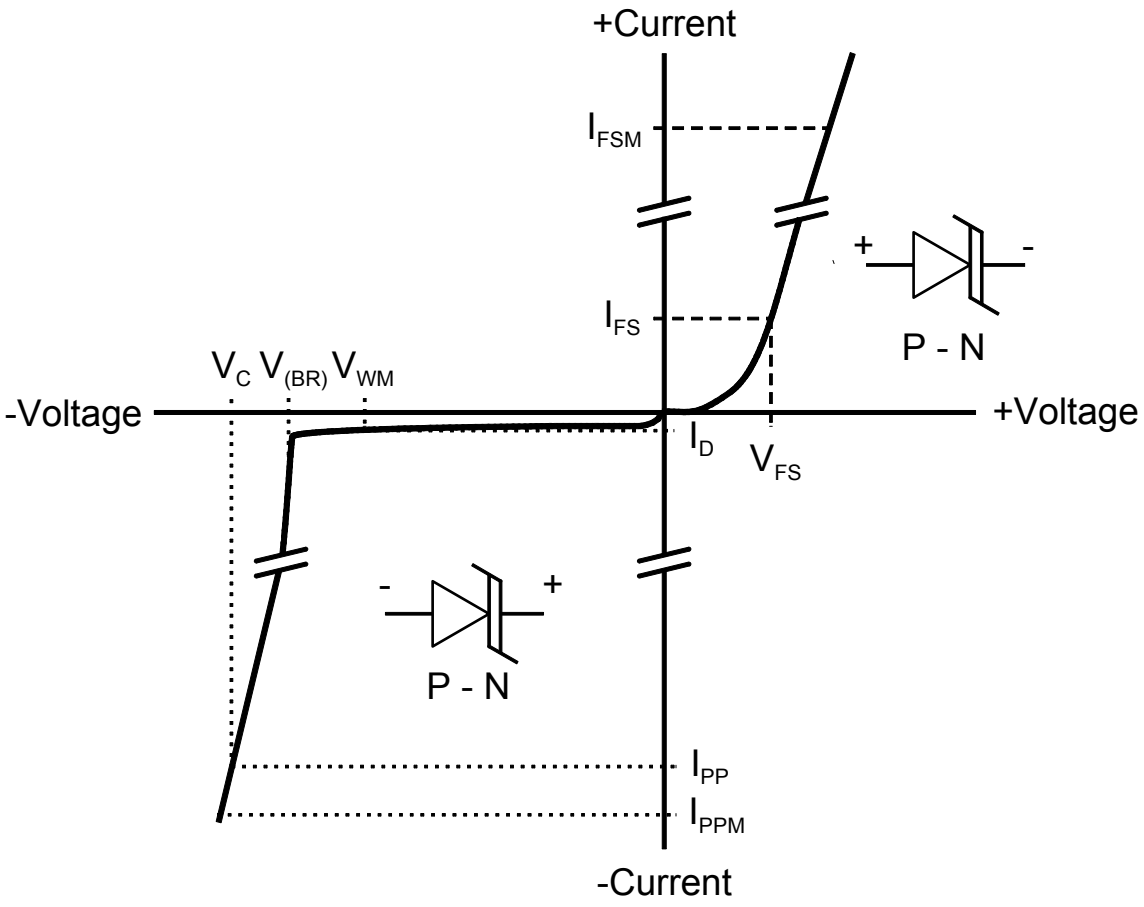

Avalanche Characteristics

V_{WM}	=	Rated Stand-off Voltage
I_D	=	Max. Stand-by Current
$V_{(BR)}$	=	Breakdown Voltage
V_C	=	Clamping Voltage
I_{PP}	=	Peak Impulse Current
I_{PPM}	=	Rated Peak Impulse Current

Forward Characteristics

V_{FS}	=	Forward Voltage
I_{FS}	=	Forward Current
I_{FSM}	=	Rated Forward Surge Current

Figure 27 — Avalanche diode component V-I characteristics

The electrical characteristics of an asymmetrical device are shown in Figure 27 for a single P-N junction diode. For symmetrical devices, the avalanche characteristics (positive potential to the N side) will apply in both directions of its V-I curve.

There are some additional parameters, which are not shown in Figure 27, such as capacitance, and characteristics that vary with temperature, which may affect the application of the avalanche diode. These can be found in manufacturers' data sheets and will be discussed here when they apply to specific applications for products selection. The avalanche diode performance characteristics are defined in IEEE Std C62.35-1987, which will be used as a source document for this guide.

Copyright © 2006 IEEE. All rights reserved.

Copyright The Institute of Electrical and Electronics Engineers, Inc.
Provided by IHS under license with IEEE
No reproduction or networking permitted without license from IHS
Not for Resale

9.3 Avalanche diode test characteristics

Basic parametric considerations of avalanche diodes (see 9.3.1, 9.3.2, and 9.3.3) are detailed explanations of the ratings and characteristics that are the minimum necessary to use the devices in most applications. 9.3.4 through 9.3.18 of this guide define additional parameters, which might be useful in other applications. Current impulses for these tests use a 10/1000 waveform.

To prevent confusion, a clear distinction must be made between the 10/1000 waveform specified in this portion of the guide and other 10/1000 waveforms that are specified in some other documents, such as IEEE Std C62.41-1991. In this part of this guide, the 10/1000 waveform is being used to characterize device parameters (as is explained in the following two paragraphs). On the other hand, documents such as IEEE Std C62.41-1991 are concerned with the withstand capability of a product in a given application.

In order to be useful for characterization of device parameters, it is necessary that the 10/1000 waveform specified in this guide be independent of the device. This could mean the 10/1000 waveform specified here may be supplied by an active circuit. This active circuit will automatically vary its source impedance to maintain invariant current regardless of load impedance changes, including those resulting from the operation of the solid state protector under test.

In an application test, it is expected that the protection device will modify the applied waveform. Application waveforms are supplied by circuits that have a fixed source impedance. As a result, application waveforms may only be specified for a specific load impedance (for example, an open circuit, or a short circuit). Typically, a 10/1000 application waveform is a short circuit current (SCI) waveform. When such a waveform is applied to an actual device, its amplitude and waveshape will differ from that of a SCI waveform. Clause 9 of the guide does not discuss such application waveforms.

9.3.1 Clamping Voltage (V_c)

Clamping voltage is the measured, peak (crest) voltage across the device assuming that the external lead terminations do not adversely add to this voltage. For this definition, a waveform of 10/1000 is used as the standard test current impulse to minimize the effects of the external lead lengths. The user is cautioned, however, that an impulse with a fast rising front will add overshoot voltage (V_{OS}), due to lead inductance, to the clamping voltage. Overshoot voltage is discussed in 9.3.13.

Clamping voltage will vary as a function of the magnitude of the applied peak impulse current for a specified waveform. This voltage is a result of the device series resistance and some thermal effect. The thermal rise in voltage is due to long duration pulses that can be identified by the gradual increase and decay in the voltage above the trailing edge of the voltage waveform, as seen in Figure 28. This thermal rise is a part of the actual (measured) clamping voltage.

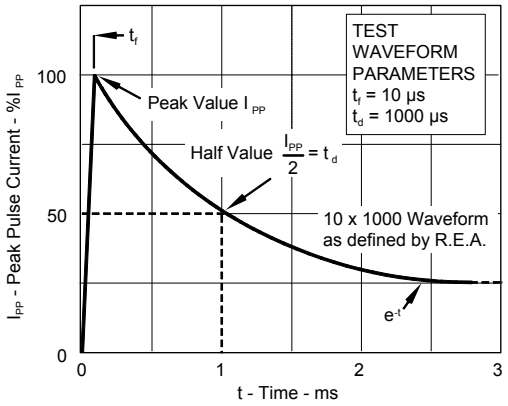

Figure 28 — Impulse voltage waveform (10/1000µs)

Copyright © 2006 IEEE. All rights reserved.
Copyright The Institute of Electrical and Electronics Engineers, Inc.
Provided by IHS under license with IEEE
No reproduction or networking permitted without license from IHS
Not for Resale

Users are cautioned to review the individual manufacturer's data sheet to confirm the level of peak pulse current applied to the device for each impulse waveform. For example, the minimum clamping voltage is at the point of junction avalanche, which is measured at peak current level of l mA to 10 mA for less than 10 ms. Although this voltage is often expressed as a clamping voltage by some manufacturers, it is defined here as the breakdown voltage (see 9.3.6).

Temperature will also cause the clamping voltage to vary due to the temperature coefficient of the device. Most devices have a positive temperature coefficient that will cause the voltage to increase in temperature as defined by a manufacturer's data sheet under temperature coefficient of breakdown voltage expressed as mV/°C or %/°C (see 9.3.18).

Typical values of clamping voltage range from 7 V to 540 V.

9.3.2 Rated peak impulse current (I_{PPM})

This is also referred to as rated multiple peak impulse current, reference 9.3.5 of IEEE Std C62.35-1987. Rated peak impulse current is the maximum value of a peak impulse current that is applied to a device for a minimum of 10 pulses using a 10/1000 waveform and maximum duty cycle of 0.01% without causing device failure. The clamping voltage measured during this test is considered the "maximum clamping voltage" for a given current and pulse waveform for any device.

Due to the number of waveform combinations and the possible peak current ratings for a wide voltage range of devices, most manufacturers will include a peak pulse power vs. impulse time curve, similar to Figure 29, on their data sheets to define the operating characteristics of a device over time. Using this curve and the maximum clamping voltage indicated in the previous paragraph, it is possible to define the peak impulse current of a given device for any impulse duration. In Figure 29, the Pulse Time (t_d) is considered the time duration of an impulse waveform that is for 10/1000 the 1000 is the impulse duration or t_d. Divide the peak pulse power by the "maximum" clamping voltage to determine the peak impulse current for a specified impulse duration.

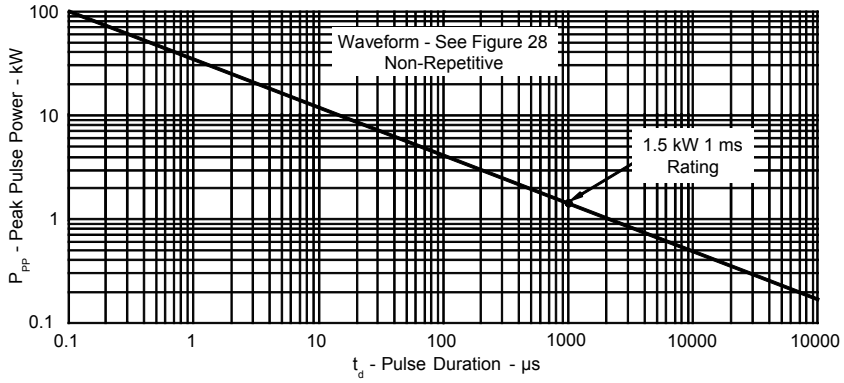

Figure 29— Peak pulse power vs. pulse time

It is this peak impulse current that is used to select a device for a specified transient waveform. The transient environment is usually defined in terms of its peak transient current over a specified impulse, duration. It is this transient current that the device is designed to divert away from the load. The user is advised to understand the manufacturer's current ratings on a data sheet and apply them to the application. In some applications, it may be necessary to insert a series impedance in the line ahead of the protector to assure its performance to the designed specifications.

Copyright © 2006 IEEE. All rights reserved.

Copyright The Institute of Electrical and Electronics Engineers, Inc.
Provided by IHS under license with IEEE
No reproduction or networking permitted without license from IHS
Not for Resale

The peak pulse current specified by the manufacturer is considered repetitive with a specified duty cycle. Refer to the individual manufacturer's data sheet for this specific information, which relates to the average power handling capability of the device. For duty cycles greater than specified amount, contact the manufacture for details on the alternatives. For impulse durations greater than 1.0 ms, or a duty cycle exceeding the manufacturer's rating, an alternate device might be required.

Although I_{PPM} is determined by conducting multiple pulses, the purpose of conducting multiple pulses is to establish that the device can reliably handle a single pulse and is not intended to be a measure of the lifetime rated pulse current (see 9.3.5).

9.3.3 Rated stand-off voltage (V_{WM}) / Rated working RMS voltage ($V_{WM(RMS)}$)

Rated stand-off or working RMS voltage is that voltage whose peak value is the manufacturer's recommended maximum continuous operating voltage of the avalanche diode that is determined by multiplying the minimum breakdown voltage by .9 or .95. These voltage ratings are to be considered the maximum circuit, system, or equipment operating line voltage when operating over the device's full operating temperature range. Exceeding this value will cause clipping of the signal or an increase in the steady state power operating condition of the device.

9.3.2.1 Rated stand-off voltage (V_{WM})

For dc applications, the rated stand-off voltage applies to the maximum working dc or peak voltage application. For avalanche diodes, this rating is determined by the minimum avalanche breakdown of the P-N junction. This voltage rating is typically 10% below the minimum breakdown voltage due to the temperature coefficient of the breakdown voltage. Refer to the individual manufacturer's data sheet for actual values. Differences between stand-off and breakdown will also be determined by the maximum operating temperature of the system. For operating temperature ranges less than the maximum, the voltage difference can be reduced. All silicon avalanche junction diodes have a positive temperature coefficient of breakdown voltage. The stand-off voltage is based upon the minimum temperature value, which requires that the voltage to be specified at 10% below the minimum breakdown voltage. For a temperature value between minimum and 25 °C, the temperature coefficient parameter can be used to calculate a specified stand-off voltage below the minimum breakdown voltage. For example, if the low temperature operation is –10 °C, the difference from room temperature (25 °C) is 35 °C. Multiply the temperature coefficient by 35 to obtain the recommended voltage difference between the stand-off and breakdown voltage.

$$V_{diff} = \alpha(t - t_0)$$

where…

V_{diff} = voltage difference between the Stand-off voltage and the Breakdown voltage
α = temperature coefficient
t = temperature at minimum breakdown voltage
t_0 = room temperature

9.3.2.2 Rated working RMS voltage ($V_{WM(RMS)}$)

For ac applications, the peak (crest) voltage value must be used when determining the stand-off voltage. The rated working RMS voltage $V_{WM(RMS)}$ applies to bidirectional devices with symmetrical voltage characteristics, that is in both polarities. Due to the electrical characteristics being specified in dc or peak values, all RMS operating circuit values must be converted to their peak values. For example, a sinusoidal RMS voltage of 110 V (ac) must be multiplied by 1.414 to obtain the peak voltage.

Voltage ratings are subject to the same cautions and instructions for temperature as the stand-off voltage considerations stated in 9.3.2.1. Users are to review the manufacturer's data sheet in reference to this parameter.

Copyright © 2006 IEEE. All rights reserved.

Copyright The Institute of Electrical and Electronics Engineers, Inc.
Provided by IHS under license with IEEE
No reproduction or networking permitted without license from IHS
Not for Resale

9.3.3 Stand-by current (I_D)

Stand-by current is the dc or steady state reverse leakage current through the avalanche diode under a reverse bias voltage condition. This parameter is always measured at room ambient temperature 25 °C. In general, the reverse leakage current will double with every 10 °C to 15 °C rise injunction temperature. The stand-by current is the level of current that is diverted by the presence of the diode being placed across the line. Its specific value is not always an indication of the device reliability, but must be considered for circuit operation in some applications. Stand-by current is measured at the rated stand-off voltage for dc or steady state applications and at the RMS voltage for ac applications.

Typical values of stand-by current range from 0.01 μA to 1000 μA.

9.3.4 Rated peak single surge transient current (I_{SM})

This is the maximum value of peak impulse current, 10/1000 waveform, which a device must withstand without causing failure. This rating is a means of establishing the fail short condition of a specific voltage type before failure that might be expected in an application environment.

A specific device type may withstand a rated peak single impulse transient current. However, due to the variations in the cross sectional area of an active junction, not all manufacturers products are alike. This value might vary from one manufacturer to another. Each manufacturer must identify this parameter for each device type and voltage (V_{WM}) rating. An avalanche diode might withstand several exposures at this surge value, but it should not be considered a peak rating nor a design limit for an application. For lack of an industry standard, it is suggested that this value be derated by 5% in any application.

9.3.5 Lifetime rated pulse current

This is a multiple impulse current rating for a defined waveform that may be applied over the lifetime of the device without causing failure. The ratings are based upon both an 8/20 and 10/1000 waveform, refer to Table I in IEEE Std C62.35-1987. These ratings are not usually a part of a manufacturer's specification for avalanche diodes. Generally, data of this kind must be performed on an individual product bases. This is due to the different methods of device construction, between the various product families. Individual manufacturer's data is a meaningful measure of the life expectancy of an avalanche diode under actual in-service conditions.

9.3.6 Breakdown voltage (avalanche) $V_{(BR)}$

The breakdown voltage is a characteristic that is measured at l mA, which may be stated as a minimum or nominal value. This voltage measurement is characteristic of the avalanche point for a P-N junction device.

This characteristic is usually tested with automatic test equipment using a pulse width of less than 10 ms. For dc current measurements, the user must take into consideration the temperature coefficient of the device and the increase in voltage due to self heating. This same consideration must be given to the room ambient temperature conditions.

Typical values of breakdown voltage range from 3 V for single diodes to 850 V or higher for multi-stacked diodes (diodes in series)

9.3.7 Rated multiple peak pulse power dissipation (P_{PPM})

The multiple peak pulse power is a rating that is derived from multiplying the maximum clamping voltage (V_C) times the rated peak impulse current (I_{PPM}). Due to self heating of a P/N junction device for long pulses (greater than 300 μs), the voltage is not coincident in time with the peak pulse current. For lack of an industry

Copyright © 2006 IEEE. All rights reserved.

Copyright The Institute of Electrical and Electronics Engineers, Inc.
Provided by IHS under license with IEEE
No reproduction or networking permitted without license from IHS
Not for Resale

standard, an impulse of 10/1000 is used to classify most manufacturers' peak pulse power ratings, such as 500 W, 1500 W, and 5000 W. This parameter is commonly used by a manufacturer as the product identifier for a series or family of device components. Contact the individual manufacturer for the derating factor for this parameter within a device family.

9.3.8 Clamping factor (CF)

The clamping factor of a specific device is the ratio of its clamping voltage (V_C) to its breakdown voltage (V_{BR}), where the clamping voltage is measured at a pulse current of specified peak value and waveshape, and the breakdown voltage is measured at the specified value of direct current.

A lower clamping factor indicates a lower clamping voltage, for a given device at specified current. Devices with higher power ratings, but of the same breakdown voltage value, usually have lower clamping factors than devices with lower power ratings.

9.3.9 Voltage clamping ratio (V_C/V_{WM})

This ratio is a value obtained by dividing clamping voltage by the maximum rated standoff voltage. The value will depend upon the test current at which clamping voltage is measured for a given device type. Both voltage measurements must use the same units of measurement, such as peak volts.

In making comparisons between products the user should take care to see that similar definitions and test conditions are used. The surest course is to define the stand-off voltage relative to the minimum breakdown voltage and the clamping voltage conditions of the devices under question. Comparing the data in a manufacturer's data sheet is important but may not be adequate for all products.

If this parameter is important for a specific application it is best to contact the individual manufacturer of interest. They can provide the data or suggest a product that can meet the application needs. As with other parameters the voltage clamping ratio is dependent upon the manufacturing process and procedures as well as other device characteristics, such as junction area.

9.3.10 Incremental surge resistance (R_S)

An avalanche junction semiconductor, in its on-state, presents a resistance to the flow of surge current. When the applied surge pulse is of short duration, causing very little heating in the device, the value of R_S is constant. Pulses of longer duration, which generate heating, will result in an increase of R_S.

The incremental surge resistance of an avalanche junction semiconductor is directly related to its clamping voltage (V_C). Clamping voltage is a much more useful parameter than R_S in determining the protection characteristics of a device. Knowledge of the Incremental surge resistance may be useful when a surge generator is designed to deliver a precise peak current of a precise waveshape through a specific device.

9.3.11 Capacitance (C)

All avalanche junction semiconductor surge-protective devices have a value of capacitance that is directly proportional to their area and inversely proportional to their breakdown voltage. Capacitance will decrease with an increase in an applied dc bias voltage across the reverse direction of a P-N junction, as in Figure 30. Capacitance will also decrease with increasing frequency from 5% to 50% depending upon the breakdown voltage.

Copyright © 2006 IEEE. All rights reserved.

Copyright The Institute of Electrical and Electronics Engineers, Inc.
Provided by IHS under license with IEEE
No reproduction or networking permitted without license from IHS
Not for Resale

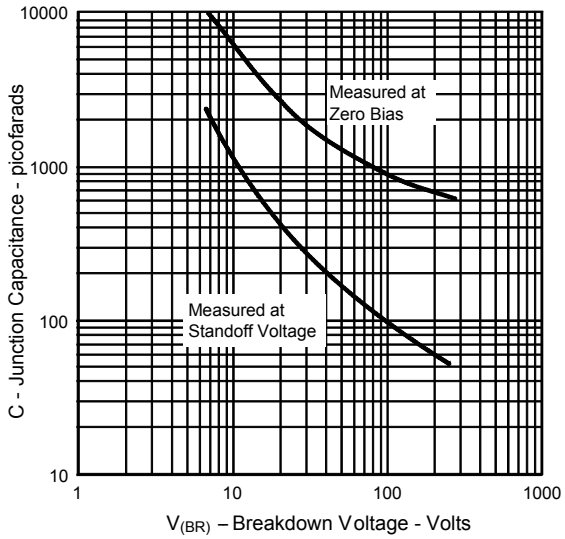

Figure 30— Typical capacitance vs. breakdown voltage (undirectional only)

Due to the large cross sectional area of the avalanche junction device, the capacitance can range from a few hundred picofarads up to several thousand picofarads depending upon the device breakdown voltage. Whereas these values of capacitance may not be significant for dc applications, for high-frequency (fast data rates) data lines the capacitance may have to be compensated. A high-voltage rectifier diode may be connected in series combination with the avalanche diode of opposite polarity for capacitance compensation. The capacitance of a bidirectional device to a unidirectional device of the same breakdown voltage will be 30% to 50% less.

Typical values of capacitance range from 5 pF for single diodes to 10 000 pF for multiple diodes connected in parallel.

9.3.12 Voltage overshoot (V_{OS})

Overshoot is the voltage that occurs above the P-N junction clamping voltage when subject to a fast rise time impulse. Lead inductance and the metallic interface will cause an incremental voltage increase due to the L di/dt effect. The value of overshoot will depend on the rate of change of the impulse front wave. In typical applications, lead length refers to the length of leads inherent to the device (i.e., device package), and any additional leads provided as part of the application circuitry. This can cause voltage overshoot when testing products in a circuit. From a practical standpoint, users should try to minimize the length of wires connecting surge-protective devices to the power bus lines and the data line I/O ports. It is also important to consider the board layout of the printed circuit board when designing surge-protective devices in their circuits.

9.3.13 Response time, overshoot duration

As defined in IEEE Std C62.35-1987, response time is the time between the point at which V_C is exceeded and the peak overshoot voltage is reached. Due to the high frequencies involved in fast rise time waveforms, response measurements require special fixtures and extremely fast-responding instrumentation. Reference to response time in device specification is discouraged. It is not characteristic of its clamping effectiveness and is dependent upon defined test methods and circuit configuration. Overshoot duration is the time between the same point when V_C is exceeded and the 50% point on the overshoot wave tail.

Copyright © 2006 IEEE. All rights reserved.

Copyright The Institute of Electrical and Electronics Engineers, Inc.
Provided by IHS under license with IEEE
No reproduction or networking permitted without license from IHS
Not for Resale

9.3.14 Rated forward surge current (I_{FSM})

The forward surge current applies to unidirectional avalanche diodes. A positive voltage potential is applied to the anode of the P-N junction device (see Figure 27). Due to the method of testing, most manufacturers use an 8.3 ms half sine wave for this test. Although, due to the availability of standard test equipment, this characteristic is also being tested at the same waveform as for the reverse polarity such as 10/1000 and 8/20. The voltage measurement will always be less than the clamping voltage of the protection device which is the voltage measurement of a single forward diode, P-N junction.

9.3.15 Forward voltage (V_{FS})

Forward voltage is the peak voltage measured across a forward biased unidirectional avalanche diode at a specified pulse current and waveform. This is usually provided for by the manufacturer to help the user determine the voltage that will be experienced on the back side of the circuit element being protected. It is determined by the manufacturer through a series of tests on a population of devices and is usually expressed as a maximum value.

9.3.16 Temperature derating

Due to the dependency of some electrical characteristics to temperature, temperature derating is applied to both the peak pulse power and peak pulse current of a device, see Figure 31. Both power and current are usually rated from 100% at 25 °C to 0% at some elevated temperature defined by the individual manufacturer. Temperatures will range from l00 °C to 175 °C depending upon the method of manufacturing the product and the materials used in the device construction. The derating is normally given as a percentage of the peak pulse power or peak pulse current above the 25 °C temperature.

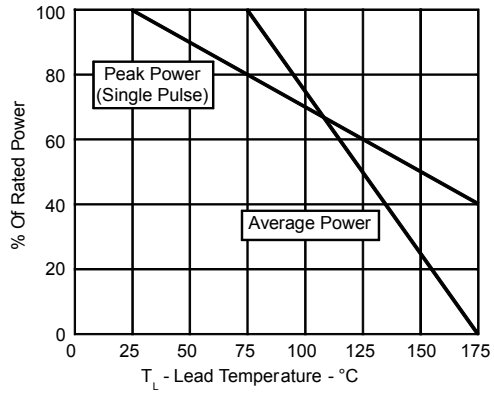

Figure 31 — Derating curve

9.3.17 Thermal resistance ($R_{\theta JA}$, $R_{\theta JC}$, or $R_{\theta JL}$)

Thermal resistance is the effective temperature rise per unit power dissipation of a designed junction, above the temperature of a stated external reference point under conditions of thermal equilibrium. The thermal resistance is an indication of the device's ability to dissipate heat away from the junction of the semiconductor chip. Most manufacturers will show this parameter as a maximum rating under specific conditions such as may be defined at a lead, surface, or room ambient temperature. When the lead or surface temperature is given, it is defined at a distance from the package for plastic devices or the case for through-hole, metal packages.

Copyright © 2006 IEEE. All rights reserved.

Copyright The Institute of Electrical and Electronics Engineers, Inc.
Provided by IHS under license with IEEE
No reproduction or networking permitted without license from IHS
Not for Resale

9.3.18 Temperature coefficient of breakdown voltage ($V_{(BR)}$)/(α $V_{(BR)}$)

All silicon avalanche junction surge suppressors will have a temperature coefficient of breakdown voltage that is positive. This can be expressed as a percentage of the breakdown voltage or defined as a millivolt change with temperature (see IEEE Std C62.35-1987). The clamping voltage will also have the same voltage change with temperature independent of the value of peak pulse test current. The pulse duration of the peak current does not affect the temperature coefficient. There may be an increase in the voltage due to variations in the pulse duration. This will affect the junction heating of the diode, if not properly mounted to a heat dissipating surface, causing a slight increase in voltage.

9.4 Application of avalanche diodes

This device can be used in a number of different types of applications ranging from ac power circuits to dc power circuits to both signal lines and digital data lines. The key for applying this device is its location in the circuit and the level of transient current and the duration of the pulse. These factors are the determining parameters that should be used in the application of this device. It is unrealistic to equate the energy level of the transient to the energy handling capability of the avalanche diode. These two values are not equatable due to the low clamping voltage of the device and the fact that some of the energy will be dissipated in the wire or cable connecting the surge suppressor to the point injection of the transient threat.

9.4.1 Failure modes

9.4.1.1 Degradation failure mode

An avalanche diode will experience an increase in the stand-by current. This is usually a result of degradation in the junction surface area of the device. It can be caused by an imperfection in the junction coating or cracking of the coating material. This can be observed with a curve tracer, in which case the knee (the transition between off condition and the full on condition) will appear to be unstable.

9.4.1.2 Short circuit failure modes

An avalanche diode will have two types of short circuit failure modes. The first is a shorted junction in which the surface or the bulk material will have failed. Evidence of this type of failure mode is a remelting of the silicon material. This is usually due to the device being subjected to a peak transient current value in excess of the device rating. The second failure mode is melting of internal materials that arc across the semiconductor junction as a result of a long duration transient. Both failure modes will cause the device to appear as a low value resistor, usually less than l Ω. In some applications an over current device may be required to prevent continuous current flow if this failure occurs.

9.4.1.3 Open circuit failure mode

A device will be considered open circuit when the breakdown voltage exceeds l50% of pre-tested value at a current used to obtain $V_{(BR)}$ or at a lower current. This condition can exist when the unit has been exposed to a very high level of transient current of a short duration, usually less than l µs. Another condition may exist when the internal leads have fused open. This condition is a result of the device first shorting and then drawing enough continuous current to melt open the lead of the device.

9.4.1.4 High clamping voltage failure mode

A device is considered a failure when the voltage exceeds 120% of the pre-tested clamping voltage. An avalanche junction surge suppressor that has been improperly processed through production may experience this phenomenon.

Copyright © 2006 IEEE. All rights reserved.

Copyright The Institute of Electrical and Electronics Engineers, Inc.
Provided by IHS under license with IEEE
No reproduction or networking permitted without license from IHS
Not for Resale

Annex A

(informative)

Circuit behavior of gas tube arresters

The idealized circuit of Figure A.1 illustrates the behavior of a two-electrode gas tube arrester in a circuit consisting of terminal equipment to be protected, a 50 V (dc) source and a source resistor (R). In Figure A.2, the introduced surge e(t) has a peak value (V_p) of 750 V and the resulting waveform. Figure A.3 contains a rectilinear approximation to the voltampere characteristic of a gas tube arrester along with several superimposed source load lines. The characteristic has two discontinuities that provide the following three branches:

a) An off branch terminating in the breakdown point (V_b).

b) A glow-mode branch characterized by a constant intermediate voltage at currents below the glow-to-arc transition current.

c) An arc-mode branch characterized by a low, nearly constant voltage for all currents above the glow-to-arc transition.

As an aid to understanding the behavior of this idealized gas tube surge arrester, the following representative values for the critical parameters are assumed:

400 V = breakdown voltage
200 V = glow-mode voltage
30 V = arc-mode voltage
0.5 A = glow-to-arc transition current

As a first example, assume that the dc source [V (dc)] is 50 V, the source resistance (R) is 320 Ω, and the terminal equipment has infinite input impedance. The load line for this source is labeled 'I' in Figure A.3a), and the stable operating point on the voltampere characteristic is in the off condition at point A. The protector remains in this condition until the transient voltage of Figure A.2 appears, at which time the operating point rises along the voltage axis until it reaches point B, and breakdown occurs. The operating point then transfers to point C, the intersection of the load line III with the arc-mode branch. As the transient continues to its peak value, the gas tube surge arrester discharge current moves from point C to point D determined by load line IV, which intersects the voltage axis at V (dc) + e(t) = 50 + 750 = 800 V, and has a slope of 320 Ω. As the transient subsides, the discharge current decreases to point E and then transfers to point F along load line II, and the gas tube surge arrester returns to the off condition. At t_{off} the operating point returns to its original position at point A. The resulting surge arrester voltage VG and current IG waveforms during the surge appear in Figure A.4. Notice that, since the gas tube arrester voltage equals the terminal equipment voltage, the gas tube arrester has limited the voltage at the equipment terminals to 400 V, and the duration of the excursion above V (dc) is less than the duration of the incident surge. The load line selected for this example did not involve the glow region. In practice, reactive components or circuit parasitics may cause a brief glow period during the transitions between off and arc.

A second example will involve the glow region and will also illustrate circuit conditions that inhibit the gas tube surge arrester from extinguishing (holdover). The dc source [V (dc)] is 250 V (see Figure A.1), the resistor (R) is 1000 Ω and the transient e(t) is 750 V peak. The off condition of the gas tube surge arrester of Figure A.3 b) is on load line I at point A. The transient causes the gas tube surge arrester to spark over at 400 V at point B. Because of the high source resistance, the operating point transfers to point C in the glow mode on load line II, and then remains in the glow mode until the current increases to the glow-to-arc transition current at point D on load line III. A transfer to the arc region at point E follows, and the discharge current reaches a maximum, point F on load line IV, when the transient voltage is maximum at t_{max}. As the transient decays, the arc-mode discharge current decreases to point G on load line V, and the operating point

Copyright © 2006 IEEE. All rights reserved.

Copyright The Institute of Electrical and Electronics Engineers, Inc.
Provided by IHS under license with IEEE
No reproduction or networking permitted without license from IHS
Not for Resale

then transfers back to the glow mode at point H. The glow-mode current decreases until the transient decays to zero at t_{off}. The operating point is J on load line I. This operating point is a stable portion of the glow mode sustained by the source V (dc). The gas tube surge arrester remains in this holdover condition indefinitely. The gas tube surge arrester discharge current and terminal voltage for this example appear in Figure A.5. The example has been idealized, and a gas tube surge arrester may extinguish under these circuit conditions if reactive components are present, if the voltampere characteristic changes due to heating, or if the transient decay is so rapid that a stable glow mode cannot be established.

NOTE—In some gas tube arresters, the arc-to-glow transition current is significantly lower than the glow-to-arc transition current, causing hysteresis in the voltampere characteristic. This phenomenon is not considered in the examples, but may be important in practice.

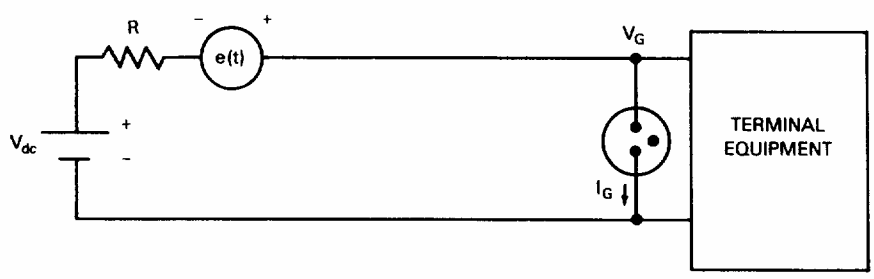

Figure A.1—Idealized surge-protection circuit

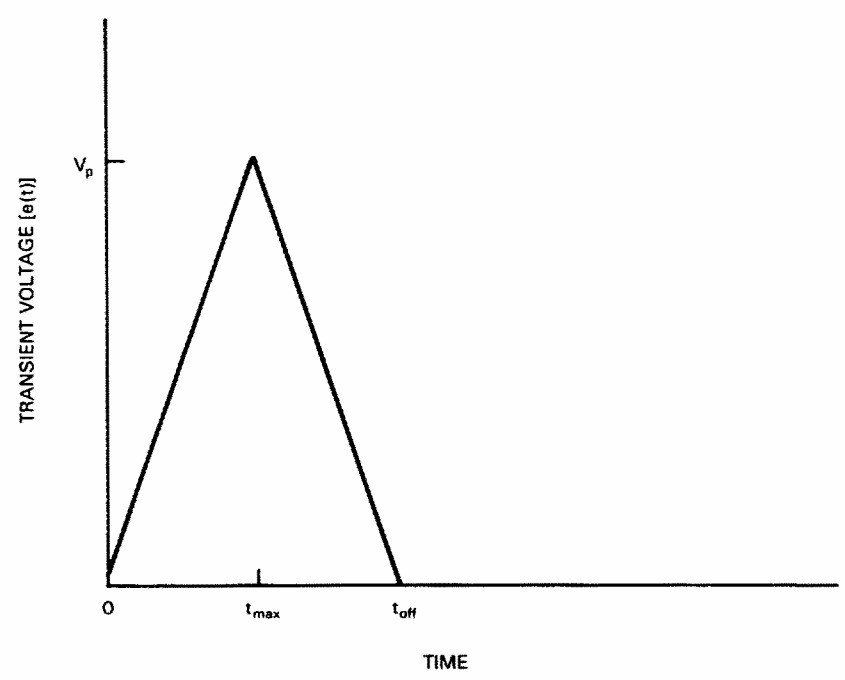

Figure A.2—Simulated transient voltage surge

Copyright © 2006 IEEE. All rights reserved.
--`,,```,,,,````-`-`,,`,,`,`,,`---
Copyright The Institute of Electrical and Electronics Engineers, Inc.
Provided by IHS under license with IEEE
No reproduction or networking permitted without license from IHS
Not for Resale

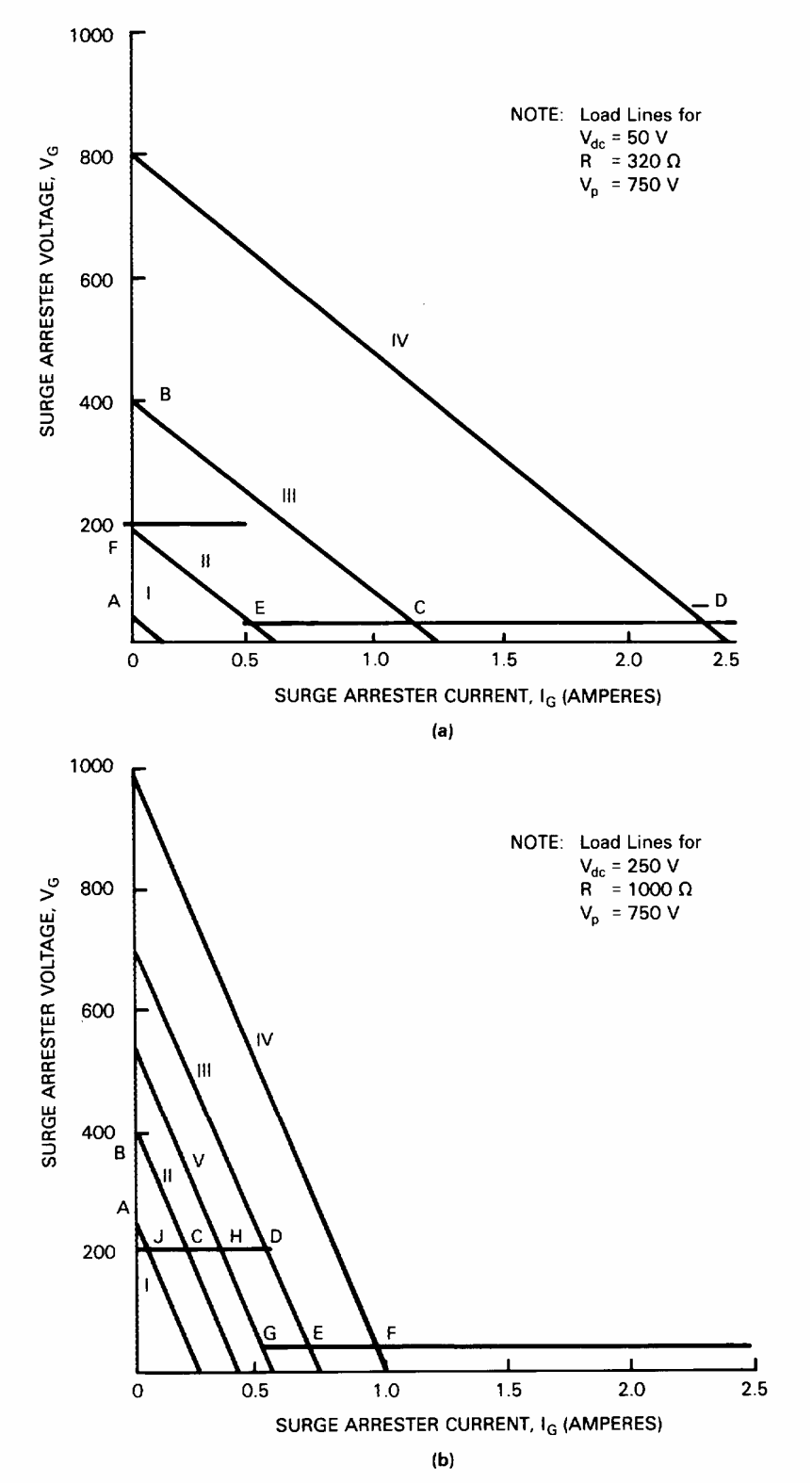

Figure A.3—Rectilinear voltampere characteristic of gas tube surge arresters

Copyright © 2006 IEEE. All rights reserved.

Copyright The Institute of Electrical and Electronics Engineers, Inc.
Provided by IHS under license with IEEE
No reproduction or networking permitted without license from IHS
Not for Resale

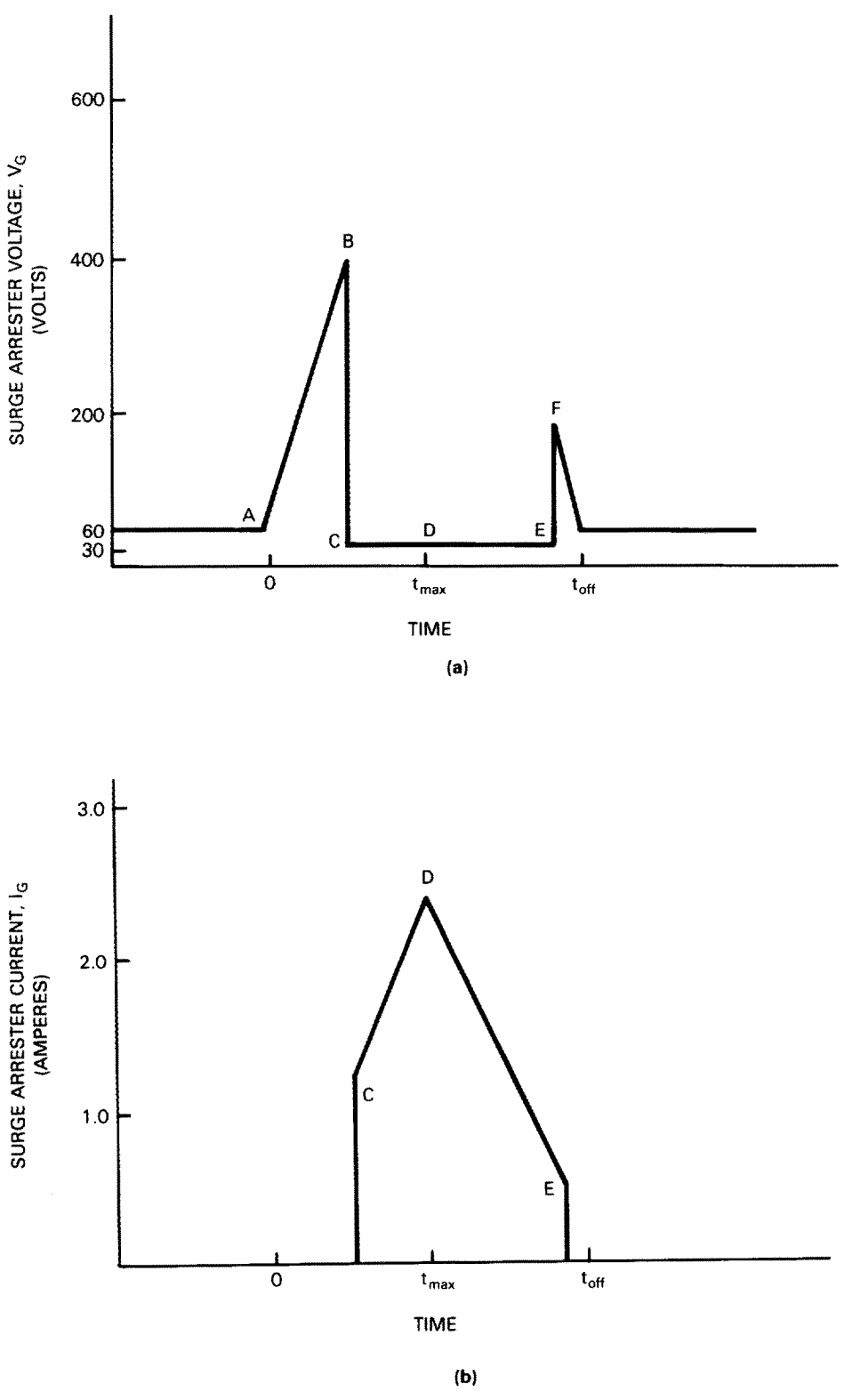

Figure A.4—Surge arrester voltage and current for Figure A.3a)

Copyright © 2006 IEEE. All rights reserved.

Copyright The Institute of Electrical and Electronics Engineers, Inc.
Provided by IHS under license with IEEE
No reproduction or networking permitted without license from IHS
Not for Resale

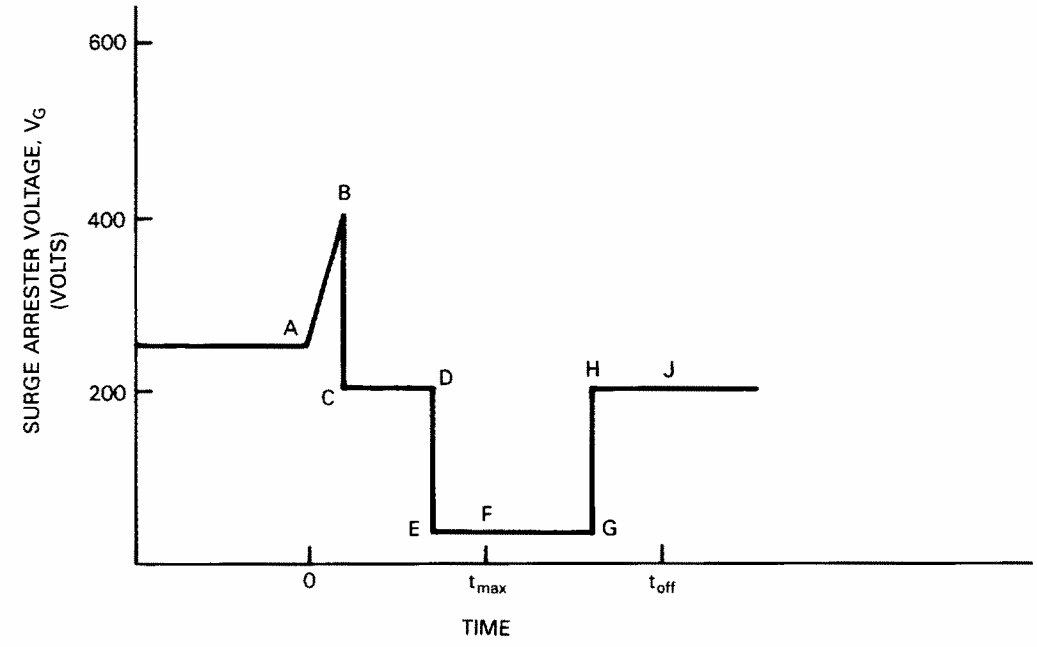

(a)

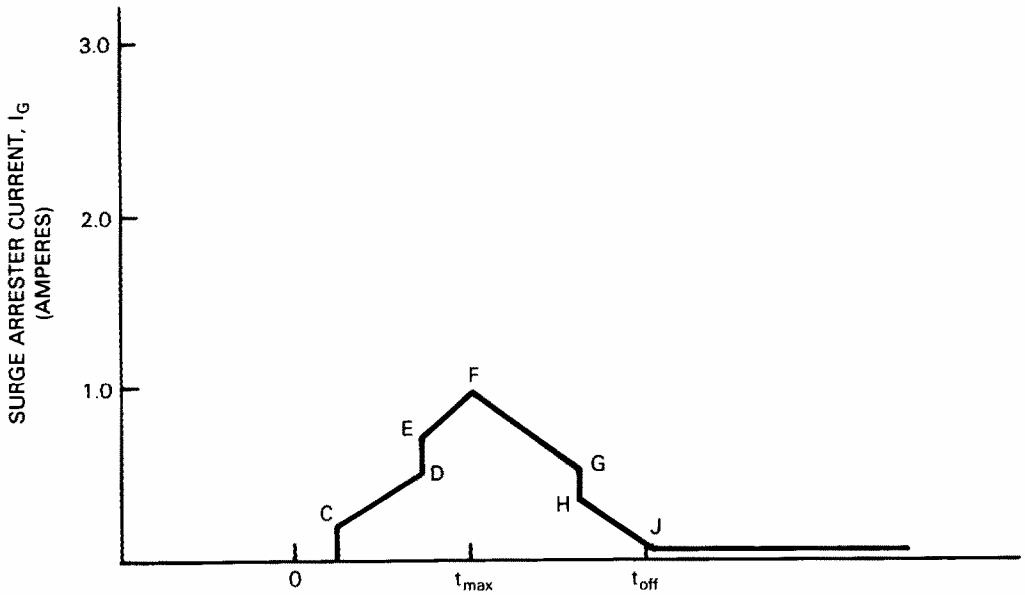

(b)

Figure A.5—Surge voltage and current for Figure A.3b)

Copyright © 2006 IEEE. All rights reserved.

Copyright The Institute of Electrical and Electronics Engineers, Inc.
Provided by IHS under license with IEEE
No reproduction or networking permitted without license from IHS
Not for Resale

Annex B

(informative)

Circuit behavior of air gap arresters

The most common non-backup air gap surge arrester utilizes carbon electrodes. This annex addresses the behavior of such carbon air gap arresters.

The idealized circuit of Figure B.1 illustrates the behavior of a two-electrode air gap arrester in a circuit consisting of terminal equipment to be protected, a 50 V (dc) source [V (dc)], and a source resistor (R). The introduced surge e(t) has a peak value (Vmax) of 750 V and the waveform of Figure B.2. Figure B.3 contains a rectilinear approximation to the voltampere (VA) characteristic of a carbon air gap arrester along with several superimposed source load lines. The characteristic has one discontinuity that provides two branches:

a) An off branch terminating in the breakdown point (0, B).

b) An arc-mode branch characterized by a low, nearly constant voltage for all currents.

As an aid to understanding the behavior of this idealized air gap surge arrester, the following representative values for the critical parameters are assumed:

a) 700 V = breakdown voltage

b) 40 V = arc-mode voltage

As an example that illustrates the undesirable holdover condition, assume that the dc source [V (dc)] is 50 V, the source resistance (R) is 320 Ω, and the terminal equipment has infinite input impedance. The load line for this source is labeled ‘I’ in Figure B.3, and the stable operating point on the VA characteristic is in the off condition at point A. The air gap surge arrester remains in this condition until the transient voltage of Figure B.3 appears, at which time the operating point rises along the voltage axis until it reaches point B, and breakdown occurs. The operating point then transfers to point C, the intersection of the load line II with the arc-mode branch. As the transient continues to its peak value, the air gap surge arrester discharge current moves from point C to point D determined by load line III that intersects the voltage axis at V (dc) + e(t) = 50 + 750 = 800 V, and has a slope of 320 Ω. As the transient subsides, the discharge current decreases until the transient decays to zero at time t_F; the operating point is point E on load line I. This operating point is a stable portion of the arc mode sustained by the source V (dc). In this undesirable circumstance, the air gap surge arrester remains in this holdover condition indefinitely.

The resulting air gap surge arrester voltage (VC) and current (IC) waveforms during the surge appear in Figure B.4. Notice that since the air gap surge arrester voltage equals the terminal equipment voltage, the air gap arrester has limited the voltage at the equipment terminals to 700 V, and the duration of the excursion above V (dc) is less than the duration of the incident surge. This example has been idealized, and a carbon air gap surge arrester may extinguish under these circuit conditions if reactive components are present, if the VA characteristic changes due to heating, or if the current at point E is so low as to result in an unstable arc condition. In any of these conditions the arc will extinguish and the operating condition will return to point A in the off state. A different choice of circuit parameters, such as an increased value of R or reduced value of V (dc), should be made to avoid this condition.

Copyright © 2006 IEEE. All rights reserved.

Copyright The Institute of Electrical and Electronics Engineers, Inc.
Provided by IHS under license with IEEE
No reproduction or networking permitted without license from IHS
Not for Resale

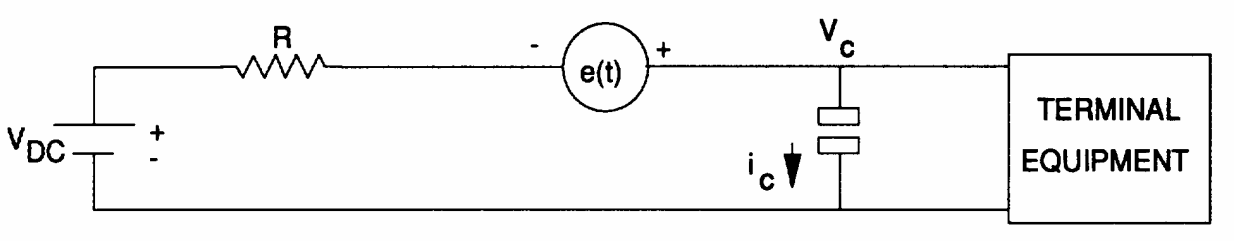

Figure B.1—Idealized surge-protection circuit

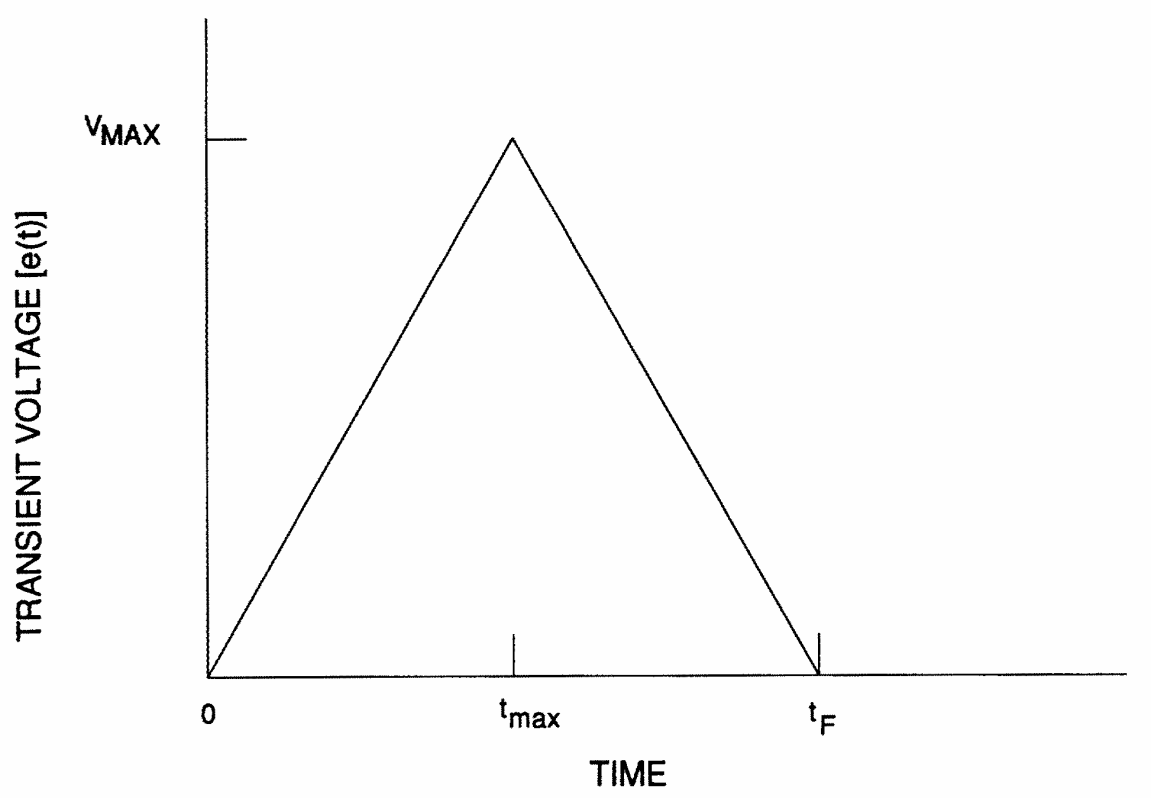

Figure B.2—Simulated transient voltage surge

Copyright © 2006 IEEE. All rights reserved.

Copyright The Institute of Electrical and Electronics Engineers, Inc.
Provided by IHS under license with IEEE
No reproduction or networking permitted without license from IHS
Not for Resale

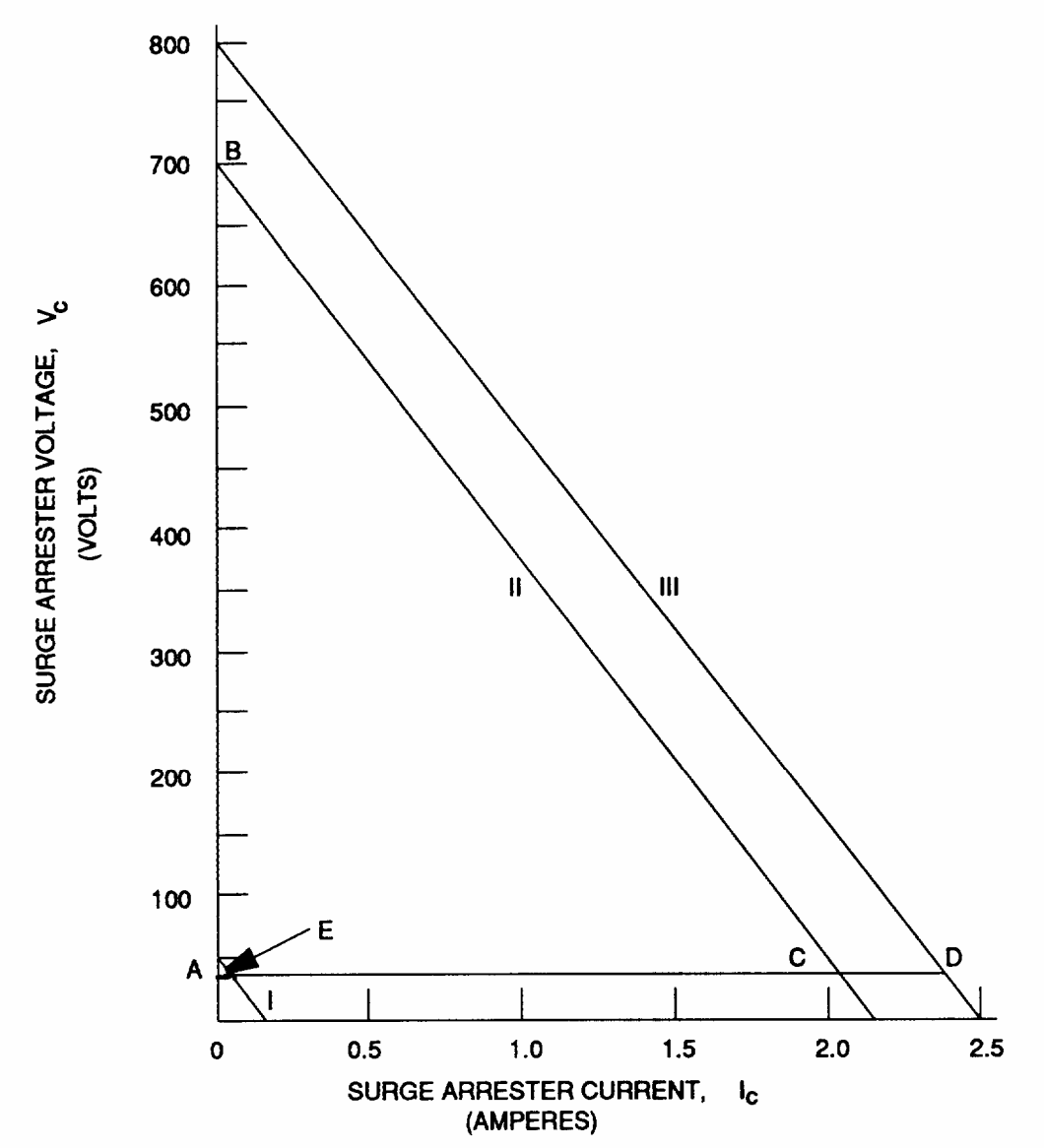

Figure B.3—Rectilinear voltampere characteristic of carbon surge arrester

Copyright © 2006 IEEE. All rights reserved.

Copyright The Institute of Electrical and Electronics Engineers, Inc.
Provided by IHS under license with IEEE
No reproduction or networking permitted without license from IHS
Not for Resale

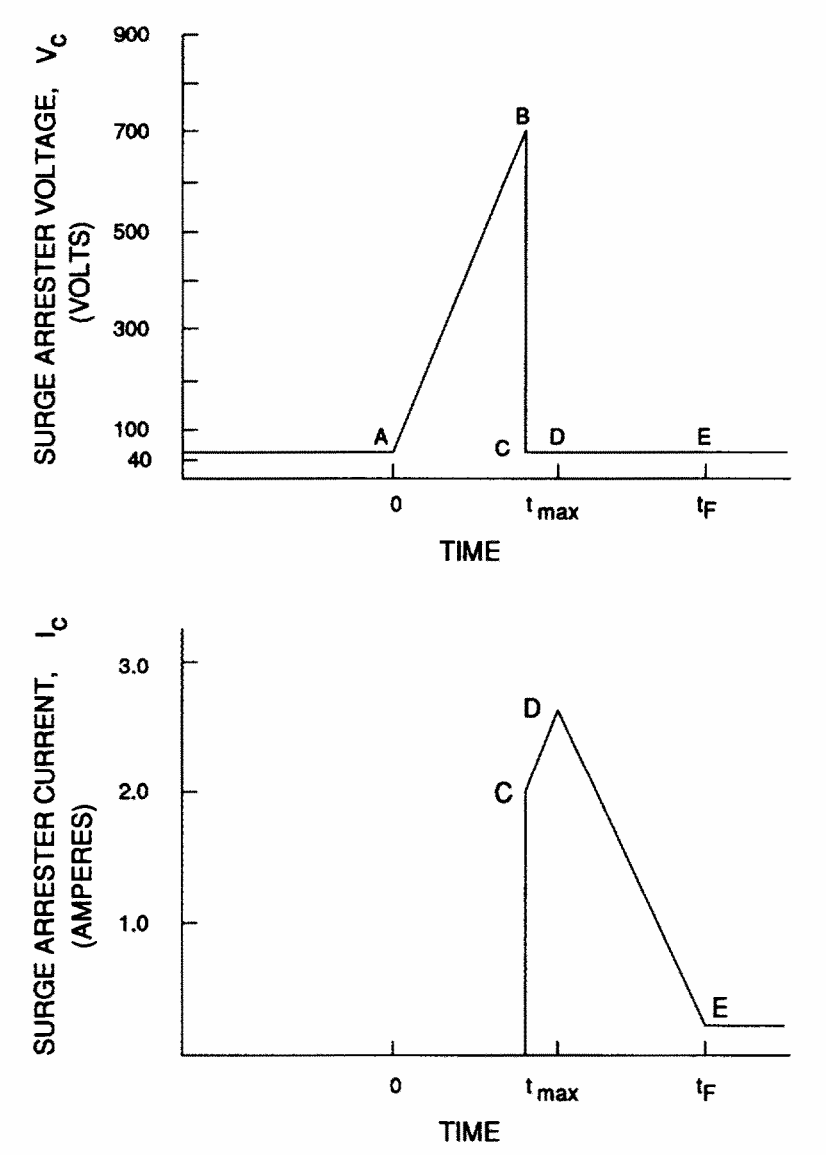

Figure B.4—Surge arrester voltage and current for Figure B.3

Copyright © 2006 IEEE. All rights reserved.

Copyright The Institute of Electrical and Electronics Engineers, Inc.
Provided by IHS under license with IEEE
No reproduction or networking permitted without license from IHS
Not for Resale

Annex C

(informative)

Examples of applications of MOVs

The following are examples of considerations in the selection and application of MOVs and generic examples of problems where MOVs can be used to provide surge protection. These examples are intended for illustrative purposes only. Since the purpose of each example is limited, each may be incomplete in many respects. Therefore, these examples are not intended to be used as design criteria in the selection and use of MOVs in actual applications, nor should they be interpreted as being recommendations on how to apply MOVs.

Examples of selection considerations

Example 1: Selection for AC power circuit applications

The purpose of this example is to illustrate considerations in selecting MOVs used in low-voltage surge protector, also called transient voltage surge suppressor (TVSS), applications on the load side of the main overcurrent protection. These may include standard tests for clamping voltage performance and tests for capability to withstand operating duty-cycle impulses, high surge currents and power frequency overvoltage. This example will consider MOVs permanently connected in short branch circuits, IEEE Std C62.41-1991 Category B, and in service entrance locations. The scope does not include rf noise filtering, if any, due to the capacitance of MOVs.

(A) Voltage rating selection.

The first step in selecting a MOV is to find a suitable voltage rating. As described in 8.3.4 of this guide, the rated rms voltage Vm(ac) of the MOV preferably should exceed the nominal service voltage by at least 20%, or should satisfy an applicable standard for power frequency overvoltage withstand capability, if greater. For example, if the nominal service voltage is 120 V, then the preferred MOV rating is at least 145 V; i.e., a standard component rating of 150 V should be selected. Approved safety practices for overcurrent protection, thermal protection and packaging of the circuit also should be followed.

(B) Clamping voltage prediction.

The expected clamping voltage performance can be found by constructing a V-I graph similar to Figure 16. See 8.3.2 for a more detailed description of the considerations and procedure involved. Note that larger diameter MOVs tend to clamp at lower voltages than smaller ones. The user should select the size that best fits the space, cost and performance goals of the application. Predicted values of clamping voltage should be verified by testing.

(C) Selection for surge current withstand and operating duty-cycle capability.

Physical size affects the rated ability of MOVs to withstand high current surges and operating duty-cycle tests. Users should select diameters with ratings adequate to withstand the sum of the surge exposure in the testing sequence. For example, suppose that 20 mm and 32 mm sizes are selected respectively for short branch circuit and service entrance locations, and that these components have pulse ratings shown in Figure C.1a) and Figure C.1b). Assume that the test sequence requires combination wave impulses from a 6 kV source: operating duty-cycle test short circuit currents of 0.75 kA and 3 kA respectively, short circuit surge test currents of 3 kA and 10 kA (20 kV source). Actual peak currents will be approximately 10% less due to the effect of the voltage drop across the varistor; see Figure 16. By reference to Figure C.1a) and Figure C.1b), the percentage of pulse rated life consumed by each test can be determined and

Copyright © 2006 IEEE. All rights reserved.
--`,,```,,,,````-`-`,,`,,`,`,,`---
Copyright The Institute of Electrical and Electronics Engineers, Inc.
Provided by IHS under license with IEEE
No reproduction or networking permitted without license from IHS
Not for Resale

listed in a table like Table C.1. The table shows that the sizes selected have sufficient pulse rating.

Table C.1—Consumption of MOV pulse ratings in duty-cycle and surge current withstand tests

Test or rating		Short branch circuit 20 mm Size	Service entrance 32 mm Size
Operating duty-cycle current, 8/20	(kA)	0.7	2.7
Number of impulses	(n)	24	24
Rated number surges	(n)	100	70
Rated life consumed	(%)	24	34
Withstand test surge current, 8/20	(kA)	2.7	9.7
Number of impulses	(n)	2	2
Rated number surges	(n)	4	3
Rated life consumed	(%)	50	67
Total rated life consumed	(%)	74	100

NOTE—Test standards might not specify a time between test surges. To ensure that the rated transient average power dissipation $P_{t(AV)}$ of MOVs is not exceeded, at least 30 s should be allowed between duty-cycle pulses and 2 min between surge withstand pulses in this example.

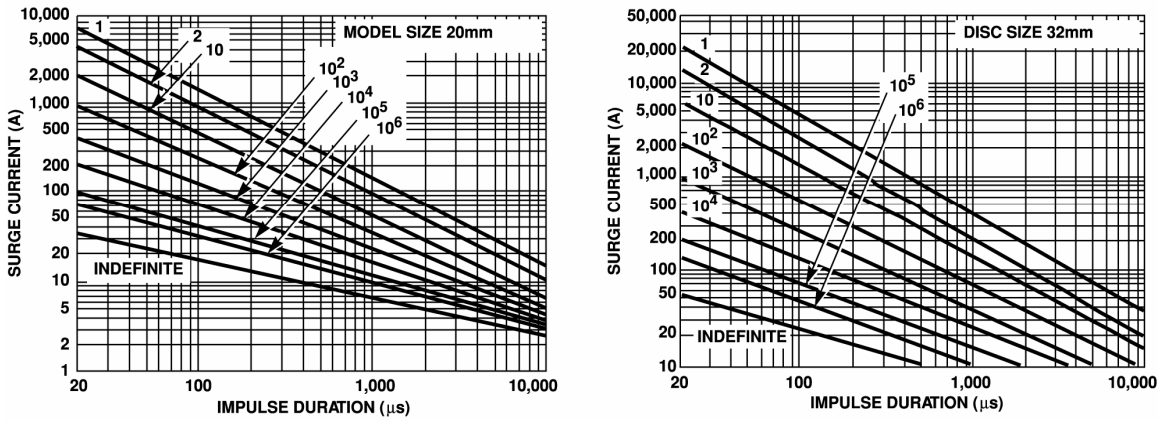

(a) **(b)**

Figure C.1—Typical MOV pulse rating: a) 20 mm, b) 32 mm

NOTE—Reprinted with permission from Littelfuse, Inc. [B24]

Example 2: Selection for telecommunications/dataline applications

Varistors can be used in selective telecommunication applications. Figure C.2 shows the use in a typical single-line telephone. Varistor V1 is intended to provide line protection, and the rated varistor voltage must be sufficiently high to assure that the varistor does not operate (clamp) as a result of voltages that normally appear on the telecommunications network. In a different part of this circuit, varistors V2 and V3 are provided to reduce acoustical shock.

Copyright © 2006 IEEE. All rights reserved.

Copyright The Institute of Electrical and Electronics Engineers, Inc.
Provided by IHS under license with IEEE
No reproduction or networking permitted without license from IHS
Not for Resale

In the example shown, the varistors provided serve as other than primary protectors. It should be noted that in certain applications NFPA 70, 2005 Edition (NEC) requires that a primary protector be placed electrically ahead (with regard to incoming wiring) of the product. Therefore, it is important that the correct varistors are selected, so that proper coordination exists between the surge protection included in the product and any primary protection provided.

When choosing a varistor for telecommunications equipment used on the subscribers side of the network demarcation point, FCC Regulations [B11] should be considered for equipment used in the U.S. In all cases the requirements of applicable safety standards should be considered.

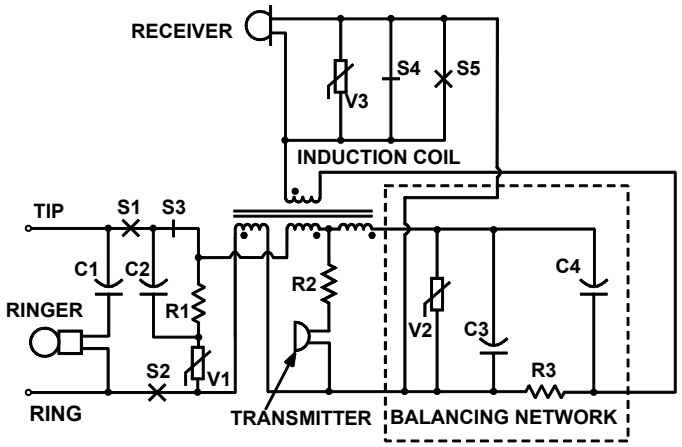

Figure C.2—Typical type single line telephone (excludes dial circuity)

NOTE—User applications may require overcurrent and/or thermal protection devices, not shown in figures.

Example 3: Selection for automotive application

Varistors are frequently applied for surge protection of electronic equipment operating at voltage levels below that of low-voltage ac power distribution. Automotive vehicles are a unique case because they generate their own dc power rather than converting it from commercial ac sources. This leads to some special requirements.

The concern for surge protection in vehicles is related to the growth of sophisticated microprocessor based electronic control systems on board. First applied to help reduce the emission of pollutants from engines these systems have now taken over many other tasks including spark timing, anti-skid braking and diagnostic testing. Upset or damage to semiconductor devices could occur without protection.

The Society of Automotive Engineers (SAE) publishes a series of standards (see [B31]) relevant to the surge environment and testing. Additionally, motor vehicle makers and major electrical systems makers may apply special requirements of their own. Electronic systems and components must be capable of withstanding severe environmental conditions with respect to mechanical shock, vibration and temperature variation as well as surges. Users should refer to the particular specifications which may apply.

Surges in automotive vehicles may be classified into three broad categories. First, most surge voltages originate in switching events which involve inductive loads such as relays, solenoids, the ignition coil or parasitic inductances. These surges directly impinge upon connected semiconductor devices such as a power transistor that might drive an electric clutch for the air conditioning compressor. Secondly, mutual coupling mechanisms can propagate surges onto other parts of the vehicle wiring harness, and the harness can also pick up radiated surges or noise emanating from sources external to the vehicle. Hence, unprotected sensitive devices can be affected even if seemingly remote from a surge source. Thirdly, the vehicle alternator can produce the surge called “load dump.” This surge has potential for

Copyright © 2006 IEEE. All rights reserved.

Copyright The Institute of Electrical and Electronics Engineers, Inc.
Provided by IHS under license with IEEE
No reproduction or networking permitted without license from IHS
Not for Resale

severe damage to vehicle electronics due to its long duration. It is the automotive surge most different from surges encountered elsewhere and therefore given benefit of further description here.

As shown in Figure C.3, the basic elements of a vehicle electrical system include a three phase alternator with full wave bridge rectifier, voltage regulator, battery, starter, an ignition circuit, lights and other loads, and sensor based sensitive electronic systems. When loads are switched off the alternator and regulator require time to readjust. The temporary excess output normally is easily absorbed by the battery. However, if the battery connections fail the "load dump" surge could fall on the electronics.

The load dump surge has a relatively slow rising, long duration waveform that is effectively unimpeded by wiring inductances. This means that electronic systems gain no protection from rf filters, but also that a single centrally located varistor can protect against this surge.

Figure C.4 illustrates the instantaneous power output of a sample automobile alternator when its available output was disconnected. The resulting load dump surge was diverted by a 20 mm size custom varistor with clamping voltage of 40 V maximum at 40 A. Note that the time for the surge through the varistor to decay to half value was about 38 ms. The surge energy dissipated in the varistor can be found by integrating the instantaneous power over time. It also can be approximated by the calculation $W = kV_cI_pt$; where W is the energy, k is a waveform factor with value 1.4, V_c is clamping voltage of 40 V, I_p is peak current of 40 A and t is surge impulse duration of 0.038 s. The calculation yields a value of 85 J.

An important consideration for varistors in this application is that they may be exposed to a dc overvoltage of 24 V for up to 5 min, when disabled vehicles are jump started from portable generators used by road service operators. Hence, the lowest suitable varistor voltage will be limited by this factor rather than the nominal vehicle voltage of 13.5 V.

Automotive environments can experience a wide operating temperature range, from −40 °C up to +125 °C. Varistor clamping voltages are little affected by temperature, but dc standby current can vary significantly. See 8.3.5.

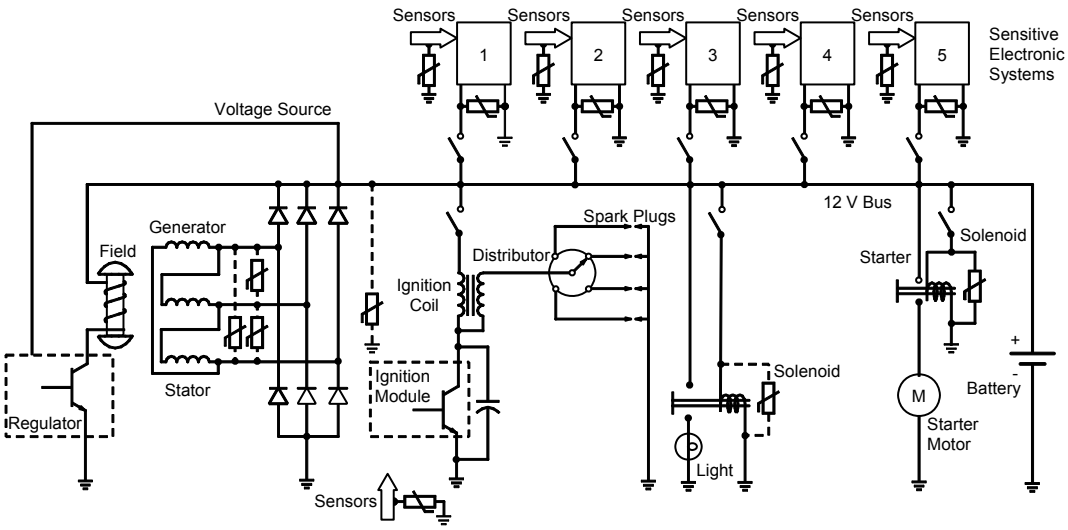

Figure C.3—Simplified automotive electrical system

Copyright © 2006 IEEE. All rights reserved.

Copyright The Institute of Electrical and Electronics Engineers, Inc.
Provided by IHS under license with IEEE
No reproduction or networking permitted without license from IHS
Not for Resale

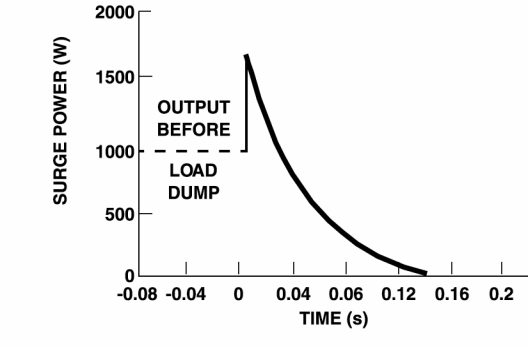

Figure C.4—Alternator power output into a central suppressor

NOTE— Reprinted with permission from Littelfuse, Inc. (see Figure 2a) in [B20])

Example 4: Selection for series or parallel combination

(A) Series combination.

Manufacturers generally offer a line of varistor ratings such that a suitable voltage can be selected from stock items. Should a particular application require higher voltages than available, or some value between stock ratings, it is permissible to make a series combination. The devices should be of the same nominal diameter and same rated pulse current. The V-I characteristics of the combination will be the sum of those of individual parts.

(B) Parallel combination.

The purpose of paralleling devices is to share surge current among them. In contrast to series combination, the parallel combination of varistors requires careful design consideration and possibly extensive testing. The degree of care and the extensiveness of the testing will depend on how critical it is that current be equally divided between the varistors. That, in turn, depends on the surge current handling capability of each varistor relative to the potential surge currents in the application. However, because of the high nonlinearity of the V-I characteristic there is a tendency for the device having the lowest clamping voltage to divert most of the current. It is important to match devices accurately, at the high end of the V-I characteristic, to obtain reasonable current sharing between devices. Voltage matching at one test current does not necessarily assure a match at other currents. The devices must be similar in nonlinear exponent, see 8.3.14, or the voltages will follow different V-I curves. Also, the series bulk resistance (R_{ON}), see Figure 13, plays a crucial role in the sharing of high currents. Devices should be matched in R_{ON} as well as other internal parameters. Unfortunately, R_{ON} is imbedded within the device and is not directly measurable.

Voltage matching throughout a current range could be assured by testing and matching devices in dynamic impedance, see 8.3.15. However, at least two high current tests would be required. This expense would be acceptable only in some special applications.

A simpler approach to current sharing is to define a narrower tolerance for nominal varistor voltage. At the same time manufacturing process controls must enhance uniformity of nonlinear exponent and R_{ON} parameter values within a single batch. A current sharing capability of about ± 20% has been reported for this method (see Wolff 1989 [B37]). Regardless of the technique used for V-I matching, success might be achieved if a few simple rules are observed. For the best inherent match the devices should be of the same type, size, manufacturer, shipment, date code, lot code and carton. Consult the manufacturer.

Copyright © 2006 IEEE. All rights reserved.

Copyright The Institute of Electrical and Electronics Engineers, Inc.
Provided by IHS under license with IEEE
No reproduction or networking permitted without license from IHS
Not for Resale

Generic examples of problems where MOVs are used to solve the problem.

Example 1: Elimination of showering arc surges and RF noise

Summary of a problem:

A showering arc commonly occurs when a mechanical switch opens in a circuit having an appreciable inductive load (see Standler 1989 [B32]). In the example below (see Littelfuse [B23]) the switching of a small timer motor on 120 V, 60 Hz mains causes serious malfunctions of an electronic device operating from the same power line.

How varistors are used to solve the problem:

The test circuit shown in Figure C.5 simulates motor impedance by R1, L1 and C1, and ac line impedance by L2 and C2. A dc power source allows repeatable observations. As switch S1 is opened the waveforms in Figure C.6 (without varistor) and Figure C.7 (with varistor) is recorded.

Without a varistor surge voltages are up to 1020 V (upper trace) and rf noise up to 32 V (lower trace). A varistor eliminates the arc by holding the surge voltage below the gap breakdown voltage (about 300 V).

Special considerations:

A diode detector is used to observe the voltage developed across a 5 cm (2 in) length of wire (50 nH of inductance).

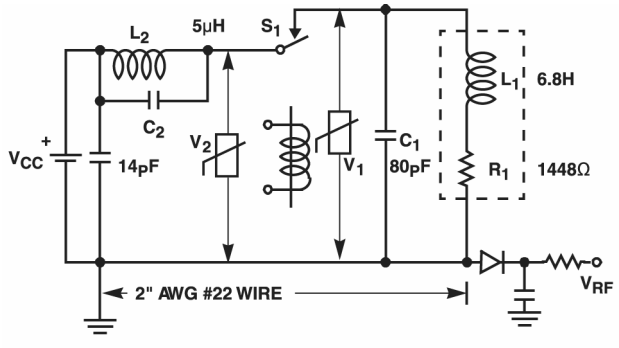

Figure C.5— Test circuit (with varistor)

NOTE—Reprinted with permission from Littelfuse, Inc. (see Figure 11 in [B23])

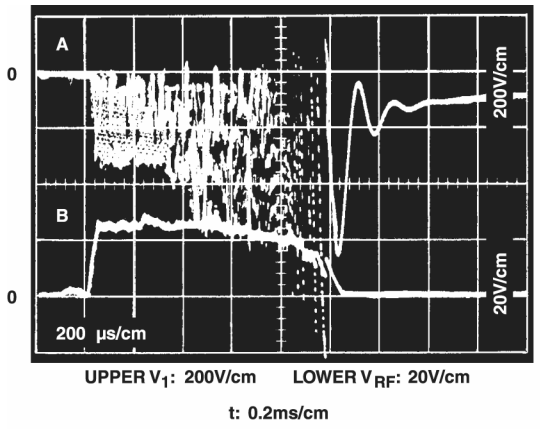

Figure C.6— V_1 without varistor

NOTE—Reprinted with permission from Littelfuse, Inc. (see Figure 12 in [B23])

Copyright © 2006 IEEE. All rights reserved.

Copyright The Institute of Electrical and Electronics Engineers, Inc.
Provided by IHS under license with IEEE
No reproduction or networking permitted without license from IHS
Not for Resale

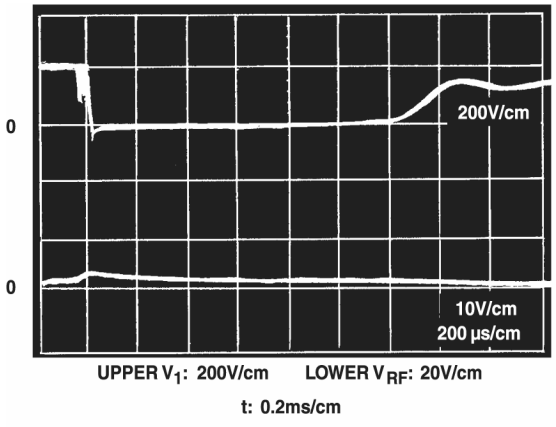

Figure C.7— V_1 with varistor

NOTE— Reprinted with permission from Littelfuse, Inc. (see Figure 13 in [B23])

Example 2: Protection of relay contacts from switching surges

Summary of a problem:

The arcing of mechanical contacts switching inductive loads, as in Figure C.8—, is destructive to the contacts. In this example (see Littelfuse, Inc. [B23]), the initial breakdown voltage of the contacts is less than twice the supply voltage, as indicated in Figure C.9. Although a snubber network with a 220 nF capacitor and 10 Ω resistor suppresses arcing completely, the capacitor is physically large. A smaller capacitor of 47 nF causes arcing to start at 70 V.

How varistors are used to solve the problem:

The breakdown level of the contacts increases with time as the contacts separate. A varistor with a $V_{m(dc)}$ rating of 31 V is placed in parallel with the snubber network across the contacts, which clamps the voltage to 66 V and below the breakdown level of 70 V.

Special considerations:

With ac power relays the impedance of a single large R-C suppressor might be so low that it would allow too much current to flow when the contacts are open. The combination of a small R-C with a varistor is more cost effective and reliable than using a large capacitor.

Copyright © 2006 IEEE. All rights reserved.
--`,,```,,,,````-`-`,,`,,`,`,,`---
Copyright The Institute of Electrical and Electronics Engineers, Inc.
Provided by IHS under license with IEEE
No reproduction or networking permitted without license from IHS
Not for Resale

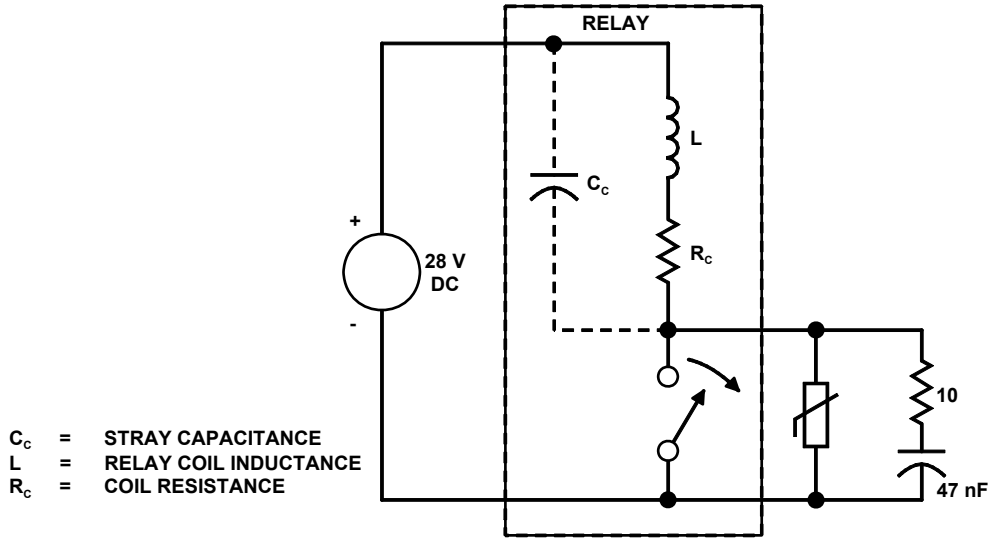

Figure C.8—Relay circuit

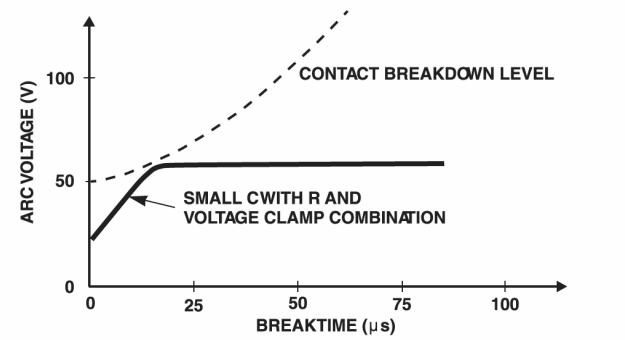

Figure C.9—Arc suppression

NOTE 1—Reprinted with permission from Littelfuse, Inc. (see Figure 10b) in [B23])

NOTE 2—User applications may require overcurrent and/or thermal protection devices, not shown in s.

Example 3: Protection of transistors switching inductive loads

Summary of a problem:

Semiconductor devices switching off inductive loads can be damaged by the surge voltage and current thereby created (see Standler 1989 [B32]). In the example of Figure C.10 (see Littelfuse, Inc. [B23]), a transistor operates a solenoid as frequently as once per second. When the transistor is switched off the inductor causes collector voltage breakdown and forces current to flow. The energy stored in the inductive field is dissipated in the transistor junction under reverse bias condition and results in excessive heating.

How varistors are used to solve the problem:

Shunting the transistor with a varistor, Figure C.10b), reduces the demands upon the safe operating area (SOA) power dissipation of the transistor. Because the surge voltage is kept below the transistor's breakdown level, all energy is dissipated in the varistor.

Copyright © 2006 IEEE. All rights reserved.

Copyright The Institute of Electrical and Electronics Engineers, Inc.
Provided by IHS under license with IEEE
No reproduction or networking permitted without license from IHS
Not for Resale

Special considerations:

A transistor also could be protected by a varistor connected collector-to-base (C-B) so that a surge turns the transistor into the on state where it can safely dissipate limited amounts of energy. By contrast, although a varistor connected C-E might be larger than one connected C-B, since it is required to absorb more energy, it in turn might allow the use of a transistor with a smaller SOA.

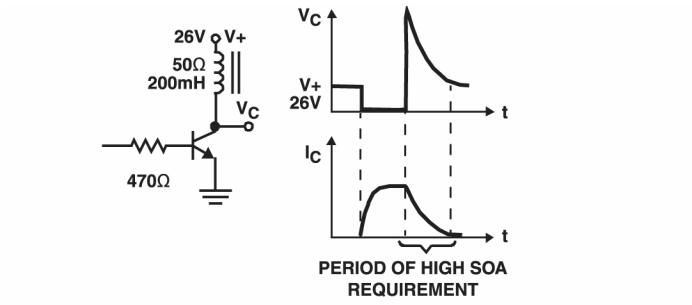

(a)

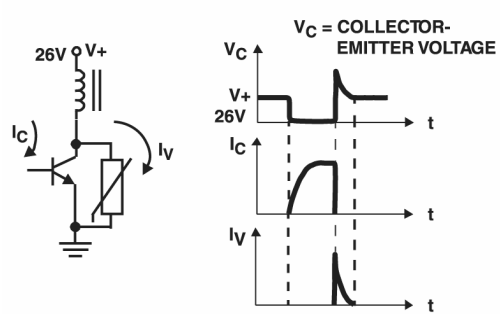

(b)

Figure C.10—Transistor switching of an inductive load: (a) Basic solenoid circuit, (b) Solenoid circuit with varistor protection

NOTE 1—Reprinted with permission from Littelfuse, Inc. (see Figure 14a) and 14b) in [B23])

NOTE 2—User applications may require overcurrent and/or thermal protection devices, not shown in figures.

Example 4: Protection against overvoltage produced by fuse opening

Summary of a problem:

Inductance in the conductors of the power distribution network can be a source of damaging surges (see Standler 1989 [B32]). Figure C.11 is a simplified schematic for illustrating this type of overvoltage.

Copyright © 2006 IEEE. All rights reserved.

Copyright The Institute of Electrical and Electronics Engineers, Inc.
Provided by IHS under license with IEEE
No reproduction or networking permitted without license from IHS
Not for Resale

How varistors are used to solve the problem:

Varistors placed upstream of the fuse will clamp the surge voltage. They must be able to absorb the surge energy.

Special considerations:

It has been shown (see Meissen 1983 [B29]) that the duration of the surge (measured at the time the voltage was half the peak value) is often between about 150 µs and 1000 µs. Most of the surges have a peak value that is less than 3 times the amplitude of the normal mains voltage, but a few are as large as 10 times the amplitude. See IEEE Std C62.41-1991 for a recommended optional test surge for equipment testing.

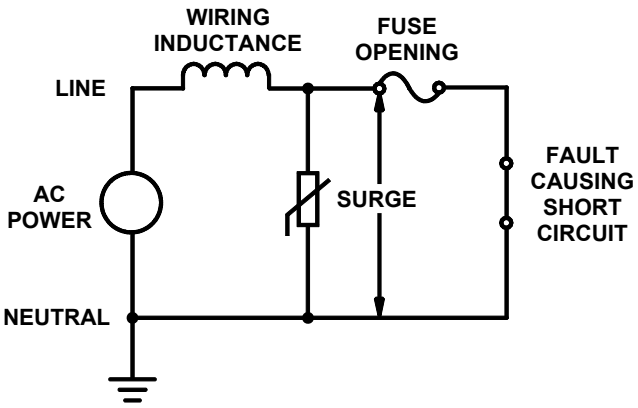

Figure C.11—Protection against fuse opening surge

NOTE—User applications may require overcurrent and/or thermal protection devices, not shown in figures.

Example 5: Protection against equipment malfunction and damage caused by surges

Summary of a problem:

Components on a printed circuit board and associated thyristors (SCRs) controlling an ac power conditioner fail in service. The circuit's function is to electronically change power tap connections on a shielded isolation transformer, see Figure C.12 Surge voltages cause the signal comparator to toggle falsely and the microcomputer to send false gate signals to the SCRs. This causes a unit to fail due to SCR double tapping.

How varistors are used to solve the problem:

Varistors of 14 mm size and 130 V rating are installed between phase and neutral to suppress surge voltages.

Special considerations:

For export versions of a power conditioner varistors with a $V_{m(ac)}$ rating of 275 V are used.

Copyright © 2006 IEEE. All rights reserved.

Copyright The Institute of Electrical and Electronics Engineers, Inc.
Provided by IHS under license with IEEE
No reproduction or networking permitted without license from IHS
Not for Resale

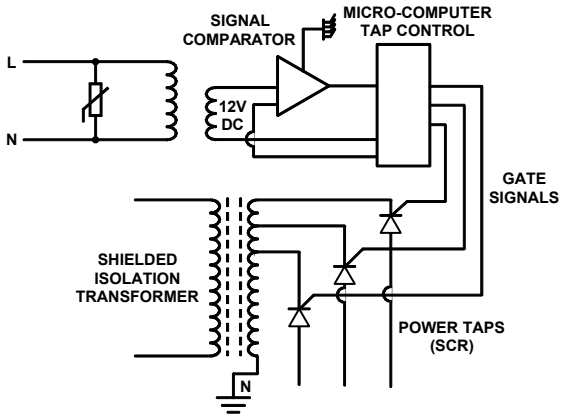

Figure C.12—AC power conditioner circuit

NOTE—User applications may require overcurrent and/or thermal protection devices, not shown in figures.

Example 6: Protection of sensitive electronics from switching surges generated by adjacent equipment

Summary of a problem:

At a point of sale cash register, an oscillating counter top display and an electronic cash register are plugged into different duplex outlet receptacles on the same branch circuit. As the rotor in the display cycled the display back and forth, surges are generated by the energy stored in circuit inductance and capacitance. These surges cause the electronic cash register to lockup.

How varistors are used to solve the problem:

The addition of three varistors connected as shown in the equivalent circuit of Figure C.13 protects the electronic cash register from surges.

Special considerations:

Varistors of 20 mm size are packaged in a surge-protective duplex receptacle retrofitted into the existing wall outlet for the electronic cash register. The $V_{m(ac)}$ ratings of the varistors are 150 V, which is more than 20% above the nominal mains voltage of 120 V. To reduce the possibility of surges on the ground line, the retrofit receptacle could be of the type using separate, isolated grounding wire.

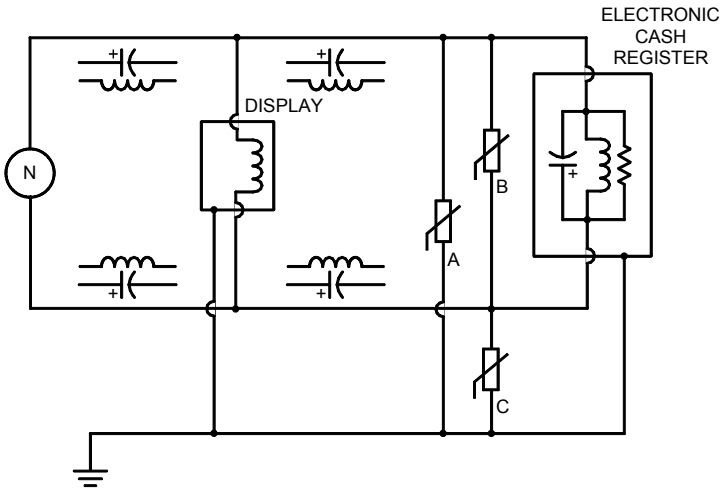

Figure C.13—Circuit with display and cash register

NOTE—User applications may require overcurrent and/or thermal protection devices, not shown in figures.

Copyright © 2006 IEEE. All rights reserved.

Copyright The Institute of Electrical and Electronics Engineers, Inc.
Provided by IHS under license with IEEE
No reproduction or networking permitted without license from IHS
Not for Resale

Example 7: Protection of telecom power supplies and equipment against lightning surges induced on the AC mains

Summary of a problem:

Lightning strikes to a radio tower cause damage to a digital switching system and transmission equipment within an adjacent telephone central office. See Figure C.14. The service entrance of the ac mains is surge protected by a MOV type secondary arrester. The ac branch enclosure serving the battery chargers is equipped with an older air gap type device.

How varistors are to solve the problem:

The auxiliary surge protection in the ac branch enclosure is updated from air gap to MOV technology. After this change, and other enhancements, lightning strikes to the tower again are observed, but no damage whatsoever occurs.

Special considerations:

Arresters installed in the ac branch enclosure are of a type designed for convenient mounting in a knockout hole of the enclosure.

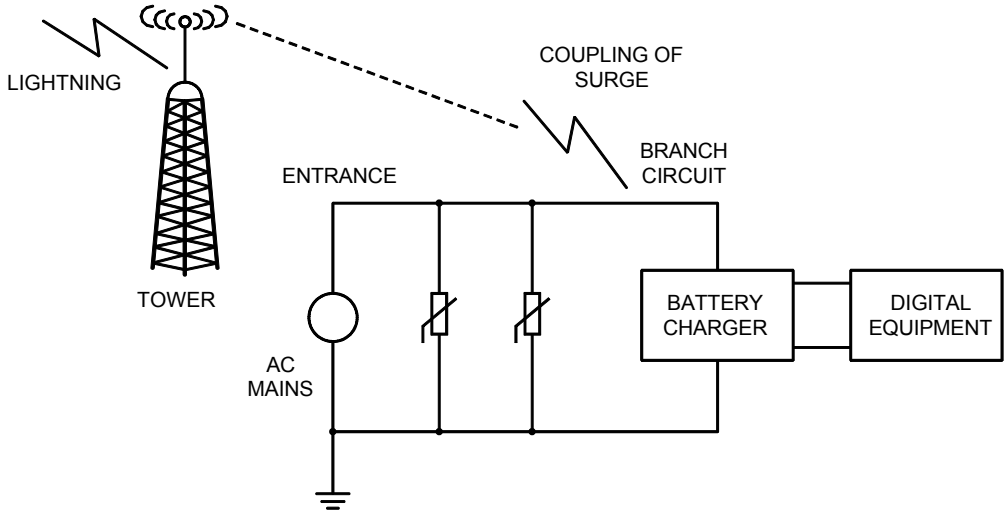

Figure C.14—AC power circuit to battery charger

NOTE—User applications may require overcurrent and/or thermal protection devices, not shown in figures.

Example 8: Protection of telecom pay phone power converter against long duration surges

Summary of a problem:

A problem occurs at the input power converter circuit of a pay telephone equipment when subjected to 10/1000 surges. Damage to the voltage regulating diodes is observed in most of the cases.

How varistors are to solve the problem:

Varistors are used in combination with resistors, R; see Figure C.15. The varistor in shunt across the input telecom line pair diverts the peak of the incoming surge. The resistance R blocks excessive current of the residual fast incoming surge front, solving the problem.

Copyright © 2006 IEEE. All rights reserved.

Copyright The Institute of Electrical and Electronics Engineers, Inc.
Provided by IHS under license with IEEE
No reproduction or networking permitted without license from IHS
Not for Resale

Special considerations:

The capacitance of the MOV is selected to a minimum value. The value of resistor R can be from 5 Ω to 25 Ω depending on the surge power capability of the regulator's diodes.

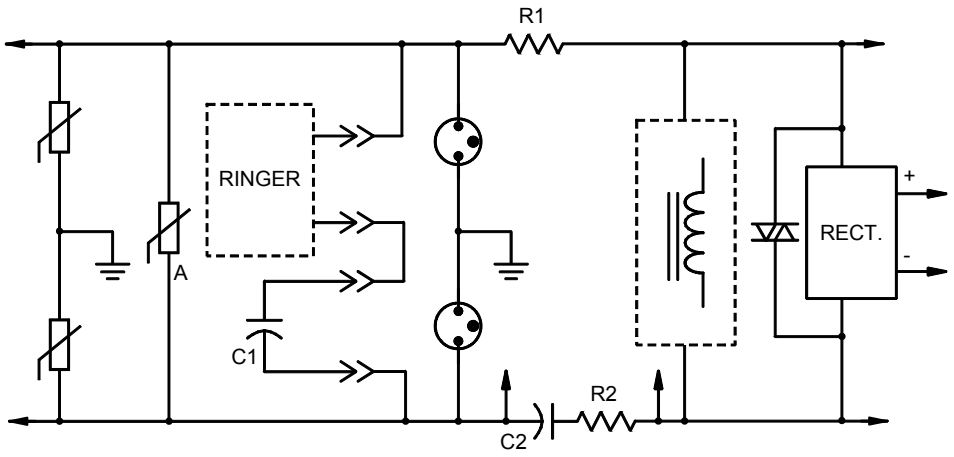

Figure C.15—Pay phone power converter circuit

NOTE—User applications may require overcurrent and/or thermal protection devices, not shown in figures.

Example 9: Protection of telephone line sealing circuit against lightning and other surges

Summary of a problem:

A current regulator circuit used on telephone line sealing current generators located in the central office of telephone companies is susceptible to electrical disturbances due to lightning and induced ac (a sealing current generator is used to pass a constant 20 mA through unused telephone lines in order to prevent or reduce corrosion). The surges could damage the transistors used in the current regulator circuit.

How varistors are used to solve the problem:

A MOV is placed across the incoming line (Ring) and ground to protect the circuit components; see Figure C.16. (Standard procedure is to ground the Tip conductor at the central office.)

Special considerations:

The MOV is selected so that it will not conduct excessively under normal operating conditions. The central office battery ranges from 48 V (dc) to 56 V (dc). The MOV must be protected from overheating if sustained overvoltage or other kinds of overstress occur.

Copyright © 2006 IEEE. All rights reserved.

Copyright The Institute of Electrical and Electronics Engineers, Inc.
Provided by IHS under license with IEEE
No reproduction or networking permitted without license from IHS
Not for Resale

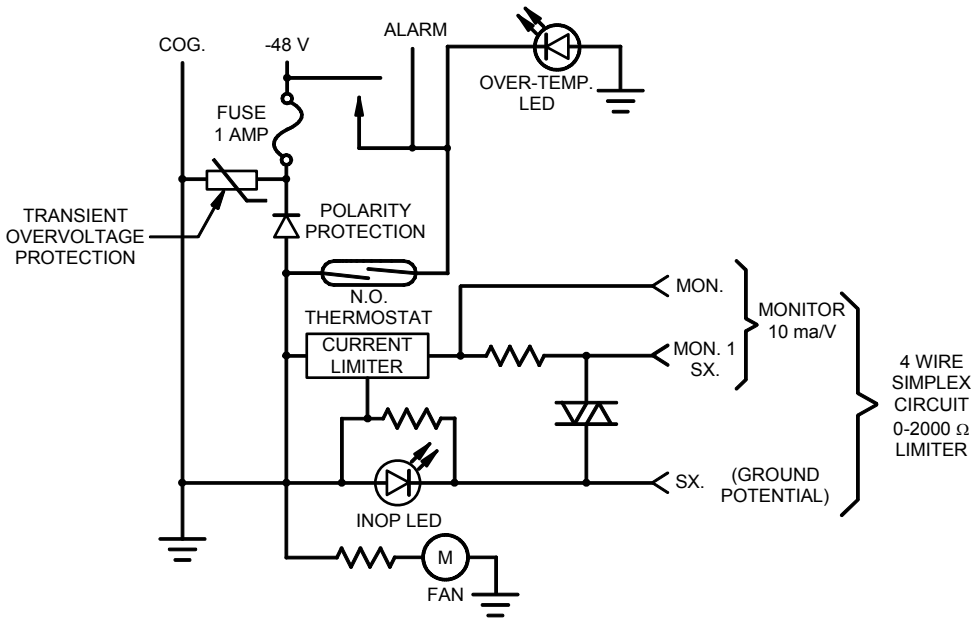

Figure C.16—Sealing current circuit schematic

NOTE—User applications may require overcurrent and/or thermal protection devices, not shown in figures.

Example 10: Protection of equipment from N-G and L-G surges

Summary of a problem:

The power supplies for microprocessor equipment operating from 120 V mains are subject to damage of the insulation of step-down transformers, even though MOVs are installed in line-to-neutral connection. Laboratory simulations show that surge currents diverted by a suppressor between line and neutral induce surge voltage in the neutral line (see Martzloff 1984 [B27]). Also, surges impinging on the ground line can induce ground-to-line and ground-to-neutral surges (see Martzloff 1987 [B26]). These can appear directly across insulation and cause breakdown. They can also be coupled capacitively into the sensitive electronics cause upset. See Figure C.17. Installing one more MOV in the circuit doesn't fully eliminate the problem whether the MOV is line-to-ground or neutral-to-ground. The breakdown voltage of some transformers is below 800 V.

How varistors are used to solve the problem:

The solution is to connect a MOV between each of the three line combinations: line and neutral, line and ground, neutral and ground (for simplicity, not shown in Figure C.17).

Special considerations:

Because power current voltage drops are absent on the grounding conductor, the L-G power frequency voltage could be higher than the L-N value. The rated rms voltage $V_{m(ac)}$ of the L-G MOV should be at least as high as the L-N device and preferably should exceed the nominal service voltage by at least 20%. See 8.3.4.

Copyright © 2006 IEEE. All rights reserved.

Copyright The Institute of Electrical and Electronics Engineers, Inc.
Provided by IHS under license with IEEE
No reproduction or networking permitted without license from IHS
Not for Resale

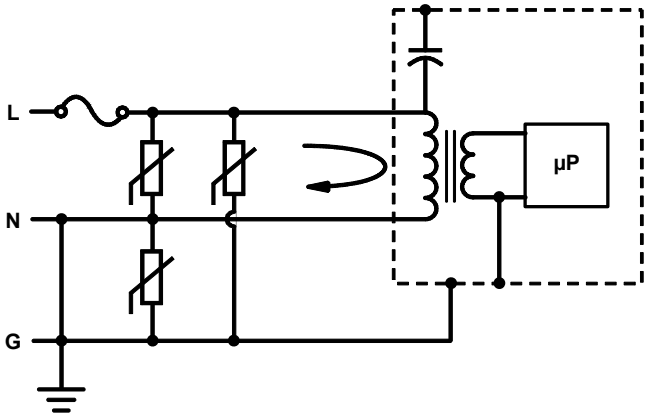

Figure C.17—Surges impinging on line and ground

NOTE—User applications may require overcurrent and/or thermal protection devices, not shown in figures.

Copyright © 2006 IEEE. All rights reserved.

Copyright The Institute of Electrical and Electronics Engineers, Inc.
Provided by IHS under license with IEEE
No reproduction or networking permitted without license from IHS
Not for Resale

Annex D

(informative)

Generic examples of surge problems that are solved by the application of avalanche junction semiconductor SPDs

The following are examples of problems that are solved by the application of avalanche junction semiconductor SPDs. These examples are generic and are intended for illustrative purposes only. Since the purpose of each example is limited, each may be incomplete in many respects. Therefore, these examples are not intended to be used as design criteria in the selection and use of devices in actual applications, nor should they be interpreted as being recommendations on how to apply avalanche junction semiconductor SPDs.

Example 1: Protection in an AC power circuit application (see Figure D.1).

Summary of a problem:

Induced lightning transients, defined by IEEE Std C62.41-1991, Category A, on the 120 Vac line, causes damage to the switching transistor in a Switch Mode Power Supply. Depending on upon the magnitude of the threat, that is, the transient current, the transistor fails short, open, or degrades in its performance.

How avalanche diodes are used to solve the problem:

Several series connected bi-directional avalanche diodes (ADs) are placed between line and neutral. The ADs divert the current and clamp the voltage protecting the switching transistor in the switch mode power supply.

Special Considerations:

Select the individual ADs so that the combined stand-off voltage [V (dc)] is 20% than the maximum regulated peak voltage of the ac power line. A small inductor (L) can be placed in the line to provide line impedance to reduce or limit the transient current to the AD. Fuse (see F1 in Figure D.1) is recommended to disconnect the stack of diodes in case of a diode failure.

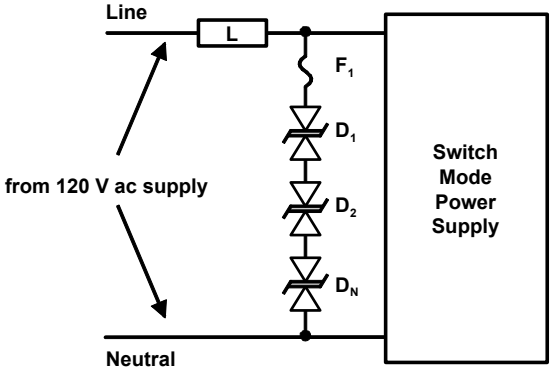

Figure D.1—120 Vac line protection

Copyright © 2006 IEEE. All rights reserved.

Copyright The Institute of Electrical and Electronics Engineers, Inc.
Provided by IHS under license with IEEE
No reproduction or networking permitted without license from IHS
Not for Resale

Example 2: Protection in a DC power circuit application (see Figure D.2)

Summary of a problem:

Transients on a 5.0 V (dc) line cause damage to an IC memory chip. Switching transients on the power line cause the input elements on the memory chip to fail short.

How avalanche diodes are used to solve the problem:

A unidirectional AD is placed between the two power supply (bus) pins of the memory providing protection against surges conducted or induced on the bus line. It is important to mount the AD as close as possible to the body of the IC component to reduce the effects of conducted radiation into the sensitive circuit.

Special Considerations:

Select the stand-off voltage of the AD such that it is 20% higher than the maximum regulated voltage of the dc power supply (bus) voltage.

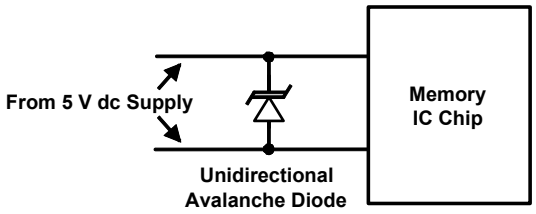

Figure D.2—5.0 V (dc) line protection

Example 3: Protection in a signal/data line application (see Figure D.3)

Summary of a problem:

Opto-couplers are damaged by high voltage ESD. The P–N junction of a light-emitting diode (LED) fails short or open if subjected to an ESD pulse of high voltage or current.

How avalanche diodes are used to solve the problem:

A unidirectional AD is selected such that the stand-off voltage is 10%–15% greater than the dc operating level of the unipolar opto-coupler, as in Figure D.3. This device limits the input voltage to the breakdown voltage of the AD in the reverse direction and limits the voltage to less than 1 or 2 volts in the forward direction providing protection for the LED against positive and negative transient threats. A bi-directional AD can also be used across a polar opto-coupler. The stand-off voltage is selected in a similar manner as for the unidirectional AD except in both polarities, positive and negative. The bi-directional AD limits the transient voltage in both polarities providing protection for the LED.

Special Considerations:

Select the ADs according to the peak pulse current handling capability equivalent to the transient threat conditions.

Copyright © 2006 IEEE. All rights reserved.

Copyright The Institute of Electrical and Electronics Engineers, Inc.
Provided by IHS under license with IEEE
No reproduction or networking permitted without license from IHS
Not for Resale

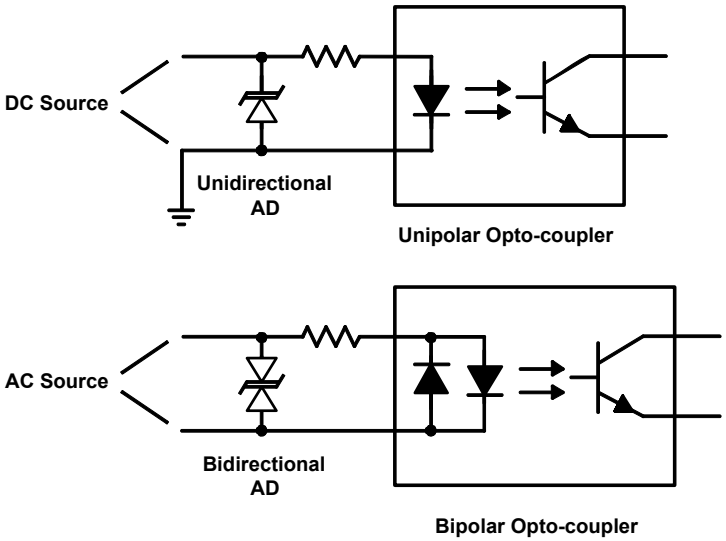

Figure D.3—Signal/data line protection

Example 4: Protection of Power bus lines (see Figure D.4).

Summary of a problem:

Transient induced on to a 200 V (dc) line cause damage to the output of the MOSFET in a switch mode power supply (SMPS). The transient causes a short circuit between the drain and source of the MOSFET when the dc supply is in the on condition.

How avalanche diodes are used to solve the problem:

A unidirectional AD is placed between the drain and source of the MOSFET to clamp the transient voltage and divert the peak pulse current to ground. The AD should be mounted as close as possible to the MOSFET to reduce surges from the power supply line.

Special Considerations:

Select the stand-off voltage of the AD 10% greater than the normal peak operating voltage of the power supply.

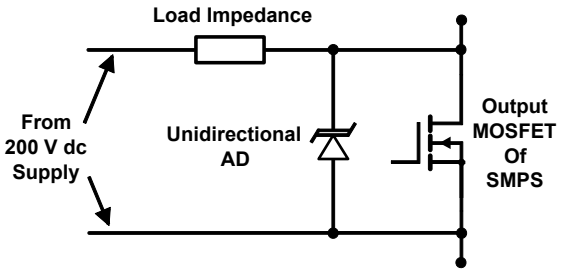

Figure D.4—200 V (dc) line protection

Copyright © 2006 IEEE. All rights reserved.

Copyright The Institute of Electrical and Electronics Engineers, Inc.
Provided by IHS under license with IEEE
No reproduction or networking permitted without license from IHS
Not for Resale

Example 5: Protection of Relay Coil Switch (see F)

Summary of a problem:

When a relay switch opens, the inductive kick back from the coil causes damage to the contacts. A high voltage surge in the form of an arc is observed between the contacts when switched open. The contacts of the switch are welded together after a number of operations.

How avalanche diodes are used to solve the problem:

An AD with a stand-off of 24 V is selected for a relay that is connected to an unregulated 18 V (dc) power supply. This device is capable of clamping the voltage below 25 V preserving the contacts for longer life

Special Considerations:

Select the stand-off of the AD to be 20% greater than the maximum voltage of the regulated dc voltage of the power supply.

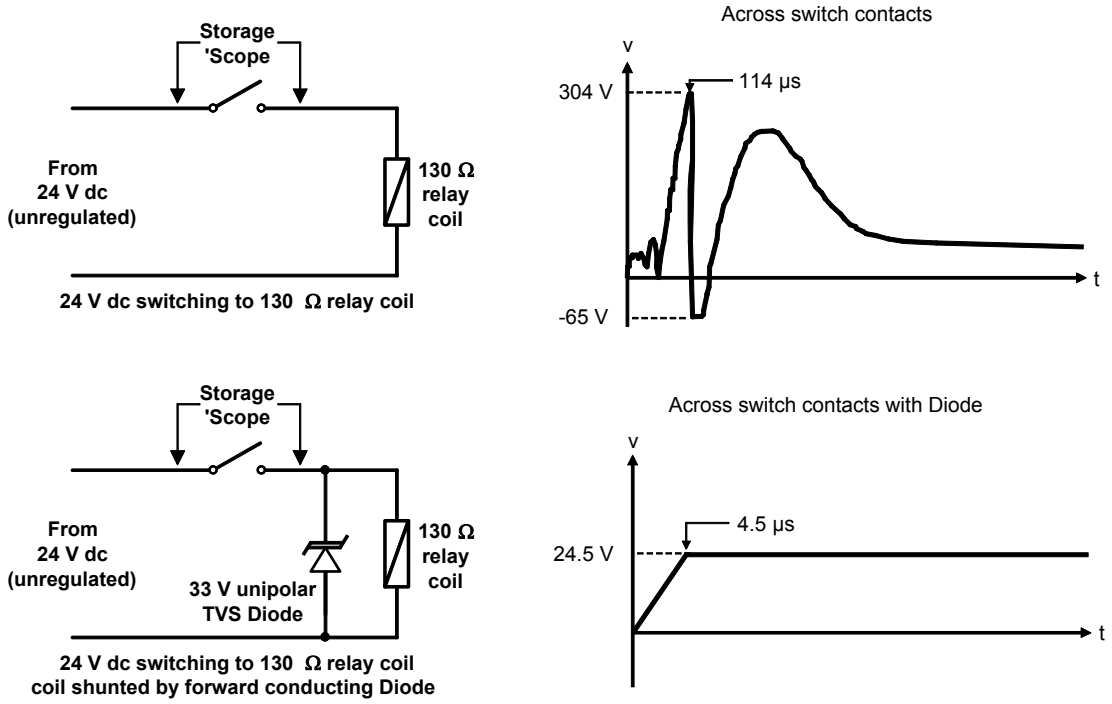

Figure D.5—Relay coil switch protection

Copyright © 2006 IEEE. All rights reserved.

Copyright The Institute of Electrical and Electronics Engineers, Inc.
Provided by IHS under license with IEEE
No reproduction or networking permitted without license from IHS
Not for Resale

Annex E

(informative)

Bibliography

[B1] Anderson, R. B. and Eriksson, E. J., "Lightning Parameters for Engineering Application," CIGRE, Electra, no. 69, pp. 65–101, Mar. 1980.

[B2] Bodle, D. W., Ghazi, A. J., Syed, M., and Woodside, R. L., Characterization of the Electrical Environment. Toronto and Buffalo: University of Toronto Press, 1976, pp. 14–15, 85–95, 124–130.

[B3] Cianos, N. and Pierce, E. T., A Ground Lightning Environment for Engineering Usage. Menlo Park, CA: Stanford Research Institute, Aug. 1972.

[B4] Cobine, J. D., Gaseous Conductors. New York: Dover Publications Inc., 1958, pp. 143–168.

[B5] Demircioglu, S., Dinnin, A.J. and Morin, P.L., "Improved Electrical Protection Scheme for Digital Carrier Systems," National Telecommunications Conference, 1978, IEEE CM 1354-0/78/0000-0210.

[B6] Druyvesteyn and Penning, Rev MO1 PHYS-VR no. 2, Kiemperer 2 Tech Pltys Van Voorhs Pay Rev 25 583.

[B7] Electrical Protection Fundamentals, Rural Electrification Administration, Telecommunications Engineering and Construction Manual Section 801, Oct. 1982, U.S. Dept. of Agriculture, REA, Washington, DC, p. 8.

[B8] EMP Engineering Practices Handbook, 1977, NATO File #1460-2.

[B9] EMP Protection for Emergency Operating Centers, TR-61-A, Defense Civil Preparedness Agency, Dept. of Defense, USA, 1972.

[B10] EMP Protective Systems, TR-61-B, Defense Civil Preparedness Agency, Dept. of Defense, USA, July 1972.

[B11] Federal Communications Commission (FCC) CFR 68, Connection of Terminal Equipment to the Telephone Network (1997).

[B12] Global Atmospherics, Inc., Tucson, AZ.

[B13] IEC 61312-1, Protection against lightning electromagnetic Impulse- Part 1: General Principles.

[B14] IEEE 100™, *The Authoritative Dictionary of IEEE Standard Terms*, Seventh Edition.

[B15] International Electrotechnical Commission, Requirements for ESD, IEC Publication 801-2, First Edition.

[B16] International Special Committee on Radio Interference (CISPR), Emission and Immunity, Publication CISPR-22.

[B17] Klewe, H. R. J., by Drukkern Hooiberg, N.V., EPE-Netherlands, Interference between Power Systems and Telecommunications Lines. London: Edward Arnold Publishers, Ltd., 1958.

Copyright © 2006 IEEE. All rights reserved.

Copyright The Institute of Electrical and Electronics Engineers, Inc.
Provided by IHS under license with IEEE
No reproduction or networking permitted without license from IHS
Not for Resale

[B18] Lerner, E. J., " Electromagnetic Pulses-Potential Crippler," IEEE Spectrum, vol. 18, no. 5, pp. 41–46, May 1981.

[B19] Lightning and 60 Hz Disturbances at the Bell Operating Company Network Interface, Technical Reference TR-EOP-000001 Issue 2, 1987, Bell Communications Research.

[B20] Littelfuse Application Note AN9312.5; July, 1999.

[B21] Littelfuse Application Note AN9767.1; July, 1999.

[B22] Littelfuse Application Note AN9773; January, 1998.

[B23] Littelfuse Application Note EC638; January, 2002.

[B24] Littelfuse Electronic Designers Guide EC101.1; May, 2004.

[B25] Martzloff, F. D., "Matching Surge Protective Devices to Their Environment." IEEE Transactions on Industry Applications, Vol. IA-21. No.1, January/February 1985.

[B26] Martzloff, F. D., "Power Quality Site Surveys: Facts, Fiction, and Fallacies." Conference Record of the IEEE I&CPS Technical Society, Nashville TN, May 4-7, 1987.

[B27] Martzloff, F. D., The Propogation and Attenuation of Surge Voltages and Surge Currents in Low-Voltage AC Circuits, IEEE Power Engineering Review, January 1984.

[B28] Martzloff, F. D. and Hahn, G. J., "Surge Voltage in Residential and Industrial Power Circuits," IEEE Transactions on Power Apparatus and Systems, vol. PAS-89, pp. 1049–1056, July/Aug. 1970.

[B29] Meissen, W. "Uberspannungen in Neiderspannungsnetzen." ("Overvoltages in Low-Voltage Networks.") Electrotechnische Zeitschrift, vol. 104, 1983.

[B30] Sandia Laboratories Report Sand95-1551/1. UC-706 Triggered Lightning Test Program: Measured Responses of a Reinforced Concrete Building Under Direct Lightning Attachments, 1995.

[B31] Society of Automotive Engineers SAE J1113 series of standards covering electromagnetic compatibility.

[B32] Standler, R. B., Protection of Electronic Circuits from Overvoltages, John Wiley & Sons, 1989.

[B33] Sunde, E. D., Earth Conduction Effects in Transmission Systems. New York: Dover Publications, Inc., 1968, pp. 268–298.

[B34] UL 497, Underwriters Laboratories Inc., Protectors for Communication Circuits.

[B35] UL 497A, Underwriters Laboratories Inc., Secondary Protectors for Communications Circuits.

[B36] Vance, E. F., Electromagnetic Pulse Handbook for Electric Power Systems. Menlo Park, CA: Stanford Research Institute.

[B37] Wolff, B. I., "Matching Surge Suppressors for Current Sharing." Proceedings, Eighth International Zurich Symposium on EMC, March 1989.

--`,,```,,,,````-`-`,,`,,`,`,,`---
Copyright © 2006 IEEE. All rights reserved.

Copyright The Institute of Electrical and Electronics Engineers, Inc.
Provided by IHS under license with IEEE
No reproduction or networking permitted without license from IHS
Not for Resale