C57.13.3™

IEEE Guide for Grounding of Instrument Transformer Secondary Circuits and Cases

IEEE Power Engineering Society

Sponsored by the
Power Systems Relaying Committee

IEEE
3 Park Avenue
New York, NY 10016-5997, USA

8 May 2006

IEEE Std C57.13.3™-2005
(Revision of IEEE Std C57.13.3-1983)

Copyright The Institute of Electrical and Electronics Engineers, Inc.
Provided by IHS under license with IEEE
No reproduction or networking permitted without license from IHS

Not for Resale

and Electronics Engineers, Inc.
IEEE
itted without license from IHS
Not for Resale

Recognized as an
American National Standard (ANSI)

IEEE Std C57.13.3™-2005
(Revision of
IEEE Std C57.13.3-1983)

IEEE Guide for Grounding of Instrument Transformer Secondary Circuits and Cases

Sponsor

Power System Relaying Committee
of the
IEEE Power Engineering Society

Approved 20 March 2006

American National Standards Institute

Approved 8 November 2005

IEEE-SA Standards Board

Copyright The Institute of Electrical and Electronics Engineers, Inc.
Provided by IHS under license with IEEE
No reproduction or networking permitted without license from IHS
Not for Resale

Abstract: The scope of the guide includes the grounding practices presently used and the practices that were not previously reported. Specifically, the issue of the grounding of cases of electronic transducers is addressed.

Keywords: current transformer, grounding of cases of instrument transformers, grounding secondary circuits of instrument transformers, instrument transformer, low energy transducer, voltage transformer

---

The Institute of Electrical and Electronics Engineers, Inc.
3 Park Avenue, New York, NY 10016-5997, USA

Copyright © 2006 by the Institute of Electrical and Electronics Engineers, Inc.
All rights reserved. Published 8 May 2006. Printed in the United States of America.

National Electrical Safety Code and NESC are registered trademarks in the U.S. Patent & Trademark Office, owned by The Institute of Electrical and Electronics Engineers, Incorporated.

National Electrical Code and NEC are registered trademarks in the U.S. Patent & Trademark Office, owned by The National Fire Protection Association.

IEEE is a registered trademark in the U.S. Patent & Trademark Office, owned by the Institute of Electrical and Electronics Engineers, Incorporated.

Print: ISBN 0-7381-4852-0 SH95396
PDF: ISBN 0-7381-4853-9 SS95396

No part of this publication may be reproduced in any form, in an electronic retrieval system or otherwise, without the prior written permission of the publisher.

Copyright The Institute of Electrical and Electronics Engineers, Inc.
Provided by IHS under license with IEEE
No reproduction or networking permitted without license from IHS Not for Resale

IEEE Standards documents are developed within the IEEE Societies and the Standards Coordinating Committees of the IEEE Standards Association (IEEE-SA) Standards Board. The IEEE develops its standards through a consensus development process, approved by the American National Standards Institute, which brings together volunteers representing varied viewpoints and interests to achieve the final product. Volunteers are not necessarily members of the Institute and serve without compensation. While the IEEE administers the process and establishes rules to promote fairness in the consensus development process, the IEEE does not independently evaluate, test, or verify the accuracy of any of the information contained in its standards.

Use of an IEEE Standard is wholly voluntary. The IEEE disclaims liability for any personal injury, property or other damage, of any nature whatsoever, whether special, indirect, consequential, or compensatory, directly or indirectly resulting from the publication, use of, or reliance upon this, or any other IEEE Standard document.
The IEEE does not warrant or represent the accuracy or content of the material contained herein, and expressly disclaims any express or implied warranty, including any implied warranty of merchantability or fitness for a specific purpose, or that the use of the material contained herein is free from patent infringement. IEEE Standards documents are supplied "**AS IS**."

The existence of an IEEE Standard does not imply that there are no other ways to produce, test, measure, purchase, market, or provide other goods and services related to the scope of the IEEE Standard. Furthermore, the viewpoint expressed at the time a standard is approved and issued is subject to change brought about through developments in the state of the art and comments received from users of the standard. Every IEEE Standard is subjected to review at least every five years for revision or reaffirmation. When a document is more than five years old and has not been reaffirmed, it is reasonable to conclude that its contents, although still of some value, do not wholly reflect the present state of the art. Users are cautioned to check to determine that they have the latest edition of any IEEE Standard.

In publishing and making this document available, the IEEE is not suggesting or rendering professional or other services for, or on behalf of, any person or entity. Nor is the IEEE undertaking to perform any duty owed by any other person or entity to another. Any person utilizing this, and any other IEEE Standards document, should rely upon the advice of a competent professional in determining the exercise of reasonable care in any given circumstances.

Interpretations: Occasionally questions may arise regarding the meaning of portions of standards as they relate to specific applications. When the need for interpretations is brought to the attention of IEEE, the Institute will initiate action to prepare appropriate responses. Since IEEE Standards represent a consensus of concerned interests, it is important to ensure that any interpretation has also received the concurrence of a balance of interests. For this reason, IEEE and the members of its societies and Standards Coordinating Committees are not able to provide an instant response to interpretation requests except in those cases where the matter has previously received formal consideration. At lectures, symposia, seminars, or educational courses, an individual presenting information on IEEE standards shall make it clear that his or her views should be considered the personal views of that individual rather than the formal position, explanation, or interpretation of the IEEE.

Comments for revision of IEEE Standards are welcome from any interested party, regardless of membership affiliation with IEEE. Suggestions for changes in documents should be in the form of a proposed change of text, together with appropriate supporting comments. Comments on standards and requests for interpretations should be addressed to:

Secretary, IEEE-SA Standards Board
445 Hoes Lane
Piscataway, NJ 08854
USA

NOTE—Attention is called to the possibility that implementation of this standard may require use of subject matter covered by patent rights. By publication of this standard, no position is taken with respect to the existence or validity of any patent rights in connection therewith. The IEEE shall not be responsible for identifying patents for which a license may be required by an IEEE standard or for conducting inquiries into the legal validity or scope of those patents that are brought to its attention.

Authorization to photocopy portions of any individual standard for internal or personal use is granted by the Institute of Electrical and Electronics Engineers, Inc., provided that the appropriate fee is paid to Copyright Clearance Center. To arrange for payment of licensing fee, please contact Copyright Clearance Center, Customer Service, 222 Rosewood Drive, Danvers, MA 01923 USA; +1 978 750 8400. Permission to photocopy portions of any individual standard for educational classroom use can also be obtained through the Copyright Clearance Center.

Copyright The Institute of Electrical and Electronics Engineers, Inc.
Provided by IHS under license with IEEE
No reproduction or networking permitted without license from IHS
Not for Resale

Introduction

This introduction is not part of IEEE Std C57.13.3™-2005, IEEE Guide for Grounding of Instrument Transformer Secondary Circuits and Cases.

The primary emphases of this guide are personnel safety and proper performance of relays at the electric power system frequencies. The grounding and shielding of cables and other grounding considerations are not addressed. However, references dealing with these and related subjects are included in the bibliography (see Annex E).

Historically, it has been a common practice in the U.S. to connect the secondary circuits of current transformers (CTs) and voltage transformers (VTs) to the station ground. The present preferred practice is to locate a ground on the instrument transformer secondary circuit, along with suitable ground isolation test facilities, at the first point of application (switchboard or relay panel). The circuit ground isolation facilities make it convenient to test the integrity of the insulation from ground.

Previous publications have made significant contributions toward making the grounding practices more consistent in some areas. This guide includes the contributions that are generally practiced today, makes revisions where present experience and practice show them to be desirable, and suggests grounding techniques in new areas of interest. Diagrams are included to illustrate the grounding techniques.

This guide contains general and specific recommendations for grounding CT and VT secondary circuits and cases of connected equipment. The recommended practices apply to all transformers of this type, including capacitive VTs and linear couplers, irrespective of the voltage of the primary circuit or whether the primary windings are connected to the power circuits or are connected to the secondary circuits of other transformers, such as auxiliary CTs or VTs. Most diagrams included in this guide show relaying applications, but the practices are equally relevant to metering and other areas where instrument transformers are used.

Exceptions to grounding are permissible or are sometimes required when advantages obtained by not grounding, in certain instances or in certain types of installations, are considered to outweigh the safety or other advantages obtained by grounding. Such exceptions should comply with the recommendations of the National Electrical Safety Code® (NESC®) (Accredited Standards Committee C-2).[a]

Notice to users

Errata

Errata, if any, for this and all other standards can be accessed at the following URL: http://standards.ieee.org/reading/ieee/updates/errata/index.html. Users are encouraged to check this URL for errata periodically.

[a] For information on references, see Clause 2.

Copyright © 2006 IEEE. All rights reserved.

Copyright The Institute of Electrical and Electronics Engineers, Inc.
Provided by IHS under license with IEEE
No reproduction or networking permitted without license from IHS
Not for Resale

Interpretations

Current interpretations can be accessed at the following URL: http://standards.ieee.org/reading/ieee/interp/index.html.

Patents

Attention is called to the possibility that implementation of this standard may require use of subject matter covered by patent rights. By publication of this standard, no position is taken with respect to the existence or validity of any patent rights in connection therewith. The IEEE shall not be responsible for identifying patents or patent applications for which a license may be required to implement an IEEE standard or for conducting inquiries into the legal validity or scope of those patents that are brought to its attention.

Participants

At the time this guide was completed, the I-13--Revision of C57.13.3 Working Group had the following membership:

Mohindar S. Sachdev, *Chair*

Brian P. Mugalian, *Vice Chair*

John C. Appleyard
Martin F. Best
Albert N. Darlington
Ratan Das
Gerald E. Fenner
(Corresponding Member)
Charles Fink
Harley Gilleland
William G. Lowe
Subinoy Mazumdar
Peter G. McLaren
James M. O'Brien
R. Vittal Rebbapragada
Sahib M. Usman
Del D. Weers
Ray Young

Copyright © 2006 IEEE. All rights reserved.

Copyright The Institute of Electrical and Electronics Engineers, Inc.
Provided by IHS under license with IEEE
No reproduction or networking permitted without license from IHS
Not for Resale

The following members of the balloting committee voted on this guide. Balloters may have voted for approval, disapproval, or abstention.

William Ackerman
Mark Adamiak
David Aho
Steve Alexanderson
John C. Appleyard
Munnu Bajpai
Michael Baldwin
Ron Barker
Paul Barnhart
George Bartok
Gabriel Benmouyal
Martin F. Best
Wallace Binder
Thomas E. Blackburn, III
Stuart Bouchey
Gustavo Brunello
Jeff Burnworth
Carl Bush
Tommy Cooper
Jerry Corkran
James R Cornelison
Albert N. Darlington
Ratan Das
Jerome DiSciullo
Paul Drum
Donald Dunn
Guru Dutt Dhingra
Jorge Fernandez-Daher
Walter Elmore
Gary Engmann
Charles Fink
Rabiz Foda
Marcel Fortin
Eduardo Garcia
Trilok Garg
Saurabh Ghosh
Jeffrey Gilbert
Harley Gilleland
Mietek Glinkowski
Randall Groves
Bal Gupta
Michael Haas
N. Kent Haggerty
Wayne Hansen
Jerry Hohn
James D. Huddleston, III
James Ingleson
David W. Jackson
Joseph Jancauskas
Lars-Erik Juhlin
C. J. Kalra
Gael R. Kennedy
Vladimir Khalin
Yuri Khersonsky
Ljubomir Kojovic
Boyd Leuenberger
Maurice Linker
William G. Lowe
Gregory Luri
William Marsh
John Matthews
Michael McDonald
Jeffrey McElray
Peter G. McLaren
Nigel McQuin
Bryan Melville
Gary Michel
Brian P. Mugalian
Randolph Mullikin
Jerry Murphy
Bruce Muschlitz
Krste Najdenkoski
Bradley Nelson
Jeffrey Nelson
James M. O'Brien
Dhiru Patel
Wes Patterson
Paul Pillitteri
R. Vittal Rebbapragada
Charles Rogers
James Ruggieri
Mohindar S. Sachdev
Steven Sano
Devki Sharma
Hong-Ming Shuh
Tarlochan Sidhu
H. Jin Sim
Chuck Simmons
Tarkeshwar Singh
James E. Smith
Peter Stevens
Allan St. Peter
Rick Taylor
Chris Ten Haagen
Demetrios Tziouvaras
Gerald Vaughn
Tom Wandeloski
S. Frank Waterer
Del D. Weers
James Wilson
Philip Winston
Murty Yalla
Ray Young

When the IEEE-SA Standards Board approved this application guide on 8 November 2005, it had the following membership:

Steve M. Mills, *Chair*
Richard H. Hulett, *Vice Chair*
Don Wright, *Past Chair*
Judith Gorman, *Secretary*

Mark D. Bowman
Dennis B. Brophy
Joseph Bruder
Richard Cox
Bob Davis
Julian Forster*
Joanna N. Guenin
Mark S. Halpin
Raymond Hapeman
William B. Hopf
Lowell G. Johnson
Herman Koch
Joseph L. Koepfinger*
David J. Law
Daleep C. Mohla
Paul Nikolich
T. W. Olsen
Glenn Parsons
Ronald C. Petersen
Gary S. Robinson
Frank Stone
Malcolm V. Thaden
Richard L. Townsend
Joe D. Watson
Howard L. Wolfman

*Member Emeritus

Copyright © 2006 IEEE. All rights reserved.

Copyright The Institute of Electrical and Electronics Engineers, Inc.
Provided by IHS under license with IEEE
No reproduction or networking permitted without license from IHS
Not for Resale

Also included are the following nonvoting IEEE-SA Standards Board liaisons:

Satish K. Aggarwal, *NRC Representative*
Richard DeBlasio, *DOE Representative*
Alan H. Cookson, *NIST Representative*

Michael D. Fisher
IEEE Standards Project Editor

Copyright © 2006 IEEE. All rights reserved.

Copyright The Institute of Electrical and Electronics Engineers, Inc.
Provided by IHS under license with IEEE
No reproduction or networking permitted without license from IHS

Not for Resale

Contents

1. Overview 1

1.1 Scope 1
1.2 Purpose 1

2. Normative references 2

3. Definitions 2

4. Need for grounding secondary circuits of instrument transformers and cases 2

5. Grounding of instrument transformer secondary circuits 3

5.1 General 3
5.2 Background 3
5.3 Ground connection to only one point in the secondary circuit 4
5.4 Recommended point of grounding 4
5.5 Location of connection to ground 5
5.6 Minimum size of conductor for ground connection 7
5.7 Ground connection isolation test facilities 8

6. Grounding of instrument transformer cases and cases of connected equipment 21

6.1 Metallic or conductive case grounding 21
6.2 Internal conductive parts—insulated cases 21
6.3 Ungrounded metallic or conductive case 21

7. Exceptions to grounding 21

8. Grounding of low-energy transducers 22

8.1 General 22
8.2 Interconnection wiring practices 22

Annex A (informative) Issues to consider for shielded cable applications for instrument transformers 25

A.1 General 25
A.2 CTs installed over shielded cables, metal bushing collars, or conduits 25

Annex B (informative) IEEE standards reviewed by the I-13—Revision of C57.13.3 Working Group 27

Annex C (informative) Article 90.2—Scope of the NEC 28

Annex D (informative) Survey of grounding practices 30

Annex E (informative) Bibliography 33

Copyright © 2006 IEEE. All rights reserved.

Copyright The Institute of Electrical and Electronics Engineers, Inc.
Provided by IHS under license with IEEE
No reproduction or networking permitted without license from IHS
Not for Resale

IEEE Guide for Grounding of Instrument Transformer Secondary Circuits and Cases

1. Overview

The practices described in this guide apply to all instrument transformers, including capacitive voltage transformers (VTs) and linear couplers, irrespective of primary voltage or whether the primary windings are connected to, or are in, power circuits or are connected in the secondary circuits of other transformers as auxiliary current transformers (CTs) or VTs.

This guide does not discuss the grounding of some applications. For example, grounding of gas insulated substations and metal clad switchgear is not discussed in this guide; the reader will find these topics addressed in IEEE Std 242™ [1]. The grounding of circuits of core-balance CTs is also not discussed in this guide. The reader can also find this information in IEEE Std 242. Another issue that is not discussed in this guide is the practice of using separate safety and control grounds. For discussion on this topic, the reader is directed to IEEE Std 665™.

1.1 Scope

The scope of the guide includes the grounding practices presently used and the practices that were not previously reported. Specifically, the issue of the grounding of cases of electronic transducers is addressed.

1.2 Purpose

This guide provides information on the grounding of the following:

— Secondary circuits of electromagnetic CT and VT circuits

— Cases of relays, CTs, and VTs

— Secondary circuits of optoelectronic CTs and VTs

The primary emphases of this guide are personnel safety and proper performance of relays at electric power frequencies.

[1] For information on references, see Clause 2.

Copyright © 2006 IEEE. All rights reserved.

Copyright The Institute of Electrical and Electronics Engineers, Inc.
Provided by IHS under license with IEEE
No reproduction or networking permitted without license from IHS
Not for Resale

2. Normative references

The following referenced documents are indispensable for the application of this document. For dated references, only the edition cited applies. For undated references, the latest edition of the referenced document (including any amendments or corrigenda) applies.

Accredited Standards Committee C-2, National Electrical Safety Code® (NESC®).[1]

IEEE Std 242™, IEEE Recommended Practice for Protection and Coordination of Industrial and Commercial Power Systems.[2, 3]

IEEE Std 525™, IEEE Guide for the Design and Installation of Cable Systems in Substations.

IEEE Std 665™, IEEE Guide for Generating Station Grounding.

IEEE Std 1143™, IEEE Guide on Shielding Practice for Low Voltage Cables.

IEEE Std C62.92™, IEEE Guide for the Application of Neutral Grounding in Electrical Utility Systems.

NFPA 70, National Electrical Code® (NEC®).[4]

3. Definitions

For definitions of terms used in this guide, see IEEE Std C37.100™-1992 [B8][5] and *The Authoritative Dictionary of IEEE Standards Terms* [B2].

4. Need for grounding secondary circuits of instrument transformers and cases

It is necessary to ground secondary circuits of instrument transformers for protecting the protection, monitoring, and control equipment that are connected to them and for the safety of personnel who might come into contact with them. The primary circuits of instrument transformers are at high voltages; in many cases, they are in the range of hundreds of kilovolts. There is a (stray) capacitance between the high-voltage circuit and the secondary circuit of the instrument transformer. If a secondary circuit is not grounded, there will be a capacitance between the secondary circuit and the ground. The capacitances between the high-voltage circuit and the secondary circuit of the instrument transformer, and the capacitance between the secondary circuit and ground, are now connected in series and act like a voltage divider. A charge could accumulate on the secondary winding of the instrument transformer. Depending on the relative values of the two capacitances, the electrostatic potential of the secondary circuit with respect to ground could be substantial. This potential rise of the secondary circuit could damage the equipment connected to it; one of the failure modes could be insulation failure in the protection and control devices. The high electrostatic potential of the secondary circuit of the instrument transformer would be a hazard for personnel who might come into contact with the circuit. Because of these reasons, grounding has received attention in many standards, recommended practices, and guides. While these standards provide sufficient guidance, the

[1] The NESC is available from the Institute of Electrical and Electronics Engineers, 445 Hoes Lane, P.O. Box 1331, Piscataway, NJ 08855-1331, USA (http://standards.ieee.org/).
[2] The IEEE standards or products referred to in this clause are trademarks of the Institute of Electrical and Electronics Engineers, Inc.
[3] IEEE publications are available from the Institute of Electrical and Electronics Engineers, 445 Hoes Lane, P.O. Box 1331, Piscataway, NJ 08855-1331, USA (http://standards.ieee.org/).
[4] The NEC is published by the National Fire Protection Association, Batterymarch Park, Quincy, MA 02269, USA (http://www.nfpa.org/). Copies are also available from the Institute of Electrical and Electronics Engineers, 445 Hoes Lane, P.O. Box 1331, Piscataway, NJ 08855-1331, USA (http://standards.ieee.org/).
[5] The numbers in brackets correspond to those of the bibliography in Annex A.

Copyright © 2006 IEEE. All rights reserved.
--`,,```,,,,````-`-`,,`,,`,`,,`---
Copyright The Institute of Electrical and Electronics Engineers, Inc.
Provided by IHS under license with IEEE
No reproduction or networking permitted without license from IHS
Not for Resale

reader is advised to make certain that the grounding regulations provided in the National Electrical Code® (NEC®) (NFPA 70) and the National Electrical Safety Code® (NESC®) (Accredited Standards Committee C-2) are always adhered to. (Article 90.2 (A) of the NEC lists the installations that are covered by the Code, and Article 90.2 (B) lists the installations that are not covered by the Code. For immediate reference, Article 90.2 of the NEC is reproduced in Annex C.) If the secondary circuit of an instrument transformer is grounded, the capacitance between the secondary circuit and ground is short-circuited and electrostatic potential does not build up on the secondary circuit.

Similarly, there is a (stray) capacitance between the primary circuit and the case of a device used in the power system environment. If the case is not grounded, there is a (stray) capacitance between the case and the ground. These two capacitances form a series circuit that acts as a voltage divider. In this case also, the electrostatic potential of the case could be substantial. This would be a hazard for personnel who might come in contact with the case. The grounding of the case short-circuits the capacitance between the case and the ground and keeps the case at ground potential—eliminating the hazard. As stated in the previous paragraph, the reader must adhere to the requirements of the NEC and the NESC.

WARNING

Grounding of secondary circuits is an issue of safety of personnel and equipment connected to the secondary circuits. The reader is urged to consider it seriously and follow the stipulations of relevant standards and always adhere to the stipulations of the NEC and the NESC. Article 90.2 (A) of the NEC lists the installations that are covered by the Code, and Article 90.2 (B) lists the installations that are not covered by the Code. For immediate reference of the readers, Article 90.2 of the NEC is reproduced in Annex C.

5. Grounding of instrument transformer secondary circuits

5.1 General

The issue of grounding instrument transformers requires insight into the operation of power systems during normal working conditions and during faults between one or more phases to ground. In these cases, parts of the fault currents flow in the ground path and raise the voltage of the grounding grids in generating stations and substations. When this happens, different locations in the generating stations and substations are at different potentials. These differences are taken into consideration when choosing the manner in which the secondary circuits of the CTs and VTs are connected. This clause examines the relevant issues on the grounding needs and practices.

Specific issues addressed in this clause include grounding at a single location on a secondary circuit, location of the ground, marking of ground connections, and the minimum size of conductor used for grounding the secondary circuits.

5.2 Background

Each secondary circuit of CTs and VTs is usually a completely self-contained metallic circuit. The circuit is insulated from ground, except at one point in the circuit where it is solidly grounded through a conductor of adequate size. (See 5.6 for conductor size and 5 for permissible exceptions.)

For the purposes of this guide, an instrument transformer (CT or VT) secondary circuit consists of a set of three-phase secondary windings of the instrument transformers and all the coils, contacts, and other components connected to those windings by insulated metallic wires. In single-phase applications, the instrument transformer secondary circuit consists of the secondary winding of the instrument transformer and all the coils, contacts, and other components connected to that winding by insulated metallic wires.

Copyright © 2006 IEEE. All rights reserved.

Copyright The Institute of Electrical and Electronics Engineers, Inc.
Provided by IHS under license with IEEE
No reproduction or networking permitted without license from IHS
Not for Resale

5.3 Ground connection to only one point in the secondary circuit

The instrument transformer secondary circuit, irrespective of the number of instrument transformer secondary windings connected to or in that circuit, is usually connected to the station ground at only one point. Usually, the common return circuit for two or more transformers is made into a common neutral. This neutral is then connected to the station grounding grid at only one point, so that the station grounding grid does not become part of the instrument transformer secondary circuit.

The reasons for making the ground connection only at a single point in each circuit are as follows:

a) Different locations on the station grounding grid are at different potentials when fault currents flow through the grounding grid. If the secondary circuits are grounded at more than one location, the potential differences between the grounding locations during faults can result in current flows through the relays and meters connected to the circuit. These additional currents could cause the relays to perform incorrectly and could result in providing incorrect measurements by meters. If the neutral conductor of the secondary circuit is connected to ground at multiple locations, large amounts of current could flow in the neutral conductor that could overheat this conductor and damage it.

b) Sometimes it is desirable to test the integrity of the insulation of the secondary circuit to check for the existence of accidental grounds on the circuit. Grounding the secondary circuit at one location and making a provision for isolating the circuit from the ground comes in handy when the test is to be conducted.

For convenience, some users connect individual neutrals or wye points of two or more sets of instrument transformers to form a neutral bus, which is then connected from one point to the station grounding grid. Connecting the neutrals or wye points of two or more sets of instrument transformers would cause difficulty when insulation tests between the circuits connected to a set of instrument transformers and ground are to be conducted. Removing the ground connection for conducting the test on the circuits connected to one set of instrument transformers would isolate the secondary circuits of all the instrument transformers from ground while they could be in operation. The arrangements for grounding secondary circuits connected to CTs and VTs, which facilitate the testing of those circuits, are described in 5.7.

5.4 Recommended point of grounding

The instrument transformer secondary circuits are generally grounded at one point. The circuits shall preferably be connected to ground at the first point of application of the circuit (switchboard or relay panel). This practice provides maximum protection for personnel and connected equipment at the switchboard, which is the location where overvoltages are likely to be experienced.

It may be necessary to ground the instrument transformer secondary circuit at another location if the arrangement of the secondary windings or devices connected to the circuit makes this necessary for obtaining correct equipment performance or for other justifiable reasons.

If the advantages of the desired performance are considered to outweigh the advantages of grounding of the secondary windings directly, the secondary windings are grounded through the coils of relays, instruments, meters, and other elements, such as auxiliary transformers, which form part of the secondary circuit.

Copyright © 2006 IEEE. All rights reserved.

Copyright The Institute of Electrical and Electronics Engineers, Inc.
Provided by IHS under license with IEEE
No reproduction or networking permitted without license from IHS
Not for Resale

Some specific examples of this practice follow:

a) One end of the instrument transformer secondary winding in a circuit supplied by a single transformer is connected to a single ground.

b) The common point of connection of the secondary windings of all instrument transformers in a circuit supplied by two or more transformers is connected to a single ground. This applies to situations where two or more instrument transformers, or sets of instrument transformer secondary windings, are used in any combination that has a common secondary return circuit, including the following:

   1) Parallel or cross-connected secondary windings

   2) Three single-phase transformers wye-connected to form a three-phase connection

   3) Two series, open-wye or open-delta connected instrument transformer secondaries

c) The secondary circuit of three or more CTs or VTs connected in delta, or in some other manner, so that no common point of connection is available for all of the secondary circuits. A point that is common to most of the secondary circuits is connected to ground.

d) When the secondary windings of two or more sets of CTs are interconnected but they cannot have a common neutral connection, then the secondary neutral connection for the greatest number of the CTs is connected to ground. A specific case occurs where some of the interconnected CTs have delta-connected secondary windings for supplying differential protective relays.

5.5 Location of connection to ground

5.5.1 General

The following two practices are used for grounding instrument transformer secondary circuits:

a) The circuit is connected to ground where the instrument transformers are located.

b) The circuit is connected to ground where relays and other devices connected to the circuit are located.

Connecting the instrument transformer secondary circuit to ground at or near the instrument transformer location limits the voltage stresses on the secondary windings of the instrument transformers. The secondary burden devices are mostly located at the switchboard that could be several hundred meters from where the instrument transformers are located. These devices would be subjected to significant overvoltages during power system short circuits to ground.

Because test and operating personnel are more likely to be working at the switchboard, rather than at the instrument transformer location, grounding the instrument transformer secondary circuits at the first switchboard entry, as is shown in Figure 1 for grounding secondary circuits of VTs, is more desirable. This option provides better protection for personnel and equipment connected to the secondary circuit. Additionally, locating the ground at the first point of application makes it more convenient to conduct insulation tests as already stated in item b) of 5.3.

A disadvantage of grounding the secondary circuit at the location of the instrument transformer is that the secondary circuit could be grounded at the switchboard as well—not realizing that the circuit has already been grounded at the location of the instrument transformer.

Copyright © 2006 IEEE. All rights reserved.

Copyright The Institute of Electrical and Electronics Engineers, Inc.
Provided by IHS under license with IEEE
No reproduction or networking permitted without license from IHS
Not for Resale

5.5.2 Unused secondary windings of instrument transformers

In many situations, some of the secondary windings of instrument transformers are not used and no circuit is connected to the windings. In such cases, the secondary winding of the instrument transformer is connected to ground where the instrument transformer is located. If a circuit is connected to the instrument transformer secondary and is taken to a switchboard but is not connected to any measurement or protection device, the circuit is grounded at the first point of entry to the switchboard (see Method 1 in Figure 1).

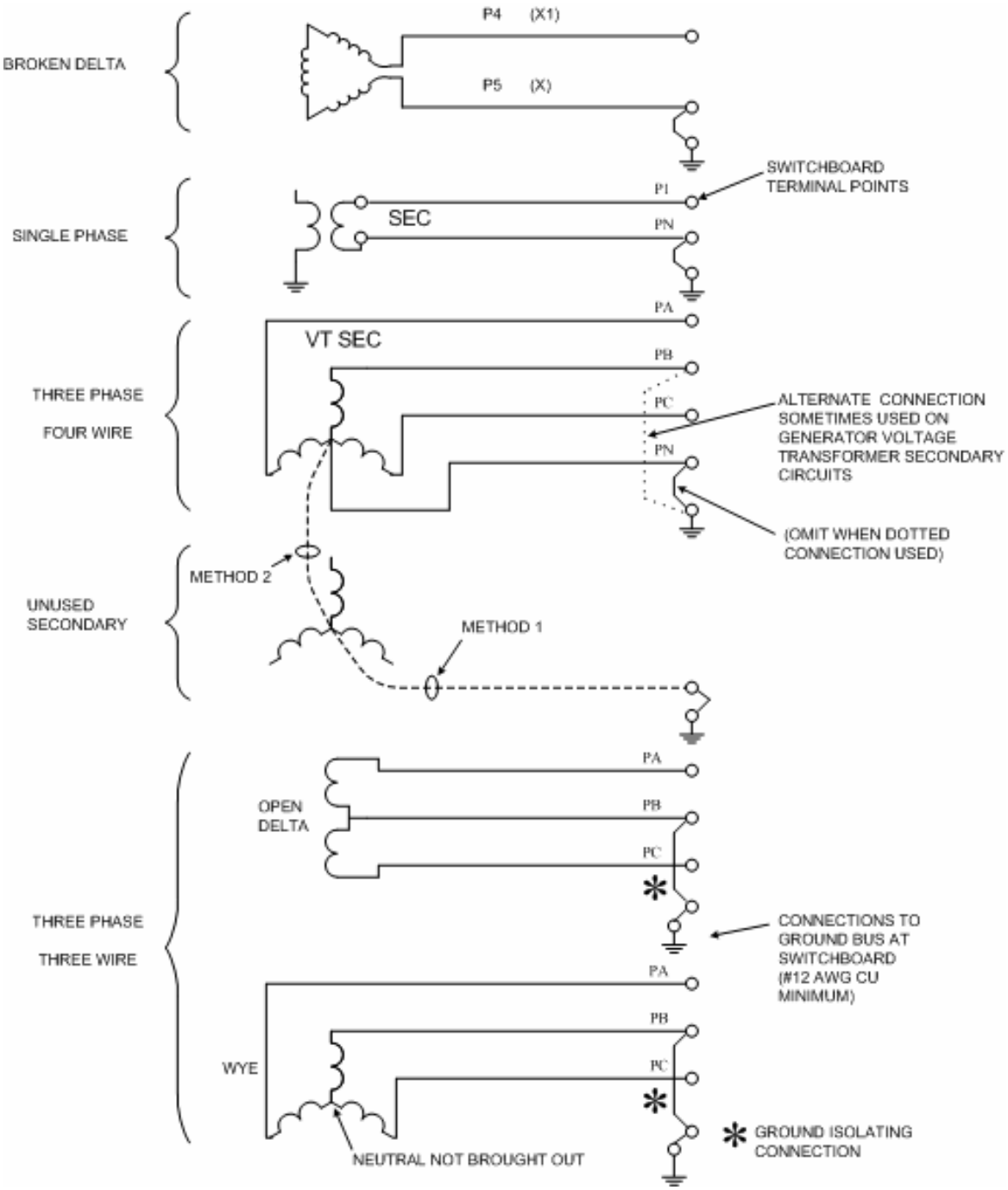

Figure 1—Methods of grounding VT secondary circuits

Copyright © 2006 IEEE. All rights reserved.

Copyright The Institute of Electrical and Electronics Engineers, Inc.
Provided by IHS under license with IEEE
No reproduction or networking permitted without license from IHS
Not for Resale

However, grounding the unused winding at the switchboard creates a much greater probability that noise will be coupled from the unused winding to the used winding during ground faults on the system. If noise coupling is a problem, connection of the unused winding to the used winding neutral at the transformer location becomes necessary (see Method 2 in Figure 1).

When it is necessary or desirable to ground the secondary winding of an instrument transformer where it is located, such as for an unused winding, the connection from the instrument transformer secondary circuit is connected to the grounding grid directly, as is shown in Figure 2.

A connection to ground is made in an accessible location to facilitate its temporary removal and reconnection for test purposes. The connection is not made through fuses or through contacts of any testing or switching device that can be inadvertently opened or left open. Sliding link terminal blocks also are considered inappropriate for this reason.

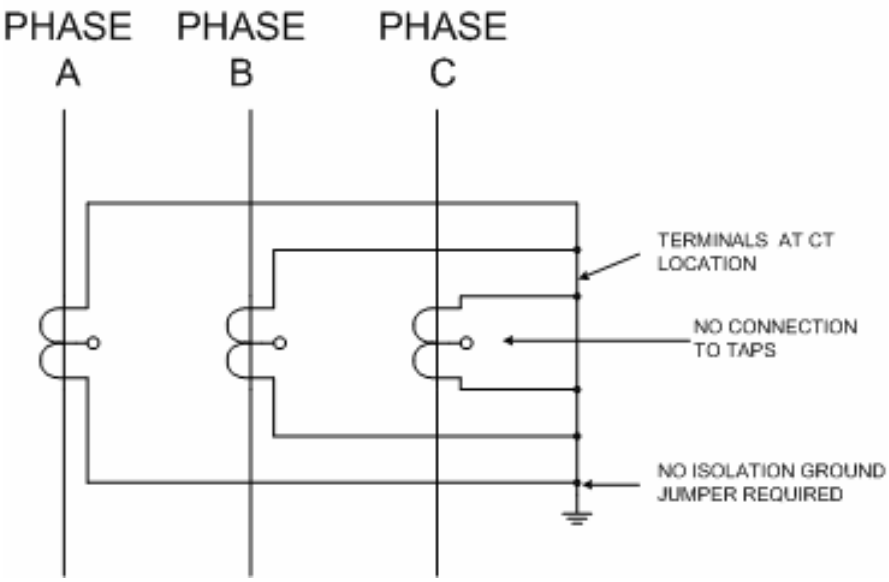

Figure 2—Grounding of unused CTs

5.6 Minimum size of conductor for ground connection

The grounding conductor is as large as (or larger than) the secondary phase conductors. As required by NESC®, Copper wire of No. 12 AWG size (area = 3.310 mm^2 at 20 °C) or larger is used for mechanical reasons and for reason of current-carrying capacity. If made of another metal, the wire is chosen such that its conductance, strength, and current-carrying capacity are equal to that of No. 12 AWG (area = 3.310 mm^2 at 20 °C) copper wire.

In some cases, a circuit cannot be grounded directly, but the need for grounding is met by grounding through the coil of a device. In such cases, a wire of any size is considered adequate for use inside the device so long as it has sufficient mechanical strength to withstand electromagnetic forces caused by the flow of current in the device. All conductors external to the device, through which the circuit is connected to ground, should conform to the requirements outlined in the preceding paragraph.

Copyright © 2006 IEEE. All rights reserved.

Copyright The Institute of Electrical and Electronics Engineers, Inc.
Provided by IHS under license with IEEE
No reproduction or networking permitted without license from IHS
Not for Resale

5.7 Ground connection isolation test facilities

5.7.1 General

The instrument transformer secondary circuits are connected to ground in a way that permits convenient removal of the ground connection for isolating or testing as stated in item b) of 5.3. It is usual to ensure that removal of a connection to ground on one circuit does not interfere with maintaining a ground on any other circuit. Because of the different configurations used for instrument transformer secondary circuits, it is not always readily apparent how this is accomplished. The following discussion and examples illustrate typical methods of providing the isolation test facility for secondary circuits connected to VTs and CTs.

5.7.2 VT secondary circuits

VT secondary circuits are used in electric power systems in different forms. One of the forms consists of using the outputs of VTs for providing voltages to meters and relays. Another form consists of circuits that provide the outputs of VTs to synchroscopes. The third form consists of the circuits that provide the outputs of station distribution transformers to meters and relays. These applications are reviewed in 5.7.2.1 through 5.7.2.3.

5.7.2.1 Typical applications

Typical VT circuits used for metering and relaying are shown in Figure 1. In the three-phase, four-wire configuration, the neutral of the secondary windings of the VTs is provided for connecting phase-to-neutral loads. The neutral is normally grounded at the first point of application, as is shown in Figure 1. In this configuration, a phase-to-neutral fault on the VT secondary circuit appears to protective relays to be a phase-to-neutral fault on the power system.

An alternative method sometimes used is to ground one phase (usually phase-B) instead of the neutral. A phase-A or phase-C to ground fault on the secondary circuit now appears to be a phase-A to phase-B or phase-C to phase-B fault on the power system. There is, also, a possibility of a neutral-to-ground fault, a phase-B to neutral fault or a short circuit of a phase-to-neutral load on the secondary circuit of the VT. It is desirable that the impact of such short circuits in the secondary windings of VTs on the coordination of protection devices be evaluated.

The three-phase, three-wire configuration is often used for VT circuits in metal clad switchgear. This configuration is also used in generator and auxiliary bus VT circuits in generating stations. The common practice is to ground one of the phases, usually phase-B, as is shown in Figure 1 for both the open delta and ungrounded wye connections of the secondary windings of the VTs. This reduces the problems associated with the coordination of the primary protective devices and protective devices provided on the circuits connected to the secondary windings of the VTs for phase-to-neutral short circuits or phase-to-ground insulation failures.

Distribution transformers are not instrument transformers but are sometimes applied to provide voltages to meters and relays. In such situations, additional hazards are created due to the power output capabilities of the distribution transformers or due to the grounds of the primary and secondary windings not being isolated from each other. Figure 3 shows typical methods for grounding secondary circuits of generator-neutral grounding transformers, three-phase wye-open delta grounding transformer, and the use of isolating transformers where the grounds on the primary and secondary circuits cannot be isolated from each other. This situation is usually encountered with generator neutral grounding banks used to provide system ground on otherwise ungrounded systems. More information on this subject is available in IEEE Std C62.92.

Copyright © 2006 IEEE. All rights reserved.

Copyright The Institute of Electrical and Electronics Engineers, Inc.
Provided by IHS under license with IEEE
No reproduction or networking permitted without license from IHS
Not for Resale

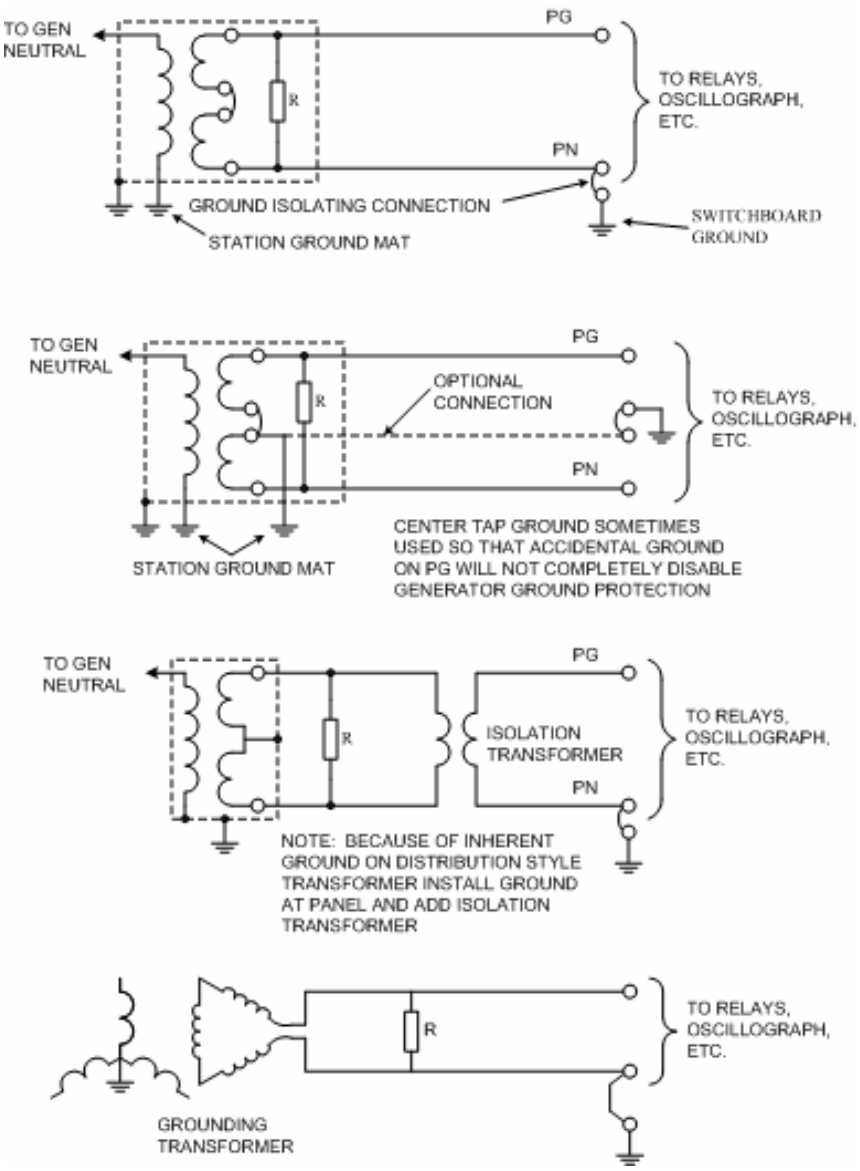

Figure 3—Typical grounding methods for distribution transformer and VT secondary circuits

5.7.2.2 Synchronizing circuits

The requirement of removing the ground on one circuit so that it does not interfere with the operation of other circuits is a difficult task when circuits connected to the secondary windings of VTs are used for synchronizing because many circuits converge at the synchronizing scope. A few examples are given to illustrate the problem and the solutions that are usually adopted.

A typical synchroscope circuit without synchronizing lights is shown in Figure 4. In this case, the scope is connected to the secondary windings of two VTs. The secondary windings of both VTs are grounded directly. This is a satisfactory approach because the two circuits remain isolated from each other due to the internal construction of the synchroscope. However, this approach is valid when there are only two circuits that have to be synchronized.

Copyright © 2006 IEEE. All rights reserved.

Copyright The Institute of Electrical and Electronics Engineers, Inc.
Provided by IHS under license with IEEE
No reproduction or networking permitted without license from IHS
Not for Resale

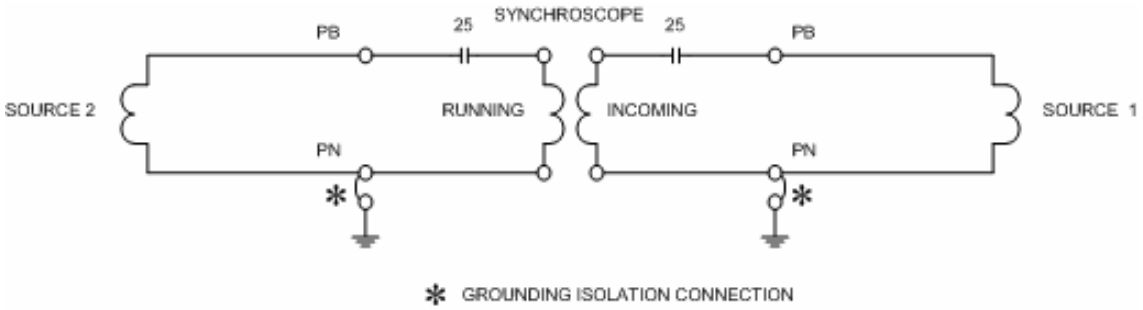

Figure 4—Grounding a basic circuit for synchronizing two sources

In practice, a synchroscope is to be used for synchronizing a running circuit with an incoming circuit that is one out of several circuits. The arrangement shown in Figure 4 is modified to the form shown in Figure 5. In this case, 25SS switch contact is placed in the neutrals of the VT circuits of the incoming sources. Since only one 25SS switch is permitted to be closed at a time, the neutrals of the circuits connected to the VTs of the running and incoming sources remain isolated from each other. The running circuit neutral does not need to be switched with this arrangement.

In some situations, a synchroscope is used for synchronizing one running circuit, out of several circuits, with an incoming circuit that is also one out of many circuits. One solution in this case is to use contacts of the 25SS switch in the neutral circuits of the VTs of the running sources, as is shown in Figure 6. An alternative to using the 25SS switch contacts is the use of isolation transformers, as is shown in Figure 7. These transformers are usually rated 115-115 V, 600 V class, and sufficient voltampere capacity for operating the synchroscope (and synchronizing lamps, if they are used).

Synchronizing lamps, shown in Figure 8, provide a reliable indication of the phasing between the voltages of the running and incoming sources and a check on the performance of the synchroscope. During the synchronizing process, the phase displacement between the voltages of the running and incoming sources vary from 0° to 180°. Because the lamps are rated for phase-to-ground voltage, two lamps connected in series are used in this circuit. The lights become especially handy when the difference of the frequencies of the two sources is too great for the synchroscope to provide an indication of the phase difference between the two sources.

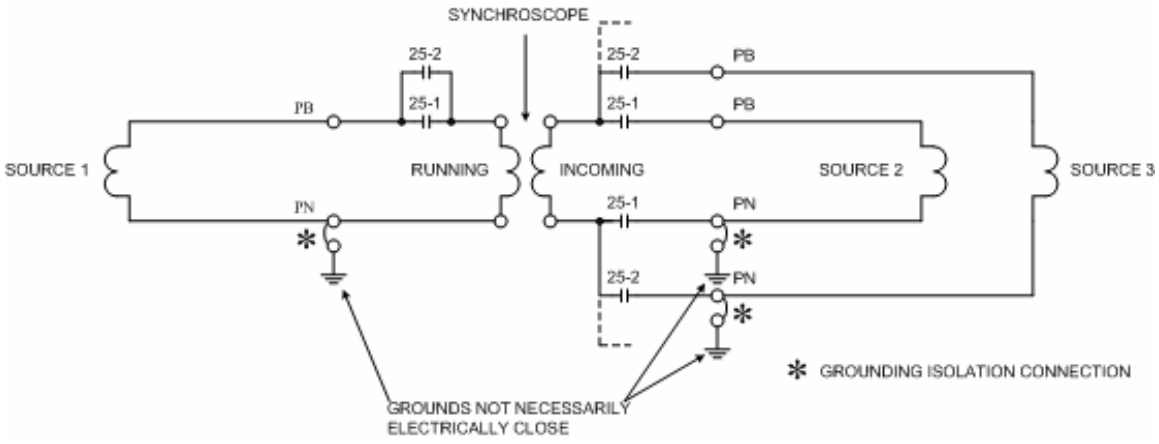

Figure 5—Grounding circuits for synchronizing a source with multiple incoming sources

Copyright © 2006 IEEE. All rights reserved.

Copyright The Institute of Electrical and Electronics Engineers, Inc.
Provided by IHS under license with IEEE
No reproduction or networking permitted without license from IHS
Not for Resale

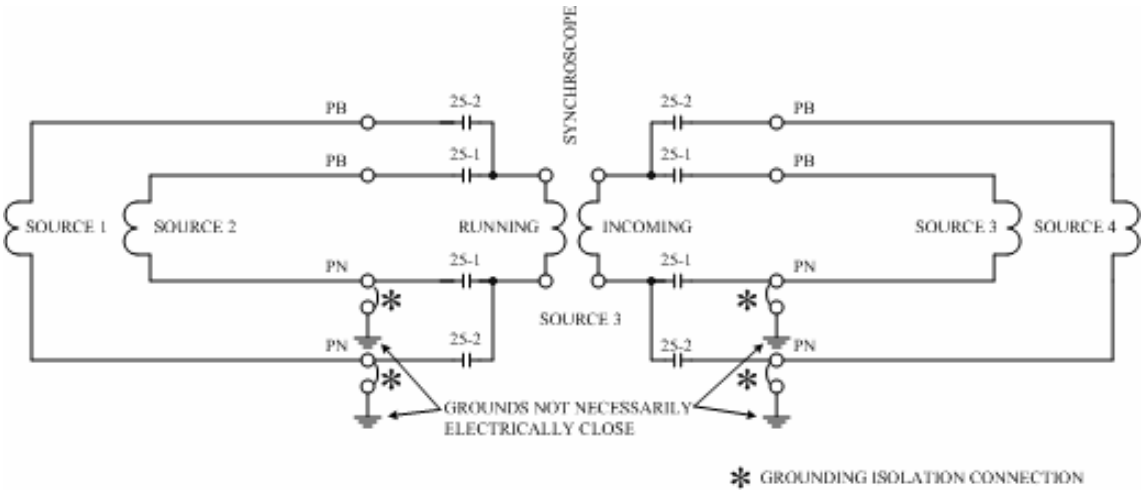

Figure 6—Grounding typical circuits for synchronizing multiple incoming and running sources

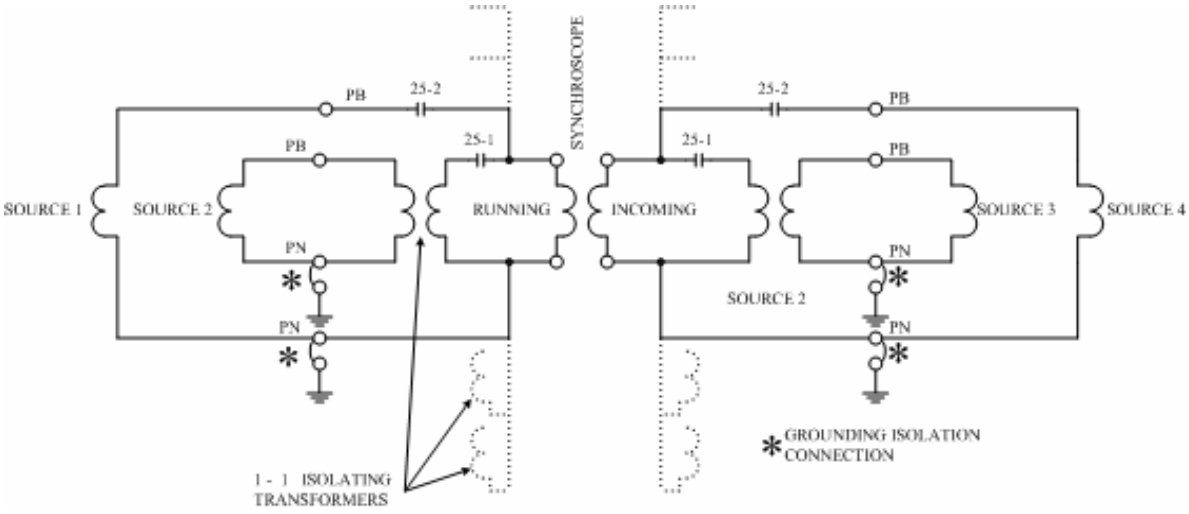

Figure 7—Grounding typical synchroscope circuits with multiple running and incoming sources using isolating transformers

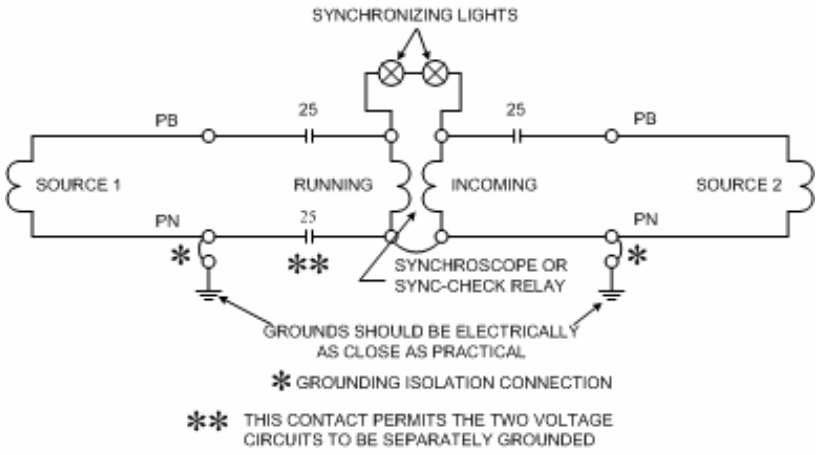

Figure 8—Grounding circuits of a synchroscope with synchronizing lights

Copyright © 2006 IEEE. All rights reserved.

Copyright The Institute of Electrical and Electronics Engineers, Inc.
Provided by IHS under license with IEEE
No reproduction or networking permitted without license from IHS
Not for Resale

The addition of the lamps requires that the neutrals of the VTs of the running and incoming sources be connected together (at the scope) resulting in two grounds on the neutral circuits. Device 25 contacts in the neutrals eliminate the influence of multiple grounds on the VT secondary circuits of other VTs. Also, the two grounds on the neutral of the VTs of the incoming and running sources exist for a very short time when synchronizing is being done. If, however, this is not acceptable, isolation transformers can be used as shown in Figure 7.

5.7.2.3 Station service power used for voltage circuits

Some installations, especially distribution substations, use the station service transformer as one phase of a three-phase instrument voltage source. The station service neutral is grounded at the switchboard and, probably, is also grounded at the transformer. The neutral for the two VTs is grounded only at the switchboard, as is shown in Figure 9. To minimize the effect of multiple grounds on the phase B (station service) transformer, 2 ½ element metering and instrumentation is connected to phase A and C. The indicating voltmeter will, of course, be affected by any difference in ground potential when phase B line-to-neutral voltage is monitored. This is normally of no consequence.

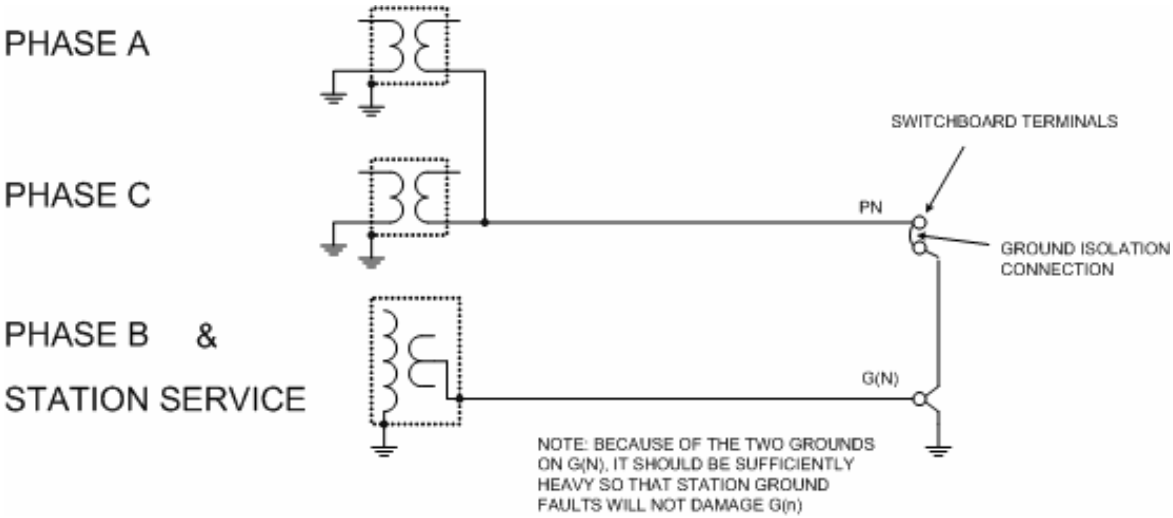

Figure 9—Grounding VT and station service neutrals

5.7.3 CT secondary circuits

A few issues concerning the isolation of the grounding of the secondary circuits of CTs are reviewed in 5.7.3.1 through 5.7.3.4.

5.7.3.1 Unused CTs

Sometimes, CTs are not used; their secondary windings are not connected to meters, relays, or any other instruments. The full secondary windings of these CTs are short-circuited at the CT location and are grounded. This is shown in Figure 2. No isolating ground jumper is shown in this figure. The reason is that there is no secondary circuit connected to the CT and, therefore, no circuit testing facility is needed.

Copyright © 2006 IEEE. All rights reserved.

Copyright The Institute of Electrical and Electronics Engineers, Inc.
Provided by IHS under license with IEEE
No reproduction or networking permitted without license from IHS
Not for Resale

5.7.3.2 Single phase

In many situations, single-phase currents are applied to relays, such as transformer neutral currents applied to relays and ground sensors and currents applied to transformer temperature indicators. Such circuits are grounded as shown in Figure 10. A ground jumper is used in this case to facilitate the testing of the insulation of the circuit connected to the CT secondary winding.

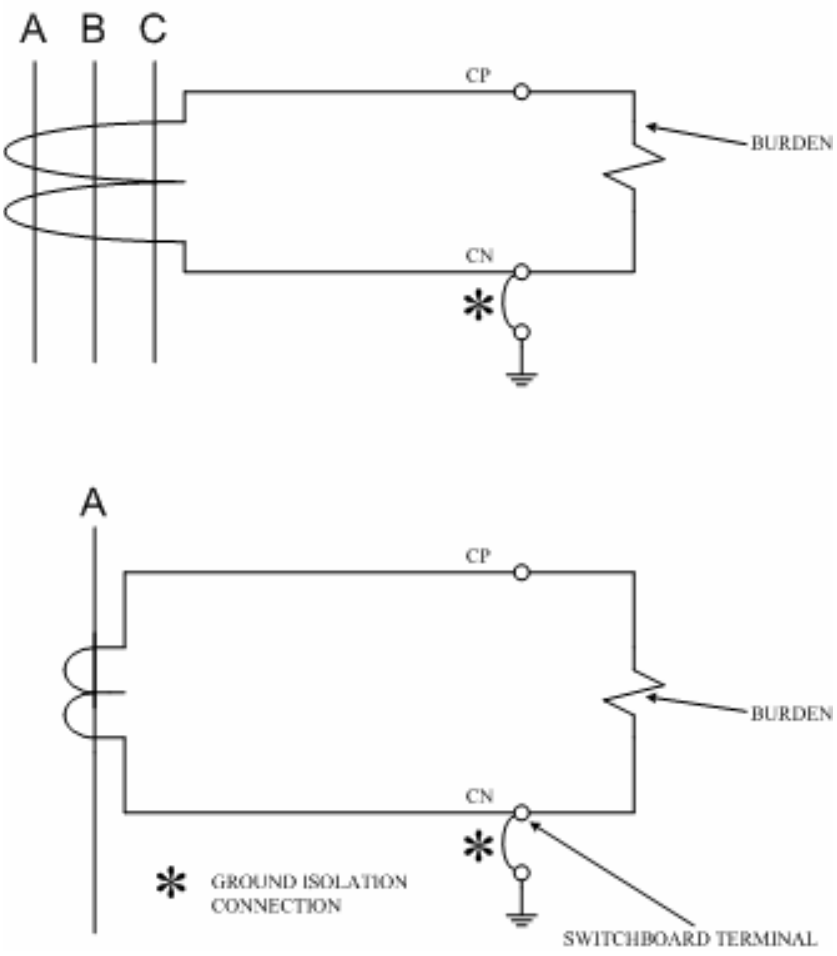

Figure 10—Grounding of single-phase CT secondary circuits

5.7.3.3 Three-phase CTs

The majority of three-phase CTs, whose outputs are applied to instruments and relays, are wye-connected. The exception is the delta-connected CTs that are used to provide inputs to transformer differential relays. The wye-connected secondary windings of CTs are grounded as shown in Figure 11. If the secondaries of two CTs are connected in series for increasing their burden capability, the neutral is grounded as shown in Figure 12. In some applications, only two CTs are used for providing inputs to relays. In these cases, the CT neutral is grounded as shown in Figure 13.

Copyright © 2006 IEEE. All rights reserved.

Copyright The Institute of Electrical and Electronics Engineers, Inc.
Provided by IHS under license with IEEE
No reproduction or networking permitted without license from IHS
Not for Resale

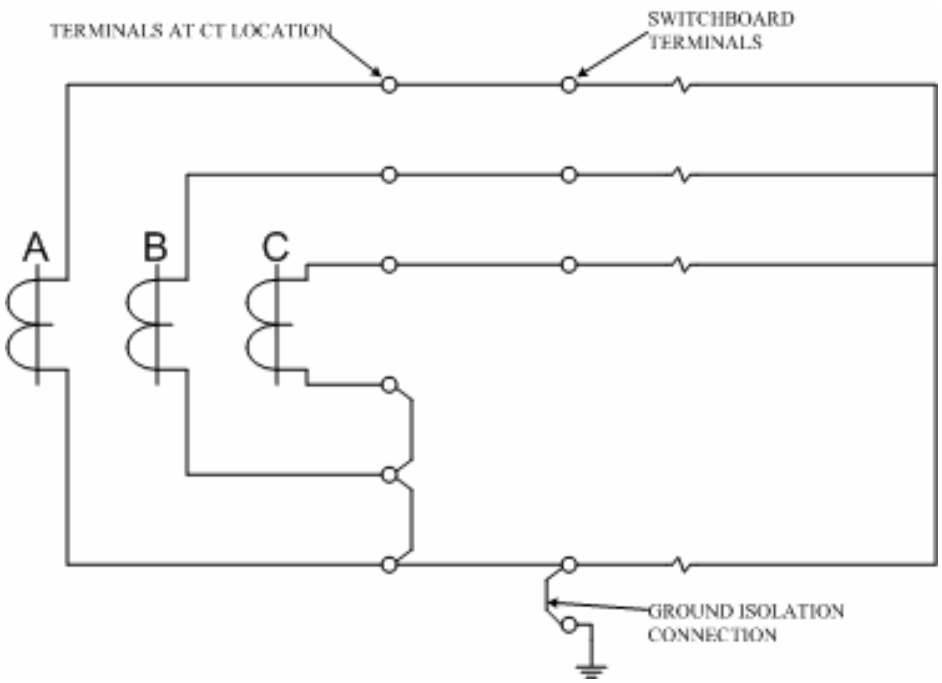

Figure 11—Grounding three-phase wye-connected CT secondary circuit

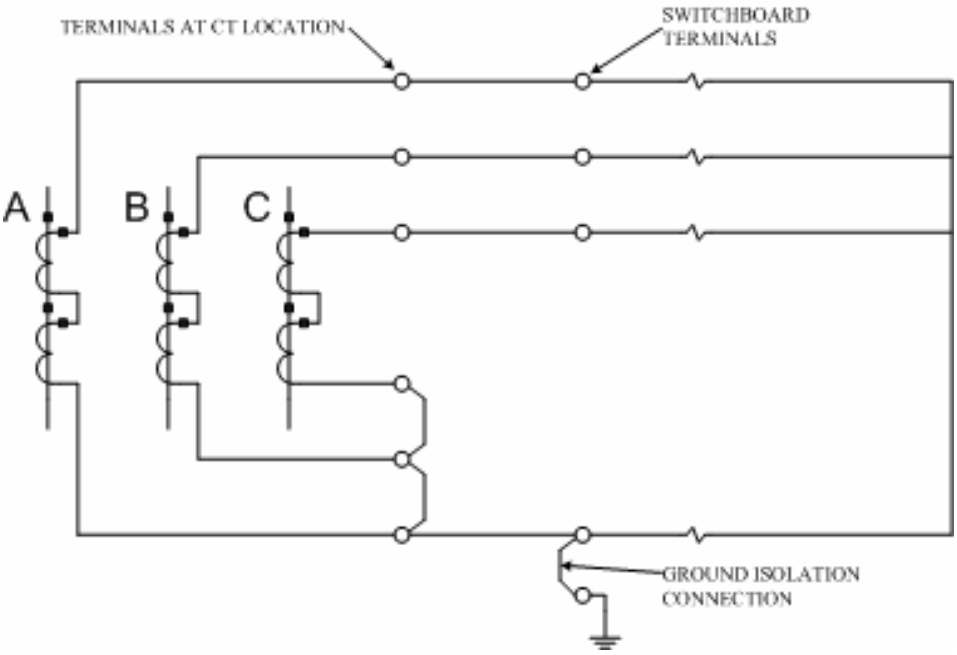

Figure 12—Grounding of secondary circuit of two three-phase series-connected wye configuration CTs

Copyright © 2006 IEEE. All rights reserved.

Copyright The Institute of Electrical and Electronics Engineers, Inc.
Provided by IHS under license with IEEE
No reproduction or networking permitted without license from IHS
Not for Resale

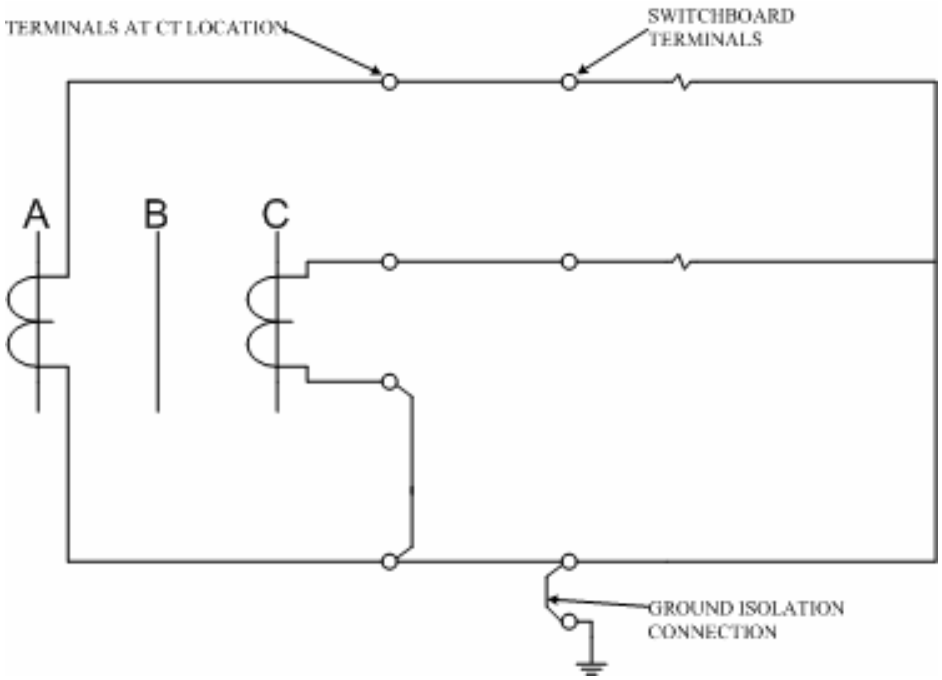

Figure 13—Grounding of the secondary circuit of vee-connected CTs

In many applications, delta-wye connected transformers are used to connect systems operating at two voltage levels. The CTs installed on the delta side of the power transformer are connected in wye configuration, and the CTs installed on the wye side of the power transformer are connected in delta configuration. The grounding of the secondary circuit connecting the relays to the CTs is shown in Figure 14. If the power transformer is wye-wye connected, the CTs on both sides of the power transformer are delta-connected. The grounding of the secondary circuit connecting the current differential relays with the CT secondaries in this case is shown in Figure 15.

Many substations use single-bus configuration with all the incoming and outgoing circuits connected to it. Grounding of CT secondary circuits of a high-impedance bus differential relay and a percentage bus differential relay applied to such configurations are shown in Figure 16 and Figure 17, respectively. In many cases, linear couplers are used for detecting faults on substation buses. Figure 18 shows the grounding of secondary circuits of bus-couplers used to protect a single-bus arrangement.

Two other often-used bus configurations are the ring-bus and breaker-and-a-half configurations. The secondary circuits that connect CTs to meters and relays on a circuit connected to a ring bus or a circuit connected to a breaker-and-a-half configuration are shown in Figure 19.

5.7.3.4 Multiple uses of CTs

Some special applications require that one set of CTs be used for two relay circuits such as circuits controlled with two circuit breakers in a double-breaker configuration. As is done in other CT secondary circuits, only one ground should be used for each metallic neutral. Figure 20 shows one arrangement for the interconnections of CTs whose secondary windings are connected to relays provided for line and bus differential protection. The use of isolating auxiliary CTs has resulted in forming three separate circuits, one circuit each with its own neutral. This has made it necessary to provide three grounds, one on each circuit as shown in Figure 20.

Copyright © 2006 IEEE. All rights reserved.

Copyright The Institute of Electrical and Electronics Engineers, Inc.
Provided by IHS under license with IEEE
No reproduction or networking permitted without license from IHS
Not for Resale

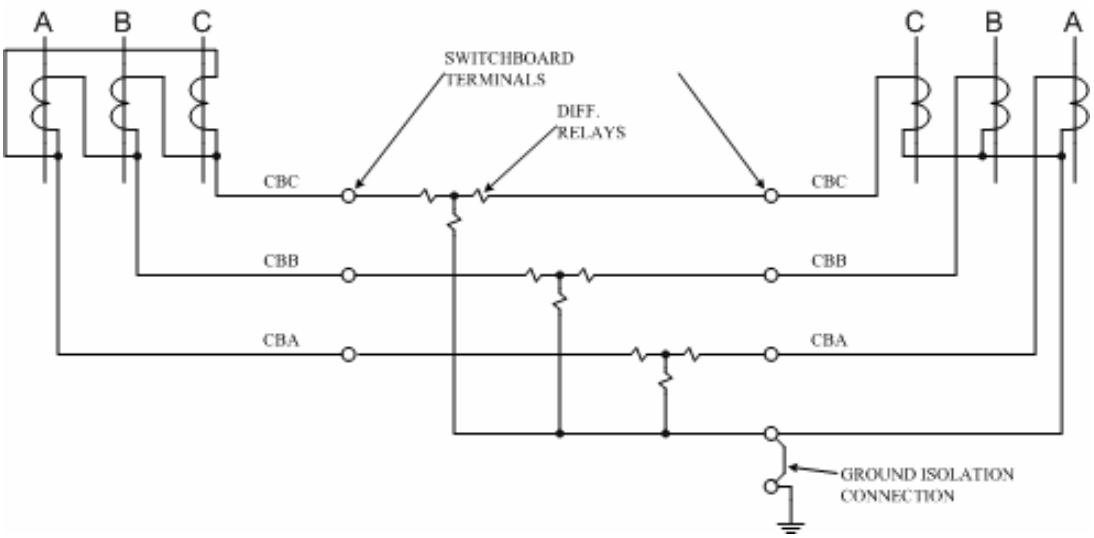

Figure 14—Grounding secondary circuits of wye-delta connected CTs used for differential protection of transformers

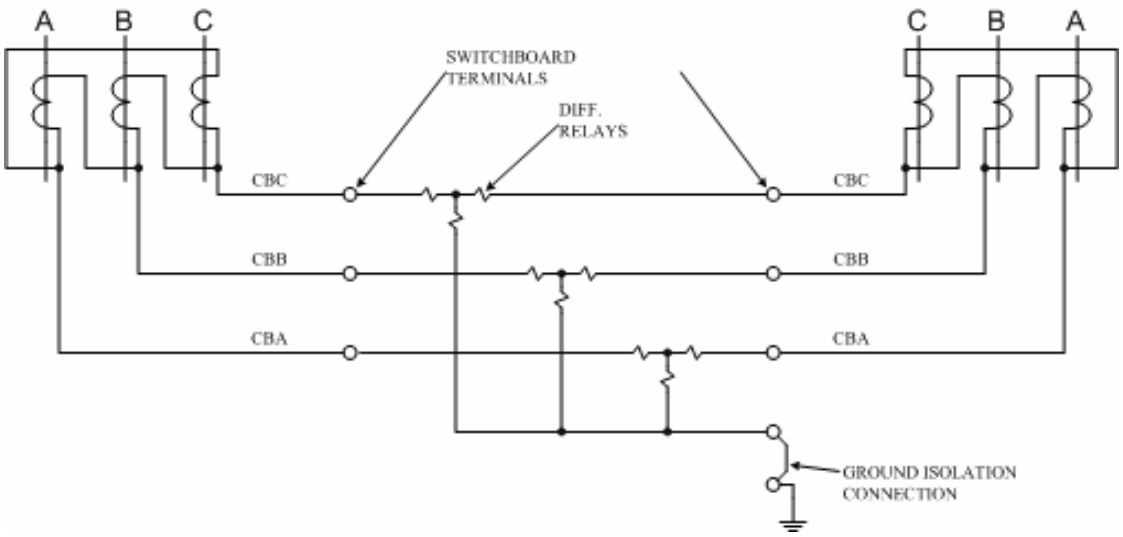

Figure 15—Grounding secondary circuits of delta-delta connected CTs used for differential protection of transformers

Copyright © 2006 IEEE. All rights reserved.

Copyright The Institute of Electrical and Electronics Engineers, Inc.
Provided by IHS under license with IEEE
No reproduction or networking permitted without license from IHS
Not for Resale

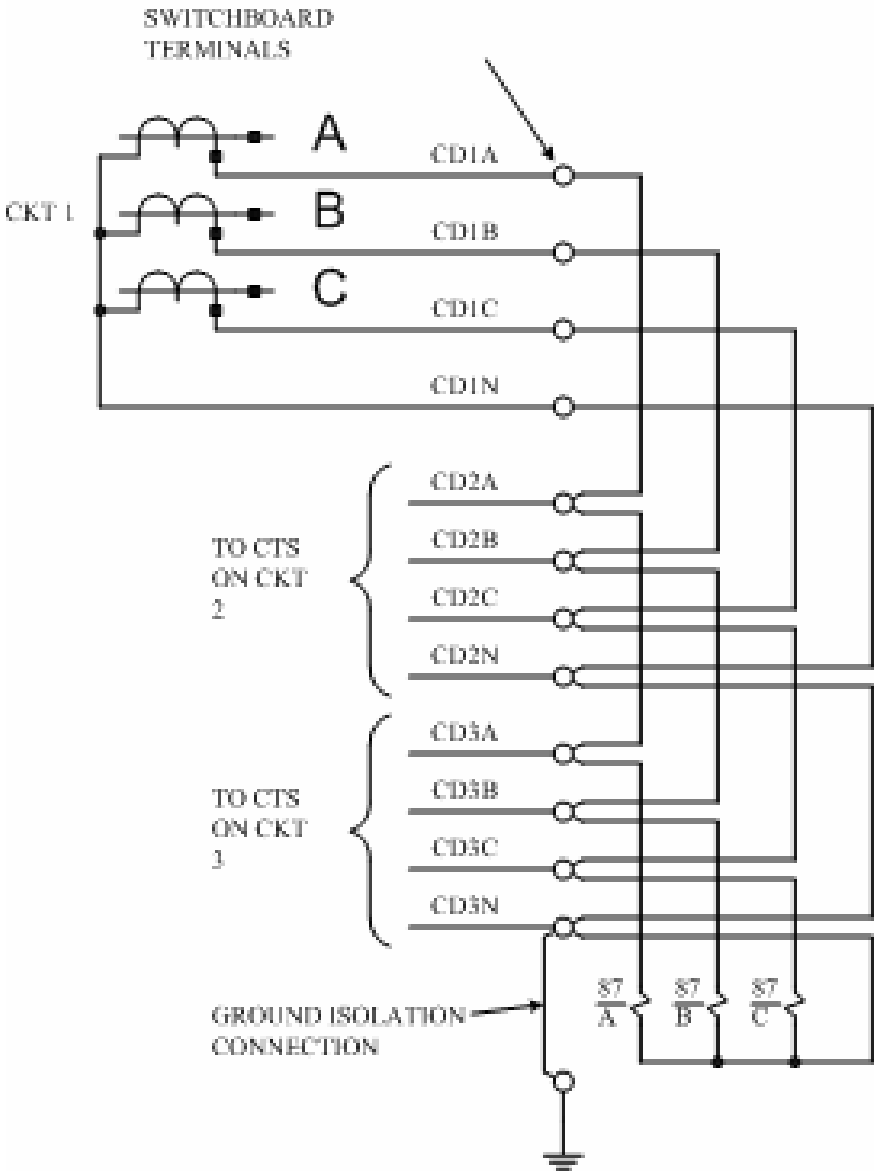

Figure 16—Grounding of the secondary circuits of CTs used for a high-impedance bus differential protection scheme for a single-bus station

Copyright © 2006 IEEE. All rights reserved.

Copyright The Institute of Electrical and Electronics Engineers, Inc.
Provided by IHS under license with IEEE
No reproduction or networking permitted without license from IHS
Not for Resale

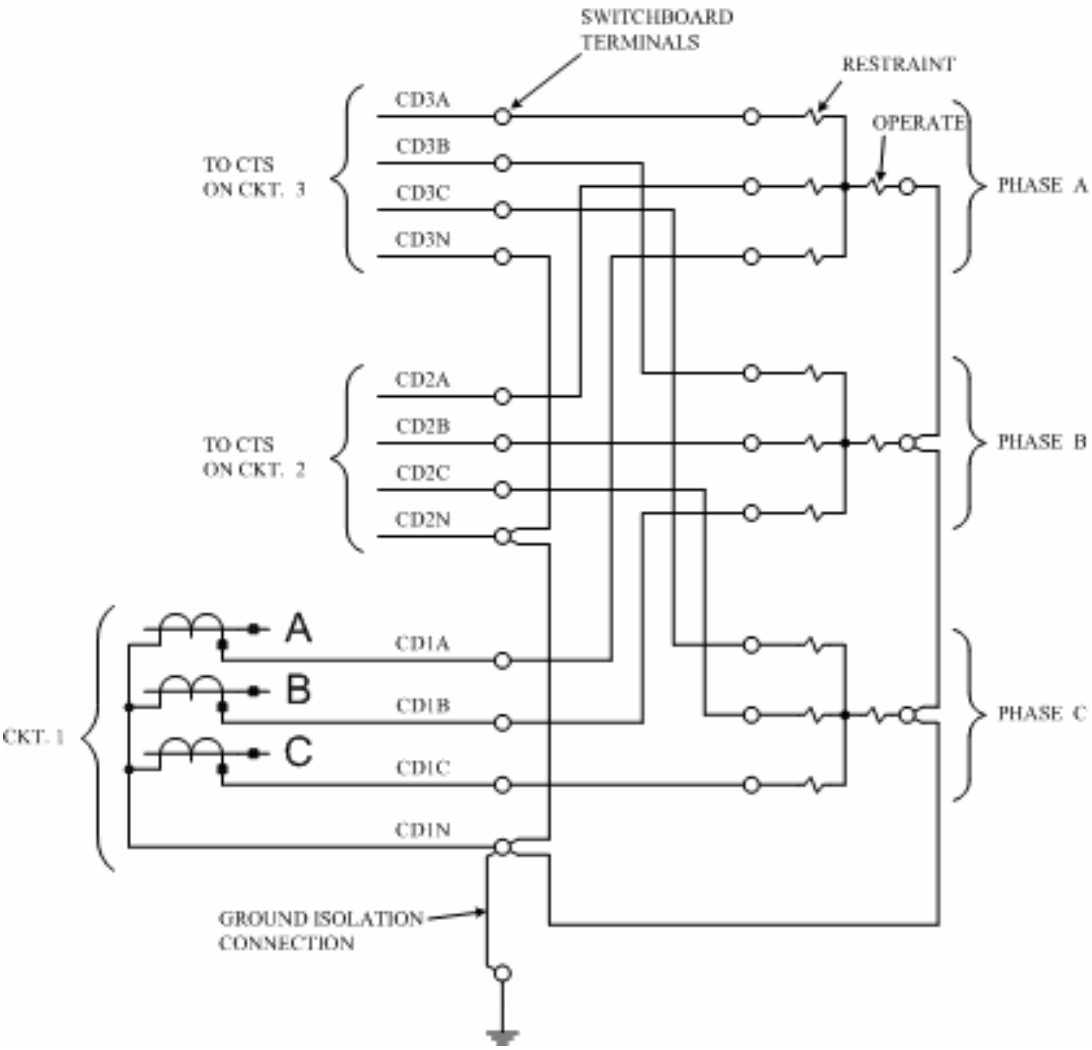

Figure 17—Grounding of the secondary circuits of CTs used for a percentage bus differential protection scheme for a single-bus station

Copyright © 2006 IEEE. All rights reserved.

Copyright The Institute of Electrical and Electronics Engineers, Inc.
Provided by IHS under license with IEEE
No reproduction or networking permitted without license from IHS
Not for Resale

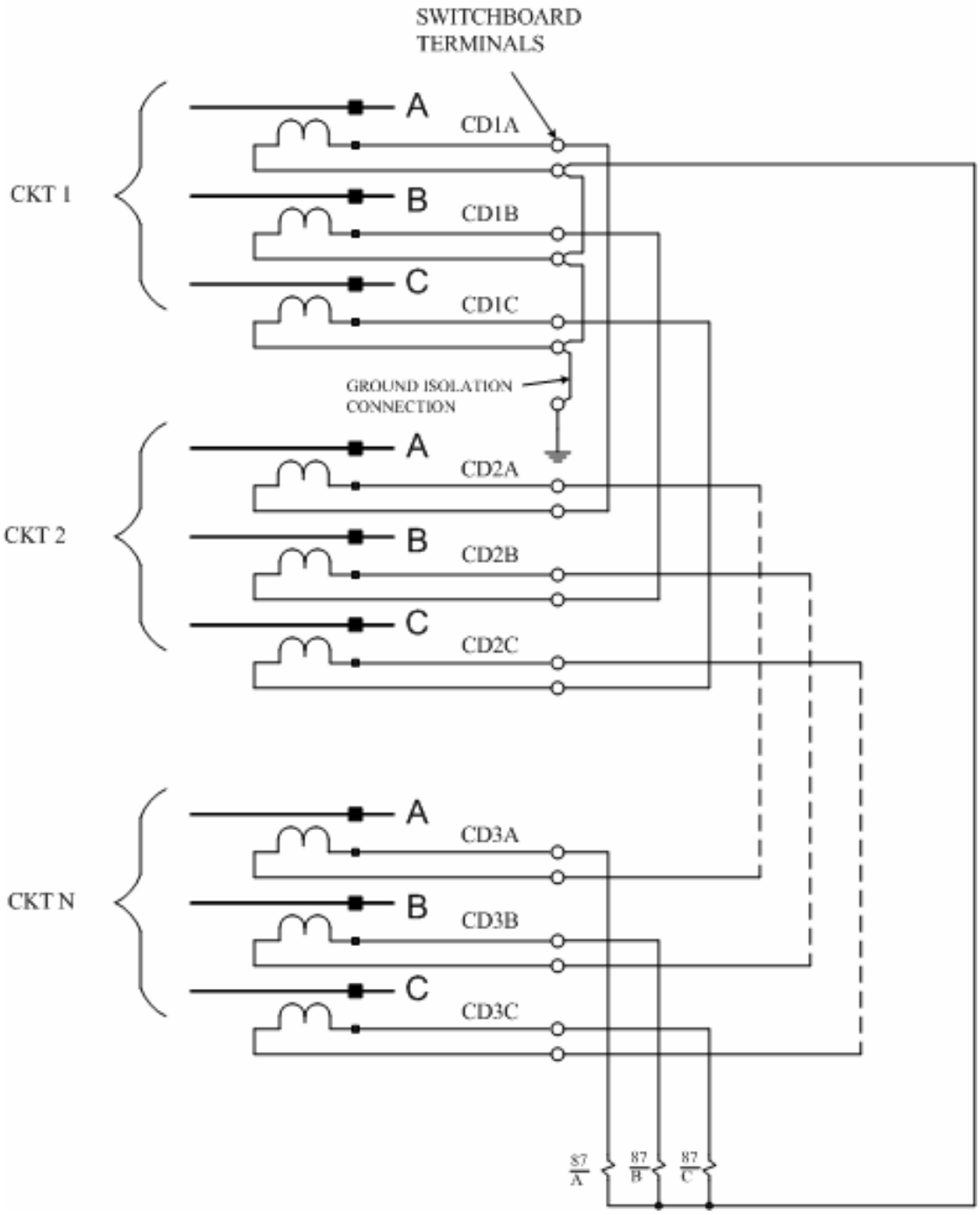

Figure 18—Grounding of secondary circuits of linear couplers used for bus differential protection scheme for a single-bus station

Copyright © 2006 IEEE. All rights reserved.

Copyright The Institute of Electrical and Electronics Engineers, Inc.
Provided by IHS under license with IEEE
No reproduction or networking permitted without license from IHS
Not for Resale

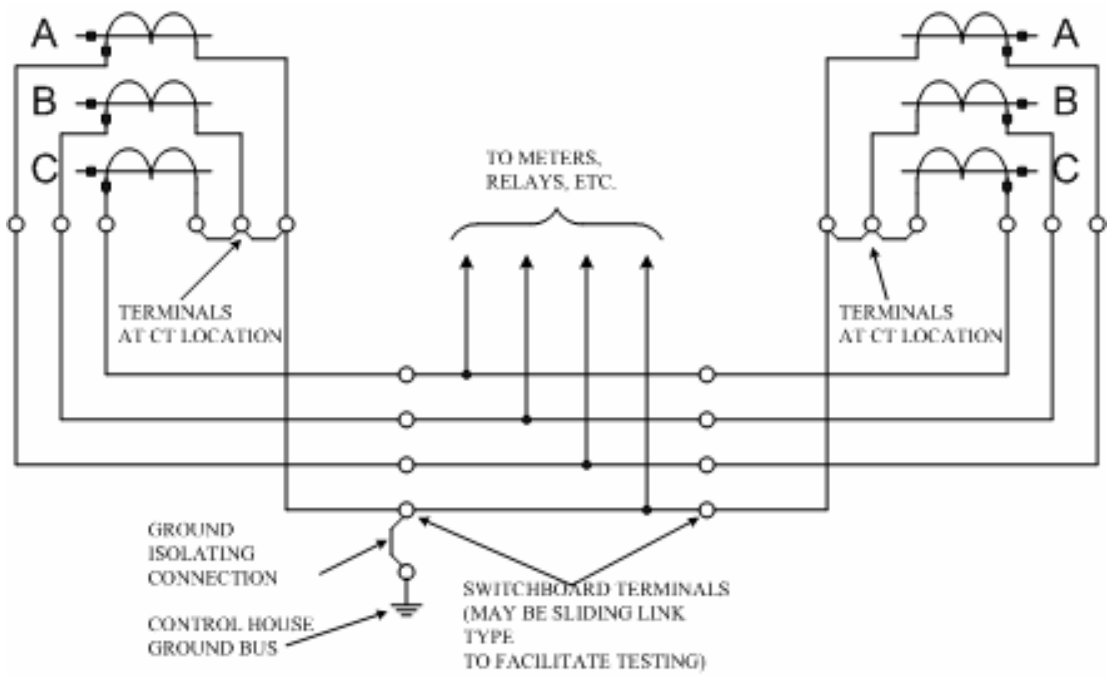

Figure 19—Grounding of the secondary circuits of CTs used for protecting circuits connected to ring-bus and breaker-and-a-half bus configurations

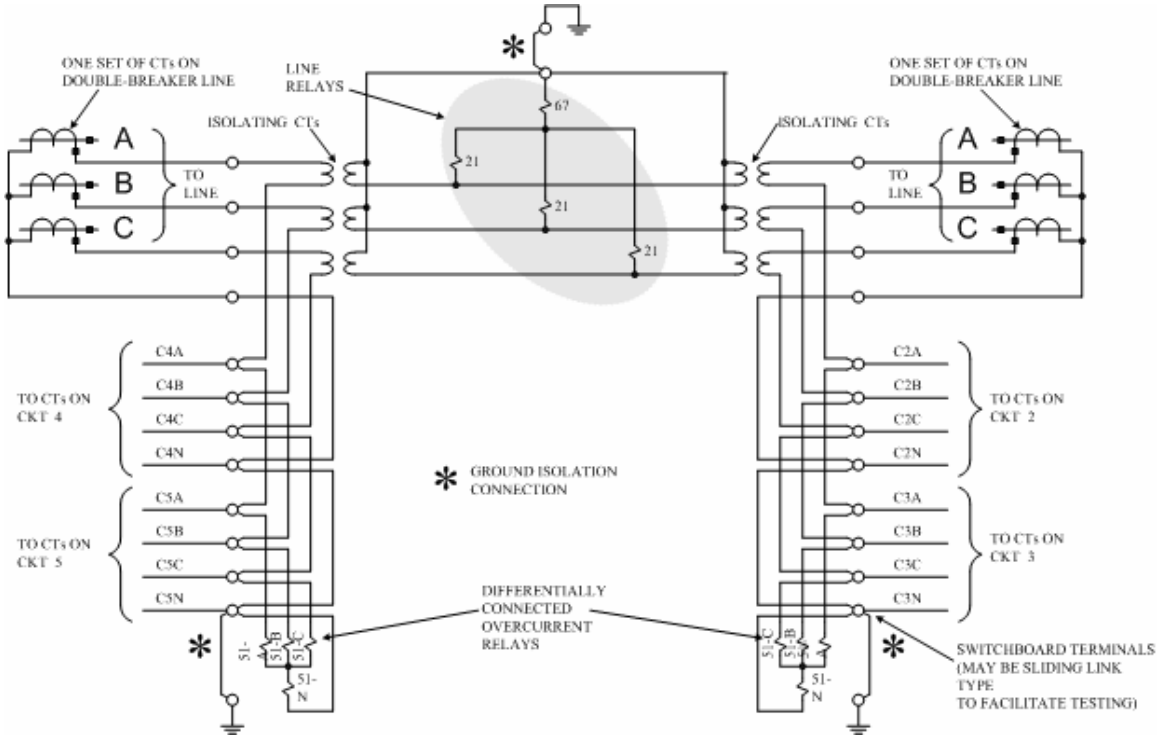

Figure 20—Grounding of secondary circuits of multiple-use CTs

Copyright © 2006 IEEE. All rights reserved.

Copyright The Institute of Electrical and Electronics Engineers, Inc.
Provided by IHS under license with IEEE
No reproduction or networking permitted without license from IHS
Not for Resale

6. Grounding of instrument transformer cases and cases of connected equipment

6.1 Metallic or conductive case grounding

Metallic or conductive cases and frames of instrument transformers and cases of connected equipment, such as instruments, meters, and relays, which have accessible conductive parts that could become live in case of a fault, are bonded together and effectively connected to a grounding system in accordance with the recommendations of the NEC and the NESC.

In general, the grounding conductor size is at least equal to the largest wire size used in the windings of the instrument transformer, relay, meter, or instrument, but in no case is the grounding conductor smaller than No. 12 AWG copper (area = 3.310 mm^2 at 20 °C) or its conductive equivalent as required by NESC®. If the instrument transformer, relay, meter, or instrument has a metal case or frame that is mounted by using conductive hardware to a metal panel, switchboard, or other conductive structure, which is adequately grounded, a separate connection to ground is not necessarily provided.

6.2 Internal conductive parts—insulated cases

In some cases, metallic structures, in which relays or meters are placed, are enclosed in insulating materials, such as a relay or a meter in a metallic frame contained in a plastic case. The metallic structure, in which the relay or meter is placed, is therefore isolated from ground. If the metallic structure or parts of it are accessible to personnel performing maintenance and tests, those parts are connected to ground as described in 6.1. If, for functional reasons, these structural parts must remain isolated from ground and they are to be accessible to personnel, a warning is placed on the equipment calling this hazard to the attention of the maintenance personnel.

6.3 Ungrounded metallic or conductive case

If the cases of equipment are not grounded for reasons specified in the NEC, they are protected by suitable barriers or elevated to prevent contact if operating at or above 1000 V. If operating below 1000 V, mats of insulating rubber or other suitable floor insulation are provided for the protection of personnel. If no live or conductive parts or wiring are exposed or accessible, the case is not grounded.

7. Exceptions to grounding

Exceptions to grounding are permissible and sometimes required where advantages obtained by not grounding (in certain instances or in certain types of installations) are considered to outweigh the safety or other advantages obtained by grounding. Such exceptions should comply with the recommendations of the NEC. Grounding exceptions are generally permissible under the following circumstances:

a) If the primary windings of instrument transformer circuits are connected to circuits of less than 1000 V with no live parts or wiring exposed or accessible to other than qualified persons, the circuits may not be grounded.

b) For instrument transformer cases, the cases or frames of CTs may not be grounded if the primary windings are not over 150 V to ground and are used exclusively to supply current to meters.

Copyright © 2006 IEEE. All rights reserved.

Copyright The Institute of Electrical and Electronics Engineers, Inc.
Provided by IHS under license with IEEE
No reproduction or networking permitted without license from IHS
Not for Resale

c) Cases of instruments, meters, and relays operating at less than 1000 V on switchboards having exposed live parts on the front of panels are not usually grounded. Mats of insulating rubber or other suitable floor insulation are provided where the voltage to ground exceeds 150 V.

d) Instruments, meters, and relays, whose current-carrying parts operate at voltages to ground of 1000 V and over, are isolated by elevating them or protecting them by suitable barriers, grounded metal or insulating covers, or guards. In such situations, the cases are not usually grounded.

WARNING

When exceptions to grounding, as suggested here, are considered for implementation, the reader should make certain to meet requirements stipulated in the NEC and NESC.
Article 90.2 (A) of the NEC lists the installations that are covered by the Code, and Article 90.2 (B) lists the installations that are not covered by the Code. For immediate reference of the readers, Article 90.2 of the NEC is reproduced in Annex C.

8. Grounding of low-energy transducers

8.1 General

A prime example of a low-energy sensor is an optical voltage or current transducer with an optical-to-electronic interface. The sensors are either located on the bus at high potential or are embedded inside power apparatus or insulators. The optical signal is transmitted over fiber-optic cables to the interface device where it is converted to an electrical signal scaled and formatted for use in protective relays and measuring devices. The fiber-optic cable and the conversion module provide the isolation from the high-voltage environment. The signal leads from the conversion module are "equivalent" to the CT leads in the conventional case. The optical-to-electrical conversion module is usually located in the control room, but may also be located in the switchyard near the high-voltage equipment on which the sensor is placed. The interaction between the sensor and the conversion module is a proprietary scheme of each manufacturer. It is the output of the conversion module that is connected to suitably designed relays or other substation measuring equipment. The interface between the conversion module and the relay may contain intermediate summing or ratio-adjusting amplifiers required to add or subtract the outputs of more than one transducer for measurement by a single device. The designs of the applications ensure that the ground potential differences between the connected devices do not exceed 20 V when the maximum fault current is experienced.

The standardized low-energy measurement signal from the conversion module is characterized as an analog electrical signal of ±11.3 V peak, at a maximum power of well below 1 W (a high-impedance source). Output levels of well below 1 W suggest the use of solid-state or microprocessor-based, low-burden measuring devices. High-energy input electromechanical relays are not considered suitable for use with these transducers.

8.2 Interconnection wiring practices

Examples of single and multiple sensors providing inputs to a relay or an intelligent electronic device (IED), or to multiple relays or IEDs, are shown in Figure 21, Figure 22, and Figure 23. In these figures, the "Low Energy Sensor" includes the sensor and its conversion module. They are provided to illustrate suitable interconnections for distances of less than 50 m within the control house, where the ground potential differences among connected systems is expected to be less than 20 V during faults.

Copyright © 2006 IEEE. All rights reserved.

Copyright The Institute of Electrical and Electronics Engineers, Inc.
Provided by IHS under license with IEEE
No reproduction or networking permitted without license from IHS
Not for Resale

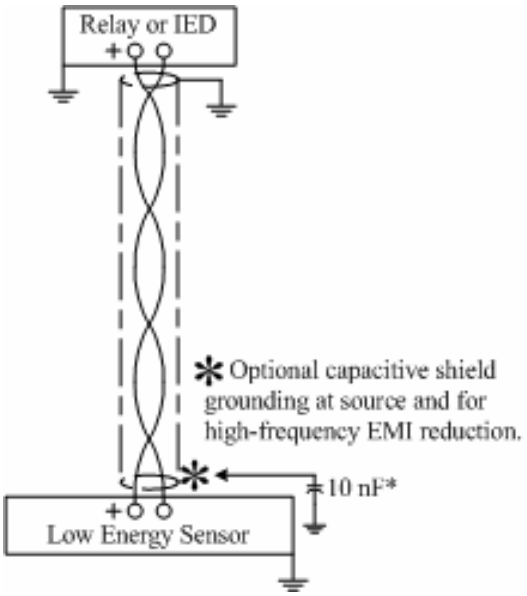

Figure 21—A single low-energy sensor for providing input to a relay or IED

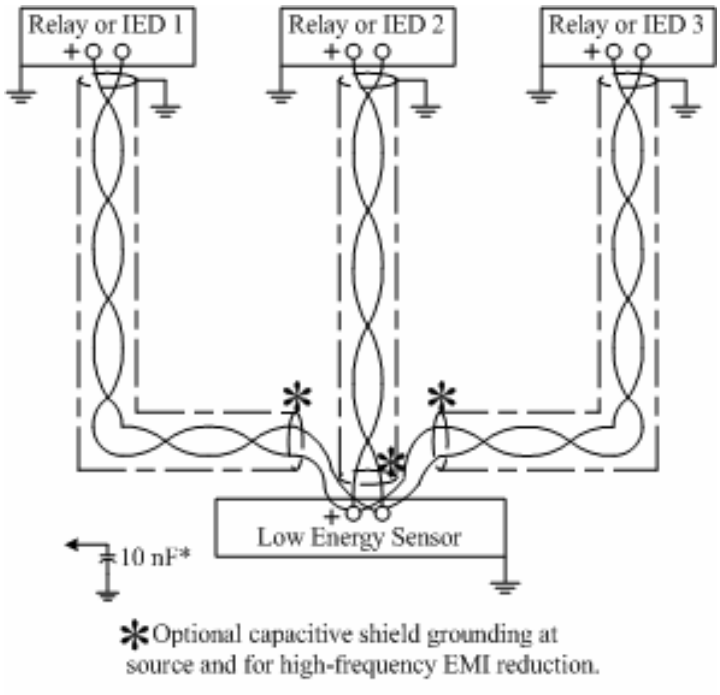

Figure 22—A single low-energy sensor for providing input to multiple relays or IEDs

Copyright © 2006 IEEE. All rights reserved.

Copyright The Institute of Electrical and Electronics Engineers, Inc.
Provided by IHS under license with IEEE
No reproduction or networking permitted without license from IHS
Not for Resale

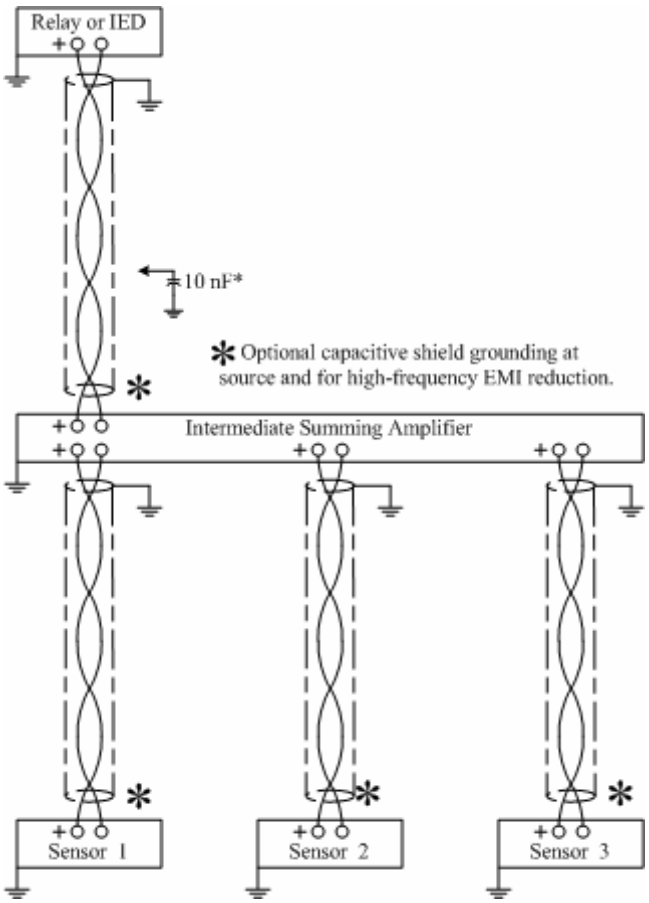

Figure 23—Multiple low-energy sensors providing inputs to a relay or IED

Some key features of these figures are as follows:

a) Neither of the two twisted conductors that carry the low-level signal is grounded at any location.

b) Only one shield termination at the relay or at the receiving end of the connection is directly grounded. For multi-sensor, multi-relay installations, only one shield point is directly grounded. The shields provide electrostatic shielding only; they do not provide electromagnetic shielding at power frequency.

c) Only one sensor or relay with unbalanced or nonreversible polarity that internally connects the common or nonpolarity interface terminal directly to safety ground can be used in an installation.

d) Optional 10 nF ceramic disc capacitors may be connected from shield to ground at each ungrounded terminal of the shield. This would provide improved high-frequency electromagnetic shielding. These capacitors may be installed by the user or may be included inside the equipment received from the vendors. These capacitors are generally helpful for short wiring runs, but have been known to produce unpredictable high-frequency shielding results for long wiring runs.

For connections involving switchyard-mounted equipment, where these benign conditions may not apply, the user engineers more elaborate schemes of shielding, shield grounding, and device isolation. More details are given in IEEE Std 525. An additional robust outer shield, grounded at both ends to conduct current that counters and shields low-level measurement signals from magnetic and electromagnetic fields at power frequencies, is used.

Copyright © 2006 IEEE. All rights reserved.

Copyright The Institute of Electrical and Electronics Engineers, Inc.
Provided by IHS under license with IEEE
No reproduction or networking permitted without license from IHS
Not for Resale

Annex A

(informative)

Issues to consider for shielded cable applications for instrument transformers

A.1 General

If shielded cables are used to form the secondary circuits of the instrument transformers, the following issues are usually considered.

The current-carrying capacity of the shield is considered while selecting the cable. When fault currents flow in the conductor of the cable, currents are induced in the shield due to its electromagnetic coupling with the conductors. The current-carrying capacity of the shield is usually more than the maximum current that is expected to flow in it. If the shield is not able to carry the induced currents, a ground conductor of large cross section (normally 2/0 copper or larger) is run in parallel (normally in the cable trough) and is tied to the grounding grid at regular intervals. This ensures that most of the fault current flows in the grounding grid rather than in the shield.

A corrugated or spiral wrap design of the shield surrounds the conductors symmetrically. When currents flow in the shield, they do not induce currents in the conductors of the cable. The shield is grounded at both ends of the cable so that electromagnetically induced currents are allowed to flow in the shield during a fault. The flow of the current in the shield cancels the magnetic noise as well as the electrostatic noise. The ground connections are made as short as possible to minimize the inductance. Moreover, the ground connections are of sufficient size to ensure that they do not burn off during faults.

Shields that are made with a drain wire and an aluminum foil are not grounded at both ends; they are grounded at one end only. In such cases, grounding at both ends would cause currents to flow in the drain wire during faults; these currents in turn would induce currents in the conductor of the cable. This type of shield is not normally used for outdoor instrument transformers.

All of the conductors from a set of instrument transformers (i.e., a set of three CTs or a set of three VTs) should be in the same cable to minimize noise pickup and to avoid loops. Also, the cables are of adequate size to ensure that the voltage drop is not excessive.

A.2 CTs installed over shielded cables, metal bushing collars, or conduits

Window-type CTs operate (with negligible performance difference) when they are installed over a metallic conduit, metal collar of a transformer bushing, or a metallic shielded cable. There are two possible options for grounding the shield in these cases. The first option is that the shield is grounded at only one end of the CT. The second option is that the shield is grounded at both ends. The shield at the end, where there is no CT, is connected to ground. The end of the shield near the CT is grounded by a wire that passes through the CT window, as shown in Figure A.1. The current flowing in the shield flows through the grounding lead, which is also in the CT window. The fluxes produced by the current flow in the shield and in the grounding lead are equal but opposite in direction and, therefore, the output of the CT is not affected by the flow of current in the shield.

IEEE Std 525 and IEEE Std 1143 are two references that provide further information on this subject.

Copyright © 2006 IEEE. All rights reserved.

Copyright The Institute of Electrical and Electronics Engineers, Inc.
Provided by IHS under license with IEEE
No reproduction or networking permitted without license from IHS
Not for Resale

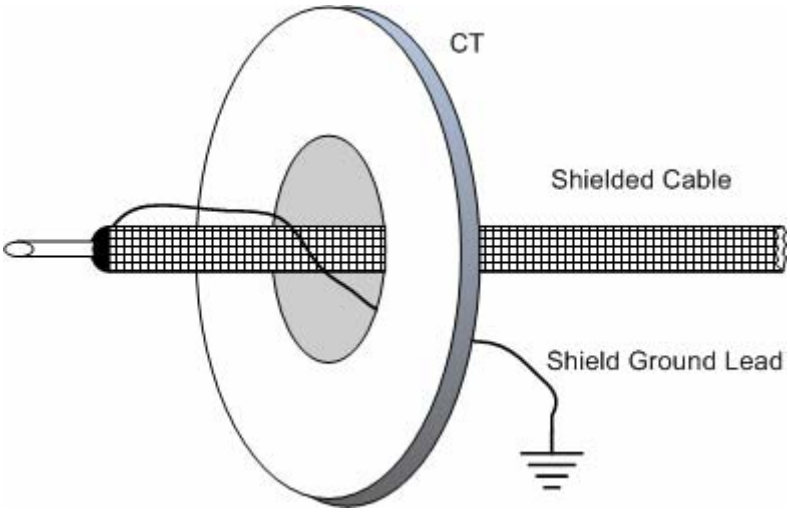

Figure A.1—Grounding of a shielded cable with a CT for measuring current flowing in the cable

Copyright © 2006 IEEE. All rights reserved.

Copyright The Institute of Electrical and Electronics Engineers, Inc.
Provided by IHS under license with IEEE
No reproduction or networking permitted without license from IHS
Not for Resale

Annex B

(informative)

IEEE standards reviewed by the I-13—Revision of C57.13.3 Working Group

Many IEEE standards deal with the subject of grounding of electrical circuits. While information was used from several guides and standards, the following standards were specifically reviewed by the I-13—Revision of C57.13.3 Working Group (WG). Key observations made by the WG are presented in this annex.

— NESC-2002

— IEEE Std 80™-2000 [B1]

— IEEE Std 142™-1991

— IEEE Std 242™-2001

— IEEE Std 518™-1982 (Reaff 1996) [B4]

— IEEE Std 525™-1992

— IEEE Std 665™-1995

— IEEE Std 1050™-1996 [B5]

— IEEE Std C37.92™-2004 [B7]

— IEEE Std C62.92™-2000

The concepts of grounding instrument transformer secondary circuits described in this guide are in agreement with the concepts of IEEE Std 525, IEEE Std 665, and IEEE Std 518-1982 (Reaff 1996) [B4].

Clause 6.2.1.2 of IEEE Std 242 specifies that the VT secondary circuits used for protection devices and for synchronizing of machines should have two designated reference points, an equipment-ground reference point, and a common-control reference point. This is followed in this guide.

While IEEE Std 242 covers instrument transformers, there are no discussions on grounding of their secondary circuits except that grounding is illustrated in Figure 3-7, Figure 3-8, and Figure 3-9 of IEEE Std 142 [B3]. These figures support single-point grounding of the CT secondary circuits.

IEEE Std C62.92 does not address specific requirements for grounding instrument transformers and cases except in item d) of 10.4, which specifies “Enclosure return currents also cannot be permitted to flow through any mounted current transformers.” The enclosure in this clause refers to equipment enclosure in GIS substations.

Copyright © 2006 IEEE. All rights reserved.

Copyright The Institute of Electrical and Electronics Engineers, Inc.
Provided by IHS under license with IEEE
No reproduction or networking permitted without license from IHS
Not for Resale

Annex C

(informative)

Article 90.2—Scope of the NEC

The scope of the NEC, Article 90.2, is reproduced in this annex.

WARNING

All care has been taken to correctly reproduce Article 90.2 of the NEC, but it is not the original document. The reader should refer to the NEC for the authentic documentation.

90.2 Scope.

(A) Covered. This *Code* covers the installation of electrical conductors, equipment and raceways; signaling and communications conductors, equipment and raceways; and optical fiber cables and raceways for the following:

(1) Public and private premises, including buildings, structures, mobile homes, recreational vehicles and floating buildings

(2) Yards, lots, parking lots, carnivals, and industrial substations

FPN to (2): For additional information concerning such installations in an industrial or multibuilding complex, see ANSI C2-2002, *National Electrical Safety Code*.

(3) Installations of conductors and equipment that connect to the supply of electricity

(4) Installations used by the electric utility, such as office buildings, warehouses, garages, machine shops, and recreational buildings, that are not an integral part of a generating plant, substation or control center.

(B) Not Covered. This *Code* does not cover the following:

(1) Installations in ships, watercraft other than floating buildings, railway rolling stock, aircraft or automotive vehicles other than mobile homes and recreation vehicles
FPN: Although the scope if this *Code* indicates that the *Code* does not cover installations in ships, portions of this *Code* are incorporated by reference into Title 46, *Code of Federal Regulations,* Parts 110-113.

(2) Installations underground in mines and self-propelled mobile surface mining machinery and its attendant electrical trailing cable

(3) Installations of railways for generation, transformation, transmission, or distribution of power used exclusively for operation of rolling stock or installations used exclusively for signaling and communications purposes

(4) Installations of communications equipment under the exclusive control of communications utilities located outdoors or in building spaces used exclusively for such installations

Copyright © 2006 IEEE. All rights reserved.
--`,,```,,,,````-`-`,,`,,`,`,,`---
Copyright The Institute of Electrical and Electronics Engineers, Inc.
Provided by IHS under license with IEEE
No reproduction or networking permitted without license from IHS
Not for Resale

(5) Installations under the exclusive control of an electric utility where such installations

a. Consist of service drops or service laterals, and associated metering, or

b. Are located in legally established easements, rights-of-way, or by other agreements either designated by or recognized by public service commissions, utility commissions, or other regulatory agencies having jurisdiction for such installations, or

c. Are on property owned or leased by the electric utility for the purpose of communications, metering, generation, control, transformation, transmission, or distribution of electric energy.

FPN to (4) and (5): Examples of utilities may include those entities that are typically designated or recognized by governmental law or regulation by public service/utility communications and that install, operate, and maintain electric supply (such as generation, transmission or distribution systems) or communication systems (such as telephone, CATV, Internet, satellite or data services). Utilities may be subject to compliance with codes and standards covering their regulated activities as adopted under governmental law or regulation. Additional information can be found through consultation with the appropriate governmental bodies, such as state regulatory commissions, Federal Energy Regulatory Commission, and Federal Communications Commission.

(C) Special Permission: The authority having jurisdiction for enforcing this *Code* may grant exception for the installation of conductors and equipment that are not under the exclusive control of the electric utilities and are used to connect the electric utility supply system to the service-entrance conductors of the premises served, provided such installations are outside a building or terminate immediately inside a building wall.

--`,,```,,,,````-`-`,,`,,`,`,,`---
Copyright © 2006 IEEE. All rights reserved.

Copyright The Institute of Electrical and Electronics Engineers, Inc.
Provided by IHS under license with IEEE
No reproduction or networking permitted without license from IHS
Not for Resale

Annex D

(informative)

Survey of grounding practices

The following survey form was mailed to the North American Relay Engineers, whose addresses are maintained by the Power System Relaying Committee (PSRC). A total of 199 survey forms were sent out, and 72 responses were received. The answers provided by the respondents were mostly descriptive in nature and cannot be summarized in this annex.

Two issues worth reporting from the survey are as follows:

— Approximately one-third of the respondents do not ground VTs "at the first point of use" as described in this guide. The WG is of the opinion that grounding "at the first point of use" is better than grounding at other locations.

— Almost all respondents indicated that CTs are grounded "at the first point of use" as described in this guide.

PSRC Working Group I13 application survey

Introduction:

The I13 Working Group is revising ANSI/IEEE C57.13.3-1983 Guide for the Grounding of Instrument Transformer Secondary Circuits and Cases and is seeking input from users that have relaying applications in substations. This input will help the working group confirm existing techniques and policies as well as update the document to reflect the latest methods used. The scope of the guide is written below:

> "This guide contains general and specific recommendations for grounding current and voltage transformer secondary circuits and cases of connected equipment. The practices recommended apply to all transformers of this type, including capacitive voltage transformers and linear couplers, irrespective of primary voltage or whether the primary windings are connected to, or are in, power circuits or are connected in the secondary circuits of other transformers as auxiliary cts or vts. Although most diagrams included in this guide show relaying applications, the recommended practices apply equally to metering and other areas where instrument transformers are used.
>
> Exceptions to grounding are permissible or sometimes required where advantages obtained by not grounding, in certain instances or in certain types of installations, are considered to outweigh the safety or other advantages obtained by grounding. Such exceptions should comply with the recommendations of ANSI C1-1987, even though utilities are presently exempt from the requirements of this code."

Survey

(Please select choice or explain)

1. Does the grounding policy at your company allow a CT secondary circuit to be grounded at more than one location (multiple grounding)?
   a) No
   b) Yes If yes, what is your policy? _____

Copyright © 2006 IEEE. All rights reserved.

Copyright The Institute of Electrical and Electronics Engineers, Inc.
Provided by IHS under license with IEEE
No reproduction or networking permitted without license from IHS
Not for Resale

2. If the grounding policy at your company allows a CT secondary circuit to be grounded at one location only, which is that location?
    a) At the CT location
    b) At the first available point within the control house
    c) At the point of first application
    d) Other, please explain _____

3. Does the grounding policy at your company allow a VT secondary circuit to be grounded at more than one location (multiple grounds)?
    a) No
    b) Yes If yes, what is your policy? _____

4. If the grounding policy at your company allows a VT secondary circuit to be grounded at one location only, which is that location?
    a) At the VT location
    b) At the first available point within the control house
    c) At the point of first application
    d) Other, please explain _____

5. Is it a practice in your company to ground unused, shorted CT secondaries?
    a) No
    b) Yes

5a. If the answer to Question 5 is yes, where do you ground unused CT secondaries?
    a) At the CT location
    b) At a terminal cabinet or panel if the ct is wired to the control house
    c) Other, please explain _____

6. Describe construction of ground grid

    _____

    _____

7. Is CT and VT transformer case grounded at a different location than the location where the secondary circuit is grounded?
    a) No
    b) Yes If yes, at what location? _____

8. What type and size of conductor is used for connecting the CT and VT secondary circuits to the grounding grid?
    a) Braid _____ Size _____
    b) Stranded _____ Size _____
    c) Solid _____ Size _____
    d) Other, please describe _____

Copyright © 2006 IEEE. All rights reserved.

Copyright The Institute of Electrical and Electronics Engineers, Inc.
Provided by IHS under license with IEEE
No reproduction or networking permitted without license from IHS Not for Resale

9. Does your company use shielded cables for connecting instrument transformers to the control panels? Please fill in the table below for each voltage class.

Voltage class	Use shielded cables? Y/N
Up to 69 kV	
69 kV < V < 138 kV	
Above 138 kV	

10. What type of shield is used? Please fill in the table below for each voltage class.

Voltage class	Corrugated	Spiral wrapped	Drain wire with aluminum foil	Armored	Other (please describe)
Up to 69 kV					
69 kV < V < 138 kV					
Above 138 kV					

11. Where is the shield of the cable (referred in 9) grounded?
    a) At the CT location
    b) At the first available point within the control house
    c) At the point of first application
    d) Other, please explain _____

12. If you ground the shield at more than one point, have you had problems with circulating currents in the shield or damage to the shield from faults?
    a) No
    b) Yes If yes, at what voltage levels and in what applications?

    _____

    _____

13. Where do you ground spare conductors in your instrument transformer secondary circuit cables?

    _____

    _____

In the event we need subsequent clarification on your responses, please fill in the contact information below:

Name _____

Company _____

Email address _____

Copyright © 2006 IEEE. All rights reserved.

Copyright The Institute of Electrical and Electronics Engineers, Inc.
Provided by IHS under license with IEEE
No reproduction or networking permitted without license from IHS
Not for Resale

Annex E

(informative)

Bibliography

[B1] IEEE Std 80™-2000, IEEE Guide for Safety in AC Substation Grounding.[6, 7]

[B2] IEEE 100™, *The Authoritative Dictionary of IEEE Standards Terms,* Seventh Edition.

[B3] IEEE Std 142™-1991, IEEE Recommended Practice for Grounding of Industrial and Commercial Power Systems.

[B4] IEEE Std 518™-1982 (Reaff 1996), IEEE Guide for the Installation of Electrical Equipment to Minimize Electrical Noise Inputs to Controllers from External Sources.

[B5] IEEE Std 1050™-1996, IEEE Guide for Instrumentation and Control Equipment Grounding in Generating Stations.

[B6] IEEE Std 1100™-1999, IEEE Recommended Practice for Powering and Grounding Electronic Equipment.

[B7] IEEE Std C37.92™-2004, IEEE Trial Use Standard for Low Energy Analog Signal Inputs to Protective Relaying.

[B8] IEEE Std C37.100™-1992, IEEE Standard Definitions for Power Switchgear.

[B9] IEEE Std C37.103™-2004, IEEE Guide for Differential and Polarizing Relay Circuit Testing.

[B10] IEEE Std C57.13.1™-1981 (Reaff 1999), IEEE Guide for Field Testing of Relaying Current Transformers.

[6] The IEEE standards or products referred to in this clause are trademarks of the Institute of Electrical and Electronics Engineers, Inc.
[7] IEEE publications are available from the Institute of Electrical and Electronics Engineers, 445 Hoes Lane, P.O. Box 1331, Piscataway, NJ 08855-1331, USA (http://standards.ieee.org/).

Copyright © 2006 IEEE. All rights reserved.

Copyright The Institute of Electrical and Electronics Engineers, Inc.
Provided by IHS under license with IEEE
No reproduction or networking permitted without license from IHS
Not for Resale