C57.12.40™

IEEE Standard Requirements for Secondary Network Transformers, Subway and Vault Types (Liquid Immersed)

IEEE Power Engineering Society

Sponsored by the
Transformers Committee

IEEE
3 Park Avenue
New York, NY 10016-5997, USA

15 September 2006

IEEE Std C57.12.40™-2006
(Revision of
ANSI C57.12.40-2000)

Copyright The Institute of Electrical and Electronics Engineers, Inc.
Provided by IHS under license with IEEE
No reproduction or networking permitted without license from IHS

Not for Resale

Copyright The Institute of Electrical and Electronics Engineers, Inc.
Provided by IHS under license with IEEE
No reproduction or networking permitted without license from IHS
Not for Resale

Recognized as an
American National Standard (ANSI)

IEEE Std C57.12.40™-2006
(Revision of ANSI C57.12.40-2000)

IEEE Standard Requirements for Secondary Network Transformers, Subway and Vault Types (Liquid Immersed)

Sponsor
Transformers Committee
of the
IEEE Power Engineering Society

Approved 5 September 2006

American National Standards Institute

Approved 30 March 2006

IEEE-SA Standards Board

Copyright The Institute of Electrical and Electronics Engineers, Inc.
Provided by IHS under license with IEEE
No reproduction or networking permitted without license from IHS

Not for Resale

Abstract: This standard is intended for use as a basis for establishing the performance, interchangeability, and safety of the equipment covered and to assist in the proper selection of such equipment.
Keywords: copper-bearing steel, grounding switch, magnetizing switch, network, subway, transformer, vault

The Institute of Electrical and Electronics Engineers, Inc.
3 Park Avenue, New York, NY 10016-5997, USA

Copyright © 2006 by the Institute of Electrical and Electronics Engineers, Inc.
All rights reserved. Published 15 September 2006. Printed in the United States of America.

IEEE is a registered trademark in the U.S. Patent & Trademark Office, owned by the Institute of Electrical and Electronics Engineers, Incorporated.

Print: ISBN 0-7381-4964-0 SH95536
PDF: ISBN 0-7381-4965-9 SS95536

No part of this publication may be reproduced in any form, in an electronic retrieval system or otherwise, without the prior written permission of the publisher.

Copyright The Institute of Electrical and Electronics Engineers, Inc.
Provided by IHS under license with IEEE
No reproduction or networking permitted without license from IHS Not for Resale

IEEE Standards documents are developed within the IEEE Societies and the Standards Coordinating Committees of the IEEE Standards Association (IEEE-SA) Standards Board. The IEEE develops its standards through a consensus development process, approved by the American National Standards Institute, which brings together volunteers representing varied viewpoints and interests to achieve the final product. Volunteers are not necessarily members of the Institute and serve without compensation. While the IEEE administers the process and establishes rules to promote fairness in the consensus development process, the IEEE does not independently evaluate, test, or verify the accuracy of any of the information contained in its standards.

Use of an IEEE Standard is wholly voluntary. The IEEE disclaims liability for any personal injury, property or other damage, of any nature whatsoever, whether special, indirect, consequential, or compensatory, directly or indirectly resulting from the publication, use of, or reliance upon this, or any other IEEE Standard document.
The IEEE does not warrant or represent the accuracy or content of the material contained herein, and expressly disclaims any express or implied warranty, including any implied warranty of merchantability or fitness for a specific purpose, or that the use of the material contained herein is free from patent infringement. IEEE Standards documents are supplied "**AS IS**."

The existence of an IEEE Standard does not imply that there are no other ways to produce, test, measure, purchase, market, or provide other goods and services related to the scope of the IEEE Standard. Furthermore, the viewpoint expressed at the time a standard is approved and issued is subject to change brought about through developments in the state of the art and comments received from users of the standard. Every IEEE Standard is subjected to review at least every five years for revision or reaffirmation. When a document is more than five years old and has not been reaffirmed, it is reasonable to conclude that its contents, although still of some value, do not wholly reflect the present state of the art. Users are cautioned to check to determine that they have the latest edition of any IEEE Standard.

In publishing and making this document available, the IEEE is not suggesting or rendering professional or other services for, or on behalf of, any person or entity. Nor is the IEEE undertaking to perform any duty owed by any other person or entity to another. Any person utilizing this, and any other IEEE Standards document, should rely upon the advice of a competent professional in determining the exercise of reasonable care in any given circumstances.

Interpretations: Occasionally questions may arise regarding the meaning of portions of standards as they relate to specific applications. When the need for interpretations is brought to the attention of IEEE, the Institute will initiate action to prepare appropriate responses. Since IEEE Standards represent a consensus of concerned interests, it is important to ensure that any interpretation has also received the concurrence of a balance of interests. For this reason, IEEE and the members of its societies and Standards Coordinating Committees are not able to provide an instant response to interpretation requests except in those cases where the matter has previously received formal consideration. At lectures, symposia, seminars, or educational courses, an individual presenting information on IEEE standards shall make it clear that his or her views should be considered the personal views of that individual rather than the formal position, explanation, or interpretation of the IEEE.

Comments for revision of IEEE Standards are welcome from any interested party, regardless of membership affiliation with IEEE. Suggestions for changes in documents should be in the form of a proposed change of text, together with appropriate supporting comments. Comments on standards and requests for interpretations should be addressed to:

Secretary, IEEE-SA Standards Board
445 Hoes Lane
Piscataway, NJ 08854
USA

Authorization to photocopy portions of any individual standard for internal or personal use is granted by the Institute of Electrical and Electronics Engineers, Inc., provided that the appropriate fee is paid to Copyright Clearance Center. To arrange for payment of licensing fee, please contact Copyright Clearance Center, Customer Service, 222 Rosewood Drive, Danvers, MA 01923 USA; +1 978 750 8400. Permission to photocopy portions of any individual standard for educational classroom use can also be obtained through the Copyright Clearance Center.

Copyright The Institute of Electrical and Electronics Engineers, Inc.
Provided by IHS under license with IEEE
No reproduction or networking permitted without license from IHS
Not for Resale

Introduction

This introduction is not part of IEEE Std C57.12.40-2006, IEEE Standard Requirements for Secondary Network Transformers, Subway and Vault Types (Liquid Immersed).

This standard was originally a NEMA/ANSI standard last published as ANSI C57.12.40-2000. There were a number of editorial errors in that publication. This publication only corrects those editorial errors and now publishes the standard as an IEEE document.

Notice to users

Errata

Errata, if any, for this and all other standards can be accessed at the following URL: http://standards.ieee.org/reading/ieee/updates/errata/index.html. Users are encouraged to check this URL for errata periodically.

Interpretations

Current interpretations can be accessed at the following URL: http://standards.ieee.org/reading/ieee/interp/index.html.

Patents

Attention is called to the possibility that implementation of this standard may require use of subject matter covered by patent rights. By publication of this standard, no position is taken with respect to the existence or validity of any patent rights in connection therewith. The IEEE shall not be responsible for identifying patents or patent applications for which a license may be required to implement an IEEE standard or for conducting inquiries into the legal validity or scope of those patents that are brought to its attention.

Participants

At the time this draft standard was completed, the C57.12.40 Working Group had the following membership:

Brian Klaponski, *Chair*

Joseph Cultrera
Larry Dix
Richard Graham
Iqbal Hussain
Stan Kostyal
Don Mathews
Jock Moffat
Dan Mulkey
Carl Niemann
Paul Orehek
Leon Plaster
Pete Risse
A.L. Robinson
Ken Romano
Steve Schroeder
Giuseppe Termini

Copyright © 2006 IEEE. All rights reserved.

Copyright The Institute of Electrical and Electronics Engineers, Inc.
Provided by IHS under license with IEEE
No reproduction or networking permitted without license from IHS
Not for Resale

The following members of the balloting committee voted on this standard. Balloters may have voted for approval, disapproval, or abstention.

David Aho
Ali Al Awazi
Jim Antweiler
Stan J. Arnot
Edward Bertolini
David Blew
Alain Bolliger
Carl Bush
Tommy Cooper
John Crouse
R. Daubert
Larry Dix
Randall Dotson
Gary Engmann
Trilok Garg
Randall Groves
Bal Gupta
Wayne Hansen
Jeffrey Hartenberger
Edward Horgan, Jr.
Michael Horning
James D. Huddleston III
Mohammad Husain
Pe Saumen Kundu
Yuri Khersonsky
Brian Klaponski
Stanley Kostyal
Dennis Lee
Jason Lin
Gregory Luri
Al Maguire
John Matthews
Mark McGranaghan
Nigel McQuin
Dan Mulkey
Jerry Murphy
Ray Nicholas
Carl Niemann
Paul Orehek
Wes Patterson
Thomas Pekarek
Donald Platts
Alvaro Portillo
Peter Risse
Michael Roberts
Charles Rogers
Kenneth Romano
John Rossetti
Ronald Stoner
Dinesh Sankarakurup
Leo Savio
Stephen Schroeder
H. Jin Sim
David Singleton
Ronald Stahara
Alan Traut
Joe Watson
Dave Wiegand
James Wilson
William Wimmer

When the IEEE-SA Standards Board approved this standard on 30 March 2006, it had the following membership:

Steve M. Mills, *Chair*
Richard H. Hulett, *Vice Chair*
Judith Gorman, *Secretary*

Mark D. Bowman
Dennis B. Brophy
Joseph Bruder
Richard Cox
Bob Davis
Julian Forster*
Joanna N. Guenin
Mark S. Halpin
Raymond Hapeman
William B. Hopf
Lowell G. Johnson
Herman Koch
Joseph L. Koepfinger*
David J. Law
Daleep C. Mohla
Paul Nikolich
T. W. Olsen
Glenn Parsons
Ronald C. Petersen
Gary S. Robinson
Frank Stone
Malcolm V. Thaden
Richard L. Townsend
Joe D. Watson
Howard L. Wolfman

*Member Emeritus

Also included are the following nonvoting IEEE-SA Standards Board liaisons:

Satish K. Aggarwal, *NRC Representative*
Richard DeBlasio, *DOE Representative*
Alan H. Cookson, *NIST Representative*

Don Messina
IEEE Standards Program Manager, Document Development

Angela Ortiz
IEEE Standards Program Manager, Technical Program Development

Copyright © 2006 IEEE. All rights reserved.

Copyright The Institute of Electrical and Electronics Engineers, Inc.
Provided by IHS under license with IEEE
No reproduction or networking permitted without license from IHS
Not for Resale

Contents

1. Overview 1

1.1 Scope 1
1.2 Purpose 1

2. Normative references 1

3. Transformer performance requirements 2

3.1 Kilovolt-ampere ratings 2
3.2 Voltage rating and tap ratings 3
3.3 Angular displacement 3
3.4 Basic lightning impulse insulation levels (BILs) 3
3.5 Percent impedance 3
3.6 Audible sound levels 4

4. Tests 4

5. Primary disconnect and grounding switch 4

5.1 General 4
5.2 Primary switch electrical performance requirements 4
5.3 Primary switch mechanical features 6
5.4 Primary switch accessory equipment 7
5.5 Primary cable entrance 7

6. Construction 8

6.1 General 8
6.2 Corrosion resistance 8
6.3 Tank 9
6.4 Accessory equipment for transformer tanks 10
6.5 Dimensions 11

7. Bushings 12

7.1 Primary bushings 12
7.2 Secondary bushings 12
7.3 Terminal markings 12

8. Neutral termination 12

8.1 Primary neutral 12
8.2 Secondary neutral 12

9. Nameplate 13

10. Connections of transformer for shipment by manufacturer 13

Annex A (informative) Bibliography 19

Copyright © 2006 IEEE. All rights reserved.

Copyright The Institute of Electrical and Electronics Engineers, Inc.
Provided by IHS under license with IEEE
No reproduction or networking permitted without license from IHS
Not for Resale

IEEE Standard Requirements for Secondary Network Transformers, Subway and Vault Types (Liquid Immersed)

1. Overview

1.1 Scope

This standard is intended for use as a basis for establishing the performance, interchangeability, and safety of the equipment covered and to assist in the proper selection of such equipment.

1.2 Purpose

This standard covers certain electrical, dimensional, and mechanical characteristics and takes into consideration certain safety features of three-phase, 60 Hz, liquid-immersed, secondary network transformers with a three-position grounding switch, subway and vault types, rated 2500 kVA and smaller; primary 34 400 V and below; secondary 216Y/125 V and 480Y/277 V.

A subway-type network transformer is one that is suitable for frequent or continuous submerged operation.

A vault-type network transformer is one that is suitable for occasional submerged operation.

2. Normative references

The following referenced documents are indispensable for the application of this document. For dated references, only the edition cited applies. For undated references, the latest edition of the referenced document (including any amendments or corrigenda) applies.

ANSI C57.12.32-1994, Submersible Equipment – Enclosure Integrity.[1]

[1] ANSI publications are available from the Sales Department, American National Standards Institute, 25 West 43rd Street, 4th Floor, New York, NY 10036, USA (http://www.ansi.org/).

Copyright © 2006 IEEE. All rights reserved.

Copyright The Institute of Electrical and Electronics Engineers, Inc.
Provided by IHS under license with IEEE
No reproduction or networking permitted without license from IHS Not for Resale

ANSI/ASME B1.1-1989, Unified Inch Screw Threads (UN and UNR Thread Form).[2]

IEEE Std C57.12.00™-1993, IEEE Standard General Requirements for Liquid-Immersed Distribution, Power, and Regulating Transformers.[3, 4]

IEEE Std C57.12.80™-1978 (Reaff 1992), IEEE Standard Terminology for Power and Distribution Transformers.

IEEE Std C57.12.90™-1999, IEEE Standard Test Code for Liquid-Immersed Distribution, Power and Regulating Transformers.

IEEE Std C57.91™-1995, IEEE Guide for Loading Mineral-Oil-Immersed Transformers.

IEEE Std 386™, IEEE Standard for Separable Insulated Connector Systems for Power Distribution Systems Above 600 V.

3. Transformer performance requirements

3.1 Kilovolt-ampere ratings

Kilovolt-ampere ratings shall be as specified in Table 1.

Table 1—Kilovolt-ampere ratings

55 °C	65 °C
300	336
500	560
750	840
1000	1120
1500	1680
2000	2240
2500	2800

The base rating as listed in Table 1 shall not exceed a 55 °C average winding temperature rise above standard ambient. The 65 °C rating is based on not exceeding a 65 °C average winding temperature rise or an 80 °C hot-spot temperature rise, as specified in IEEE Std C57.12.00-1993. The temperature rise of the insulating liquid shall not exceed 65 °C measured near the top of the tank.

The dual-rated transformers as shown in Table 1 are based on utilizing an insulation system that allows continuous operation at a 65 °C rise and 112% of the 55 °C base rating. Dual-rated transformers shall also be capable of delivering the 55 °C base kilovolt-ampere rating when operated in a 40 °C average ambient temperature with a maximum temperature not to exceed 50 °C and without exceeding an 80 °C hotspot temperature rise.

When required, a kilovolt-ampere base rating with a 65 °C average winding temperature rise can be specified.

[2] ASME publications are available from the American Society of Mechanical Engineers, 3 Park Avenue, New York, NY 10016-5990, USA (http://www.asme.org/).
[3] The IEEE standards or products referred to in this clause are trademarks of the Institute of Electrical and Electronics Engineers, Inc.
[4] IEEE publications are available from the Institute of Electrical and Electronics Engineers, 445 Hoes Lane, Piscataway, NJ 08854, USA (http://standards.ieee.org/).

Copyright © 2006 IEEE. All rights reserved.
Copyright The Institute of Electrical and Electronics Engineers, Inc.
Provided by IHS under license with IEEE
No reproduction or networking permitted without license from IHS
Not for Resale

3.2 Voltage rating and tap ratings

Preferred voltage ratings and taps shall be in accordance with Table 2. All taps shall be at rated kilovolt-amperes.

Table 2—Preferred ratings for subway-type and vault-type secondary network transformers

Preferred nominal system voltage	BIL [a] kV	Rating [b]	Transformer high-voltage taps		Kilovolt-ampere ratings for low-voltage ratings of	
			Above	Below	216Y/125 [c]	480Y/277 [c]
2400/4160Y	60	4160	None	None	300–1000	500–1000
		4160Y/2400	None	None	300–1000	500–1000
12 000	95	12 000	None	11 700/11 400/11 100/10 800	300–1000	500–2500
			12 600/ 12 300	11 700/11 400	—	500–2500
13 200 or	95	13 200	None	12 870/12 540/12 210/11 880	300–1000	—
7620/13 200Y			13 860/13 530	12 870/12 540	—	500–2500
	95	13200Y/7620	None	12 870/12 540/12 210/11 880	300–1000	—
			13 860/13 530	12 870/12 540	—	500–2500
14 400	95	14 400	None	14 040/13 680/13 320/12 960	300–1000	—
			15 120/14 760	14 040/13 680	—	500–2500
23 000	150	22 900	24 100/23 500	22 300/21 700	500–1000	500–2500
34 500	200	27 060	29 090/28 414/27 737	26 383	500–1000	500–2500
34 500	200	34 400	36 200/35 300	33 500/32 600	500–1000	500–2500

[a] BIL = basic lightning impulse insulation level
[b] All windings are delta-connected unless otherwise indicated.
[c] Kilovolt-ampere ratings separated by an en-dash (–) include all ratings within that range.

3.3 Angular displacement

The angular displacement between the primary and secondary terminal voltages of three-phase transformers with wye-wye connections shall be 0°. The angular displacement between the primary and secondary terminal voltages of three-phase transformers with delta-wye connections shall be 30° with the primary leading the low voltage.

3.4 Basic lightning impulse insulation levels (BILs)

BILs shall be as specified in Table 2, and the dielectric test levels shall be in accordance with distribution transformer levels in IEEE Std C57.12.00-1993.[5]

NOTE—Cable terminations supplied by the user should provide suitable coordination with the transformer insulation level.[6]

3.5 Percent impedance

The percent impedance on the rated voltage connection shall be as specified in Table 3.

Table 3—Impedance

Kilovolt-ampere rating	Percentage impedance
300–1000	5.0
1500–2500	7.0

[5] Information on references can be found in Clause 2.
[6] Notes in text, tables, and figures are given for information only and do not contain requirements needed to implement this standard.

Copyright © 2006 IEEE. All rights reserved.

Copyright The Institute of Electrical and Electronics Engineers, Inc.
Provided by IHS under license with IEEE
No reproduction or networking permitted without license from IHS
Not for Resale

The tolerance shall be as specified in IEEE Std C57.12.00-1993.

3.5.1 Tolerance on impedance on a tap

The percent departure of the actual impedance on any tap from the actual impedance at the rated voltage shall not be greater than the total tap voltage range expressed as a percentage of the rated voltage.

3.6 Audible sound levels

Transformers shall be designed so that the average sound level does not exceed the values given in Table 4 measured according to IEEE Std C57.12.90-1999.

Table 4—Audible sound levels

Kilovolt-ampere rating 200 kV BIL and below	**Average sound level dB(A)**
300	55
500	56
750	57
1000	58
1500	60
2000	61
2500	62

4. Tests

All tests shall be performed in accordance with IEEE Std C57.12.00-1993 and IEEE Std C57.12.90-1999.

5. Primary disconnect and grounding switch

5.1 General

The primary disconnect and grounding switch shall be a three-pole, three-position switch for disconnecting the primary feeder from the transformer and for connecting the incoming feeder to the ground position. The switch shall be housed in an enclosure welded to the end of the transformer tank. The switch enclosure shall consist of a switch chamber (Item 23 in Figure 2) and a primary termination chamber (Item 17 in Figure 2 and detailed in Figure 1). (Figure 1 through Figure 4 can be found at the end of the main part of this standard—before Annex A.

5.2 Primary switch electrical performance requirements

5.2.1 Continuous rating

The 60 Hz rating of the switch shall be 200 A.

Copyright © 2006 IEEE. All rights reserved.

Copyright The Institute of Electrical and Electronics Engineers, Inc.
Provided by IHS under license with IEEE
No reproduction or networking permitted without license from IHS
Not for Resale

5.2.2 Short-circuit rating

In the ground position, the switch shall be capable of withstanding a short-circuit root-mean-square (rms) symmetrical current of 15 000 A for 5 s without impairing the continuous rating or operation of the switch. In the closed position, it shall carry the full short-circuit duty of the transformer winding.

5.2.3 Interrupting rating

The disconnecting and grounding switch have one of the two interrupting ratings described in 5.2.3.1 and 5.2.3.2.

5.2.3.1 No interrupting rating (dead break)

This requires that the transformer be totally deenergized before the switch mechanism can be operated.

5.2.3.2 Magnetizing current interrupting rating (mag-break)

This switch shall be designed to open the primary when only magnetizing current is present. The switch will not operate while a load is present on the secondary. The switch shall have operational protection as specified in 5.2.6.1 or 5.2.6.2. The magnetizing current interrupting mechanism shall be designed so that, regardless of the speed at which the switch handle is moved from the closed position to the open position, no damage will occur to the main contacts of the switch.

5.2.4 Dielectric requirements in closed position

The switch shall, as a minimum, be designed to meet the same dielectric values of the transformer to which it is connected. The switch shall be connected to the transformer while dielectric tests are being performed on the transformer.

5.2.5 Dielectric requirements in open position

The dielectric strength of the switch in the open position shall permit dc 5 min cable tests in the field as shown in Table 5.

Table 5—Cable test requirements

Switch (kV)	Cable test (kV)
15	45
24	65
34.5	85

5.2.6 Electrical interlock

5.2.6.1 Interlock protection when no interrupting rating is required

An electrical interlock shall prevent movement of the switch from any position when the transformer is energized.

5.2.6.2 Interlock protection when magnetizing current interruption is required

An electrical interlock shall be provided to prevent movement of the switch operating mechanism while the network protector is in the closed position. This interlock will permit the switch to operate from the closed

Copyright © 2006 IEEE. All rights reserved.
--`,,```,,,,````-`-`,,`,,`,`,,`---

Copyright The Institute of Electrical and Electronics Engineers, Inc.
Provided by IHS under license with IEEE
No reproduction or networking permitted without license from IHS
Not for Resale

position to the open position with the primary feeder energized and the network protector in the open position. This interlock shall lock when deenergized.

A second electrical interlock shall be provided to prevent switch movement into the ground position while the transformer is energized.

5.2.6.3 Interlock testing

The electrical interlock coil shall be tested with, and shall withstand, the same 60 Hz, 1 min dielectric test as the secondary winding.

5.2.6.4 Operating values

The interlock shall pick up and drop out at the voltages shown in Table 6.

Table 6—Interlock coil requirements

Coil voltage	Maximum pickup voltage	Minimum dropout voltage	Maximum excitation voltage
125	90	15	140
277	200	33	310

5.2.6.5 Interlock assembly

The interlock assembly shall be such that, with the locking lug or latch mechanism blocked and the coil energized at the voltage indicated, the functional performance of the coil will not be impaired.

5.3 Primary switch mechanical features

5.3.1 Primary switch and cable terminal chamber covers

Bolted and gasketed covers shall be provided for both switch and terminal chambers. The covers shall be equipped with handles and guide pins. Where cemented gaskets are used, means for breaking the seal shall be provided. Liquid or compound for the terminal chamber is not supplied.

5.3.1.1 Vent and level plug

A 0.25 in national pipe thread (NPT) opening with a pipe plug shall be provided in the terminal chamber cover at the 25 °C liquid or compound level.

5.3.2 Primary switch operating positions and sequence

The three operating positions, as well as the sequence of operation, shall be open, closed, and ground. The switch shall be designed so that when it is moved from open to ground or from ground to open, a pause is enforced in the closed position to allow time for the electrical interlock to engage if the transformer is energized.

These positions shall be indicated by suitable makings located near the external operating handle and visible from the primary end of the transformer.

--`,,```,,,,````-`-`,,`,,`,`,,`---
Copyright © 2006 IEEE. All rights reserved.

Copyright The Institute of Electrical and Electronics Engineers, Inc.
Provided by IHS under license with IEEE
No reproduction or networking permitted without license from IHS
Not for Resale

5.3.3 Operating handle

The switch-operating handle shall be provided with a latch to prevent accidental movement of the switch. Means shall be provided for padlocking the switch in each position.

5.4 Primary switch accessory equipment

The accessory equipment for the primary switch shall be provided and located approximately as shown in Figure 2.

5.4.1 Filling provisions

Both the switch chamber and the terminal chamber shall be provided with 1 in NPT female openings provided with pipe plugs.

5.4.2 Air test provision

The air test provision shall be provided for the switch chamber and shall consist of 0.5 in NPT opening equipped with a 0.5 in NPT pipe plug and shall be located above the 85 °C liquid level.

5.4.3 Liquid-level indicator

A submersible, weld-on, nongasketed type of magnetic liquid-level indicator with a dial (inside bezel) face diameter approximately 75 mm (3 in) shall be provided on the switch chamber. The gauge shall have a dark dial face with light markings and a light indicating hand. The dial markings shall show the 25 °C level and the minimum and maximum levels. The words “Liquid Level” shall be on the dial or on a suitable nameplate mounted adjacent to the indicator.

5.4.4 Drain provisions

5.4.4.1 Primary switch chamber

A globe-type drain valve with 1 in NPT threads shall be provided. The drain valve shall have a pipe plug in the outer end of the valve. A nonconducting thread sealer is required.

5.4.4.2 Terminal chamber

A 1 in NPT female opening with pipe plug shall be provided.

5.5 Primary cable entrance

The primary cable entrance shall be by means of one of the methods described in 5.5.1 through 5.5.3.

5.5.1 Wiping sleeves

Entrance shall be by means of either three single-conductor or one three-conductor straight, tinned, tapered wiping sleeve or sleeves of brass, bronze, or copper that are brazed, welded, or bolted to the terminal chamber. Three single conductor sleeves or one three-conductor sleeve shall be provided as specified. Further details are found in Figure 1.

Copyright © 2006 IEEE. All rights reserved.

Copyright The Institute of Electrical and Electronics Engineers, Inc.
Provided by IHS under license with IEEE
No reproduction or networking permitted without license from IHS
Not for Resale

5.5.2 Entrance fittings

Entrance shall be by means of either three single-conductor or one three-conductor bolted-on entrance fitting. Three single-conductor or one three-conductor fitting shall be provided as specified. Further details are found in Figure 1.

5.5.3 Bushings and bushing wells

Entrance shall be by means of bushings or bushing wells for connection to the distribution system through adapters, separable insulated connectors, or both.

6. Construction

6.1 General

The transformer enclosure shall consist of a tank, radiators, a primary switch, a secondary network protector throat, bushing termination, and accessories as specified in this standard. The primary switch is welded to one end of the transformer tank. The network protector throat is welded to the other end.

6.2 Corrosion resistance

6.2.1 Transformer enclosure

The transformer enclosure shall be constructed of materials that provide corrosion resistance equivalent to not less than the thickness of copper-bearing steel shown in Table 7 (minimum copper content: 0.20%).

Table 7—Minimum material thickness

Transformer enclosure	Subway type mm (in)	Vault type mm (in)
Tank wall	8 (0.31)	8 (0.31)
Switch housing	8 (0.31)	8 (0.31)
Auxiliary coolers	8 (0.31)	2.5 (0.09)
Cover	13 (0.5)	13 (0.5)
Tank bottom	13 (0.5)	13 (0.5)

6.2.2 Hardware

All external hardware, nuts, bolts, washers, etc., shall be austenitic stainless steel, silicon bronze, or the function equivalent.

6.2.3 Other materials

All valves, fittings, pipe plugs or caps, bushings, and cable entrances shall also have corrosion resistance properties, as stated in 6.2.2. Any thread sealant used shall be nonconducting.

6.2.4 Finish

The finish shall be a dark color and conform to ANSI C57.12.32-1994.

Copyright © 2006 IEEE. All rights reserved.

Copyright The Institute of Electrical and Electronics Engineers, Inc.
Provided by IHS under license with IEEE
No reproduction or networking permitted without license from IHS
Not for Resale

6.3 Tank

6.3.1 General

The transformer tank shall be of sealed construction, consisting of a welded main cover equipped with a handhole cover and a subbase. The completely assembled tank shall be of sufficient strength to withstand a pressure of 50 kPa (7 psig) without permanent deformation and 105 kPa (15 psig) without rupture. The completely assembled transformer shall be tested for leaks at a minimum pressure of 50 kPa (7 psig) above the static head of liquid for not less than 6 h. Alternative methods for leak detection, such as the helium leak detector method, may also be used.

6.3.2 Transformer with subbase

The transformer subbase shall consist of bars parallel to the long axis of the transformer. The subbase shall provide a 38 mm (1.5 in) minimum clearance from the floor to the tank bottom, with corners left clear for jacking.

6.3.3 Secondary throat

Secondary throat (Item 10 in Figure 2) shall be suitable for connecting to a network protector. A gasket shall be provided for use between the throat and the protector. Bushings spacing, throat dimensions, terminal details, and application shall be as specified in Table 8.

Table 8—Secondary throat details

Secondary voltage and kilovolt-ampere ratings		
216Y/125	**480Y/277**	**Figure**
300, 500	500, 750, 1000	Figure 3
750, 1000	1500, 2000, 2500	Figure 4

6.3.4 Handhole cover

A handhole with a welded cover shall be provided for disconnecting the neutral or neutrals for test and for mounting a pressure-relief device when present. A welded cover shall be furnished.

6.3.5 Lifting lugs

Four lifting lugs shall be arranged to facilitate lifting the transformer with or without the network protector attached. The lugs shall be provided with a suitable hole for attaching a 40 mm (1.5 in) clevis.

6.3.6 Lifting and jacking provisions

Lifting and jacking provisions shall be designed to provide a safety factor of 5. This safety factor is the ratio of the ultimate stress of the material used to the working stress. The working stress is the maximum combined stress developed in the lifting provisions by the static load of the completely assembled transformer.

6.3.7 Secondary throat shipping guard

A sealed sheet steel cover pan, fully flat gasketed, shall be installed over the secondary throat to prevent mechanical and corrosive damage to the secondary bushings, external connectors, and throat flange during shipment and storage outdoors. The throat cover shall be bolted securely to the flange of the secondary

Copyright © 2006 IEEE. All rights reserved.

Copyright The Institute of Electrical and Electronics Engineers, Inc.
Provided by IHS under license with IEEE
No reproduction or networking permitted without license from IHS
Not for Resale

throat. The cover shall be completely enclosed to prevent entrance of airborne chemicals or moisture that may corrode these external parts. The cover shall be painted.

6.4 Accessory equipment for transformer tanks

Accessory equipment shall be provided as part of the transformer. The approximate location of such equipment is shown in Figure 2.

6.4.1 Tap changer

A tap changer for deenergized operation shall be provided. Each tap changer position and the associated tap voltage shall be clearly identifiable by reference to nameplate information. All positions of the tap changer shall be operative positions. The tap changer shall be of sealed construction so that the integrity of the main tank seal is not compromised at any time. The tap changer shall be designed with an external operating means available under a protective cap on top of the main tank. An indicator shall clearly show the tap position when the cap is removed.

6.4.2 Air test provision

The air test provisions shall consist of 0.5 in NPT opening equipped with 0.5 in NPT pipe plug and shall be located above the 85 °C liquid level.

6.4.3 Welded-on nongasketed-type magnetic liquid-level indicator

Refer to 5.4.3 for the requirements for the liquid-level indicator.

6.4.4 Dial-type thermometer without alarm contacts

The diameter of the dial (inside bezel) shall be approximately 115 mm (4.5 in). The thermometer shall be the direct-stem type, mounted in a closed well at a suitable level to indicate the top liquid temperature. The thermometer shall have a dark dial face with light markings, a light-colored indicating hand, and an orange-red maximum indicating hand, with provision for resetting. The dial markings shall cover the range from 0 °C to 120 °C. The words “Liquid Temperature” shall be on the dial or on a suitable nameplate mounted adjacent to the indicator.

6.4.5 Combination drain and bottom filter valve

Refer to 5.4.4.1 for the drain valve requirements.

6.4.6 Filling plug and upper filter press connection

The filling plug and upper filter press connection shall be located in the cover and shall consist of a 1 in NPT female opening with plug.

6.4.7 Ground pads

Tank-grounding provisions shall consist of a copper-faced steel or stainless steel pad with two holes horizontally spaced on 44.5 mm (1.75 in) centers and drilled and tapped for 0.5-in 13 unified national coarse (UNC) thread. The ground pad shall be welded to the tank. The minimum thickness of the copper facing shall be 0.4 mm (0.015 in). The minimum threaded depth of the holes shall be 13 mm (0.5 in). Thread protection for the ground pad shall be provided.

Copyright © 2006 IEEE. All rights reserved.

Copyright The Institute of Electrical and Electronics Engineers, Inc.
Provided by IHS under license with IEEE
No reproduction or networking permitted without license from IHS
Not for Resale

6.5 Dimensions

Dimensions, including the secondary flexible connectors (without the network protector attached), shall not exceed those shown in Table 9. These dimensions are intended to guide the user in planning vaults capable of accommodating all current designs of network transformers covered by this standard.

Table 9—Maximum tank dimensions
In millimeters [a]

For mineral oil-filled units												
	15 kV class below				25 kV class				35 kV class			
Kilovolt-ampere rating	W	L [b]	H_c [c]	Throat H [d]	W	L [b]	H_c [c]	Throat H [d]	W	L [b]	H_c [c]	Throat H [d]
300	991	1981	1702	1067	—	—	—	—	—	—	—	—
500	1118	1981	1778	1219	1168	2210	1778	1397	1245	2388	1956	1473
750	1194	2134	1880	1397	1219	2362	1880	1549	1295	2540	2032	1727
1000	1321	2184	2134	1448	1397	2464	1981	1524	1473	2667	2286	1854
1500	1422	2438	2184	1575	1524	2540	2184	1651	1600	2769	2362	1956
2000	1626	2667	2464	1778	1778	2921	2261	1778	1956	2972	2667	2134
2500	1778	2667	2565	1905	1905	3277	2413	1905	2134	3327	2921	2286
For silicone-filled units												
300	1067	2032	1778	1067	—	—	—	—	—	—	—	—
500	1219	2083	1829	1219	1245	2210	1778	1397	1321	2388	1905	1473
750	1270	2184	2032	1397	1295	2362	1905	1549	1372	2540	2159	1727
1000	1372	2235	2134	1448	1397	2464	2159	1524	1473	2667	2286	1854
1500	1422	2438	2159	1575	1575	2565	2159	1651	1651	2769	2362	1956
2000	1626	2667	2464	1778	1778	2921	2489	1778	1956	3048	2616	2134
2500	1778	3048	2565	1905	1956	3277	2667	1905	2134	3327	2870	2286

In inches [a]

For mineral oil-filled units												
	15 kV class and below				25 kV class				35 kV class			
Kilovolt-ampere rating	W	L [b]	H_c [c]	Throat H [d]	W	L [b]	H_c [c]	Throat H [d]	W	L [b]	H_c [c]	Throat H [d]
300	39	78	67	42	—	—	—	—	—	—	—	—
500	44	78	70	48	46	87	70	55	49	94	77	58
750	47	84	74	55	48	93	74	61	51	100	80	68
1000	52	86	84	57	55	97	78	60	58	105	90	73
1500	56	96	86	62	60	100	86	65	63	109	93	77
2000	64	105	97	70	70	115	89	70	77	117	105	84
2500	70	105	101	75	75	129	95	75	84	131	115	90
For silicone-filled units												
300	42	80	70	42	—	—	—	—	—	—	—	—
500	48	82	72	48	49	87	70	55	52	94	75	58
750	50	86	80	55	51	93	75	61	54	100	85	68
1000	54	88	84	57	55	97	85	60	58	105	90	73
1500	56	96	85	62	62	101	85	65	65	109	93	77
2000	64	105	97	70	70	115	98	70	77	120	103	84
2500	70	120	101	75	77	129	105	75	84	131	113	90

[a] Transformers with other insulating liquids may require different dimensions.
[b] "L" includes the flexible secondary bushing adapter (excludes the network protector).
[c] "H_c" is the height from floor to cover.
[d] "Throat H" is the maximum height from floor to centerline of throat.

Copyright © 2006 IEEE. All rights reserved.

Copyright The Institute of Electrical and Electronics Engineers, Inc.
Provided by IHS under license with IEEE
No reproduction or networking permitted without license from IHS
Not for Resale

7. Bushings

7.1 Primary bushings

7.1.1 Primary bushings between main tank and switch chamber

The primary bushings between the main tank and the switch chamber shall be sealed to prevent the interchange of liquids between compartments. The insulators of the bushings shall be replaceable from the switch chamber.

7.1.2 Primary bushings between switch chamber and terminal chamber

The primary bushings between the switch chamber and the terminal chamber shall be sealed to prevent the interchange of liquids or compounds between compartments. They shall be the stud type, and the interior distance from the top of the stud to the top of the terminal chamber shall be as specified in Figure 1.

7.1.3 Primary entrance

The primary entrance to the terminal chamber when bushings or bushing wells are required for connection to the distribution system shall be by means of adapters or separable insulated connectors, or both. Reference IEEE Std 386.

7.2 Secondary bushings

The secondary bushings shall be located inside the secondary throat and shall be brazed or welded to the tank. Bushings shall be located as indicated in Figure 2. The bushings shall be externally replaceable.

7.3 Terminal markings

External primary and secondary terminal markings shall be in accordance with Figure 2.

8. Neutral termination

8.1 Primary neutral

Transformers having wye-connected primary windings shall have the primary neutral internally connected to the secondary neutral by means of a removable link.

8.2 Secondary neutral

A fully rated secondary neutral shall be a blade welded to the tank opposite the internal boss or, when specified by the user, a fully insulated bushing. The neutral termination shall comply with the requirements in Table 10.

If a bushing is used, removable ground straps, sized for the short-circuit rating of the transformer, shall be provided and connected between the neutral bushing and a ground pad. The ground pad shall have two tapped holes, each 0.5-in 13-UNC, welded to the tank wall and located a minimum of 300 mm (12 in) from the bushing center.

Copyright © 2006 IEEE. All rights reserved.

Copyright The Institute of Electrical and Electronics Engineers, Inc.
Provided by IHS under license with IEEE
No reproduction or networking permitted without license from IHS
Not for Resale

Table 10—Secondary neutral

Secondary rating (kVA)		
216Y/125	**480Y/277**	**Number of holes**
300, 500	500, 750, 1000, 1500	4
750, 1000	2000, 2500	6

9. Nameplate

The nameplate shall be mounted on the primary terminal chamber cover, as shown in Figure 2. The nameplate shall conform to the requirements of the nameplate "C" as described in IEEE Std C57.12.00-1993 and shall be modified to include the following:

a) Type (subway or vault)
b) The words "Network Transformer"
c) Approximate volume of liquid in switch
d) Approximate volume of liquid in transformer
e) Interlock coils and connections
f) Type of primary switch

10. Connections of transformer for shipment by manufacturer

The transformer shall be shipped connected for the rated high voltage.

Copyright © 2006 IEEE. All rights reserved.

Copyright The Institute of Electrical and Electronics Engineers, Inc.
Provided by IHS under license with IEEE
No reproduction or networking permitted without license from IHS
Not for Resale

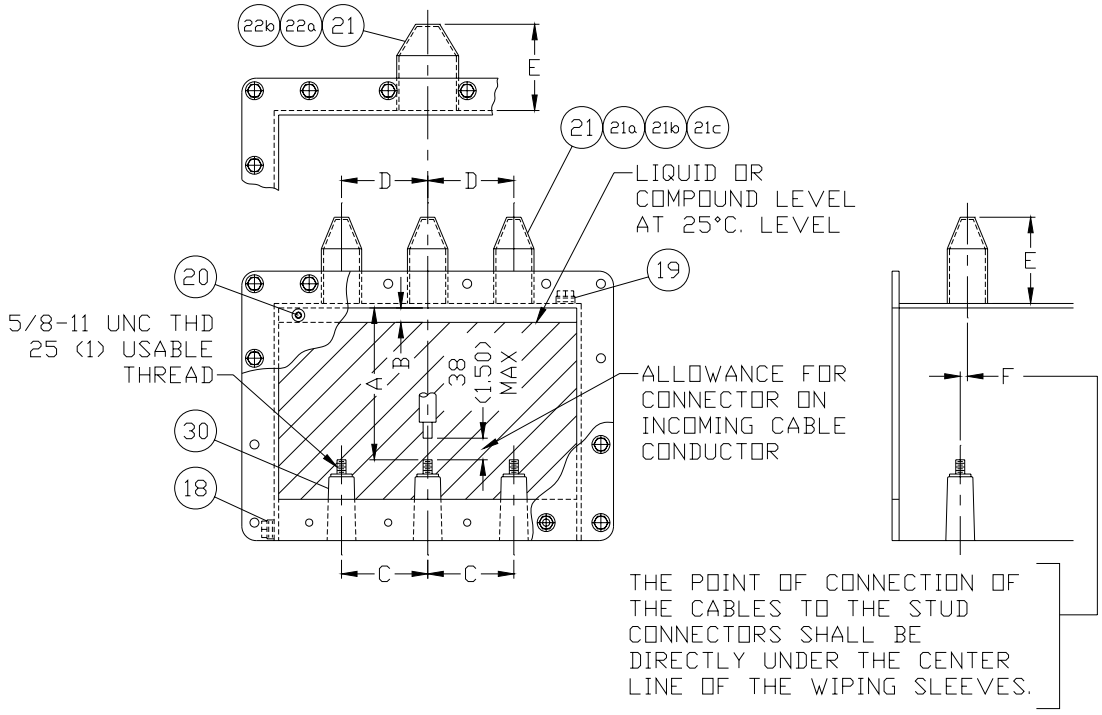

High voltage	Dimensions				
BIL (kV)	A (minimum) mm (in)	B (maximum) mm (in)	C (minimum) mm (in)	E (minimum) mm (in)	F
95 and below	267 (10.5)	13 (0.5)	114 (4.5)	152 (6.0)	± 13 (0.50)
150	368 (14.5)	25 (1.0)	152 (6.0)	152 (6.0)	± 13 (0.50)
200	470 (18.5)	25 (1.0)	165 (6.5)	152 (6.0)	± 13 (0.50)

Item number	Subclause reference	Description
18	5.4.4.2	Drain plug
19	5.4.1	Filling plug
20	5.3.1.1	Vent and level plug
21	5.5	Primary cable entrance
21a	5.5.1	Three single-conductor wiping sleeves (brazed or welded on)
21b	5.5.2	Three single-conductor entrance fittings (bolted on)
21c	5.5.3	Separable insulated connectors (plug-in bushings or wells)
22a	5.5.1	One three-conductor wiping sleeve (brazed or welded on)
22b	5.5.2	One three-conductor entrance fitting (bolted on)
30	7.1	Primary bushings

NOTE 1—Dimension “C” = “D” when wiping sleeves are used and may vary by ±13 mm (0.50 in) when wiping sleeves are not used.
NOTE 2—Allowance for connectors on incoming cable = 38 mm (1.50 in).

(a)
Chamber

Figure 1—Primary terminal chamber details

Copyright © 2006 IEEE. All rights reserved.

Copyright The Institute of Electrical and Electronics Engineers, Inc.
Provided by IHS under license with IEEE
No reproduction or networking permitted without license from IHS
Not for Resale

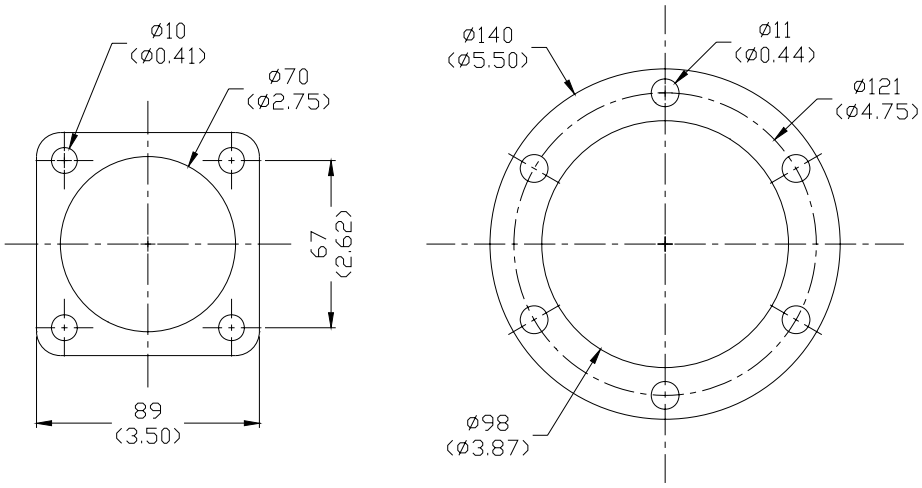

(b)
BASE SIZE 3

(c)
BASE SIZE 4

TYPICAL DIMENSIONS

Wiping sleeve dimensions (brazed or welded on)

	Inside diameter (minimum) mm (in)	Taper to (maximum) mm (in)	Length of taper (minimum) mm (in)
Three single-conductor wiping sleeves (Item 21a)	44 (1.75)	29 (1.13)	38 (1.5)
One three-conductor wiping sleeve (Item 22a)	89 (3.5)	38 (1.5)	57 (2.25)

Entrance fitting (bolted on)

Three single-conductor entrance fittings (Item 21b)	Maximum base size 3 (Figure 1b)
One three-conductor entrance fitting (Item 22b)	Maximum base size 4 (Figure 1c)

Figure 1 – continued

Copyright © 2006 IEEE. All rights reserved.
Copyright The Institute of Electrical and Electronics Engineers, Inc.
Provided by IHS under license with IEEE
No reproduction or networking permitted without license from IHS
Not for Resale

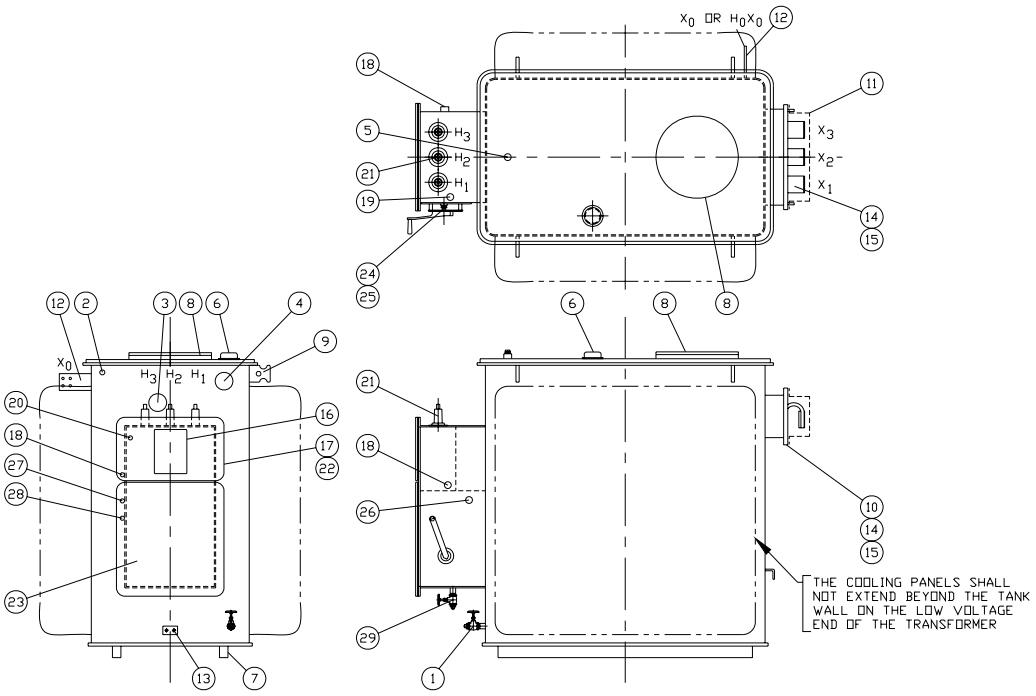

Compartment	Item number	Subclause reference	Description
Transformer tank	1	6.4.5	Combination drain and bottom filler valve
	2	6.4.2	Provision for air test
	3	6.4.3	Welded-on nongasketed type magnetic liquid-level indicator
	4	6.4.4	Dial-type thermometer without alarm contacts
	5	6.4.6	Filling plug and upper filter press connection
	6	6.4.1	Tap changer
	7	6.3.2	Transformer subbase
	8	6.3.4	Handhole
	9	6.3.5	Lifting lugs
	10	6.3.3	Throat
	11	6.3.7	Shipping guard
	12	8.2	Secondary neutral grounded to tank
	13	6.4.7	External grounding provision
	14	Figure 3	Secondary throat for mounting network protector
	15	Figure 4	Secondary throat for mounting network protector
	16	Clause 9	Nameplate location
	17	5.4.4.2	Primary terminal chamber
Primary	18	5.4.4.2	Drain plug
Terminal chamber	19	5.4.1	Filling plug
	20	5.3.1.1	Vent and level plug
	21	5.5	Primary cable entrance
	22	Figure 1	Primary terminal chamber details
	23	5.4.4.1	Primary switch chamber
	24	5.2	Electrical performance requirements
Primary	25	5.3.3	Operating handle
Switch chamber	26	5.4.1	Filling plug
	27	5.4.2	Provision for air test
	28	5.4.3	Welded-on nongasketed type magnetic liquid-level indicator
	29	5.4.4.1	Drain valve

Figure 2—Location of accessories (three-position disconnecting and grounding switch)

Copyright © 2006 IEEE. All rights reserved.

Copyright The Institute of Electrical and Electronics Engineers, Inc.
Provided by IHS under license with IEEE
No reproduction or networking permitted without license from IHS
Not for Resale

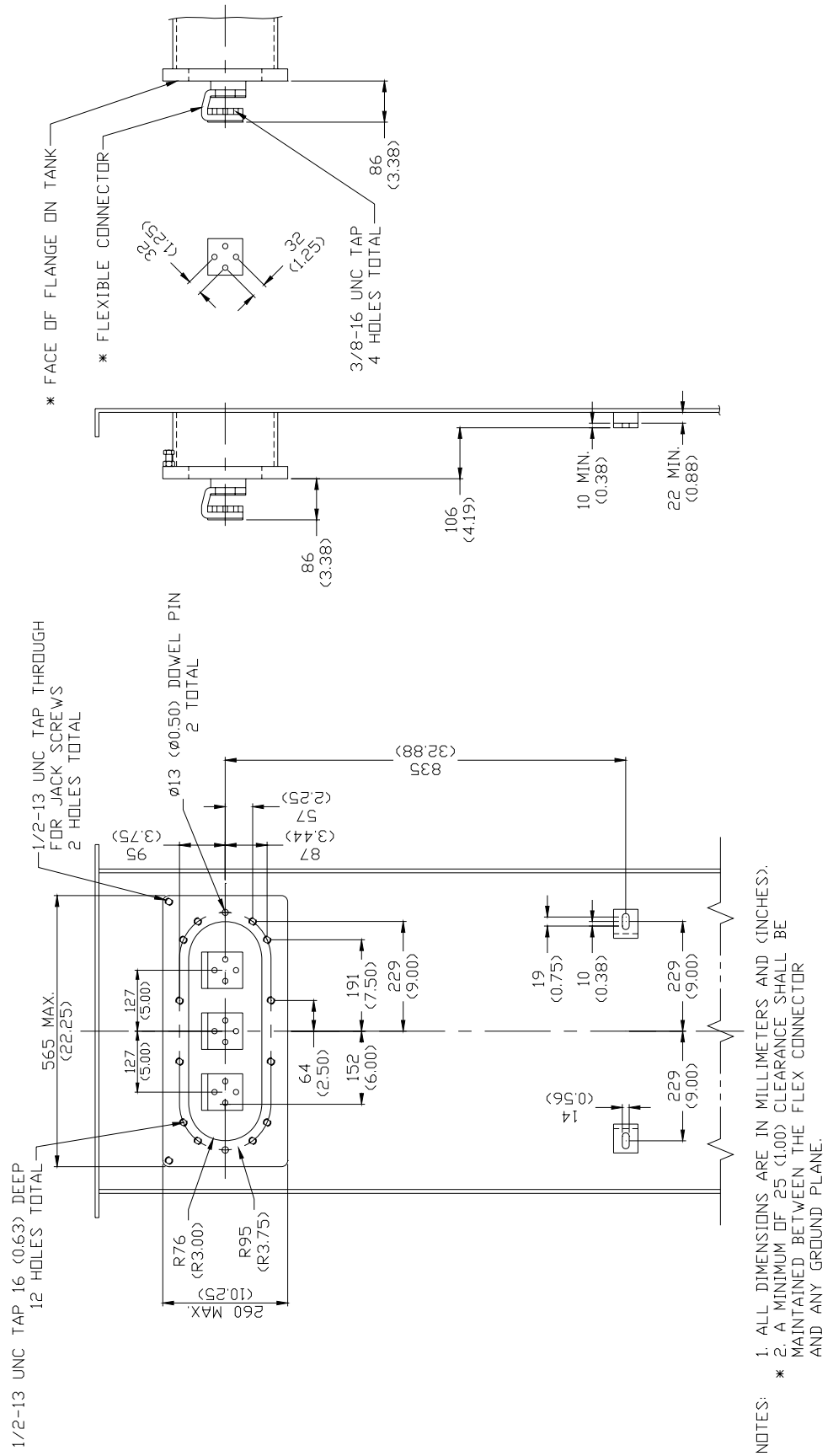

Figure 3—Transformer throat for mounting network protector
Low voltage 216Y/125 V, 300-500 kVA; Low voltage 480Y/277 V, 500–1000 kVA

Copyright © 2006 IEEE. All rights reserved.

Copyright The Institute of Electrical and Electronics Engineers, Inc.
Provided by IHS under license with IEEE
No reproduction or networking permitted without license from IHS
Not for Resale

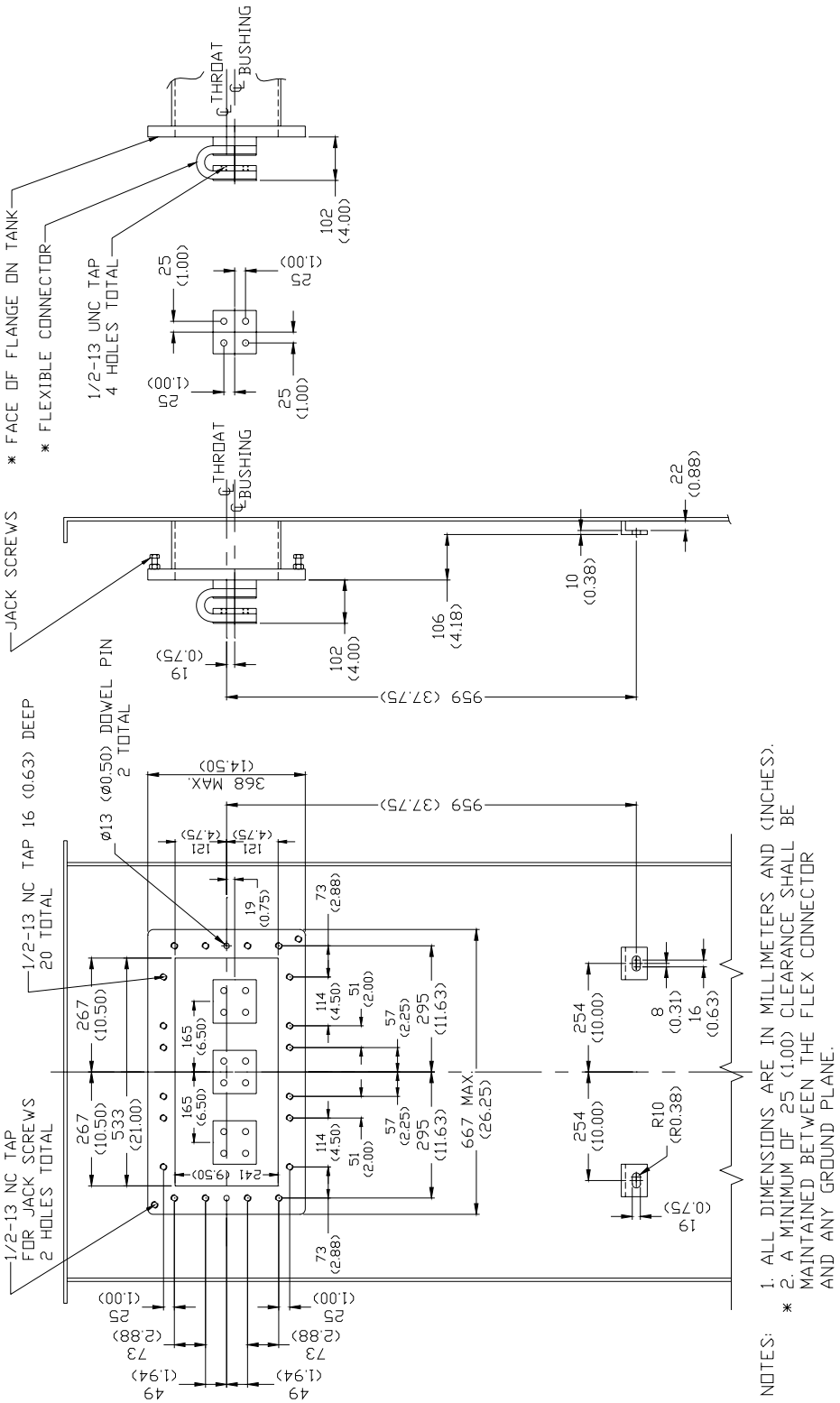

Figure 4—Transformer throat mounting for network protector
Low voltage 216Y/125 V, 750–1000 kVA; Low voltage 480Y/277 V, 1500–2500 kVA

Copyright © 2006 IEEE. All rights reserved.

Copyright The Institute of Electrical and Electronics Engineers, Inc.
Provided by IHS under license with IEEE
No reproduction or networking permitted without license from IHS

Not for Resale

Annex A

(informative)

Bibliography

[B1] ANSI C57.12.70-1978 (R1993), Terminal Markings and Connections for Distribution and Power Transformers.[7]

[B2] ANSI/ASME B1.20.1-1983 (R1992), Pipe Threads, General Purpose (Inch).[8]

[B3] IEEE 100, *The Authoritative Dictionary of IEEE Standards Terms,* Seventh Edition.[9]

[7] ANSI publications are available from the Sales Department, American National Standards Institute, 25 West 43rd Street, 4th Floor, New York, NY 10036, USA (http://www.ansi.org/).
[8] ASME publications are available from the American Society of Mechanical Engineers, 3 Park Avenue, New York, NY 10016-5990, USA (http://www.asme.org/).
[9] IEEE publications are available from the Institute of Electrical and Electronics Engineers, 445 Hoes Lane, Piscataway, NJ 08854, USA (http://standards.ieee.org/).

Copyright © 2006 IEEE. All rights reserved.

Copyright The Institute of Electrical and Electronics Engineers, Inc.
Provided by IHS under license with IEEE
No reproduction or networking permitted without license from IHS
Not for Resale