IEEE Std C37.99™-2000 (R2006)
(Revision of IEEE Std C37.99-1990)

IEEE Guide for the Protection of Shunt Capacitor Banks

Sponsor
Power System Relaying Committee
of the
IEEE Power Engineering Society

Approved 30 January 2000
Reaffirmed 14 September 2006

IEEE-SA Standards Board

Abstract: The protection of shunt power capacitor and filter banks are covered. Guidelines for reliable applications of protection methods intended for use in many shunt capacitor applications and designs are included. The protection of pole-mounted capacitor banks on distribution circuits and the application of capacitors connected directly to routing apparatus are not included.
Keywords: capacitor, fuseless, power capacitor, protection, relaying, shunt, unbalance protection

---

The Institute of Electrical and Electronics Engineers, Inc.

3 Park Avenue, New York, NY 10016-5997, USA

Copyright © 2000 by the Institute of Electrical and Electronics Engineers, Inc.

All rights reserved. Published 2 June 2000. Printed in the United States of America.

Print: ISBN 0-7381-1978-4 SH94831

PDF: ISBN 0-7381-1979-2 SS94831

No part of this publication may be reproduced in any form, in an electronic retrieval system or otherwise, without the prior written permission of the publisher.

--`,,```,,,,````-`-`,,`,,`,`,,`---

Copyright The Institute of Electrical and Electronics Engineers, Inc.
Provided by IHS under license with IEEE
No reproduction or networking permitted without license from IHS Not for Resale

IEEE Standards documents are developed within the IEEE Societies and the Standards Coordinating Committees of the IEEE Standards Association (IEEE-SA) Standards Board. Members of the committees serve voluntarily and without compensation. They are not necessarily members of the Institute. The standards developed within IEEE represent a consensus of the broad expertise on the subject within the Institute as well as those activities outside of IEEE that have expressed an interest in participating in the development of the standard.

Use of an IEEE Standard is wholly voluntary. The existence of an IEEE Standard does not imply that there are no other ways to produce, test, measure, purchase, market, or provide other goods and services related to the scope of the IEEE Standard. Furthermore, the viewpoint expressed at the time a standard is approved and issued is subject to change brought about through developments in the state of the art and comments received from users of the standard. Every IEEE Standard is subjected to review at least every five years for revision or reaffirmation. When a document is more than five years old and has not been reaffirmed, it is reasonable to conclude that its contents, although still of some value, do not wholly reflect the present state of the art. Users are cautioned to check to determine that they have the latest edition of any IEEE Standard.

Comments for revision of IEEE Standards are welcome from any interested party, regardless of membership affiliation with IEEE. Suggestions for changes in documents should be in the form of a proposed change of text, together with appropriate supporting comments.

Interpretations: Occasionally questions may arise regarding the meaning of portions of standards as they relate to specific applications. When the need for interpretations is brought to the attention of IEEE, the Institute will initiate action to prepare appropriate responses. Since IEEE Standards represent a consensus of all concerned interests, it is important to ensure that any interpretation has also received the concurrence of a balance of interests. For this reason, IEEE and the members of its societies and Standards Coordinating Committees are not able to provide an instant response to interpretation requests except in those cases where the matter has previously received formal consideration.

Comments on standards and requests for interpretations should be addressed to:

Secretary, IEEE-SA Standards Board
445 Hoes Lane
P.O. Box 1331
Piscataway, NJ 08855-1331
USA

Note: Attention is called to the possibility that implementation of this standard may require use of subject matter covered by patent rights. By publication of this standard, no position is taken with respect to the existence or validity of any patent rights in connection therewith. The IEEE shall not be responsible for identifying patents for which a license may be required by an IEEE standard or for conducting inquiries into the legal validity or scope of those patents that are brought to its attention.

IEEE is the sole entity that may authorize the use of certification marks, trademarks, or other designations to indicate compliance with the materials set forth herein.

Authorization to photocopy portions of any individual standard for internal or personal use is granted by the Institute of Electrical and Electronics Engineers, Inc., provided that the appropriate fee is paid to Copyright Clearance Center. To arrange for payment of licensing fee, please contact Copyright Clearance Center, Customer Service, 222 Rosewood Drive, Danvers, MA 01923 USA; (978) 750-8400. Permission to photocopy portions of any individual standard for educational classroom use can also be obtained through the Copyright Clearance Center.

--`,,```,,,,````-`-`,,`,,`,`,,`---

Copyright The Institute of Electrical and Electronics Engineers, Inc.
Provided by IHS under license with IEEE
No reproduction or networking permitted without license from IHS Not for Resale

Introduction

(This introduction is not a part of IEEE Std C37.99-2000, IEEE Guide for the Protection of Shunt Capacitor Banks.)

IEEE Std C37.99-2000 incorporates a significant number of additions and changes since the guide was issued in 1990. Significant changes were made in the clauses dealing with capacitor bank and filter bank protection, unbalance relaying methods, and calculations. The annexes underwent significant changes. Other changes put this guide in line with present-day technologies related to the protection of externally fused, internally fused, fuseless, and unfused capacitor banks.

This guide was revised by the Shunt Capacitor Bank Protection Guide Revision Working Group of the Substation Protection Subcommittee of the Power System Relaying Committee of the IEEE Power Engineering Society. The working group membership at the time of completion of this revision was as follows:

Gerald E. Fenner, *Chair*
Simon R. Chano, *Vice Chair*

Stephen P. Conrad
Albert N. Darlington
Paul R. Drum
Philip J. Engel
Stephen E. Grier
J. E. Harder
Roger A. Hedding
Pratap G. Mysore
Kevin A. Stephan
James E. Stephens

The following members of the balloting committee voted on this standard:

John Appleyard
Robert W. Beckwith
Kenneth Behrendt
Stuart H. Bouchey
John Boyle
Larry Budler
Mark Carpenter
Simon R. Chano
D. Mason Clark
Stephen P. Conrad
Albert N. Darlington
Douglas C. Dawson
Robert W. Dempsey
Randall L. Dotson
Paul R. Drum
Walter Elmore
Ahmed Elneweihi
Philip J. Engel
Karl Fender
Gerald E. Fenner
Jonathan D. Gardell
Jeffrey G. Gilbert
Lawrence P. Gradin
John Kenneth Greene
Stephen E. Grier
E. A. Guro
Robert W. Haas
J. E. Harder
Roy E. Hart
Irwin O. Hasenwinkle
Roger A. Hedding
Charles F. Henville
John J. Horwath
James D. Huddleston, III
James W. Ingleson
K. J. Khunkhun
W. J. Marsh, Jr.
John R. Matras
Michael J. McDonald
Jeffrey L. McElray
M. Meisinger
Gary L. Michel
Daleep C. Mohla
Brian Mugalian
Pratap G. Mysore
George R. Nail
Bradley D. Nelson
Jeffrey H. Nelson
George R. Newcomb
Alan C. Pierce
Frank Plumptre
Roger E. Ray
John G. Reckleff
Thomas J. Rozek
Donald R. Ruthman
Bob Ryan
Miriam P. Sanders
Richard Sevigny
Tarlochan Sidhu
Mark S. Simon
Peter A. Solanics
Kevin A. Stephan
James E. Stephens
William M. Strang
Charles. Sufana
Malcolm J. Swanson
Richard P. Taylor
James S. Thorp
Joe T. Uchiyama
Eric A. Udren
Charles L. Wagner
William P. Waudby
David J. Zaprazny
Karl Zimmerman
John A. Zipp
Stan Zocholl
John A. Zulaski

--`,,```,,,,````-`-`,,`,,`,`,,`---

Copyright © 2000 IEEE. All rights reserved.

Copyright The Institute of Electrical and Electronics Engineers, Inc.
Provided by IHS under license with IEEE
No reproduction or networking permitted without license from IHS
Not for Resale

When the IEEE-SA Standards Board approved this standard on 30 January 2000, it had the following membership:

Richard J. Holleman, *Chair*
Donald N. Heirman, *Vice Chair*
Judith Gorman, *Secretary*

Satish K. Aggarwal	James H. Gurney	Louis-François Pau
Dennis Bodson	Lowell G. Johnson	Ronald C. Petersen
Mark D. Bowman	Robert J. Kennelly	Gerald H. Peterson
James T. Carlo	E. G. "Al" Kiener	John B. Posey
Gary R. Engmann	Joseph L. Koepfinger*	Gary S. Robinson
Harold E. Epstein	L. Bruce McClung	Akio Tojo
Jay Forster*	Daleep C. Mohla	Hans E. Weinrich
Ruben D. Garzon	Robert F. Munzner	Donald W. Zipse

*Member Emeritus

Also included is the following nonvoting IEEE-SA Standards Board liaison:

Robert E. Hebner

Greg Kohn
IEEE Standards Project Editor

--`,,```,,,,````-`-`,,`,,`,`,,`---
Copyright © 2000 IEEE. All rights reserved.
Copyright The Institute of Electrical and Electronics Engineers, Inc.
Provided by IHS under license with IEEE
No reproduction or networking permitted without license from IHS
Not for Resale

Contents

1. Overview 1

1.1 Scope 1
1.2 Purpose 1

2. References 1

3. Definitions 2

4. Basic considerations 4

4.1 Capacitor unit capabilities 6
4.2 Arrangement of capacitor units 6
4.3 Capacitor bank design 7
4.4 Overvoltage on remaining capacitor units 9

5. Bank connections 10

5.1 Grounded wye-connected banks 10
5.2 Ungrounded wye-connected banks 11
5.3 Delta-connected banks 12
5.4 H configuration 13

6. Other considerations 13

6.1 Single-point and peninsula grounding 13
6.2 Neutral grounding 15

7. Introduction to bank and system protection 16

7.1 Bank protection 17
7.2 System protection 21

8. Unbalance relaying methods 24

8.1 Introduction 24
8.2 General unbalance relay considerations 25
8.3 Externally fused capacitor banks 34
8.4 Internally fused capacitor banks 45
8.5 Fuseless capacitor banks 59
8.6 Unfused capacitor banks 67

9. Protection of capacitor filter banks 73

9.1 Filter bank protection 73
9.2 Multifrequency harmonic filter protection considerations 76
9.3 Static var compensator (SVC) capacitor protection 78
9.4 SVC filter protection 80

Copyright © 2000 IEEE. All rights reserved.

Copyright The Institute of Electrical and Electronics Engineers, Inc.
Provided by IHS under license with IEEE
No reproduction or networking permitted without license from IHS
Not for Resale

10. Capacitor bank equipment considerations 80

10.1 Capacitor bank switching devices 80
10.2 Inrush control devices 83
10.3 Surge arresters 84
10.4 Voltage-sensing devices 84
10.5 Current-sensing devices 84
10.6 Transient currents 85
10.7 Control cables 90

11. System considerations 91

11.1 Resonance 91
11.2 Harmonics 91
11.3 Telephone interference 91

12. Commissioning, operation, and maintenance 92

12.1 Preparation for initial energizing 92
12.2 Response to alarm or lockout (trip) 93

Annex A (informative) Symbol definitions 95

Annex B (informative) Bibliography 97

Annex C (informative) Equations for effect of inherent unbalances 99

Annex D (informative) Inrush current and frequency for switching capacitor banks 100

Copyright © 2000 IEEE. All rights reserved.

Copyright The Institute of Electrical and Electronics Engineers, Inc.
Provided by IHS under license with IEEE
No reproduction or networking permitted without license from IHS
Not for Resale

IEEE Guide for the Protection of Shunt Capacitor Banks

1. Overview

1.1 Scope

This guide applies to the protection of shunt power capacitor and filter banks. Included are guidelines for reliable applications of protection methods intended for use in many shunt capacitor applications and designs. The guide does not include a discussion of pole-mounted capacitor banks on distribution circuits or application of capacitors connected to rotating apparatus.

1.2 Purpose

This guide has been prepared to assist in the application of relays and other devices for the protection of shunt capacitor banks used in substations. It covers methods of protection for many commonly used shunt capacitor bank configurations. Capacitor bank design trade-offs are also discussed because bank design influences the protection. Additionally, this guide covers the protection of filter banks and large extra-high voltage (EHV) shunt capacitor banks.

2. References

This guide shall be used in conjunction with the following publications. If the following publications are superseded by an approved revision, the revision shall apply:

ANSI C37.06-1997, American National Standard AC High-Voltage Circuit Breakers Rated on a Symmetrical Current Basis—Preferred Ratings and Related Required Capabilities.[1]

ANSI C37.66-1969 (Reaff 1988), American National Standard for Requirements for Oil-Filled Capacitor Switches for Alternating-Current Systems.

IEEE Std 18-1992, IEEE Standard for Shunt Power Capacitors.[2]

---

[1]ANSI publications are available from the Sales Department, American National Standards Institute, 11 West 42nd Street, 13th Floor, New York, NY 10036, USA (http://www.ansi.org/). The ANSI documents listed in Clause 2 are also available from the Institute of Electrical and Electronics Engineers, 445 Hoes Lane, P.O. Box 1331, Piscataway, NJ 08855-1331, USA (http://standards.ieee.org/).

Copyright © 2000 IEEE. All rights reserved.

Copyright The Institute of Electrical and Electronics Engineers, Inc.
Provided by IHS under license with IEEE
No reproduction or networking permitted without license from IHS
Not for Resale

IEEE Std 469-1988 (Reaff 1994), IEEE Recommended Practice for Voice-Frequency Electrical-Noise Tests of Distribution Transformers.

IEEE Std 525-1992 (Reaff 1999), IEEE Guide for the Design and Installation of Cable Systems in Substations.

IEEE Std 1036-1992, IEEE Guide for Application of Shunt Power Capacitors.

IEEE Std 1143-1994, IEEE Guide on Shielding Practice for Low Voltage Cables.

IEEE Std C37.012-1979 (Reaff 1988), IEEE Application Guide for Capacitance Current Switching of AC High-Voltage Circuit Breakers Rated on a Symmetrical Current Basis.

IEEE Std C37.04-1979 (Reaff 1988), IEEE Standard Rating Structure for AC High-Voltage Circuit Breakers Rated on a Symmetrical Current Basis.

IEEE Std C37.2-1996, IEEE Standard Electrical Power System Device Function Numbers and Contact Designations.

IEEE Std C37.48-1997, IEEE Guide for Application, Operation, and Maintenance of High-Voltage Fuses, Distribution Enclosed Single-Pole Air Switches, Fuse Disconnecting Switches, and Accessories.

IEEE Std C37.90.1-1989 (Reaff 1994), IEEE Standard for Surge Withstand Capability (SWC) Tests for Protective Relays and Relay Systems.

IEEE Std C57.16-1996, IEEE Standard Requirements, Terminology, and Test Code for Dry-Type Air-Core Series-Connected Reactors.

IEEE Std C62.2-1987 (Reaff 1994), IEEE Guide for the Application of Gapped Silicon-Carbide Surge Arresters for Alternating Current Systems.

IEEE Std C62.22-1997, IEEE Guide for the Application of Metal-Oxide Surge Arresters for Alternating-Current Systems.

3. Definitions

For the purposes of this guide, the following terms and definitions apply:

3.1 back-to-back capacitor bank switching: Switching a capacitor bank with and in close electrical proximity to one or more other capacitor banks.

3.2 capacitor bank: An assembly at one location of capacitors and all necessary accessories, such as switching equipment, protective equipment, controls, etc., required for a complete operating installation. It may be a collection of components assembled at the operating site or may include one or more piece(s) of factory-assembled equipment.

3.3 capacitor control: The device required to automatically switch shunt power capacitor banks.

---

[2]IEEE publications are available from the Institute of Electrical and Electronics Engineers, 445 Hoes Lane, P.O. Box 1331, Piscataway, NJ 08855-1331, USA (http://standards.ieee.org/).

--`,,```,,,,````-`-`,,`,,`,`,,`---

Copyright © 2000 IEEE. All rights reserved.
Copyright The Institute of Electrical and Electronics Engineers, Inc.
Provided by IHS under license with IEEE
No reproduction or networking permitted without license from IHS Not for Resale

3.4 capacitor element (or element): A device consisting essentially of two electrodes separated by a dielectric.

3.5 capacitor inrush current: The transient charging current that flows in a capacitor when a capacitor bank is initially connected to a voltage source.

3.6 capacitor line fuse (capacitor group fuse): A fuse applied to disconnect a faulted phase of a capacitor bank from a power system.

3.7 capacitor outrush current: The high-frequency, high-magnitude current discharge of one or more capacitors into a short circuit, such as into a failed capacitor unit connected in parallel with the discharging units, or into a breaker closing into a fault.

3.8 capacitor unit (power capacitor): An assembly of dielectric and electrodes in a container (case), with terminals brought out, that is intended to introduce capacitance into an electric power circuit.

3.9 discharge device: An internal or external device intentionally connected in shunt with the terminals of a capacitor for the purpose of reducing the residual voltage after the capacitor is disconnected from an energized line.

3.10 filter capacitors: Capacitors utilized with inductors and/or resistors for controlling harmonic problems in the power system, such as reducing voltage distortion due to large rectifier loads or arc furnaces.

3.11 fixed bank: A capacitor bank that does not have a capacitor control and must be manually switched.

3.12 fused capacitor: A capacitor having fuses mounted on its terminals, inside a terminal enclosure, or inside the capacitor case, for the purpose of interrupting a failed capacitor.

3.13 fuseless capacitor bank: A capacitor bank without any fuses, internal or external, which is constructed of parallel strings of series-connected capacitor units between line and neutral (wye connection) or between line terminals (delta or single-phase). *See also:* **unfused capacitor bank.**

3.14 individual capacitor fuse: A fuse applied to disconnect an individual faulted capacitor from its bank.

3.15 internal fuse of a capacitor: A fuse connected inside a capacitor unit, in series with an element or a group of elements.

3.16 internally fused capacitor (unit): A capacitor unit that includes internal fuses.

3.17 kilovar (1000 vars): The practical unit of reactive power, equal to the product of the root-mean-square (rms) voltage in kilovolts (kV), the rms current in amperes (A), and the sine of the angle between them.

3.18 parallel-(element)-connected capacitor (unit): A capacitor unit with the elements connected in parallel groups, with the parallel groups connected in series between the line terminals. A capacitor unit that has only one string of capacitor elements between the capacitor terminals is considered to be parallel-connected.

3.19 series-(element)-connected capacitor (unit): A capacitor unit with the elements connected in series with each other between the line terminals, with more than one such series strings within a capacitor unit (see Figure 1).

Copyright © 2000 IEEE. All rights reserved.

Copyright The Institute of Electrical and Electronics Engineers, Inc.
Provided by IHS under license with IEEE
No reproduction or networking permitted without license from IHS
Not for Resale

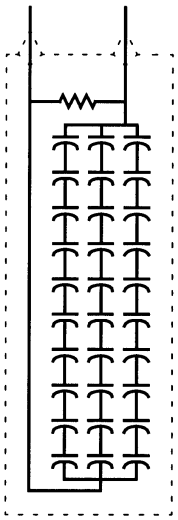

Figure 1—Series-connected capacitor unit with three strings of 10 elements (showing two shorted elements in one string)

3.20 string (string of capacitors) (string of capacitor elements): Capacitors connected in series between the line terminals.

3.21 switched bank: A capacitor bank designed for controlled operation.

3.22 thyristor-controlled reactor (TCR): The effective value of the reactor is changed by using thyristors to control the flow of current by phase-controlling the turn-on signal to the thyristors.

3.23 thyristor-switched capacitor (TSC): A capacitor switched on and off by thyristor control action.

3.24 unfused capacitor bank: Any capacitor bank without fuses, internal or external.

3.25 unfused capacitor (unit): A capacitor without any internal fuses.

4. Basic considerations

Relay protection of shunt capacitor banks requires an understanding of the terminology (see Figure 2), capabilities, and limitations of the individual capacitor units and associated electrical equipment. Four types of shunt capacitor bank connections or designs may affect the relay selection for the protection scheme

a) Externally fused, with individual fuses for each capacitor unit.
b) Internally fused, with each element fused inside the capacitor unit.
c) Fuseless, with capacitor units connected in series strings between line and neutral (or between line terminals).
d) Unfused, with the capacitor units connected in a variety of series and parallel arrangements.

See Figure 2 for examples of grounded wye-connected banks.

See Clause 2 for the applicable standards for the associated electrical equipment for the individual capacitor units, individual capacitor-unit fuses, bank switching devices, power fuses, voltage- or current-sensing devices, surge arresters, and reactors.

Copyright © 2000 IEEE. All rights reserved.
Copyright The Institute of Electrical and Electronics Engineers, Inc.
Provided by IHS under license with IEEE
No reproduction or networking permitted without license from IHS
Not for Resale

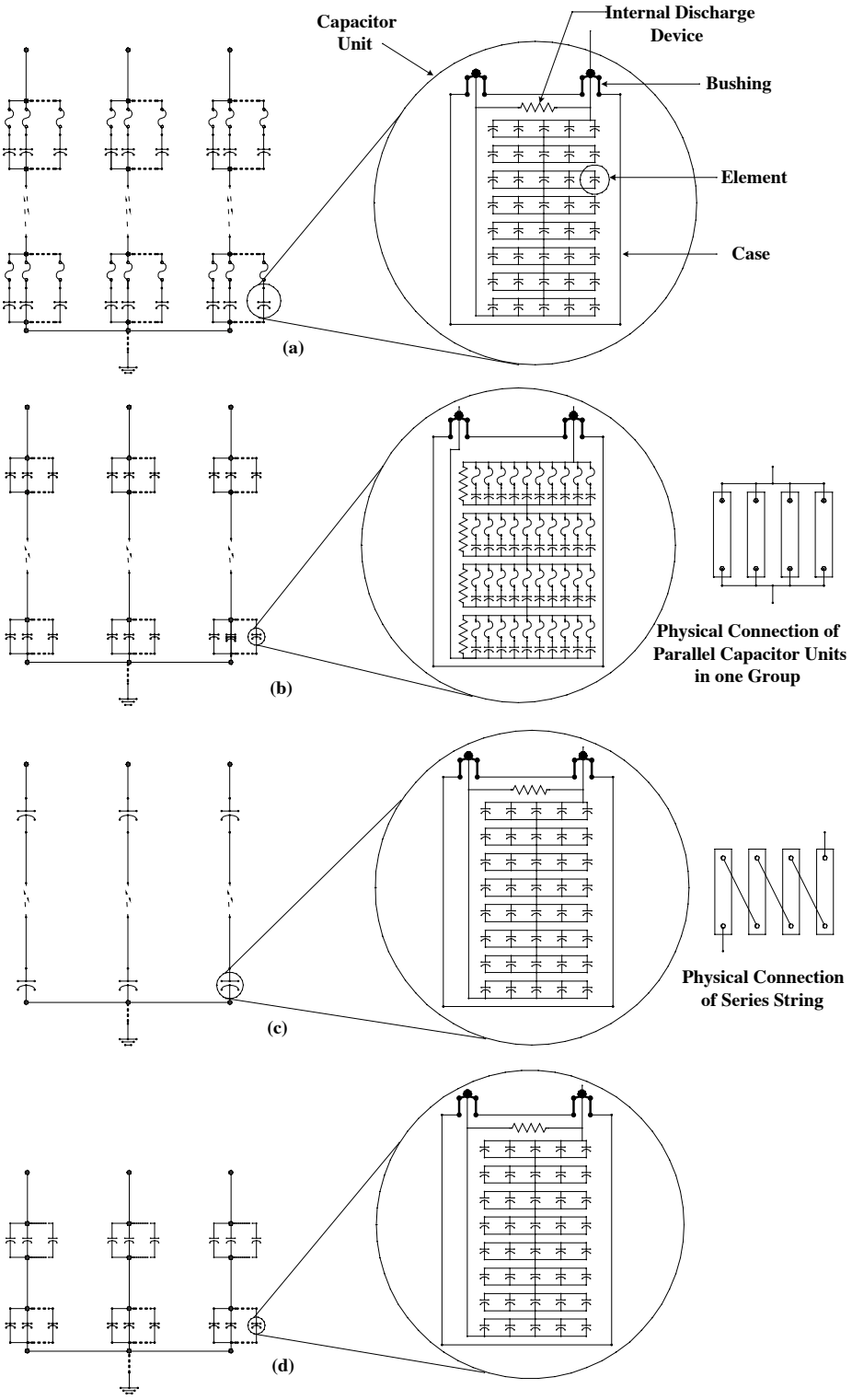

(a) Externally fused (c) Fuseless (can use multiple strings)
(b) Internally fused (d) Unfused

Figure 2—Wye-connected capacitor bank

--`,,```,,,,````-`-`,,`,,`,`,,`---
Copyright © 2000 IEEE. All rights reserved.

Copyright The Institute of Electrical and Electronics Engineers, Inc.
Provided by IHS under license with IEEE
No reproduction or networking permitted without license from IHS
Not for Resale

4.1 Capacitor unit capabilities

IEEE Std 18-1992[3] specifies the standard ratings of the capacitors designed for shunt connection to ac transmission and distribution systems. IEEE Std 1036-1992 gives application guidelines for these capacitors. Capacitors are intended to be operated at or below their rated voltage and frequency. Capacitors are capable of continuous operation under contingency system and bank conditions, provided the following limitations are not exceeded:

a) Capacitor units should be capable of continuous operation including harmonics, but excluding transients, to 110% of rated terminal root-mean-square (rms) voltage and a crest voltage not exceeding $1.2 \times \sqrt{2}$ of rated rms voltage. The capacitor should also be able to carry 135% of nominal current. The voltage capability of any series element of a capacitor unit shall be considered to be its share of the total capacitor unit voltage capability.

b) Capacitor units should not give less than 100% nor more than 115% (110% for capacitor units manufactured in conformance with IEEE Std 18-1992 after the year 2000) of rated reactive power at rated sinusoidal voltage and frequency, measured at a uniform case and internal temperature of 25 °C.

c) Capacitor units mounted in multiple rows and tiers should be designed for continuous operation for a 24 h average temperature of 40 °C during the hottest day, or –40 °C during the coldest day expected at the location.

d) Capacitor units should be suitable for continuous operation at up to 135% of rated reactive power caused by the combined effects of

   1) Voltage in excess of the nameplate rating at fundamental frequency, but not over 110% of rated rms voltage.

   2) Harmonic voltages superimposed on the fundamental frequency.

   3) Reactive power manufacturing tolerance of up to 115% of rated reactive power.

e) Capacitor units rated above 600 V shall have an internal discharge device to reduce the residual voltage to 50 V or less in 5 min. Capacitor units are available in a variety of voltage ratings (240 V to 24 940 V) and sizes (2.5 kvar to about 1000 kvar). Capacitor units designed for special applications can exceed these ratings (see IEEE Std 18-1992). See IEEE Std 1036-1992 for capacitor short-time overvoltage capability.

4.2 Arrangement of capacitor units

Depending on the application, any of the four connections (i.e., externally fused, internally fused, fuseless, unfused) may be suitable.

4.2.1 Externally fused shunt capacitor banks

Externally fused substation shunt capacitor banks are configured using one or more series groups of parallel-connected capacitor units per phase. Each capacitor unit is typically protected by an individual fuse, externally mounted between the capacitor unit and the capacitor bank fuse bus. See Figure 2(a). The capacitor unit can be designed for a relatively high voltage because the external fuse is capable of interrupting a high-voltage fault. However, the kilovar rating of the individual capacitor unit may be smaller because a minimum number of parallel units are required to allow the bank to remain in service with one fuse or unit out.

[3]Information on references can be found in Clause 2.

--`,,```,,,,````-`-`,,`,,`,`,,`---
Copyright © 2000 IEEE. All rights reserved.
Copyright The Institute of Electrical and Electronics Engineers, Inc.
Provided by IHS under license with IEEE
No reproduction or networking permitted without license from IHS
Not for Resale

4.2.2 Internally fused shunt capacitor banks

Figure 2(b) illustrates a typical capacitor bank utilizing internally fused capacitor units. In general, banks employing internally fused capacitor units are configured with fewer capacitor units in parallel and more series groups of units than are used in banks employing externally fused capacitor units. The capacitor units are normally large because a complete unit is not expected to fail.

An internal fuse is connected in series with each capacitor element. Each internally fused capacitor unit is constructed with a large number of elements connected in parallel to form a group and with only a few groups connected in series. This construction is the opposite to that found in externally fused capacitors, which normally employ a large number of series groups made up of parallel connected elements, with correspondingly fewer elements connected in parallel per series group. With internally fused capacitors, when a capacitor element fails, the current through its individual fusible link will be considerably higher than the normal current. This higher current will blow the fusible link, thereby isolating the failed element.

4.2.3 Fuseless shunt capacitor banks

Fuseless shunt capacitor banks are normally used for applications at or above 34.5 kV. The capacitor units are normally designed with two bushings with the elements insulated from the case. The capacitor units are connected in series strings between phase and neutral (or between line terminals for delta-connected or single-phase installations). The protection is based on the capacitor element's failing in a shorted mode. The discharge energy is small because no capacitor units are connected directly in parallel. Another advantage is that the unbalance protection does not have to be delayed to coordinate with the fuses. See Figure 2(c).

4.2.4 Unfused shunt capacitor banks

The unfused shunt capacitor approach uses a series/parallel connection of the capacitor units. The voltage across the remaining elements will increase more than in the fuseless design. The unfused approach would normally be used on banks below 34.5 kV (where series strings are not practical) or on higher voltage banks with modest parallel energy. This design does not require as many capacitor units in parallel as an externally fused bank. See Figure 2(d).

4.3 Capacitor bank design

4.3.1 Externally fused

An externally fused shunt capacitor bank of a given size and voltage rating may be made up of a number of series and parallel groups. Use of capacitors with the highest possible voltage rating will result in a capacitor bank with the fewest number of series groups. This arrangement generally provides the simplest rack structure and the greatest sensitivity for unbalance detection schemes. The available unbalance signal level decreases significantly as the number of series groups of capacitors is increased or as the number of capacitor units in parallel per series group is increased.

The number of capacitor units in parallel per series group is governed by both a minimum and maximum limitation. The minimum number of capacitor units per group is determined by the overvoltage considerations upon isolation of one capacitor unit in the group and also having sufficient overcurrent through a fuse on a faulted capacitor unit to blow the fuse in a reasonably short time (so that the unbalance protection does not require a long time delay). The general rule is that isolation of one capacitor unit in a group should not cause voltage unbalance sufficient to place more than 110% of rated voltage on the remaining capacitors in the group. The value of 110% is the maximum continuous overvoltage capability of capacitor units as per IEEE Std 18-1992.

--`,,```,,,,````-`-`,,`,,`,`,,`---
Copyright © 2000 IEEE. All rights reserved.

Copyright The Institute of Electrical and Electronics Engineers, Inc.
Provided by IHS under license with IEEE
No reproduction or networking permitted without license from IHS
Not for Resale

The minimum recommended number of capacitor units in parallel per series group may limit the maximum capacitor-unit kilovar rating that can be used for relatively small banks. Capacitor units with the highest possible voltage rating and minimum number of series groups are used in order to obtain an adequate number in each group.

The maximum number of capacitor units that may be placed in parallel per series group is governed by a different consideration. When a capacitor unit fails, other capacitors in the same parallel group will contain some amount of charge. This charge will drain off as a high-frequency transient current that flows through the failed capacitor unit and its fuse. The fuse holder and the failed capacitor unit should withstand this discharge transient.

For a large number of parallel externally fused capacitors, to minimize the probability of failure of the expulsion fuse holder or rupture of the capacitor case, or both, NEMA CP1-1988 [B11][4] recommends that the total energy stored in a parallel connected group of capacitors should not exceed 15 000 J for all-film dielectric capacitor units (10 000 J for older all-paper or paper-film dielectric capacitor units) at maximum peak voltage (rated voltage $\times 1.1 \times \sqrt{2}$). For 60 Hz applications, NEMA CP1-1988 recommends a total parallel kilovar limit of 4650 kvar for all film dielectric capacitor units (3100 kvar for older capacitor units). All film dielectric capacitor banks have been applied up to 9600 kvar in parallel with expulsion fuses (Mendis et al. [B9]). Consult the capacitor and fuse manufacturer before exceeding the 4650 kvar limit to ensure that the total available discharge energy (including energy from capacitors in a parallel wye and/or in parallel banks) does not exceed the discharge energy capability of the fuse or the faulted capacitor.

If a capacitor bank having the minimum number of series groups has more than 4650 kvar per series group, capacitors of a lower voltage rating requiring more series groups and fewer units in parallel per group may be a suitable solution. However, this arrangement will reduce the sensitivity of the unbalance detection scheme. The bank may be removed from service (for a reduced number of isolated capacitor units) because the voltage across the remaining units exceeds 110% of their rated voltage. Splitting the bank into two sections, as a double wye, may be a preferred arrangement and may permit a better unbalance detection scheme. Failure of fewer capacitor units can result in the removal of the bank. Another possibility is the use of current-limiting fuses in a single wye configuration.

4.3.2 Internally fused

An internally fused shunt capacitor bank of a given size and voltage rating may be made up of a number of series and parallel groups.

Use of capacitors with the highest possible kilovar rating will result in a capacitor bank with the fewest number of capacitor units. This arrangement generally provides the simplest rack structure and the largest number of element failures before unbalance tripping is required.

It is usually desirable to have at least two units in parallel in each series group. In the event of a large number of internal fuse operations in one capacitor unit, the other capacitor helps keep the terminal voltage of the affected capacitor down.

The maximum number of capacitor units that may be placed in parallel per series group is governed by the parallel energy capability of the internal fuses. Placing too many capacitor units in parallel can jeopardize the operation of the fuses. The manufacturer of the capacitor units should recommend the maximum number of capacitor units to be connected directly in parallel.

If a proposed capacitor bank having the minimum number of series groups has too many capacitor units in parallel, it may be possible to reduce the parallel energy by changing the number of series groups or by rearranging the bank into multiple wyes.

[4]The numbers in brackets correspond to those of the bibliography in Annex B.

Copyright © 2000 IEEE. All rights reserved.
Copyright The Institute of Electrical and Electronics Engineers, Inc.
Provided by IHS under license with IEEE
No reproduction or networking permitted without license from IHS
Not for Resale

4.3.3 Fuseless banks

Fuseless banks require a high system voltage (about 34.5 kV minimum). Capacitor units are connected in series strings. The capacitor units usually have two bushings and may have additional insulation between the capacitor elements and the case. Each string usually has more than 10 elements in series to ensure that the remaining elements do not exceed 110% rating if an element in the string shorts. If a large fuseless bank is required, several strings can be connected in parallel.

4.3.4 Unfused banks

An unfused bank would have a series/parallel arrangement. Relay settings normally require the bank to trip when the voltage on remaining capacitor units exceeds 110% of rated voltage or the overvoltage on remaining elements in a faulted capacitor unit is high enough that cascading failure on system transient overvoltage is likely. On smaller banks, tripping may be based on the failure of a single element. (For small banks, the probability of element failure may be small, given the small total number of elements.)

4.4 Overvoltage on remaining capacitor units

The overvoltages that occur when individual capacitor elements fail or internal or external fuses operate determine whether the bank should be removed from service. Usually the larger the kilovar rating of an individual capacitor unit, the simpler the bank design, but the unit size will affect the resulting overvoltages following fuse operation or element shorting.

4.4.1 Externally fused bank

For an externally fused bank of a given size, use of a larger individual capacitor-unit kilovar rating decreases the number of parallel capacitor units per group and increases the overvoltage change due to isolation of a single capacitor. Failure of additional capacitors is likely to occur in the same parallel group as the first failure because these remaining capacitor units have the highest voltage stress. However, if two capacitors fail in different parallel groups, the overvoltage percentage is less than that of the two capacitors failing in the same parallel group.

4.4.2 Internally fused bank

An internally fused bank can connect the capacitor elements inside the capacitor unit in various series and parallel configurations to minimize the overvoltage stress on the remaining internal elements and unaffected capacitor units when fuses operate.

4.4.3 Fuseless bank

Fuseless bank design depends on the capacitor elements being connected in series, and the expected failure mode of the capacitor element will be a short circuit. The higher the voltage for the bank, the more capacitor elements in series. If an element shorts, the remaining capacitor elements will absorb the additional voltage. The additional voltage on each element will be approximately equal to $E/(E - 1)$ where E is the original number of capacitor elements in the string.[5] The continuous and overvoltage capability of the elements is equal to the capability of the capacitor unit divided by the number of elements in series within the capacitor unit.

[5]Many of the variables in this guide have not been specially formatted (i.e., using italics or superscripting and subscripting). This has been done intentionally to match the appearance of the variables in the spreadsheets presented herein.

Copyright © 2000 IEEE. All rights reserved.

Copyright The Institute of Electrical and Electronics Engineers, Inc.
Provided by IHS under license with IEEE
No reproduction or networking permitted without license from IHS
Not for Resale

4.4.4 Unfused bank

The unfused capacitor bank has no fuses. Unbalance protection should be applied so that following failures, the resulting voltage on the remaining healthy capacitor units does not exceed 110% of their rating or the recommended level specified by the manufacturer.

5. Bank connections

Five capacitor bank connections are common. The optimum connection depends on the best utilization of the available voltage ratings of capacitor units, fusing, and protective relaying. These connections can be used for externally fused capacitor bank design, internally fused capacitor bank design, fuseless capacitor bank design (if enough elements are connected in series for a protection scheme to be applied), and unfused capacitor bank design. Virtually all substation banks are connected wye. Distribution capacitor banks, however, may be connected wye or delta. Some banks use an H configuration on each of the phases with a current transformer in the connecting branch to detect the unbalance.

The various types of connections are illustrated in Figure 3.

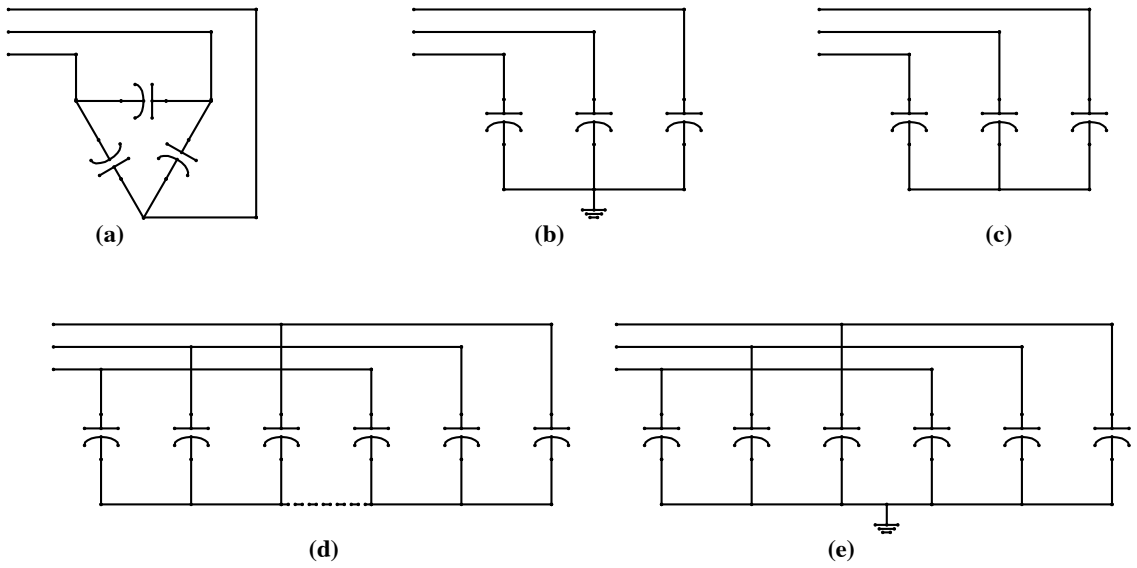

(a) Delta
(b) Grounded wye
(c) Ungrounded wye
(d) Ungrounded double wye (neutrals may or may not be tied)
(e) Grounded double wye

Figure 3—Basic capacitor bank connections

5.1 Grounded wye-connected banks

Grounded wye capacitor banks, composed of series- and parallel-connected capacitor units per phase, may require overvoltage/unbalance protection. Figure 2 shows typical bank arrangements.

Grounded capacitor banks provide a low-impedance path to ground for lightning surge currents and give some protection from surge voltages. Some banks may be operated without surge arresters, taking advantage of the capability of the capacitors to absorb the surge.

--`,,```,,,,````-`-`,,`,,`,`,,`---
Copyright © 2000 IEEE. All rights reserved.
Copyright The Institute of Electrical and Electronics Engineers, Inc.
Provided by IHS under license with IEEE
No reproduction or networking permitted without license from IHS
Not for Resale

Grounded capacitor banks also provide a low-impedance path to ground for triplen harmonic currents. These harmonic currents may cause communication facility interference, if such circuits parallel power lines. Additionally, an open phase produces zero sequence currents that may cause ground relay operations. Harmonic resonance may also be a problem.

When the neutral is grounded, recovery voltages encountered during switching are reduced; however, careful consideration should be given to the effect of inrush current on protective relay performance (see Clause 11) and the method of grounding (see 6.2).

5.1.1 One unit phase to ground

There is no overvoltage across the remaining capacitor units if a failed, externally fused capacitor unit is isolated with a fuse; therefore, unbalance relay protection is not required. The individual external capacitor fuses shall be capable of interrupting the system available fault current.

Internally fused and unfused capacitor banks should have unbalance protection to avoid excessive element voltages and to trip the bank for severe unbalance conditions.

5.1.2 Multiple units in series phase to ground—single wye

Grounded wye externally fused capacitor banks above 34.5 kV are commonly composed of two or more series groups of parallel connected capacitor units per phase. The presence of multiple series groups of units limits the maximum fault current so that individual current-limiting fuses are usually not required unless the parallel kilovar exceeds 4650 kvar or the level specified by the manufacturer.

Internally fused capacitor units should be arranged in the bank design to ensure that energy in the parallel group does not exceed the interrupting capability of the internal fuses. Relatively small banks can be designed with internally fused capacitor units and still use large capacitor units for a simple design.

The fuseless design is not usually applied for system voltages less than about 34.5 kV. The reason is that there shall be more than 10 elements in series so that the bank does not have to be removed from service for the failure of one element because the voltage across the remaining elements would increase by a factor of about E/(E – 1) where E is the number of elements in the string.

5.1.3 Multiple units in series phase to ground—double wye

When a capacitor bank becomes too large, making the parallel energy of a series group too great for the capacitor units or fuses, the bank may be split into two wye sections. The characteristics of the grounded double wye are similar to a grounded single wye bank. The two neutrals should be directly connected with a single connection to ground.

The double wye design allows a secure and faster protection with a simple uncompensated relay because any system zero sequence unbalance affects both wyes equally, but a failed capacitor unit will be detected in the neutral unbalance. Time coordination may be required to allow a fuse to blow in or on a failed capacitor unit. If it is a fuseless design, the time delay can be set short because no fuse coordination is required. If the current through the string exceeds the continuous current capability of the capacitor unit, more strings shall be added in parallel (for example, wye wye-wye wye).

5.2 Ungrounded wye-connected banks

Ungrounded wye banks do not permit zero sequence currents, third harmonic currents, or large capacitor discharge currents during system ground faults. (Phase-to-phase faults may still occur and will result in large discharge currents.) The neutral, however, should be insulated for full line voltage because it is momentarily

Copyright © 2000 IEEE. All rights reserved.

Copyright The Institute of Electrical and Electronics Engineers, Inc.
Provided by IHS under license with IEEE
No reproduction or networking permitted without license from IHS
Not for Resale

at phase potential when the bank is switched or when one capacitor unit fails in a bank configured with a single group of units.

5.2.1 One unit phase to neutral

For systems with line-to-neutral voltages corresponding to available capacitor ratings, wye-connected capacitor banks with a single series group per phase may be used. The capacitor bank neutral may be ungrounded in order to avoid the need for power fuses to interrupt the system short-circuit fault current or to minimize the flow of triplen harmonics, which can cause telephone interference. This design requires that single-bushing capacitor units be mounted on an insulated rack. If two-bushing capacitor units are used with a grounded rack, a fault to the case will be a system line-to-ground fault. High system fault currents may lead to case rupture. For externally fused capacitor banks, the fuses should be selected to interrupt the available phase-to-ground short-circuit current. If lower rated fuses are used, a fault to the capacitor case may not be cleared by the capacitor-unit fuse and will require that the fault be cleared by the capacitor bank overcurrent protective devices. Ungrounded wye capacitor banks usually do not require current-limiting capacitor-unit fuses because current through a faulted capacitor unit is limited to three times normal phase current. However, caution needs to be exercised when re-fusing a bank of this type because faulted capacitors in different phases could result in a phase-to-phase system fault.

5.2.2 Multiple units in series phase to neutral—single wye

Wye banks with multiple series groups may also be ungrounded. Such a bank does not provide a path to ground for a surge voltage and provides no path to ground for third harmonic currents. The entire bank, including the neutral, should be insulated for full line voltage.

Capacitor units with external fuses, internal fuses, or no fuses (fuseless or unfused design) can be used to make up the bank. For unbalance protection schemes that are sensitive to system voltage unbalance, either the unbalance protection time delay shall be set long enough for the line protections to clear the system ground faults or the capacitor bank may be allowed to trip off for a system ground fault.

5.2.3 Multiple units in series phase to neutral—double wye

When a capacitor bank becomes too large for the 4650 kvar per group maximum for expulsion fuses and is large enough to meet the minimum units per group requirement as outlined in 4.2, the bank may be split into two wye sections. When the two neutrals are ungrounded, the bank has some of the characteristics of the ungrounded single-wye bank. These two neutrals may be tied together through a current transformer or a voltage transformer. As for any ungrounded wye bank, the neutral instrument transformers should be insulated from ground, as should the phase terminals, for full line-to-ground voltage.

5.3 Delta-connected banks

Delta-connected banks are generally used only at distribution voltages and are configured with a single series group of capacitors rated at line-to-line voltage. Delta-connected banks require a two-bushing capacitor or single-bushing units with insulated racks. Delta-connected banks are frequently used at 2400 V because capacitor units for wye connection at 2400 V are not readily available.

With only one series group of units, no overvoltage occurs across the remaining capacitor units from the isolation of a faulted capacitor unit. Therefore, unbalance detection is not required for protection, but may be used to detect the outage of units within the bank. No zero-sequence or third harmonic currents can flow into a delta-connected capacitor bank.

Where one series group per leg is used, the individual capacitor fuses shall be capable of interrupting the system short-circuit phase-to-phase fault current. This design may necessitate current-limiting fuses.

Copyright © 2000 IEEE. All rights reserved.
Copyright The Institute of Electrical and Electronics Engineers, Inc.
Provided by IHS under license with IEEE
No reproduction or networking permitted without license from IHS
Not for Resale

If internally fused capacitor units are used, unbalance detection is required to detect a capacitor with failed elements. There is no visible indication of a blown fuse. Two or more series groups are normally required in each capacitor unit to enable the internal fuses to interrupt the fault current.

Static var compensators usually use the delta connection for the thyristor-switched capacitors (TSCs) to simplify the controls and optimize the use of the thyristor valve.

5.4 H configuration

Some larger banks use an H configuration in each phase with a current transformer connected between the two legs to compare the current down each leg. As long as all the capacitors are normal, no current will flow through the current transformer. If a capacitor fuse operates, some current will flow through the current transformer. This bridge connection can be very sensitive. This arrangement is used on large banks with many capacitor units in parallel.

6. Other considerations

The performance of the protection method can be influenced by the design of the capacitor bank. Therefore, protection begins with bank design (see 4.3). In general, shunt capacitor bank design requirements necessitate an increase in minimum bank size with system voltage. The higher the system voltage, the larger the bank investment and risk of costly damage. Although capacitors having large kilovar ratings may reduce the overall cost of the bank, they may also reduce the choice of different capacitor combinations.

6.1 Single-point and peninsula grounding

Where two or more grounded wye banks are at the same location, the neutrals should be directly connected, with a single connection to ground (single-point grounding). The design of the substation ground grid and the connections of the respective bank neutrals to the substation grid is of prime importance. Improper grounding can result in neutral current transformer, voltage transformer, or control cable failures. Two methods of neutral grounding have been successfully used: single-point grounding and peninsula grounding. See Figure 4.

With single-point grounding, the neutrals of all capacitor banks of a given voltage are connected together with insulated cable, or an isolated bus, and tied to the substation ground grid at only one point. This arrangement prevents high-frequency currents that flow between banks during back-to-back switching from flowing in the ground grid. In the event of a nearby ground fault, however, this arrangement does not eliminate high-frequency currents that flow back into the power system via the substation ground grid.

With peninsula grounding, one or more ground grid conductor(s) are carried underneath the capacitor rack of each phase of each group and tied to the main station ground grid at one point at the edge of the capacitor area. All capacitor bank neutral connections are made to this isolated peninsula ground grid conductor(s) only (Rogers and Gillies [B12]). Although this arrangement allows the capacitor bank neutral potential (and associated current transformers and voltage transformers) to rise during capacitor bank switching, it does help reduce these transients in the rest of the substation. See Figure 4.

If single-point grounding is used, the voltage will be substantial (tens of kilovolts) between the ends of the neutral bus and the single-point ground during switching. As a result, the primary-to-secondary insulation of neutral current transformers, or voltage transformers, will be subjected to this voltage, increasing the possibility of failure. A voltage transformer with two bushings should be used with the primary connected to the capacitor bank neutral and to the station ground grid.

--`,,```,,,,````-`-`,,`,,`,`,,`---
Copyright © 2000 IEEE. All rights reserved.

Copyright The Institute of Electrical and Electronics Engineers, Inc.
Provided by IHS under license with IEEE
No reproduction or networking permitted without license from IHS
Not for Resale

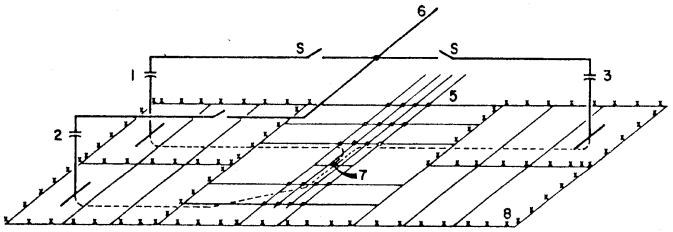

.....	Insulated capacitor neutrals	Capacitor bank neutral cables insulated, tied together, and connected to station ground grid at one point; all equipment grounds connected to station ground grid.
1,2,3	Three-phase capacitor groups	
5	Substation ground grid	
6	High-voltage bus	
7	Single-point capacitor neutral ground	
8	Capacitor group fence	

(a) Single-point grounding

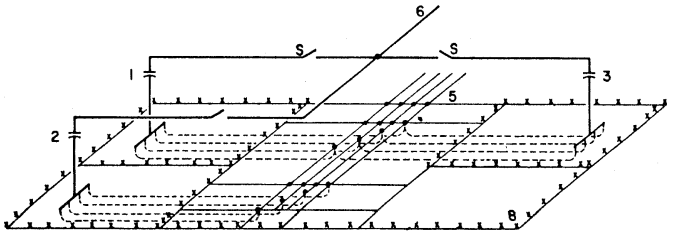

.....	Peninsula ground grid (bare)	Capacitor bank neutrals and all equipment grounds tied together and connected to station ground grid at one point; neutral leads routed beneath phase conductors.
1,2,3	Three-phase capacitor groups	
5	Substation ground grid	
6	High-voltage bus	
8	Capacitor group fence	

(b) Peninsula grounding

Figure 4—Single-point and peninsula grounding

This does not occur with peninsula grounding because all equipment at the neutral tends to rise to the same potential. Peninsula grounding coordinated with control cable shielding and grounding will keep common mode voltages, appearing on control cables in the control house, to safe levels.

Single-point grounding and peninsula grounding may be used together. It is desirable for all capacitor banks of the same system voltage to use the same grounding scheme in the same substation.

When energizing a capacitor bank, the magnitude of voltage disturbances on the system is greatly reduced by the presence of one or more additional banks of comparable size connected to the same bus. During a closing operation or a restrike, however, the transient inrush current through the switching device between the energized banks and the one being switched can be very large. These currents are oscillatory at very high frequencies. The peak current may be on the order of 50–100 times the normal peak of the capacitor bank current. Such a high instantaneous current can produce high forces in the interrupter of the switching device, and such forces may be damaging to the contacts or linkage.

Because the severity of parallel bank switching is caused by the very sudden high current, which initially is limited only by the very low resistance and inductance of the circuit between the banks, it can be reduced by the addition of inductance to the circuit. An inductance with a 60 Hz reactance as low as 0.5–1% of the 60 Hz capacitive reactance of the banks placed in series with them will greatly reduce both the rate of rise

Copyright © 2000 IEEE. All rights reserved.
Copyright The Institute of Electrical and Electronics Engineers, Inc.
Provided by IHS under license with IEEE
No reproduction or networking permitted without license from IHS
Not for Resale

and the peak value of the inrush current. This inductance greatly reduces the severity of the switching device duty. Additional inductance may be obtained by increasing the length of the bus between the capacitor banks or adding current-limiting reactors. The reactors may be air core or consist of magnetic cores surrounding the leads or bus.

Preinsertion resistors or inductors on the capacitor switching device, or synchronous (zero voltage) closing, can also effectively limit the inrush current. The use of insertion resistors or reactors or zero-crossing closing controls minimizes the switching transient on closing, but does not help reduce the outrush current for close in faults (McCauley et al. [B8]). Fixed reactors may be required to reduce the transient currents in order to

— Minimize the possibility of induced voltages affecting the relaying.
— Avoid damaging other equipment (Rogers and Gillies [B12]; Alexander [B2]; McCauley et al. [B8]).

6.2 Neutral grounding

The application of large shunt capacitor banks with switched parallel banks in high-voltage transmission systems involves a number of considerations, one of which is grounding. It is generally recommended that the neutral of capacitor banks be grounded only to systems that are effectively grounded. In the event of a phase-to-ground fault, a grounded capacitor bank neutral in an otherwise ungrounded system may lead to high transient overvoltages in the system and capacitor bank as a result of restriking of the arcing fault to ground.

One of the main advantages associated with neutral grounding concerns the severity of the recovery voltage across the first pole of the switch to clear, interrupting the charging current of the capacitor bank. The recovery voltage across the first pole to open consists of trapped charges on the capacitors and the variation in the 60 Hz voltage of the system. Due to system parameters and capacitor bank size, the recovery voltage can be approximately two times normal peak voltage when the bank is grounded. On an ungrounded bank, the magnitude of the first peak of the recovery voltage can be as high as three times the peak system line-to-ground voltage when the bank is switched.

Because recovery voltage is a critical factor in determining the capability of a switching device to switch capacitive reactive power, it may be desirable (in terms of switch performance) to ground the neutral of shunt capacitor banks. IEEE Std C37.04-1979 and ANSI C37.06-1997 recommend that both the shunt capacitor bank and the system be grounded at voltage levels of 121 kV and above. Many capacitor banks of higher voltage are installed ungrounded, but the circuit breaker manufacturer should be consulted for the application of a breaker if these conditions are not met.

While many shunt capacitor banks are directly connected to a high-voltage substation bus, switched capacitor banks may be applied to tertiaries of power transformers that are connected to the line or possibly to the bus. Grounding the neutral of the wye-connected capacitor bank should be done only on an effectively grounded system. For instance, the delta tertiary of the auto transformer represents an isolated source; grounding the capacitor bank neutral makes this side of the transformer capacitively grounded. Overvoltages may be experienced during line-to-ground faults for certain ratios of X_0/X_1, depending on system, transformer, and capacitor bank parameters. If the neutral is to be grounded on a system that is not effectively grounded, the application should be thoroughly analyzed for proper application of surge arresters, bank configuration, bank switching devices, etc.

Copyright © 2000 IEEE. All rights reserved.

Copyright The Institute of Electrical and Electronics Engineers, Inc.
Provided by IHS under license with IEEE
No reproduction or networking permitted without license from IHS
Not for Resale

7. Introduction to bank and system protection

The protection of shunt capacitor banks involves both bank and system protection schemes.

Bank protection schemes are provided for faults within the capacitor bank itself. Bank protection may include items such as a means to disconnect a faulted capacitor unit or capacitor element(s), a means to initiate a shutdown of the bank in case of faults that may lead to a catastrophic failure, and alarms to indicate unbalance within the bank.

System protection schemes are provided to protect the capacitor bank from stresses that may be caused by the system and to protect the substation and system from stresses that may be caused by the operation of the capacitor bank. System protection may include items such as a means to limit overvoltage and excessive transient overcurrents, and to disconnect the bank in the event of a major fault within the capacitor installation. System protection may also include alarms and/or a method to disconnect the entire shunt capacitor bank in order to prevent further damage to the capacitors due to abnormal system conditions.

Table 1 lists various bank and system protection schemes typically applied to shunt capacitor banks. Each of the conditions listed should be considered when providing protection for a shunt capacitor bank.

Table 1—Bank and system protection

Bank protection		
Condition	**Type of protection**	**Remarks**
Faulted capacitor element.	External or internal fuse for fused banks; weld, which occurs at the failure, for banks without fuses.	Fuses should be fast to coordinate with fast unbalance relay settings, but should not operate during switching or external faults.
Fault from capacitor elements to case, bushing failure, faulty connection in capacitor unit.	Fuse for externally fused capacitor; unbalance protection for internally fused banks or banks without fuses.	For externally fused capacitor banks, fuses should be fast to coordinate with fast unbalance relay settings, but should not operate during switching or external faults. For internally fused banks or banks without fuses, the unbalance protection should be fast to avoid case rupture, but should not operate during switching or external faults.
Fault in capacitor bank other than in unit (arcing fault in bank).	Unbalance protection. Relay should have a band-pass filter for the fundamental current or voltage for security.	Unbalance protection should be fast to minimize damage to other units during a major fault. See 7.1.4.
Continuous overvoltage on capacitor elements or units due to faulted elements or fuse operations within the bank.	Unbalance protection. Relay should have a band-pass filter for the fundamental current or voltage for security.	Bank should be tripped for voltages > 110% of rated voltage or as recommended by manufacturer on healthy capacitor units. An alarm may be added for 5% unbalance or one unit out. (In some critical applications an alarm with delayed tripping above 110% of rated voltage is used; see 7.1.4.)
Rack-to-rack flashover in two series group phase-over-phase single wye banks.	Phase overcurrent or negative sequence relay; unbalance current for wye-wye capacitor banks.	Fast operation is required to minimize damage. See 7.1.4 and 7.1.5.
System protection		
Condition	**Type of protection**	**Remarks**
System surge overvoltage.	Surge arresters.	Selection of surge arrester may require consideration of bank energy, particularly for larger capacitor banks.
Power frequency system overvoltage.	Phase voltage relays.	For a distorted voltage waveform, the capacitor dielectric is sensitive to the peak voltage.

Copyright © 2000 IEEE. All rights reserved.
Copyright The Institute of Electrical and Electronics Engineers, Inc.
Provided by IHS under license with IEEE
No reproduction or networking permitted without license from IHS
Not for Resale

Table 1—Bank and system protection (continued)

System protection *(continued)*		
Condition	**Type of protection**	**Remarks**
Harmonic current overloading.	Relay sensitive to harmonic current.	Where excessive harmonic currents are anticipated, harmonic relaying may be required.
Bus fault in capacitor installation or major capacitor bank failure.	a) Circuit breaker or circuit switcher with conventional relays, or b) Power fuses.	Relays or power fuses should be as fast as possible without nuisance operations due to outrush currents into nearby faults.
Fault in or near substation, but outside capacitor installation.	Inrush and outrush limiting reactors.	Reactors may be required to protect circuit breakers, current transformer circuits, and other components against excessive currents or induced voltages.
Excessive inrush current.	a) Insertion resistor or reactor in switch, breaker, or circuit switcher, or b) Inrush and outrush limiting reactors between capacitor banks, or c) Synchronous (zero voltage) closing of the switch or circuit breaker.	Energizing a capacitor bank in close proximity to an energized capacitor bank may result in excessive inrush currents, damaging circuit breakers or switches, causing undesired fuse operations, causing excessive voltages in current transformers and relays, causing arcing at gate latches, etc.
System outage.	Undervoltage relays.	Capacitor banks (which may be) energized through a transformer without load on the transformer may need to be switched off before re-energizing the system.
Transmission line tripping (for capacitor banks connected to a transmission line segment).	a) Transfer tripping of the capacitor bank switch, or b) Undervoltage relays.	Capacitor banks directly connected to a transmission line with no connected load may need to be disconnected from the line before reclosing the line.
Breaker failure.	Conventional breaker failure relays.	Local or remote breakers should have capacitor switching capability if they trip the bank without parallel load due to breaker failure considerations.

7.1 Bank protection

In externally fused capacitor banks, several capacitor element breakdowns may occur before the fuse removes the entire unit. The external fuse will operate when a capacitor unit becomes (essentially) short circuited, isolating the faulted unit. Unbalance protection removes the bank from service when the resulting overvoltage becomes excessive on the remaining healthy capacitor units.

Internally fused capacitors have individual capacitor elements within a capacitor unit that are disconnected when an element breakdown occurs. The risk of successive faults is minimized because the fuse will isolate the faulty element within a few cycles. Unbalance protection removes the bank from service when the resulting unbalanced voltage becomes excessive on the remaining healthy capacitor elements or units.

For fuseless or unfused capacitor banks, a failed element is short-circuited by the weld that naturally occurs at the point of failure. Unbalance protection removes the bank from service when the resulting voltage becomes excessive on the remaining healthy capacitor elements or units.

Copyright © 2000 IEEE. All rights reserved.

Copyright The Institute of Electrical and Electronics Engineers, Inc.
Provided by IHS under license with IEEE
No reproduction or networking permitted without license from IHS
Not for Resale

7.1.1 General fuse requirements (for banks with fuses)

The fuse selection should provide sufficient safety margins to ensure the availability of the capacitor banks. The fuses shall be selected to quickly isolate dielectric failures and interrupt the available energy developed at the fault location.

Capacitor fusing requires the careful protection considerations given in 7.1.2 and 7.1.3 for externally and internally fused capacitor banks.

7.1.2 External fuse selection and operation

IEEE Std C37.48-1997 covers in detail the application guidelines for high-voltage external capacitor fuses.

The energy stored in the healthy capacitors of one series group of parallel-connected capacitors will discharge into the failed capacitor unit of that group and its fuse. The fuse shall be able to interrupt the energy supplied by the parallel group of capacitor units when they are charged to their peak voltage.

If the capacitor bank design has an available discharge energy higher than the capacitor units or expulsion fuses can withstand, current-limiting fuses with adequate energy rating should be considered.

When ungrounded wye capacitor banks are supplied in an enclosure, current-limiting fuses shall be used to eliminate the arc products that occur with the use of an expulsion fuse. These arc products in the confined enclosure could cause further evolution of the fault. Current-limiting fuses may also be required on enclosed single-group ungrounded wye banks that are designed with two bushing units. In this design, the first bushing is used for the phase connection, the second bushing used for the neutral connection, and the case connected to ground. This arrangement requires the capacitor fuses to interrupt system fault current in the event of a failure of the unit insulation near the phase bushing.

NEMA CP1-1988 [B11] suggests a parallel energy limit of 15 kJ (4650 kvar) for all film dielectric capacitors. Expulsion fuses are frequently applied with higher parallel energy (to 30 kJ) (Mendis et al. [B9]). This higher energy application is acceptable if the total available discharge energy of the bank does not exceed the discharge energy rating of the fuse or the capability of the faulted capacitor unit.

To determine proper fuse selection, the capacitor unit case rupture curve shall be available from the manufacturer. Case rupture curves are different for different capacitor unit constructions and designs. The total clearing curve of the fuse or fuse link is then compared to the case rupture curve; adequate protection is assured if the total clearing curve of the fuse is to the left of and below the rupture curve of the capacitor unit.

Other important considerations for external fuse selection and operation include the following:

— Fuses should be designed and rated for the externally fused capacitor bank application.
— Fuses should provide for the fast isolation of a faulted capacitor unit.
— Voltage interruption capability of the fuse shall be coordinated with the voltage withstand capability of the capacitor unit.
— Fuses shall handle the transient inrush and outrush current.
— Fuses shall be designed for the current loadability requirements, including harmonics and adequate allowance factors.
— Fuses shall be designed for the inductive and capacitive current interruption capability.
— Fuse characteristics shall coordinate between the different shunt bank protection schemes and the characteristics of the fuses (that is, expulsion, current-limiting, or a combination of both).

Copyright © 2000 IEEE. All rights reserved.
Copyright The Institute of Electrical and Electronics Engineers, Inc.
Provided by IHS under license with IEEE
No reproduction or networking permitted without license from IHS
Not for Resale

7.1.3 Internal fuse operation

The optimum performance of an internally fused capacitor bank relies on the design and selection of fuses. Adequate fuse operation shall be assured in case of capacitor element breakdown. Element fuses in internally fused capacitor banks have current-limiting properties that are mainly dependent on the available fault current, the discharge energy (≅ 1 kJ) from the elements connected in parallel with the faulty element, and the voltage across the faulted element at the instant of failure.

The fuses shall properly isolate the faulted element after fuse operation. Fuses shall be designed with sufficient overvoltage interruption capability to ensure reliable and safe operation under extreme transient element overvoltage conditions, considering both the system transient overvoltage and the unbalance within the capacitor unit resulting from previously blown fuses. Fuse selection shall consider the following:

— Overvoltage interruption capability.
— Transient conditions due to external faults where the fuse shall not operate.
— Inrush and outrush currents over the life of the capacitor units.

The fastest appropriate element fuse that meets the above requirements shall be selected. The remaining healthy fuses in a faulted capacitor unit shall be capable of safely interrupting other internal element failures.

7.1.4 Capacitor unbalance protection

Unbalance protection normally provides the primary protection for arcing faults within a capacitor bank and other abnormalities that may damage capacitor units and or fuses. Arcing faults may cause substantial damage in a small fraction of a second. The unbalance protection should have minimum intentional delay in order to minimize the amount of damage to the bank in the event of external arcing.

Capacitor unbalance protection is provided in many different ways, depending on the capacitor bank arrangement. The variety of unbalance protection schemes that are used for internally fused, externally fused, fuseless, or unfused shunt capacitor banks is illustrated in the figures of Clause 8 along with examples of the required calculations.

Unbalance protection normally senses changes associated with capacitor element or unit failure and/or fuse operation. It is not generally sensitive enough to detect a defective connection. Defective connections may deteriorate until a fault occurs within the capacitor bank, causing the unbalance protection to operate. A defective connection within a capacitor unit (usually a rare occurrence) may result in a pressure buildup and capacitor unit rupture before the operation of the unbalance protection. The unbalance protection should operate quickly for the external arcing following case rupture.

7.1.5 Protection for rack faults (arc-over within the capacitor rack)

With a shunt capacitor bank constructed so that the individual phases are well separated on separate structures, an arc-over within the capacitor bank will begin as an arc-over of a single series group. Such a fault produces very little phase overcurrent. If an unbalance relay protection scheme fails to operate, more and more series groups of the same phase can become involved until the bank overcurrent relays trip the bank or fuses clear. This fault is accompanied by heavy damage to the bank, including many blown fuses and ruptured capacitor units. Instantaneous overcurrent relays are usually not effective for rack faults because of their required high setting.

The most effective protection for an arc-over within the capacitor bank is provided by a fast unbalance relay. A short time delay for the unbalance relays minimizes the damage caused by rack faults. Intentional delays as short as 0.05 s have been used. This short unbalance time delay, however, should not be less than the maximum clearing time of the capacitor-unit or element fuse.

Copyright © 2000 IEEE. All rights reserved.

Copyright The Institute of Electrical and Electronics Engineers, Inc.
Provided by IHS under license with IEEE
No reproduction or networking permitted without license from IHS
Not for Resale

An unusually long unbalance time delay may be required to coordinate with the line relays, unless the unbalance relay scheme is a type that does not respond to (or uses compensation for) system voltage unbalance (zero sequence voltage).

The setting of the unbalance trip relay shall be sensitive enough to protect the capacitor units or elements from continuous overvoltages that result from individual unit or element failure and resultant fuse operation. When set on this basis, the resultant sensitivity is quite adequate to detect the initial rack fault, assuming the initial fault is across one series section of one phase.

Although the unbalance trip relay is the most effective protection for arc detection of a series section, the neutral voltage type of unbalance relay [for instance, see Figure 12(b)] should not be relied upon for rack fault protection on capacitor banks where all three phases are not well separated. For example, consider an ungrounded single wye capacitor bank with two series groups per phase, where all three phases are installed upon a single steel structure. The individual phases are stacked over each other so that the initial fault may occur as a midrack phase-to-phase fault, as shown in Figure 5. This fault does not cause an unbalance of the neutral voltage (or neutral current, if grounded); therefore, a neutral unbalance relay does not respond. The initial fault may spread until it becomes severe enough to operate the time or instantaneous overcurrent relays. However, there may be considerable damage involving all three phases before the bank trips. Methods for protecting a midrack phase-to-phase arcing fault include the following:

— Using a fixed time overcurrent relay set at about 1.35 times normal phase current and using a short time delay (≈ 0.1 s). The overcurrent relay shall have a fast dropout time.

— Using a current unbalance or negative sequence current relay. Negative sequence relays as a backup protection can be set to be more sensitive than phase overcurrent relays, but tripping should be delayed to coordinate with the other relays in the system. A setting of 10% of the rated capacitor current, taking into consideration the maximum system voltage unbalance and the maximum capacitance variation together with a time delay setting of 15–25 cycles, may provide adequate coordination for faults external to the bank. However, it may not prevent damages due to arcing faults within the bank structure.

For wye-wye banks, the unbalance protection will operate for this type of fault, provided the correct groups are bonded to the rack (see 8.2.2).

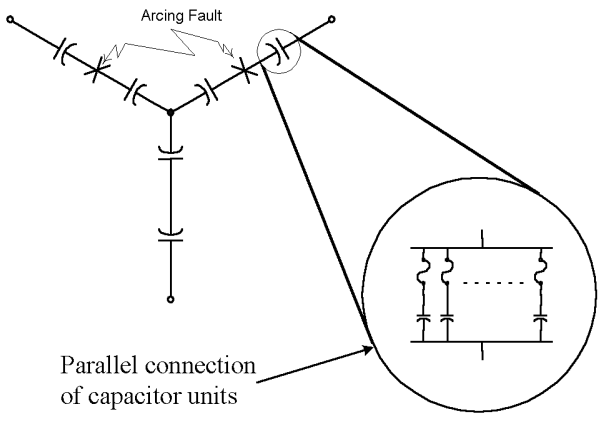

Figure 5—Midrack phase-to-phase arcing fault

Copyright © 2000 IEEE. All rights reserved.
Copyright The Institute of Electrical and Electronics Engineers, Inc.
Provided by IHS under license with IEEE
No reproduction or networking permitted without license from IHS
Not for Resale

7.2 System protection

In order to provide redundancy in the bank protection, system protection may help reduce stresses and minimize damage to capacitors upon the occurrence of the following events:

— External arcing
— Overvoltages, including harmonic distortions
— Bank overcurrent
— Loss of bus voltage
— System overvoltage
— Other considerations (such as loss of voltage transformer fuse, breaker failure protection, and surge arrester protection)

7.2.1 External arcing

External arcing without the prompt operation of the unbalance protection may cause case ruptures or other damage to capacitor units and may blow fuses. It may be desirable to provide the capacitor bank with redundant unbalance protection and/or current unbalance or negative sequence current protection to minimize damage. The overcurrent protection is not normally sensitive to arcing within a capacitor bank and, if it senses a disturbance, is normally too slow.

7.2.2 Overvoltages

The capacitor bank and other equipment in the vicinity may be subjected to overvoltages resulting from abnormal system operating conditions. If the system voltage exceeds the capacitor or equipment capability with the capacitor bank on line, the bank should be removed with minimum time delay. (Removing the capacitor bank from the system lowers the system voltage in the vicinity of the capacitor, reducing the overvoltage on other system elements.)

In some cases, inverse time overvoltage relays may be required to protect the capacitor units from severe system power frequency overvoltage conditions. In this case, a suitable overvoltage relay provided with adequate protection algorithms should be used, set according to the capabilities provided by IEEE Std 1036-1992 or the capacitor manufacturer. If the capacitors are exposed to overvoltages as a result of a combined fundamental and harmonic content, the manufacturer should be asked to provide the peak voltage stress levels as a function of time and temperature. Modern all-film capacitors are affected by crest voltage; therefore, peak overvoltage measuring relays are recommended for this application.

For very large EHV capacitor banks, it is advisable to install three-phase overvoltage relays (59B) to monitor the bus voltage. The 59B relays in Figure 6 may trip the bank quickly for extreme overvoltage conditions. To avoid nuisance tripping during transient overvoltage conditions, in some cases, tripping is delayed by a timer. Because this tripping is not due to a fault within the capacitor bank, the capacitor bank is not locked out.

7.2.3 Bank overcurrent protection

Each time a large grounded wye capacitor bank is energized, momentary capacitor charging currents in one phase and in the neutral may approach the ground fault trip level. Where a parallel bank is already energized, currents can be on the order of thousands of amperes (Abdulrahim et al. [B1]). Spurious relay operations, relay failures, current transformer failures, charged substation fences, and ground mat problems may result. The neutral connection between multiple banks should not be through the ground mat; instead single-point or peninsula grounding should be used.

--`,,```,,,,````-`-`,,`,,`,`,,`---
Copyright © 2000 IEEE. All rights reserved.

Copyright The Institute of Electrical and Electronics Engineers, Inc.
Provided by IHS under license with IEEE
No reproduction or networking permitted without license from IHS
Not for Resale

Protecting the capacitor bank against a major fault, such as a line-to-line fault or a line-to-ground fault, generally requires external protection, such as power fuses, circuit breakers, or circuit switchers with associated relay circuits. For best protection, the relays should be set as low and fast as possible, with only enough delay to avoid tripping on external system disturbances.

Time-overcurrent relays can be applied with normal settings without encountering false operations due to inrush currents. The desirable minimum pickup is 135% of nominal phase current for grounded wye banks or 125% for ungrounded banks. Instantaneous relays, if used, should be set high to override inrush or outrush transients.

Modern relays with fundamental frequency band-pass filters are not susceptible to inrush or outrush currents. Successful operation may be obtained by setting instantaneous relays at three to four times the capacitor rated current (or lower) to override back-to-back bank switching.

In some large capacitor banks, redundant overcurrent devices may protect for short circuits within the capacitor bank. Figure 6 illustrates two sets of three-phase overcurrent relays (50/51) with short-time overcurrent and instantaneous functions. A low burden for this neutral overcurrent relay, 51N, reduces high voltages across current transformer secondaries caused by high-frequency outrush currents from the bank during an external fault.

For ineffectively grounded systems with ungrounded capacitor banks, the neutral overcurrent relay, 51N, should be set to a low tap to detect and to provide fast clearing for ground faults of low magnitudes not detected by phase overcurrent relays.

For effectively grounded systems with grounded wye capacitor banks, the high-frequency outrush current into an external ground fault will not normally operate the 51N ground relay. The unbalanced capacitor bank load current caused by the external ground fault may be sufficient to cause the relay to pick up and trip the capacitor bank if the 51N is set too low. To prevent this inadvertent tripping, the trip of the 51N relay is normally set above the capacitor phase current.

Figure 6 illustrates one unbalance protection scheme in use on large EHV capacitor banks. Other schemes are also in use (for example, midpoint taps, H-bridges, and wye-wye arrangements). Refer to Clause 8 for unbalance protection schemes.

7.2.4 Loss of bus voltage

In some cases, it may be necessary to trip a shunt capacitor bank if the supply bus voltage is lost. Two conditions that may need to be considered are

— Re-energizing a bank with a trapped charge.
— Energizing a capacitor bank without parallel load through a previously unenergized transformer.

Circuit breaker reclosure schemes and capacitor voltage discharging means should be considered to avoid nuisance tripping or equipment damage upon loss of bus voltage with fast reclosing schemes.

Undervoltage relay, device 27B in Figure 6, will detect loss of system voltage and trip the capacitor bank after a time delay. This delay prevents tripping of the bank for system faults external to the bank. The undervoltage relay should be set so that the relay will not operate for voltages that require the capacitor bank to remain in service. Because this tripping, like system overvoltage tripping, is also not due to a fault within the capacitor bank, the bank is not locked out.

Copyright © 2000 IEEE. All rights reserved.
Copyright The Institute of Electrical and Electronics Engineers, Inc.
Provided by IHS under license with IEEE
No reproduction or networking permitted without license from IHS
Not for Resale

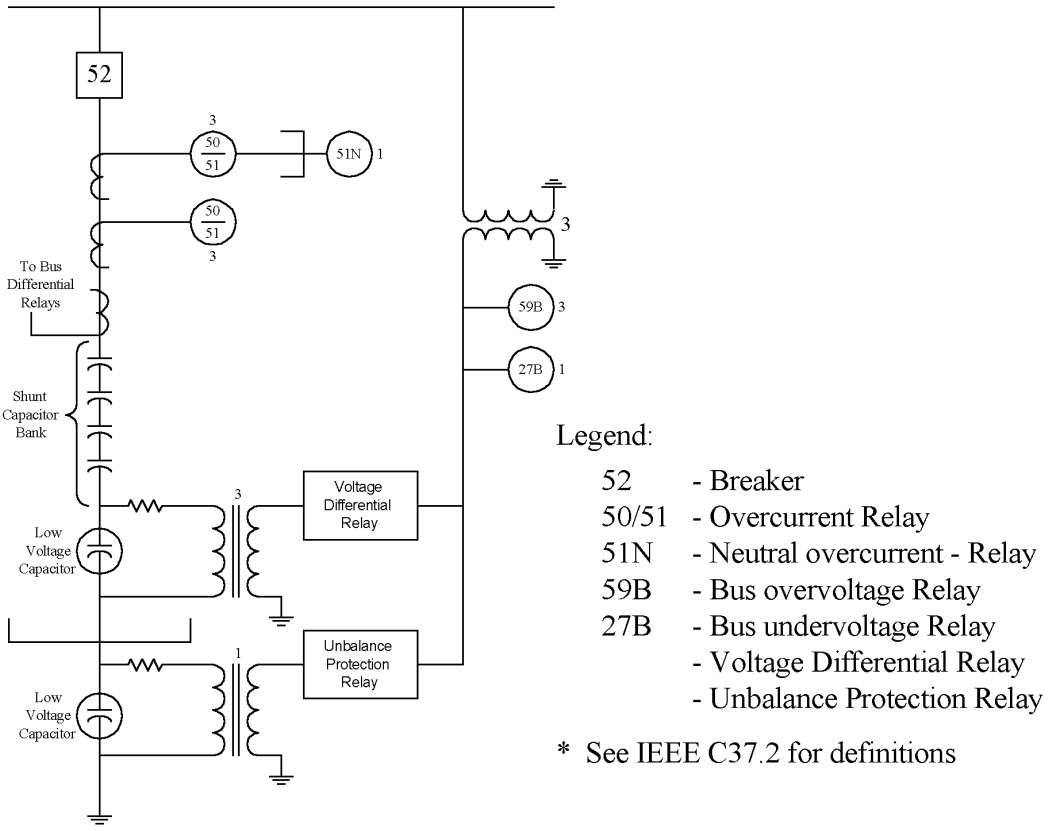

Figure 6—Sample protection scheme for a very large EHV capacitor bank

7.2.5 Fusing for capacitor bank relaying

Many of the protective schemes used on large capacitor banks are sensitive to loss of voltage. For this reason, primary fuses should not be installed on voltage transformers used for this purpose. In addition, the circuit supplying the potential for the protective relays should be brought directly from the voltage transformer to the relay panel with no other connected loads. This arrangement prevents cable voltage drops, especially from varying loads, from affecting the sensitive unbalance protection relays.

When other codes or standards require primary fuses to be installed, the fuse operation shall not cause the loss of protection. A voltage transformer with an open primary circuit may have a high impedance between the secondary terminals, inhibiting relay operation.

Secondary fuses usually do not present a problem because they are sized to protect the cable (usually 30 A) and the unbalance protection will trip before the fuses blow.

7.2.6 Capacitor bank breaker failure protection

If the capacitor switching device is a circuit breaker or a circuit switcher, a breaker failure protection scheme may be incorporated to provide a local backup protection if the switching device fails. If the device does fail, the capacitor bank is isolated from the system by tripping the adjacent breakers connected to the bank after a set time delay. In some cases, remote transfer tripping may be necessary. It is important to verify the capacitance switching capabilities of these adjacent devices for proper operation of the scheme.

--`,,```,,,,````-`-`,,`,,`,`,,`---
Copyright © 2000 IEEE. All rights reserved.

Copyright The Institute of Electrical and Electronics Engineers, Inc.
Provided by IHS under license with IEEE
No reproduction or networking permitted without license from IHS
Not for Resale

The local breaker failure detection logic is initiated by auxiliary relays. Standard breaker failure schemes either have an overcurrent supervision logic to start a timer or have the output of the timer, supervised by overcurrent logic. These overcurrent elements are set to operate for all types of capacitor faults. (Some currents can be less than the nominal rated current.) A phase overcurrent setting of 50% of the capacitor bank normal rated current is generally considered adequate for both grounded and ungrounded banks.

7.2.7 Surge arrester protection

Lightning and switching transient overvoltages may be controlled by using standard overvoltage protection equipment, such as surge arresters. A capacitor bank generally absorbs overvoltages because it acts temporarily as a short circuit for step voltage changes. Overvoltages around capacitor banks are greatly reduced, but complete protection is not assured. The overvoltage on a bank depends upon the length of line between the shunt capacitor bank, the point at which the transient voltage is generated, and the surge duration.

8. Unbalance relaying methods

8.1 Introduction

Unbalance protection utilizes the unbalance that occurs in a normally balanced capacitor bank to detect an abnormality and initiate appropriate action. The most important function is to promptly remove the bank from service for any fault that may result in further damage. An external fault in a capacitor bank is likely to cause extensive damage (cascading failure) and may create a safety hazard if the bank is not tripped quickly. (An external fault in a capacitor bank is a fault within the zone of protection of the unbalance relaying, but external to a capacitor unit, for instance, across an insulator supporting a fuse rail or frame.)

The functions of unbalance relaying are normally to

a) Trip the bank promptly if an unbalance indicates the possible presence of external arcing or a cascading fault within the capacitor bank.
b) Provide early unbalance alarm signal(s) to indicate the operation of fuses (internally or externally fused capacitors) or failure of capacitor elements (fuseless or unfused capacitors).
c) Trip the bank for unbalances that are large enough to indicate that continuing operation may result in
    1) Damage to remaining good capacitor units or elements from overvoltage.
    2) Fuse malfunction.
    3) Inappropriate filter operation (for capacitor banks that are a part of a harmonic filter).
    4) Other undesirable consequences.

Functions a) and c) are frequently combined by setting the trip level based on function c) and with a very short timing based on function a). This scheme works quite well for most applications.

Failure to provide adequate unbalance protection may lead to one or more of the following situations:

— Excessive damage to the capacitor bank.
— Adverse system effects.
— Spread of damage to adjacent equipment.
— Excessive period when the damaged equipment is unavailable.
— Possible case rupture and undesirable discharge of dielectric liquid and/or fire.

Unbalance protection systems do not operate fast enough to avoid catastrophic failure due to high system short-circuit currents within capacitor units. Single series group grounded wye capacitor banks or capacitor banks with grounded capacitor unit cases may have system short-circuit current for a single fault within a capacitor unit. External fusing may be desirable to avoid major damage for these banks.

--`,,```,,,,````-`-`,,`,,`,`,,`---

Copyright © 2000 IEEE. All rights reserved.
Copyright The Institute of Electrical and Electronics Engineers, Inc.
Provided by IHS under license with IEEE
No reproduction or networking permitted without license from IHS
Not for Resale

Most installations will require an individual engineering analysis to determine the most appropriate protection scheme. Bank design, fuse coordination, and selection of a sensing device will directly affect sensitivity and the delay time requirements of the protection scheme. Selection of the bank configuration and design should include an analysis of the amount of inherent unbalance that can be expected and tolerated by the protection.

Unbalance protection normally senses changes associated with capacitor element or unit failure and/or fuse operation. It is not generally sensitive enough to detect a defective connection. Defective connections may deteriorate until a fault occurs within the capacitor bank, causing the unbalance protection to operate. A defective connection within a capacitor unit (usually a rare occurrence) may result in a pressure buildup and capacitor unit rupture before the operation of the unbalance protection. The unbalance protection should operate quickly for the external arcing following case rupture.

8.2 General unbalance relay considerations

The unbalance relays should be set on the basis of maximum continuous system operating voltage.

8.2.1 Schemes with ambiguous indication

Ambiguous indications may come from two or more different conditions of the bank, but provide the same indication. For instance, negligible current may flow through the current transformer between the neutrals of an ungrounded wye-wye capacitor bank for a balanced bank, and this condition is desirable. However, the same negligible current may flow through this current transformer if an equal number of units or elements are removed from the same phase on both sides of the bank. This condition is undesirable, and the indication is obviously ambiguous.

Where ambiguous indication is a possibility, it is desirable to have a sensitive alarm (preferably one fuse operation for fused banks or one faulted element for fuseless or unfused banks) to minimize the probability of continuing operation with canceling failures that result in continuing, undetected overvoltages on the remaining units.

It may also be desirable to set the trip level based on an estimated number of canceling failures in order to reduce the risk of subjecting capacitor units to damaging voltages and requiring fuses to operate above their voltage capability when canceling failures occur.

Common schemes with ambiguous indication are as follows:

— In wye-wye banks (see Figure 7), the operation of fuses or short-circuiting of elements in one wye may cancel the unbalance signal generated in the other wye.

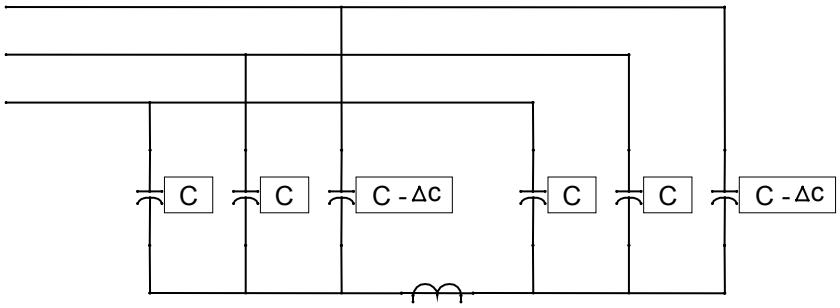

Figure 7—Wye-wye: Compensating failures result in no unbalance signal even though the bank is unbalanced

Copyright © 2000 IEEE. All rights reserved.

Copyright The Institute of Electrical and Electronics Engineers, Inc.
Provided by IHS under license with IEEE
No reproduction or networking permitted without license from IHS
Not for Resale

— In H-bridge banks (see Figure 8), the operation of fuses or short-circuiting of elements in one leg of the H may cancel the unbalance signal generated in another leg of the H.

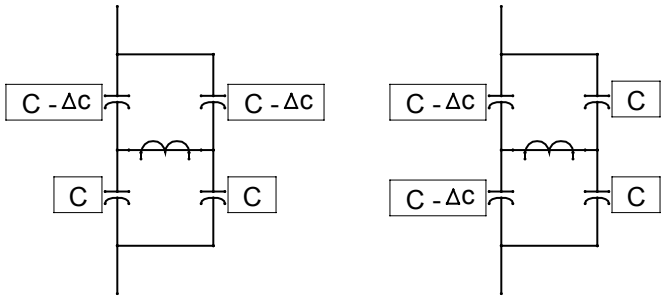

Figure 8—H-bridge: Compensating failures results in no unbalance signal even though the bank may be unbalanced

— In midpoint-tapped banks (see Figure 9), the operation of fuses or short-circuiting of elements above the tap point may cancel the unbalance signal generated below the tap point.

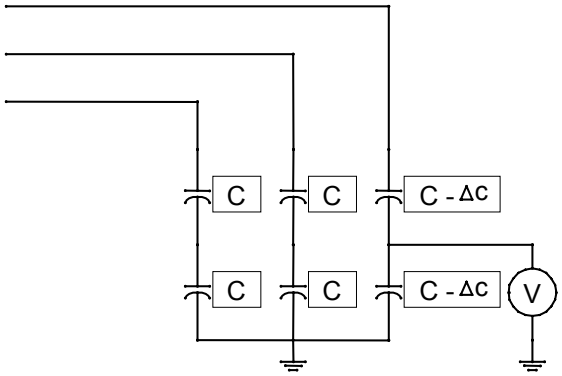

Figure 9—Midpoint taps: Compensating failures result in no unbalance signal even though the bank may be unbalanced

8.2.2 Undetectable failure modes

For certain capacitor bank configurations, some faults within the bank will not cause an unbalance signal, such as

— Rack-to-rack faults for banks with two series groups connected phase-over-phase and using neutral voltage or current for unbalance protection.

— Rack-to-rack faults for certain H-bridge connections.

Refer to 7.1.5 for a discussion of these conditions.

For phase-over-phase wye-wye and H-bridge banks, correct bonding of the racks is required in order that the unbalance protection will be responsive to rack-to-rack flashovers. See Figure 10 for an illustration of the bonding for a wye-wye bank.

Copyright © 2000 IEEE. All rights reserved.
Copyright The Institute of Electrical and Electronics Engineers, Inc.
Provided by IHS under license with IEEE
No reproduction or networking permitted without license from IHS
Not for Resale

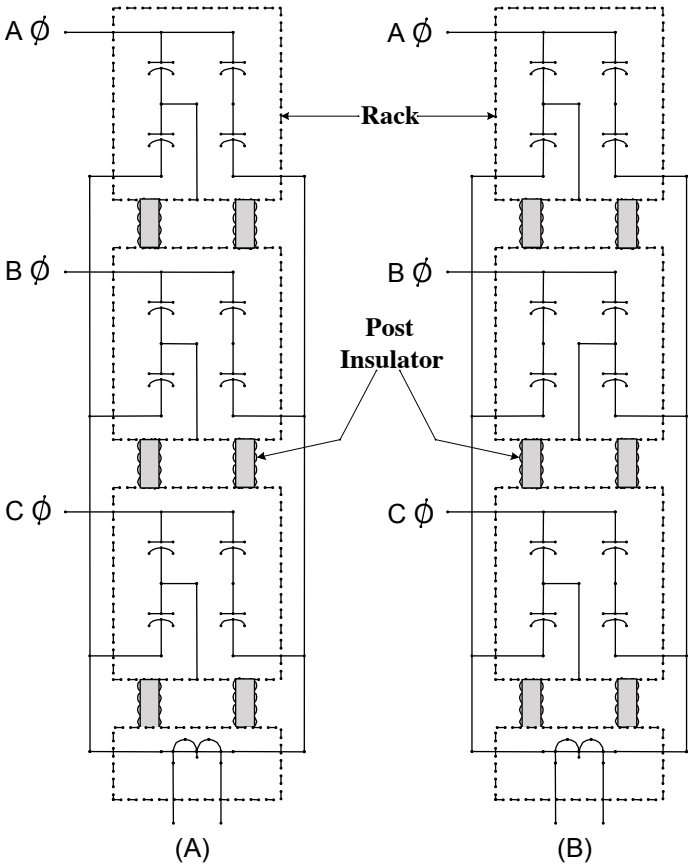

(A) Incorrect rack bonding (all on same side); no neutral current through the current transformer for a rack-to-rack insulator flashover
(B) Correct rack bonding (on alternate sides); neutral current will flow though a current transformer for a rack-to-rack insulator flashover

NOTE—Bonding is similar for a grounded wye-wye bank for a phase-over-phase design.

Figure 10—Bonding of the frames of an ungrounded wye-wye bank

8.2.3 Inherent unbalance, system unbalance, and other sources of error

a) In practice, the unbalance seen by the unbalance relay, due to loss of individual capacitor units or elements, is somewhat different from the calculated value because of inherent unbalance. The primary unbalance, which exists on all capacitor bank installations (with or without fuses), is due to system voltage unbalance and capacitor manufacturing tolerance. Secondary unbalance errors may be introduced by sensing device tolerance and variation and by relative changes in capacitance due to difference in capacitor unit temperatures in the bank.

The total inherent unbalance error will be a vectorial combination of the primary and secondary effects. The error may be in a direction to prevent unbalance relay operation, or to cause a false operation. The amount of inherent unbalance for various configurations may be estimated using equations in Annex C. A worst-case estimate can be made by assuming the unbalance errors to be additive.

If the inherent unbalance error approaches 50% of the alarm setting, compensation should be provided in order to correctly alarm for the failure of one unit or element as specified. In some cases, a different bank connection can improve the sensitivity without adding compensation.

Copyright © 2000 IEEE. All rights reserved.

Copyright The Institute of Electrical and Electronics Engineers, Inc.
Provided by IHS under license with IEEE
No reproduction or networking permitted without license from IHS
Not for Resale

For example, a wye bank can be split into a wye-wye bank, thereby doubling the sensitivity of the protection and eliminating the system voltage unbalance effect.

b) Where unbalance due to system variations or capacitor manufacturing tolerances is not negligible, a compensating means should be provided to negate the effect of this unbalance. Careful consideration of bank design may also remedy the problem. Before attempting any adjustments to the compensation circuits, the load current of each phase and the capacitance (or load current) of each capacitor should be checked for indication of failure of a single capacitor element within the capacitor unit. The unbalance relay should be set taking the total unbalance into account.

To compensate for the resulting total unbalance, the unbalance relay system may nullify the inherent capacitor bank and system unbalance. Figure 11 illustrates an arrangement for unbalance compensation where the neutral unbalance relay can be made to nullify the unbalances. The inherent unbalance still exists, but the relay is no longer responsive to this unbalance component.

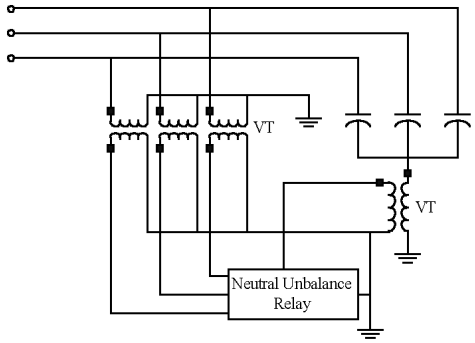

Figure 11—Neutral voltage unbalance protection method

A neutral unbalance protection method with compensation for inherent unbalance is normally required for very large banks. The neutral unbalance signal due to the loss of one or two individual capacitor units is such that the inherent unbalance can no longer be considered negligible. Unbalance compensation should be used if the inherent unbalance exceeds one half of the desired setting.

c) Harmonic voltages and currents can influence the operation of the unbalance relay unless power frequency band-pass or other appropriate filtering is provided.

d) For compensation of system voltage unbalance on single ungrounded banks, the voltage appearing at the capacitor bank neutral due to system unbalance is the zero sequence component. An equivalent zero sequence component can be derived utilizing three voltage-sensing devices with their high side wye-connected from line to ground, and the secondaries connected in a broken delta. Often, the voltage transformers are already available for station relaying, with the exception of low-voltage isolation transformers to derive the broken delta. The difference voltage between the neutral unbalance signal due to system unbalance and the broken delta output of the voltage transformers is then adjusted to zero. Once this adjustment is made, the effect of system voltage unbalance will be compensated for all conditions of system unbalance. A compensating circuit will compensate for the remaining error appearing at the neutral due to manufacturer's capacitor tolerance.

8.2.4 Unbalance trip relay considerations

a) The unbalance trip relay time delay should be minimized to reduce damage from an arcing fault within the bank structure and prevent exposure of the remaining capacitor units to overvoltage conditions beyond their permissible limits. For a single-phase or an open-phase condition, the time delay should also be short enough to avoid damage to the current transformer or voltage transformer and to the relay system.

b) The unbalance trip relay should have enough time delay to avoid false operations due to inrush, system ground faults, switching of nearby equipment, and nonsimultaneous pole operation of the energizing switch. For most applications, 0.1 s should be adequate. For unbalance relaying systems

Copyright © 2000 IEEE. All rights reserved.
Copyright The Institute of Electrical and Electronics Engineers, Inc.
Provided by IHS under license with IEEE
No reproduction or networking permitted without license from IHS
Not for Resale

that operate on a system voltage unbalance (ground fault), a delay slightly longer than the upstream protection fault clearing time is required to avoid tripping due to a system fault. Longer delays increase the probability of catastrophic bank failure.

c) With grounded capacitor banks, the failure of one pole of the switching device or the single phasing from a blown bank fuse will allow zero sequence currents to flow in system ground relays. Capacitor bank relaying, including the operating time of the switching device, should be coordinated with the operation of the system ground relays to avoid tripping system load.

d) The unbalance trip relay may need to be delayed to account for the settling time of the protection system on initial energization and for the transient response of certain capacitor voltage transformers, etc., which may be a part of the unbalance protection system.

e) The unbalance trip relay scheme should have a lockout feature to prevent inadvertent closing of the capacitor bank switching device if an unbalance trip has occurred.

f) To allow for the effects of inherent unbalance, the unbalance relay trip should be set to operate at a signal level halfway between the critical step and the next lower step. The critical step is the number of fuse operations or shorted elements that will cause an overvoltage on healthy capacitor units in excess of 110% of the capacitor unit rated voltage or the capacitor unit manufacturer's recommended maximum continuous operating voltage. In addition, for internally fused capacitor units, the critical step may be the number of internal fuse operations at which tripping should occur as recommended by the capacitor manufacturer.

g) If switch failure or single phasing due to a blown main fuse could result in continuous voltage exceeding the relay rating, operation of the lockout relay should de-energize the voltage relay. If chattering of the seal-in unit is a problem when used on ac, a lockout relay contact can bypass the voltage relay contact.

h) The neutral unbalance voltage trip relay and current transformer loading resistor should usually be set to operate when the voltage across any capacitor element, unit, or fuse becomes unacceptably high. The unbalance relay detects only the unbalance in the capacitor bank and in supply voltage and will not respond to capacitor overvoltage due to a balanced system voltage above nominal. The maximum system operating voltage, with capacitor bank energized, should be used for setting unbalance relays.

8.2.5 Unbalance alarm relay considerations

To allow for the effects of inherent unbalance within the bank, the unbalance relay alarm should be set to operate at about one-half the level of the unbalance signal determined by the calculated alarm condition based on an idealized bank. The alarm should have sufficient time delay to override external disturbances.

8.2.6 Comments on various protection schemes

8.2.6.1 Neutral voltage unbalance protection method for ungrounded wye banks

The voltage-sensing device may be a voltage transformer, capacitive potential device, or resistive potential device. The voltage-sensing device should be selected for the lowest voltage ratio attainable, while still being able to withstand transient and continuous overvoltage conditions to obtain the maximum unbalance detection sensitivity. However, a voltage transformer used in this application should be rated for full system voltage because the neutral voltage can under some conditions rise to as high as 2.5 per unit during switching. Under these conditions, a derated voltage transformer will be driven into deep saturation (Harner and Owen [B6]).

The use of an underrated resistance potential device, with secondary voltage limiter, can permit relay operation with an open phase to the capacitor bank. The resistive potential device should be capable of withstanding this overvoltage condition.

--`,,```,,,,````-`-`,,`,,`,`,,`---
Copyright © 2000 IEEE. All rights reserved.

Copyright The Institute of Electrical and Electronics Engineers, Inc.
Provided by IHS under license with IEEE
No reproduction or networking permitted without license from IHS
Not for Resale

Figure 12(a) shows a neutral unbalance relay protection scheme for an ungrounded wye capacitor bank using three line-to-neutral voltage transformers with their secondaries connected in broken delta to an overvoltage relay. Compared to the scheme in Figure 12(b), this scheme has the advantage of not being sensitive to system voltage unbalance. Also, the unbalance voltage to the overvoltage relay is three times the neutral shift voltage as obtained from Figure 12(b). For the same voltage transformer ratio, there is a gain of three in sensitivity over the single neutral-to-ground voltage transformer scheme. The voltage transformers should be rated for line-to-line voltage.

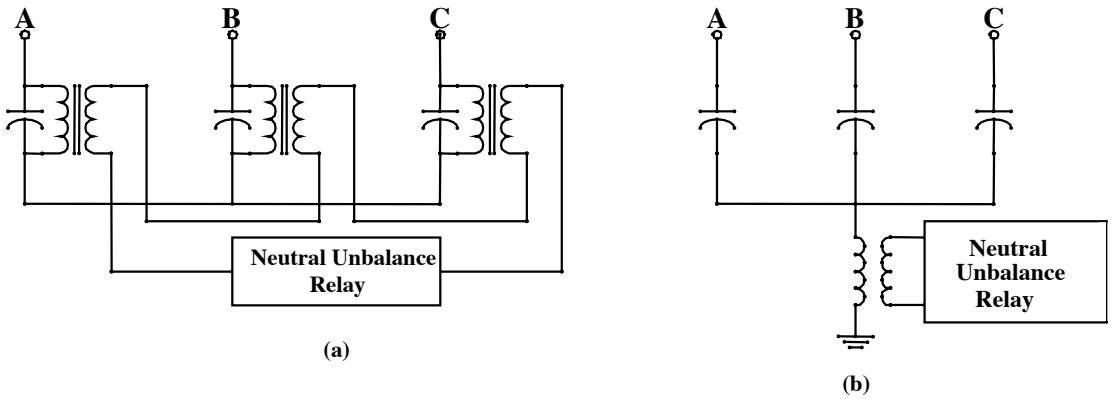

(a) Broken delta scheme
(b) Neutral-to-ground protection scheme

Figure 12—Unbalance measurements

8.2.6.2 Double wye unbalance protection method

Four methods of providing unbalance protection for double wye banks are illustrated in Figure 13.

In Figure 13, scheme (a) and scheme (b) (for ungrounded wye banks), use either a current transformer and overcurrent relay (or a shunt and a voltage relay) or a voltage transformer and overvoltage relay connected between the two neutrals. The effects of system voltage unbalances are avoided by both schemes, and both are unaffected by third harmonic currents or voltages when balanced. The current transformer or voltage transformer should be rated for system voltage.

The neutral current is one-half that of a single grounded bank of the same size. However, the current transformer ratio and relay rating may be selected for the desired sensitivity because they are not subjected to switching surge currents or single-phase load currents as they are with the grounded neutral scheme.

The neutral voltage shift can be determined in the same manner as for a single wye bank of the same rating as one section of the double wye bank. Although a low-ratio voltage transformer would be desirable, a voltage transformer rated for system voltage is required for the ungrounded neutral. Therefore, a high turns ratio should be accepted. The resulting unbalance signal voltage may be very small.

Ungrounded banks can be split into two equal banks. This bank configuration inherently compensates for system voltage unbalances because the neutral current or voltages are sensed differentially. However, the effects of manufacturer's capacitor tolerance will affect relay operation unless steps are taken to compensate for this error. The equations in Annex C may be used to estimate the possible effect of the inherent unbalance of the capacitor bank. Refer also to 8.2.3 for information on compensation of unbalance.

In scheme (c) in Figure 13 (for grounded wye banks), the neutrals of the two sections are grounded through separate current transformers to a common ground. The current transformer secondaries are cross-connected to an overcurrent relay so that the relay is insensitive to any outside condition that affects both sections of the capacitor bank in the same manner. The current transformers can be subjected to switching transient currents

--`,,```,,,,````-`-`,,`,,`,`,,`---

Copyright © 2000 IEEE. All rights reserved.
Copyright The Institute of Electrical and Electronics Engineers, Inc.
Provided by IHS under license with IEEE
No reproduction or networking permitted without license from IHS
Not for Resale

and, therefore, require surge protection. They should be sized for single-phase load currents if possible. (Alternatively, the connections from neutral to ground from the two wyes may be in opposite directions through a single-window current transformer.)

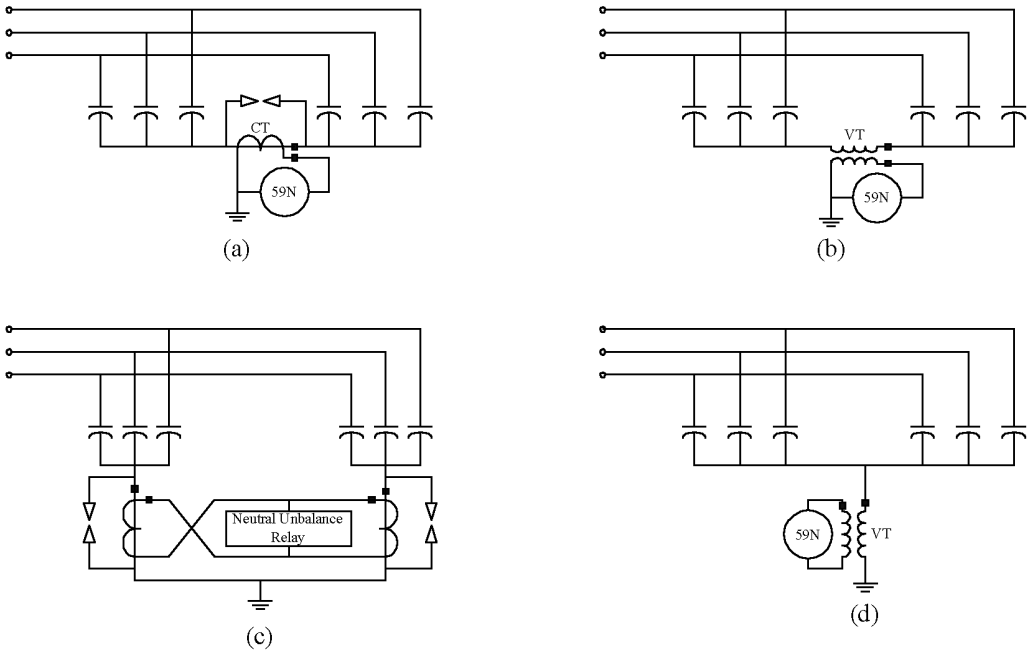

(a) Neutral current unbalance detection method (ungrounded)
(b) Neutral voltage unbalance protection method (ungrounded) (neutrals isolated)
(c) Neutral current differential protection method (grounded)
(d) Neutral voltage unbalance protection method (ungrounded) (neutrals tied together)

Figure 13—Shunt capacitor bank protection methods on double wye-connected banks

In scheme (d) in Figure 13 (for ungrounded wye banks), the neutrals of the two capacitor sections are ungrounded, but tied together. A voltage transformer, or potential device, is used to measure the voltage (shift) between the capacitor bank neutral and ground. The relay should have a harmonic filter.

8.2.6.3 Voltage differential protection method for grounded wye banks

Means of compensation for system and inherent capacitor bank unbalance in grounded wye capacitor banks are illustrated in Figure 14(a) for a single wye-connected bank and Figure 14(b) for a double wye-connected bank. This approach is, in essence, three single-phase voltage differential relays for each bank, as applicable.

A signal responsive to the loss of individual capacitor elements or units is derived by comparing capacitor bank tap voltage with the bus voltage. The capacitor bank tap voltage is obtained by connecting a voltage-sensing device across the ground end parallel group (or groups) of capacitors. This may be a midpoint tap, where the voltage is measured between the midpoint of the phase and ground. Alternatively, the tap voltage may be measured across low-voltage capacitors (that is, a capacitive shunt) at the neutral end of the phase. The bus voltage is usually available.

After checking that all capacitors are good and no fuses have operated, the voltage levels are initially adjusted to be equal. The initial difference signal between the capacitor bank tap voltage and the bus voltage signals is zero, and the capacitor tolerance and initial system voltage unbalance is compensated. If the system voltage unbalance should vary, the relay system is still compensated because a given percent change in bus voltage results in the same percent change on the capacitor bank tap. Any subsequent voltage difference

Copyright © 2000 IEEE. All rights reserved.

Copyright The Institute of Electrical and Electronics Engineers, Inc.
Provided by IHS under license with IEEE
No reproduction or networking permitted without license from IHS
Not for Resale

between capacitor tap voltage and bus voltage will be due to unbalances caused by loss of capacitor units within that particular phase. Secondary errors may be introduced by sensing device variation and temperature differences between capacitor units within the bank. Loss of capacitor units in each phase is detected independently (Alexander [B2] and Tom [B15]).

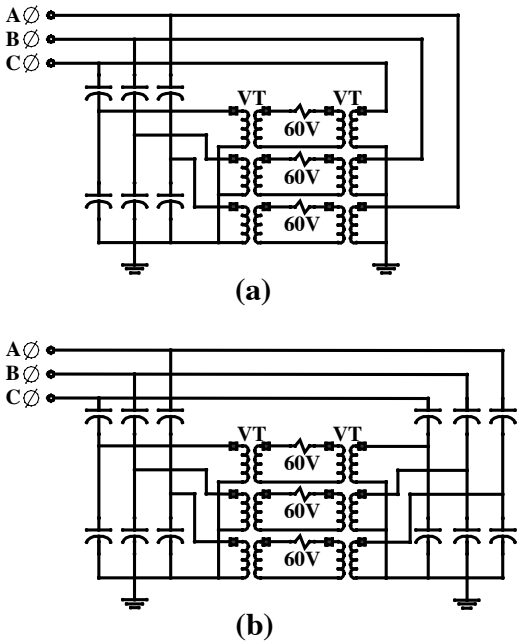

(a) Grounded single wye-connected capacitor bank
(b) Grounded double wye-connected capacitor bank

Figure 14—Voltage difference protection methods

The sensitivity of this method is high and it is particularly well suited for high-voltage banks or banks that consist of a large number of capacitor units.

If the bank is tapped at the midpoint, the sensitivity is the same for failures within and outside the tapped portion. If the bank is tapped below (above) the midpoint, the sensitivity for failures within the tapped portion will be greater (less) than for failures outside the tap portion. This difference may cause difficulty in achieving an appropriate relay setting. The sensitivity for a midpoint tap and a tap across low-voltage capacitors at the neutral end of the phase is the same.

Tapping across the bottom series groups or a midpoint tap is not appropriate for fuseless banks with multiple strings because the strings are not connected to each other at the tap point. Tapping across the low-voltage capacitors is suitable for fuseless capacitor banks.

8.2.6.4 Neutral current unbalance protection method for grounded wye banks

The protection is based on a current transformer connected between the capacitor bank neutral and ground. The current transformer output can be put through a burden resistor. A sensitive voltage relay with a fundamental band-pass filter should be used for the unbalance protection.

This current transformer has unusual overvoltage and current requirements (Harder [B5]). See 10.5 and 10.6. The ratio is selected to give both adequate overcurrent capability and appropriate signal for protection.

Copyright © 2000 IEEE. All rights reserved.
Copyright The Institute of Electrical and Electronics Engineers, Inc.
Provided by IHS under license with IEEE
No reproduction or networking permitted without license from IHS
Not for Resale

Because of the presence of harmonic currents (particularly the third, a zero sequence harmonic that flows in the neutral-to-ground connection), the relay should be tuned to reduce its sensitivity to frequencies other than the power frequency.

The voltage across the burden resistor is in phase with the neutral-to-ground current This neutral-to-ground current is the vector sum of the three-phase currents, which are 90° out of phase with the system phase-to-ground voltages. This scheme may be compensated for power system voltage unbalances, by accounting for the 90° phase shift, and is not usually appropriate for very large capacitor banks requiring very sensitive settings.

Some schemes have the logic where the voltage relay operates a latching or lockout relay to initiate the opening of the capacitor switch and to block its closing. Contacts of the lockout relay should also short out the neutral current transformer secondary.

8.2.7 Very large capacitor banks

Very large grounded wye-connected capacitor banks (i.e., at voltages of 345 kV and above) have created the need for a protective device sensitive enough to detect the loss of a single capacitor unit in externally fused banks or loss of a few elements in internally fused or fuseless banks. The voltage differential relay in Figure 6 compares voltages on secondaries of voltage transformers connected to the capacitor bank's tap point and the bus. A capacitor bank's tap point connection depends on the type and configuration of the bank, as shown in Figure 6. In the case of many capacitor banks (for example, externally fused, internally fused, and fuseless banks), low-voltage protection capacitors are used, as shown in Figure 6. Resistors may be used in series with voltage transformers to avoid ferroresonance problems. In many externally fused banks, the voltage transformer in each phase is connected across one or more series groups depending on the sensitivity requirement.

For very large EHV capacitor banks, a backup (redundant) capacitor bank neutral voltage unbalance protection scheme is generally provided. The unbalance protection relay in Figure 6 is connected to a voltage transformer that measures the voltage across a low-voltage capacitor unit in the capacitor bank neutral. The unbalance relay is set to detect the loss of a specified number of capacitor units or elements depending on the type of the capacitor bank. The relay is set to trip after a time delay if overvoltage greater than allowable levels occurs on the remaining units or elements. Relay criterion is described in detail in 8.2 through 8.6. Relay setting philosophies may differ from one application to another. However, a short time delay should be provided to prevent nuisance tripping (of a capacitor bank in an alarm state) on a system overvoltage transient.

The overvoltage relay mentioned above should be equipped with a fundamental frequency band-pass filter to avoid false operations due to harmonic currents. A third harmonic blocking filter may not prevent all false operations of this relay.

Some relays provide compensation schemes to overcome the effects of system unbalance on sensitivity. In this regard, the neutral voltage is compared either with the open delta voltage on the bus voltage transformer in grounded wye-connected banks or with voltage across another low-voltage capacitor (not shown in Figure 6) in case of double wye-connected banks.

8.2.8 Protection of unbalance relays

a) The unbalance relay should be protected against damaging transient voltages appearing on control wiring (see IEEE Std C37.90.1-1989).
b) To prevent protective equipment damage if a switching device fails, the latching or lockout relay should have contacts wired to short out the neutral current transformer secondary after the relay has operated. A current transformer loading resistor, if used, should be able to withstand rapid heating in the event of single phasing until the unbalance protection voltage relay and lockout relay operate.

Copyright © 2000 IEEE. All rights reserved.

Copyright The Institute of Electrical and Electronics Engineers, Inc.
Provided by IHS under license with IEEE
No reproduction or networking permitted without license from IHS
Not for Resale

8.2.9 Current transformers for unbalance relaying

Current transformers used to measure neutral current may be subject to damaging high-voltage transients associated with capacitor switching or capacitor discharge into nearby faults and may require special protection. Current transformers installed neutral to ground for unbalance protection are particularly vulnerable because of the sensitivity requirements. If metal oxide varistors (MOVs) are used to protect the current transformers or relays, care should be taken to ensure that the MOVs have adequate energy-absorbing capability. A capacitor switching or fault transient may have very high energy. A shorted MOV may disable the unbalance protection (Harder [B5]). See 10.5 for additional comments.

8.3 Externally fused capacitor banks

8.3.1 General considerations

The unbalance relay should coordinate with the individual capacitor unit fuses so that the fuses operate to isolate a defective capacitor unit before the protection switches the bank out of service. [Reliable fuse operation provides a convenient, visual means for locating the defective capacitor unit(s).]

Where possible, the unbalance relay should be sensitive enough to alarm for the loss of one unit within a group. It should also trip and lock out on the loss of additional capacitor units that cause a group overvoltage in excess of 110% of capacitor unit rated voltage (or the capacitor unit manufacturer's recommendation).

8.3.2 Using the calculated values

The trip level is based on protecting the capacitor units and fuses from excessive voltages. The alarm level is based on providing an early indication of failures within the bank.

The number of blown fuses for trip can be determined by knowing the voltage on the capacitor units in parallel with the blown fuses (Vcu) (for instance, the second column from right in Figure 16 or the second column from left in Figure 17) and the capability of the units based either on industry standards or the documentation provided by the manufacturer. In the example calculated in Figure 16 and Figure 17, for standard units applied at rated voltage with a continuous contingency overvoltage capability of 110%, tripping should occur following the operation of the first fuse. At this point, the voltage on the capacitor units in parallel with the blown fuses is greater than 111% (above the 110% overvoltage capability).

Normally a bank this size would be built single wye with 14 units in parallel in each series group. (The uneven double wye is used only to illustrate the technique.) This arrangement would result in less than 110% voltage on parallel units following the operation of the first fuse. Alternatively, the bank might be made of slightly higher voltage units so that the resulting overvoltage would not be above 110% following the operation of the first fuse.

The trip level would be normally set to operate reliably following the operation of the fuse that results in more than 110% of capacitor unit rated voltage on parallel units. The relay may be set midway between the unbalance signal with that fuse having operated and the unbalance signal with one less fuse having operated. (Alternatively, the trip relay could be set at an unbalance that would result in 110% of capacitor unit rated voltage on the remaining elements, regardless of whether this condition could be anticipated in service.)

The alarm would normally be set to operate reliably on the operation of the first fuse. This alarm set point would typically be 50% to 75% of the signal associated with one fuse having operated.

The actual unbalance signal will depend upon the protection scheme employed for the bank. A wide variety of protection schemes are in use on externally fused shunt capacitor banks. Sample calculations of unbalance

Copyright © 2000 IEEE. All rights reserved.
Copyright The Institute of Electrical and Electronics Engineers, Inc.
Provided by IHS under license with IEEE
No reproduction or networking permitted without license from IHS
Not for Resale

signals for some of the protection schemes are given in Figure 16 and Figure 17. Other calculated values are given in 8.3.5 and 8.3.6 under separate discussions of tap voltage and H-bridge protection schemes.

8.3.3 Introduction to capacitor bank unbalance calculations

The sample calculations in 8.3.4 through 8.3.6 are in three groups

a) Wye, delta, and single-phase (see 8.3.4 for discussion, Figure 15 for bank diagram, and Figure 16 and Figure 17 for tabulated calculations). These calculations provide the information required for setting the unbalance protection based on the following:
   1) Neutral-to-ground voltage for ungrounded wye banks.
   2) Neutral current for ungrounded wye-wye banks.
   3) Neutral voltage difference for ungrounded wye-wye banks.
   4) Neutral-to-ground current for grounded wye banks.
   5) Voltage across low-voltage capacitors at the neutral end of each phase or in the neutral-to-ground connection of grounded wye banks.
   6) Difference in neutral-to-ground currents for grounded wye-wye banks.
   7) Delta and single-phase bank protection based on schemes similar to a) 1) through a) 6).

b) Tap voltage protection schemes (see 8.3.5 for discussion, Figure 19 for bank diagram, and Figure 20 for tabulated calculations). These calculations provide the information required for setting the unbalance protection based on the following:
   1) “Midpoint”-to-ground tap voltages for grounded wye banks.
   2) “Differential” protection for comparing the voltage across one or more series groups with the system line-to-ground voltage for grounded wye banks.
   3) Delta and single-phase bank protection based on schemes similar to b) 1) and b) 2).

c) H-bridge protection schemes (see 8.3.6 for discussion, Figure 21 for bank diagram, and Figure 22 for tabulated calculations). These calculations provide the information required for setting the unbalance protection based on the current between midpoints of two similar legs connected phase to neutral or ground, phase to phase, or in the phase (series capacitors).

The system of units used for most of these calculations assumes every normal non-zero voltage, capacitance, and current is 1 per unit under normal conditions, with no fuses having operated.

Some of the examples are not realistic. For instance, for high-voltage banks with several series groups, it is desirable to have at least 10 parallel capacitor units in each series group so that voltage is not excessive on the remaining capacitor units in a group following the operation of one fuse. Also, having many parallel units gives substantial overcurrent for fast fuse operation on a faulted unit. Fewer parallel units have been used in some of the examples in this clause in order to keep the diagrams simple enough to read.

In addition to providing the necessary information for protective relay settings, this type of tabulation gives a good feel for the performance of the bank with varying numbers of fuses having operated.

For specific bank configurations it is possible to combine the calculations of the various columns and calculate only

— The current through the fuse on a shorted capacitor unit.
— The voltage on the capacitor units in parallel with blown fuses.
— The unbalance signals for the type of protection to be utilized.

Copyright © 2000 IEEE. All rights reserved.

Copyright The Institute of Electrical and Electronics Engineers, Inc.
Provided by IHS under license with IEEE
No reproduction or networking permitted without license from IHS
Not for Resale

For some cases, because of the complexity of the configuration, the resulting equations become onerous. The layout of the tabulated calculations in 8.3.4 through 8.3.6 is general and allows for the analysis of a wide variety of capacitor bank configurations.

Tabulations like those illustrated in 8.3.4 through 8.3.6 have been helpful in understanding the performance of a proposed bank before purchase. In addition, a copy of the tabulation at the capacitor bank location can be helpful for those concerned with the future maintenance of the bank. Some manufacturers of capacitor banks may provide this type of tabulation for the banks they propose or supply.

8.3.4 Unbalance calculations—wye, delta, and single-phase

Step-by-step calculations for the capacitor bank of Figure 15 are illustrated in the tabulations of Figure 16 and Figure 17. In these spreadsheets, the values for the "Capacitor Bank Construction" are entered into the spreadsheet of Figure 16, and automatically copied to the spreadsheet of Figure 17.

The principal equation for each column of Figure 16 and Figure 17 is given in Table 2 and Table 3. [Some equations for the conditions where a capacitor unit has faulted, but the fuse has not yet blown (SU), are different from the equations in the tables. Also for cases where the equations shown in the tables result in dividing by zero, different equations are used. Some of these equations for unusual conditions are not given in the tables.]

These tabulations illustrate the unbalance that occurs in the affected parts of this bank as a result of individual fuse operations.

The column headings in the tabulations are based on wye-connected three-phase capacitor banks. For delta-connected banks, the same formulae and tabulation(s) can be used by treating a leg of the delta as one phase of a grounded wye bank; all of the formulae are identical. For a delta bank, the currents shown as per-unit-of-phase current become per-unit-of-leg current (phase current divided by $\sqrt{3}$). The difference current (equal wyes) becomes the difference in current between two equal delta-connected legs.

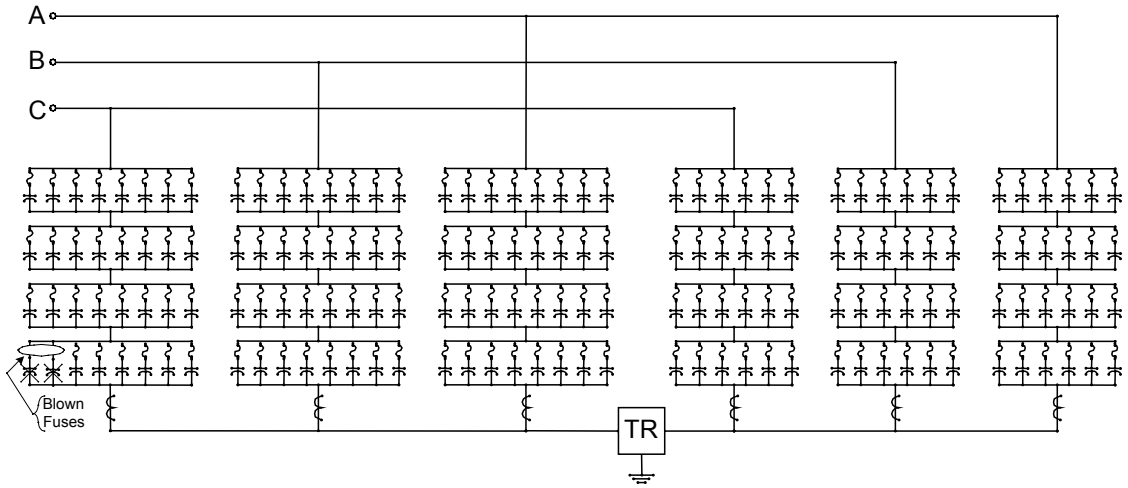

S = 4 series groups line to neutral,
n = 2 blown fuses,
Pt = 14 parallel units per phase,
Pa = 8 parallel units per phase in left wye,
G = ? (0 = grounded; 1 = ungrounded).

TR is a current transformer on an ungrounded wye-wye bank; a resistor potential device, capacitor voltage transformer, or voltage transformer on an ungrounded single wye bank; a current transformer or low-voltage capacitor (capacitor shunt) on a grounded wye bank; etc.

Figure 15—Illustration of an uneven double wye-connected capacitor bank

Copyright © 2000 IEEE. All rights reserved.
Copyright The Institute of Electrical and Electronics Engineers, Inc.
Provided by IHS under license with IEEE
No reproduction or networking permitted without license from IHS
Not for Resale

Externally fused capacitors, wye connected banks

(Values are per unit of normal value except as indicated. Calculations and notation based on wye connected banks.)

10-Jul-97
09:15 AM

EFCPBK2.WK4
"Unit and Bank"

Capacitor Bank Construction

S =	4	Series groups
Pt =	14	Parallel units per phase
Pa =	8	Parallel units per phase in left wye
G =	1	0 = grounded, 1 = ungrounded wye *

Blown capacitor unit fuses n	Parallel group per unit capacitance Cg	Affected wye capacitance Cs	P. U. capacitance, phase with blown fuses Cp	Neutral to ground voltage (per unit of Vlg) Vng	Voltage on affected phase Vln	**Voltage on affected series group Vcu**	**Current through affected capacitor(s) Iu**
0	1.000	1.000	1.0000	0.00000	1.00000	**1.000**	1.000
SU ***	Short Circuit	1.333	1.1905	-0.05970	0.94030	**Short Circuit**	**10.030**
1	0.875	0.966	0.9803	0.00661	1.00661	**1.111**	1.111
2	0.750	0.923	0.9560	0.01487	1.01487	**1.249**	1.249
3	0.625	0.870	0.9255	0.02548	1.02548	**1.427**	1.427
4	0.500	0.800	0.8857	0.03960	1.03960	**1.663**	1.663
5	0.375	0.706	0.8319	0.05935	1.05935	**1.994**	1.994
6	0.250	0.571	0.7551	0.08889	1.08889	**2.489**	2.489
7	0.125	0.364	0.6364	0.13793	1.13793	**3.310**	3.310
8	0.000	0.000	0.4286	0.23529	1.23529	**4.941**	

*** Shorted capacitor unit before fuse operation
* Use 0 for grounded wye, delta, or single-phase banks

NOTE—Additional information for setting of protection is given in Figure 17. The formulae for the various calculations are given in Table 2.

Figure 16—Tabulation of performance of bank illustrated in Figure 15 with n blown fuses

Unbalance protection data

(Values are per unit of normal value except as

EFCPBK2.WK4
"Unb. Prot."

16-Oct-98
11:17 AM

Capacitor Bank Construction
(Copied from "Unit and Bank", Figure 16)

S =	4	Series groups
Pt =	14	Parallel units per phase
Pa =	8	Parallel units per phase in "left"
G =	1	0 = "grounded", 1 = ungrounded wye

Blown fuses n	**Voltage on remaining units Vcu**	Current through affected capacitor(s) Iu	Neutral to ground Voltage (per unit of Vlg) Vng	Current in affected wye Iy	Current in affected phase Iph	Ground current change, + Ig	Neutral current between wyes + In	Difference current, equal wyes +, ++ Id
0	**1.000**	1.000	0.00000	1.0000	1.0000		0.00000	
SU ***	**Short Circuit**	**10.030**	-0.05970	1.2537	1.1194		0.07676	
1	**1.111**	1.111	0.00661	0.9719	0.9868		0.00850	Calculates
2	**1.249**	1.249	0.01487	0.9368	0.9703		0.01912	only for
3	**1.427**	1.427	0.02548	0.8917	0.9490		0.03276	Pt = 2 x Pa
4	**1.663**	1.663	0.03960	0.8317	0.9208		0.05092	
5	**1.994**	1.994	0.05935	0.7478	0.8813		0.07630	
6	**2.489**	2.489	0.08889	0.6222	0.8222		0.11429	
7	**3.310**	3.310	0.13793	0.4138	0.7241		0.17734	
8	**4.941**		0.23529	0.0000	0.5294		0.30252	

*** Shorted capacitor before fuse operation

* use "grounded" for grounded wye, delta, or single phase
+ Per unit of total phase
++ Difference between same phase on right and left

Figure 17—Additional data for setting various unbalance protection schemes for the externally fused wye capacitor bank in Figure 15

--`,,```,,,,````-`-`,,`,,`,`,,`---

Copyright © 2000 IEEE. All rights reserved.

Copyright The Institute of Electrical and Electronics Engineers, Inc.
Provided by IHS under license with IEEE
No reproduction or networking permitted without license from IHS
Not for Resale

Table 2—Details for Figure 16

Column title	Formula and comment
Blown capacitor unit fuses n	The number of fuses that have blown in one parallel group of capacitor units. n = 0 is the system normal condition. n = SU is the condition with a faulted capacitor unit (SU) before the operation of the fuse.
Parallel group per-unit capacitance Cg	$Cg = \frac{Pa - n}{Pa}$ The capacitance of the parallel group of capacitors that includes the blown fuse(s).
Affected wye capacitance Cs	$Cs = \frac{S \times Cg}{Cg(S - 1) + 1}$ The per-unit phase-to-neutral capacitance of the series/parallel group of capacitor units that includes the blown fuse(s). For the group including the affected unit, the per-unit capacitance is Cg. For all other groups, the per-unit capacitance is 1.
Per-unit capacitance, phase with blown fuses Cp	$Cp = \frac{(Cs \times Pa) + Pt - Pa}{Pt}$ The per-unit capacitance of the phase (both wyes) that includes the blown fuse(s). For single wye banks, Pa = Pt and Cp = Cs.
Neutral-to-ground voltage (per unit of Vlg) Vng	$Vng = G\left(\frac{3}{2 + Cp} - 1\right)$ For grounded banks (G = 0), this voltage is always 0. For ungrounded wye banks, the calculation is made assuming the affected phase has a capacitance Cp and the other two phases each have a per-unit capacitance of 1. (It is convenient to develop this equation based on an instant in time when the affected phase has one per-unit voltage and the other two phases have –0.5 per-unit voltage. For this condition the two unaffected phases can be paralleled, and the voltage divider between –0.5 per unit and +1 per unit can be calculated for the midpoint voltage, which is recorded as Vng.)
Voltage on affected phase Vln	$Vln = 1 + Vng$ The voltage line to neutral across the phase that includes the blown fuse(s). The operation of the fuse(s) reduces the capacitance of that phase and increases the voltage across the affected phase; therefore, the numbers are always greater than one except before the operation of the fuse on a faulted capacitor unit.
Voltage on affected series group Vcu	$Vcu = \frac{Vln \times Cs}{Cg}$ (If Cg = 0, Vcu = Vln × S) The per-unit voltage on the capacitor units in the group with the blown fuse(s), based on the capacitance division of the actual voltage on the affected phase (Vln).
Current through affected capacitor(s) Iu	$Iu = Vcu \times Cu$ The current through the individual capacitor units in the group with the blown fuse(s), per unit of the value with no fuses blown. The value for SU indicates the power frequency current available to blow the fuse on a faulted capacitor unit. This value may be used to estimate the maximum clearing time of the fuse (assuming no discharge from parallel capacitor units into the faulted one).

Copyright © 2000 IEEE. All rights reserved.
Copyright The Institute of Electrical and Electronics Engineers, Inc.
Provided by IHS under license with IEEE
No reproduction or networking permitted without license from IHS
Not for Resale

The first four columns of Figure 17 are copied from Figure 16 to make those numbers easily available when considering the unbalance signals. Table 3 briefly discusses the remaining columns in Figure 17.

Table 3—Details for Figure 17

Column title	Formula and comment
Current in affected wye Iy	$Iy = Cs \times Vln$ The per-unit current in the series/parallel group with the blown fuse(s). This valve may be useful for differential schemes comparing the current in different series/parallel groups.
Current in affected phase Iph	$Iph = Cp \times Vln$ The current in the phase with the blown fuses. This may be useful for setting protection based on phase current.
Ground current change Ig	$Ig = (1 - G)(1 - Iph)$ The change in current to ground, which is used with protective relay schemes utilizing either neutral-to-ground current, or the voltage across a low-voltage capacitor(s) in the neutral or in each phase. The per-unit change in current to ground is the per-unit change in voltage across a low-voltage capacitor in the affected phase. It is also the per-unit change in voltage across a low-voltage capacitor in the neutral-to-ground connection because the other two phase currents do not change in a grounded wye bank.
Neutral current between wyes In	$In = \frac{3 \times Vng \times G}{2}$ Unbalance current for ungrounded wye-wye banks. [The current is calculated assuming the neutral-to-ground (zero sequence) voltage is applied at the neutral of the wye with no blown fuses.]
Difference current, equal wyes Id	$Id = Vln(1 - Cp)$ For grounded wye-wye banks, where the difference in the neutral current between the two equal wyes is used as a basis for protection (see Figure 18). Values are per unit of total phase current.

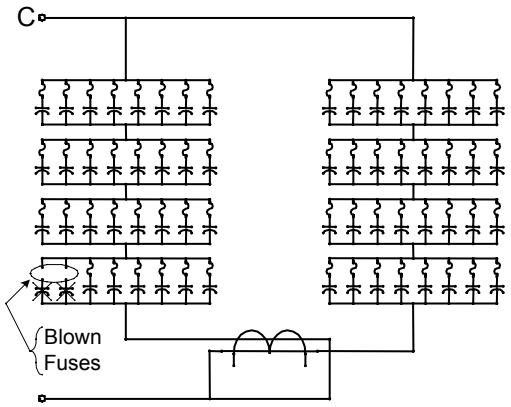

Figure 18—One phase of a capacitor bank arranged to measure the difference current between two equal legs of each phase

Copyright © 2000 IEEE. All rights reserved.

Copyright The Institute of Electrical and Electronics Engineers, Inc.
Provided by IHS under license with IEEE
No reproduction or networking permitted without license from IHS
Not for Resale

8.3.5 Unbalance calculations—tap voltage

A variety of protection schemes, primarily for grounded wye banks, are based on the measurement of a voltage across some number of series groups of the bank. Two common schemes are to

— Measure a voltage near the middle of a phase (midpoint tap; see Figure 19).
— Measure the voltage across the bottom series group(s).

In either case, the measured voltage may be compared with the phase voltages (differential protection) or combined with each other to determine unbalance.

Regardless of the relay type used, the schemes are based on the change in tap voltage caused by a change in the effective capacitance of one series group, resulting from a failure and/or capacitor fuse operations. This change may depend on whether the affected capacitor units are located outside or inside the tap portion of the bank. The calculations assume all of the blown fuses are in one series group in one phase (either inside or outside the tap portion, but not both places at the same time).

Figure 19 illustrates a midpoint-tapped capacitor bank. Figure 20 and Table 4 give the unbalance calculations for grounded wye, delta, or single-phase banks.

For delta or single-phase banks, tap is from the tap point to the reference end of the leg or bank (instead of the neutral). The calculations are made in the same way as shown for three-phase grounded wye banks.

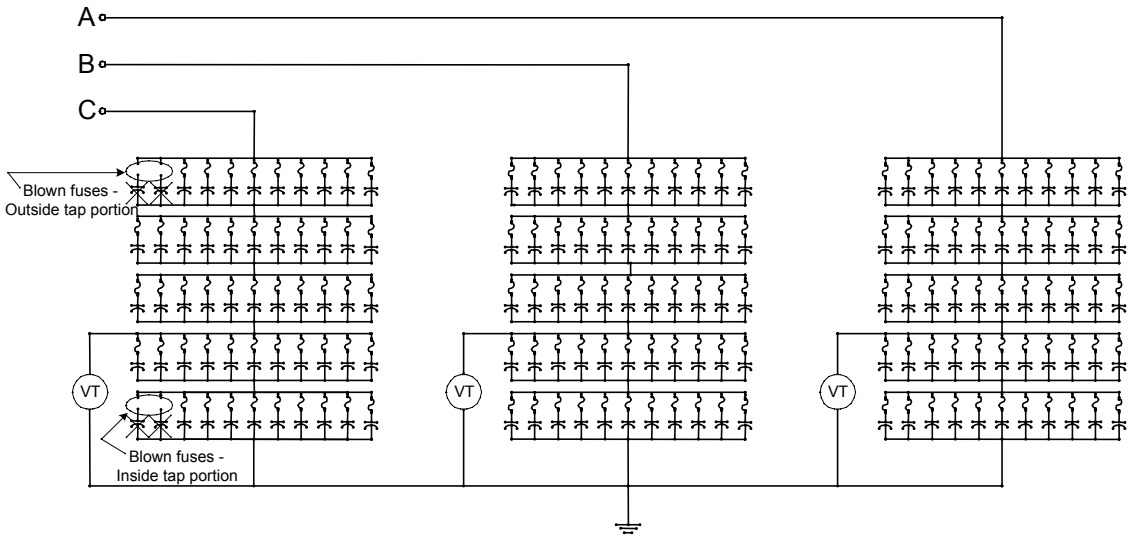

S = 5 series groups—total,
St = 2 series groups within tap portion,
Pt = 11 parallel units per phase.

Figure 19—Illustration of a tapped externally fused capacitor bank

Copyright © 2000 IEEE. All rights reserved.
Copyright The Institute of Electrical and Electronics Engineers, Inc.
Provided by IHS under license with IEEE
No reproduction or networking permitted without license from IHS
Not for Resale

Externally fused capacitors, "Midpoint" tap bank calculations

(Capacitance values are based on 1 capacitor unit = 1 per unit capacitance. MTCPBNK1.WK4
Voltages and currents are per unit of normal value except as indicated.)

19-Oct-98
09:13 AM

Capacitor Bank Construction

S =	5	Series groups - total
St =	2	Series groups within tap portion
Pt =	11	Parallel units per phase

				Blown fuses outside of tap portion			Blown fuses inside of tap portion		
Blown fuses n	Affected phase capacitance Cp	**Voltage on affected capacitor group Vcu**	Current through affected capacitors Iu	Capacitance tap to neutral Ctn	Tap voltage, per unit of Vlg Vtg	**Tap voltage change, per unit of normal dVtg**	Capacitance tap to neutral Ctn	Tap voltage, per unit of Vlg Vtg	**Tap voltage change, per unit of normal dVtg**
0	2.2000	**1.0000**	1.000	5.500	0.4000	**0.0000**	5.500	0.4000	**0.0000**
SU ***	2.7500	**0.0000**	**13.750**	5.500	0.5000	**0.2500**	11.000	0.2500	**-0.3750**
1	2.1569	**1.0784**	1.078	5.500	0.3922	**-0.0196**	5.238	0.4118	**0.0294**
2	2.1064	**1.1702**	1.170	5.500	0.3830	**-0.0426**	4.950	0.4255	**0.0638**
3	2.0465	**1.2791**	1.279	5.500	0.3721	**-0.0698**	4.632	0.4419	**0.1047**
4	1.9744	**1.4103**	1.410	5.500	0.3590	**-0.1026**	4.278	0.4615	**0.1538**
5	1.8857	**1.5714**	1.571	5.500	0.3429	**-0.1429**	3.882	0.4857	**0.2143**
6	1.7742	**1.7742**	1.774	5.500	0.3226	**-0.1935**	3.438	0.5161	**0.2903**
7	1.6296	**2.0370**	2.037	5.500	0.2963	**-0.2593**	2.933	0.5556	**0.3889**
8	1.4348	**2.3913**	2.391	5.500	0.2609	**-0.3478**	2.357	0.6087	**0.5217**
9	1.1579	**2.8947**	2.895	5.500	0.2105	**-0.4737**	1.692	0.6842	**0.7105**
10	0.7333	**3.6667**	3.667	5.500	0.1333	**-0.6667**	0.917	0.8000	**1.0000**
11	0.0000	**5.0000**		5.500	0.0000	**-1.0000**	0.000	1.0000	**1.5000**
12									

*** Shorted capacitor unit, before fuse operation.

Figure 20—Spreadsheet illustrating unbalance calculations for tap voltage protection schemes (Figure 19)

Table 4—Details for Figure 20

Column title	Formula and comment
Affected phase capacitance Cp	$Cp = \frac{Pt(Pt - n)}{Pt + (Pt - n)(S - 1)}$ The capacitance of the phase from end to end, assuming the capacitance of one healthy capacitor unit is 1 per unit.
Voltage on affected capacitor group Vcu	$Vcu = \frac{Cp \times S}{Pt - n}$ Voltage across the group of capacitors that includes the affected capacitor unit, per unit of the normal voltage across that group.
Current through affected capacitor Iu	$Iu = Vcu \times Cu$ The current through the affected capacitor unit(s), per unit of the value with no fuses blown. The value for SU indicates the power frequency current available to blow the fuse on a faulted capacitor. This value may be used to estimate the maximum clearing time of the fuse (assuming no discharge from parallel capacitor units into the faulted one). For healthy capacitor units Cu = 1, and the equation can be simplified to Iu = Vcu.

Copyright © 2000 IEEE. All rights reserved.

Copyright The Institute of Electrical and Electronics Engineers, Inc.
Provided by IHS under license with IEEE
No reproduction or networking permitted without license from IHS
Not for Resale

Table 4—Details for Figure 20 (continued)

Column title	Formula and comment
For blown fuses outside tap portion	
Capacitance tap to neutral Ctn	$Ctu = \frac{Pt}{St}$ The capacitance of the tap portion of the phase, assuming the capacitance of one healthy capacitor unit is 1 per unit.
Tap voltage, per unit of Vlg Vtg	$Vtg = \frac{Cp}{Ctn}$ The voltage across the tap, assuming 1 per-unit voltage is the actual voltage on the phase.
Tap voltage change, per unit of normal dVtg	$dVtg = \frac{Vtg - Vtg(n = 0)}{Vtg(n = 0)}$ The per-unit change in the tap voltage, assuming 1 per unit is the normal tap voltage.
For blown fuses inside tap portion	
Capacitance tap to neutral Ctn	$Ctn = \frac{Pt(Pt - n)}{Pt + (Pt - n)(St - 1)}$ The capacitance of the tap portion of the phase, assuming the capacitance of one healthy capacitor unit is 1 per unit.
Tap voltage per unit of Vlg Vtg	$Vtg = \frac{Cp}{Ctn}$ The voltage across the tap, assuming 1 per-unit voltage is the actual voltage on the phase.
Tap voltage change, per unit of normal dVtg	$dVtg = \frac{Vtg - Vtg(n = 0)}{Vtg(n = 0)}$ The per-unit change in the tap voltage, assuming 1 per unit is the normal tap voltage.

8.3.6 Unbalance calculations—H-bridge

An H-bridge may be used for unbalance protection in a variety of capacitor bank connections: grounded wye, ungrounded wye, delta, and single-phase (series capacitors). The H-bridge is based on a current measurement in a leg connecting two strings of capacitors together near the midpoints of the strings. The current transformer for unbalance detection appears on the crossbar of the capital letter H (see Figure 21), thus the designation H-bridge. Any change in the capacitance of any capacitor in the bridge will cause a change in the H current.

Calculations (see Figure 22) are based on fuse operations in one parallel group of capacitor units. The ambiguity resulting from the operation of fuses in another part of the bank that may cancel the unbalance signal needs a sensitive alarm level (preferably one fuse) so that the defective unit can be replaced before there are many scattered fuse operations. In addition, assuming that one or two “canceling” fuse operations occur at the time of unacceptably high voltages on the affected capacitor units, it may be desirable to set the trip level somewhat lower than suggested by the overvoltages of Figure 22.

For an unsymmetrical arrangement such as shown in Figure 21, the effects of blowing fuses in units in other parts of the bank on the overvoltages H current, etc., may easily be investigated by changing the values of St and Pa so that the affected unit appears to be in the lower left quadrant of Figure 21. All of these calculations assume that all blown fuses are in one parallel group of capacitor units on one side of the H only.

--`,,```,,,,````-`-`,,`,,`,`,,`---
Copyright © 2000 IEEE. All rights reserved.
Copyright The Institute of Electrical and Electronics Engineers, Inc.
Provided by IHS under license with IEEE
No reproduction or networking permitted without license from IHS
Not for Resale

The example illustrated in Figure 21 and Figure 22 is not a recommended H-bridge design, as the overvoltage on remaining units may be excessive following the first fuse operation. Better practice would normally be to have more parallel units or fewer series groups, so that there could be an alarm before trip.

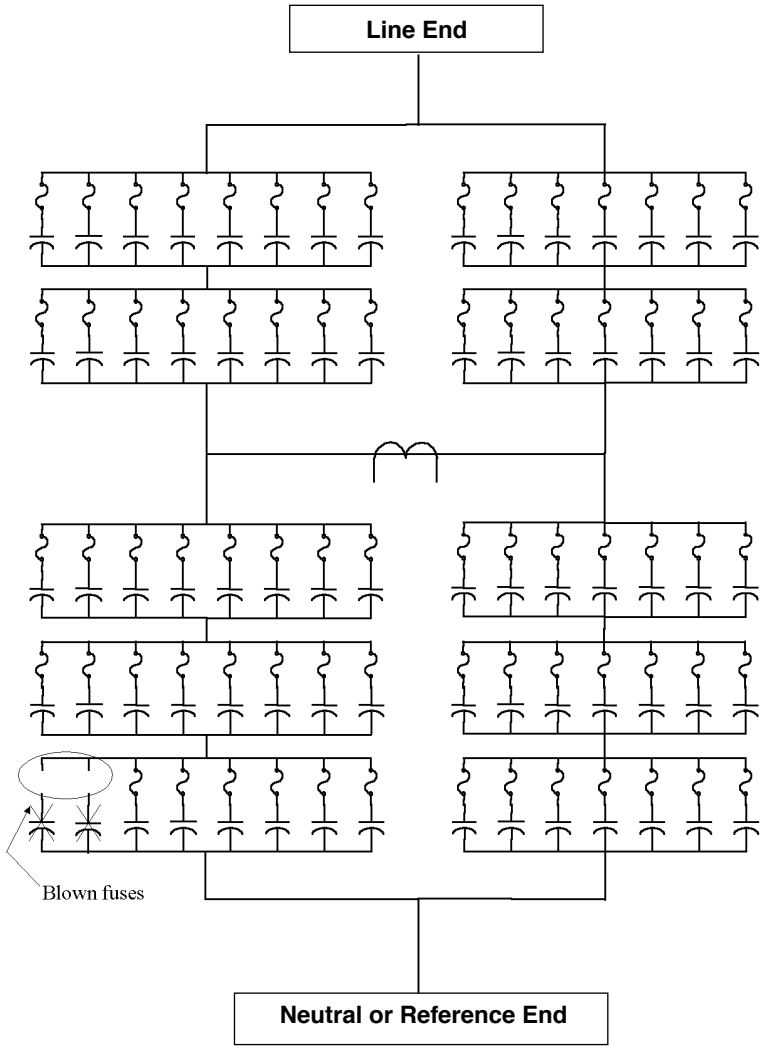

S = 5 series groups—total,
St = 3 series groups, H leg to neutral,
Pt = 15 parallel units per phase,
Pa = 8 parallel units on left side of H,
G = ? (0 = grounded wye; 1 = ungrounded wye).

Figure 21—Illustration of one phase or leg of an H-bridge capacitor bank

Copyright © 2000 IEEE. All rights reserved.

Copyright The Institute of Electrical and Electronics Engineers, Inc.
Provided by IHS under license with IEEE
No reproduction or networking permitted without license from IHS
Not for Resale

Externally fused capacitors, H-Bridge protection

(Chn and Cp are per unit based on each normal capacitor unit being 1 pu. HBRIDGE2.WK4
Other values are per unit of normal value except as indicated.)

19-Oct-98
09:21 AM

Capacitor Bank Construction

S =	5	Series groups - total
St =	3	Series groups, tap point to "neutral"
Pt =	15	Parallel units per phase
Pa =	8	Parallel units on "left" side of H
G =	1	0="grounded", 1=ungrounded wye

Blown fuses n	Capacitance "H-Bridge" to "neutral" Chn	Affected phase capacitance Cp	Affected phase voltage Vln	"H" leg voltage, per unit of Vln Vhn	H" current per unit of total phase current Ih	Voltage on affected capacitor units Vcu	Current through affected capacitor(s) Iu
0	5	3.0000	1.000	0.600	**0**	**1**	1
SU ***	6.333	3.4337	0.954	0.542	**-0.107**	**"Shorted"**	**10.843**
1	4.879	2.9559	1.005	0.606	**0.011**	**1.107**	1.107
2	4.733	2.9019	1.011	0.613	**0.026**	**1.240**	1.240
3	4.556	2.8341	1.019	0.622	**0.044**	**1.408**	1.408
							0.000
4	4.333	2.7465	1.029	0.634	**0.068**	**1.630**	1.630
5	4.048	2.6289	1.043	0.649	**0.100**	**1.935**	1.935
6	3.667	2.4627	1.063	0.672	**0.148**	**2.381**	2.381
7	3.133	2.2100	1.096	0.705	**0.225**	**3.093**	3.093
8	2.333	1.7797	1.157	0.763	**0.366**	**4.412**	
9							

*** Shorted capacitor unit, before fuse operation.

Figure 22—Spreadsheet illustrating unbalance calculations for the H-bridge configuration illustrated in Figure 21

Table 5—Details for Figure 22

Column title	Formula and comment
Blown fuses n	The number of fuses that have blown in one parallel group of capacitor units. n = 0 is the system normal condition. n = SU is the condition with a faulted capacitor unit (SU) before the operation of the fuse.
Capacitance H-bridge to neutral Chn	$Chn = \frac{(Pa - n)Pa}{(Pa - n)(St - 1) + Pa} + \frac{Pt - Pa}{St}$ The capacitance from the H leg to the neutral or reference end of the phase, assuming the capacitance of one capacitor unit is 1 per unit.
Affected phase capacitance Cp	$Cp = \frac{Chn \times Pt}{Chn(S - St) + Pt}$ The capacitance of the phase from end to end, assuming the capacitance of one capacitor unit is 1 per unit.
Affected phase voltage Vln	$Vln = 1 + G\left(\frac{3}{2 + Cp/Cp(0)} - 1\right)$ The voltage across the affected phase will be 1 for grounded wye or delta, where G = 0. For ungrounded wye, this voltage is the per-unit voltage across the affected phase including the effect of the neutral shift from capacitance unbalance.
H leg voltage, per unit of Vln Vhn	$Vhn = \frac{Cp}{Chn}$ The voltage of the H leg, per unit of the actual voltage on the affected phase.

Copyright The Institute of Electrical and Electronics Engineers, Inc.
Provided by IHS under license with IEEE
No reproduction or networking permitted without license from IHS
Not for Resale
Copyright © 2000 IEEE. All rights reserved.

Table 5—Details for Figure 22 (continued)

Column title	Formula and comment
"H" current, per unit of total phase current Ih	$Ih = -Vln\left(\frac{St}{S} - Vhn\right)\left(\frac{1}{S - St} + \frac{1}{St}\right)\left(\frac{S(Pt - Pa)}{Pt}\right)$ The current in the H leg, per unit of the normal total phase current for a wye-connected or single-phase bank or per unit of total leg current for a delta bank.
Voltage on affected capacitor units Vcu	$Vcu = \frac{Vln \times Vhn \times Pa \times S}{Pa + (St - 1)(Pa - n)}$ The voltage across the capacitor units in parallel with the blown fuses, per unit of the value with no fuses blown.
Current through affected capacitor(s) Iu	$Iu = Vcu \times Cu$ The current through the capacitor units in the group with the blown fuse(s), per unit of the value with no fuses blown. The value for SU indicates the power frequency current available to blow the fuse on a faulted capacitor unit. This value may be used to estimate the maximum clearing time of the fuse (assuming no discharge from parallel capacitor units into the faulted one).

8.4 Internally fused capacitor banks

8.4.1 General considerations

Internally fused capacitor units (see Figure 23) are subject to overvoltage across elements and fuses within the unit as internal fuses blow and remove elements from a parallel group. The overvoltage on these remaining elements and fuses shall be considered in addition to the overvoltage on units without blown fuses. The bank design will affect the protection sensitivity.

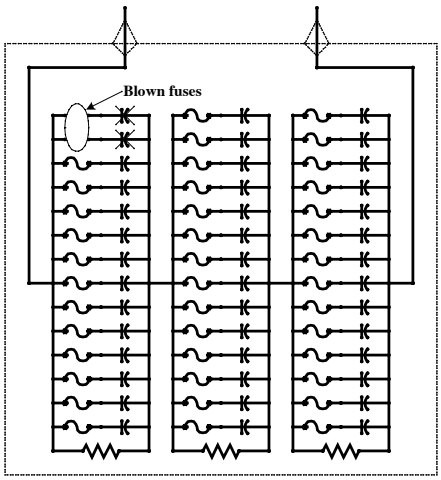

N = 14 parallel elements in a group,
Su = 3 series groups in the capacitor unit,
f = 2 blown fuses in one group.

Figure 23—Schematic of an internally fused capacitor unit

Copyright © 2000 IEEE. All rights reserved.

Copyright The Institute of Electrical and Electronics Engineers, Inc.
Provided by IHS under license with IEEE
No reproduction or networking permitted without license from IHS
Not for Resale

The setting of the unbalance protection of an internally fused capacitor bank shall take into consideration the capability of the internal fuses, the transient overvoltage capability of the elements, and the consequences of a failure to the case or the failure of an internal fuse. These considerations are in addition to the usual considerations of external arcing within the bank and avoiding exposure of healthy capacitor units to voltages in excess of 110% of their rated voltage.

In an internally fused capacitor bank, the unbalance detection gives an indication of the total number of failed capacitor elements within a capacitor unit. In practice, the actual number of failed elements can be determined only by a complete measurement of all units in a bank. This measurement may be recommended only when a relay alarm or trip occurs, and may or may not be a part of the regular maintenance schedule.

8.4.2 Using the calculated values

The trip level should be set so that

— The number of operated fuses in the affected capacitor unit does not exceed the maximum number recommended by the manufacturer.
— The voltage on the healthy capacitors does not exceed the contingency overvoltage capability of the capacitor units (usually 110% of rated voltage). Note that the element voltage in the unit with blown fuses may exceed 110% of normal.

For instance, for the example shown in Figure 24 through Figure 26, the number of blown fuses is shown in the left column of Figure 25 and Figure 26. If the capacitor manufacturer recommends that the bank should be tripped following the operation of the seventh fuse, to assure reliable operation, the trip relay set point would be midway between the unbalance signal with six fuses having operated and the unbalance signal with seven fuses having operated. For this example, the voltage on the healthy capacitor units with seven fuses blown in one capacitor is about 1.069 per unit (third column from the right in Figure 25 and third column from the left in Figure 26), which is less than 10% overvoltage. For banks where the voltage on the healthy units becomes excessive before the maximum number of blown fuses recommended by the manufacturer, the trip relay set level would be set half way between the signal associated with the maximum number of blown fuses with acceptable voltage on healthy capacitor units and the signal associated with the number of fuses that results in excessive voltage on healthy capacitor units.

The alarm would be set above natural errors so that it would operate reliably on the loss of the first or second fuse. This alarm set point would typically be halfway between the signal associated with the selected number of fuses having operated and the signal associated with one fewer fuse having operated.

The actual unbalance signal will depend upon the protection scheme employed for the bank. A wide variety of protection schemes are in use on internally fused shunt capacitor banks. The unbalance signals for some of the more common connections are given in Figure 24 and Figure 25. Other calculated values are given in 8.4.5 and 8.4.6 under separate discussions of H-bridge and tap voltage protection schemes.

In addition to providing the necessary information for protective relay settings, this type of tabulation gives a good feel for the performance of the bank with varying numbers of internal fuses having operated. Some manufacturers of internally fused capacitor banks will provide this type of tabulation for the banks they propose or supply.

Of course, it is possible to combine the calculations of the various columns and calculate only

— The voltage on the affected elements.
— The voltage on the affected unit (which is also the voltage on the parallel units).
— The unbalance signal for the type of protection to be utilized.

Copyright © 2000 IEEE. All rights reserved.
Copyright The Institute of Electrical and Electronics Engineers, Inc.
Provided by IHS under license with IEEE
No reproduction or networking permitted without license from IHS
Not for Resale

Because of the complexity of the configuration (for example, parallel elements and series groups in a capacitor unit, parallel capacitor units in a group, series groups in a string, and parallel capacitor units in a phase), the resulting equations become complex.

The time delay for tripping should be minimized in order to reduce the probability of case rupture in the event of a fault to the case or fuse failure within a capacitor unit. In addition to the considerations of 8.2.4, it may be desirable to coordinate with the melting of an individual fuse element where there is no parallel energy to speed up the fuse operation. [The manufacturer of the capacitor units should be able to supply the maximum clearing time (curve) for the internal fuses.] There is no need to wait to coordinate for fuse operation with unbalance signals that are larger than would occur for a shorted element before fuse operation.

Normally a time delay of 0.01–0.05 s is adequate for this coordination. With this intentional time delay in the trip relay, the additional time required for the lockout relay and breaker operation may result in total clearing times of the order of 0.1 s for a capacitor unit with an internal fault or a capacitor bank with an arcing fault. A time of 0.1 s is reasonably achievable to clear a capacitor bank with a problem, but still may result in substantial damage. Once parts of a capacitor bank start to become damaged, further damage will escalate rapidly. Such escalation will increase the risk of major damage and fire and may result in increased damage to the capacitor bank. Keeping the clearing time short is important to minimizing damage in the event of a fault within a bank.

With internally fused capacitors it is not appropriate to use protection schemes with enough delay to override the effect of system faults (which may persist for cycles).

Generally the most appropriate alarm level is the lowest level that can be set without resulting in false alarms from thermal variations in capacitance within the bank, practical initial bank balance, etc. (The earliest reliable alarm gives maximum opportunity to repair the capacitor bank during a scheduled outage.) Responding reasonably to early alarms and maintaining the bank in the best possible condition tend to minimize the probability of further element failures and forced or unscheduled outages and maximize the availability of the bank. False or unreliable alarms can be costly, and they decrease the credibility of the capacitor protection.

In unbalance protection schemes with ambiguous indication, it is desirable to use an alarm setting sensitive to the loss of the first element to avoid the ambiguity. This alarm should seal in so that it shall be manually reset following the removal of the failed capacitor units from the bank. It would be undesirable to have the alarm shut off following the operation of a subsequent fuse that cancels the unbalance signal.

The timing of the alarm should be long enough to avoid operation during system faults or temporary overvoltages, but short enough in the case of ambiguous schemes to minimize the probability of two compensating fuse operations before the initiation of the alarm. Usually about a 10 s delay is appropriate for the alarm.

In managing the protection of an internally fused capacitor bank, the unbalance protection should not be reset or “rebalanced” without first ensuring that all capacitor units with failed elements have been removed from the bank.

If the installation is to be rebalanced with units having one (or two) failed elements remaining in service, the trip level should be adjusted downward so that the fuses and elements in these units do not exceed their capability before operation of the trip relay.

8.4.3 Introduction to capacitor bank unbalance calculations

The sample calculations in 8.4.4 through 8.4.6 are in three groups:

Copyright © 2000 IEEE. All rights reserved.

Copyright The Institute of Electrical and Electronics Engineers, Inc.
Provided by IHS under license with IEEE
No reproduction or networking permitted without license from IHS
Not for Resale

a) Wye, delta, and single-phase (see 8.4.4 for discussion, Figure 24 for bank diagram, and Figure 25 and Figure 26 for tabulated calculations). These calculations provide the information required for setting the unbalance protection based on
   1) Neutral-to-ground voltage for ungrounded wye banks.
   2) Neutral current for ungrounded wye-wye banks.
   3) Neutral voltage difference for ungrounded wye-wye banks.
   4) Neutral-to-ground current for grounded wye banks.
   5) Voltage across low-voltage capacitors at the neutral end of each phase or in neutral-to-ground connection of grounded wye banks.
   6) Difference in neutral-to-ground currents for grounded wye-wye banks.
   7) Delta and single-phase bank protection based on schemes similar to a) 1) through a) 6).

b) Tap voltage protection schemes (see 8.4.6 for discussion, Figure 30 for bank diagram, and Figure 31 for tabulated calculations). These calculations provide the information required for setting the unbalance protection based on
   1) Midpoint to ground tap voltages for grounded wye banks.
   2) Differential protection, comparing the voltage across one or more series groups with the system line to ground voltage for grounded wye banks.
   3) Delta and single-phase bank protection based on schemes similar to b) 1) and b) 2).

c) H-bridge protection schemes (see 8.4.5 for discussion, Figure 28 for bank diagram, and Figure 29 for tabulated calculations). These calculations provide the information required for setting the unbalance protection based on the current between midpoints of two similar legs connected phase to neutral or ground, phase to phase, or in the phase (series capacitors).

The system of units used for most of these calculations assumes every normal non-zero voltage, capacitance, and current is 1 per unit under normal conditions, with no fuses having operated (exceptions are indicated).

In addition to providing the necessary information for protective relay settings, this type of tabulation gives a good feel for the performance of the bank with varying numbers of internal fuses having operated. Some manufacturers of internally fused capacitor banks will provide this type of tabulation for the banks they propose or supply.

It is, of course, possible to combine the calculations of the various columns and calculate only the voltage on the affected elements, the voltage on the affected unit (which is also the voltage on the parallel units), and the unbalance signal for the type of protection to be utilized. Because of the complexity of the configuration (for example, parallel elements and series groups in a capacitor unit, parallel capacitor units in a group, series groups in a string, and parallel capacitor units in a phase), the resulting equations become complex.

8.4.4 Unbalance calculations—wye, delta, and single-phase

The principal equation for each column of Figure 25 and Figure 26 is given in Table 7. [Some equations for the conditions where an element has faulted, but the fuse has not yet blown (SE), are different. Different equations are also used for cases where the equations in Table 7 result in dividing by zero.]

These tabulations illustrate the unbalance that occurs in the affected phase of the bank as a result of individual fuse operations.

The column headings in the tabulations are based on wye-connected three-phase capacitor banks. For delta-connected banks the same formulae and tabulation(s) can be used by treating a leg of the delta as one phase of a grounded wye bank; all of the formulae are identical. For a delta bank, the currents shown as per-unit-of-phase current become per-unit-of-leg current (phase current divided by $\sqrt{3}$). The difference current (equal wyes) becomes the difference in current between two equal delta-connected legs.

Copyright © 2000 IEEE. All rights reserved.
Copyright The Institute of Electrical and Electronics Engineers, Inc.
Provided by IHS under license with IEEE
No reproduction or networking permitted without license from IHS
Not for Resale

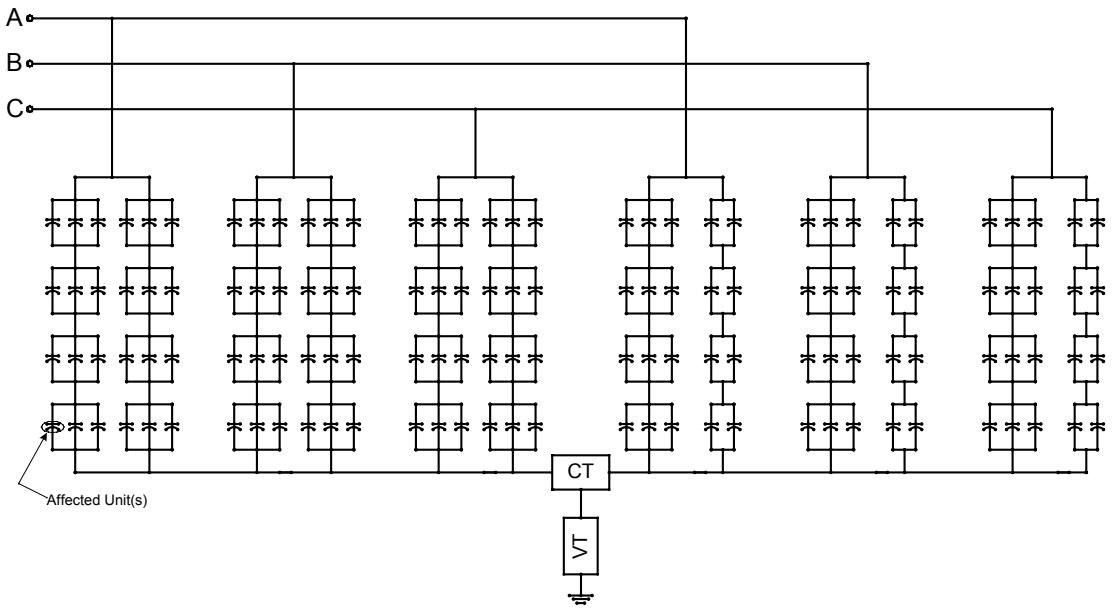

S = 4 series groups line to neutral,
Pt = 11 parallel units per phase,
Pa = 6 parallel units per phase in left wye,
P = 3 parallel units in affected string,
G = ? (0 = grounded; 1 = ungrounded).

CT is a current transformer on ungrounded wye-wye banks.
TR is a resistor potential device, capacitor voltage transformer, or voltage transformer on an ungrounded bank or a current transformer or low-voltage capacitor (capacitor shunt) on a grounded wye bank.

Figure 24—Illustration of an uneven double wye capacitor bank

Internally fused capacitors, wye connected banks

IFCPBK2.WK4

(Values are per unit of normal value except as indicated. Calculations and notation based on wye connected banks.)

17-Dec-97
10:42 AM

Capacitor unit construction

N= 14 Parallel elements in a group
Su= 3 Number of series groups in capacitor unit

Capacitor Bank Construction

S = 4 Series groups
Pt = 11 Parallel units per phase
Pa = 6 Parallel units per phase in left wye
P = 3 Parallel units in affected string
G = 1 0 = grounded, 1 = ungrounded wye *

Blown fuses f	Internal group per unit capacitance Ci	Internal group voltage (for capacitor unit at 1 per unit voltage) Vg	Capacitor unit per unit capacitance Cu	Parallel group per unit capacitance Cg	Affected string capacitance Cs	P. U. capacitance, phase with affected unit Cp	Neutral to ground voltage (per unit of Vlg) Vng	Voltage on affected phase Vln	**Voltage on affected unit Vcu**	**Voltage on affected elements Ve**	Current through affected capacitor Iu
0	1.000	1.000	1.000	1.000	1.000	1.0000	0.00000	1.00000	**1.000**	**1.000**	1.000
SE ***	Short Circuit	0.000	1.500	1.167	1.037	1.0101	-0.00336	0.99664	**0.886**	**0.000**	1.329
1	0.929	1.050	0.975	0.992	0.998	0.9994	0.00019	1.00019	**1.006**	**1.057**	0.981
2	0.857	1.105	0.947	0.982	0.996	0.9988	0.00040	1.00040	**1.014**	**1.120**	0.960
3	0.786	1.167	0.917	0.972	0.993	0.9981	0.00065	1.00065	**1.022**	**1.192**	0.937
4	0.714	1.235	0.882	0.961	0.990	0.9972	0.00092	1.00092	**1.031**	**1.274**	0.910
5	0.643	1.313	0.844	0.948	0.986	0.9963	0.00123	1.00123	**1.042**	**1.368**	0.879
6	0.571	1.400	0.800	0.933	0.982	0.9952	0.00160	1.00160	**1.054**	**1.476**	0.843
7	0.500	1.500	0.750	0.917	0.978	0.9939	0.00202	1.00202	**1.069**	**1.603**	0.802
8	0.429	1.615	0.692	0.897	0.972	0.9924	0.00253	1.00253	**1.086**	**1.754**	0.752
9	0.357	1.750	0.625	0.875	0.966	0.9906	0.00314	1.00314	**1.107**	**1.937**	0.692
10	0.286	1.909	0.545	0.848	0.957	0.9883	0.00390	1.00390	**1.133**	**2.162**	0.618
11	0.214	2.100	0.450	0.817	0.947	0.9855	0.00485	1.00485	**1.165**	**2.447**	0.524
12	0.143	2.333	0.333	0.778	0.933	0.9818	0.00610	1.00610	**1.207**	**2.817**	0.402
13	0.071	2.625	0.188	0.729	0.915	0.9768	0.00778	1.00778	**1.265**	**3.320**	0.237
14	0.000	3.000	0.000	0.667	0.889	0.9697	0.01020	1.01020	**1.347**	**4.041**	0.000
15											

*** Shorted element, before fuse operation

* use "grounded" for grounded wye, delta, or single phase banks

Figure 25—Tabulation/spreadsheet of unbalance calculations for the capacitor bank defined in Figure 24

--`,,```,,,,````-`-`,,`,,`,`,,`---
Copyright © 2000 IEEE. All rights reserved.

Copyright The Institute of Electrical and Electronics Engineers, Inc.
Provided by IHS under license with IEEE
No reproduction or networking permitted without license from IHS
Not for Resale

Unbalance protection data

IFCPBK2.WK4

(Values are per unit of normal value except as indicated.)

22-Apr-99
10:29 AM

Capacitor unit construction
(Copied from "Unit and Bank")

N = 14 Parallel elements in a group
Su = 3 Number of series groups in capacitor unit

Capacitor Bank Construction
(Copied from "Unit and Bank")

S = 4 Series groups
Pt = 11 Parallel units per phase
Pa = 6 Parallel units per phase in "left" wye
P = 3 Parallel units in affected string
G = 1 0 = "grounded", 1 = ungrounded wye *

Blown fuses f	Voltage on affected elements Ve	Voltage on affected unit Vcu	Current through affected capacitor Iu	Neutral to ground voltage (per unit of Vlg) Vng	Current in affected string Ist	Current in affected phase Iph	Ground current change, + Ig	Neutral current between wyes + In	Difference current, equal wyes +, ++ Id
0	**1.000**	**1.000**	1.000	0.00000	1.0000	1.0000		0.00000	
SE ***	**0.000**	**0.886**	1.329	-0.00336	1.0336	1.0067		-0.00458	
1	**1.057**	**1.006**	0.981	0.00019	0.9981	0.9996		0.00026	
2	**1.120**	**1.014**	0.960	0.00040	0.9960	0.9992		0.00055	
3	**1.192**	**1.022**	0.937	0.00065	0.9935	0.9987		0.00088	
4	**1.274**	**1.031**	0.910	0.00092	0.9908	0.9982		0.00125	Calculates
5	**1.368**	**1.042**	0.879	0.00123	0.9877	0.9975		0.00168	only for
6	**1.476**	**1.054**	0.843	0.00160	0.9840	0.9968		0.00218	Pt = 2 x Pa
7	**1.603**	**1.069**	0.802	0.00202	0.9798	0.9960		0.00276	
8	**1.754**	**1.086**	0.752	0.00253	0.9747	0.9949		0.00345	
9	**1.937**	**1.107**	0.692	0.00314	0.9686	0.9937		0.00429	
10	**2.162**	**1.133**	0.618	0.00390	0.9610	0.9922		0.00532	
11	**2.447**	**1.165**	0.524	0.00485	0.9515	0.9903		0.00662	
12	**2.817**	**1.207**	0.402	0.00610	0.9390	0.9878		0.00831	
13	**3.320**	**1.265**	0.237	0.00778	0.9222	0.9844		0.01062	
14	**4.041**	**1.347**	0.000	0.01020	0.8980	0.9796		0.01391	
15									

*** Shorted element, before fuse operation

* use "grounded" for grounded wye, delta or single phase banks
\+ Per unit of total phase current
++ Difference between same phase on right and left wye

Figure 26—Additional data for protection data, continued from the spreadsheet of Figure 25

Table 6—Details for Figure 25

Column title	Formula and comment
Blown fuses f	The number of fuses that have blown in one parallel group of elements inside one capacitor unit. f = 0 is the system normal condition. f = SE is the condition with a faulted element (SE) before the operation of the element fuse.
Internal group per-unit capacitance Ci	$Ci = \frac{N - f}{N}$ The per-unit capacitance of the group, based on the number of blown fuses. The value for N is input at the top of the page and for f is from column one. For this and all subsequent columns, an "if" statement has been included so that if f > N, nothing is printed.
Internal group voltage (for capacitor unit at 1 per-unit voltage) Vg	$Vg = \frac{Su \times N}{(Su - 1)(N - f) + N}$ The voltage that would occur across the affected group of elements where the fuses are blowing if there was 1 per-unit voltage on the capacitor unit. For the calculation, the capacitance of all groups except the affected group is 1 per unit. The capacitance of the affected group is Ci.

Copyright © 2000 IEEE. All rights reserved.
Copyright The Institute of Electrical and Electronics Engineers, Inc.
Provided by IHS under license with IEEE
No reproduction or networking permitted without license from IHS
Not for Resale

Table 6—Details for Figure 25 (continued)

Column title	Formula and comment
Capacitor unit per-unit capacitance Cu	$Cu = \frac{Su \times Ci}{Ci \times (Su - 1) + 1}$ The capacitance of the affected capacitor unit, assuming all groups except the affected group have 1 per-unit capacitance and the affected group has the capacitance Ci.
Parallel group per-unit capacitance Cg	$Cg = \frac{P - 1 + Cu}{P}$ The capacitance of the group of capacitors that includes the affected unit. For all of the units in that group except the affected unit, the per-unit capacitance is 1. For the affected unit, the per-unit capacitance is Cu.
Affected string capacitance Cs	$Cs = \frac{S \times Cg}{Cg(S - 1) + 1}$ The per-unit capacitance of the string of (parallel groups of) capacitor units from phase to neutral that includes the affected capacitor unit. For the group including the affected unit, the per-unit capacitance is Cg. For all other groups, the per-unit capacitance is 1.
Per-unit capacitance, phase with affected unit Cp	$Cp = \frac{(Cs \times P) + Pt - P}{Pt}$ The per-unit capacitance of the phase (all parallel strings) that includes the affected unit. For this calculation the capacitance of the affected string is Cs. The capacitance of all the other strings is 1 per unit.
Neutral-to-ground voltage (per unit of Vlg) Vng	$Vng = G\left(\frac{3}{2 + Cp} - 1\right)$ The neutral-to-ground voltage. For grounded banks (G = 0), this voltage is always 0. For ungrounded wye banks, the calculation assumes the affected phase has a capacitance Cp and the other two phases each have a per-unit capacitance of 1. (It is convenient to develop this equation based on an instant in time when the affected phase has 1 per-unit voltage and the other two phases have –0.5 per-unit voltage. For this condition the two unaffected phases can be paralleled, and the voltage divider between –0.5 per unit and +1 per unit can be calculated for the midpoint voltage, which is recorded as Vng.)
Voltage on affected phase Vln	$Vln = 1 + Vng$ The voltage line to neutral across the phase that includes the affected unit. With fused units, the operation of the fuse reduces the capacitance of that phase and increases the voltage across the affected phase; therefore, the numbers are always greater than one except before the operation of the fuse on a faulted element.
Voltage on affected unit Vcu	$Vcu = \frac{Vln \times Cs}{Cg}$ (If Cg = 0, Vcu = Vln × S) The actual per-unit voltage on the affected capacitor unit, based on the capacitance division of the actual voltage on the affected phase (Vln).
Voltage on affected elements Ve	$Ve = Vcu \times Vg$ The actual per-unit voltage on the affected elements, based on the actual voltage on the affected unit.
Current through affected capacitor Iu	$Iu = Vcu \times Cu$ The current through the affected capacitor unit, per unit of the value with no fuses blown. The value for SE indicates the power frequency current available to blow the fuse on a faulted element. This value may be used to estimate the maximum clearing time of the fuse (assuming no discharge from parallel elements into the faulted one).

Copyright © 2000 IEEE. All rights reserved.

Copyright The Institute of Electrical and Electronics Engineers, Inc.
Provided by IHS under license with IEEE
No reproduction or networking permitted without license from IHS
Not for Resale

The first five columns of Figure 26 are copied from Figure 25 to make those numbers easily available when considering the unbalance signals. Table 7 briefly discusses the columns in Figure 26.

Table 7—Details for Figure 26

Column title	Formula and comment
Voltage on affected elements Ve	$Ve = Vcu \times Vg$ The actual per-unit voltage on the affected elements, based on the actual voltage on the affected unit.
Voltage on the affected unit Vcu	$Vcu = \frac{Vln \times Cs}{Cg}$ (If $Cg = 0$, $Vcu = Vln \times S$) The actual per-unit voltage on the affected capacitor unit based on the capacitance division of the actual voltage on the affected phase.
Current through affected capacitor Iu	$Iu = Vcu \times Cu$ The current through the affected capacitor unit, per unit of the value with no fuses blown. The value on the second line (SE) indicates the power frequency current available to blow the fuse on a faulted element. This value may be used to estimate the maximum clearing time of the fuse (assuming no discharge from parallel elements into the faulted one).
Neutral to ground voltage (per unit of Vlg) Vng	$Vng = G\left(\frac{3}{2 + Cp} - 1\right)$ This column indicates the neutral to ground voltage for use with protection schemes on ungrounded wye capacitor banks that are based on the neutral to ground voltage. The value is copied from the spreadsheet of Figure 25.
Current in affected string Ist	$Ist = Cs \times Vln$ The per-unit current in the affected string. This value may be useful for differential schemes comparing the current in parallel strings.
Current in affected phase Iph	$Iph = Cp \times Vln$ The current in the affected phase. This equation may be useful for setting protection based on phase current.
Ground current change Ig	$Ig = (1 - G)(1 - Iph)$ For use with protective relay schemes utilizing neutral-to-ground current, or the voltage across a low-voltage capacitor in the neutral or in each phase. The per-unit change in current to ground is the per-unit change in voltage across a low-voltage capacitor in the affected phase. It is also the per-unit change in voltage across a low-voltage capacitor in the neutral-to-ground connection because the other two phase currents do not change in a grounded bank.
Neutral current between wyes In	$In = \frac{3 \times Vng \times G(Pt - Pa)}{2}$ Unbalance current for ungrounded wye-wye banks. [The current is calculated assuming the neutral-to-ground (zero sequence) voltage is applied at the neutral of the unaffected wye, which is half the of the bank.]
Difference current, equal wyes Id	$Id = Vln(1 - Cp)$ For grounded wye-wye banks where the difference in the neutral current between the two equal wyes is used as a basis for protection (see Figure 27). Values are per unit of total phase current.

Copyright © 2000 IEEE. All rights reserved.
Copyright The Institute of Electrical and Electronics Engineers, Inc.
Provided by IHS under license with IEEE
No reproduction or networking permitted without license from IHS
Not for Resale

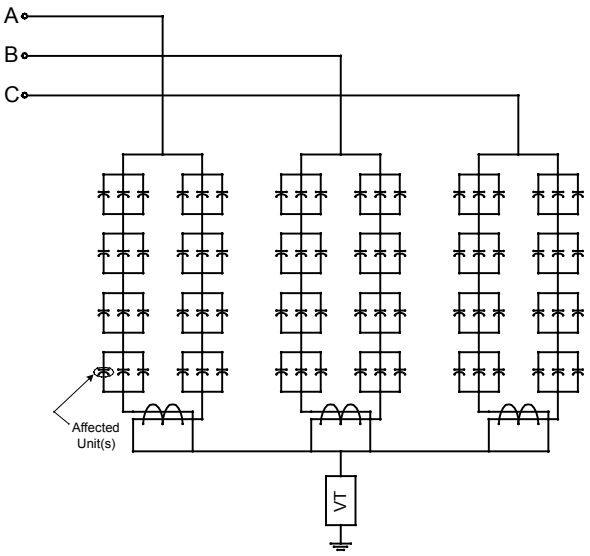

Figure 27—Capacitor bank arranged to measure the difference current between two equal legs in each phase

8.4.5 Unbalance calculations—H-bridge

An H-bridge may be used for unbalance protection in a variety of capacitor bank connections: grounded wye, ungrounded wye, delta, and single-phase (series capacitors). The H-bridge is based on a current measurement in a leg connecting two strings of capacitors together near the midpoints of the strings. The current transformer appears to be on the crossbar of the capital letter H (see Figure 28), thus the designation H-bridge. Any change in the capacitance of any capacitor in the bridge will cause a change in the current in the H.

Calculations (see Figure 29) are based on internal fuse operations in one group of elements in one capacitor unit. The ambiguity resulting from the operation of fuses in another part of the bank that may cancel the unbalance signal needs to be addressed (see 8.2.1).

For an unsymmetrical arrangement such as shown in Figure 28, the effects of blowing fuses in units in other parts of the bank on the overvoltages and H current, etc., may easily be investigated by appropriately changing the values of St, Pa, and P so that the affected unit appears to be in the lower left quadrant of Figure 28. All of these calculations assume that all blown fuses are in one group of the affected unit only.

Copyright © 2000 IEEE. All rights reserved.

Copyright The Institute of Electrical and Electronics Engineers, Inc.
Provided by IHS under license with IEEE
No reproduction or networking permitted without license from IHS
Not for Resale

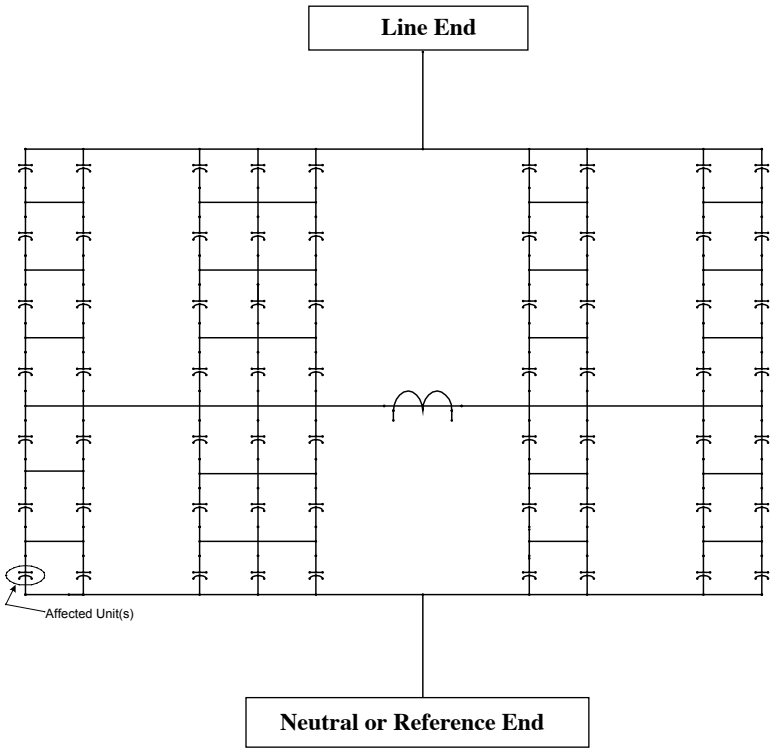

S = 7 series groups—total,
St = 3 series groups, H leg to neutral,
Pt = 9 parallel units per phase,
Pa = 5 parallel units on left side of H,
P = 2 parallel units in affected string,
G = ? (0 = grounded or delta; 1 = ungrounded wye).

Figure 28—Illustration of one leg of an H-bridge capacitor bank

Copyright © 2000 IEEE. All rights reserved.
Copyright The Institute of Electrical and Electronics Engineers, Inc.
Provided by IHS under license with IEEE
No reproduction or networking permitted without license from IHS
Not for Resale

Internally fused capacitors, H-Bridge protection

HBRIDGE.WK4

(Chn and Cp are per unit based on each normal capacitor unit being 1 pu.
Other values are per unit of normal value except as indicated.)

23-May-2000
11:53 AM

Capacitor unit construction

N =	16	Parallel elements in a group
Su =	3	Number of series groups in capacitor unit

Capacitor Bank Construction

S =	7	Series groups - total
St =	3	Series groups, tap point to "neutral"
Pt =	9	Parallel units per phase (Pa + Pb)
Pa =	5	Parallel units on "left" side of H
P =	2	Parallel units in affected string
G =	1	0="grounded", 1=ungrounded wye

Blown fuses f	Affected capacitor per unit capacitance Cu	Capacitance "H-Bridge" to "neutral" Chn	Affected phase capacitance Cp	Affected phase voltage Vln	"H" leg voltage, per unit of Vln Vh	"H" current, per unit of total phase current Ih	Voltage on affected capacitor unit Vcu	Voltage on affected element group Ve	Current through affected capacitor Iu
0	1	3	1.2857	1.000	0.42857	0	1	1	1
SE ***	1.5	3.048	1.2944	0.998	0.42472	-0.00698	0.848	0	1.27
1	0.978	2.998	1.2853	1.000	0.42877	0.00036	1.008	1.052	0.99
2	0.955	2.995	1.2848	1.000	0.42899	0.00076	1.017	1.109	0.97
3	0.929	2.992	1.2842	1.000	0.42924	0.00121	1.026	1.173	0.95
4	0.900	2.989	1.2836	1.001	0.42951	0.00171	1.037	1.245	0.93
5	0.868	2.985	1.2829	1.001	0.42982	0.00227	1.050	1.326	0.91
6	0.833	2.980	1.2821	1.001	0.43018	0.00292	1.064	1.418	0.89
7	0.794	2.975	1.2812	1.001	0.43059	0.00366	1.080	1.525	0.86
8	0.750	2.970	1.2801	1.001	0.43106	0.00452	1.099	1.648	0.82
9	0.700	2.963	1.2789	1.002	0.43162	0.00554	1.121	1.794	0.78
10	0.643	2.955	1.2774	1.002	0.43228	0.00675	1.147	1.967	0.74
11	0.577	2.945	1.2756	1.003	0.43309	0.00821	1.180	2.178	0.68
12	0.500	2.933	1.2733	1.003	0.43408	0.01004	1.219	2.439	0.61
13	0.409	2.918	1.2705	1.004	0.43535	0.01235	1.270	2.771	0.52
14	0.300	2.899	1.2667	1.005	0.43702	0.01540	1.337	3.208	0.40
15	0.167	2.872	1.2616	1.006	0.43930	0.01959	1.428	3.809	0.24
16	0.000	2.833	1.2541	1.008	0.44262	0.02571	1.562	4.686	0.00
17									

*** Shorted element,
before fuse operation

Figure 29—Spreadsheet illustrating unbalance calculations for the configuration of Figure 28, with individual capacitors having 16 parallel elements (N) in each of 3 series groups (SU)

Table 8—Details for Figure 29

Column title	Formula and comment
Blown fuses f	The number of fuses that have blown in one parallel group of elements inside one capacitor unit. f = 0 is the system normal condition. f = SE is the condition with a shorted element (SE) before the operation of the element fuse.
Affected capacitor per-unit capacitance Cu	$Cu = Su \times \frac{N - f}{(N - f)(Su - 1) + N}$ The per-unit capacitance of the affected capacitor unit, based on the number of blown fuses.
Capacitance H-bridge to neutral Chn	$Chn = \frac{(Cu + P - 1)P}{(Cu + P - 1)(St - 1) + P} + \frac{Pt - P}{St}$ The capacitance from the H leg to the neutral or reference end on the phase, assuming the capacitance of one healthy capacitor unit is 1 per unit.
Affected phase capacitance Cp	$Cp = \frac{Chn \times Pt}{Chn(S - St) + Pt}$ The capacitance of the phase from end to end, assuming the capacitance of one healthy capacitor unit is 1 per unit.

Copyright © 2000 IEEE. All rights reserved.

Copyright The Institute of Electrical and Electronics Engineers, Inc.
Provided by IHS under license with IEEE
No reproduction or networking permitted without license from IHS
Not for Resale

Table 8—Details for Figure 29 (continued)

Column title	Formula and comment
Affected phase voltage Vln	$Vln = 1 + G\left(\frac{3}{2 + Cp/Cp(0)} - 1\right)$ The voltage across the affected phase, that is, 1 for grounded wye or delta, where G = 0. For ungrounded wye, this voltage is the per-unit voltage across the affected phase including the effect of the neutral shift from capacitance unbalance.
H leg voltage, per unit of Vln Vh	$Vh = \frac{Cp}{Chn}$ The voltage of the H leg, per unit of the actual voltage on the affected phase.
H current, per unit of total phase current Ih	$Ih = -Vln\left(\frac{St}{S} - Vh\right)\left(\frac{1}{S - St} + \frac{1}{St}\right)\left(\frac{S(Pt - Pa)}{Pt}\right)$ The current in the H leg, per unit of the normal total phase current for a wye-connected or single-phase bank or per unit of total leg current for a delta bank.
Voltage on affected capacitor unit Vcu	$Vcu = \frac{Vln \times Vh \times P \times S}{P + (St - 1)(Cu + P - 1)}$ The voltage across the affected capacitor unit, per unit of the value with no fuses blown.
Voltage on affected elements Ve	$Ve = \frac{Vcu \times Su \times N}{Su(N - f) + f}$ The voltage across the remaining elements in the affected element group (also the voltage across the blown fuses in that group), per unit of the value with no fuses blown.
Current through affected capacitor unit Iu	$Iu = Vcu \times Cu$ The current through the affected capacitor unit, per unit of the value with no fuses blown. The value for SE indicates the power frequency current available to blow the fuse on a faulted element. This value may be used to estimate the maximum clearing time of the fuse (assuming no discharge from parallel elements into the faulted one).

8.4.6 Unbalance calculations—(midpoint) tap

A variety of protection schemes, primarily for grounded wye banks, are based on the measurement of a voltage across some number of series groups of the bank. Two common schemes are to

— Measure a voltage near the middle of a phase (midpoint tap).
— Measure the voltage across the bottom series group(s).

In either case, the measured voltage may be compared with the phase voltages (differential protection) or combined with each other to determine unbalance.

Regardless of the relay type used, the schemes are based on the change in tap voltage as a result of a change in the capacitance of an affected capacitor unit. This change may depend on whether the affected capacitor unit is located outside or inside the tap portion of the bank. Figure 30 illustrates a midpoint-tapped capacitor bank. Figure 31 and Table 9 give the unbalance calculations for grounded wye, delta, or single-phase banks.

Copyright © 2000 IEEE. All rights reserved.
Copyright The Institute of Electrical and Electronics Engineers, Inc.
Provided by IHS under license with IEEE
No reproduction or networking permitted without license from IHS
Not for Resale

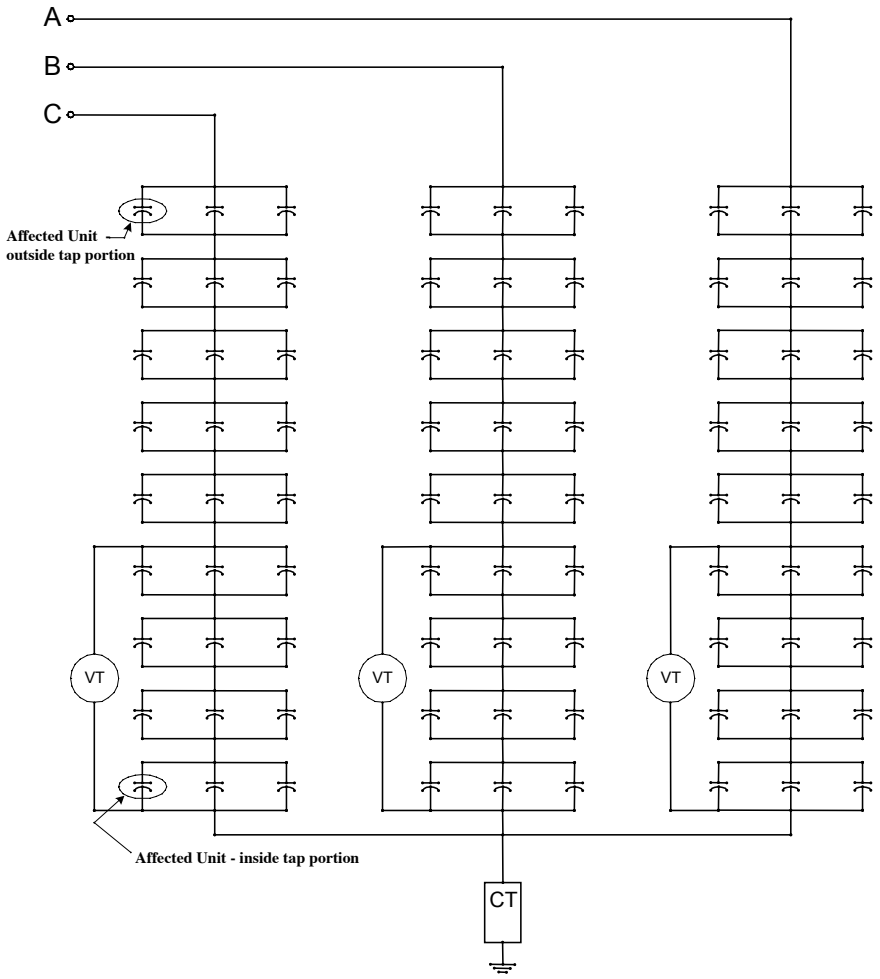

S = 9 series groups—total,
St = 4 series groups within tap portion,
Pt = 3 parallel units per phase.

Figure 30—Illustration of a "midpoint"-tapped internally fused capacitor bank

Copyright © 2000 IEEE. All rights reserved.

Copyright The Institute of Electrical and Electronics Engineers, Inc.
Provided by IHS under license with IEEE
No reproduction or networking permitted without license from IHS
Not for Resale

Internally fused capacitors, "Midpoint" tap bank calculations MTCPBNK.WK4

(Cp and Chn are per unit based on each normal capacitor unit being 1 pu.
Other values are per unit of normal value except as indicated.)

24-May-2000
07:36 AM

Capacitor unit construction

N =	16	Parallel elements in a group
Su =	3	Number of series groups in capacitor unit

Capacitor Bank Construction

S =	9	Series groups - total
St =	4	Series groups within tap portion
Pt =	3	Parallel units per phase
G =	0	0="grounded", 1=ungrounded wye

						Affected unit outside of tap portion			**Affected unit inside of tap portion**		
Blown fuses f	Affected capacitor per unit capacitance Cu	Affected phase capacitance Cp	**Voltage on affected capacitor group Vcu**	**Voltage on affected element group Ve**	Current through affected capacitor Iu	Capacitance tap to neutral Chn	Tap voltage, per unit of Vlg Vtg	**Tap voltage change, per unit of normal dVtg**	Capacitance tap to neutral Chn	Tap voltage, per unit of Vlg Vtg	**Tap voltage change, per unit of normal dVtg**
0	1	0.3333	**1.0000**	**1.000**	1.000	0.750	0.4444	**0**	0.750	0.4444	**0**
SE* **	1.5	0.3387	**0.8710**	**0**	1.306	0.750	0.4516	**-0.01613**	0.778	0.4355	**0.02016**
1	0.978	0.3331	**1.0065**	**1.050**	0.985	0.750	0.4441	**0.00081**	0.749	0.4449	**-0.00101**
2	0.955	0.3328	**1.0137**	**1.106**	0.968	0.750	0.4437	**0.00171**	0.747	0.4454	**-0.00213**
3	0.929	0.3324	**1.0216**	**1.168**	0.949	0.750	0.4432	**0.00270**	0.745	0.4459	**-0.00338**
4	0.900	0.3321	**1.0305**	**1.237**	0.927	0.750	0.4427	**0.00382**	0.744	0.4466	**-0.00477**
5	0.868	0.3316	**1.0406**	**1.314**	0.904	0.750	0.4422	**0.00507**	0.741	0.4473	**-0.00634**
6	0.833	0.3312	**1.0519**	**1.403**	0.877	0.750	0.4416	**0.00649**	0.739	0.4481	**-0.00812**
7	0.794	0.3306	**1.0650**	**1.503**	0.846	0.750	0.4408	**0.00812**	0.736	0.4490	**-0.01015**
8	0.750	0.3300	**1.0800**	**1.620**	0.810	0.750	0.4400	**0.01000**	0.733	0.4500	**-0.01250**
9	0.700	0.3293	**1.0976**	**1.756**	0.768	0.750	0.4390	**0.01220**	0.730	0.4512	**-0.01524**
10	0.643	0.3284	**1.1183**	**1.917**	0.719	0.750	0.4379	**0.01479**	0.725	0.4527	**-0.01849**
11	0.577	0.3274	**1.1433**	**2.111**	0.660	0.750	0.4365	**0.01792**	0.720	0.4544	**-0.02239**
12	0.500	0.3261	**1.1739**	**2.348**	0.587	0.750	0.4348	**0.02174**	0.714	0.4565	**-0.02717**
13	0.409	0.3245	**1.2122**	**2.645**	0.496	0.750	0.4327	**0.02653**	0.707	0.4592	**-0.03316**
14	0.300	0.3224	**1.2617**	**3.028**	0.379	0.750	0.4299	**0.03271**	0.697	0.4626	**-0.04089**
15	0.167	0.3197	**1.3279**	**3.541**	0.221	0.750	0.4262	**0.04098**	0.684	0.4672	**-0.05123**
16	0.000	0.3158	**1.4211**	**4.263**	0.000	0.750	0.4211	**0.05263**	0.667	0.4737	**-0.06579**
17											

*** Shorted element,
before fuse operation

Figure 31—Spreadsheet illustrating unbalance calculations for tap voltage protection schemes (Figure 30), with individual capacitor units having 16 parallel elements (N) in each of three series groups (Su)

Table 9—Details for Figure 31

Column title	Formula and comment
Affected capacitor per-unit capacitance Cu	$Cu = Su \times \frac{N - f}{(N - f)(Su - 1) + N}$ The per-unit capacitance of the affected capacitor unit, based on the number of blown fuses in one group (in the affected capacitor).
Affected phase capacitance Cp	$Cp = \frac{Pt(Pt - 1 + Cu)}{Pt + (Pt - 1 + Cu)(S - 1)}$ The capacitance of the phase from end to end, assuming the capacitance of one healthy capacitor unit is 1 per unit.
Voltage on affected capacitor group Vcu	$Vcu = \frac{Cp \times S}{Pt - 1 + Cu}$ The voltage across the group of capacitors that includes the affected capacitor unit, per unit of the normal voltage across that group.
Voltage on affected element group Ve	$Ve = \frac{Vcu \times Su \times N}{Su(N - f) + f}$ The voltage across the remaining elements in the affected element group (also the voltage across the blown fuses in that group), per unit of the value with no fuses blown.

Copyright © 2000 IEEE. All rights reserved.
Copyright The Institute of Electrical and Electronics Engineers, Inc.
Provided by IHS under license with IEEE
No reproduction or networking permitted without license from IHS
Not for Resale

Table 9—Details for Figure 31 (continued)

Column title	Formula and comment
Current through affected capacitor Iu	$Iu = Vcu \times Cu$ The current through the affected capacitor unit, per unit of the value with no fuses blown. The value for SE indicates the power frequency current available to blow the fuse on a faulted element. This value may be used to estimate the maximum clearing time of the fuse (assuming no discharge from parallel elements into the faulted one).
For affected unit outside tap portion	
Capacitance tap to neutral Chn	$Ch\,n = \frac{Pt}{St}$ The capacitance of the tap portion of the phase, assuming the capacitance of one healthy capacitor unit is 1 per unit.
Tap voltage, per unit of Vlg Vtg	$Vtg = \frac{Cp}{Chn}$ The voltage across the tap, assuming 1 per-unit voltage is the actual voltage on the phase.
Tap voltage change, per unit of normal dVtg	$dVtg = \frac{Vtg(f=0) - Vtg}{Vtg(f=0)}$ The per-unit change in the tap voltage, assuming 1 per unit is the normal tap voltage.
For affected unit inside tap portion	
Capacitance tap to neutral Chn	$Chn = \frac{Pt(Pt - 1 + Cu)}{Pt + (Pt - 1 + Cu)(St - 1)}$ The capacitance of the tap portion of the phase, assuming the capacitance of one healthy capacitor unit is 1 per unit.
Tap voltage per unit of Vlg Vtg	$Vtg = \frac{Cp}{Chn}$ The voltage across the tap, assuming 1 per-unit voltage is the actual voltage on the phase.

8.5 Fuseless capacitor banks

8.5.1 General considerations

The internal construction of the capacitor units used in fuseless capacitor banks is similar to that used for externally fused banks. The parallel connected capacitor unit of Figure 32 (a) illustrates a unit with 10 series groups of three elements each. In this construction, if one element fails, it short-circuits itself and the two elements in parallel with it.

In the capacitor bank, individual capacitor units are connected in series with each other from the phase connection to the neutral connection. Each such series connection is a “string.” Within the string, all of the elements (groups) are in series with each other. For instance, if the string consists of six capacitor units, each having eight series (groups of) elements, the string would have $6 \times 8 = 48$ elements in series (see Figure 33). If one of the elements fails, the applied voltage is then divided among the remaining (groups of) healthy elements in series with the faulted element. The voltage across the remaining elements will thus be 48/47 of what it had been before the failure.

Copyright © 2000 IEEE. All rights reserved.

Copyright The Institute of Electrical and Electronics Engineers, Inc.
Provided by IHS under license with IEEE
No reproduction or networking permitted without license from IHS
Not for Resale

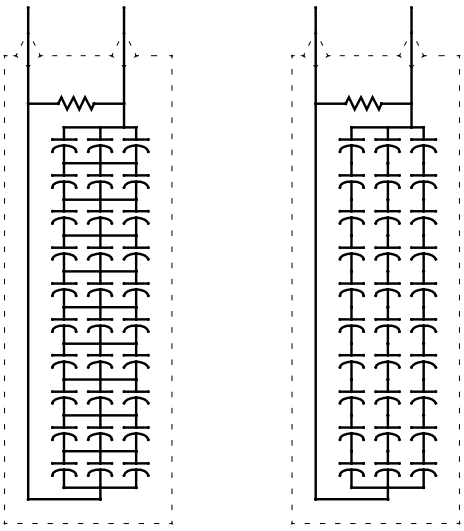

(a) Parallel-connected capacitor unit
(b) Series-connected capacitor unit

Figure 32—Unfused capacitor units

The calculation of unbalance performance of fuseless capacitor banks is based on the number of failed elements (element groups) and the total number of (groups of) elements in series.

On occasion, series connected capacitor units [see Figure 32(b)] have been offered for fuseless capacitor banks. Series connected capacitor units have the individual elements connected in series strings between the terminals, with a number of such series strings in each unit. Banks built with series connected capacitor units require much more sensitive unbalance protection and are not covered in this guide.

As indicated, the number of elements in series in a string is the number of capacitor units in series times the number of elements in series in each capacitor unit. Sometimes the manufacturer has or will provide the number of elements in series. See the capacitor unit nameplate or data sheet. If the number of series elements per capacitor unit is not available from the manufacturer, the number may be estimated. Each element usually has a nominal voltage rating of 1800–2400 V. Dividing the capacitor unit voltage by 2400 and rounding up to the next integer will usually give a useable estimate for the unbalance calculations and settings. For instance, a 7960 V capacitor unit will probably have about $7960 \div 2400 = 3.3$, which rounds up to four series elements. (It may have five series elements per capacitor unit, which will make a small difference in the overvoltages and unbalance signals. However, the settings based on four series elements will still provide adequate protection for the five series element design.)

In a fuseless capacitor bank, the unbalance detection gives an indication of the total number of failed elements within a string of capacitor units. The location of these failures is determined by capacitance measurements on the strings indicated by the unbalance protection.

8.5.2 Using the calculated values

The trip level should be set so that the voltage on the remaining elements in the affected string does not exceed the maximum recommended by industry standards or the manufacturer.

The number of shorted elements for trip and alarm can be determined by knowing the voltage on the affected elements (for instance, the right column of Figure 34 or the second column from left in Figure 35) and the

Copyright © 2000 IEEE. All rights reserved.
Copyright The Institute of Electrical and Electronics Engineers, Inc.
Provided by IHS under license with IEEE
No reproduction or networking permitted without license from IHS
Not for Resale

capability of the elements (either 110% of rating based on industry standards or the information provided by the capacitor manufacturer). Based on the example calculated in Figure 34 and Figure 35, for standard capacitor units applied at rated voltage and element capability of 110%, tripping should occur following the shorting of the fifth element. At this point, the voltage on the remaining elements is 110.2%.

Calculations may also be made without knowing the number of series elements by using the total string capacitance and tripping on the capacitance change that will result in a 110% voltage on the remaining capacitors in the string. Also to avoid case rupture in the event of a terminal-to-case fault, the bank should trip on the loss of elements equivalent to the shorting of one capacitor unit. For capacitor banks with more than 10 capacitor units per string, the tripping for the loss of one capacitor unit will be lower than 110% voltage on the remaining units.

In order to ensure that elements are not subjected to voltages in excess of their intended application, the trip would normally be set halfway between the signal associated with four shorted elements and the signal associated with five shorted elements. Alternatively, the trip relay may be set at an unbalance that would result in 110% voltage on the remaining elements.

In managing the protection of a fuseless capacitor bank, the unbalance protection should not be reset or "rebalanced" without first ensuring that all capacitor units with failed elements have been removed from the bank and replaced with healthy capacitor units. If the installation is to be rebalanced with units having one (or two) shorted elements remaining in service, the trip level should be adjusted downward so that the elements in these units do not exceed their capability before operation of the trip relay.

The time delay for tripping should be minimized in order to minimize the probability of major damage in the event of a major problem in the bank. Practical limitations on the minimum time include the following:

a) Preventing a bank that is operating in the alarm state from tripping on a system transient overvoltage.
b) Accounting for the settling time of the protection system on initial energization and for the transient response of certain capacitor voltage transformers, etc., that may be a part of the unbalance protection system.
c) Preventing smaller banks that do not incorporate system unbalance compensation in the protection scheme from tripping during a system fault.

Normally a time delay of 0.01–0.05 s is adequate for this coordination. With this intentional time delay in the trip relay, the additional time required for the lockout relay and breaker operation may result in total clearing times of the order of 0.1 s. A time of 0.1 s is reasonably achievable to clear a capacitor bank with a problem, but still may result in substantial damage. Once parts of a capacitor bank start to become damaged, further damage will escalate rapidly. Such escalation will increase the risk of other damage in the substation. Keeping the clearing time short is important to minimizing damage in the event of a fault within a bank.

Longer time delays are sometimes used for uncompensated protection (to avoid tripping during a system fault that may persist for a longer period of time), and the risk of major damage in the bank is accepted. Other users may allow the bank to trip for these conditions in order to minimize the possibility of bank damage.

The alarm would be set above natural errors so that it would operate reliably on the shorting of the first or second element. This alarm set point would typically be halfway between the signal associated with the selected number of shorted elements and the signal associated with one fewer shorted elements.

Generally the most appropriate alarm level is the lowest level that can be set without resulting in false alarms from thermal variations in capacitance within the bank, practical initial bank balance, etc. (The earliest reliable alarm gives maximum opportunity to repair the capacitor bank during a scheduled outage.) Responding

--`,,```,,,,````-`-`,,`,,`,`,,`---
Copyright © 2000 IEEE. All rights reserved.

Copyright The Institute of Electrical and Electronics Engineers, Inc.
Provided by IHS under license with IEEE
No reproduction or networking permitted without license from IHS
Not for Resale

reasonably to early alarms and maintaining the bank in the best possible condition tend to minimize the probability of further element failures and forced or unscheduled outages and maximize the availability of the bank. False or unreliable alarms can be costly, and they reduce the credibility of the capacitor protection.

In unbalance protection schemes with ambiguous indication, it is desirable to use an alarm setting sensitive to the loss of the first element to avoid any ambiguity. This alarm should seal in so that it shall be manually reset following the removal of the failed capacitor unit(s) from the bank. It would be undesirable to have the alarm go away following the shorting of a subsequent element that cancels the unbalance signal.

The timing of the alarm should be long enough to avoid operation during system faults or temporary overvoltages, but short enough in the case of ambiguous schemes to minimize the probability of two compensating fuse operations before the initiation of the alarm. Usually about a 10 s delay is appropriate for the alarm.

8.5.3 Introduction to capacitor bank unbalance calculations

The sample calculations in 8.5.4 provide the information required for setting the unbalance protection based on the following:

a) Neutral-to-ground voltage for ungrounded wye banks.
b) Neutral current for ungrounded wye-wye banks.
c) Neutral voltage difference for ungrounded wye-wye banks.
d) Neutral-to-ground current for grounded wye banks.
e) Voltage across low-voltage capacitors at the neutral end of each phase or in the neutral-to-ground connection of grounded wye banks.
f) Difference in neutral-to-ground currents for grounded wye-wye banks.
g) Delta and single-phase bank protection based on schemes similar to a) through f).

The system of units used for most of these calculations assumes every normal non-zero voltage, capacitance, and current is 1 per unit under normal conditions, with no shorted elements.

In addition to providing the necessary information for protective relay settings, this type of tabulation gives a good feel for the performance of the bank with varying numbers of shorted elements. Some manufacturers of fuseless capacitor banks will provide this type of tabulation for the banks they propose or supply.

It is, of course, possible to combine the calculations of the various columns and calculate only the voltage on the affected elements, the voltage on the affected unit (which is also the voltage on the parallel units), and the unbalance signal for the type of protection to be utilized. Because of the complexity of the configuration (for example, parallel elements and series groups in a capacitor unit, parallel capacitor units in a group, series groups in a string, and parallel strings in a phase), the resulting equations become complex.

8.5.4 Unbalance calculations

Figure 33 illustrates a generalized wye-connected fuseless capacitor bank. The figure shows two strings in the left wye, one string in the right wye. In the calculations of Figure 34 and Figure 35, the total number of strings (St) and the number of strings in the left wye (Sl) can be specified. For a single wye bank, Sl = St. For the calculations, all failures are assumed to be in the leftmost string. This string is defined as one string. If other strings have more or less capacitance than the leftmost string, they may be specified as fractional strings. For instance, if the leftmost string is made up of 400 kvar units and one of the other strings is made up of the same number and voltage rating of 600 kvar units, the string with the 600 kvar units would be considered as 1.5 strings for calculation purposes. For the example of Figure 34 and Figure 35, the bank is considered to have two strings in each phase of the left wye (Sl) and three strings in each phase of the bank

Copyright © 2000 IEEE. All rights reserved.
Copyright The Institute of Electrical and Electronics Engineers, Inc.
Provided by IHS under license with IEEE
No reproduction or networking permitted without license from IHS
Not for Resale

(St). With such an unbalanced arrangement, the calculations would normally be done both with Sl = 2 and Sl = 1 in order to investigate the effects of failures in both wyes.

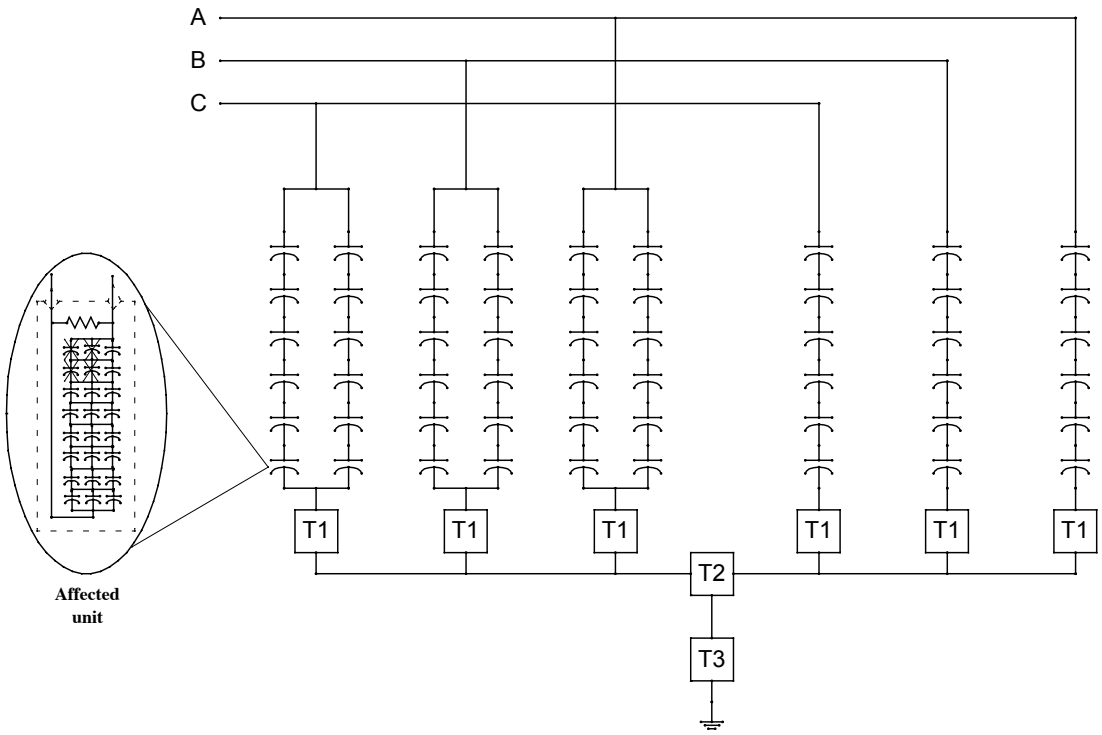

NOTE—T1, T2, and T3 are the appropriate low-voltage capacitors, current transformers, voltage transformers, etc., for the protection being used.

Figure 33—Unsymmetrical fuseless double wye-connected capacitor bank

The principal equation for each column of Figure 34 and Figure 35 is given in Table 10 and Table 11. These tabulations illustrate the unbalance that occurs in the affected phase of the bank as a result of the shorting of elements in one string.

The actual unbalance signal will depend upon the protection scheme employed for the bank. A wide variety of protection schemes are in use on fuseless shunt capacitor banks. The unbalance signals for usual connections are given in Figure 34 and Figure 35.

The column headings in the tabulations are based on wye-connected three-phase capacitor banks. For delta-connected banks, the same formulae and tabulation(s) can be used by treating a leg of the delta as one phase of a grounded wye bank; all of the formulae are identical. For a delta bank, the currents shown as per-unit-of-phase current become per-unit-of-leg current (phase current divided by $\sqrt{3}$). The difference current (equal wyes) becomes the difference in current between two equal delta-connected legs.

In addition to providing the necessary information for protective relay settings, this type of tabulation gives a good feel for the performance of the bank with varying numbers of shorted elements. Some manufacturers of fuseless capacitor banks may provide this type of tabulation for the banks they propose or supply.

It is, of course, possible to combine the calculations of the various columns and calculate only the voltage on the affected elements and the unbalance signal for the specific type of protection to be utilized. Figure 34 and Figure 35 have been generalized to cover most of the fuseless bank configurations protection schemes used.

Copyright © 2000 IEEE. All rights reserved.

Copyright The Institute of Electrical and Electronics Engineers, Inc.
Provided by IHS under license with IEEE
No reproduction or networking permitted without license from IHS
Not for Resale

Fuseless capacitor banks, wye connected

(Values are per unit of normal value except as indicated.
Calculations and notation based on wye connected banks.)

27-May-98
11:58 AM

FLCPBK.WK4
"Bank Unbalance"

Capacitor Bank Construction

E =	48	Series elements, phase to neutral
Sp =	3	Parallel strings per phase
Sl =	2	Parallel strings per phase in left wye
G =	1	0 = grounded, 1 = ungrounded wye *

Shorted capacitor elements e	String per unit capacitance Cst	Affected wye capacitance Cy	Affected phase capacitance Cp	Neutral to ground voltage (per unit of Vlg) Vng	Voltage on affected phase Vln	**Voltage on affected elements Ve**
0	1.000	1.000	1.0000	0.00000	1.00000	**1.000**
1	1.021	1.011	1.0071	0.00236	0.99764	**1.019**
2	1.043	1.022	1.0145	0.00481	0.99519	**1.038**
3	1.067	1.033	1.0222	0.00735	0.99265	**1.059**
4	1.091	1.045	1.0303	0.01000	0.99000	**1.080**
5	1.116	1.058	1.0388	0.01276	0.98724	**1.102**
6	1.143	1.071	1.0476	0.01563	0.98438	**1.125**
7	1.171	1.085	1.0569	0.01862	0.98138	**1.149**
8	1.200	1.100	1.0667	0.02174	0.97826	**1.174**
9	1.231	1.115	1.0769	0.02500	0.97500	**1.200**
10	1.263	1.132	1.0877	0.02841	0.97159	**1.227**
11	1.297	1.149	1.0991	0.03198	0.96802	**1.256**
12	1.333	1.167	1.1111	0.03571	0.96429	**1.286**
13	1.371	1.186	1.1238	0.03963	0.96037	**1.317**
14	1.412	1.206	1.1373	0.04375	0.95625	**1.350**

* use grounded for grounded wye, delta, or single phase banks

Figure 34—Unbalance calculations for a wye-connected fuseless capacitor bank (Figure 33)

Copyright © 2000 IEEE. All rights reserved.
Copyright The Institute of Electrical and Electronics Engineers, Inc.
Provided by IHS under license with IEEE
No reproduction or networking permitted without license from IHS
Not for Resale

Unbalance protection data

(Values are per unit of normal value except as indicated.)

FLCPBK.WK4
"Unb. Prot."

27-May-98
11:58 AM

Capacitor Bank Construction
(Copied from "Bank unbalance")

E =	48	Series elements, phase to neutral
Sp =	3	Parallel strings per phase
Sl =	2	Parallel units per phase in left wye
G =	1	0 = grounded, 1 = ungrounded wye *

Shorted capacitor elements e	Voltage on affected elements Ve	Neutral to ground voltage (per unit of Vlg) Vng	Current in affected wye Iy	Current in affected phase Iph	Ground current + Ig	Neutral current between wyes + In	Difference current, equal wyes +, ++ Id
0	**1.000**	0.00000	1.0000	1.0000		0.0000	
1	**1.019**	0.00236	1.0083	1.0047		0.0024	Calculates
2	**1.038**	0.00481	1.0168	1.0096		0.0048	only for
3	**1.059**	0.00735	1.0257	1.0147		0.0074	St = 2 x Sl
4	**1.080**	0.01000	1.0350	1.0200		0.0100	
5	**1.102**	0.01276	1.0446	1.0255		0.0128	
6	**1.125**	0.01563	1.0547	1.0313		0.0156	
7	**1.149**	0.01862	1.0652	1.0372		0.0186	
8	**1.174**	0.02174	1.0761	1.0435		0.0217	
9	**1.200**	0.02500	1.0875	1.0500		0.0250	
10	**1.227**	0.02841	1.0994	1.0568		0.0284	
11	**1.256**	0.03198	1.1119	1.0640		0.0320	
12	**1.286**	0.03571	1.1250	1.0714		0.0357	
13	**1.317**	0.03963	1.1387	1.0793		0.0396	
14	**1.350**	0.04375	1.1531	1.0875		0.0437	

* use "grounded" for grounded wye, delta, or single phase banks
\+ Per unit of total phase current
++ Difference between same phase on right and left wye

Figure 35—Unbalance summary, wye-connected fuseless capacitor bank

Table 10—Details for Figure 34

Column title	Formula and comment
Shorted capacitor elements e	The number of elements that have shorted in one string of elements between phase and neutral.
String per-unit capacitance Cst	$Cst = \frac{E}{E - e}$ The capacitance of the affected string of capacitor units.
Affected wye capacitance Cy	$Cy = \frac{Sl - 1 + Cst}{Sl}$ The capacitance of all strings of capacitors in phase of the wye that includes the affected string. For all of the strings in that wye except the affected string, the per-unit capacitance is Sl – 1. For the affected string, the per-unit capacitance is Cst.
Affected phase capacitance Cp	$Cp = \frac{(Cy \times Sl) + Sp - Sl}{Sp}$ The per-unit capacitance of the phase (all parallel strings) that includes the affected string. For this calculation the capacitance of the affected wye is Cy. The capacitance of the other wye is 1 per unit.

Copyright © 2000 IEEE. All rights reserved.

Copyright The Institute of Electrical and Electronics Engineers, Inc.
Provided by IHS under license with IEEE
No reproduction or networking permitted without license from IHS
Not for Resale

Table 10—Details for Figure 34 (continued)

Column title	Formula and comment
Neutral-to-ground voltage (per unit of Vlg) Vng	$Vng = G\left(1 - \frac{3}{2 + Cp}\right)$ For grounded banks (G = 0), this voltage is always 0. For ungrounded wye banks, the calculation assumes the affected phase has a capacitance Cp and the other two phases each have a per-unit capacitance of 1. (It is convenient to develop this equation based on an instant in time when the affected phase has 1 per-unit voltage and the other two phases have –0.5 per-unit voltage. For this condition the two unaffected phases can be paralleled and the voltage divider between –0.5 per unit and +1 per unit can be calculated for the midpoint voltage, which is recorded as Vng.)
Voltage on affected phase Vln	$Vln = 1 - Vng$ The voltage line to neutral across the phase that includes the affected string. With fuseless capacitor banks, the shorting of elements increases the capacitance of that phase and decreases the voltage across the affected phase; therefore, the voltage is always less than 1 per unit with shorted elements, except with grounded wye banks.
Voltage on affected elements Ve	$Ve = Vln \times \frac{E}{E - e}$ The per-unit voltage on the remaining elements in the affected string, based on the actual voltage on the affected string.

The first three columns of Figure 35 are copied from Figure 34 to make those numbers easily available when considering the unbalance signals. Table 11 discusses the remaining columns in Figure 35.

Table 11—Details for Figure 35

Column title	Formula and comment
Current in affected wye Iy	$Iy = Cy \times Vln$ The per-unit current in the affected phase of the affected wye. This equation may be useful for estimating the increase in voltage across a low-voltage capacitor at the neutral end of the affected phase of the affected wye.
Current in affected phase Iph	$Iph = Cp \times Vln$ The current in the affected phase. This equation may be useful for setting protection based on phase current or the voltage across a low capacitor at the neutral end of the affected phase.
Ground current Ig	$Ig = (1 - G)(1 - Iph)$ For use with protective relay schemes utilizing neutral-to-ground current, or the voltage across a low-voltage capacitor in the neutral-to-ground connection. The per-unit change in current to ground is the per-unit change in voltage across a low-voltage capacitor in the affected phase. It is also the per-unit change in voltage across a low-voltage capacitor in the neutral-to-ground connection because the other two phase currents do not change in a grounded bank.

Copyright © 2000 IEEE. All rights reserved.
Copyright The Institute of Electrical and Electronics Engineers, Inc.
Provided by IHS under license with IEEE
No reproduction or networking permitted without license from IHS
Not for Resale

Table 11—Details for Figure 35 (continued)

Column title	Formula and comment
Neutral current between wyes In	$In = \frac{3 \times Vng \times G \times (Sp - Sl)}{Sp}$ The unbalance current for ungrounded wye-wye banks. [The current is calculated assuming the neutral-to-ground (zero sequence) voltage is applied at the neutral of the unaffected wye.]
Difference current Id	$Id = Vln(1 - Cp)$ For grounded wye-wye banks where the difference in the neutral current between the two equal wyes is used as a basis for protection (see Figure 27). Values are per unit of total phase current.

8.6 Unfused capacitor banks

8.6.1 General considerations

This clause covers the formulae for unbalance calculations for unfused capacitor banks built in the same way as conventional externally or internally fused banks (groups of capacitor units in parallel with each other and the groups connected in series from phase to neutral or ground) but with no fuses either internally or externally. These banks are normally of modest size; therefore, fuses or subdivision of the bank into multiple strings is not required to limit the energy into a fault within the bank.

Capacitor units in unfused capacitor banks are subject to overvoltage across elements within a unit as elements become shorted within the unit. The overvoltage on these remaining elements shall be considered in the protection of unfused capacitor banks. Excessive voltage on remaining elements may lead to cascading violent failure during system transient overvoltages. This consideration of excessive voltage on remaining elements is in addition to the usual considerations of protection for external arcing within the bank and avoiding exposure of healthy capacitor units to voltages in excess of 110% of their rated voltage.

In an unfused capacitor bank, the unbalance detection gives an indication of the number of failed element groups within one capacitor unit. In practice, the actual number of failed elements throughout the bank can only be determined by a measurement of all series groups in a bank. This measurement may be recommended only when an alarm or relay trip has occurred and may or may not be a part of the regular maintenance schedule.

In order to calculate the overvoltage on the remaining element groups in a capacitor unit, the number of element groups in each capacitor unit shall be specified. Sometimes the manufacturer will provide the number of elements in series. See the capacitor unit nameplate or data sheet. If the number of series elements per capacitor unit is not available from the manufacturer, the number may be estimated. Each element usually has a nominal voltage capability of between 1800 V to 2400 V. Dividing the capacitor unit voltage by 2400 and rounding up to the next integer will usually give a useable estimate for the unbalance calculations and settings. For instance, a 7960 V capacitor unit will probably have about 7960 ÷ 2400 = 3.31, which rounds up to four series elements. (It may have five series elements per capacitor unit, which will make a small difference in the overvoltage and unbalance signals. However, the setting based on four series elements will still provide adequate protection for a five series element design.)

Copyright © 2000 IEEE. All rights reserved.

Copyright The Institute of Electrical and Electronics Engineers, Inc.
Provided by IHS under license with IEEE
No reproduction or networking permitted without license from IHS
Not for Resale

8.6.2 Using the calculated values

The trip level should be set so that

— The voltage on the remaining elements in the affected capacitor unit does not exceed the maximum recommended by the manufacturer.
— The voltage on the healthy capacitors does not exceed the contingency overvoltage capability of the capacitor units (usually 110% of rated voltage).

For simplicity, the protection may be set to trip on the shorting of the first element group.

The number of shorted element groups for trip and alarm can be determined by knowing the voltage on the remaining elements in the capacitor unit with the shorted element group(s) (for instance, the second column from right in Figure 37 or the second column from left in Figure 38) and the capability of the capacitor units based on the information provided by the manufacturer. Based on the example calculated in Figure 37 and Figure 38, for capacitor units with element capability of 125%, tripping should occur following the shorting of the third element group. At this point, the voltage on the remaining elements is 139%.

In order to ensure reliable operation following the shorting of the third element, the trip level would be normally set midway between the unbalance signal associated with two operated elements and the unbalance signal with three shorted elements. Alternatively, the trip relay could be set at an unbalance that would result in 125% voltage on the remaining elements.

If the capacitor unit capability is not available from the manufacturer, usually a value of about 125% on the stressed elements is reasonable if a restrike free switch or circuit breaker is being used or the installation is being protected with surge arresters at or below 2 per unit. For an energizing transient voltage of 2 per unit, the remaining element groups would be subjected to a stress of ($2 \times 1.25 =$) 2.5 per unit, which should be within the capability of standard capacitor units.

The alarm would be set above natural errors so that it would operate reliably on the shorting of the first element. This alarm set point would typically be 50–75% of the signal associated with one shorted element. For unbalance protection schemes with ambiguous indication, this alarm should seal in so that it shall be manually reset following the removal of the failed capacitor units from the bank. It would be undesirable to have the alarm turn off following the shorting of a subsequent element that cancels the unbalance signal.

The actual unbalance signal will depend upon the protection scheme employed for the bank. A wide variety of protection schemes are available for use on unfused shunt capacitor banks. The unbalance signals for the some of the more common connections are given in Figure 37 and Figure 38.

The time delay for tripping should be minimized in order to decrease the probability of case rupture or excessive damage in the event of an internal capacitor unit fault to the case or an arcing fault in the capacitor bank. Practical limitations on the minimum time include

a) To avoid tripping during a nearby system fault (for protection systems sensitive to unbalanced system voltages).
b) To avoid a bank that is operating in the alarm state from tripping on a system temporary overvoltage.
c) To account for the settling time of the protection system on initial energization and for the transient response of certain capacitor voltage transformers, etc., that may be a part of the unbalance protection system.

Normally a time delay of 0.01–0.05 s is adequate for this coordination. With this intentional time delay in the trip relay, the additional time required for the lockout relay and breaker operation may result in total clearing times of the order of 0.1 s for a capacitor unit with an internal fault or a capacitor bank with an

Copyright © 2000 IEEE. All rights reserved.
Copyright The Institute of Electrical and Electronics Engineers, Inc.
Provided by IHS under license with IEEE
No reproduction or networking permitted without license from IHS
Not for Resale

arcing fault. A time of 0.1 s is reasonably achievable to clear a capacitor bank with a problem, but still may result in substantial damage. Once parts of a capacitor bank start to become damaged, further damage will escalate rapidly. Such escalation will increase the risk of major damage and fire and may result in increased damage to the capacitor bank. Keeping the clearing time short is important in order to minimize damage when a fault occurs within a bank.

The timing of the alarm should be long enough to avoid operation during system faults or temporary overvoltages, but short enough in the case of ambiguous schemes to minimize the probability of two compensating fuse operations before the initiation of the alarm. Usually about a 10 s delay is appropriate for the alarm.

In managing the protection of an unfused capacitor bank, the unbalance protection should not be reset or "rebalanced" without first assuring that all capacitor units with failed elements have been removed from the bank and replaced with healthy capacitor units.

8.6.3 Introduction to capacitor bank unbalance calculations

The sample calculations in 8.6.4 provide the information required for setting the unbalance protection based on

a) Neutral-to-ground voltage for ungrounded wye banks.
b) Neutral current for ungrounded wye-wye banks.
c) Neutral voltage difference for ungrounded wye-wye banks.
d) Neutral-to-ground current for grounded wye banks.
e) Voltage across low-voltage capacitors at the neutral end of each phase or in the neutral-to-ground connection of grounded wye banks.
f) Difference in neutral-to-ground currents for grounded wye-wye banks.
g) Delta and single-phase bank protection based on schemes similar to a) through f).

The system of units used for most of these calculations assumes every normal non-zero voltage, capacitance, and current is 1 per unit under normal conditions, with no shorted elements.

In addition to providing the necessary information for protective relay settings, this type of tabulation gives a good feel for the performance of the bank with varying numbers of shorted elements. Some manufacturers of unfused capacitor banks will provide this type of tabulation for the banks they propose or supply.

It is, of course, possible to combine the calculations of the various columns and calculate only the voltage on the affected elements, the voltage on the affected unit (which is also the voltage on the parallel units), and the unbalance signal for the type of protection to be utilized. Because of the complexity of the configuration (for example, parallel elements and series groups in a capacitor unit, parallel capacitor units in a group, series groups in a string, and parallel capacitor units in a phase), the resulting equations become complex.

8.6.4 Unbalance calculations

Figure 37 and Figure 38 illustrate unbalance calculations for unfused capacitor banks when elements (element groups) are shorted in one capacitor unit. Figure 33(a) illustrates a capacitor unit with two out of eight elements (element groups) shorted. The principal equation for each column of Figure 37 and Figure 38 is given in Table 12 and Table 13.

The column headings in the tabulations are based on wye-connected three-phase capacitor banks. For delta-connected banks, the same formulae and tabulation(s) can be used by treating a leg of the delta as one phase of a grounded wye bank; all of the formulae are identical. For a delta bank, the currents shown as per-unit-

--`,,```,,,,````-`-`,,`,,`,`,,`---
Copyright © 2000 IEEE. All rights reserved.

Copyright The Institute of Electrical and Electronics Engineers, Inc.
Provided by IHS under license with IEEE
No reproduction or networking permitted without license from IHS
Not for Resale

of-phase current become per-unit-of-leg current (phase current divided by $\sqrt{3}$). The difference current (equal wyes) becomes the difference in current between two equal delta-connected legs.

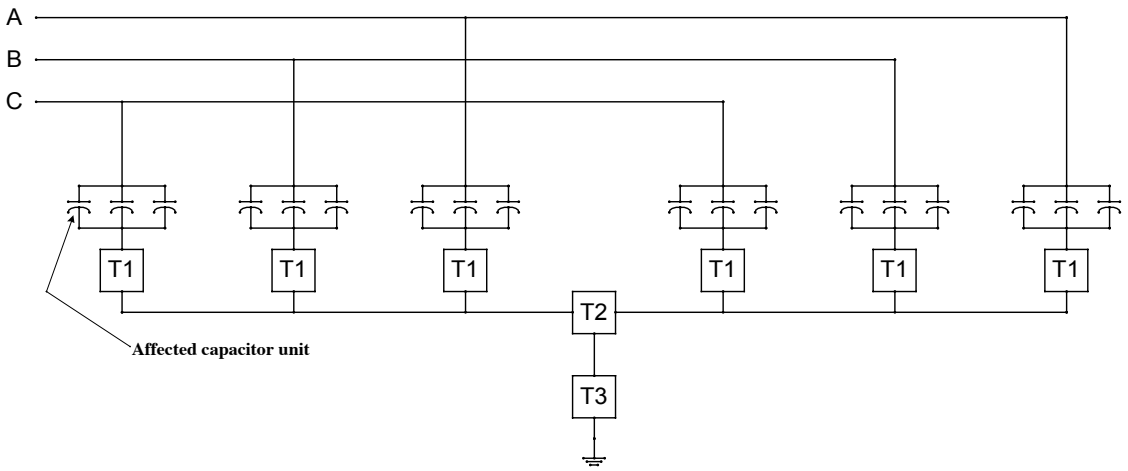

"S = 1 series groups,"
Pt = 6 parallel units per phase,
Pa = 3 parallel units per phase in left wye.

NOTE—T1, T2, and T3 are the appropriate low-voltage capacitors, current transformers, voltage transformers, etc., for the protection being used.

Figure 36—Unfused wye-wye capacitor bank

Unfused banks

(Values are per unit of normal value except as indicated. Calculations and notation based on wye connected banks.)

24-May-2000
08:02 AM
ufcpbk.wk4

Capacitor unit construction

Su= 10 Number of series groups in capacitor unit

Capacitor Bank Construction

S =	1	Series groups
Pt =	6	Parallel units per phase
Pa =	3	Parallel units per phase in "left" wye
G =	1	0 = "grounded", 1 = ungrounded wye *

Shorted element groups e	Capacitor unit per unit capacitance Cu	Parallel group per unit capacitance Cg	Affected wye capacitance Cs	Affected phase capacitance Cp	Neutral to ground voltage (per unit of Vlg) Vng	Voltage on affected phase Vln	Voltage on affected unit Vcu	**Voltage on affected elements Ve**	**Overvoltage on other units Vh**
0	1.000	1.000	1.000	1.000	0.0000	1.000	1.000	**1.000**	**1.000**
1	1.111	1.037	1.037	1.019	0.0061	0.994	0.994	**1.104**	**1.005**
2	1.250	1.083	1.083	1.042	0.0137	0.986	0.986	**1.233**	**1.012**
3	1.429	1.143	1.143	1.071	0.0233	0.977	0.977	**1.395**	**1.020**
4	1.667	1.222	1.222	1.111	0.0357	0.964	0.964	**1.607**	**1.031**
5	2.000	1.333	1.333	1.167	0.0526	0.947	0.947	**1.895**	**1.046**
6	2.500	1.500	1.500	1.250	0.0769	0.923	0.923	**2.308**	**1.067**
7	3.333	1.778	1.778	1.389	0.1148	0.885	0.885	**2.951**	**1.101**
8	5.000	2.333	2.333	1.667	0.1818	0.818	0.818	**4.091**	**1.161**
9	10.000	4.000	4.000	2.500	0.3333	0.667	0.667	**6.667**	**1.299**
10									
11									
12									

* use "grounded" for grounded wye, delta or single phase banks

Figure 37—Spreadsheet/tabulation illustrating unbalance calculations for an unfused capacitor bank (Figure 36)

Copyright © 2000 IEEE. All rights reserved.
Copyright The Institute of Electrical and Electronics Engineers, Inc.
Provided by IHS under license with IEEE
No reproduction or networking permitted without license from IHS
Not for Resale

Unbalance protection data

(Values are per unit of normal value except as indicated.)

24-May-2000
08:02 AM
ufcpbk.wk4

Capacitor unit construction
(Copied from "Unfused Banks")
Su = 10 Number of series groups in capacitor unit

Capacitor Bank Construction
(Copied from "Unfused Banks")

S =	1	Series groups
Pt =	6	Parallel units per phase
Pa =	3	Parallel units per phase in "left" wye
G =	1	0 = "grounded", 1 = ungrounded wye *

Shorted element groups e	Voltage on affected elements Ve	Overvoltage on other units Vh	Affected wye current Iy	Affected phase current Ip	Neutral to ground voltage (per unit of Vlg) Vng	Neutral to ground current Ig +	Neutral current between wyes In +	Difference current, equal wyes Id +
0	**1.000**	**1.000**	1.000	1.000	0.0000		0.0000	
1	**1.104**	**1.005**	1.031	1.012	0.0061	Calculates	0.0092	Calculates
2	**1.233**	**1.012**	1.068	1.027	0.0137	only for	0.0205	only for
3	**1.395**	**1.020**	1.116	1.047	0.0233	grounded	0.0349	grounded
4	**1.607**	**1.031**	1.179	1.071	0.0357	wye	0.0536	wye
5	**1.895**	**1.046**	1.263	1.105	0.0526		0.0789	
6	**2.308**	**1.067**	1.385	1.154	0.0769		0.1154	
7	**2.951**	**1.101**	1.574	1.230	0.1148		0.1721	
8	**4.091**	**1.161**	1.909	1.364	0.1818		0.2727	
9	**6.667**	**1.299**	2.667	1.667	0.3333		0.5000	
10								
11								
12								

* use "grounded" for grounded wye, delta or single phase banks
\+ Per unit of total phase current

Figure 38—Continuation of the spreadsheet/tabulation of Figure 37, giving information for setting unbalance protection

Table 12—Details for Figure 37

Column title	Formula and comment
Shorted element groups e	The number of elements (element groups) that have shorted inside one capacitor unit.
Capacitor unit per-unit capacitance Cu	$Cu = \frac{Su}{Su - e}$ The capacitance of the affected capacitor unit based on number of shorted elements.
Parallel group per-unit capacitance Cg	$Cg = \frac{Pa - 1 + Cu}{Pa}$ The capacitance of the group of capacitors that includes the affected unit. For all of the units in that group except the affected unit, the per-unit capacitance is 1. For the affected unit, the per-unit capacitance is Cu.
Affected wye capacitance Cs	$Cs = \frac{S \times Cg}{Cg(S - 1) + 1}$ The per-unit capacitance of the (phase of) the wye that includes the affected capacitor unit. For the series group including the affected unit, the per-unit capacitance is Cg. For all other series groups, the per-unit capacitance is 1.

Copyright © 2000 IEEE. All rights reserved.

Copyright The Institute of Electrical and Electronics Engineers, Inc.
Provided by IHS under license with IEEE
No reproduction or networking permitted without license from IHS
Not for Resale

Table 12—Details for Figure 37 (continued)

Column title	Formula and comment
Affected phase capacitance Cp	$CP = \frac{(Cs \times Pa) + Pt - Pa}{Pt}$ The per-unit capacitance of the phase (both wyes) that includes the affected unit. For this calculation, the capacitance of the affected wye is Cs. The capacitance of the other wye is 1 per unit.
Neutral-to-ground voltage (per unit of Vlg) Vng	$Vng = G\left(\frac{3}{2 + Cp} - 1\right)$ For grounded banks (G = 0), this voltage is always 0. For ungrounded wye banks, the calculation assumes the affected phase has a capacitance Cp and the other two phases each have a per-unit capacitance of 1. (It is convenient to develop this equation based on an instant in time when the affected phase has 1 per-unit voltage and the other two phases have –0.5 per-unit voltage. For this condition the two unaffected phases can be paralleled, and the voltage divider between –0.5 per unit and +1 per unit can be calculated for the midpoint voltage, which is recorded as Vng.)
Voltage on affected phase Vln	$Vln = 1 - Vng$ The voltage line to neutral across the phase that includes the affected unit. With unfused banks, the shorting of the elements increases the capacitance of that phase and decreases the voltage across the affected phase; therefore, the numbers are always less than 1.
Voltage on affected unit Vcu	$Vcu = \frac{Vln \times Cs}{Cg}$ The actual per-unit voltage on the affected capacitor unit, based on the capacitance division of the actual voltage on the affected phase (Vln).
Voltage on affected elements Ve	$Ve = Vcu \times Vg$ The actual per-unit voltage on the remaining elements in the affected capacitor unit, based on the actual voltage on the affected capacitor unit.
Highest voltage on other units Vh	The highest voltage on capacitor units in the bank. For multiple series groups, the capacitors are in the same phase and the per-unit voltage is $Vh = \frac{S - Vcu}{S - 1}$ For single series group banks, the overvoltage of interest is in the other two phases: $Vh = \sqrt{0.5^2 + (\sqrt{3} \div 2 + Vng)^2}$

The first four columns of Figure 38 are copied from Figure 37 to make those numbers easily available when considering the unbalance signals. Table 13 briefly discusses the remaining columns in Figure 38.

Table 13—Details for Figure 38

Column title	Formula and comment
Affected wye current Iy	$Iy = Cs \times Vln$ The per-unit current in the affected phase of the affected wye.
Affected phase current Ip	$Ip = Cp \times Vln$ The per-unit current in the affected phase of the bank.

Copyright © 2000 IEEE. All rights reserved.
Copyright The Institute of Electrical and Electronics Engineers, Inc.
Provided by IHS under license with IEEE
No reproduction or networking permitted without license from IHS
Not for Resale

Table 13—Details for Figure 38 (continued)

Column title	Formula and comment
Neutral-to-ground current Ig	$Ig = (1 - G)(1 - Ip)$ The neutral-to-ground current, which is used with protective relay schemes utilizing neutral-to-ground current, or the voltage across a low-voltage capacitor in the neutral or in each phase. The per-unit change in current to ground is the per-unit change in voltage across a low-voltage capacitor in the affected phase. It is also the per-unit change in voltage across a low-voltage capacitor in the neutral-to-ground connection because the other two phase currents do not change in a grounded bank.
Neutral current between wyes In	$In = \frac{3 \times Vng \times G}{2}$ The unbalance current for ungrounded wye-wye banks. [The current is calculated assuming the neutral-to-ground (zero sequence) voltage is applied at the neutral of the unaffected wye, which is half the of the bank.]
Difference current, equal wyes Id	$Id = Vln(Cp - 1)$ For grounded wye-wye banks where the difference in the neutral current between the two equal wyes is used as a basis for protection (see Figure 27.) Values are per unit of normal (total) phase current.

9. Protection of capacitor filter banks

9.1 Filter bank protection

Capacitor units in filter banks may require additional duties due to harmonic contents. In these applications, higher voltage capacitor ratings and fuse current ratings may be required. Generally, the additional overloading requirements on component parameters should compensate for higher peak voltages and the increased losses imposed on the reactors and resistor assemblies.

Figure 39 illustrates one possible primary protection scheme for a filter bank. A redundant protection scheme (not illustrated in the figure) may also be provided. The reactor and C_2 are tuned to the fundamental frequency to minimize the losses in R at the fundamental frequency in this example.

9.1.1 Overcurrent and overload protection

The overcurrent and overload relay in each phase of the filter bank serves two desired protective functions. Fast tripping is initiated for high-level short-circuits near the circuit breaker terminal. In case of low-magnitude overcurrents, properly coordinated, time-delayed alarm and tripping signals are initiated due to the abnormal condition on the filter bank. Special emphasis is given to the response of the overcurrent protection (50/51 relay) to harmonic current distortion for some types of solid state electronic relays based on peak current measurements. In effect, undesired filter bank tripping may occur from these relays as the electronic level detection is influenced by the harmonic phase angle relationships for low-order frequencies (second to fifth) along with the maximum current level detection of the relay.

Copyright © 2000 IEEE. All rights reserved.

Copyright The Institute of Electrical and Electronics Engineers, Inc.
Provided by IHS under license with IEEE
No reproduction or networking permitted without license from IHS
Not for Resale

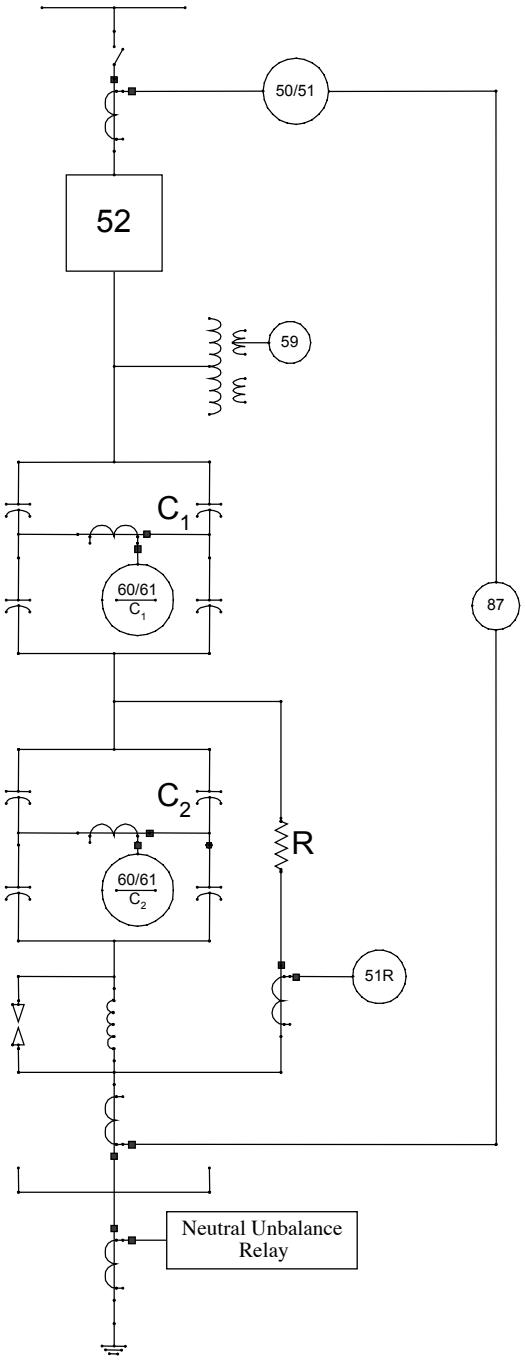

Figure 39—Sample protection scheme for a filter bank

Copyright © 2000 IEEE. All rights reserved.
Copyright The Institute of Electrical and Electronics Engineers, Inc.
Provided by IHS under license with IEEE
No reproduction or networking permitted without license from IHS
Not for Resale

Digital relays may be influenced by harmonic distortions if the predominant orders of harmonic oscillations are not predicted. The digital band-pass filter response provided in the relay may have a low attenuation factor at a given harmonic frequency and cause undesired tripping of the filter banks.

The expected reliability of the relay protection depends on the protection technology used, the design and manufacturing approaches, and the environment in which the relays are applied. To improve the availability of filter banks, appropriate data and experience related to harmonic distortion shall be considered in the selection of the protection scheme.

9.1.2 Ground overcurrent protection

The ground overcurrent relay is time-delayed and coordinated with other protections on the system to avoid undesired tripping for system earth faults and transient conditions. Both phase and ground overcurrent relays provide backup functions for a differential protection.

9.1.3 Resistor overload protection

The damping resistor in each phase of the filter bank is also protected against fundamental and harmonic overloads. This relay should respond to the true rms current flowing through the resistor. The setting should match the overload capability of the resistor.

9.1.4 Overvoltage protection

Each filter is protected by an overvoltage relay that serves to provide one of the following protection functions:

— Protect the filter bank against continuous system power frequency overvoltages. The protection is time-delayed and properly coordinated with the automatic overvoltage control provided for the power system.

— Protect the filter capacitors against severe overvoltages, which cause excessive stress on the units. Peak measurement relays are recommended and set according to the withstand capability of the capacitors as specified by the manufacturers. Overvoltage and overload protection can be provided from current integration methods to derive the true overvoltages imposed on the capacitor units.

9.1.5 Capacitor unbalance protection

Capacitor unbalance protection is covered in detail in Clause 8. The high-voltage C_1 and low-voltage C_2 capacitor banks of a typical filter are illustrated in Figure 40 and Figure 41 and are protected by separate unbalance protection schemes. However, many other unbalance protection schemes can be provided for filter banks depending on the arrangement of the capacitors and whether the system and bank unbalance compensation features are needed. For example, the capacitor unbalance scheme illustrated in Figure 40 is provided with an overall unbalance function based on the detection of the neutral voltage shift as a result of capacitor failures in the high- or low-voltage side of the filter bank. This scheme is also provided with an optional system voltage unbalance compensation feature to the relaying input. The protection relay should be set to detect C_1 or C_2 failures and trip the bank for the failed units in either capacitor bank.

Another unbalance protection scheme is illustrated in Figure 41. In this example, an unconventional capacitor unbalance scheme is provided by means of current measurements in the resistor branch as a result of capacitor failures. This unbalance protection scheme shall carefully evaluate the effect of system 60 Hz frequency deviation and capacitor deviation as a function of temperature ($\Delta C/\Delta T$). In this regard, the availability of the filter bank is considerably improved if compensation means are provided. If the protection is of the digital type, the response time of the numerical filter and the attenuation factor shall be known for proper coordination with the time delay setting imposed on the unbalance protection.

--`,,```,,,,````-`-`,,`,,`,`,,`---
Copyright © 2000 IEEE. All rights reserved.

Copyright The Institute of Electrical and Electronics Engineers, Inc.
Provided by IHS under license with IEEE
No reproduction or networking permitted without license from IHS
Not for Resale

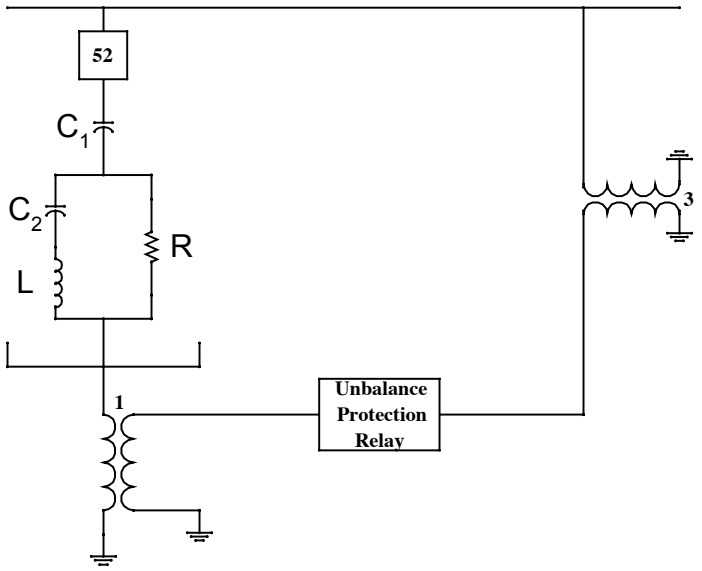

Figure 40—Neutral voltage unbalance scheme with compensation

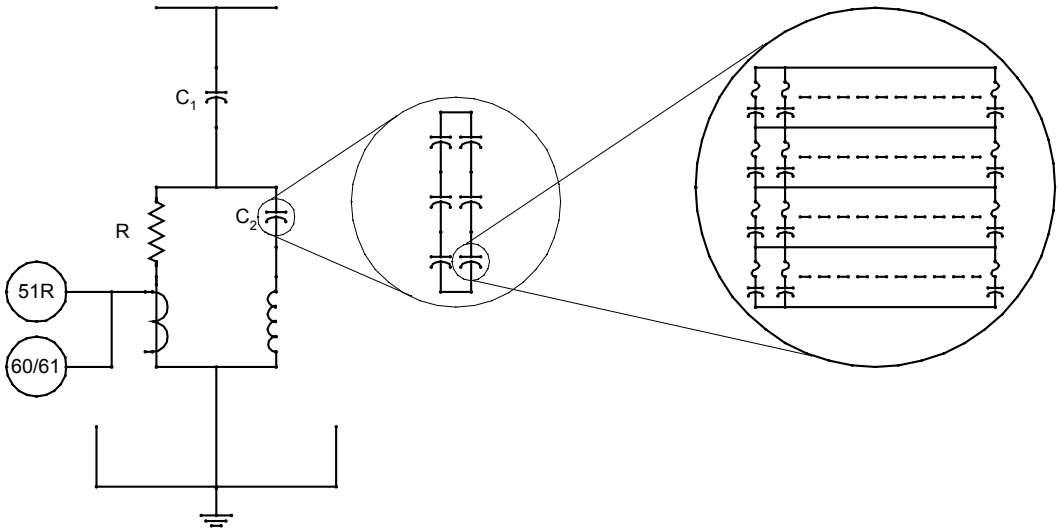

Figure 41—Filter bank capacitor unbalance provided in the resistor branch

9.2 Multifrequency harmonic filter protection considerations

Multifrequency filters are normally applied in applications like high-voltage dc converter station sites where two or more harmonics shall be shunted off the system. The high-voltage capacitor can be used for both frequencies. The low-voltage section is tuned so that more than one frequency can be shunted off the system. Standard protection may be applied to the high-voltage and low-voltage sections. Figure 42 illustrates a multifrequency filter circuit. Relay methods of protection are in the notes that follow.

Copyright © 2000 IEEE. All rights reserved.
Copyright The Institute of Electrical and Electronics Engineers, Inc.
Provided by IHS under license with IEEE
No reproduction or networking permitted without license from IHS
Not for Resale

NOTES:

1—Neutral unbalance protection may be used, but it is important to ensure that the relay has a narrow 60 Hz band-pass filter. There may be a high level of harmonics, which could cause false alarms and trips if the relay operates on anything other than the 60 Hz signal. The filter bank would be large and, therefore, should have a compensation circuit to handle system unbalance and the inherent unbalance of the bank. The protection will detect a shorted turn in the reactors as well as failed capacitor units.

2—The high-voltage capacitor bank can be protected using an H connection with a current transformer to measure the unbalance between the two legs. This protection is effective for the capacitor because it can be used for alarm and tripping and it also identifies the phase in trouble. The disadvantage is that it is only sensitive to problems in the capacitor bank. It will not react to a reactor fault or a fault in the low-voltage section. This protection may require that dual bushing capacitor units be provided so that the current through the two legs can be measured separately.

3—The low-voltage capacitor bank can also be protected using the H connection, and again two bushing capacitor units may be required. This protection will not detect a reactor shorted turn.

4—A voltage differential protection relay is not recommended for a multifrequency filter because the voltage is normally connected from the bus to neutral (ground). The low-voltage section makes it difficult to balance the two voltage sources because the voltage change will be different if a high-voltage capacitor unit fails as compared to a low-voltage capacitor unit. The voltage across a section of the high-voltage bank may be compared to the bus voltage, but a special voltage transformer would be required to handle the basic impulse level (BIL).

5—The low-voltage section may be protected by connecting voltage transformers across the low-voltage capacitor, summing the three voltages, and measuring only the 60 Hz. The relay can be balanced or nulled when the bank is energized. This protection is sensitive and can easily detect a low-voltage capacitor unit failure as well as a shorted turn in the low-voltage reactor. It can also detect a major impedance change in the high-voltage section. One advantage of this scheme is that only single-bushing capacitor units are required.

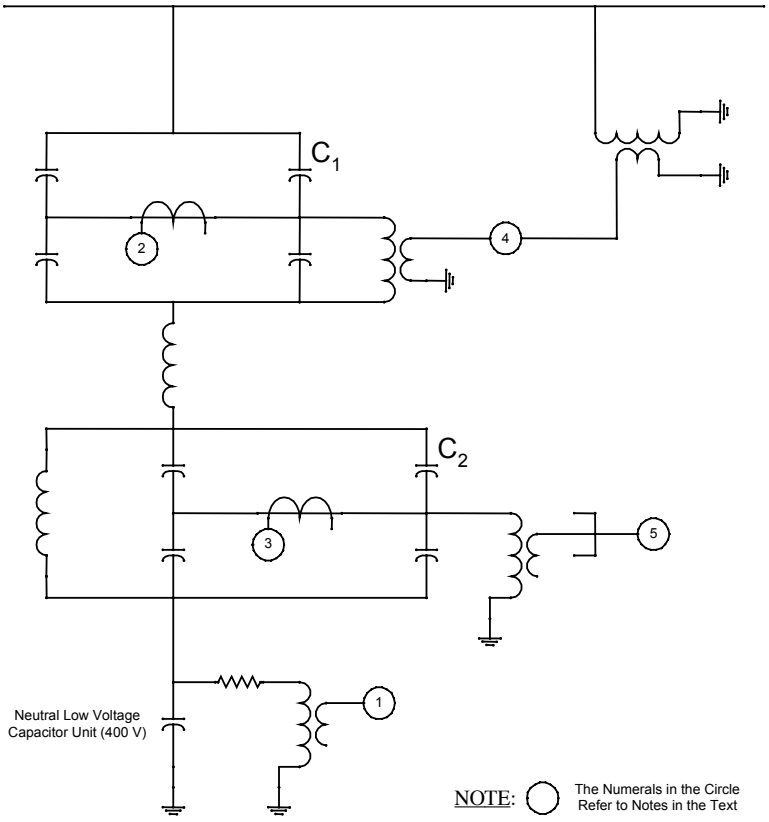

Figure 42—Multifrequency filter protection schemes

Copyright © 2000 IEEE. All rights reserved.

Copyright The Institute of Electrical and Electronics Engineers, Inc.
Provided by IHS under license with IEEE
No reproduction or networking permitted without license from IHS
Not for Resale

9.3 Static var compensator (SVC) capacitor protection

SVCs are used in strategic installations to rapidly compensate reactive power for maintaining an acceptable system voltage profile and for improving the overall stability of the power system. Voltage flickers are also reduced in industrial applications when SVCs and harmonic filters are provided. An example of an SVC installation is illustrated in Figure 43.

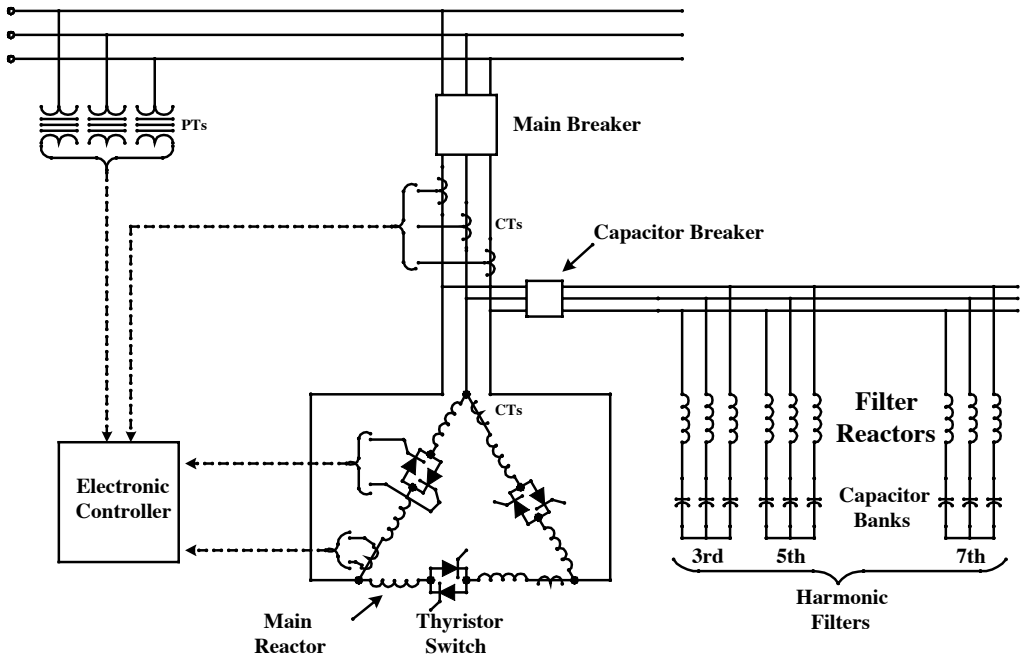

Figure 43—Typical SVC

Protection of SVCs is provided by a combination of conventional protective relays and protective functions contained in the SVC control system (IEEE Power System Relay Committee [B7]). These functions are made up of a number of zones to include the SVC step-down transformer, low-voltage buses, reactor branches, capacitor branches, filters, and thyristors.

This guide applies equally to the protection of the fixed or thyristor-switched capacitor (TSC) banks provided as an integral part of an SVC installation. In this regard, Clause 7 and Clause 8 describe various protection methods that can be applied by conventional relays to shunt capacitor banks along with additional methods illustrated in Figure 44 and Table 14.

Copyright © 2000 IEEE. All rights reserved.
Copyright The Institute of Electrical and Electronics Engineers, Inc.
Provided by IHS under license with IEEE
No reproduction or networking permitted without license from IHS
Not for Resale

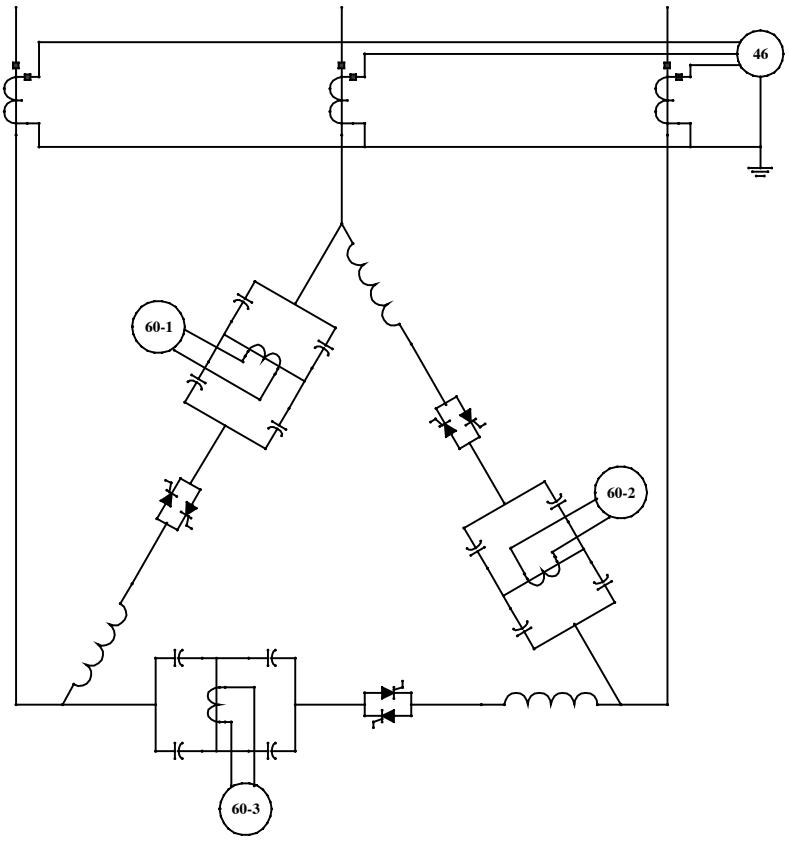

Figure 44—Capacitor unbalance protection in the TSC mode

Table 14—Suggested SVC protection methods

Protection zone	Protection device	Protection function	Notes
TSC	60 C	Unbalance	H-bridge unbalance measurement
TSC/TCR	50/51	Overcurrent	Branch faults of limiting reactor overloads
TCR	46	Negative phase sequence	Unbalance
TSC/TCR	60	Zero sequence phase unbalance	Unbalance in lieu of 46
TSC	59	Overload	Capacitor overvoltage using current measurement
TSC/TCR	50 N	Ground overcurrent	Branch faults

Copyright © 2000 IEEE. All rights reserved.

Copyright The Institute of Electrical and Electronics Engineers, Inc.
Provided by IHS under license with IEEE
No reproduction or networking permitted without license from IHS
Not for Resale

SVC capacitor banks in the TSC mode are provided with air-core reactors connected in series to limit the inrush generated from thyristor switching. The selection and setting of the overcurrent protection should consider a misfire in the TSC valve (accounting for the magnitude and time duration of inrush and outrush currents) and should coordinate with other protective functions provided in the controls.

Harmonics are an important factor to consider in the protection of capacitors in the TSC mode. Adequate overcurrent and overvoltage protection types and settings shall be provided to counter the effect of harmonics generated by the thyristor-controlled reactors (TCRs) and by other unusual harmonic distortion such as those resulting from geomagnetic disturbances (Benmouyal et al. [B3]). In this regard, true rms-based overcurrent relays are required to adequately protect the series limiting reactors against overloads while peak-measuring voltage relays should be provided for the protection of capacitors against overvoltages (see Table 1).

9.4 SVC filter protection

Harmonics are produced by the switching elements of SVCs, which may require harmonic filtering.

For instance, a six-pulse phase-controlled reactor unit employs three TCRs connected in delta. Odd harmonics (for example, fifth, seventh, eleventh, and thirteenth) will be injected into the power system during balanced steady-state conditions.

If filters are required, the effectiveness of such filtering depends mainly on the system impedance normally referred to by a R-X locus, which may determine the need for additional single- or double-tuned shunt filters. These filters will operate as an equivalent shunt capacitor bank generating reactive power at system frequency.

Filter banks include a number of protective zones covered by different relay types and protection schemes. A representative list of one filter bank protective functions includes

— Differential protection
— Phase and ground overcurrent protection
— Overvoltage protection
— Capacitor unbalance protection
— Overload protection

Some of the protection methods discussed in Clause 7 and Clause 8 are applicable to SVC filter bank protection. However, as noted in 9.1 and 9.2, the unbalance protection can be more demanding, depending on the filter configuration (single-frequency tuned or multifrequency tuned) and the system voltage to which the harmonic filters are connected. See 9.1 and 9.2 for more detailed discussion of filter bank protection.

10. Capacitor bank equipment considerations

10.1 Capacitor bank switching devices

Capacitor switching devices require special attention because more severe switching duties exist for the interruption of shunt capacitor banks than for other forms of switching. The various devices that may be used for capacitor switching include the following:

Reference should be made to IEEE Std C37.04-1979, ANSI C37.06-1997, IEEE Std C37.012-1979, and ANSI C37.66-1969 for rating and application information.

Copyright © 2000 IEEE. All rights reserved.
Copyright The Institute of Electrical and Electronics Engineers, Inc.
Provided by IHS under license with IEEE
No reproduction or networking permitted without license from IHS
Not for Resale

Circuit breakers	Circuit switcher	Interrupter switches
SF_6 Vacuum Oil Air-magnetic Air	SF_6	Oil SF_6 Vacuum Thyristor

All capacitor switching devices should be applied within their maximum voltage, frequency, and current ratings, including transient inrush current and frequency.

The current rating of the switching device should include the effects of system overvoltage (≤110%), capacitor-unit capacitance tolerance (≤115%), and system harmonics (≤110%) to provide adequate margins for most capacitor switching duties.

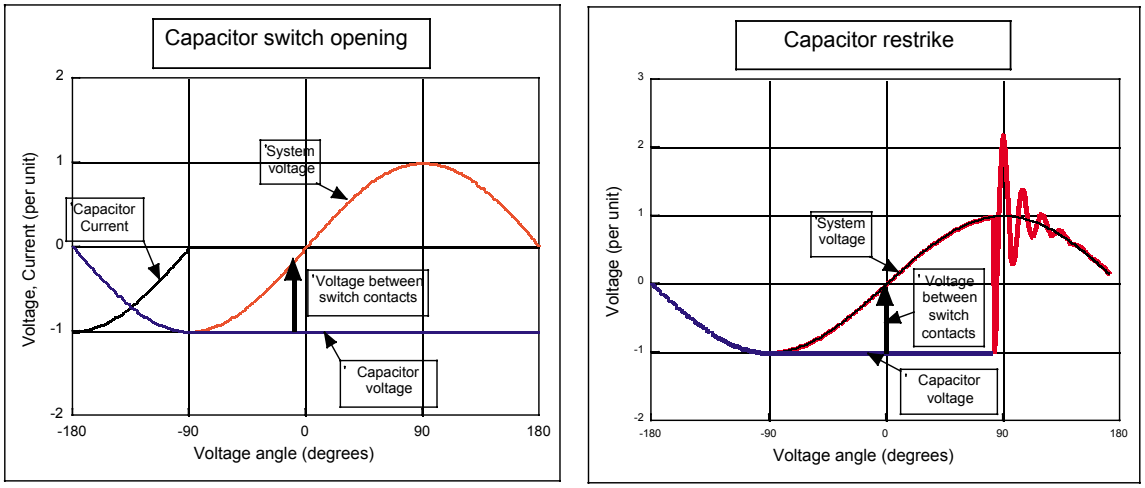

(a) No restrike (b) One restrike

Figure 45—Opening the circuit to a single-phase capacitor in one step

An important consideration involving application of circuit breakers or circuit switchers for capacitor switching is the transient overvoltage that may be generated by restrikes during the opening operation. At current zero, the capacitor is left charged to nearly full-peak line voltage. Little recovery voltage appears across the switching device contacts at this instant, and the capacitance-current arc is usually interrupted at the first current zero after the switching device contacts open. After interruption, the normal frequency alternation of the voltage on the source side of the switching device results in a recovery voltage across the open contacts, 0.5 cycle later, approaching twice the peak line voltage [see Figure 45(a)]. If a breakdown were to occur at 90° in Figure 45(b), the capacitor voltage immediately attempts to equalize with the system voltage. The circuit is oscillatory. At the first peak of the transient, the capacitor voltage will, depending on damping, overshoot by an amount approaching the difference between the two voltages immediately prior to the restrike. This high transient overvoltage may damage equipment. If the current is interrupted at the first high-frequency current zero, the transient voltage peak is trapped on the capacitor bank. The recovery voltage reaches a value greater than that following the first interruption. However, the contacts have moved farther apart, and the buildup of dielectric strength may prevent additional restrikes.

If the gap between the open contacts breaks down less than 0.25 cycle after a current zero, the amplitude of the voltage oscillation will not exceed the normal transient voltage that occurs when the bank is first energized. This breakdown is defined as a reignition rather than a restrike.

Copyright © 2000 IEEE. All rights reserved.

Copyright The Institute of Electrical and Electronics Engineers, Inc.
Provided by IHS under license with IEEE
No reproduction or networking permitted without license from IHS
Not for Resale

In Figure 45 (b), the restrike is shown to occur a full 0.5 cycle after current interruption. This condition is the worst possibility for the first restrike because the recovery voltage has reached its maximum and the resultant surge voltage can, theoretically, reach three times normal line-to-ground crest voltage. In actual practice, it seldom exceeds 2.5 times normal. Additional restrikes can produce higher crest voltages, and the sudden voltage changes and high-frequency oscillations may produce other relatively higher voltages elsewhere on the system. Therefore, in order to protect the entire system, it is desirable to limit restrikes and the voltage phenomena resulting from them.

Under special circuit arrangements, it may be possible for some switching devices to interrupt the transient current caused by a prestrike when energizing a capacitor bank. Overvoltages may result when the contacts close following an interruption of the transient current, the resulting transient can produce overvoltages.

In a station where large capacitor banks are connected to a common bus, it may be prudent to verify that the transient capacitor discharge current into a nearby fault does not exceed the capability of any circuit breakers or circuit switchers connected to the bus.

The peak discharge current of an individual capacitor bank is

$$I_{pk} = \frac{\sqrt{2}}{\sqrt{3}} \times 10^3 \times kV_{LL} \sqrt{\frac{C_B}{L_s}} = \sqrt{\frac{1000}{3 \times \pi \times f}} \times \sqrt{\frac{kvar(3\phi)}{L_s}}$$

where

I_{pk} is peak discharge current (A),
C_B is capacitance (F),
L_S is total inductance, capacitor bank to fault, (H),
kV_{LL} is line-to-line voltage (kV),
f is power frequency (Hz).

For a 60 Hz system, the peak discharge current is

$$I_{pk} \approx 1.33 \sqrt{\frac{kvar(3\phi)}{L_s}}$$

In addition to involving the contact capability, the transient inrush current through a switching device may also cause secondary flashover of bushing current transformers (BCTs). The voltage developed in the secondary circuit is proportional to the frequency and magnitude of the transient inrush current:

$$\text{BCT secondary voltage (crest)} = \frac{\text{transient current (crest)}}{\text{BCT ratio}} \times \text{current transformer burden reactance (at system frequency)} \times \frac{\text{transient frequency}}{\text{system frequency}}$$

NOTE—The current transformer burden reactance is the sum of the reactances of the current transformer, the leads, and the relay.

The switching equipment manufacturer should be consulted if the dI/dt or crest values of the inrush current exceed the limits specified in Table 1A through Table 3A of ANSI C37.06-1997.

Copyright © 2000 IEEE. All rights reserved.
Copyright The Institute of Electrical and Electronics Engineers, Inc.
Provided by IHS under license with IEEE
No reproduction or networking permitted without license from IHS
Not for Resale

10.2 Inrush control devices

Energizing a capacitor bank will result in a transient inrush current. The magnitude and frequency of this inrush current are a function of the applied voltage (point on the voltage wave at closing), the capacitance of the circuit, the inductance of the circuit, the initial charge of the capacitor bank at the instant of closing, and the damping of the circuit due to closing resistors or other resistance in the circuit. See Annex D for inrush current calculations.

The transient inrush current to a single isolated bank is less than the available short-circuit current at the capacitor location. Because a switching device should meet the momentary current requirement of the system, transient inrush current is not a limiting factor in applying switching devices on isolated capacitor banks. However, it is important to check the momentary rating of other switching devices not intended for fault current interruption.

When capacitor banks are switched back to back (that is, one or more energized when another is connected to the same bus), transient currents of high magnitude and high-frequency may flow between the banks on closing of the switching device or in the event of a restrike on opening. The oscillatory current is limited only by the impedance of the capacitor banks and the circuit between them. The transient current usually decays to zero in a fraction of a cycle of the power frequency. The component supplied by the power source is usually so small it may be neglected.

The magnitude of inrush current and its subsequent effects to a switched capacitor bank may be greatly reduced by use of inrush-current-limiting reactors. A capacitor switching device furnished with preinsertion resistors or inductors or a switch that uses zero-crossing controls minimizes the switching inrush transient, but does not help the outrush transient for close in faults. When used for daily switching of back-to-back capacitor banks, the life of the switching device contacts can be extended by increasing the inductance between banks by adding in current-limiting reactors. The reactors will also reduce the outrush currents (see IEEE Std C57.16-1996).

The phenomenon of inrush to a single switched shunt capacitor bank and to a bank switched back to back with a parallel energized bank or banks is discussed in 6.1. In a given application, the currents and voltages associated with inrush to a capacitor bank may precipitate undesirable resonant effects with other parts of the system, induce hazardous surges in station control cable, and interfere with communication facilities in the area.

Closing resistors or inductors on the bank switching device, or current-limiting reactors installed in series with a switched capacitor bank, will serve to alter the frequency of the inrush transients and reduce the magnitude of the transients. The reactors applied should have a sufficiently high BIL rating so that gaps or surge arresters required for reactor protection will not short out the reactors during energization of the capacitor bank. Synchronous or zero voltage closing of the switched bank can also reduce the severity of the switching transients (see 6.1).

In back-to-back switching applications, the addition of even a minimal amount of inductance between banks will significantly reduce the magnitude of inrush currents flowing from the energized bank(s) to the bank being energized.

Grounded wye shunt capacitor banks (as well as other substation equipment capable of generating or transmitting high-frequency transients to the ground mat) should be installed as far away as practical from the control building and cable trenches.

Copyright © 2000 IEEE. All rights reserved.

Copyright The Institute of Electrical and Electronics Engineers, Inc.
Provided by IHS under license with IEEE
No reproduction or networking permitted without license from IHS
Not for Resale

10.3 Surge arresters

Lightning surges and the switching of capacitors can result in significant system overvoltages. In regions where the lightning activity is high or in applications where the capacitor bank is switched many times daily, surge arresters may be applied at the capacitor bank to limit these transient overvoltages. The ability of the surge arrester to dissipate energy that results during capacitor switching operations is of particular importance to assure proper surge arrester selection. Restrikes of the capacitor bank switching device generally cause the highest transient overvoltages, particularly for isolated banks. Significant transient overvoltages can also occur at the capacitor bank due to surge magnification of resonant circuits on the power system associated with switching of a remote capacitor bank, cable, or transmission line. Metal-oxide surge arresters are generally better than silicon-carbide surge arresters because they usually have a higher energy duty for the same arrester rating and typically absorb less energy per transient event.

Refer to the surge arrester application guides IEEE Std C62.2-1987 (for gap silicon carbide surge arresters) and IEEE Std C62.22-1997 (for metal oxide surge arresters) for further information on surge arrester application.

10.4 Voltage-sensing devices

If a voltage transformer, capacitor-coupled voltage transformer, or potential device connected from the bank neutral to ground is used for unbalance detection, it should be capable of withstanding switching surge voltages of 0.5–2.5 times system phase-to-neutral voltage without malfunction (Harner and Owen [B6]). At higher system voltages, higher ratio voltage transformers are required. The use of these higher ratio voltage transformers can make the neutral voltage unbalance detection methods become insensitive. Special relaying techniques may be required (see Clause 8).

10.5 Current-sensing devices

A reasonably conservative voltage rating for the neutral current transformer to withstand the surge voltages appearing at the bank neutral is 0.2 times the system line-to-ground voltage (Harder [B5]). However, current transformers rated 0.1 of system voltage have been applied without trouble. On small banks, these current transformers are often wound primary types with low ratios. During switching, the bank neutral transient voltage rise can stress the insulation across the current transformers wound primary. It can also stress the insulation between the case (which is usually grounded to a local support structure) and the secondary winding due to the fact that the secondary neutral is usually grounded at the remote end (that is, at the relay location) for safety reasons. Although the voltage stress between the grounded case and the secondary winding could be eliminated by grounding the secondary circuit at the current transformer location, this alternative is not recommended. To do so would impress the bank transient potential rise on the secondary cable and present hazardous voltages at the relay location. Generally, the secondary winding can withstand these short duration transients without difficulty. Also, coupling of this transient voltage to the secondary cable can be greatly reduced by routing the cable closely parallel to the primary ground conductor down to the ground mat and then closely paralleling the ground mat conductors en route to the relay location. In special instances where excessive neutral transient voltages are encountered, it may be necessary to insulate the transformer case from the local ground to allow connection of one side of the secondary winding to the transformer case. This approach will eliminate the stress between the secondary winding and the core and will increase the stress between the primary winding and the core. However, the primary insulation can generally be expected to be more robust than the secondary insulation.

To protect the primary winding insulation of a wound primary current transformer, it is common practice to install a rod gap of 1.2–1.6 mm connected directly across the primary terminals (Harder [B5]). This arrangement will limit the voltage impressed across the winding and prevent primary turn-to-turn breakdown. A high-energy gas-filled protector tube or low-voltage surge arrester (varistor) should be connected across the

Copyright © 2000 IEEE. All rights reserved.
Copyright The Institute of Electrical and Electronics Engineers, Inc.
Provided by IHS under license with IEEE
No reproduction or networking permitted without license from IHS
Not for Resale

secondary terminals to protect the secondary winding from turn-to-turn breakdown. (Failure of an inadequately rated varistor is likely to short-circuit the current transformer and cause the unbalance protection to be inoperative.) This device should be insulated from local ground, again to avoid impressing the bank transient potential on the secondary circuit. The surge arrester should be chosen to limit the current transformer secondary voltage to coordinate with the secondary circuit insulation voltage rating.

Nonsimultaneous making and breaking times of the three poles of the capacitor bank switching device may allow full phase current to flow in the neutral current transformer and relay during the switching time. This current can flow for an indefinitely long period of time if one or two poles of the bank switching device fail to operate. For this reason, it may be desirable to select a neutral current transformer that can accommodate this current without damage or malfunction. For more information on surge protection of current transformers, see 10.6.1.

10.6 Transient currents

It is well documented that the switching of capacitive currents produces transients that are markedly different from those produced by other power system switching operations (Greenwood [B4]). For capacitor bank switching, the differences are as follows:

a) Highly damped, nonoscillatory, transient-current pulses may be produced when preinsertion resistors are employed in the bank switching device. Peak currents range from 1000–3000 A. The rise time is about 1 μs, and the fall time is about 600 μs. Initial dI/dt is about 3000 A/μs.

b) When the main contacts of the capacitor bank switching device close, shorting the preinsertion resistor, oscillatory transient currents may be produced that have a frequency of 1000–20 000 Hz, peak current of 1000–2500 A, and a subsequent dI/dt of about 100 A/μs.

c) If resistor preinsertion is not employed, the transient may be oscillatory at frequencies in the range of 1000 Hz to 20 000 Hz and the initial dI/dt will be about the same as with resistor preinsertion: 1000 A/μs. However, the peak current will be much greater. A typical value is 25 000 A crest. Similar transient current components can be superimposed on 60 Hz fault current waveforms for faults in the bank, for bus faults in the station, and for close-in line faults.

d) If preinsertion inductors are utilized, peak transient currents are generally less than 3000 A. The oscillatory frequency is on the order of several hundred hertz. The maximum dI/dt is, therefore, less than 10 A/μs.

   One source (Abdulrahim et al. [B1]) has pointed out that additional very high-frequency switching transients of several megahertz (due to traveling waves on the capacitor bank bus) will also be produced and superimposed on the transients already described. This transient is similar, if not identical, to the transients generated by switching a length of high-voltage bus with a disconnect switch.

The rate of change of the current (dI/dt) is a useful indicator of the potential for inducing interference in nearby control circuits. Although switching with preinsertion resistors reduces the peak current and eliminates the oscillation, it does not reduce the initial dI/dt. This rate of change is determined only by the voltage across the switch before closing and the circuit-loop inductance:

$$dI/dt = V/L$$

Surge protection techniques for capacitor bank applications should take into consideration the different character of the transient currents produced during bank switching (higher peak currents and lower oscillation frequencies) than are experienced with other power system switching operations.

The circulating paths of the transient currents are also important. These currents flow in the capacitor bank buses, bank ground connections, and capacitor bank ground grid. For some conditions, the currents also flow in the bus interconnections between the main switching station and the capacitor bank, as well as in the main

Copyright © 2000 IEEE. All rights reserved.

Copyright The Institute of Electrical and Electronics Engineers, Inc.
Provided by IHS under license with IEEE
No reproduction or networking permitted without license from IHS
Not for Resale

station buses and ground grid. Due to the combination of high current and high-frequency, significant transient potential differences can appear across portions of the ground grid due to the grid inductance. The currents are also accompanied by strong high-frequency magnetic fields. Therefore, control cables in these areas are prone to inductive interference and require careful attention to routing, shielding, and grounding.

10.6.1 Surge protection for current transformers

When the transient currents produced during capacitor bank switching pass through the primary of the current transformer, its secondary circuit can experience a large transverse-mode interference voltage. It is not induced through stray coupling, but rather by the normal transformer action of the current transformer. This can present a serious problem for both the current transformer and the equipment and instruments that make up its secondary burden, such as protective relays and data transducers. The reactance of the burden components at these frequencies can be over 100 times their 60 Hz values. As a consequence, high-frequency transient currents, which can be a few hundred amperes, can produce extremely high voltages across inductive burdens.

The suggestion is sometimes made that current transformer saturation will prevent the production of such high secondary voltages. This suggestion is not true for this situation, however. The secondary volt-second product for each half cycle of the high-frequency oscillation is small compared to that required to produce current transformer core saturation at 60 Hz. Therefore, voltage limiting by current transformer saturation is not likely to occur.

Overvoltage protection of the current transformer secondary circuit is thus required to prevent damage to the current transformer winding and the connected burdens. This protection usually takes the form of high-current-rated varistors or spark gaps connected directly across the current transformer secondary terminals. If the current transformer has a wound primary, a gap or a surge arrester may also be needed across the primary (Harder [B5]). Varistors applied to the secondary should be selected with a sufficient energy-absorbing rating to withstand the secondary current oscillations (see 10.5). Also, to maintain voltage-limiting action, the varistor size should be selected so that the peak current does not drive it deep into the voltage turn-up region on the varistor's V/I curve. Figure 46 illustrates this point. Manufacturers of varistors can supply V/I characteristic curves suitable for checking this condition.

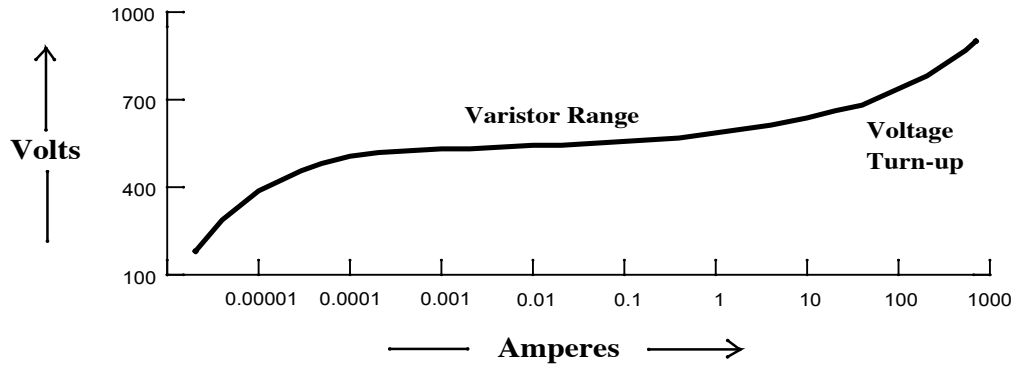

Figure 46—Varistor V/I curve showing voltage turn-up

To a degree, the secondary high-voltage problem can be minimized by selecting the current transformer ratio and burden to reduce the level of the secondary current. Also, eliminating inductive components in the secondary burden will reduce the secondary voltage. Solid state relays are particularly beneficial in this respect because their current burdens are low and essentially resistive.

Copyright © 2000 IEEE. All rights reserved.
Copyright The Institute of Electrical and Electronics Engineers, Inc.
Provided by IHS under license with IEEE
No reproduction or networking permitted without license from IHS
Not for Resale

The foregoing discussion is best illustrated by a numerical example. Figure 47 shows a one-line diagram for a 230 kV station with a shunt capacitor bank. The bank is rated 40 000 kvar and is wye-connected with a grounded neutral. In the figure, the line circuit breakers have 1200/5 ratio current transformers, and the capacitor bank is in service when a phase to ground fault occurs on line 3 just outside the station. The distance along the 230 kV circuit from the capacitor bank to the fault is about 150 m.

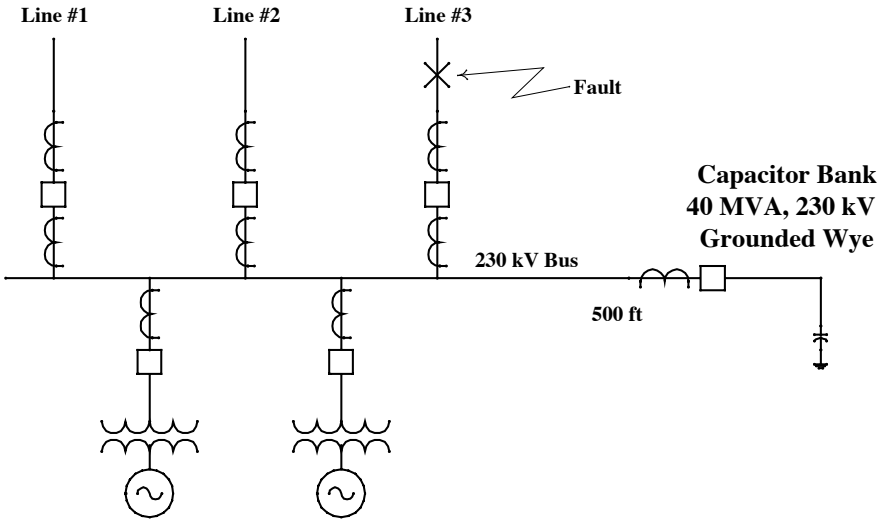

Figure 47—One-line diagram of 230 kV station with a shunt capacitor bank

Upon occurrence of the fault, the capacitor bank discharges through the bus-ground loop inductance, which is about 350 μH. Because there is little resistance in the loop, the current is oscillatory. The frequency of the oscillation depends on the loop inductance and the bank capacitance. The capacitance of the bank can be found from its voltage rating and its power frequency kilovar rating. For this 60 Hz example, the bank capacitance (C_B) is

$$C_B = 2.65 \times \text{kvar} \times \left(\frac{\sqrt{3}}{\text{kV}_{LL}10^3}\right)^2 \times 10^6$$

$$C_B = 2.65 \times \left(\frac{40\,000}{3}\right)^2 \times \left(\frac{\sqrt{3}}{230\ 10^3}\right)^2 \times 10^6$$

$$C_B = 2.0\ \mu\text{F}$$

The frequency of oscillation (f) is

$$f = \frac{10^6}{2\pi\sqrt{L_s \times C_B}}$$

$$f = \frac{10^6}{2\pi\sqrt{350 \times 2.0}}$$

$$f = 6105\ \text{Hz}$$

Copyright © 2000 IEEE. All rights reserved.

Copyright The Institute of Electrical and Electronics Engineers, Inc.
Provided by IHS under license with IEEE
No reproduction or networking permitted without license from IHS
Not for Resale

The peak current is

$$i_{max} = \frac{\sqrt{2}}{\sqrt{3}} \times 10^3 \times kV_{LL} \sqrt{\frac{C_B}{L_s}}$$

$$i_{max} = \frac{\sqrt{2}}{\sqrt{3}} \times 10^3 \times 230 \sqrt{\frac{2.0}{350}}$$

The peak secondary current is

$$i_{max} = (\text{secondary}) = 14\,196 / (1200:5)$$

$$= 59.1 \text{ A @ } 6015 \text{ Hz}$$

The current transformer secondary burden impedance, at 60 Hz, is $1 + j1\ \Omega$. At 6015 Hz, the burden impedance is about $1 + j100\ \Omega$. The peak magnitude of the oscillatory voltage transient across the secondary of the current transformer is then

$$V_{max} = \sqrt{[59.1(1)]^2 + [59.1(100)]^2}$$

$$= 5910 \text{ V @ } 6015 \text{ Hz}$$

This voltage is too much to allow across the relay and instrument burdens or the current transformer secondary winding insulation. Some means to clamp or limit the voltage to a lower amount is required, such as a spark gap or high-current varistor. Protective relays operating from these current transformers or from the bank-tie current transformers should also have a filter to exclude the 6 kHz discharge current calculated previously or be designed to ignore its presence.

The peak voltage, peak current and frequency produced in a given installation will vary somewhat from this example depending on the bank capacitance, current transformer ratios, system voltage, and burden impedance.

10.6.2 Surge protection of voltage transformers, capacitor-coupled voltage transformers, and resistance potential devices

Voltage signal sources of various types are used in capacitor bank protection schemes to detect abnormal conditions in the bank. Because they are located close to the capacitor bank, these devices can be directly exposed to the transients or surges produced during capacitor bank switching. Surge protection of these devices is mainly to prevent overstress in the primary-to-secondary insulation and the secondary-to-ground (case) insulation by the transient ground potential differences produced in the bank area during switching.

A peninsula grounding arrangement for the capacitor bank (along with proper control cable shielding, grounding, and routing) provides better surge protection for ac voltage signal sources than the single-point grounding scheme. The higher cost of peninsular grounding may be justified for large EHV capacitor bank installations.

With the single-point grounding arrangement, the bank neutral transient potential will be about 0.25 that on the capacitor bank bus (20 kV to 60 kV or higher). In this case, a voltage transformer connected to measure the capacitor bank voltage, bus to neutral, would need to be a two-bushing design so the case could be safely grounded to the station ground grid (refer to 6.2).

Copyright © 2000 IEEE. All rights reserved.
Copyright The Institute of Electrical and Electronics Engineers, Inc.
Provided by IHS under license with IEEE
No reproduction or networking permitted without license from IHS
Not for Resale

Use of a single-bushing transformer, with the case (primary ground) connected to the bank neutral, would impress the neutral transient voltage between the case and the secondary winding, which is grounded through the control cable at the relay location. Failure of the secondary winding insulation would be a strong possibility. Figure 48 and Figure 49 illustrate the situation.

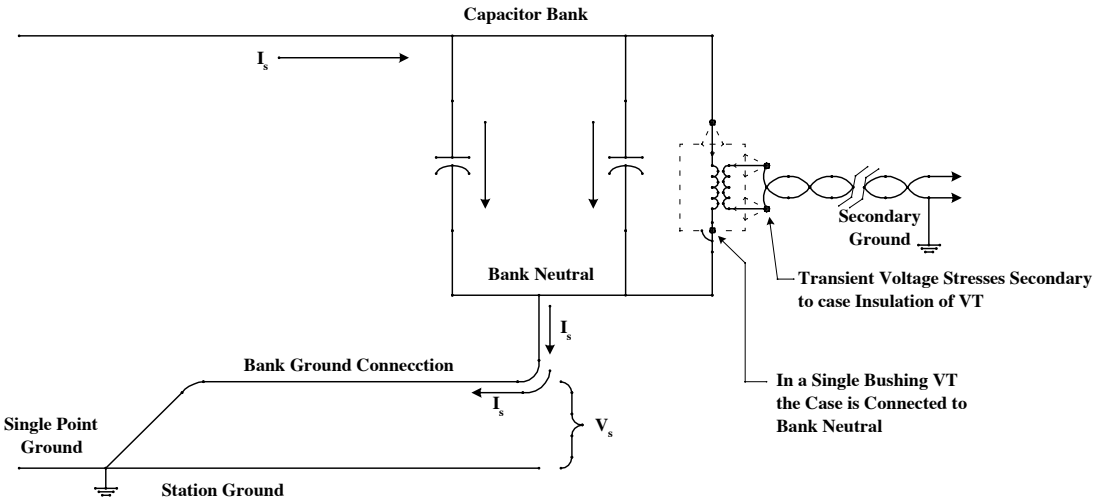

Figure 48—Single-point grounded bank with single-bushing voltage transformer

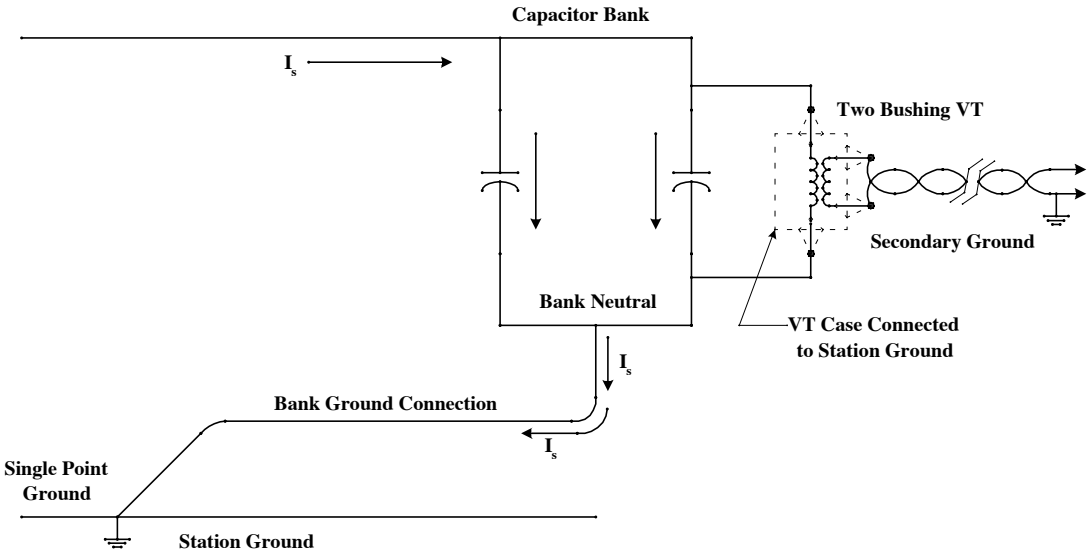

Figure 49—Single-point grounded bank with two-bushing voltage transformer

Copyright © 2000 IEEE. All rights reserved.

Copyright The Institute of Electrical and Electronics Engineers, Inc.
Provided by IHS under license with IEEE
No reproduction or networking permitted without license from IHS
Not for Resale

Conventional high-voltage and EHV magnetic voltage transformers often have primary winding self-resonant frequencies in the range of 500 Hz to 2000 Hz. If the bank switching frequency coincides with this self resonance, the capacitor bank transient may be strongly amplified in the voltage transformer output voltage. There is probably little risk of damage to the voltage transformer, but the operation of relays and controls connected to the voltage transformer may be adversely affected. A resistor in series or parallel with the secondary of the transformer can be used to dampen the oscillation. The resistor value should be such that it does not influence the signal level to the relay.

Finally, all types of voltage transducers, voltage transformers, capacitor-coupled voltage transformers, and resistance potential devices can, with some loss in fidelity, reproduce the capacitor bank switching transient voltage. It will appear in the transverse mode at the output terminals of the device. This voltage, too, may affect the operation of relay systems.

10.6.3 Surge protection of relay systems associated with capacitor banks

It has already been mentioned that capacitor bank switching produces the same megahertz transients that occur in other high-voltage switching operations, as well as its characteristic high-energy kilohertz transients. Protective relay systems for capacitor bank applications should have incorporated in their design surge protection that is effective for both types of interference.

Experience has shown that interference in control circuits caused by high-voltage switching operations is always stronger in the common mode than in the transverse mode. Surge protection techniques have been directed mostly toward reducing the common mode. Some of these techniques (such as control cable routing, cable shielding and grounding, and isolation), which are highly effective at megahertz frequencies, are also effective against the kilohertz common mode interference due to capacitor bank switching and are, therefore, recommended for such installations.

On the other hand, the surge filters [for example, passive electromagnetic interference (EMI) filters] used in the inputs to relay systems, although highly effective at megahertz frequencies, are ineffective against capacitor bank switching transients in the kilohertz frequency range. Passive kilohertz surge filters for relay input circuits would require much larger inductors and capacitors, which could present severe loading problems for current transformers and voltage transformers. Such filters are often not practical.

In capacitor bank switching, the kilohertz interference in the secondary circuits is strongest in the transverse mode because, as already described, it is coupled to the secondary circuits of current transformers and voltage transformers by the normal transformer action of these devices. Because it is not practical to use passive kilohertz filters in the current transformer and voltage transformer secondary ac relay input circuits, the required filtering action should be achieved by other means. One approach is to design active filters as an integral part of the relay analog signal processing circuits.

Finally, all ac input connections to the relay system should be protected against overvoltages by using varistors or spark gaps.

10.7 Control cables

All control cable duct runs, cable trenches, or direct buried control cables not specifically associated with capacitor controls or protection should be removed from the immediate area around the capacitor bank. This step is to avoid induction of surges into relaying systems or possible control cable failure during capacitor bank switching.

The routing of control cables from neutral current transformers or voltage transformers should be kept at right angles with respect to the common neutral for single-point grounding and in parallel with the tie to the substation ground for peninsular grounding to minimize induction. These induced voltages can also be

Copyright © 2000 IEEE. All rights reserved.
Copyright The Institute of Electrical and Electronics Engineers, Inc.
Provided by IHS under license with IEEE
No reproduction or networking permitted without license from IHS
Not for Resale

minimized by shielding the cables and using a radial configuration for circuits (circuits completely contained within one cable so that inductive loops are not formed).

Control cables entering the capacitor bank area should be kept as close as possible to the ground grid conductors (that is, 4/0 copper minimum) in the cable trench, or on top of the duct run, or in contact with the ground grid conductor if direct buried. This grounding arrangement is mandatory if a peninsula ground is used. Multiple control cable shield grounds are recommended: one at the cable termination in the capacitor area, another where the cable enters the main cable trench or duct run, and another where the cable enters the control house, or at the final termination on the relay panel. All spare or unused conductors of control cables should be grounded at least at one end.

The induced voltages [common mode (between a signal pair and ground) and transverse mode (between the signal wires)] will be affected by the cable construction (for example, shielded twisted pairs or random lay without shielding) and by whether the shields and unused conductors are grounded. The outer shield should normally be grounded at both ends to reduce the common and transverse induced voltage.

If the spare conductors and internal shields are grounded at both ends, the induced common mode voltage will be reduced; but the induced transverse mode voltage can be increased due to the current flow through the spare conductors coupling to the other cable conductors.

11. System considerations

11.1 Resonance

A shunt capacitor bank forms a resonant circuit with system inductive elements. The resonant frequency may be generated while switching a remote capacitor bank and give rise to excessive voltages and currents and the possible failure of equipment such as other capacitors, surge arresters, instrument transformers, and fuses. These undesirable resonant effects are more likely to occur if the capacitor bank switching device has long arcing time and multiple restrike characteristics.

11.2 Harmonics

The capacitor bank may also resonate with harmonic currents produced elsewhere, such as remote loads. The use of thyristors in industry to derive variable potential dc from an ac source is extensive and growing. Such phase-controlled thyristors generate harmonics, particularly third, fifth, seventh, and eleventh. More instances of parallel resonance are occurring due to this cause. Some examples of harmonic series resonance with utilities, due to adjacent utility loads, have been noted. These resonant circuits also include utility distribution circuits with capacitors that supply medium-voltage industrial and commercial loads. In most instances, some form of harmonic voltage and high-harmonic capacitor currents are involved. Capacitors rated for higher voltage may be used (Steepes and Stratford [B14]; Miller [B10]; McCauley et al. [B8]).

Arc furnaces, in the melt part of their cycle, produce a similar array of troublesome harmonics, including even-ordered harmonics. While the large furnaces are connected to stiff high-voltage sources, small installations on distribution circuits nevertheless produce the same effect.

11.3 Telephone interference

Another objection to harmonics in the power system is the noise interference produced in communications circuits. Voice frequency noise interference comes primarily from the residual or zero sequence currents that are odd multiples of the third (the ninth and fifteenth harmonic of the fundamental frequency). Grounded capacitor banks provide a low impedance path for these currents to flow.

Copyright © 2000 IEEE. All rights reserved.

Copyright The Institute of Electrical and Electronics Engineers, Inc.
Provided by IHS under license with IEEE
No reproduction or networking permitted without license from IHS
Not for Resale

The measure of the capability of a power circuit to act as a noise source is the telephone influence factor (TIF) (see IEEE Std 469-1988). Before attempting to apply corrective measures to a capacitor bank that is suspected of causing interference, it would be well to locate the source of the noise. The best corrective measures are usually applied at the source. If corrections should be made at the capacitor bank, modifications to change the resonant frequency can be made.

12. Commissioning, operation, and maintenance

12.1 Preparation for initial energizing

Before energizing power equipment, there are the usual precommissioning checks for instrument transformer ratio, polarity, and excitation; circuit dielectric withstand; proper operation of protective devices; and visual verification of proper connections and clearances, clean insulators, etc. The nameplate information and wiring should be checked to verify that the construction is correct and agrees with the construction drawings. Test trip and verify the logic of the schemes. In addition, some recommended checks specific to capacitors are addressed in 12.1.1 through 12.1.6.

12.1.1 Visual and switching device inspection

Inspect all fuses for proper connections and clearance. The bank switching device and ground switch (if used) should be checked for proper operation. Capacitor unit nameplates should be checked for the correct voltage for the desired number of units in series (fuseless design) or units in series groups with parallel capacitor units per series group. Secondary circuits should be checked for proper grounding of cable shields and spare control wires (see 10.7). Spare control wires should be grounded as necessary.

12.1.2 Capacitance testing

In fused and unfused designs, the capacitance of each capacitor unit may be checked to verify that it is within specified tolerance. Usually, the capacitor manufacturer will maintain capacitor tolerances to within ±2% of each other within a given bank. For fuseless designs, measuring and comparing the capacitance of each series string of units is adequate.

12.1.3 Relay protection testing

All relaying associated with the capacitor installation should be checked for proper operation. Where possible this step should be done by putting the appropriate signal on the sensing device and checking for appropriate operation of the relays, circuit breakers, etc.

The unbalance relay installation that detects the change in capacitance should be calibrated to verify both proper pickup current and proper time delay. (Excessive time delay in the trip operation can result in severe damage to the capacitor bank and associated equipment.) The lockout and trip operation should also be checked.

Backup or redundant overcurrent relays should be tested to verify proper pickup current and time delay. The settings used should be compared with the desired values that have been calculated.

--`,,```,,,,````-`-`,,`,,`,`,,`---

Copyright © 2000 IEEE. All rights reserved.
Copyright The Institute of Electrical and Electronics Engineers, Inc.
Provided by IHS under license with IEEE
No reproduction or networking permitted without license from IHS
Not for Resale

12.1.4 Special recording

An oscillograph or portable recorder can assist in diagnosing problems associated with initial energization of a large capacitor bank. The following parameters should be recorded:

— All three phase currents.
— All three phase voltages (if voltages are available).
— Capacitor bank neutral current (or voltage).
— The outputs of the capacitor bank sensing devices.

A calibration trace should be run on each channel used.

12.1.5 Initial energization

Verify that all relaying systems are operational prior to energizing the capacitor bank. The oscillographic equipment should be started immediately before the circuit breaker, circuit switcher, or equivalent switching device is closed. If the relay protection operates to trip immediately after initial closing, the following procedure should be initiated:

a) Perform the procedures of 12.2.1 through 12.2.4.
b) If no problem is found with the capacitor bank or relay installation, review the setting of the relay that tripped with the oscillographic data and revise the setting, if appropriate.
c) If the sensitive unbalance relay is operating on the inherent unbalance of the capacitor bank, it may be necessary to raise its setting until the capacitor bank remains energized to properly adjust the relay.

With the bank energized, it may be necessary to calibrate the protection equipment with actual system voltages and currents applied, especially if compensation for inherent unbalance is involved. Secondary currents from the current transformers should be recorded along with phase angles to verify that the installation is correct and to provide for future reference.

12.1.6 Additional tests (optional)

After the capacitor bank has been energized and all protection has been properly adjusted, the alarm level (if used) and the lockout operation may be checked. Depending upon the bank construction, it may be possible to check for proper trip and alarm performance in operation by removing or adding appropriate capacitors in the bank. Modify the bank to create an alarm situation. Measure the unbalance and verify that the level measured is close to the expected value. The alarm should pick up. Verify operation of any remote displays, if used.

Modify the bank to create a trip situation. Energize the bank. Modifying units from different groups or series strings instead of all from one group or string tests the unbalance protection and produces less stress on the remaining units. Verify proper relay targets and remote displays, if used.

12.2 Response to alarm or lockout (trip)

12.2.1 Oscillographic records

If available, review oscillographic records to determine the magnitude of the unbalance current or voltage and on the phase.

Copyright © 2000 IEEE. All rights reserved.

Copyright The Institute of Electrical and Electronics Engineers, Inc.
Provided by IHS under license with IEEE
No reproduction or networking permitted without license from IHS
Not for Resale

12.2.2 Inspection (after de-energization)

Immediately inspect the bank for blown fuses (if applicable), possible flashover damage, and obvious capacitor unit failures.

12.2.3 Testing

In externally fused banks, test capacitors that are not obviously defective, but have blown fuses. In cases where a large number of the capacitor units in the bank have blown fuses (for example, 25% or more), it is advisable to test all capacitor units and verify fuse ratings. Measure the capacitance in other types of banks. Measure the series strings in the fuseless design and the individual capacitor units in the internally and unfused designs.

12.2.4 Capacitor unit removal and replacement

Replace the defective capacitor units and/or fuses. When capacitors are arranged in parallel, units can be removed or relocated from other phases in order to rebalance the series-parallel groups for capacitance and voltage. Relocation of capacitor units and changes to the bank configuration may require a change in the unbalance relay settings.

12.2.5 Returning bank to service after lockout

If only a few capacitor units have been replaced, the bank can be returned to service with a minimum of readjustment of the unbalance relay. These adjustments can be performed after the bank is energized.

If a large number of the capacitor units have been replaced, attention may have to be given to recalibration of the sensitive protection after the bank is re-energized. Refer to 12.1.5.

Additional tests, as noted in 12.1.6, may be performed in order to verify the protection scheme.

12.2.6 Servicing bank following alarm condition

When system conditions permit, the bank should be taken out of service to replace defective capacitor units and/or capacitor fuses. If replacement capacitor units are not available, for some bank designs, it may be possible to rebalance the bank by disabling corresponding units from all phases. Such rebalancing, or other changes to the bank configuration, may require a change in unbalance relay settings.

--`,,```,,,,````-`-`,,`,,`,`,,`---

Copyright © 2000 IEEE. All rights reserved.
Copyright The Institute of Electrical and Electronics Engineers, Inc.
Provided by IHS under license with IEEE
No reproduction or networking permitted without license from IHS
Not for Resale

Annex A

(informative)

Symbol definitions

Cg	is per-unit capacitance of the affected parallel group of capacitor units.
Chn	is capacitance from H leg or tap point to neutral or reference end of a capacitor bank.
Ci	is per-unit capacitance of the affected group in an internally fused capacitor unit.
Cp	is per-unit capacitance of the phase (leg if the bank is delta-connected) with the affected capacitor unit(s).
Cs	is per-unit capacitance of a string (or leg) of capacitor units with affected capacitor unit(s).
Cst	is capacitance of a string of capacitor units with shorted elements.
Ctn	is capacitance from tap to neutral or reference end for a tapped capacitor bank.
Cy	is per-unit capacitance of the parallel strings in the phase of the wye with affected elements.
Cu	is per-unit capacitance of a capacitor unit.
ΔC	is per-unit variation of capacitance between phases.
dVtg	is change in tap voltage, per unit of normal tap voltage.
ΔV_{LG}	is variation of V_{LG} between phases, per unit.
e	is number of shorted elements in a string of capacitor elements.
E	is total number of series elements in a string of capacitor elements.
f	is number of blown fuses (eliminated elements) in one group of an internally fused capacitor unit.
f	is variance of phase angle between two phases from 120°.
G	is grounding of bank: 0 = grounded, 1 = ungrounded.
Id	is difference in neutral-to-ground current between two equal grounded wye banks.
Ig	is neutral-to-ground current for a grounded wye bank.
Ih	is current through the H leg (current transformer) of an H-bridge.
In	is neutral current between wyes for wye-wye banks, per unit of normal total phase current.
Iph	is current in affected phase, per unit of normal phase current.
Ist	is current in affected string, per unit of normal string current.
Iu	is current in the affected capacitor unit.
Iy	is current in affected phase of the affected wye.
N	is number of parallel elements in one group of an internally fused capacitor unit.
n	is number of external fuses blown in one series group.
P	is number of parallel capacitors per series group (in the affected group of units).
Pa	is parallel units on the left (affected) wye or side of H.
Pb	is parallel units on the right (unaffected) wye or side of H.
Pt	is total parallel units in a bank (Pt = Pa + Pb).
S	is number of series groups in a bank (phase-to-neutral for wye-connected banks and phase-to-phase for delta-connected banks).
Sl	is parallel strings in the left wye.
Sp	is the total number of parallel strings of units in one phase (leg) of a fuseless capacitor bank.
St	is number of series groups, sensing tap to ground or reference end for tapped banks and sensing H leg to ground or reference end for H-bridge banks.
Su	is number of series groups of capacitor elements in a capacitor unit.
Vcu	is voltage across capacitor units in affected series group (per unit of normal voltage).
Ve	is voltage across affected elements in an internally fused capacitor unit (per unit of normal voltage).
Vg	is voltage across affected elements in an internally fused capacitor unit due to unbalance within the unit (per unit of actual unit operating voltage).

--`,,```,,,,````-`-`,,`,,`,`,,`---
Copyright © 2000 IEEE. All rights reserved.

Copyright The Institute of Electrical and Electronics Engineers, Inc.
Provided by IHS under license with IEEE
No reproduction or networking permitted without license from IHS
Not for Resale

Vh	is highest voltage on other units in the bank when this is higher than the voltage on the parallel units Vcu or in the same string Ve.
Vhn	is voltage of H leg of H-bridge.
V_{LG} or Vlg	is line-to-ground voltage (use maximum value where appropriate).
Vln	is line-to-neutral voltage of affected phase, per unit of normal line to neutral voltage.
V_{NG} or Vng	is neutral-to-ground voltage or per unit of normal line to ground voltage.
V_{NN} or Vnn	is voltage between neutrals.
V_{TG} or Vtg	is voltage between intermediate tap point and ground.

Copyright © 2000 IEEE. All rights reserved.
Copyright The Institute of Electrical and Electronics Engineers, Inc.
Provided by IHS under license with IEEE
No reproduction or networking permitted without license from IHS
Not for Resale

Annex B

(informative)

Bibliography

[B1] Abdulrahim, M. J., Anderson, P. M., and Fouad, A. A., "Inrush Currents in a Switched Parallel-Capacitor Bank," *IEEE Conference Paper CP 66-101*.

[B2] Alexander, R. W., "Synchronous Closing Control for Shunt Capacitors," *IEEE Transactions on Power Apparatus and Systems*, vol. PAS-104, no. 9, pp. 2619–2626, Sept. 1985.

[B3] Benmouyal, G., Bilodeau, H., Chano, S. R., and Sybille, G., "New Algorithm for Protection of Capacitor Banks Exposed to Harmonic Overvoltages," *IEEE Transactions on Power Delivery*, vol. 8, no. 3, pp. 898–904, July 1993.

[B4] Greenwood, A. N., Kurtz, D. R., and Sofianek, J. C., "A Guide to the Application of Vacuum Circuit Breakers," *IEEE Transactions on Power Apparatus and Systems*, vol. PAS 90, pp. 1589–1597, July/Aug. 1971.

[B5] Harder, J. E., "Selection and Protection of Current Transformers for Use in Shunt Capacitor Banks," *IEEE Transactions on Power Apparatus and Systems*, vol. PAS-95, abstract A 76 335-0, pp. 1760 (1A10), Nov./Dec. 1976.

[B6] Harner, R. H., and Owen, R. E., "Neutral Displacement of Ungrounded Capacitor Banks During Switching," *IEEE Transactions on Power Apparatus and Systems*, vol. PAS-90, pp. 1631–1638, July/Aug. 1971.

[B7] IEEE Power System Relaying Committee, "Static VAR Compensator Protection," *IEEE Transactions on Power Delivery*, vol. 10, no. 3, pp. 1224–1233, July 1995.

[B8] McCauley, T. M., Pelfrey, D. L., Roettger, W. C., and Wood, C. E., "The Impact of Shunt Capacitor Installations on Power Circuit Breaker Application," *IEEE Transactions on Power Apparatus and Systems*, vol. PAS-99, no. 6, pp. 2210–2222, Nov./Dec. 1980.

[B9] Mendis, S. R., Bishop, M. T., McCall, J. C., and Hurst, W. M., "Overcurrent Protection of Capacitors Applied on Industrial Distribution Systems," *IEEE Transactions on Industry Applications*, vol. 29, no. 3, May/June 1993.

[B10] Miller, D. F., "Application Guide for Shunt Capacitors on Industrial Distribution Systems at Medium Voltage Levels," *IEEE Transactions on Industry Applications*, vol. IA-12, no. 5, pp. 444–459, Sept./Oct. 1976.

[B11] NEMA CP1-1988, Shunt Capacitors.

[B12] Rogers, E. J., and Gillies, D. A., "Shunt Capacitor Switching EMI Voltages, Their Reduction in Bonneville Power Administration Substations," *IEEE Transactions on Power Apparatus and Systems*, vol. PAS-93, pp. 1849–1860, Nov./Dec. 1974.

[B13] Sheppard, N. R., and Schultz, N. R., "Some Considerations in the Protection of High-Voltage Capacitor Banks," *AIEE Transactions on Power Apparatus and Systems*, vol. 75, part III, pp. 686–694, Aug. 1956.

Copyright © 2000 IEEE. All rights reserved.

Copyright The Institute of Electrical and Electronics Engineers, Inc.
Provided by IHS under license with IEEE
No reproduction or networking permitted without license from IHS
Not for Resale

[B14] Steepes, D. E., and Stratford, R. P., "Reactive Compensation and Harmonic Suppression for Industrial Power Systems Using Thyristor Converters," *IEEE Transactions on Industry Applications*, vol. IA-12, no. 3, pp. 232–254, May/June 1976.

[B15] Tom, M. O., "A Static Voltage Differential Relay for Protection of Shunt Capacitors," *AIEE Transactions on Power Apparatus and Systems*, vol. 80, part III, pp. 1086–1088, Feb. 1961.

--`,,```,,,,````-`-`,,`,,`,`,,`---

Copyright © 2000 IEEE. All rights reserved.
Copyright The Institute of Electrical and Electronics Engineers, Inc.
Provided by IHS under license with IEEE
No reproduction or networking permitted without license from IHS
Not for Resale

Annex C

(informative)

Equations for effect of inherent unbalances

Table C.1 is intended as *a rule of thumb* for determining the effect of inherent unbalances on the displacement of various bank protection schemes.

Table C.1—Effect of inherent unbalance on displacement signal

Shunt capacitor bank configuration	Effect of capacitor manufacturing tolerance	Effect of system voltage magnitude changes	Effect of system voltage phase angle change
Grounded wye with neutral current sensing	$I_N = \frac{\Delta C \times var_B}{3V_{LG}}$	$I_N = \frac{(\Delta V_{LG})P \times var_U}{S(V_C)^2}$	$I_N = \frac{2P \times V_{LG}\left(\sin\frac{\Phi}{2}\right) var_U}{S \times V_C}$
Ungrounded wye with neutral potential sensing	$V_{NG} = \frac{\Delta C \times V_{LG}}{3}$	$V_{NG} = \frac{\Delta V_{LG}}{3}$	$V_{NG} = \frac{2}{3}\left(\sin\frac{\Phi}{2}\right)V_{LG}$
Ungrounded double wye with neutral differential current sensing	$I_N = \frac{\Delta C \times var_B}{6V_{LG}}$	$I_N = 0$	$I_N = 0$
Ungrounded double wye with neutral differential potential sensing	$\Delta V_{NN} = \frac{\Delta C \times V_{LG}}{3}$	$\Delta V_{NN} = 0$	$\Delta V_{NN} = 0$
Grounded wye with differential potential sensing	$\Delta V_{TG} = \Delta C(V_{LG})\left[\frac{S_T}{S^2}(S - S_T)\right]$	$\Delta V_{TG} = 0$	$\Delta V_{TG} = 0$

I_N is neutral current,
ΔC is per-unit variation of capacitance between phases,
var_B is capacitor bank reactive power rating,
var_U is individual capacitor-unit reactive power rating,
V_C is rated capacitor voltage,
Φ is variance of phase angle between two phases from 120°,
ΔV_{TG} is per-unit variation of the voltage between the intermediate tap point and ground.

NOTE—See Annex A for other symbols.

Copyright © 2000 IEEE. All rights reserved.

Copyright The Institute of Electrical and Electronics Engineers, Inc.
Provided by IHS under license with IEEE
No reproduction or networking permitted without license from IHS
Not for Resale

Annex D

(informative)

Inrush current and frequency for switching capacitor banks

D.1 Energizing an isolated bank with no previous charge

$$i_{max}(A) = \sqrt{2 \times I_{sc} \times I_1} \text{ or}$$

$$i_{max}(A) = \frac{\sqrt{2}}{\sqrt{3}} \times kV_{LL} \times 10^3 \sqrt{\frac{C_B}{L_s}} \text{ or}$$

$$i_{max}(A) = 10^3 \times \sqrt{\frac{1000}{3 \times \pi \times f_s}} \times \sqrt{\frac{kvar}{L_s}}$$

$$f(Hz) = f_s \sqrt{\frac{I_{sc}}{I_1}} = \frac{10^6}{2\pi \sqrt{L_s \times C_B}}$$

D.2 Energizing a bank with another on the same bus with no charge on the bank being switched

$$i_{max}(kA) = \sqrt{\frac{10^3}{3 \times \pi \times f_s}} \times \sqrt{\frac{kvar_1 \times kvar_2}{L_{eq} \times kvar_T}}$$

$$f(kHz) = 9.5 \times \sqrt{\frac{f_s \times kV_{LL}(I_1 + I_2)}{L_{eq} \times (I_1 \times I_2)}}$$

where

C_B	is bank capacitance (μF),
L_S	is system inductance (μH),
f_S	is system frequency (Hz),
L_{eq}	is total equivalent inductance per phase between capacitor banks (μH),
I_1	is load current of capacitor bank being switched (A),
kV_{LL}	is line-to-line voltage (kV),
$kvar_1$	is 3 ϕ kVA of capacitor bank being switched,
I_2	is load current of capacitor bank already energized (A),
$kvar_2$	is 3 ϕ kVA of capacitor bank already energized,
i_{max}	is peak current without damping (actual value about 90%),
k var_T	is $kvar_1 + kvar_2$,
I_{SC}	is symmetrical rms short-circuit current (A).

NOTE—Above expressions for inrush current apply only for energizing uncharged capacitors. If capacitors are charged, as during a restrike across an interrupting switch, the inrush current may be twice these values.

Copyright © 2000 IEEE. All rights reserved.
Copyright The Institute of Electrical and Electronics Engineers, Inc.
Provided by IHS under license with IEEE
No reproduction or networking permitted without license from IHS
Not for Resale

D.3 Typical values of inductance between capacitor banks

See IEEE Std C37.012-1979.

Rated maximum voltage (kV)	Inductance per phase of bus (μH/ft)	Typical capacitor bank inductance (μH)
15.5 and below	0.214	5
38.0	0.238	5
48.3	0.256	10
72.5	0.256	10
121.0	0.261	10
145.0	0.261	10
169.0	0.268	10
242.0	0.268	10

Copyright © 2000 IEEE. All rights reserved.

Copyright The Institute of Electrical and Electronics Engineers, Inc.
Provided by IHS under license with IEEE
No reproduction or networking permitted without license from IHS
Not for Resale